Building Mechanical Operation & Maintenance Manual

for the Iqaluit Wastewater Treatment Plant

Iqaluit, Nunavut

Expected Year of Completion: 2020

Original Scope: Design and upgrade existing Wastewater Treatment Plant to meet current and future demands.

This manual has been updated to include:

Date	Description of Change
2019-Mar-01	First Draft – Primary Treatment
2019-Dec 6	Second Draft – Primary Treatment, Secondary Treatment and Solids Handling.
2020-Apr-24	Final Compiled Manual

CHAPTER 1

TABLE OF CONTENTS

1. INTRODUCTION 1.1
1.1 USE OF THE MANUAL 1.1
1.2 PROJECT TEAM 1.2

CHAPTER 2 ..... 1.1

2. INDEX 2.1

CHAPTER 3 2-1

3. BACKGROUND AND DESIGN DATA 3-1
3.1 BACKGROUND 3-1
3.1.1 Prior Facilities 3-1
3.2 FACILITY MECHANICAL SYSTEM ADDITION AND UPGRADES 3-2
3.2.1 Heating 3-3
3.2.2 Ventilation 3-4
3.2.3 Plumbing 3-6
3.2.4 Fire Protection 3-8

CHAPTER 4 ..... 3.1

4. SCHEMATICS AND FUNCTIONAL DATA 4.1
4.1 GENERAL 4.1
4.2 HEATING SYSTEMS 4.1
4.2.1 Heating Plant 4.1
4.2.2 Heating Systems – Terminal Heating 4.4
4.2.3 Heating Systems – Air Handling Units & Heat Exchangers 4.5
4.3 VENTILATION SYSTEMS 4.7
4.3.1 Ventilation System - AHU-2 (Non-Classified Areas) 4.7
4.3.2 Ventilation System - AHU-3 (Headworks) 4.9
4.3.3 Ventilation System - HRV-1 (Office, Lab, and Washroom) 4.11
4.3.4 Ventilation System - Cooling Systems 4.12
4.4 DOMESTIC WATER SYSTEMS 4.14
4.5 NON-POTABLE WATER (NPW) FOR PROCESS USES 4.19
4.6 SANITARY SYSTEMS 4.20
4.7 PLUMBING FIXTURES 4.21
4.8 FIRE PROTECTION 4.22
4.9 FUEL OIL SYSTEM 4.22

CHAPTER 5 ..... 4.1

5. COMPONENT DETAILS 5.1

5.1 GENERAL OVERVIEW 5.1
5.2 HEATING SYSTEMS 5.1
5.2.1 Heating Plant 5.1
5.2.2 Heating Systems – Terminal Heating 5.4
5.2.3 Heating Systems – Air Handling Units & Heat Exchangers 5.4
5.3 VENTILATION SYSTEMS 5.6
5.3.1 Ventilation System - AHU-2 (Non-Classified Areas) 5.6
5.3.2 Ventilation System - AHU-3 (Headworks) 5.8
5.3.3 Ventilation System - HRV-1 (Office, Lab, and Washroom) 5.10
5.3.4 Ventilation System - Cooling Systems 5.11
5.4 DOMESTIC WATER SYSTEMS 5.13
5.5 NON-POTABLE WATER (NPW) FOR PROCESS USES 5.15
5.6 SANITARY SYSTEMS 5.16
5.7 PLUMBING FIXTURES 5.17
5.8 FIRE PROTECTION 5.17
5.9 FUEL OIL SYSTEM 5.18

CHAPTER 6 ..... 5.1

6. OPERATING PROCEDURES 6.1
6.1 GENERAL 6.1
6.2 BUILDING HVAC CONTROL SYSTEM 6.1

CHAPTER 7 ..... 6.1

7. MAINTENANCE PROCEDURES AND SERVICE INFORMATION 7.1
7.1 GENERAL 7.1
7.1.1 Keep It Clean 7.1
7.1.2 Keep It Tight 7.1
7.1.3 Renewal Parts 7.1
7.1.4 Parts and Equipment Ordering Procedure 7.2
7.1.5 Scheduled Preventive Maintenance Program 7.2
7.1.6 Maintenance Legend 7.3
7.2 GENERAL MAINTENANCE 7.4
7.3 MAINTENANCE SCHEDULE 7.5
7.4 MAINTENANCE MANUALS 7.5
7.5 SPARE PARTS LIST 7.5

CHAPTER 8 ..... 7.1

8. TESTING AND CERTIFICATION 8.1

CHAPTER 9 ..... 8.1

9. CONTACT SERVICE INFORMATION 9.1

CHAPTER 1

1. INTRODUCTION

1.1 USE OF THE MANUAL

This manual has been prepared to provide operation and maintenance personnel with a clear and concise understanding of how the Wastewater Treatment Facility operates and the steps which must be followed to keep the facility running safely and efficiently.

The primary goal of this manual and of all personnel operating in and around the Wastewater Treatment Facility is the prevention of personnel injury, fire losses and property damage. To meet this goal, the operation and maintenance program includes:

- Emergency procedures to be followed in the event of spills or accidents.
- Specific operating instructions to be learned and followed at all times to promote safe and efficient operation.
- Routine maintenance of all the facility's systems and structures.
- Detailed inspections of all equipment, facilities, system and structures as well as reporting and correcting any deficiencies.
- Proper record keeping.
- Maintaining a supply of parts, material and equipment necessary to keep the facility running safely and efficiently.

This manual has been divided into 9 chapters.

CHAPTER 1 includes a brief description of the contents of the manual, and a discussion of its proper use.

CHAPTER 2 is an index of the complete contents of the manual.

CHAPTER 3 provides the background and design data of the facility.

CHAPTER 4 provides functional data and schematic information on the systems for the Facility and Treatment System.

CHAPTER 5 compiles component details

CHAPTER 6 describes procedures to be completed during the operation of the facility.

CHAPTER 7 contains a detailed maintenance manual for the products supplied and installed at the facility.

CHAPTER 8 contains a compilation of all inspection and testing certificates for all products supplied and installed at the facility.

CHAPTER 9 contains manufacture data and service information.

APPENDICES contain construction documents (record drawings, specifications, shop drawings, warranties, equipment operation and maintenance manuals).

Personnel must review and be familiar with all chapters of the manual to ensure that they have a thorough working knowledge of the Wastewater Treatment Facility. This will enable them to turn directly to the correct chapter should a reference be required.

1.2 PROJECT TEAM

Project Owner:	**City of Iqaluit** Building 901, PO Box 460, Iqaluit, NU X0A 0H0 Matthew Hamp Project Manager
Project Management:	**Colliers Project Leaders** Suite 700, 150 Isabella Street Ottawa, ON K1S 1V7 Charles Kretch Project Manager
Consultant:	**Nunami Stantec Limited** 1880C Nobel House Iqaluit, NU X0A 0H0 Glenn Prosko Project Manager
Contractor:	**Kudik Construction Ltd** 1519 Federal Rd. Iqaluit, NU X0A 0H0 Sandra Rousseau Project Manager

CHAPTER 2

TABLE OF CONTENTS

2. INDEX

1. INTRODUCTION 1.1
1.1 USE OF THE MANUAL 1.1
1.2 PROJECT TEAM 1.2

CHAPTER 2 ..... 1.1

2. INDEX 2.1

CHAPTER 3 2-1

3. BACKGROUND AND DESIGN DATA 3-1
3.1 BACKGROUND 3-1
3.1.1 Prior Facilities 3-1
3.2 FACILITY MECHANICAL SYSTEM ADDITION AND UPGRADES 3-2
3.2.1 Heating 3-3
3.2.2 Ventilation 3-4
3.2.3 Plumbing 3-6
3.2.3.1 Fuel System 3-6
3.2.4 Fire Protection 3-8

4. SCHEMATICS AND FUNCTIONAL DATA 4.1
4.1 GENERAL 4.1
4.2 HEATING SYSTEMS 4.1
4.2.1 Heating Plant 4.1
4.2.2 Heating Systems – Terminal Heating 4.4
4.2.3 Heating Systems – Air Handling Units & Heat Exchangers 4.5
4.3 VENTILATION SYSTEMS 4.7
4.3.1 Ventilation System - AHU-2 (Non-Classified Areas) 4.7
4.3.2 Ventilation System - AHU-3 (Headworks) 4.9
4.3.3 Ventilation System - HRV-1 (Office, Lab, and Washroom) 4.11
4.3.4 Ventilation System - Cooling Systems 4.12
4.4 DOMESTIC WATER SYSTEMS 4.14
4.5 NON-POTABLE WATER (NPW) FOR PROCESS USES 4.19
4.6 SANITARY SYSTEMS 4.20
4.7 PLUMBING FIXTURES 4.21
4.8 FIRE PROTECTION 4.22
4.9 FUEL OIL SYSTEM 4.22

5. COMPONENT DETAILS 5.1

5.1 GENERAL OVERVIEW 5.1
5.2 HEATING SYSTEMS 5.1
5.2.1 Heating Plant 5.1
5.2.2 Heating Systems – Terminal Heating 5.4
5.2.3 Heating Systems – Air Handling Units & Heat Exchangers 5.4
5.3 VENTILATION SYSTEMS 5.6
5.3.1 Ventilation System - AHU-2 (Non-Classified Areas) 5.6
5.3.2 Ventilation System - AHU-3 (Headworks) 5.8
5.3.3 Ventilation System - HRV-1 (Office, Lab, and Washroom) 5.10
5.3.4 Ventilation System - Cooling Systems 5.11
5.4 DOMESTIC WATER SYSTEMS 5.13
5.5 NON-POTABLE WATER (NPW) FOR PROCESS USES 5.15
5.6 SANITARY SYSTEMS 5.16
5.7 PLUMBING FIXTURES 5.17
5.8 FIRE PROTECTION 5.17
5.9 FUEL OIL SYSTEM 5.18

6. OPERATING PROCEDURES 6.1
6.1 GENERAL 6.1
6.2 BUILDING HVAC CONTROL SYSTEM 6.1

7. MAINTENANCE PROCEDURES AND SERVICE INFORMATION 7.1
7.1 GENERAL 7.1
7.1.1 Keep It Clean 7.1
7.1.2 Keep It Tight 7.1
7.1.3 Renewal Parts 7.1
7.1.4 Parts and Equipment Ordering Procedure 7.2
7.1.5 Scheduled Preventive Maintenance Program 7.2
7.1.6 Maintenance Legend 7.3
7.2 GENERAL MAINTENANCE 7.4
7.3 MAINTENANCE SCHEDULE 7.5
7.4 MAINTENANCE MANUALS 7.5
7.5 SPARE PARTS LIST 7.5

8. TESTING AND CERTIFICATION 8.1

9. CONTACT SERVICE INFORMATION 9.1

LIST OF APPENDICES

APPENDIX A – AS-BUILT DRAWINGS

APPENDIX B – APPROVED SHOP DRAWINGS

APPENDIX C – MAINTENANCE SCHEDULE

APPENDIX D – EQUIPMENT MAINTENANCE AND OPERATION MANUALS

APPENDIX E – SPARE PART LIST

APPENDIX F – CONTACT SERVICE INFORMATION

APPENDIX G – WARRANTIES & REPORTS

APPENDIX H – BUILDING HVAC CONTROLS SEQUENCES OF OPERATION

CHAPTER 3

3. BACKGROUND AND DESIGN DATA

3.1 BACKGROUND

3.1.1 Prior Facilities

Wastewater management in Iqaluit dates back to 1964 when a sanitary sewer outfall, made of five pipes, discharged raw sewage directly onto the beaches of the community of Frobisher Bay, as it was called back then. Shoreline discharge of raw sewage lasted for 12 years when the construction of several lift stations provided the means to pump sewage to a macerator system at the head of Koojesse Inlet. At the same time, a holding pond was built on the tidal plain at the head of the inlet. This facility operated successfully for several decades. However, several overflow and breaching events demanded improvements in the earth structures, and the perimeter drainage of the facility.

The lagoon performed well with the improvements in the earth structures and the perimeter drainage of the facility. The lagoon performed well as a primary treatment facility, with a continuous discharge. Effluent quality from the lagoon systems varied significantly over the course of the year because the only process at work in the winter months was sedimentation.

In the early 90's, regulatory expectations prompted the City to complete an engineering feasibility study on improving the treatment system. The first attempt to implement a secondary treatment for Iqaluit was a design-build contract that was awarded in 1998 to a contractor that selected a membrane bioreactor (MBR) process. Unfortunately, the inexperience of the design builder in northern wastewater treatment became evident by mid-1999.

An evaluation of the incomplete sewage treatment plant was performed in 2002 towards conducting remedial work. Phase 1 of the remedial work involved building the primary treatment system in an addition to the original building, and this work was completed in 2006. This process work consisted of an auger screen, and a primary screen (Salsnes Filter or Leap Primary). Phase 2 of the project was to include design and construction of a secondary clarifier to match the hydraulic capacity of the aeration basins. Unfortunately, funding for the project was only sufficient for Phase 1.

An evaluation of the incomplete sewage treatment plant was performed in 2002 towards conducting remedial work. Phase 1 of the remedial work involved building the primary treatment system in an addition to the original building, and this work was completed in 2006. The mechanical systems implemented at that time included a hydronic (glycol) heating system, ventilation systems, plumbing systems and fuel oil system. The original systems and subsequent upgrades are described in the following paragraphs.

The original heating system consisted of two fuel oil (diesel) fired boilers, two primary pumps and two secondary pumps, servicing a hydronic system utilizing a glycol/water solution as

the circulating heating fluid. Heating for the plant areas was accomplished by distribution of glycol through a direct piping system to terminal heating equipment. The heating system was upgraded in 2006 to provide hot glycol to existing and new unit heaters, new wall fin radiation, existing effluent water heat exchanger and new Headworks air handling unit reheat coil.

The original ventilation systems included one air handling unit, one small exhaust fan and a modulating damper system. The air handling unit provides tempered air to the First Floor Blower Room and the Second Floor. The small exhaust fan services the Washroom and discharges into the Bioreactor Room. Generator Room ventilation was provided by openings in the exterior wall and Blower Room wall utilizing motorized dampers based on local thermostat setting. The ventilation was upgraded in 2006 to include removal of existing exhaust fan and associated ductwork to accommodate the Headworks Building addition and new explosion proof heat recovery air handling unit to service the Headworks Building. Supply and exhaust ducting and louvers were added to the Emergency Generator Room to serve the Emergency Generator

The original plumbing systems consisted of one Washroom containing a water closet, lavatory and shower. Floor drains are located throughout the building. The plumbing system was upgraded in 2006 to include a new sump c/w pumps to service the Headworks Building addition, rerouting of the existing plumbing fixtures and Cake Bin Room sump drainage piping to the Headworks Building new raw water pump vault.

The original domestic water system consisted of a water storage tank c/w pressure system (jet pump and expansion tank) and electric domestic hot water heater. Domestic water is distributed by copper piping to Washroom fixtures, hand sink and Laboratory sink.

Process system upgrades conducted in 2006 included three new filtered effluent water booster pumps and one new effluent pressure tank for cleaning of the process screens and filters. A heating system was added to supply hot Filtered Effluent Water (FEW) to the Headworks building.

The original fuel oil system consists of one double walled outdoor 9,600 liter storage tank, one 450 liter indoor day tank and a fuel oil transfer system that provides fuel for the heating boilers. In 2006, a new double walled fuel day tank was installed in the Emergency generator room, as well as an automated filling system from the new 10,000 Liter storage tank.

3.2 FACILITY MECHANICAL SYSTEM ADDITION AND UPGRADES

The scope of the project is to upgrade the HVAC systems for the WWTP to meet or exceed requirements of the Government of Nunavut "Good Building Practice Guidelines, 2nd edition, December 2005, (referred herein as "Good Building Practice (GBP)"), applicable ASHRAE standards and guidelines, normal industry practice for similar facilities, and other applicable codes and standards.

3.2.1 Heating

The upgrades to the heating systems include the following:

- Removal of all heating piping and equipment including the heating plant except for:
    - Unit heaters and heating water pipe in the upper and lower headworks (classified area);
    - Select unit heaters in the unclassified areas of the building where location and condition of heater were suitable for re-use.
- Installation of a new primary/secondary heating system piped in a reverse-return setup to terminal heating devices and other heating equipment.
    - The system sizing and heating outputs are based on a 30°F supply/return temperature differential and the use of 50% propylene glycol as the heating water media.
- Installation of two (2) high-efficient oil-fired cast iron sectional boilers in in the repurposed mechanical room located on the main floor.
    - Each boiler sized at 100% of the peak heating load which includes space heating, ventilation heating, water service recirculation heating, and process hot non-potable water temperature boosting.
    - Each boiler has a modulating burner.
    - Each boiler has a dedicated primary pump sized for the rated boiler output and its maximum firing rate for the given temperature differential.
    - Boiler boilers are complete with packaged controllers for their operation and are monitored and enabled by the building automation system (BAS).
- Installation of duplex secondary heating water pumps equipped with variable flow drives (VFD's) on circulation pumps to reduce energy consumption. The pumps operate as lead/standby with each pump sized for 100% of the heating load.
- Installation of a small packaged automatic heating water media makeup system with pump, tank and pressure reducing valve.
- Installation of a chemical pot feeder and heating water media side stream filter.
- Terminal heating is provided by a combination of new and existing devices as follows:
    - Classified areas (headworks):
        - Explosion proof hydronic unit heaters provide heating for the upper and lower level headworks.

        - Hydronic baseboard radiation provides heating for the stairwell and vestibule on the north end of the building.

    - Unclassified areas (remainder of building):

        - Hydronic unit heaters provide heating for unclassified areas including the MBBR and upper DAF tank area, upper level mezzanine, Belt Filter Press area, polymer mixing area, process blower area, lower DAF tank area, and the sludge trailer room.

        - A hydronic cabinet unit heater provides heating for the new stairwell and vestibule on the south end of the building.

        - Hydronic baseboard radiation provides heating for the water service entry room, old electric room, and lab.

        - Electric baseboard radiation provides heating for the office and the washroom.

    - Each terminal heating unit has its own thermostatic control to provide individual space temperature control.

3.2.2 Ventilation

The upgrades to the ventilation system include the following:

- Removal of all existing ventilation systems except for:
    - AHU-3 and system serving the headworks area.
- Installation of AHU-2 system serving the unclassified areas of the building:
    - AHU-2 is custom built 100% outdoor air unit complete with two (2) VFD type fans, an air-to-air fixed plate heat exchanger, face and bypass dampers, preheat and reheat hydronic heating coils and exhaust and outdoor air dampers. The unit is installed in above the MBBR cells and provides fresh air to the unclassified areas including the MBBR and upper DAF tank area, upper level mezzanine, Belt Filter Press area, polymer mixing area, process blower area, lower DAF tank area, and the sludge trailer room
    - The air system provides 3 to 6 air changes per hour.
- Re-use of existing AHU-3 serving the classified areas of the building:
    - AHU-3 is an existing custom built 100% outdoor air unit complete with two (2) two-speed fans, an air-to-air fixed plate heat exchanger, defrost bypass dampers, a reheat hydronic heating coil and exhaust and outdoor air dampers. The unit is installed on the main floor of the existing headworks building and services the existing headworks room.

  - To allow the unit to be re-used, the existing controls were migrated from the previous PLC system to the new BAS system. New control sensors were provided for all existing. Several new sensors were also provided as required by current codes for operation.

  - The air system provides 6 to 12 air changes per hour.

  - The system and its equipment meet the electrical requirements for Class 1 Div. 2 operation.

- Installation of HRV-1 system serving the office/lab area:

  - HRV-1 is a light commercial packaged heat recovery ventilator and pre-heat and re-heat coils PHC-1 and RHC-1 installed on the mezzanine above the office/washroom. The unit provides fresh tempered air to the old electrical room, lab, washroom, and office to pressurize the spaces relative to the adjacent plant areas to minimize unpleasant odors.

- Installation of CF-1 system providing cooling for the mechanical room:

  - Cooling is accomplished via economizer cooling using a supply fan and interlocked modulating return/outdoor air dampers. Relief air for the space is provided via the boiler combustion air duct.

- Installation of CF-2 system providing cooling for the electrical room:

  - Cooling is accomplished via economizer cooling using a supply fan and interlocked modulating return/outdoor air dampers. Relief air for the space is provided via a modulating exhaust air damper.

- Installation of tempered supply air system for process blowers:

  - A ducted hydronic unit heater complete with modulating 2-way valve temperature controller and 2-position outdoor air damper provide make-up air tempered to a minimum of -15°C to the area adjacent the process blowers serving the primary filters and process aeration.

  - The system also provides cooling for the area surrounding the process blowers.

- Installation of new cooling air and combustion air system for the existing generator:

  - Due to the removal of the south wall to allow the DAF tank installation, the existing generator ventilation system had to be removed. A new system was provided.

  - Cooling is accomplished via economizer cooling using the generator radiator fan and interlocked modulating return/exhaust air dampers with the exhaust discharging through the exterior wall via a wall hood and the return directly to the space from the damper. Cooling (make-up) air and generator combustion air are provided by outdoor air dampers mounted directly to wall hood.

3.2.3 Plumbing

The upgrades to the plumbing systems includes the following

- Decommissioning and removal of all existing sanitary, domestic water, and non-potable water systems identified as not suitable for re use or not required.
- Installation of a new insulated, recirculated, and heated water service from a new access vault (connected to the City of Iqaluit water system) installed on the southeast corner of the building.
    - Duplex lead/standby pumps in the water service entry room provide recirculation to/from the access vault and recirculation of the new extension of the City of Iqaluit water service line installed for this upgrade.
    - Heat injection for the recirculated system is provided by duplex lead/standby pumps and a double walled heat exchanger downstream of the water service recirculation pumps before the recirculation line leaves the building.
- Installation of a new potable water system (hot and cold) through the building. The hot water system includes a recirculation loop and pump due to the long runs required.
    - The existing washroom and lab domestic water piping was retained for re-use and has been connected to the new potable water system.
- Installation of a new oil-fired domestic hot water heater in the mechanical room for building domestic hot water.
- Installation of a new non-potable cold-water system to provide water to the various process systems. The system is supplied with water by the building water service through a reduced pressure backflow preventer.
- Installation of a non-potable hot water system including a temperature boosting heat exchanger. Pre-heated hot water is supplied to the system by the building domestic hot water system through a reduced pressure backflow preventer.
- Installation of new duplex lead/lag sump pumps and control panels.
    - The existing sump pumps and control panels were removed and replaced by new pumps and control panels.
    - One new sump was added between the two DAF tanks.
- Modifications to the existing sanitary drainage system to support the new floors drains, sump pit, and to avoid conflicts with new process piping and equipment.

3.2.3.1 Fuel System

The upgrades to the fuel system for the building include the following:

- Decommissioning and removal of all existing fuel oil equipment and piping. Several select lines below the existing concrete lower level floor slab were abandoned in place after being cleaned and sealed.
- Installation of a new double walled (100% containment) above ground fuel oil storage tank on the southeast corner of the building to provide storage for No. 2 fuel oil (ultra-low Sulphur Arctic Grade diesel fuel) for use by the heating boilers, domestic hot water heater, and emergency generator.
    - The tank was sized to provide two weeks of operation at peak building heating demand (included water service re-circ heat injection).
    - In addition, the tank has sufficient capacity to provide for 3 days of continuous operation of the existing standby generator at full load. This is an allowance for power outages during blizzard conditions.
    - A float switch in the tank will provide an alarm at 25% of the tank volume. The alarm is monitored by the BAS.
    - A hydrocarbon detector in the tank interstitial space will provide an alarm in case of a leak in the primary tank. The alarm is monitored by the BAS.
    - Anti-siphon protection is provided by a normally closed solenoid valve at the tank that opens only during filling of the interior day tanks.
- Installation of a duplex fuel oil pump transfer package and control panel. The pumps operate in lead/lag and fill the building interior auxiliary tanks when required.
- Installation of two (2) double walled (100% containment) auxiliary day tanks for the heating boilers / domestic hot water heater and for the emergency generator.
    - Both day tanks are complete with level switches to provide low/high level alarms and to start/stop the fuel oil transfer pumps and mechanical leaks gauges in case of a leak in the primary tank.
    - Both tanks allow of an immediate usable volume of fuel oil and allow the fuel oil to be warmed prior to use by the equipment.
    - The boiler and domestic hot water heat day tanks is sized to provide 4 hours of operation at the peak heating demand.
    - The boiler and domestic hot water heat day tank is sized to provide 4 hours of operation at the peak heating demand.
    - The generator day tank is sized to provide 4 hours of operation at the generators maximum standby power generation rating.

3.2.4 Fire Protection

The building is not sprinklered. In lieu, passive and active fire protection systems have been provided.

Passive mechanical protection systems include rated fire stopping, fire dampers and the use of low flame and smoke spread rated material. To provide the highest level of passive protection the facility is of non-combustible construction throughout.

Fire extinguishers are installed to the requirements of NFPA 10 and the Authority having jurisdiction. Multi-purpose use dry chemical extinguishers (Type ABC) have been provided for general service. Fire extinguishers are hanger mounted.

END OF CHAPTER 3

CHAPTER 4

4. SCHEMATICS AND FUNCTIONAL DATA

4.1 GENERAL

The following tables describe where the components to the various systems are located and the function that each performs. For each table, there are drawings that can be referenced, to better understand the flow of that part of the Water Treatment Plant.

4.2 HEATING SYSTEMS

4.2.1 Heating Plant

(Refer to Drawing M301, M302, M500, M601, and M602 in Appendix A)

The following table identifies the components related to the Hydronic Heating System.

No.	Component	Location	Function Performed	Remarks
1	Thermometers (general)	Various locations throughout piping system	Visual indication of temperature in piping at installed location	Used to verify operation of equipment, valves, and controls
2	Pressure Gauges (general)	Various locations throughout piping system	Visual indication of pressure in piping at installed location	Used to verify operation of equipment, valves, and controls
3	Isolation Valves (general)	Various locations throughout piping system	Valves used for isolation equipment and fixtures	Typically, Normally Open
4	Manual Air Vent (general)	At local high points in piping system	Allows for venting/removal of trapped air from heating system	Normally Closed
5	Boiler B-1	Mechanical Room	Provides heating of heating water	Boiler provides 100 % heating capacity for system.
6	AAV – Automatic Air Vent & Isolation Valve	Boiler B-1	Allows for venting/removal of trapped air from Boiler B-1	Vents air automatically
7	Boiler safety devices	Boiler B-1	Provides safety limits and controls for operation of boiler	Low water cut-off, high temp cutoff, pressure/temperatur e relief valve

No.	Component	Location	Function Performed	Remarks
8	Temperature Sensor (TT)	Boiler B-1 return piping	Return water temperature to boiler	
9	Temperature Sensor (TT)	Boiler B-1 supply piping	Supply water temperature from boiler	
10	Balancing Valve	Boiler B-1 return piping	Used for balancing of flow rate to boiler	Set by TAB agent to required flow rate
11	Isolation Valve	Boiler B-1 return piping immediately upstream of boiler	Used to isolate boiler	Normally Open
12	Isolation Valve	Pump P-1.1 Suction Piping	Used to isolate pump	Normally Open
13	Strainer	Pump P-1.1 Suction Piping	Provides for removal of particulates from water before passing through pump	Strainer to be cleaned if plugged
14	Boiler Circulation Pump (P-1.1)	Mechanical Room	Circulates heating water through boiler from primary header	
15	Check Valve	Pump P-1.1 Discharge Piping	Prevents backflow through pump when not operating	
16	Isolation Valve	Pump P-1.1 Discharge Piping	Valves used for isolation of pumps	Normally Open
17	Boiler B-2	Mechanical Room	Provides heating of heating water	Boiler provides 100 % heating capacity for system.
18	AAV – Automatic Air Vent & Isolation Valve	Boiler B-2	Allows for venting/removal of trapped air from Boiler B-1	Vents air automatically
19	Boiler safety devices	Boiler B-2	Provides safety limits and controls for operation of boiler	Low water cut-off, high temp cutoff, pressure/temperatur e relief valve
20	Temperature Sensor (TT)	Boiler B-2 return piping	Return water temperature to boiler	
21	Temperature Sensor (TT)	Boiler B-2 supply piping	Supply water temperature from boiler	
22	Balancing Valve	Boiler B-2 return piping	Used for balancing of flow rate to boiler	Set by TAB agent to required flow rate
23	Isolation Valve	Boiler B-2 return piping immediately upstream of boiler	Used to isolate boiler	Normally Open

No.	Component	Location	Function Performed	Remarks
24	Isolation Valve	Pump P-1.2 Suction Piping	Used to isolate pump	Normally Open
25	Strainer	Pump P-1.2 Suction Piping	Provides for removal of particulates from water before passing through pump	Strainer to be cleaned if plugged
26	Boiler Circulation Pump (P-1.2)	Mechanical Room	Circulates heating water through boiler from primary header	
27	Check Valve	Pump P-1.2 Discharge Piping	Prevents backflow through pump when not operating	
28	Isolation Valve	Pump P-1.2 Discharge Piping	Valves used for isolation of pumps	Normally Open
29	Air Separator & Automatic Air Vent (AAV)	Upper Level near office	Automatic separation of trapped air from heating water system	Vortex type separator
30	Expansion Tank TK-1.1 & TK-1.2	Mechanical Room	Maintains heating system operating pressure and allows for expansion of heat water fluid	
31	Pressure Sensor (PS)	Expansion tank TK-1.1/1.2 piping	Pressure of heating water system	
32	Glycol Fill System P-1.5	Mechanical Room	Transfers mixed glycol from fill tank to heating system	Heating system operation to be monitored during filling of system
33	Check Valve	Pump P-1.5 Discharge Piping	Prevents backflow of glycol	
34	Isolation Valve	Pump P-1.5 Discharge Piping	Valve used for isolation of glycol fill system	Normally Open
35	Isolation Valves	Pump P-1.3 & 1.4 Suction Piping	Valves used for isolation of pumps	Normally Open
36	Strainers	Pump P-1.3 & 1.4 Suction Piping	Provides for removal of particulates from water before passing through pump	Strainer to be cleaned if plugged
37	Heating Water Circulation Pumps (P-1.3 & P-1.4)	Mechanical Room	Circulates heating water through building to heating equipment	Lead/standby operation, VFD driven motors
38	Check Valves	Pump P-1.3 & 1.4 Discharge Piping	Prevents backflow through pump when not operating	

No.	Component	Location	Function Performed	Remarks
39	Isolation Valves	Pump P-1.3 & 1.4 Discharge Piping	Valves used for isolation of pumps	Normally Open
40	Chemical Pot Feeder	Between Pump P-1.3 & 1.4 Supply and Discharge Piping	Allows feeding of chemicals into heating water system for treatment	Normally isolated from system, requires caution when being used as system under pressure
41	Sidestream Filter Assembly	Between Pump P-1.3 & 1.4 Supply and Discharge Piping	Provides continuous filtration of heating water system and visual indication of flow and heating water appearance	
42	Temperature Sensor (TT)	Heating water return piping upstream of Air Separator	Return water temperature from building	
43	Temperature Sensor (TT)	Heating water supply piping downstream of P-1.3/1.4	Supply water temperature to building	

4.2.2 Heating Systems – Terminal Heating

(Refer to Drawing M301, M302, M601, and 2/M602 in Appendix A)

The following table identifies the components related to terminal heating devices.

No.	Component	Location	Function Performed	Remarks
1	Isolation Valves (general)	Various locations throughout piping system	Valves used for isolation equipment and fixtures	Typically, Normally Open
2	Manual Air Vent (general)	Equipment Return Piping	Allows for venting/removal of trapped air from heating equipment	Normally Closed
3	Drain Valve (general)	Equipment Supply Piping	Allows for draining of heating water from heating equipment	Normally Closed & Capped
4	Balancing Valve (general)	Equipment Return Piping	Valve used for balancing of flow rate to heating equipment	Set by TAB agent to required flow rate
5	Space Thermostat (T)	In vicinity of unit heaters, cabinet unit heaters, and baseboards	Temperature control for heating devices	Room temperature to be maintained at set point.

No.	Component	Location	Function Performed	Remarks
6	Hydronic Unit Heater	Located throughout the building	Provide heating for the building	Controlled by thermostat near unit / in same space
7	Hydronic Cabinet Unit Heater	New stairwell, lower level	Provide heating for the new stairwell	Controlled by thermostat near unit / in same space
8	Hydronic Baseboard Radiation	Unit heaters located throughout Waste Water Treatment Plant	Provide heating for the building	Controlled by thermostat near unit / in same space

4.2.3 Heating Systems – Air Handling Units & Heat Exchangers

(Refer to Drawing M301, M302, M601, and 2/M602 in Appendix A)

The following table identifies the components related to heating portions of the Air Handling Units and Heat Exchangers.

No.	Component	Location	Function Performed	Remarks
1	Thermometers (general)	Various locations throughout piping system	Visual indication of temperature in piping at installed location	Used to verify operation of equipment, valves, and controls
2	Isolation Valves (general)	Various locations throughout piping system	Valves used for isolation equipment and fixtures	Typically, Normally Open
3	Manual Air Vent (general)	Equipment Return Piping	Allows for venting/removal of trapped air from heating equipment	Normally Closed
4	Drain Valve (general)	Equipment Supply Piping	Allows for draining of heating water from heating equipment	Normally Closed & Capped
5	Balancing Valve (general)	Equipment Return Piping	Valve used for balancing of flow rate to heating equipment	Set by TAB agent to required flow rate
6	Pre-heat coil control valve (HRV-1)	Adjacent HRV-1	Modulates heating water supply flow rate to HRV coil to control coil discharge air temperature	Two-way modulating control valve

No.	Component	Location	Function Performed	Remarks
7	Re-heat coil control valve (HRV-1)	Adjacent HRV-1	Modulates heating water supply flow rate to HRV coil to control coil discharge air temperature	Two-way modulating control valve
8	Pre-heat coil pump (P-1.6 for AHU-2)	Adjacent AHU-2	Circulates heating water through AHU-2 PHC to prevent freeze-up of coil	
9	Pre-heat coil control valve (AHU-2)	Adjacent AHU-2	Modulates heating water supply flow rate to AHU coil to control coil discharge air temperature	Two-way modulating control valve
10	Re-heat coil control valve (AHU-2)	Adjacent AHU-2	Modulates heating water supply flow rate to AHU coil to control coil discharge air temperature	Two-way modulating control valve
11	Heating coil control valve (AHU-3)	Adjacent AHU-3	Modulates heating water supply flow rate to AHU coil to control coil discharge air temperature	Three-way modulating diverting valve
12	Heat Exchanger control valve (HEX-3.1)	Adjacent HEX-3.1	Modulates heating water supply flow rate to water service heat injection HEX to control outlet temperature	Two-way modulating control valve
13	Heat Exchanger control valve (HEX-3.2)	Adjacent HEX-3.2	Modulates heating water supply flow rate to hot NPW booster HEX to control outlet temperature	Two-way modulating control valve

4.3 VENTILATION SYSTEMS

4.3.1 Ventilation System - AHU-2 (Non-Classified Areas)

(Refer to Drawing M401, M402, M601, and 2/M602 in Appendix A)

The following table identifies the components related to the AHU-2 System

No.	Component	Location	Function Performed	Remarks
1	Outside air damper (CD-1)	At exterior wall penetration	Allows unit outdoor air duct to be closed when unit is not operating	Open when unit is running
2	Exhaust air damper (CD-2)	At exterior wall penetration	Allows unit exhaust air duct to be closed when unit is not operating	Open when unit is running
3	***Outdoor Air / Supply Air side of Unit (in order)***	***Platform above MBBR cells on upper level***		
4	Outside air temperature sensor	In air handling unit	Measures outdoor air temperature entering unit	
5	Pre-Filters	In air handling unit	Filters air entering unit	
6	Pre-filter differential pressure sensor	In air handling unit	Measures pressure drop across filters	Provides indication when filters need replacing
7	Pre-heat Coil	In air handling unit	Pre-heats outdoor air entering unit	Heat to temperature that prevents heat recovery core from requiring defrost cycles
8	Pre-heat coil temperature sensor	In air handling unit	Measures air temperature leaving coil	
9	Face and Bypass Dampers	In air handling unit	Allows bypass of heat recovery core	When heat recovery is not required / free cooling is needed
10	Heat Recovery Core (supply side)	In air handling unit	Exchanges heat between exhaust air stream and supply air stream	Fixed plate heat recovery core

No.	Component	Location	Function Performed	Remarks
11	Heat recovery supply air temperature sensor	In air handling unit	Measures air temperature leaving heat recovery core	
12	Final Filters	In air handling unit	Additional filtration of supply air	
13	Final filter differential pressure sensor	In air handling unit	Measures pressure drop across filters	Provides indication when filters need replacing
14	Re-heat Coil	In air handling unit	Heats supply air after heat recovery	Heats to required supply setpoint
15	Supply Fan	In air handling unit	Provides outdoor air / supply air flow through unit	VFD driven motor
16	Supply air temperature sensor	In air handling unit	Measures air temperature leaving unit	
17	Supply air freeze-stat	In air handling unit	Signals alarm and shuts down unit if supply air is below setpoint	
18	Supply air flow rate sensor	In air handling unit	Measures supply air flow rate	Minimum airflow volumes are required to allow de-rating of space per NFPA 820
19	***Return Air / Exhaust Air side of Unit (in order)***			
20	Return air filter	In air handling unit	Filters air entering unit	Prevents dust build-up on heat recovery coil
21	Return filter differential pressure sensor	In air handling unit	Measures pressure drop across filters	Provides indication when filters need replacing
22	Return air temperature sensor	In air handling unit	Measures return air temperature entering unit	
23	Heat Recovery Core (exhaust side)	In air handling unit	Exchanges heat between exhaust air	Fixed plate heat

No.	Component	Location	Function Performed	Remarks
			stream and supply air stream	recovery core
24	Heat recovery exhaust air temperature sensor	In air handling unit	Measures air temperature leaving heat recovery core	
25	Exhaust fan	In air handling unit	Provides return air / exhaust air flow through unit	VFD driven motor
26	Exhaust air flow rate sensor	In air handling unit	Measures supply air flow rate	Minimum airflow volumes are required to allow de-rating of space per NFPA 820

4.3.2 Ventilation System - AHU-3 (Headworks)

(Refer to Drawing M401, M402, M601, and 2/M602 in Appendix A)

The following table identifies the components related to the AHU-3 System

No.	Component	Location	Function Performed	Remarks
1	Outside air damper	At exterior wall penetration	Allows unit outdoor air duct to be closed when unit is not operating	Open when unit is running
2	Exhaust air damper	At exterior wall penetration	Allows unit exhaust air duct to be closed when unit is not operating	Open when unit is running
3	***Outdoor Air / Supply Air side of Unit (in order)***	***Lower Level headworks***		
4	Pre-Filters	In air handling unit	Filters air entering unit	
5	Pre-filter differential pressure sensor	In air handling unit	Measures pressure drop across filters	Provides indication when filters need replacing
6	Outside air temperature sensor	In air handling unit	Measures outdoor air temperature entering unit	
7	Face and Bypass Dampers	In air handling unit	Allows bypass of heat recovery core	When heat recovery is not required / free cooling

				is needed / heat recovery core requires defrosting
8	Heat Recovery Core (supply side)	In air handling unit	Exchanges heat between exhaust air stream and supply air stream	Fixed plate heat recovery core
9	Heat recovery supply air temperature sensor	In air handling unit	Measures air temperature leaving heat recovery core	
10	Heating Coil	In air handling unit	Heats supply air after heat recovery	Heats to required supply setpoint
11	Supply Fan	In air handling unit	Provides outdoor air / supply air flow through unit	Two speed motor
12	Supply air temperature sensor	In air handling unit	Measures air temperature leaving unit	
13	Supply air freeze-stat	In air handling unit	Signals alarm and shuts down unit if supply air is below setpoint	
14	Supply air flow rate sensor	In air handling unit	Measures supply air flow rate	Minimum airflow volumes are required to allow de-rating of space per NFPA 820
15	***Return Air / Exhaust Air side of Unit (in order)***			
16	Return air temperature sensor	In air handling unit	Measures return air temperature entering unit	
17	Return air filter	In air handling unit	Filters air entering unit	Prevents dust build-up on heat recovery coil
18	Return filter differential pressure sensor	In air handling unit	Measures pressure drop across filters	Provides indication when filters need replacing

19	Heat Recovery Core (exhaust side)	In air handling unit	Exchanges heat between exhaust air stream and supply air stream	Fixed plate heat recovery core
20	Heat recovery exhaust air temperature sensor	In air handling unit	Measures air temperature leaving heat recovery core	
21	Exhaust fan	In air handling unit	Provides return air / exhaust air flow through unit	Two speed motor
22	Exhaust air flow rate sensor	In air handling unit	Measures supply air flow rate	Minimum airflow volumes are required to allow de-rating of space per NFPA 820

4.3.3 Ventilation System - HRV-1 (Office, Lab, and Washroom)

(Refer to Drawing M401, M402, M601, and 2/M602 in Appendix A)

The following table identifies the components related to the HRV-1 System

No.	Component	Location	Function Performed	Remarks
1	Outside air damper (CD-8)	At exterior wall penetration	Allows unit outdoor air duct to be closed when unit is not operating	Open when unit is running
2	Pre-Filters	In air handling unit	Filters air entering unit	
3	Pre-heat Coil (PHC-1)	In air handling unit	Pre-heats outdoor air entering unit	Heat to temperature that prevents HRV from requiring defrost cycles
4	Pre-heat coil temperature sensor	In air handling unit	Measures air temperature leaving coil	
5	Heat Recovery Ventilator (HRV-1)	On mezzanine above washroom/office	Packaged heat recovery ventilator unit	
6	Final Filters	Immediately downstream of HRV-1	Additional filtration of supply air	
7	Re-heat Coil (RHC-1)	Immediately downstream of HRV-1	Heats supply air after heat recovery	Heats to required

No.	Component	Location	Function Performed	Remarks
				supply setpoint
8	Supply air temperature sensor	Immediately downstream of HRV-1	Measures air temperature leaving unit	
9	Exhaust air backdraft damper	At exterior wall penetration	Allows exhaust air from HRV-1 to be discharged outside	Gravity backdraft damper

4.3.4 Ventilation System - Cooling Systems

(Refer to Drawing M401, M402, M601, and 2/M602 in Appendix A)

The following table identifies the components related to the Cooling Ventilation Systems

No.	Component	Location	Function Performed	Remarks
	Ventilation System - Cooling Systems			
1	Cooling Fan (CF-1)	Mechanical Room	Provides cooling air flow	
2	Space Thermostat for CF-1 (T)	Mechanical Room	Temperature sensor for cooling fan system	Starts fans when space above setpoint and modulates economizer dampers
3	Outside air damper (CD-3)	Mechanical Room	Provides outdoor (cooling) air for CF-1 economizer	Normally Closed, exhaust air via combustion air duct
4	Return air damper (CD-4)	Mechanical Room	Provides return (room air) for CF-1 economizer	Normally Open
5	Pre-Filter (CF-1)	Downstream of CD-3 and upstream of CF-1	Filters outdoor air entering cooling fan	
6	Pre-filter differential pressure sensor (CF-1)	On CF-1 filter	Measures pressure drop across filters	Provides indication when filters need replacing
7	Supply air temperature sensor (CF-1)	In CF-1 supply air discharge duct	Measures air temperature leaving unit	

No.	Component	Location	Function Performed	Remarks
8	Supply air freeze-stat (CF-1)	In CF-1 supply air discharge duct	Signals alarm and shuts down unit if supply air is below setpoint	
9	Cooling Fan (CF-2)	Electrical Room	Provides cooling air flow	
10	Space Thermostat for CF-2 (T)	Electrical Room	Temperature sensor for cooling fan system	Starts fans when space above setpoint and modulates economizer dampers
11	Outside air damper (CD-5)	Electrical Room	Provides outdoor (cooling) air for CF-2 economizer	Normally Closed
12	Return air damper (CD-6)	Electrical Room	Provides return (room air) for CF-2 economizer	Normally Open
13	Exhaust air damper (CD-7)	Electrical Room	Provides exhaust air for CF-2 economizer	Normally Closed
14	Pre-Filter (CF-2)	Downstream of CD-5 and upstream of CF-2	Filters outdoor air entering cooling fan	
15	Pre-filter differential pressure sensor (CF-2)	On CF-2 filter	Measures pressure drop across filters	Provides indication when filters need replacing
16	Supply air temperature sensor (CF-2)	In CF-2 supply air discharge duct	Measures air temperature leaving unit	
17	Supply air freeze-stat (CF-2)	In CF-2 supply air discharge duct	Signals alarm and shuts down unit if supply air is below setpoint	
18	Temperature Controller and space temperature sensor	Generator room	Modulates generator cooling economizer dampers to maintain room setpoint	
19	Outside air damper (CD-11)	Generator room	Provides combustion air for generator when it is running	Normally Closed, interlocked with generator to open on generator start-up
20	Outside air damper (CD-12)	Generator room	Provides outdoor (cooling) air for generator economizer	Normally Closed

No.	Component	Location	Function Performed	Remarks
21	Return air damper (CD-13)	Generator room	Provides return (room air) for generator economizer	Normally Open
22	Exhaust air damper (CD-14)	Generator room	Provides exhaust air for generator economizer	Normally Closed

4.4 DOMESTIC WATER SYSTEMS

(Refer to Drawings 1/M603, M201, and M202 in Appendix A)

The following table identifies the components related to the Domestic Water System.

No.	Component	Location	Function Performed	Remarks
1	Thermometers (general)	Various locations throughout piping system	Visual indication of temperature in piping at installed location	Used to verify operation of equipment, valves, and controls
2	Pressure Gauges (general)	Various locations throughout piping system	Visual indication of pressure in piping at installed location	Used to verify operation of equipment, valves, and controls
3	Isolation Valves (general)	Various locations throughout piping system	Valves used for isolation equipment and fixtures	Typically, Normally Open
4	Water Service Entry Isolation Valve	Water Service Entry Room	Valve for isolation of building from municipal system	Used to isolate municipal water service within building
5	Water Service Recirc Isolation Valve	Water Service Entry Room	Valve for isolation of building from municipal system	Used to isolate municipal water service recirculation within building
6	Temperature Sensor (TT)	Water service entry, immediately downstream of isolation valve	Temperature sensor for water	Temperature of water service to building

No.	Component	Location	Function Performed	Remarks
7	Temperature Sensor (TT)	Water service recirc, immediately upstream of isolation valve	Temperature sensor for water	Temperature of water service recirculation from building after heat injection
8	Water Service Recirc Pumps (P-3.1 & P-3.2)	Water Service Entry Room	Provides recirculation of the water service to the building	Lead/standby operation
9	Isolation Valves	Pump P-3.1 & P-3.2 Suction Piping	Valves used for isolation of pumps	Normally Open
10	Strainers	Pump P-3.1 & P-3.2 Suction Piping	Provides for removal of particulates from water before passing through pump	Strainer to be cleaned if plugged
11	Check Valves	Pump P-3.1 & P-3.2 Discharge Piping	Prevents backflow through pump when not operating	
12	Isolation Valves	Pump P-3.1 & P-3.2 Discharge Piping	Valves used for isolation of pumps	Normally Open
13	Water Service Heat Injection Pumps (P-3.4 & P-3.5)	Water Service Entry Room	Provides recirculation of the water service to the building	Lead/standby operation
14	Isolation Valves	Pump P-3.4 & P-3.5 Suction Piping	Valves used for isolation of pumps	Normally Open
15	Check Valves	Pump P-3.4 & P-3.5 Discharge Piping	Prevents backflow through pump when not operating	
16	Isolation Valves	Pump P-3.4 & P-3.5 Discharge Piping	Valves used for isolation of pumps	Normally Open

No.	Component	Location	Function Performed	Remarks
17	Water Service Heat Injection Heat Exchanger (HEX-3.1)	Water Service Entry Room	Adds heat to the water service recirculation line leaving the building for additional freeze protection of the municipal water mains	Double walled brazed plate heat exchanger with vented interstitial space, wall mounted
18	Pressure/Temperature Relief Valve	Discharge side of HEX-3.1	Automatic relief of heat injection HEX pressure if valve preset limit is exceeded	Normally Closed
19	Water meter	Water Service Entry Room	Monitors building water flow rate and usage	Supplied under Process Scope of Work for Project
20	Isolation Valves	Upstream/downstream of water meter	Valves used for isolation of the water meter	Normally Open
21	Bypass Valve	At water meter	Valve to allow water meter to be bypassed	Normally Closed and locked
22	Reduced pressure backflow preventer (RPBF-1)	Water Service Entry Room	Backflow and back-siphonage prevention from building to municipal water service	For building domestic cold water system
23	Reduced pressure backflow preventer (RPBF-2)	Water Service Entry Room	Backflow and back-siphonage prevention from	For building non-potable water system

No.	Component	Location	Function Performed	Remarks
			building to municipal water service	
24	Reduced pressure backflow preventer (RPBF-3)	Upper level near stairs into upper level headworks (gridline C:2)	Backflow and back-siphonage prevention from non potable water to potable water system	For process non-potable hot water system supply from domestic hot water system
25	Pressure reducing valve	Immediately downstream of RPBF-1	Reduces municipal water pressure above setpoint for building use	
26	Pressure reducing valve	Immediately downstream of RPBF-2	Reduces municipal water pressure above setpoint for building use	
27	Isolation Valves	Upstream/downstream of water pressure reducing valve	Valves used for isolation of the water meter	Normally Open
28	Bypass Valve	At water pressure reducing valve	Valve to allow water pressure reducing valve to be bypassed	Normally Closed
29	Domestic Water Heater (DHWH-1)	Mechanical Room	Provides domestic hot water for WWTP	
30	Isolation Valves	DHWT-1 inlet and outlet	Used to isolate DHWH	Normally Open

No.	Component	Location	Function Performed	Remarks
31	Check Valves	DHWT-1 DCW inlet, upstream of DHWR piping tie-in	Prevents backflow to domestic cold water piping due to domestic hot water recirculation pump	
32	Domestic Hot Water Expansion Tank (TK-3.1)	Mechanical Room	Allows for expansion of domestic water due to heating by DHWT-1	
33	Domestic Hot Water Recirc Pump (P-3.3)	Water Service Entry Room	Provides recirculation of the water service to the building	
34	Isolation Valve	Pump P-3.3 Suction Piping	Valve used for isolation of pump	Normally Open
35	Strainer	Pump P-3.3 Suction Piping	Provides for removal of particulates from water before passing through pump	Strainer to be cleaned if plugged
36	Check Valve	Pump P-3.3 Discharge Piping	Prevents backflow through pump when not operating	
37	Isolation Valve	Pump P-3.3 Discharge Piping	Valve used for isolation of pump	Normally Open
38	Temperature Sensor (TT)	Domestic hot water piping immediately downstream of DHWT-1	Temperature sensor for water	Temperature of DHW supply to building from DHWT-1
39	Temperature Sensor (TT)	Domestic hot water piping immediately upstream of P-3.3	Temperature sensor for water	Temperature of DHW recirc from building from DHWT-1

4.5 NON-POTABLE WATER (NPW) FOR PROCESS USES

(Refer to Drawing 1/M603, M201, and M202 in Appendix A)

The following table identifies the components Non-Potable Water System for Process Use.

No.	Component	Location	Function Performed	Remarks
1	Thermometers (general)	Various locations throughout piping system	Visual indication of temperature in piping at installed location	Used to verify operation of equipment, valves, and controls
2	Pressure Gauges (general)	Various locations throughout piping system	Visual indication of pressure in piping at installed location	Used to verify operation of equipment, valves, and controls
3	Isolation Valves (general)	Various locations throughout piping system	Valves used for isolation equipment and fixtures	Typically, Normally Open
4	Hot NPW Booster Heat Exchanger (HEX-3.2)	Upper level near stairs into upper level headworks (gridline C:2)	Boosts the temperature of the hot NPW water supply to the Primary Filters (for filter cleaning)	Brazed plate heat exchanger, wall mounted
5	Pressure/Temperature Relief Valve	Discharge side of HEX-3.2	Automatic relief of booster HEX pressure if valve preset limit is exceeded	Normally Closed
6	Isolation Valves	Upstream/downstream of HEX-3.2	Valves used for isolation of the hot NPW booster HEX	Normally Open
7	Hot NPW Expansion Tank (TK-3.2)	Upper level near stairs into upper level headworks (gridline C:2)	Allows for expansion of hot NPW due to	

No.	Component	Location	Function Performed	Remarks
			heating by HEX-3.2	
8	Temperature Sensor (TT)	Hot NPW piping immediately downstream of HEX-3.2	Temperature sensor for water	Temperature of hot NPW supply
9	Flow Switch (FS)	Hot NPW piping immediately downstream of HEX-3.2	Flow indication for hot NPW usage	Indicates need for HEX-3.2 operation to boost hot NPW temperature

4.6 SANITARY SYSTEMS

(Refer to Drawing 1/M603, M201, and M202 in Appendix A)

The following table identifies the components in the building Sanitary systems.

No.	Component	Location	Function Performed	Remarks
1	Duplex sump pumps (P-2.1 & P-2.2)	Lower level headworks sump pit	Sump pit discharge to building sanitary system	Complete with duplex lead/lag control panel and float switches, explosion proof motors
2	Check Valves	Pump P-2.1 & P-2.2 Discharge Piping	Prevents backflow through pump when not operating	
3	Isolation Valves	Pump P-2.1 & P-2.2 Discharge Piping	Valves used for isolation of pumps	Normally Open
4	Duplex sump pumps (P-2.3 & P-2.4)	Sludge trailer room sump pit	Sump pit discharge to building sanitary system	Complete with duplex lead/lag control panel and float switches
5	Check Valves	Pump P-2.3 & P-2.4 Discharge Piping	Prevents backflow through pump when not operating	
6	Isolation Valves	Pump P-2.3 & P-2.4 Discharge Piping	Valves used for isolation of pumps	Normally Open

No.	Component	Location	Function Performed	Remarks
7	Duplex sump pumps (P-2.5 & P-2.6)	DAF tank room sump pit	Sump pit discharge to building sanitary system	Complete with duplex lead/lag control panel and float switches
8	Check Valves	Pump P-2.5 & P-2.6 Discharge Piping	Prevents backflow through pump when not operating	
9	Isolation Valves	Pump P-2.5 & P-2.6 Discharge Piping	Valves used for isolation of pumps	Normally Open

4.7 PLUMBING FIXTURES

(Refer to Drawing M201 and M202 in Appendix A)

The following table identifies the components related to the plumbing fixtures.

No.	Component	Location	Function Performed	Remarks
1	Gravity flow portable eyewash station (EW-1)	"Lower level: Headworks & Sludge Trailer Room	Emergency eyewash station	Wall mounted unit
2	Wash-down hose bibb station & hose (HB-2)	Upper level: Headworks, outside Lab, Polymer Mixing Area"	Wash/spray down station in case of spills or for general cleaning of floors/equipment	Station complete with isolation valve, vacuum breaker, 10m of heavy duty 5/8" hose, and spray nozzle. Water supply is from the building non-potable water system.
3	Washroom fixtures (LV-1, WC-1, SH-1)	"Lower level: Headworks, Sludge Trailer Room, DAF Tank room	Toilet, lavatory, and shower	N/A

4.8 FIRE PROTECTION

(Refer to Drawing M201 and M202 in Appendix A)

The following table identifies the components related to the Fire protection System.

No.	Component	Location	Function Performed	Remarks
1	Fire Extinguisher (DCE-1)	Various locations throughout building, typically adjacent door to exit path	Hand held dry chemical fire extinguisher in case of fire in building	Wall mounted on hanging hook
2	Fire Extinguisher (DCE-2)	Mechanical room and Generator room adjacent doors	Hand held dry chemical fire extinguisher in case of fire in building	Wall mounted on hanging hook

4.9 FUEL OIL SYSTEM

(Refer to Drawing M301 and M604 in Appendix A)

The following table identifies the components related to the Fuel System.

No.	Component	Location	Function Performed	Remarks
1	Isolation Valves (general)	Various locations throughout piping system	Valves used for isolation equipment and fixtures	Typically, Normally Open
2	Exterior Fuel Oil Storage Tank (TK-4.1)	Exterior, gridline A-B:5-6	Storage tank for building fuel oil	Sized for 2 week peak heating load and a 3 day allowance for continuous generator operation
3	2-way Siphon Protection Valve	Exterior FO tank TK-4.1	Anti-siphon protection in case of break in fuel	

			oil piping between exterior tank and fuel oil transfer pumps	
4	Pressure relief valve	At 2-way siphon protection valve	Valve to allow pressure relief from downstream side of siphon valve	Normally Closed
5	Bypass Valve	At 2-way siphon protection valve	Valve to allow 2-way siphon protection valve to be bypassed	Normally Closed
6	Level switch (LC)	In TK-4.1	Low tank level switch	
7	Leak detector (HCD)	TK-4.1 interstitial space	Vacuum switch to indicate to building control system loss of tank interstitial space vacuum and possible leak	
8	Wall mounted Levelometer	Sludge Trailer Room near Fuel Oil Transfer Pumps	Remote level sensing of exterior fuel oil storage tank from inside building	
9	Fuel oil Pre-Filter	Immediately upstream of Fuel Oil Transfer Pumps	Filters fuel oil from exterior storage tank before passing through transfer pumps and	Complete with upstream strainer, fusible link valve, and upstream/downstream isolation valves

			into interior day tanks	
10	Duplex Fuel Oil Transfer Pump Package (P-4.1 & P-4.2)	Sludge Trailer Room on gridline 5 wall	Transfers fuel oil from exterior storage tank (TK-4.1) to interior day tanks (TK-4.2 & TK-4.3)	Lead/Lag operation, controlled by Fuel Oil Transfer Pump Control Panel
11	Fuel Oil Transfer Pump Control Panel	Sludge Trailer Room on gridline 5 wall	Controls filling operation of interior day tanks from exterior tank and operation of fuel oil transfer pumps	Start stop signals from day tank level switches
12	Interior Fuel Oil Day Tank for Boilers & DHWT (TK-4.2)	Mechanical room	Stores fuel oil for use by the heating boilers and domestic hot water tank.	Also allows for warming of fuel oil before use by burners
13	Level switch column (LC)	In TK-4.2	Day tank level switches for tank filling operation.	Level switches for low level alarm, low level (fill start), high level (fill stop), and high level alarm (pump/fill solenoid lockout)
14	Day tank fill solenoid valve (TK-4.2 CV)	On fuel oil supply pipe to TK-4.2 from transfer pumps	Allows fuel oil to flow into tank when opened by fuel oil transfer pump control panel	Normally Closed
15	Pressure relief valve	At TK-4.2 fill solenoid valve	Valve to allow pressure relief from upstream	Normally Closed

			side of tank fill solenoid valve to fuel oil return line to exterior storage tank	
16	Bypass Valve	At TK-4.2 fill solenoid valve	Valve to allow fill solenoid valve to be bypassed	Normally Closed
17	Anti-siphon valve	On fuel oil supply pipe to burners, at day tank TK-4.2	Anti-siphon protection in case of break in fuel oil piping between tank and burners	Normally Closed
18	Interior Fuel Oil Day Tank for Generator (TK-4.3)	Generator Room	Stores fuel oil for use by the generator	Also allows for warming of fuel oil before use
19	Level switch column (LC)	In TK-4.3	Day tank level switches for tank filling operation.	Level switches for low level alarm, low level (fill start), high level (fill stop), and high level alarm (pump/fill solenoid lockout)
20	Day tank fill solenoid valve (TK-4.3 CV)	On fuel oil supply pipe to TK-4.3 from transfer pumps	Allows fuel oil to flow into tank when opened by fuel oil transfer pump control panel	Normally Closed
21	Pressure relief valve	At TK-4.3 fill solenoid valve	Valve to allow pressure relief from upstream side of tank fill solenoid valve to fuel oil return line	Normally Closed

			to exterior storage tank	
22	Bypass Valve	At TK-4.3 fill solenoid valve	Valve to allow fill solenoid valve to be bypassed	Normally Closed
23	Anti-siphon valve	On fuel oil supply pipe to burners, at day tank TK-4.3	Anti-siphon protection in case of break in fuel oil piping between tank and burners	Normally Closed
24	Oil filters	Upstream of each individual burner or engineer	Filters fuel oil from day tank before being burned by oil burning equipment	
25	Fusible link valves	Immediately upstream of associated fuel oil filter	High temperature protection of fuel oil supply. Automatic shut off of fuel oil supply to Boiler B-1 if preset fusible link temperature limit is exceeded	
26	Fuel oil de-aerators	Immediately upstream of each boiler and DHWT burner	Removes entrained air from fuel oil before it reaches the burner	

END OF CHAPTER

CHAPTER 5

5. COMPONENT DETAILS

5.1 GENERAL OVERVIEW

The following tables describe the components of the various systems and provide some basic details and settings. For each table, there are drawings that can be referenced to better understand in what part of the Water Treatment Plant the components are located.

5.2 HEATING SYSTEMS

5.2.1 Heating Plant

(Refer to Drawing M301, M302, M500, M601, and M602 in Appendix A)

The following table identifies the components related to the Hydronic Heating System.

No.	Component	Details	Settings	Remarks
1	Thermometers (general)	Winters TBM-30040-B8	Range (dual): -20°C / 0°F to 120°C / 250°F	Supplier: Wolseley Canada Inc.
2	Pressure Gauges (general)	Winters P9S90201	Range (dual): 0 PSI to 60 PSI / 0 kPa to 414 kPa	Supplier: Wolseley Canada Inc.
3	Isolation Valves (general)	"Ball valves, Red-White Valve Corp.		
4	Manual Air Vent (general)	Butterfly valves, Apollo Valves"	Typically, Normally Open	Supplier: Wolseley Canada Inc.
5	Boiler B-1	Ball valves, Red-White Valve Corp.	Normally closed	Supplier: Wolseley Canada Inc.
6	AAV – Automatic Air Vent & Isolation Valve	Buderus G515/11-K c/w RL50/M burner	Controlled by BAS, modulating burners	Supplier: Methot Controls Inc
7	Boiler safety devices	Watts FV-4M		Supplier: Wolseley Canada Inc.
8	Temperature Sensor (TT)	Integral to boiler package	Hi temp limit, pressure relief, low water cutoff	Supplier: Methot Controls Inc
9	Temperature Sensor (TT)	Refer to Johnson Controls shop drawings and record drawings	N/A	Supplier: Johnson Controls
10	Balancing Valve	Refer to Johnson Controls shop	N/A	Supplier: Johnson Controls

No.	Component	Details	Settings	Remarks
		drawings and record drawings		
11	Isolation Valve	Victaulic TA Series 789 Balancing valves	Flow rate per drawings for boiler heating output	Supplier: Wolseley Canada Inc.
12	Isolation Valve	Butterfly valves, Apollo Valves	Normally Open	Supplier: Wolseley Canada Inc.
13	Strainer	Butterfly valves, Apollo Valves	Normally Open	Supplier: Wolseley Canada Inc.
14	Boiler Circulation Pump (P-1.1)	Strainer, Red-White Valve Corp.		Supplier: Wolseley Canada Inc.
15	Check Valve	Grundfos UPS 100-40 F BF	On/off by BAS, interlocked with boiler, operates on speed 2	Supplier: Wolseley Canada Inc.
16	Isolation Valve	Check valve, Red-White Valve Corp.		Supplier: Wolseley Canada Inc.
17	Boiler B-2	Butterfly valves, Apollo Valves	Normally Open	Supplier: Wolseley Canada Inc.
18	AAV – Automatic Air Vent & Isolation Valve	Buderus G515/11-K c/w RL50/M burner	Controlled by BAS, modulating burners	Supplier: Methot Controls Inc
19	Boiler safety devices	Watts FV-4M		Supplier: Wolseley Canada Inc.
20	Temperature Sensor (TT)	Integral to boiler package	Hi temp limit, pressure relief, low water cutoff	Supplier: Methot Controls Inc
21	Temperature Sensor (TT)	Refer to Johnson Controls shop drawings and record drawings	N/A	Supplier: Johnson Controls
22	Balancing Valve	Refer to Johnson Controls shop drawings and record drawings	N/A	Supplier: Johnson Controls
23	Isolation Valve	Victaulic TA Series 789 Balancing valves	Flow rate per drawings for boiler heating output	Supplier: Wolseley Canada Inc.
24	Isolation Valve	Butterfly valves, Apollo Valves	Normally Open	Supplier: Wolseley Canada Inc.
25	Strainer	Butterfly valves, Apollo Valves	Normally Open	Supplier: Wolseley Canada Inc.
26	Boiler Circulation Pump (P-1.2)	Strainer, Red-White Valve Corp.		Supplier: Wolseley Canada Inc.

No.	Component	Details	Settings	Remarks
27	Check Valve	Grundfos UPS 100-40 F BF	On/off by BAS, interlocked with boiler, operates on speed 2	Supplier: Wolseley Canada Inc.
28	Isolation Valve	Check valve, Red-White Valve Corp.		Supplier: Wolseley Canada Inc.
29	Air Separator & Automatic Air Vent (AAV)	Butterfly valves, Apollo Valves	Normally Open	Supplier: Wolseley Canada Inc.
30	Expansion Tank TK-1.1 & TK-1.2	Armstrong VAS-4		Supplier: Wolseley Canada Inc.
31	Pressure Sensor (PS)	Amtrol 130LBC		Supplier: Wolseley Canada Inc.
32	Glycol Fill System P-1.5	Refer to Johnson Controls shop drawings and record drawings	N/A	Supplier: Johnson Controls
33	Check Valve	Axiom Industries SF-100		Supplier: Specified Technical Sales Ltd.
34	Isolation Valve	Check valve, Red-White Valve Corp.		Supplier: Wolseley Canada Inc.
35	Isolation Valves	Ball valve, Red-White Valve Corp.	Normally Open	Supplier: Wolseley Canada Inc.
36	Strainers	Butterfly valves, Apollo Valves	Normally Open	Supplier: Wolseley Canada Inc.
37	Heating Water Circulation Pumps (P-1.3 & P-1.4)	Strainer, Red-White Valve Corp.		Supplier: Wolseley Canada Inc.
38	Check Valves	Grundfos PACO 25709VL	VFD driven motors, speed controlled by BAS	Supplier: Wolseley Canada Inc.
39	Isolation Valves	Check valve, Red-White Valve Corp.		Supplier: Wolseley Canada Inc.
40	Chemical Pot Feeder	Butterfly valves, Apollo Valves	Normally Open	Supplier: Wolseley Canada Inc.
41	Sidestream Filter Assembly	Specified Technical Sales STS-8		Supplier: Specified Technical Sales Ltd.
42	Temperature Sensor (TT)	Specified Technical Sales PN165 HMS-10A filter housing & Filter Mate Flow Indicator		Supplier: Specified Technical Sales Ltd.
43	Temperature Sensor (TT)	Refer to Johnson Controls shop	N/A	Supplier: Johnson Controls

No.	Component	Details	Settings	Remarks
		drawings and record drawings		

5.2.2 Heating Systems – Terminal Heating

(Refer to Drawing M301, M302, M601, and 2/M602 in Appendix A)

The following table identifies the components related to terminal heating devices.

No.	Component	Details	Settings	Remarks
1	Isolation Valves (general)	"Ball valves, Red-White Valve Corp.		
2	Manual Air Vent (general)	Butterfly valves, Apollo Valves"	Typically, Normally Open	Supplier: Wolseley Canada Inc.
3	Drain Valve (general)	Ball valves, Red-White Valve Corp.	Normally closed	Supplier: Wolseley Canada Inc.
4	Balancing Valve (general)	Ball valves, Red-White Valve Corp.	Normally closed	Supplier: Wolseley Canada Inc.
5	Space Thermostat (T)	Victaulic TA Series 786/787/789 Balancing valves	Flow rate per drawings for equipment heating output	Supplier: Wolseley Canada Inc.
6	Hydronic Unit Heater	Refer to Johnson Controls shop drawings and record drawings	"10°C for Unit heaters	
7	Hydronic Cabinet Unit Heater	18°C for baseboard radiation"	Supplier: Johnson Controls	
8	Hydronic Baseboard Radiation	Engineered Air H-1, H-2, V-1,	N/A	Supplier: Engineered Air

5.2.3 Heating Systems – Air Handling Units & Heat Exchangers

(Refer to Drawing M301, M302, M601, and 2/M602 in Appendix A)

The following table identifies the components related to heating portions of the Air Handling Units and Heat Exchangers.

No.	Component	Details	Settings	Remarks
1	Thermometers (general)	Winters TBM-30040-B8	Range (dual): -20°C / 0°F to 120°C / 250°F	Supplier: Wolseley Canada Inc.
2	Isolation Valves (general)	"Ball valves, Red-White Valve Corp.		
3	Manual Air Vent (general)	Butterfly valves, Apollo Valves"	Typically, Normally Open	Supplier: Wolseley Canada Inc.
4	Drain Valve (general)	Ball valves, Red-White Valve Corp.	Normally closed	Supplier: Wolseley Canada Inc.
5	Balancing Valve (general)	Ball valves, Red-White Valve Corp.	Normally closed	Supplier: Wolseley Canada Inc.
6	Pre-heat coil control valve (HRV-1)	Victaulic TA Series 786/787/789 Balancing valves	Flow rate per drawings for equipment heating output	Supplier: Wolseley Canada Inc.
7	Re-heat coil control valve (HRV-1)	Refer to Johnson Controls shop drawings and record drawings	Normally open, modulates to maintain coil SAT	Supplier: Johnson Controls
8	Pre-heat coil pump (P-1.6 for AHU-2)	Refer to Johnson Controls shop drawings and record drawings	Normally open, modulates to maintain coil SAT	Supplier: Johnson Controls
9	Pre-heat coil control valve (AHU-2)	Grundfos UPS 40-80/4 F	On/off by BAS, operates on speed 2	Supplier: Wolseley Canada Inc.
10	Re-heat coil control valve (AHU-2)	Refer to Johnson Controls shop drawings and record drawings	Normally open, modulates to maintain coil SAT	Supplier: Johnson Controls
11	Heating coil control valve (AHU-3)	Refer to Johnson Controls shop drawings and record drawings	Normally open, modulates to maintain coil SAT	Supplier: Johnson Controls
12	Heat Exchanger control valve (HEX-3.1)	Refer to Johnson Controls shop drawings and record drawings	Normally open, modulates to maintain coil SAT	Supplier: Johnson Controls
13	Heat Exchanger control valve (HEX-3.2)	Refer to Johnson Controls shop drawings and record drawings	Normally closed, modulates to maintain HEX cold side discharge temperature	Supplier: Johnson Controls

5.3 VENTILATION SYSTEMS

5.3.1 Ventilation System - AHU-2 (Non-Classified Areas)

(Refer to Drawing M401, M402, M601, and 2/M602 in Appendix A)

The following table identifies the components related to the AHU-2 System

No.	Component	Details	Settings	Remarks
1	Outside air damper (CD-1)	Tamco 9000 BF SCT	Two-position, open when AHU operating, closed when AHU is not	Supplier: Cometal STD
2	Exhaust air damper (CD-2)	Tamco 9000 BF SCT	Two-position, open when AHU operating, closed when AHU is not	Supplier: Cometal STD
3	***Outdoor Air / Supply Air side of Unit (in order)***	Engineered Air LM8/C/CH/RA/MV	N/A	Supplier: Engineered Air
4	Outside air temperature sensor	Integral to AHU (supplied with unit), refer to AHU shop drawings	N/A	
5	Pre-Filters	Integral to AHU (supplied with unit), refer to AHU shop drawings	N/A	
6	Pre-filter differential pressure sensor	Integral to AHU (supplied with unit), refer to AHU shop drawings	N/A	
7	Pre-heat Coil	Integral to AHU (supplied with unit), refer to AHU shop drawings	DAT: -10°C	
8	Pre-heat coil temperature sensor	Integral to AHU (supplied with unit), refer to AHU shop drawings	N/A	
9	Face and Bypass Dampers	Integral to AHU (supplied with unit), refer to AHU shop drawings	Normally closed, forcing flow through heat recovery coil	
10	Heat Recovery Core (supply side)	Integral to AHU (supplied with unit), refer to AHU shop drawings	N/A	
11	Heat recovery supply air temperature sensor	Integral to AHU (supplied with unit),	N/A	

No.	Component	Details	Settings	Remarks
		refer to AHU shop drawings		
12	Final Filters	Integral to AHU (supplied with unit), refer to AHU shop drawings	N/A	
13	Final filter differential pressure sensor	Integral to AHU (supplied with unit), refer to AHU shop drawings	Filter manufacturer recommended max filter pressure drop	
14	Re-heat Coil	Integral to AHU (supplied with unit), refer to AHU shop drawings	DAT: 10°C	
15	Supply Fan	Integral to AHU (supplied with unit), refer to AHU shop drawings	VFD driven motor for 3 ACH and 6 ACH operation	
16	Supply air temperature sensor	Integral to AHU (supplied with unit), refer to AHU shop drawings	N/A	
17	Supply air freeze-stat	Integral to AHU (supplied with unit), refer to AHU shop drawings	5°C	
18	Supply air flow rate sensor	Integral to AHU (supplied with unit), refer to AHU shop drawings	N/A	
19	***Return Air / Exhaust Air side of Unit (in order)***			
20	Return air filter	Integral to AHU (supplied with unit), refer to AHU shop drawings	N/A	
21	Return filter differential pressure sensor	Integral to AHU (supplied with unit), refer to AHU shop drawings	Filter manufacturer recommended max filter pressure drop	
22	Return air temperature sensor	Integral to AHU (supplied with unit), refer to AHU shop drawings	N/A	
23	Heat Recovery Core (exhaust side)	Integral to AHU (supplied with unit),	N/A	

No.	Component	Details	Settings	Remarks
		refer to AHU shop drawings		
24	Heat recovery exhaust air temperature sensor	Integral to AHU (supplied with unit), refer to AHU shop drawings	N/A	
25	Exhaust fan	Integral to AHU (supplied with unit), refer to AHU shop drawings	VFD driven motor for 3 ACH and 6 ACH operation	
26	Exhaust air flow rate sensor	Integral to AHU (supplied with unit), refer to AHU shop drawings	N/A	

5.3.2 Ventilation System - AHU-3 (Headworks)

(Refer to Drawing M401, M402, M601, and 2/M602 in Appendix A)

The following table identifies the components related to the AHU-3 System

No.	Component	Details	Settings	Remarks
1	Outside air damper	Tamco 9000 BF SCT	Two-position, open when AHU operating, closed when AHU is not	Supplier: Cometal STD
2	Exhaust air damper	Tamco 9000 BF SCT	Two-position, open when AHU operating, closed when AHU is not	Supplier: Cometal STD
3	***Outdoor Air / Supply Air side of Unit (in order)***	Existing AHU - Ingenia CAH-2SP-SF-CD-108/81.60-1	N/A	Supplier: Unknown
4	Pre-Filters			
5	Pre-filter differential pressure sensor	Refer to Johnson Controls shop drawings and record drawings	Filter manufacturer recommended max filter pressure drop	Supplier: Johnson Controls
6	Outside air temperature sensor	Refer to Johnson Controls shop drawings and record drawings	N/A	Supplier: Johnson Controls
7	Face and Bypass Dampers	Integral to AHU (supplied with unit), refer to AHU shop drawings	Normally closed, forcing flow through heat recovery coil	

8	Heat Recovery Core (supply side)	Integral to AHU (supplied with unit), refer to AHU shop drawings	N/A	
9	Heat recovery supply air temperature sensor	Refer to Johnson Controls shop drawings and record drawings	N/A	Supplier: Johnson Controls
10	Heating Coil	Integral to AHU (supplied with unit), refer to AHU shop drawings	DAT 10°C	
11	Supply Fan	Integral to AHU (supplied with unit), refer to AHU shop drawings	Two speed motor for 6 ACH and 12 ACH operation	
12	Supply air temperature sensor	Refer to Johnson Controls shop drawings and record drawings	N/A	Supplier: Johnson Controls
13	Supply air freeze-stat	Refer to Johnson Controls shop drawings and record drawings	5°C	Supplier: Johnson Controls
14	Supply air flow rate sensor	Refer to Johnson Controls shop drawings and record drawings	N/A	Supplier: Johnson Controls
15	***Return Air / Exhaust Air side of Unit (in order)***			
16	Return air temperature sensor	Refer to Johnson Controls shop drawings and record drawings	N/A	Supplier: Johnson Controls
17	Return air filter	Integral to AHU (supplied with unit), refer to AHU shop drawings	N/A	
18	Return filter differential pressure sensor	Refer to Johnson Controls shop drawings and record drawings	Filter manufacturer recommended max filter pressure drop	Supplier: Johnson Controls
19	Heat Recovery Core (exhaust side)	Integral to AHU (supplied with unit), refer to AHU shop drawings	N/A	

20	Heat recovery exhaust air temperature sensor	Refer to Johnson Controls shop drawings and record drawings	N/A	Supplier: Johnson Controls
21	Exhaust fan	Integral to AHU (supplied with unit), refer to AHU shop drawings	Two speed motor for 6 ACH and 12 ACH operation	
22	Exhaust air flow rate sensor	Refer to Johnson Controls shop drawings and record drawings	N/A	Supplier: Johnson Controls

5.3.3 Ventilation System - HRV-1 (Office, Lab, and Washroom)

(Refer to Drawing M401, M402, M601, and 2/M602 in Appendix A)

The following table identifies the components related to the HRV-1 System

No.	Component	Details	Settings	Remarks
1	Outside air damper (CD-8)	Tamco 9000 BF SCT	Two-position, open when HRV operating, closed when HRV is not	Supplier: Cometal STD
2	Pre-Filters	Tri-Dim Ultra Pleat Filter		Supplier: Tri-Dim Filter Corporation
3	Pre-heat Coil (PHC-1)	Engineered Air Air Coil	DAT: -10°C	Supplier: Engineered Air
4	Pre-heat coil temperature sensor	Refer to Johnson Controls shop drawings and record drawings	N/A	Supplier: Johnson Controls
5	Heat Recovery Ventilator (HRV-1)	Venmar Constructo 2.0ES	N/A	Supplier: EMCO
6	Final Filters	Tri-Dim Ultra Pleat Filter		Supplier: Tri-Dim Filter Corporation
7	Re-heat Coil (RHC-1)	Engineered Air Air Coil	DAT: 18°C	Supplier: Engineered Air
8	Supply air temperature sensor	Refer to Johnson Controls shop drawings and record drawings	N/A	Supplier: Johnson Controls
9	Exhaust air backdraft damper	Tamco 7000	Open when HRV operating	Supplier: Cometal STD

5.3.4 Ventilation System - Cooling Systems

(Refer to Drawing M401, M402, M601, and 2/M602 in Appendix A)

The following table identifies the components related to the Cooling Ventilation Systems

No.	Component	Details	Settings	Remarks
1	Cooling Fan (CF-1)	Greenheck SQ-110-VG	N/A	Supplier: EH Price Limited
2	Space Thermostat for CF-1 (T)	Refer to Johnson Controls shop drawings and record drawings	24°C	Supplier: Johnson Controls
3	Outside air damper (CD-3)	Tamco 9000 BF SCT	Normally closed, modulates towards open	Supplier: Cometal STD
4	Return air damper (CD-4)	Tamco 9000 BF SCT	Normally open, modulates towards closed	Supplier: Cometal STD
5	Pre-Filter (CF-1)	Tri-Dim Ultra Pleat Filter		Supplier: Tri-Dim Filter Corporation
6	Pre-filter differential pressure sensor (CF-1)	Refer to Johnson Controls shop drawings and record drawings	Filter manufacturer recommended max filter pressure drop	Supplier: Johnson Controls
7	Supply air temperature sensor (CF-1)	Refer to Johnson Controls shop drawings and record drawings	N/A	Supplier: Johnson Controls
8	Supply air freeze-stat (CF-1)	Refer to Johnson Controls shop drawings and record drawings	5°C	Supplier: Johnson Controls
9	Cooling Fan (CF-2)	Greenheck SQ-110-VG	N/A	Supplier: EH Price Limited
10	Space Thermostat for CF-2 (T)	Refer to Johnson Controls shop drawings and record drawings	24°C	Supplier: Johnson Controls
11	Outside air damper (CD-5)	Tamco 9000 BF SCT	Normally closed, modulates towards open	Supplier: Cometal STD
12	Return air damper (CD-6)	Tamco 9000 BF SCT	Normally open, modulates towards closed	Supplier: Cometal STD

No.	Component	Details	Settings	Remarks
13	Exhaust air damper (CD-7)	Tamco 9000 BF SCT	Normally closed, modulates towards open	Supplier: Cometal STD
14	Pre-Filter (CF-2)	Tri-Dim Ultra Pleat Filter		Supplier: Tri-Dim Filter Corporation
15	Pre-filter differential pressure sensor (CF-2)	Refer to Johnson Controls shop drawings and record drawings	Filter manufacturer recommended max filter pressure drop	Supplier: Johnson Controls
16	Supply air temperature sensor (CF-2)	Refer to Johnson Controls shop drawings and record drawings	N/A	Supplier: Johnson Controls
17	Supply air freeze-stat (CF-2)	Refer to Johnson Controls shop drawings and record drawings	5°C	Supplier: Johnson Controls
18	Temperature Controller and space temperature sensor	Refer to Johnson Controls shop drawings and record drawings	30°C	Supplier: Johnson Controls
19	Outside air damper (CD-11)	Tamco 9000 BF SCT	Normally closed, two position, opens on generator startup	Supplier: Cometal STD
20	Outside air damper (CD-12)	Tamco 9000 BF SCT	Normally closed, modulates towards open	Supplier: Cometal STD
21	Return air damper (CD-13)	Tamco 9000 BF SCT	Normally open, modulates towards closed	Supplier: Cometal STD
22	Exhaust air damper (CD-14)	Tamco 9000 BF SCT	Normally closed, modulates towards open	Supplier: Cometal STD

5.4 DOMESTIC WATER SYSTEMS

(Refer to Drawings 1/M603, M201, and M202 in Appendix A)

The following table identifies the components related to the Domestic Water System.

No.	Component	Details	Settings	Remarks
1	Thermometers (general)	Winters TBM-30040-B8	Range (dual): -20°C / 0°F to 120°C / 250°F	Supplier: Wolseley Canada Inc.
2	Pressure Gauges (general)	Winters P9S90203	Range (dual): 0 PSI to 160 PSI / 0 kPa to 1103 kPa	Supplier: Wolseley Canada Inc.
3	Isolation Valves (general)	"Ball valves, Red-White Valve Corp.		
4	Water Service Entry Isolation Valve	Butterfly valves, Apollo Valves"	Typically, Normally Open	Supplier: Wolseley Canada Inc.
5	Water Service Recirc Isolation Valve	Butterfly valves, Apollo Valves	Normally Open	Supplier: Wolseley Canada Inc.
6	Temperature Sensor (TT)	Refer to Johnson Controls shop drawings and record drawings	N/A	Supplier: Johnson Controls
7	Temperature Sensor (TT)	Refer to Johnson Controls shop drawings and record drawings	N/A	Supplier: Johnson Controls
8	Water Service Recirc Pumps (P-3.1 & P-3.2)	Grundfos TP 40-40/4 B	On/off by BAS	Supplier: Wolseley Canada Inc.
9	Isolation Valves	Ball valves, Red-White Valve Corp.	Normally Open	Supplier: Wolseley Canada Inc.
10	Strainers	Strainer, Red-White Valve Corp.		Supplier: Wolseley Canada Inc.
11	Check Valves	Check valve, Red-White Valve Corp.		Supplier: Wolseley Canada Inc.
12	Isolation Valves	Ball valves, Red-White Valve Corp.	Normally Open	Supplier: Wolseley Canada Inc.
13	Water Service Heat Injection Pumps (P-3.4 & P-3.5)	Grundfos UPS 40-40 F B	On/off by BAS, operates on speed 3	Supplier: Wolseley Canada Inc.

No.	Component	Details	Settings	Remarks
14	Isolation Valves	Ball valves, Red-White Valve Corp.	Normally Open	Supplier: Wolseley Canada Inc.
15	Check Valves	Check valve, Red-White Valve Corp.		Supplier: Wolseley Canada Inc.
16	Isolation Valves	Ball valves, Red-White Valve Corp.	Normally Open	Supplier: Wolseley Canada Inc.
17	Water Service Heat Injection Heat Exchanger (HEX-3.1)	Danfos B3-052-70-H		Supplier: Specified Technical Sales Ltd.
18	Pressure/Temperature Relief Valve			
19	Water meter	See process		Refer to process for meter details
20	Isolation Valves	Butterfly valves, Apollo Valves	Normally Open	Supplier: Wolseley Canada Inc.
21	Bypass Valve	Butterfly valves, Apollo Valves	Normally Closed	Supplier: Wolseley Canada Inc.
22	Reduced pressure backflow preventer (RPBF-1)	Watts 957N, 75mmØ		Supplier: Wolseley Canada Inc.
23	Reduced pressure backflow preventer (RPBF-2)	Watts LF909M1, 50mmØ		Supplier: Wolseley Canada Inc.
24	Reduced pressure backflow preventer (RPBF-3)	Watts LF909M1, 32mmØ		Supplier: Wolseley Canada Inc.
25	Pressure reducing valve	Watts LFM115, 75mmØ	Set to 413 kPa	Supplier: Wolseley Canada Inc.
26	Pressure reducing valve	Watts LF25AUB-Z3, 50mmØ	Set to 413 kPa	Supplier: Wolseley Canada Inc.
27	Isolation Valves	Butterfly valves, Apollo Valves	Normally Open	Supplier: Wolseley Canada Inc.
28	Bypass Valve	Butterfly valves, Apollo Valves	Normally Open	Supplier: Wolseley Canada Inc.
29	Domestic Water Heater (DHWH-1)	AO Smith COF-315	60°C	Supplier: Wolseley Canada Inc.
30	Isolation Valves	Ball valves, Red-White Valve Corp.	Normally Open	Supplier: Wolseley Canada Inc.
31	Check Valves	Check valve, Red-White Valve Corp.		Supplier: Wolseley Canada Inc.
32	Domestic Hot Water Expansion Tank (TK-3.1)	Amtrol ST-42V		Supplier: Wolseley Canada Inc.
33	Domestic Hot Water Recirc Pump (P-3.3)	Grundfos ALPHA2 15-55SF	On/off by BAS, Integral VSD set for	Supplier: Wolseley Canada Inc.

No.	Component	Details	Settings	Remarks
			required flow rate	
34	Isolation Valve	Ball valves, Red-White Valve Corp.	Normally Open	Supplier: Wolseley Canada Inc.
35	Strainer	Strainer, Red-White Valve Corp.		Supplier: Wolseley Canada Inc.
36	Check Valve	Check valve, Red-White Valve Corp.		Supplier: Wolseley Canada Inc.
37	Isolation Valve	Ball valves, Red-White Valve Corp.	Normally Open	Supplier: Wolseley Canada Inc.
38	Temperature Sensor (TT)	Refer to Johnson Controls shop drawings and record drawings	N/A	Supplier: Johnson Controls
39	Temperature Sensor (TT)	Refer to Johnson Controls shop drawings and record drawings	N/A	Supplier: Johnson Controls

5.5 NON-POTABLE WATER (NPW) FOR PROCESS USES

(Refer to Drawing 1/M603, M201, and M202 in Appendix A)

The following table identifies the components Non-Potable Water System for Process Use.

No.	Component	Details	Settings	Remarks
1	Thermometers (general)	Winters TBM-30040-B8	Range (dual): -20°C / 0°F to 120°C / 250°F	Supplier: Wolseley Canada Inc.
2	Pressure Gauges (general)	Winters P9S90203	Range (dual): 0 PSI to 160 PSI / 0 kPa to 1103 kPa	Supplier: Wolseley Canada Inc.
3	Isolation Valves (general)	Ball valves, Red-White Valve Corp.	Typically, Normally Open	Supplier: Wolseley Canada Inc.
4	Hot NPW Booster Heat Exchanger (HEX-3.2)	HTG HTG095DW-30		Supplier: Specified Technical Sales Ltd.
5	Pressure/Temperature Relief Valve			

No.	Component	Details	Settings	Remarks
6	Isolation Valves	Ball valves, Red-White Valve Corp.	Typically, Normally Open	Supplier: Wolseley Canada Inc.
7	Hot NPW Expansion Tank (TK-3.2)	Amtrol ST-8		Supplier: Wolseley Canada Inc.
8	Temperature Sensor (TT)	Refer to Johnson Controls shop drawings and record drawings	N/A	Supplier: Johnson Controls
9	Flow Switch (FS)	Refer to Johnson Controls shop drawings and record drawings	N/A	Supplier: Johnson Controls

5.6 SANITARY SYSTEMS

(Refer to Drawing 1/M603, M201, and M202 in Appendix A)

The following table identifies the components in the building Sanitary systems.

No.	Component	Details	Settings	Remarks
1	Duplex sump pumps (P-2.1 & P-2.2)	Pentair Hydromatic SPX50	Controlled by level switches in sump	Explosion proof motors
2	Check Valves	Flomatic 208T ball check valve	Normally closed unless pump(s) operating	
3	Isolation Valves	PVC union ball valve	Normally open	
4	Duplex sump pumps (P-2.3 & P-2.4)	Pentair Hydromatic SK60	Controlled by level switches in sump	
5	Check Valves	Flomatic 208T ball check valve	Normally closed unless pump(s) operating	
6	Isolation Valves	PVC union ball valve	Normally open	
7	Duplex sump pumps (P-2.5 & P-2.6)	Pentair Hydromatic SK60	Controlled by level switches in sump	

No.	Component	Details	Settings	Remarks
8	Check Valves	Flomatic 208T ball check valve	Normally closed unless pump(s) operating	
9	Isolation Valves	PVC union ball valve	Normally open	

5.7 PLUMBING FIXTURES

(Refer to Drawing M201 and M202 in Appendix A)

The following table identifies the components related to the plumbing fixtures.

No.	Component	Details	Settings	Remarks
1	Gravity flow portable eyewash station (EW-1)	Haws Model 7501	Requires addition of preservative / water treatment media on regular intervals to ensure solution is sterile	Supplier: Deschenes Group
2	Wash-down hose bibb station & hose (HB-2)	Charland Thermojet NL-553-BV-VB-41-12X12-30X063-RGT70S	N/A	Supplier: Deschenes Group
3	Washroom fixtures (LV-1, WC-1, SH-1)		N/A	Supplier: Deschenes Group

5.8 FIRE PROTECTION

(Refer to Drawing M201 and M202 in Appendix A)

The following table identifies the components related to the Fire protection System.

No.	Component	Details	Settings	Remarks
1	Fire Extinguisher (DCE-1)	Strike First WBDL-ABC340LV, 5lb Multi-purpose Dry Chemical Extinguisher	N/A	Supplier: Deschenes Group
2	Fire Extinguisher (DCE-2)	Strike First WBDL-ABC10, 10lb Multi-purpose Dry Chemical Extinguisher	N/A	Supplier: Deschenes Group

5.9 FUEL OIL SYSTEM

(Refer to Drawing M301 and M604 in Appendix A)

The following table identifies the components related to the Fuel System.

No.	Component	Details	Settings	Remarks
1	Isolation Valves (general)	Ball valves, Red-White Valve Corp.	Typically, Normally Open	Supplier: Wolseley Canada Inc.
2	Exterior Fuel Oil Storage Tank (TK-4.1)	Steelcraft Clemmer 25,000L storage tank, double walled, vacuum monitored		Supplier: Steelcraft
3	2-way Siphon Protection Valve	Parker Hannifin Corporation 7321GBN99N00	Normally Closed	Supplier: Johnson Controls
4	Pressure relief valve			
5	Bypass Valve	Ball valves, Red-White Valve Corp.	Normally Closed	Supplier: Wolseley Canada Inc.
6	Level switch (LC)	Gems Series LS800		Supplier: Wolseley Canada Inc.
7	Leak detector (HCD)	Refer to Johnson Controls shop drawings and record drawings		Supplier: Johnson Controls
8	Wall mounted Levelometer	Ktech Midget Model 277		Supplier: Wolseley Canada Inc.
9	Fuel oil Pre-Filter	Canadian General Filters Ltd		Supplier: Wolseley Canada Inc.
10	Duplex Fuel Oil Transfer Pump Package (P-4.1 & P-4.2)	Viking Duplex Fuel Oil Pump Package SG-40510-DUP-O	On/off by control panel	Supplier: Wolseley Canada Inc.
11	Fuel Oil Transfer Pump Control Panel	Viking Duplex Fuel Oil Pump Control Panel CPPA05-180581	Operates by floats in day tanks	Supplier: Wolseley Canada Inc.
12	Interior Fuel Oil Day Tank for Boilers & DHWT (TK-4.2)	Steelcraft Clemmer 680L storage tank, double walled		Supplier: Steelcraft
13	Level switch column (LC)	Gems Series LS800		Supplier: Wolseley Canada Inc.
14	Day tank fill solenoid valve (TK-4.2 CV)	Parker Hannifin Corporation 73218BN64N00	Normally Closed	Supplier: Johnson Controls
15	Pressure relief valve			

16	Bypass Valve	Ball valves, Red-White Valve Corp.	Normally Closed	Supplier: Wolseley Canada Inc.
17	Anti-siphon valve			
18	Interior Fuel Oil Day Tank for Generator (TK-4.3)	Steelcraft Clemmer 680L storage tank, double walled		Supplier: Steelcraft
19	Level switch column (LC)	Gems Series LS800		Supplier: Wolseley Canada Inc.
20	Day tank fill solenoid valve (TK-4.3 CV)	Parker Hannifin Corporation 73218BN64N00	Normally Closed	Supplier: Johnson Controls
21	Pressure relief valve			
22	Bypass Valve	Ball valves, Red-White Valve Corp.	Normally Closed	Supplier: Wolseley Canada Inc.
23	Anti-siphon valve			
24	Oil filters	Canadian General Filters Ltd		Supplier: Wolseley Canada Inc.
25	Fusible link valves	Firomatic	N/A	
26	Fuel oil de-aerators	Westwood Products Tigerloop	N/A	

END OF CHAPTER 5

CHAPTER 6

6. OPERATING PROCEDURES

6.1 GENERAL

The operations portion of this manual should be read in conjunction with Chapter 6 of the Process and Electrical, Instrumentation and Controls Operations and Maintenance Manuals. The operating procedures described in this section will relate to the WWTP Mechanical Controls Systems

6.2 BUILDING HVAC CONTROL SYSTEM

Refer to **Appendix H** for building HVAC controls sequences of operation. Additionally, refer to Controls System As-builts as found in the contractor assembled O&M manuals.

END OF CHAPER 6

CHAPTER 7

7. MAINTENANCE PROCEDURES AND SERVICE INFORMATION

7.1 GENERAL

To ensure uninterrupted use, equipment should be regularly inspected, tested, and proper repairs made and recorded. The objective is to minimize equipment operating problems and prevent failures by making minor or necessary repairs before major difficulties occur. The importance of record keeping cannot be over-emphasized. Good maintenance protects the owner's interest with manufacturer warranties, continuity, or maintenance despite staff turnovers and equipment reliability track record.

Environmental and operating conditions are key elements affecting proper and reliable operation of equipment. Costly repairs can be minimized if the following items are attended to:

KEEP IT CLEAN

KEEP IT TIGHT

7.1.1 Keep It Clean

Day-to day accumulation of normal atmospheric particles, lint, metallic particles form mechanical equipment cause problems with equipment over a long period of time. An accumulation affects equipment reliability and operating life. ALL equipment should be regularly cleaned.

7.1.2 Keep It Tight

All contactors and control devices operate with high speed movement. This motion creates vibration that can loosen hardware and other parts. External vibration from equipment may cause the loosening of hardware and connections in any equipment. All hardware and connections should be tightened regularly. This simple procedure takes only a small amount of time and can save hours of searching for intermittent problems. All rotating equipment such as motors are affected by vibrations. This can cause alignment problems, which can result in bearing failures.

7.1.3 Renewal Parts

Availability of parts can be a major problem these days as distributors are keeping very low inventories in a move to economize. This may make any part a long delivery item. For this reason local distributors should be contacted and parts availability assessed.

Any critical part affecting the reliability of the system should be ordered, recorded and stored by the maintenance department.

7.1.4 Parts and Equipment Ordering Procedure

During the first year of operation, the Contractor should be contacted for any replacement parts required. This will ensure that parts covered by warranty will be replaced under warranty. Failure to contact the Contractor may result in difficulties in obtaining warranty replacement.

Following the first year of operation, it is recommended that the Contractor also be contacted as many of the suppliers have a wholesale only policy. If it is necessary to purchase parts directly from the original supplier, the following information is required.

Make

Model No.

Year of Installation

Installing Contractor

Description of Part Required (i.e. Fan Bearing)

Part No. if Available

When quoting a part number contained in manufacturer's catalogue, always provide the date of the catalogue you are referring to, as these numbers are often subject to change. The equipment supplier will have the latest edition of the manufacturer's catalogue.

If the original supplier is no longer in business, contact the contractor who will be able to suggest an alternate source of supply.

7.1.5 Scheduled Preventive Maintenance Program

Scheduled preventive maintenance is an effective means to improve services from systems and equipment. Where failure of equipment can result in shutdown, scheduled preventive maintenance is an economical alternative.

<u>Causes of Equipment Failure</u>

An effective maintenance program will attempt to remove or reduce causes of equipment failure. Common failure initiating causes are:

- Loose and broken belts
- Misaligned pulleys
- Dirty or plugged filters
- Dirty or plugged coils

- Worn bearings
- Improper lubrication and oiling or lack of
- Persistent overloading
- Above normal temperatures
- Below normal temperatures
- Obstruction of ventilation by foreign objects or material
  (blockage of air, dirt on components etc.)
- Normal deterioration from age
- Severe weather conditions

The scheduled preventive maintenance suggestions presented will be applicable to most equipment, but all of the suggestions given in any one section may not be applicable to the particular mechanical component being maintained. Most of the work may be done by the building operator but some may have to be left to the discretion of the building operator.

When equipment repair is necessary, please refer to the Manufacturer Data section provided in this manual. The frequency, which the tasks should be done as indicated.

Most maintenance can be done by average personnel, with a minimum need for specialized service.

7.1.6 Maintenance Legend

D		Daily
W		Weekly
M		Monthly
SA		Semi-Annually
A		Annually
PMI		Per Manufacturer's Instructions
AN		As Necessary

7.2 GENERAL MAINTENANCE

Maintenance to be conducted as per recommendations of components suppliers.

Item	Maintenance Operations	Inspection Frequency	Remarks
Valves	Check for proper operation	A	
Actuated Valves	Follow maintenance schedule in the manufacturer's manual	PMI	
Control Dampers	Follow maintenance schedule in the manufacturer's manual	PMI	
Filters	Maintenance as required by the list in the manufacturer's manual	PMI	
Pumps	Follow maintenance schedule in the manufacturer's manual	PMI	
Fans	Follow maintenance schedule in the manufacturer's manual	PMI	
Air Handling Units	Follow maintenance schedule in the manufacturer's manual	PMI	
Boilers	Follow maintenance schedule in the manufacturer's manual	PMI	
Domestic Hot Water Heaters	Follow maintenance schedule in the manufacturer's manual	PMI	
Heat Exchangers	Follow maintenance schedule in the manufacturer's manual	PMI	
Unit Heaters & Cabinet Unit Heaters	Follow maintenance schedule in the manufacturer's manual	PMI	
Backflow Preventers	Follow maintenance schedule in the manufacturer's manual	PMI	
Fuel oil tanks	Follow maintenance schedule in the manufacturer's manual	PMI	
Tanks	Follow maintenance schedule in the manufacturer's manual	PMI	

7.3 MAINTENANCE SCHEDULE

Maintenance to be conducted as per recommendations of components suppliers. **Appendix C** provide a suggested maintenance schedule.

7.4 MAINTENANCE MANUALS

For all maintenance and inspection schedules, please refer to the manuals provided by component suppliers and manufacturers (**Appendix D**) and as shown in maintenance schedule (**Appendix C**), shop drawings (**Appendix B**) and contact service information (**Appendix F**).

Maintenance manuals of the following major mechanical components are provided in **Appendix D**:

- Air Handling Unit, AHU-2 (new unit)
- Heat Recovery Ventilator, HRV-1
- Fans
- Pumps
- Boilers and Burners
- Domestic Hot Water Heater
- Building HVAC Control System

7.5 SPARE PARTS LIST

Spare part list is provided in **Appendix E**.

END OF CHAPTER 7

CHAPTER 8

8. TESTING AND CERTIFICATION

Testing records, certificates and warranties are provided in **Appendix G**.

CHAPTER 9

9. CONTACT SERVICE INFORMATION

Owner, consulting engineer, contractors and main suppliers contact service information is grouped in **Appendix F**.

APPENDIX

APPENDIX A

AS-BUILT DRAWINGS

PROVIDED IN A SPEARATE FOLDER

APPENDIX B

APPROVED SHOP DRAWINGS

REVIEWED BY CONTRACTOR
Kudlik Construction Ltd.
Alexandra Rousseau P.Eng
DATE: Mai 29, 2018

Mécanique Nordique
Plumbing
Heating
Ventillation
mecanique.nordique@hotmail.com

1255 Rue J.A.Bombardier
Lévis, Québec
G7A 2P4
Téléphone: 418-496-1109
Télécopieur: 418-496-3803

IQALUIT WWTP UPGRADE

DRAWING FOR APPROVAL

Ingineer : NUNAMI STANTEC

DRAWING #: AD-001

Section 23 34 00
Article PART 2
Plans M-801
Application : CF-1 & CF-2
Brand : GREENHECK
Model : SQ-100-VG
Revised # :
Supplyer : EH PRICE

STANTEC PROJECT #: 110126045

This review by Stantec is for general conformance with the design concept of Stantec's design of the:

☐ Architectural ☐ Electrical
☐ Structural ☐ Other
☑ Mechanical

component(s) only and does not mean that Stantec has verified or approves the shop drawing(s). The Contractor remains solely responsible for the shop drawing(s) and this review by Stantec does not relieve the Contractor of the Contractor's responsibility for errors or omissions in the shop drawing(s) or for meeting all requirements of the contract documents. This review does not mean that Stantec approves the detailed design inherent in the shop drawing, responsibility for which shall remain with the Contractor submitting same, nor does this review mean that Stantec accepts any deviation of the shop drawing(s) from the contract documents. The Contractor is responsible for confirming all dimensions and correlating them at the job site, for all construction means, methods and techniques, and for coordination of construction work of all trades, including coordination of all shop drawings.

SUBMITTAL # AD-001

Stantec

☑ REVIEWED
☐ REVIEWED, AS NOTED
☐ REVISE AND RESUBMIT
☐ NOT REVIEWED

DATE 2018-06-04

BY Brendan Zrum, P.Eng

Pages incl. 11
Date : **2018-05-29**
By : **Mécanique Nordique Inc.**

SUBMITTAL

Job Title: **IQALUIT - WWTP Upgrade**

Engineer: STANTEC
Contractor: MECANIQUE NORDIQUE
Elevation: (ft) 243
Date: 5/29/2018
Submitted By: Renee Gaudreault

E H PRICE LIMITED
4600 BOUL HENRI BOURASSA
BUREAU #140
QUEBEC, QC G1H 3A5
CA
Phone: (418)622-9946
Fax: (418)622-0322
Email Address: rgaudreault@ehpricesales.com

GREENHECK
Building Value in Air.

Model: SQ-100-VG

Direct Drive Centrifugal Inline Fan

Dimensional	
Quantity	1
Weight w/o Acc's (lb)	45
Weight w/ Acc's (lb)	79

Performance	
Requested Volume (CFM)	635
Actual Volume (CFM)	635
Total External SP (in. wg)	0.535
Fan RPM	1280
Operating Power (hp)	0.09
Elevation (ft)	243
Airstream Temp.(F)	70
Air Density (lb/ft3)	0.074
Tip Speed (ft/min)	3,748
Static Eff. (%)	58

Motor	
Motor Mounted	Yes
Size (hp)	1/4
Voltage/Cycle/Phase	115/60/1
Enclosure	ODP
Motor RPM	1725
Windings	1

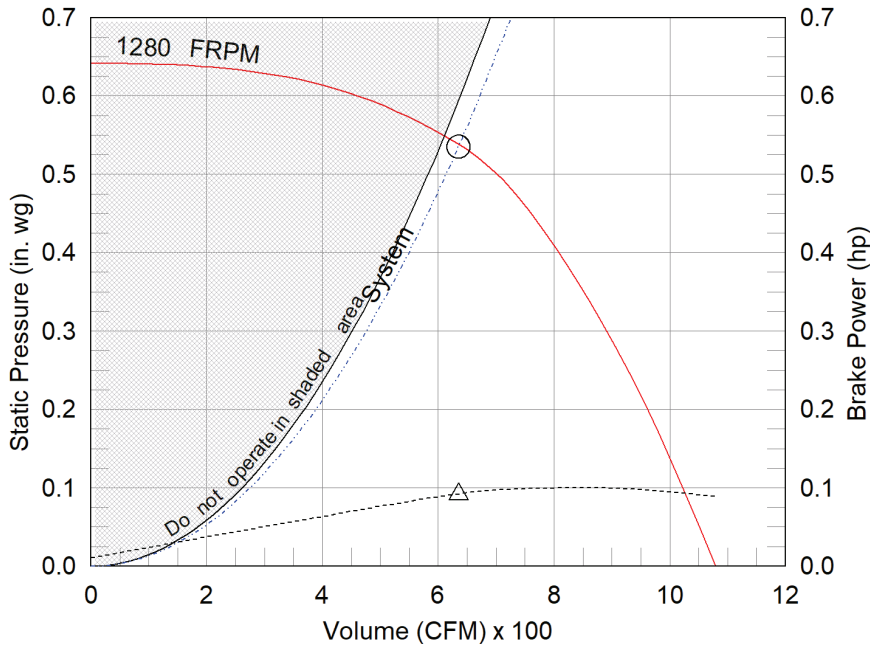

Operating Bhp point
Operating point at Total External SP
Fan curve
System curve
Brake horsepower curve

Static Pressure Calculations		
External SP	0.5	in. wg
Filters	0.035	in. wg
Total External SP	0.535	in. wg

Sound Power by Octave Band

Sound Data	62.5	125	250	500	1000	2000	4000	8000	LwA	dBA	Sones
Inlet	65	67	63	64	61	56	47	46	65	54	6.5
Radiated	66	69	57	58	56	50	41	42	61	49	5.1

Notes:

All dimensions shown are in units of in.
*NEC FLA - based on tables 430.248 or 430.250 of National Electrical Code 2014. Actual motor FLA may vary, for sizing thermal overload, consult factory.
LwA - A weighted sound power level, based on ANSI S1.4
dBA - A weighted sound pressure level, based on 11.5 dB attenuation per Octave band at 5 ft - dBA levels are not licensed by AMCA International
Sones - calculated using AMCA 301 at 5 ft

Model: SQ-100-VG

Direct Drive Centrifugal Inline Fan

Standard Construction Features:

- Galvanized steel housing - Backward inclined aluminum wheel - Two bolted access panels - Integral duct connection flanges - Ball bearing motors (sizes 100-160 and all vari-green motors), sleeve bearing motors (sizes 60-95) - Corrosion resistant fasteners

Selected Options & Accessories:

Motor - Vari-Green EC motor with Dial or 0-10VDC Input
Control - Vari-Green Dial on Exterior of Fan Housing, Mounted and Wired
Switch, NEMA-1, Toggle, Shipped with Unit
Junction Box Mounted & Wired
Sloped Filter Box, 1 in. Aluminum Filters
Unit Warranty: 1 Yr (Standard)

C/W SSH-30 ISOLATORS

SQ-100-VG

Direct Drive Centrifugal Inline Fan

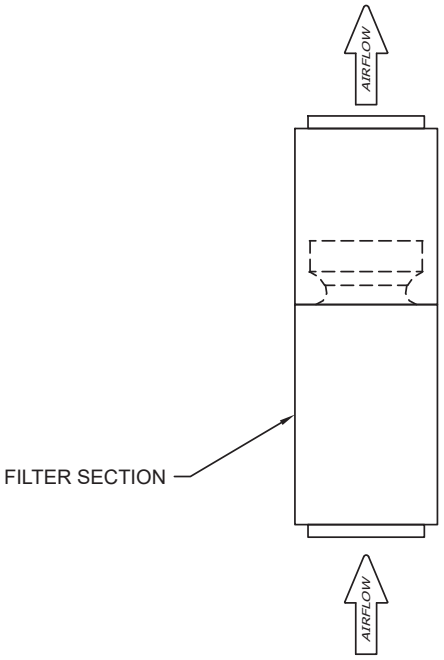

TOP VIEW

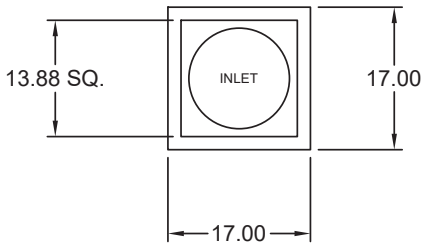

END VIEW

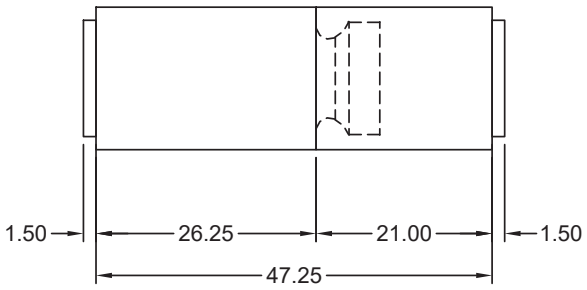

SIDE VIEW

Notes: All dimensions shown are in units of in.

Vari-Green
Motor & Control Options

An EC motor that uses AC input power and internally converts it to DC power. Motor accepts a 0-10VDC control signal along with a 24V source to power controls in the motor. Motor is operable in the 2-10VDC range and off while in the 0-1.9VDC range. Vari-Green motors feature a soft-start and inherent thermal and current protection built into each unit. Inrush current at start up is eliminated and the motor will automatically reduce speed or turn off if overloaded or it becomes too hot.

An EC motor that uses AC input power and internally converts it to DC power. Potentiometer (dial) mounted on the fan housing adjusts the speed (RPM) down 80%. Vari-Green motors feature a soft-start and inherent thermal and current protection built into each unit. Inrush current at start up is eliminated and the motor will automatically reduce speed or turn off if overloaded or it becomes too hot.

Motor Configuration

Input Voltage:	115
Speed Reference:	0-10VDC
24V Required:	No
Permanent Dial:	No
Balance Dial Included:	N/A

Control Configuration

Control Type:	Dial on Fan
Transformer:	Included

Vari-Green

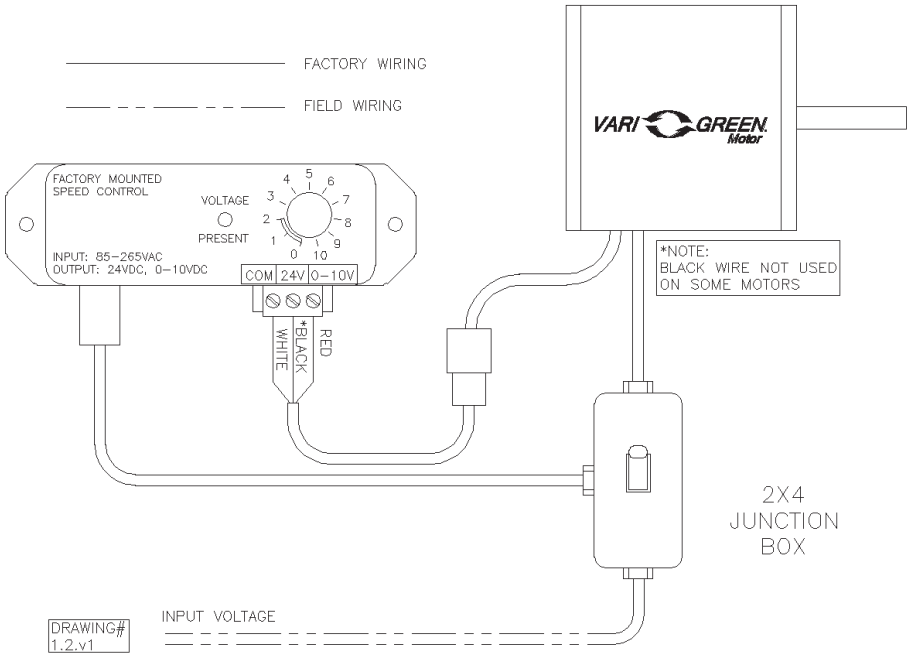

Model: SQ-100-VG

Direct Drive Centrifugal Inline Fan

Dimensional	
Quantity	1
Weight w/o Acc's (lb)	45
Weight w/ Acc's (lb)	79

Performance	
Requested Volume (CFM)	848
Actual Volume (CFM)	848
Total External SP (in. wg)	0.563
Fan RPM	1432
Operating Power (hp)	0.14
Elevation (ft)	243
Airstream Temp.(F)	70
Air Density (lb/ft3)	0.074
Tip Speed (ft/min)	4,195
Static Eff. (%)	54

Motor	
Motor Mounted	Yes
Size (hp)	1/4
Voltage/Cycle/Phase	115/60/1
Enclosure	ODP
Motor RPM	1725
Windings	1

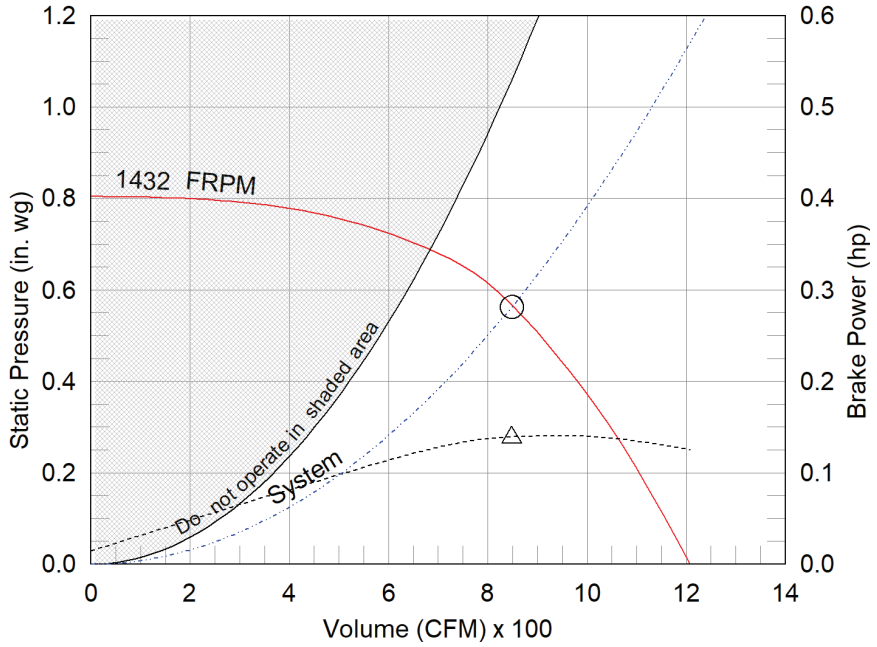

△ Operating Bhp point
○ Operating point at Total External SP
Fan curve
System curve
Brake horsepower curve

Static Pressure Calculations

External SP	0.5	in. wg
Filters	0.063	in. wg
Total External SP	0.563	in. wg

Sound Power by Octave Band

Sound Data	62.5	125	250	500	1000	2000	4000	8000	LwA	dBA	Sones
Inlet	66	69	67	67	63	58	51	49	68	56	7.6
Radiated	67	71	61	60	58	52	45	45	63	51	6.0

Notes:

All dimensions shown are in units of in.
*NEC FLA - based on tables 430.248 or 430.250 of National Electrical Code 2014. Actual motor FLA may vary, for sizing thermal overload, consult factory.
LwA - A weighted sound power level, based on ANSI S1.4
dBA - A weighted sound pressure level, based on 11.5 dB attenuation per Octave band at 5 ft - dBA levels are not licensed by AMCA International
Sones - calculated using AMCA 301 at 5 ft

Building Value in Air

GREENHECK

CAPS 4.26.1588

Generated by: rgaudreault@ehpricesales.com
F:\Greenheck\IQALUIT - WWTP Upgrade.gfcj

Model: SQ-100-VG

Direct Drive Centrifugal Inline Fan

Standard Construction Features:

- Galvanized steel housing - Backward inclined aluminum wheel - Two bolted access panels - Integral duct connection flanges - Ball bearing motors (sizes 100-160 and all vari-green motors), sleeve bearing motors (sizes 60-95) - Corrosion resistant fasteners

Selected Options & Accessories:

Motor - Vari-Green EC motor with Dial or 0-10VDC Input
Control - Vari-Green Dial on Exterior of Fan Housing, Mounted and Wired
Switch, NEMA-1, Toggle, Shipped with Unit
Junction Box Mounted & Wired
Sloped Filter Box, 1 in. Aluminum Filters
Unit Warranty: 1 Yr (Standard)

C/W SSH-30 ISOLATORS

SQ-100-VG

Direct Drive Centrifugal Inline Fan

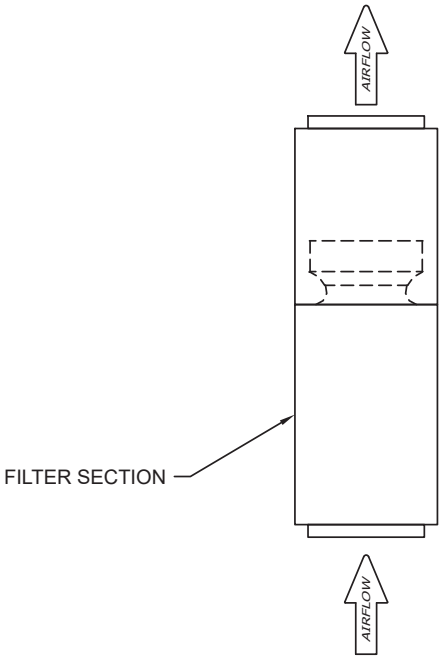

TOP VIEW

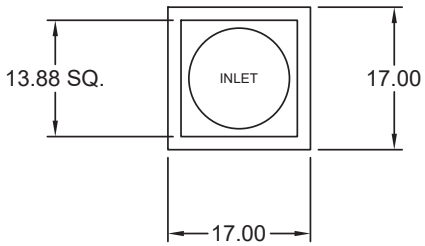

END VIEW

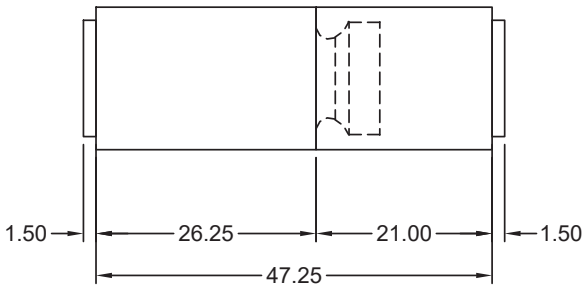

SIDE VIEW

Notes: All dimensions shown are in units of in.

Vari-Green
Motor & Control Options

An EC motor that uses AC input power and internally converts it to DC power. Motor accepts a 0-10VDC control signal along with a 24V source to power controls in the motor. Motor is operable in the 2-10VDC range and off while in the 0-1.9VDC range. Vari-Green motors feature a soft-start and inherent thermal and current protection built into each unit. Inrush current at start up is eliminated and the motor will automatically reduce speed or turn off if overloaded or it becomes too hot.

An EC motor that uses AC input power and internally converts it to DC power. Potentiometer (dial) mounted on the fan housing adjusts the speed (RPM) down 80%. Vari-Green motors feature a soft-start and inherent thermal and current protection built into each unit. Inrush current at start up is eliminated and the motor will automatically reduce speed or turn off if overloaded or it becomes too hot.

Motor Configuration

Input Voltage:	115
Speed Reference:	0-10VDC
24V Required:	No
Permanent Dial:	No
Balance Dial Included:	N/A

Control Configuration

Control Type:	Dial on Fan
Transformer:	Included

Vari-Green

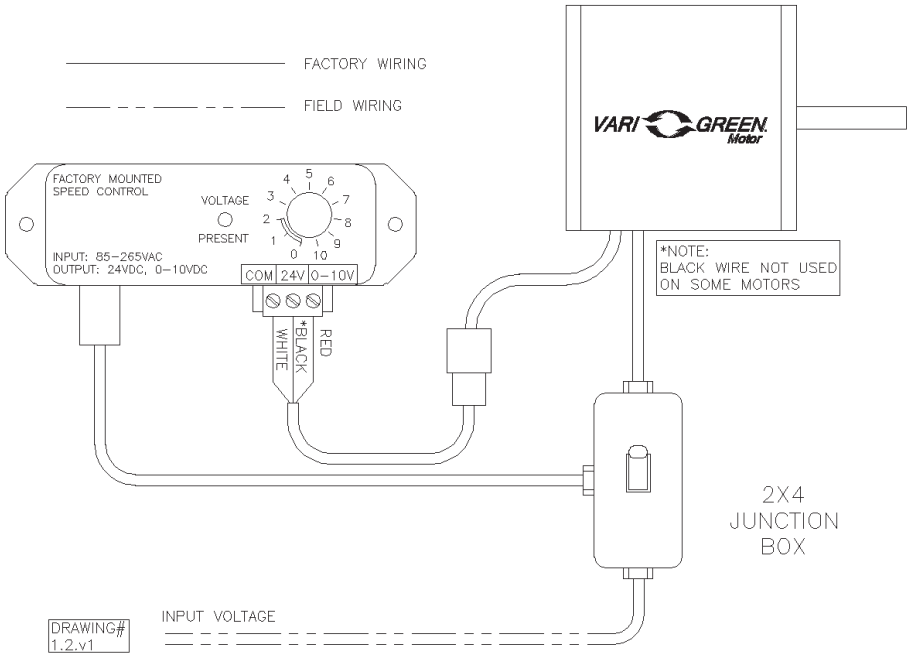

HANGING ISOLATOR (1" DEFLECTION)

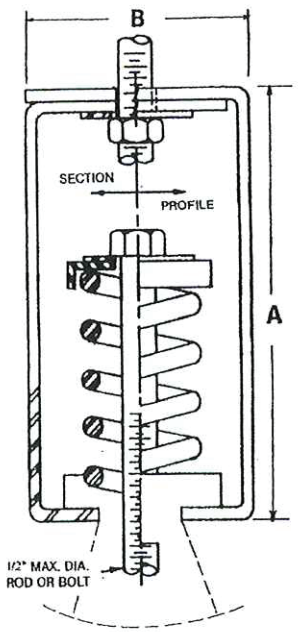

FEATURES

- .HEAVY DUTY GALV. HANGER BOX
- .COLOR CODED SPRINGS FOR IDENTIFICATION
- .EPDM CUP OR EPDM WASHER TO PREVENT METAL TO METAL CONTACT
- .30 DEGREE SWING

NOTE: NUTS, BOLTS, RODS, SUPPLIED BY OTHERS

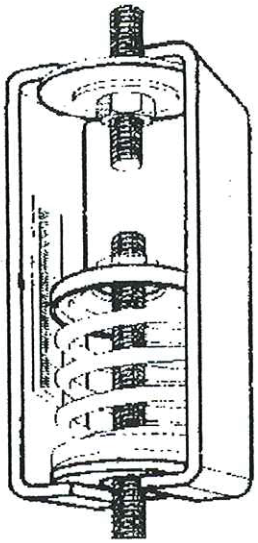

SSH-15 TO SSH-300

SSH-400 TO SSH-1000

MODEL	MAX. LOAD @ 1" DEFL. LBS.	SOLID LOAD LBS.	SOLID DEFL. INCH	COLOR CODE	DIMENSIONS A X B INCHES		ROD DIA.
SSH- 15	15	28.7	1.9	GREY	5.0"	2.50"	1/2"
SSH- 30	30	48.7	1.6	YELLOW	AS ABOVE		1/2"
SSH- 60	60	90.0	1.5	RED	AS ABOVE		1/2"
SSH- 100	100	157.2	1.6	BLUE	AS ABOVE		1/2"
SSH- 150	150	240.5	1.6	BLACK	AS ABOVE		1/2"
SSH- 200	200	269.5	1.4	WHITE	AS ABOVE		1/2"
SSH- 300	300	420.0	1.4	GREEN	AS ABOVE		1/2"
SSH- 400	415	622.5	1.5	RED/BLK	7.5"	3.25"	5/8"
SSH- 500	500	705.0	1.4	SVR/PNK	7.5"	3.25"	3/4"
SSH- 700	715	1072.5	1.5	BLUE	7.5"	3.25"	3/4"
SSH- 1000	1060	1208.4	1.1	ORANGE	7.5"	3.25"	3/4"

PROJECT: IQALUIT WWTP UPGRADE CUSTOMER: MECANIQUE NORDIQUE

ENGINEER: _____ SUPPLIER: EH PRICE

MANUFACTURED BY: ICR ENTERPRISE *(DIV. G. SJODIN HVAC SUPPLY INC.)*

DRWG # 1201 DATED: 3/5/07

REVIEWED BY CONTRACTOR

Kudlik Construction Ltd.

NAME: Sandra Rousseau P.Eng

DATE: Mai 29, 2018

Mécanique Nordique Plumbing Heating Ventillation

mecanique.nordique@hotmail.com

1255 Rue J.A.Bombardier
Lévis, Québec
G7A 2P4
Téléphone: 418-496-1109
Télécopieur: 418-496-3803

IQALUIT WWTP UPGRADE

DRAWING FOR APPROVAL

Ingineer : NUNAMI STANTEC

DRAWING #: AD-002

Section 23 37 17
Article PART 2
Plans M-801
Application : S-1 , R-1 , ES-3 , E-1
Brand : EH PRICE
Model :520D , 80 ,
Revised # :
Supplyer : EH PRICE

STANTEC PROJECT #: 110126045

SUBMITTAL # AD-002

This review by Stantec is for general conformance with the design concept of Stantec's design of the:

☐ Architectural ☐ Electrical
☐ Structural ☐ Other
☑ Mechanical

component(s) only and does not mean that Stantec has verified or approves the shop drawing(s). The Contractor remains solely responsible for the shop drawing(s) and this review by Stantec does not relieve the Contractor of the Contractor's responsibility for errors or omissions in the shop drawing(s) or for meeting all requirements of the contract documents. This review does not mean that Stantec approves the detailed design inherent in the shop drawing, responsibility for which shall remain with the Contractor submitting same, nor does this review mean that Stantec accepts any deviation of the shop drawing(s) from the contract documents. The Contractor is responsible for confirming all dimensions and correlating them at the job site, for all construction means, methods and techniques, and for coordination of construction work of all trades, including coordination of all shop drawings.

Stantec

☐ REVIEWED
☑ REVIEWED, AS NOTED
☐ REVISE AND RESUBMIT
☐ NOT REVIEWED

DATE 2018-06-04

BY Brendan Zrum, P.Eng

Pages incl. 5
Date : **2018-05-29**
By : **Mécanique Nordique Inc.**

Confirm quantities

Grilles/Registers/Diffusers Submittals

Job Name: IQALUIT - WWTP Upgrade
Customer: MECANIQUE NORDIQUE
Engineer: STANTEC
Date Printed: 5/29/2018
Spec Section: 15 - HVAC

Contact: Renée Gaudreault
4645 rue Louis-B-Mayer
Laval, PQ H7P 6G5

Phone: 418-622-9946
Fax: 418-622-0322
Email: rgaudreault@ehpricesales.com

price®

All-In-One
Detailed Submittal Schedule
Grilles/Registers/Diffusers

#	Qty	Model	Unit Size	Border	Pattern	Damper	Finish	Accessories
1	4	520D	10.000, 10.000	F	L		B12	SW
Desc: F - 1 1/4" (32) Flat Frame | L - Front Louver Blades parallel to Long Dimension | B12 - White - Powder								
2	1	520D	12.000, 8.000	F	L		B12	SW
Desc: F - 1 1/4" (32) Flat Frame | L - Front Louver Blades parallel to Long Dimension | B12 - White - Powder								
3	3	520D	6.000, 6.000	F	L		B12	SW
Desc: F - 1 1/4" (32) Flat Frame | L - Front Louver Blades parallel to Long Dimension | B12 - White - Powder								
4	4	520D	12.000, 10.000	F	L		B12	SW
Desc: F - 1 1/4" (32) Flat Frame | L - Front Louver Blades parallel to Long Dimension | B12 - White - Powder								
5	5	520D	12.000, 12.000	F	L		B12	SW
Desc: F - 1 1/4" (32) Flat Frame | L - Front Louver Blades parallel to Long Dimension | B12 - White - Powder								
6	2	520D	6.000, 4.000	F	L		B12	SW
Desc: F - 1 1/4" (32) Flat Frame | L - Front Louver Blades parallel to Long Dimension | B12 - White - Powder								
7	8	520D	8.000, 4.000	F	L		B12	SW
Desc: F - 1 1/4" (32) Flat Frame | L - Front Louver Blades parallel to Long Dimension | B12 - White - Powder								
8	1	80	12.000, 10.000	F		VCS3	B12	SW
Desc: F - 1 1/4" (32) Flat Frame | VCS3 - Coated Steel Opposed Blade Damper | B12 - White - Powder Coat								
9	3	80	12.000, 10.000	F		VCS3	B12	SW
Desc: F - 1 1/4" (32) Flat Frame | VCS3 - Coated Steel Opposed Blade Damper | B12 - White - Powder Coat								
10	8	80	14.000, 12.000	F		VCS3	B12	SW
Desc: F - 1 1/4" (32) Flat Frame | VCS3 - Coated Steel Opposed Blade Damper | B12 - White - Powder Coat								
11	1	80	14.000, 8.000	F		VCS3	B12	SW
Desc: F - 1 1/4" (32) Flat Frame | VCS3 - Coated Steel Opposed Blade Damper | B12 - White - Powder Coat								
12	4	80	6.000, 6.000	F		VCS3	B12	SW
Desc: F - 1 1/4" (32) Flat Frame | VCS3 - Coated Steel Opposed Blade Damper | B12 - White - Powder Coat								
13	1	80	18.000, 12.000	F		VCS3	B12	SW
Desc: F - 1 1/4" (32) Flat Frame | VCS3 - Coated Steel Opposed Blade Damper | B12 - White - Powder Coat								

Confirm quantity

Confirm quantity

Confirm quantity

The order and sale are made pursuant to the terms of the Sales Agreement and the Sales Policies set out in the latest Customer Service Handbook.

520D Louvered Steel Supply Register – 3/4" Blade Spacing, Double Deflection

Core Style:

Double Deflection

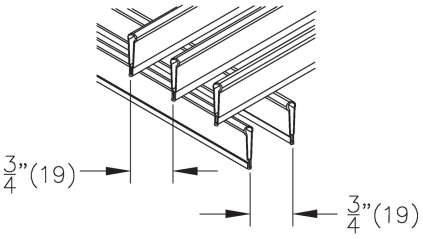

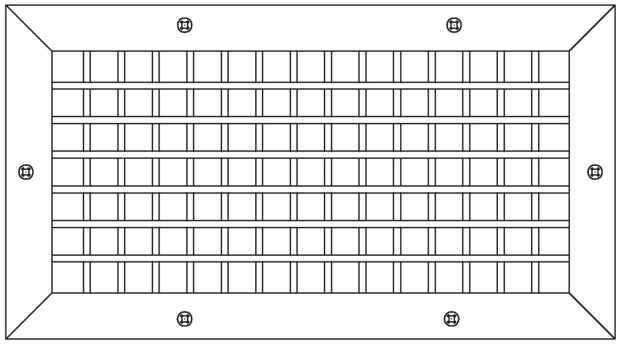

Fastening:

A: Countersunk Screwholes with Screw

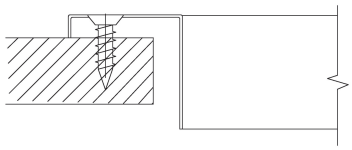

Border: F

1 1/4" (32) Flat Frame

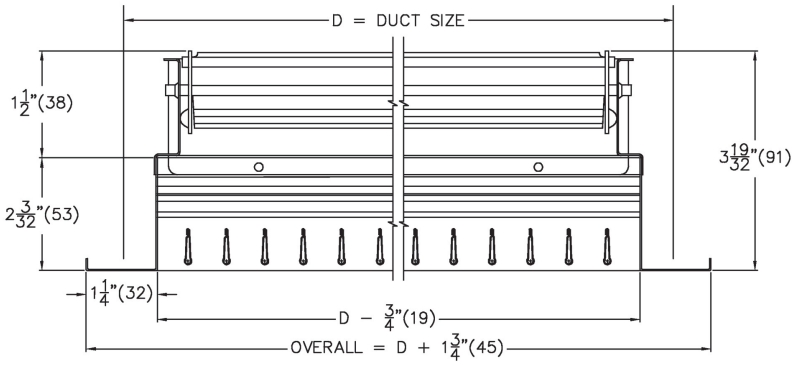

Material:

- Steel

Finish:

- B12 - White Powder Coat

Notes:

- Front blades parallel to Long dimension
- Individually adjustable roll formed blades on 3/4" (19) centers
- VCS3 opposed blade damper, coated steel
- Factory tolerance ± 1/32" (1)

PROJECT: IQALUIT - WWTP Upgrade **SUBMITTAL NO:** 258306 **SUBMITTAL DATE:** 5/29/2018
ENGINEER: STANTEC **CUSTOMER:** MECANIQUE NORDIQUE
DESCRIPTION: Louvered Steel Dbl Deflec Reg W/Damp, 3/4" Spacing
520D//I/6.000,12.000,8.000,10.000/6.000,12.000,4.000,10.000,8.000/F/L////A/SW/B12

© Copyright Price Industries 2018

All metric dimensions () are soft converted. Imperial dimensions are converted to metric and rounded to the nearest millimeter.
Information within this document is subject to change without notice.

80 Egg Crate Register with Steel Damper – 1/2" x 1/2" x 1/2" Core

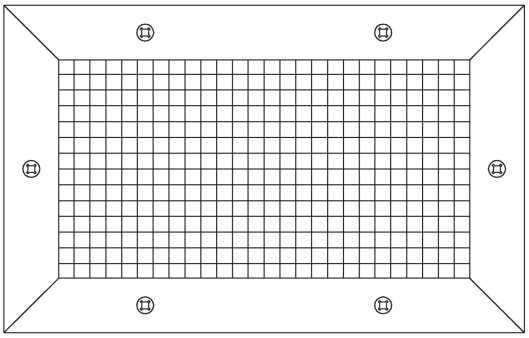

Fastening: A

Countersunk Screw Holes

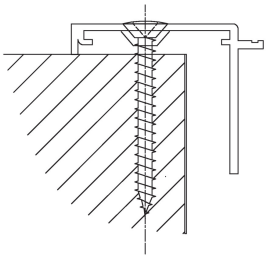

Border: F

1 1/4" (32) Flat Frame

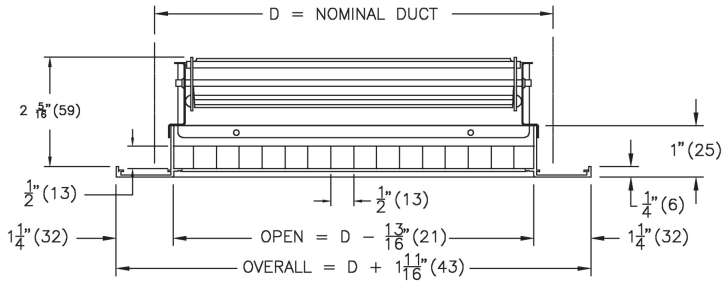

Material:

- Aluminum construction
- Damper: Coated Steel

Finish:

- B12 - White Powder Coat

Notes:

- 1/2" x 1/2" x 1/2" aluminum grid core
- Comes with opposed blade damper
- Factory tolerance ± 1/32" (1)

PROJECT: IQALUIT - WWTP Upgrade **SUBMITTAL NO:** 259683-E **SUBMITTAL DATE:** 5/29/2018
ENGINEER: STANTEC **CUSTOMER:** MECANIQUE NORDIQUE
DESCRIPTION: Egg Crate Grille, 1/2" X 1/2" X 1/2"
80//I/12.000,14.000,18.000,6.000/10.000,8.000,12.000,6.000//SW/F/////////A/////VCS3/B12

© Copyright Price Industries 2018

All metric dimensions () are soft converted. Imperial dimensions are converted to metric and rounded to the nearest millimeter.
Information within this document is subject to change without notice.

REVIEWED BY CONTRACTOR

Kudlik Construction Ltd.

NAME: Sandra Rousseau P.Eng

DATE: Mai 31, 2018

Mécanique Nordique Plumbing Heating Ventillation

mecanique.nordique@hotmail.com

1255 Rue J.A.Bombardier
Lévis, Québec
G7A 2P4
Téléphone: 418-496-1109
Télécopieur: 418-496-3803

IQALUIT WWTP UPGRADE

DRAWING FOR APPROVAL

Ingineer : NUNAMI STANTEC

DRAWING #: AD-003

Section 23 72 00
Article PART 2
Plans M-801
Application : HRV-1
Brand : VENMAR
Model : 2.0ES Product # 47110
Revised # :
Supplyer : EMCO

Pages incl. 3
Date : **2018-05-30**
By : **Mécanique Nordique Inc.**

STANTEC PROJECT #: 110126045

SUBMITTAL # AD-003

This review by Stantec is for general conformance with the design concept of Stantec's design of the:

☐ Architectural ☐ Electrical
☐ Structural ☐ Other
☑ Mechanical

Stantec

component(s) only and does not mean that Stantec has verified or approves the shop drawing(s). The Contractor remains solely responsible for the shop drawing(s) and this review by Stantec does not relieve the Contractor of the Contractor's responsibility for errors or omissions in the shop drawing(s) or for meeting all requirements of the contract documents. This review does not mean that Stantec approves the detailed design inherent in the shop drawing, responsibility for which shall remain with the Contractor submitting same, nor does this review mean that Stantec accepts any deviation of the shop drawing(s) from the contract documents. The Contractor is responsible for confirming all dimensions and correlating them at the job site, for all construction means, methods and techniques, and for coordination of construction work of all trades, including coordination of all shop drawings.

☑ REVIEWED

☐ REVIEWED, AS NOTED

☐ REVISE AND RESUBMIT

☐ NOT REVIEWED

DATE 2018-05-31

BY Brendan Zrum, P.Eng

HEAT RECOVERY VENTILATOR

HRV CONSTRUCTO 2.0ES
Part no. 47110
82 to 192 CFM (0.4 in. w.g.)



VB0167

CONSTRUCTO® SERIES: PERFECT FOR NEW RESIDENTIAL CONSTRUCTION

Contractors and builders need cost-effective, reliable and code-compliant mechanical ventilation systems for new home construction. The Venmar AVS Constructo Series offers superior value at an entry-level price. The Constructo 2.0ES represents over 15 years of continuous improvement to deliver contractors the durability and reliability they have come to expect from Venmar.

Key features:

- Maintenance free, totally enclosed, sealed bearings motor
- Pressure taps, balancing dampers and straps for insulated ducts for quick, effective installation
- Integrated "snap-in" drain system installs in seconds with no additional parts
- ENERGY STAR® qualified
- Compatible with the Deco-Touch™ digital wall control

REPAIRS AND MAINTENANCE

All parts of the HRV Constructo 2.0ES that could need maintenance can be removed in less than 5 minutes, allowing direct access for easy repairs. The motor is permanently lubricated.

WARRANTY

The HRV Constructo 2.0ES is protected by a 5-year warranty on parts. The heat recovery core is covered by a limited lifetime warranty, with the original proof of purchase.

Available at:

Controls

- This unit is very simple to operate. Once it is installed, press on its push button, located on the bottom of the unit, to activate it. Press once for low speed, once again for high speed, and once more to stop it.
- For more convenience, this unit can also be controlled by an optional main control. For a complete list of optional main and auxiliary controls available, refer to the ***Wall Control Compatibility Chart*** on last pages of wall controls specification sheet, available at www.venmar.ca.
- For more details about controls, refer to the ***Main and auxiliary wall controls*** user guide, also available at www.venmar.ca.

Options

- Complete line of registers and diffusers

Defrosting System

The HRV Constructo 2.0ES uses an efficient defrosting method. No negative pressure is created by air exhausted to the outdoors, as the air is recirculated into the house, helping to prevent any backdraft.

Outdoor temperature		Defrost Cycle (minutes)
°C	°F	Defrost / Operation
Warmer than -5	Warmer than 23	No defrost
-5 to -15	23 to 5	6 / 50
-15 to -27	5 to -17	6 / 25
-27 and less	-17 and less	10 / 20

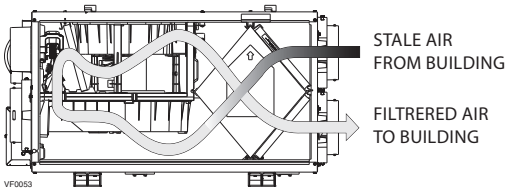

Heat Recovery Core

Dimensions: 12" x 14" x 15.5" (30.5 cm x 35.5 cm x 39.4 cm)

Exchange surface: 102 ft^2 (9.54 m^2)

Weight: 6.2 lb. (2.8 kg)

Material: Polypropylene

Type: Crossflow core

Warranty: Limited Lifetime

Requirements and Standards

- Complies with the UL 1812 requirements regulating the installation of Heat Recovery Ventilators
- Complies with the CSA C22.2 no. 113 Standard applicable to ventilators
- Complies with CSA F326 requirements regulating the installation of Heat Recovery Ventilators
- Technical data was obtained from published results of tests relating to CSA C439 Standards
- HVI certified and ENERGY STAR® qualified

Dimensions: HRV Constructo 2.0ES

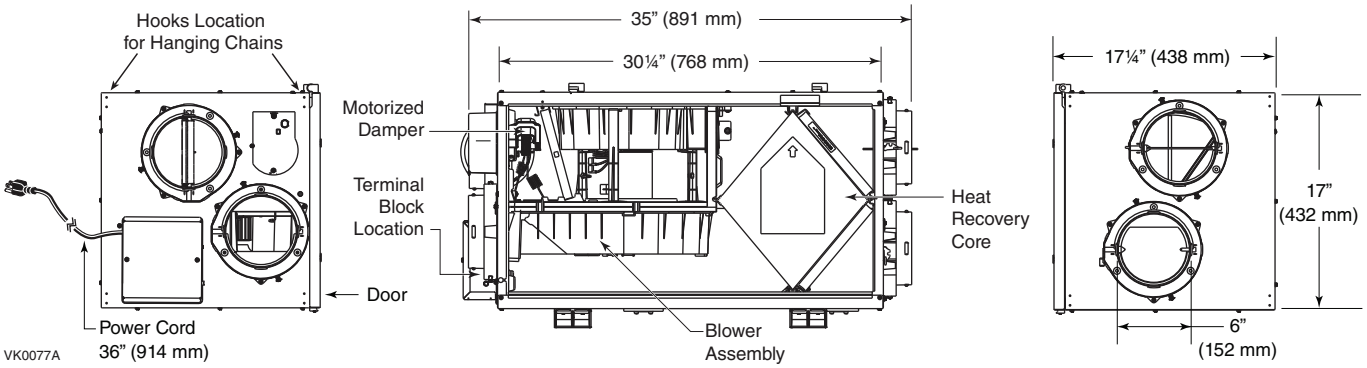

Ventilation Performance

External Static Pressure		Net Supply Air Flow			Gross Air Flow					
					Supply			Exhaust		
Pa	in. w.g.	l/s	cfm	m³/h	l/s	cfm	m³/h	l/s	cfm	m³/h
25	0.1	106	225	382	107	227	386	118	249	423
50	0.2	102	215	365	102	216	367	115	243	413
75	0.3	96	204	347	97	205	348	111	235	399
100	0.4	90	192	326	91	193	328	107	226	384
125	0.5	83	177	301	84	179	304	100	211	358
150	0.6	76	161	274	76	162	275	89	189	321
175	0.7	67	142	241	67	143	243	75	159	270

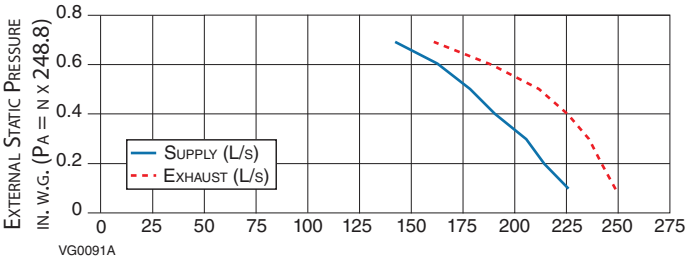

CFM (l/s = CFM x 0.4719) (m³/h = l/s x 3.6)

Energy Performance

Supply Temperature		Net Air Flow			Power Consumed Watts	Sensible Recovery Efficiency	Apparent Sensible Effectiveness	Latent Recovery Moisture Transfer
°C	°F	l/s	cfm	m³/h				
Heating								
0	32	39	82	139	71	65	75	0.01
0	32	61	130	221	129	60	69	0.01
-25	-13	40	84	143	114	60	76	0.03

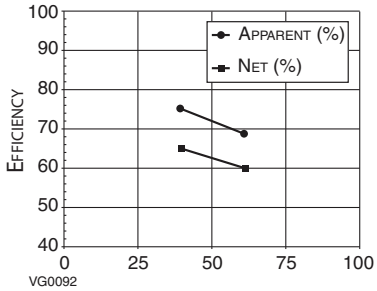

Air Flow - l/s (0.47 l/s = 1 CFM

NOTE: All specifications are subject to change without notice.

Specifications and Ratings

- Model: HRV Constructo 2.0ES
- Part Number: 47110
- Total Assembled Weight (including polypropylene core): 65 lb. (29.5 kg)
- Drains: 1/2" (1.2 cm) fittings with 10 ft. (3 m) PVC drain hose
- Filters: 15 ppi washable reticulated foam 15.375" x 7.125" x 0.75" (39 cm x 18 cm x 1.9 cm)
- 6" Round Ports
- Housing: Pre-painted steel
- Insulation: Expanded polystyrene
- Mounting: Suspension by chains and springs
- Supply & Exhaust Blower Motor: 1 PSC Motor
  - Protection type: Thermally protected
  - Insulation class: B
- Speed Control on unit: Low and High speeds. Other modes available with optional mainl wall controls.
- Heat Recovery Core:
  - Heat Exchange Surface Area: 102 ft.² (9.54 m²)
  - Type: Crossflow
  - Material: Polypropylene
- Unit Electrical Characteristics: 120 volts, 60 Hz, 2.1 amps, 195 watts

Project:	REMARKS
Location:	
Part Number: 47110	
Quantity:	
Submitted by: Date:	

Residential Products Group, 550 Lemire Blvd., Drummondville, Qc, Canada J2C 7W9 - Tel.: 1-800-567-3855 Fax: 1-800-567-1715

Mécanique Nordique
Plumbing
Heating
Ventillation
mecanique.nordique@hotmail.com

1255 Rue J.A.Bombardier
Lévis, Québec
G7A 2P4
Téléphone: 418-496-1109
Télécopieur: 418-496-3803

REVIEWED BY CONTRACTOR
Kudlik Construction Ltd.
NAME: Sandra Rousseau P.Eng
DATE: Jun 11, 2018

IQALUIT WWTP UPGRADE

DRAWING FOR APPROVAL

Ingineer : NUNAMI STANTEC

DRAWING #: AD-004R

Section 23 33 15
Article PART 2
Plans M-402 M-503 M-801
Application : MOTORIZED DAMPER & BACK DRAF DAMPER
Brand : TAMCO
Model : 1000 7000 9000
Revised # : 1
Supplyer : Cometal

Pages incl. 11
Date : **2018-06-11**
By : **Mécanique Nordique Inc.**

Stantec
☐ Reviewed
☒ Reviewed as Modified
☐ Revise and Resubmit
☐ Not Reviewed

Boris Hoefs 6/14/2018
By: _____

This review by Stantec Architecture Ltd. is for the sole purpose of ascertaining conformance with the general design concept. This review shall not mean that Stantec Architecture Ltd. approves the detail design inherent in the shop drawings, responsibility for which shall remain with the Contractor submitting same, and such review shall not relieve the Contractor of his responsibility for errors or omissions in the shop drawings or of his responsibility for meeting all requirements of the Contract Documents. The Contractor is responsible for dimensions to be confirmed and correlated at the job site, for information that pertains solely to fabrication processes or to techniques of construction and installation and for co-ordination of the work of all subtrades.
STANTEC ARCHITECTURE LTD. (PC-1449)

Cometal STD
672, boul. Lemire
Drummondville (Québec), J2C 7W9
Tel: 819-472-3838
Fax: 819-472-0390

REFERENCE
R20081781
Quote Date: 6/11/2018

Project: IQUALUIT WASTE WATER PLANT

Item 1

A (Width) and B (Height) are opening or duct dimensions

Qty	1				
A x B :	1,500	x	1,200	Cfg:	1F
Series:	9000 BF				
Option :	EXTREME COLD TEMP				
Profile:	STANDARD				
Blade Type:	OPPOSED				
Mount Type:	FLANGED TO				
Tag:	CD-1				

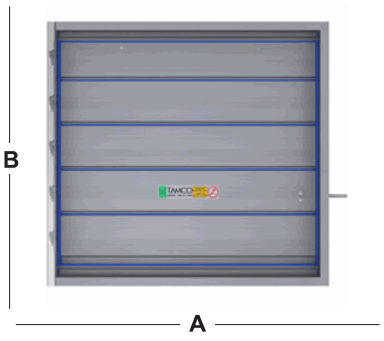

Item 2

A (Width) and B (Height) are opening or duct dimensions

Qty	1				
A x B :	1,200	x	900	Cfg:	1F
Series:	9000 BF				
Option :	EXTREME COLD TEMP				
Profile:	STANDARD				
Blade Type:	OPPOSED				
Mount Type:	FLANGED TO				
Tag:	CD-2				

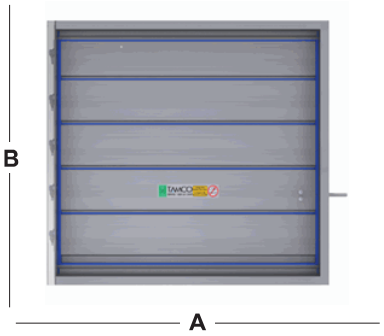

Item 3

A (Width) and B (Height) are opening or duct dimensions

Qty	1				
A x B :	300	x	450	Cfg:	1F
Series:	9000 BF				
Option :	EXTREME COLD TEMP				
Profile:	STANDARD				
Blade Type:	OPPOSED				
Mount Type:	FLANGED TO				
Tag:	CD-3				

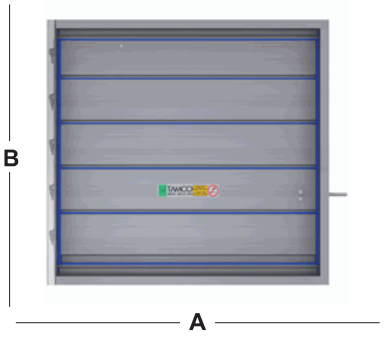

Contact: DAVE FOURNIER
Tel: 819-472-3838
Fax: 819-472-0390

Cometal STD
672, boul. Lemire
Drummondville (Québec), J2C 7W9
Tel: 819-472-3838
Fax: 819-472-0390

REFERENCE
R20081781
Quote Date: 6/11/2018

Project: IQUALUIT WASTE WATER PLANT

Item 4

A (Width) and B (Height) are opening or duct dimensions

Qty	1				
A x B :	300	x	450	Cfg:	1F
Series:	1000				
Option :					
Profile:	STANDARD				
Blade Type:	OPPOSED				
Mount Type:	FLANGED TO				
Tag:	CD-4				

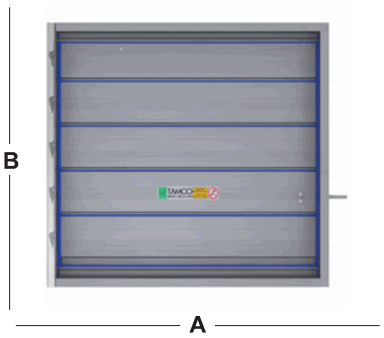

Item 5

A (Width) and B (Height) are opening or duct dimensions

Qty	1				
A x B :	450	x	450	Cfg:	1F
Series:	9000 BF				
Option :	EXTREME COLD TEMP				
Profile:	STANDARD				
Blade Type:	OPPOSED				
Mount Type:	FLANGED TO				
Tag:	CD-5				

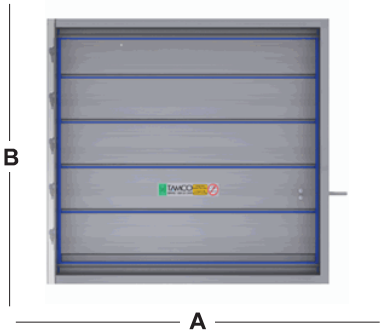

Item 6

A (Width) and B (Height) are opening or duct dimensions

Qty	1				
A x B :	450	x	450	Cfg:	1F
Series:	1000				
Option :					
Profile:	STANDARD				
Blade Type:	OPPOSED				
Mount Type:	FLANGED TO				
Tag:	CD-6				

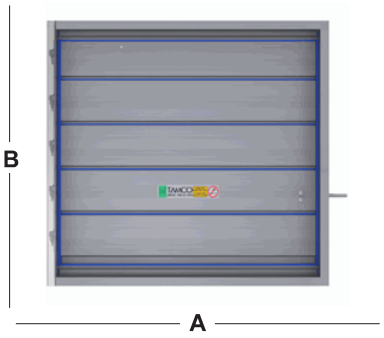

Contact: DAVE FOURNIER
Tel: 819-472-3838
Fax: 819-472-0390

TAMCO Tel: 1-800-561-3449
Fax: 1-800-668-8476

www.tamcodampers.com

Cometal STD
672, boul. Lemire
Drummondville (Québec), J2C 7W9
Tel: 819-472-3838
Fax: 819-472-0390

REFERENCE
R20081781
Quote Date: 6/11/2018

Project: IQUALUIT WASTE WATER PLANT

Item 7

Qty	1				
A x B :	450	x	450	Cfg:	1F
Series:	9000 BF				
Option :	EXTREME COLD TEMP				
Profile:	STANDARD				
Blade Type:	OPPOSED				
Mount Type:	FLANGED TO				
Tag:	CD-7				

A (Width) and B (Height) are opening or duct dimensions

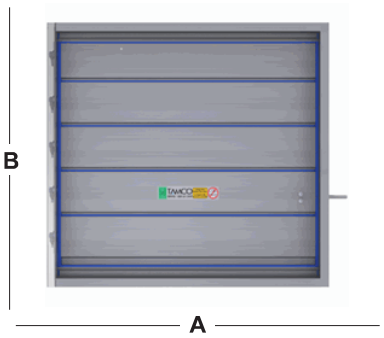

Item 8

Qty	1				
A x B :	200	x	150	Cfg:	1FS
Series:	9000 BF				
Option :	EXTREME COLD TEMP				
Profile:	STANDARD				
Blade Type:	OPPOSED				
Mount Type:	FLANGED TO				
Tag:	CD-8				

A (Width) and B (Height) are opening or duct dimensions

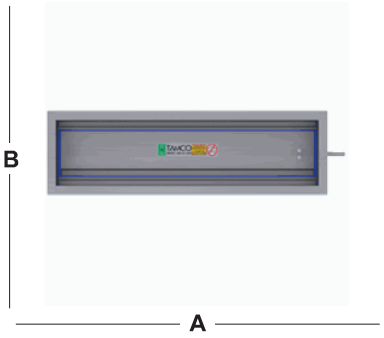

Item 9

Qty	1				
A x B :	450	x	450	Cfg:	1F
Series:	9000 BF				
Option :	EXTREME COLD TEMP				
Profile:	STANDARD				
Blade Type:	OPPOSED				
Mount Type:	FLANGED TO				
Tag:	CD-9				

A (Width) and B (Height) are opening or duct dimensions

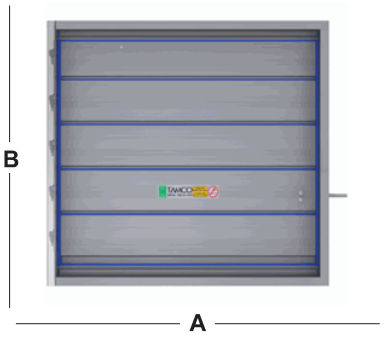

Contact: DAVE FOURNIER
Tel: 819-472-3838
Fax: 819-472-0390

Cometal STD
672, boul. Lemire
Drummondville (Québec), J2C 7W9
Tel: 819-472-3838
Fax: 819-472-0390

REFERENCE
R20081781
Quote Date: 6/11/2018

Project: IQUALUIT WASTE WATER PLANT

A (Width) and B (Height) are opening or duct dimensions

Item 10

Qty	1				
A x B :	200	x	600	Cfg:	1F
Series:	9000 BF				
Option :	EXTREME COLD TEMP				
Profile:	STANDARD				
Blade Type:	OPPOSED				
Mount Type:	FLANGED TO				
Tag:	CD-10				

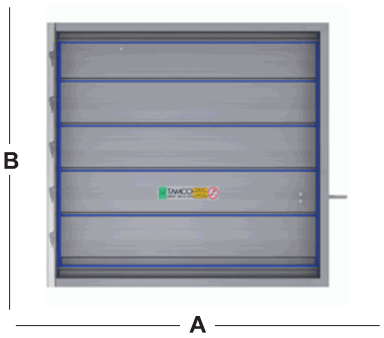

A (Width) and B (Height) are opening or duct dimensions

Item 11

Qty	1				
A x B :	1,200	x	150	Cfg:	1FS
Series:	9000 BF				
Option :	EXTREME COLD TEMP				
Profile:	STANDARD				
Blade Type:	OPPOSED				
Mount Type:	FLANGED TO				
Tag:	CD-11 See Item 17 for CD-12				

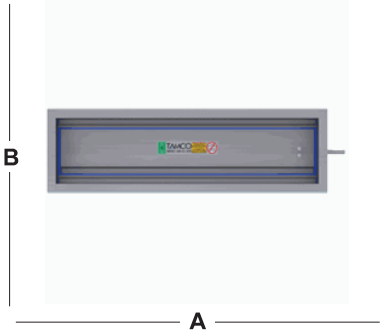

A (Width) and B (Height) are opening or duct dimensions

Item 12

Qty	1				
A x B :	1,050	x	1,200	Cfg:	1F
Series:	1000				
Option :					
Profile:	STANDARD				
Blade Type:	OPPOSED				
Mount Type:	FLANGED TO				
Tag:	CD-13				

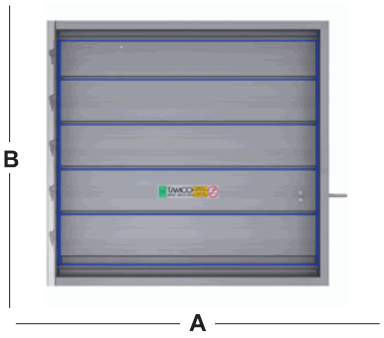

Contact: DAVE FOURNIER
Tel: 819-472-3838
Fax: 819-472-0390

Cometal STD
672, boul. Lemire
Drummondville (Québec), J2C 7W9
Tel: 819-472-3838
Fax: 819-472-0390

REFERENCE
R20081781
Quote Date: 6/11/2018

Project: IQUALUIT WASTE WATER PLANT

Item **13**

A (Width) and B (Height) are opening or duct dimensions

Qty	1				
A x B :	1,050	x	1500	Cfg:	1F
Series:	9000 BF				
Option :	EXTREME COLD TEMP				
Profile:	STANDARD				
Blade Type:	OPPOSED				
Mount Type:	FLANGED TO				
Tag:	CD-14				

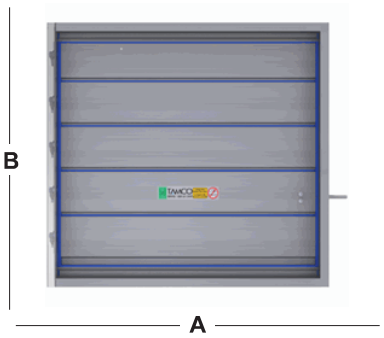

Item **14**

A (Width) and B (Height) are opening or duct dimensions

Qty	1				
A x B :	1,200	x	150	Cfg:	1FS
Series:	9000 BF				
Option :	EXTREME COLD TEMP				
Profile:	STANDARD				
Blade Type:	OPPOSED				
Mount Type:	FLANGED TO				
Tag:	CD-19 See Item 18 for CD-20				

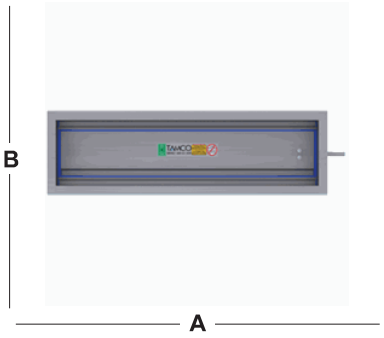

Item **15**

A (Width) and B (Height) are opening or duct dimensions

Qty	1				
A x B :	1,200	x	750	Cfg:	1F
Series:	1000				
Option :					
Profile:	STANDARD				
Blade Type:	OPPOSED				
Mount Type:	FLANGED TO				
Tag:	CD-21				

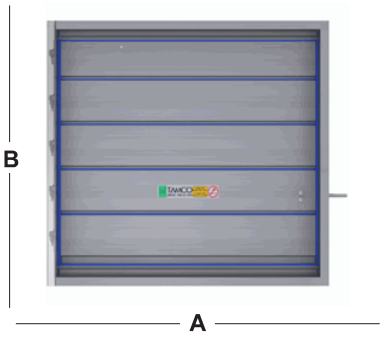

Contact: DAVE FOURNIER
Tel: 819-472-3838
Fax: 819-472-0390

TAMCO Tel: 1-800-561-3449
Fax: 1-800-668-8476

www.tamcodampers.com

Cometal STD
672, boul. Lemire
Drummondville (Québec), J2C 7W9
Tel: 819-472-3838
Fax: 819-472-0390

REFERENCE
R20081781
Quote Date: 6/11/2018

Project: IQUALUIT WASTE WATER PLANT

A (Width) and B (Height) are opening or duct dimensions

Item 16

Qty	1				
A x B :	1,200	x	750	Cfg:	1F
Series:	9000 BF				
Option :	EXTREME COLD TEMP				
Profile:	STANDARD				
Blade Type:	OPPOSED				
Mount Type:	FLANGED TO				
Tag:	CD-22				

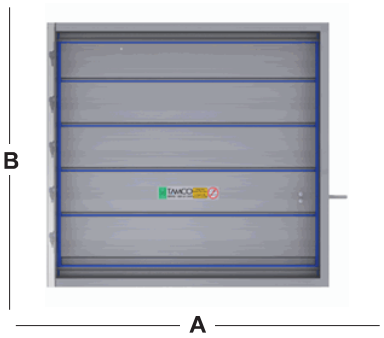

A (Width) and B (Height) are opening or duct dimensions

Item 17

Qty	1				
A x B :	1,200	x	1,200	Cfg:	1F
Series:	9000 BF				
Option :	EXTREME COLD TEMP				
Profile:	STANDARD				
Blade Type:	OPPOSED				
Mount Type:	FLANGED TO				
Tag:	CD-12 See Item 11 for CD-11				

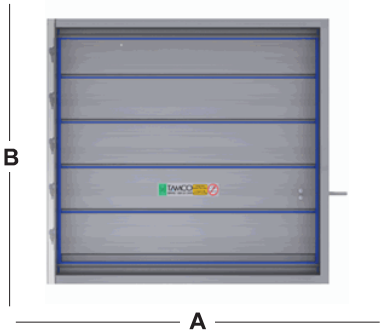

A (Width) and B (Height) are opening or duct dimensions

Item 18

Qty	1				
A x B :	1,200	x	750	Cfg:	1F
Series:	9000 BF				
Option :	EXTREME COLD TEMP				
Profile:	STANDARD				
Blade Type:	OPPOSED				
Mount Type:	FLANGED TO				
Tag:	CD-20 See Item 14 for CD-19				

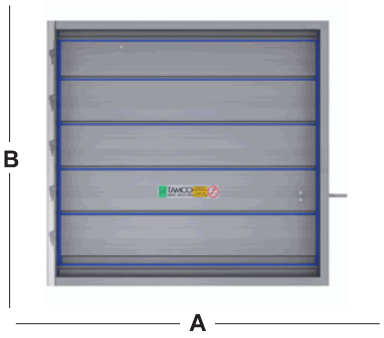

Contact: DAVE FOURNIER
Tel: 819-472-3838
Fax: 819-472-0390

TAMCO Tel: 1-800-561-3449
Fax: 1-800-668-8476

www.tamcodampers.com

Cometal STD
672, boul. Lemire
Drummondville (Québec), J2C 7W9
Tel: 819-472-3838
Fax: 819-472-0390

REFERENCE
R20081781
Quote Date: 6/11/2018

Project: IQUALUIT WASTE WATER PLANT

Item **19**

Qty	1				
A x B :	250	x	153	Cfg:	1C
Series:	7000				
Option :					
Profile:	STANDARD				
Blade Type:	HORIZONTAL				
Mount Type:	IN DUCT				
Tag:					

** Arrow indicates air direction **

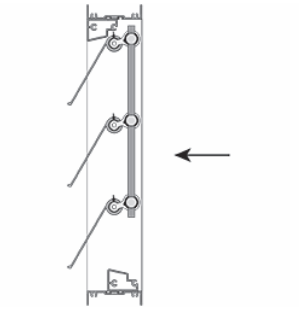

Structural supports for multiple-section damper assemblies are to be supplied and installed by the installing contractor.

Contact: DAVE FOURNIER
Tel: 819-472-3838
Fax: 819-472-0390

TAMCO Tel: 1-800-561-3449
Fax: 1-800-668-8476

www.tamcodampers.com

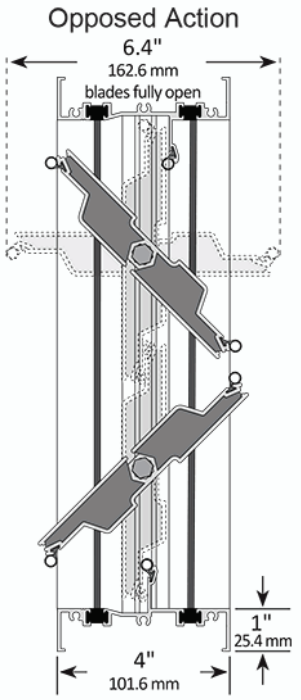

- Extruded aluminum (6063-T5) damper frame is not less than 0.080" (2.03 mm) in thickness. Damper frame is 4" (101.6 mm) deep x 1" (25.4 mm), with mounting flanges on both sides of frame.
- Entire frame is thermally broken by means of polyurethane resin pockets complete with thermal cuts.
- Blades are maximum 6" (152.4 mm) deep extruded aluminum (6063-T5) air-foil profiles, internally insulated with expanded polyurethane foam and thermally broken. Complete blade has an insulating factor of R-2.29 and a temperature index of 55 (tested to AAMA 1502.7 Test Method). All blades are symmetrically pivoted.
- Blade and frame seals are extruded, specially formulated silicone, for reduced air leakage at extreme cold temperatures. Silicone formula is the same as that used by NASA for its Aerospace program and retains flexibility to -100°F (-73°C). Blade and frame seals are secured in an integral slot within the aluminum extrusions and are mechanically fastened to prevent shrinkage and movement over the life of the damper.
- Bearings are composed of a Celcon inner bearing - fixed around a 7/16" (11.11 mm) aluminum hexagon blade pivot pin - rotating within a polycarbonate outer bearing inserted in the frame. This eliminates action between metal-to-metal or metal-to-plastic riding surfaces.
- Adjustable 7/16" (11.11 mm) hexagonal drive rod, U-bolt fastener, and hexagonal retaining nuts are zinc-plated steel. These provide a positive connection to blades and linkage.
- Aluminum and corrosion-resistant zinc-plated steel linkage hardware is installed in the frame side, complete with cup-point trunnion screws for a slip-proof grip.
- Dampers are designed for operation in temperatures ranging from -100°F (-73°C) to 212°F (100°C).
- Leakage Class 1A at 1 in w.g. (0.25 kPa) static pressure differential. Standard air leakage data is certified under the AMCA Certified Ratings Program.
- Dampers are custom made to required size, without blanking off free area. The blade stop is set at a fixed height and is a continuous and integral part of the top and bottom frames.
- Dampers selected with blade action as shown to the left.
- Dampers selected with install type as shown below.
- Installation of dampers must be in accordance with TAMCO's current on-line installation guidelines. (Printed installation guidelines are provided with each damper shipment, however all technical information available on TAMCO's web site at www.tamcodampers.com supersedes information contained within printed versions.)
- Intermediate structural support is required to resist applied pressure loads for dampers that consist of two or more sections in both height and width. (See TAMCO Aluminum Damper Installation Guidelines.)

FLANGED TO DUCT TYPE ▾

› Finished damper O.D. is 2" *(50.8 mm)* greater than opening width and height dimensions.

MINIMUM SECTION SIZE:	
4½"w x 4¼"h	*(115 mm x 108 mm)*
MAXIMUM SECTION SIZE:	
25 ft²	*(2.3 m²)*
60"w x 60"h or	*(1524 mm x 1524 mm) or*
48"w x 75"h	*(1220 mm x 1905 mm)*

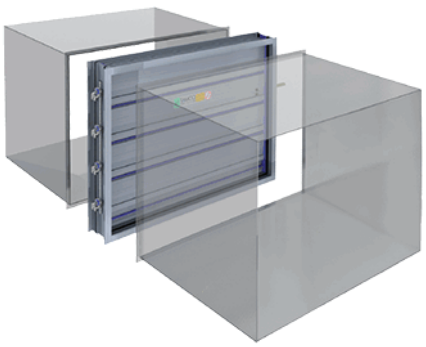

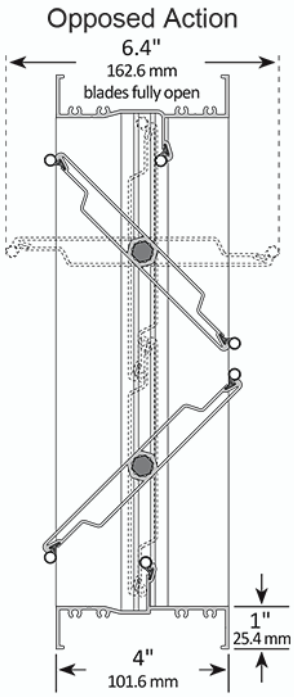

- Extruded aluminum (6063-T5) damper frame is not less than 0.080" (2.03 mm) in thickness. Damper frame is 4" (101.6 mm) deep x 1" (25.4 mm), with mounting flanges on both sides of frame.
- Blades are maximum 6" (152.4 mm) deep extruded aluminum (6063-T5) air-foil profiles. All blades are symmetrically pivoted.
- Blade seals are extruded EPDM. Frame seals are extruded silicone. Seals are secured in an integral slot within the aluminum extrusions. Blade and frame seals are mechanically fastened to prevent shrinkage and movement over the life of the damper.
- Bearings are composed of a Celcon inner bearing - fixed around a 7/16" (11.11 mm) aluminum hexagon blade pivot pin - rotating within a polycarbonate outer bearing inserted in the frame. This eliminates action between metal-to-metal or metal-to-plastic riding surfaces.
- Adjustable 7/16" (11.11 mm) hexagonal drive rod, U-bolt fastener, and hexagonal retaining nuts are zinc-plated steel. These provide a positive connection to blades and linkage.
- Aluminum and corrosion-resistant zinc-plated steel linkage hardware is installed in the frame side, complete with cup-point trunnion screws for a slip-proof grip.
- Dampers are designed for operation in temperatures ranging from -40°F (-40°C) to 212°F (100°C).
- Leakage Class 1A at 1 in w.g. (0.25 kPa) static pressure differential. Standard air leakage data is certified under the AMCA Certified Ratings Program.
- Dampers are custom made to required size, without blanking off free area. The blade stop is set at a fixed height and is a continuous and integral part of the top and bottom frames.
- Dampers selected with blade action as shown to the left.
- Dampers selected with install type as shown below.
- Installation of dampers must be in accordance with TAMCO's current on-line installation guidelines. (Printed installation guidelines are provided with each damper shipment, however all technical information available on TAMCO's web site at www.tamcodampers.com supersedes information contained within printed versions.)
- Intermediate structural support is required to resist applied pressure loads for dampers that consist of two or more sections in both height and width. (See TAMCO Aluminum Damper Installation Guidelines.)

FLANGED TO DUCT TYPE ▼

› For SP and NP Profiles, finished damper O.D. is 2" *(50.8 mm)* greater than opening width and height dimensions.

› For WP Profile, finished damper O.D. is 3.25" *(82.6 mm)* greater than opening width and height dimensions.

MINIMUM SECTION SIZE:	
4½"w x 4¼"h	*(115 mm x 108 mm)*
MAXIMUM SECTION SIZE:	
25 ft²	*(2.3 m²)*
60"w x 60"h or	*(1524 mm x 1524 mm) or*
48"w x 75"h	*(1220 mm x 1905 mm)*

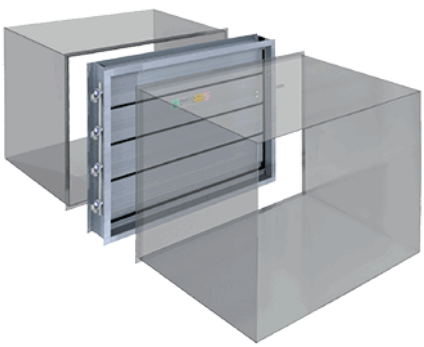

Leakage:	TAMCO Series 7000 comply with the International Energy Conservation Code (IECC) and ASHRAE 90.1 leakage requirements for non-motorized dampers.

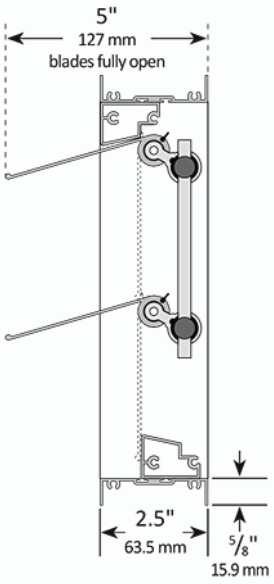

- Extruded aluminum (6063-T5) medium-duty backdraft damper frame is not less than 0.060" (1.52 mm) in thickness. Frame is 2.5" (63.5 mm) deep x 5/8" (15.9 mm), with mounting flanges on both sides of frame.
- Blades are extruded aluminum (6063-T5) profiles not less than 0.060" (1.52 mm) in thickness.
- Blade and frame seals are extruded silicone, secured in an integral slot within the aluminum extrusions. Seals are mechanically fastened to prevent shrinkage and movement over the life of the damper.
- Bearings are composed of 1/2" (12.7 mm) aluminum pivot points, rotating on Celcon bearings.
- Linkage system consists of hard aluminum alloy (6005-T6) crank arms fastened to aluminum pivot rods and doubly secured within a channel at the top of the blade. Large diameter 11/32" (8.73 mm) hard aluminum alloy (6005-T6) linkage rod connects the crank arms by means of a trunnion.
- Trunnions are zinc-plated steel. These provide a hard, smooth, and long-lasting rotating surface.
- Cup-point trunnion screw allows for a penetrating grip of the linkage rod. (Cup-point trunnion set screw creates a compression hard spot where it secures to the linkage rod.)
- Backdraft dampers are designed for operation in temperatures ranging from -40°F (-40°C) to 212°F (100°C).
- Air leakage for backdraft dampers with a width and height of 24" (610 mm) or greater does not exceed 6.93 cfm/ft² (35.20 l/s/m²) against 1 in. w.g. (0.25 kPa) differential static pressure. Air leakage for backdraft dampers with a width or height of less than 24" (610 mm) does not exceed 11.38 cfm/ft² (57.81 l/s/m²) against 1 in. w.g. (0.25 kPa) differential static pressure. Standard air leakage data is certified under the AMCA Certified Ratings Program.
- Medium-duty backdraft dampers are custom manufactured to required size, without blanking off free area.
- Medium-duty backdraft dampers selected with airflow direction as shown below.
- Medium-duty backdraft dampers selected with install type as shown below.
- Installation of medium-duty backdraft dampers must be in accordance with TAMCO's current on-line installation guidelines.
- Intermediate structural support is required to resist applied pressure loads for medium-duty backdraft dampers that consist of two or more sections in both height and width. (See TAMCO Medium-Duty Backdraft Damper Installation Guidelines.)
- Medium-duty backdraft dampers with dimensions greater than maximum section size will be manufactured in multiple sections. (See below for maximum section dimensions.) Multiple sections are not interlinked or connected. To install, each section must be individually fastened to a structural frame prepared on site. Jumpers and jackshafts are not available for multiple-section backdraft dampers.

INSTALLED IN DUCT TYPE ▾

› Finished damper O.D. is ¼" *(6.4 mm)* less than opening width and height dimensions.

MINIMUM SECTION SIZE:	
6"w x 6"h	*(153 mm x 153 mm)*
MAXIMUM SECTION SIZE:	
12.15 ft²	*(1.1 m²)*
36"w x 48.625"h	*(915 mm x 1235 mm)*

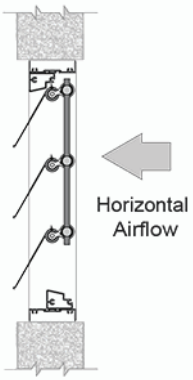

REVIEWED BY CONTRACTOR
Kudlik Construction Ltd.
NAME: Sandra Rousseau P.Eng
DATE: Jun 11, 2018

Mécanique Nordique
Plumbing
Heating
Ventillation
mecanique.nordique@hotmail.com

1255 Rue J.A.Bombardier
Lévis, Québec
G7A 2P4
Téléphone: 418-496-1109
Télécopieur: 418-496-3803

IQALUIT WWTP UPGRADE

DRAWING FOR APPROVAL

Ingineer : NUNAMI STANTEC

DRAWING #: AD-005R

Section	23 13 23
Article	PART 2
Plans	M-802
Application	: Oil Tanks
Brand	: Clemmer
Model	: Custom
Revised #	: 1
Supplyer	: Steelcraft

Pages incl.	3
Date	: **2018-06-11**
By	: **Mécanique Nordique Inc.**

MATERIAL OF CONSTRUCTION									
Primary Tank Material: C.S.					Secondary Tank Material: C.S.				
Head Thickness	Shell Thickness	Bottom Thickness	Roof Thickness	Other	Head Thickness	Shell Thickness	Bottom Thickness	Roof Thickness	Other
6mm	5mm	N/A	N/A	N/A	6mm	4mm	N/A	N/A	N/A

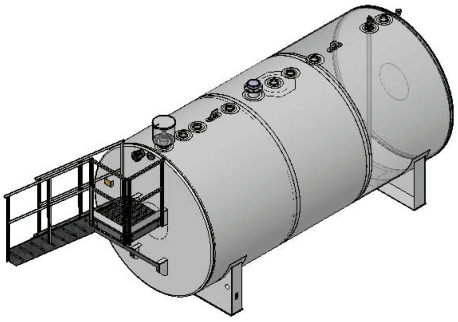

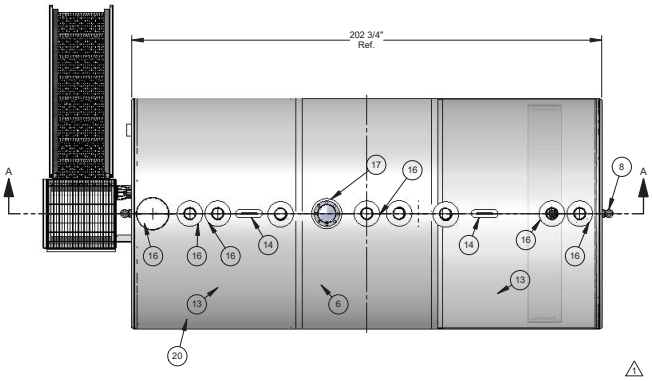

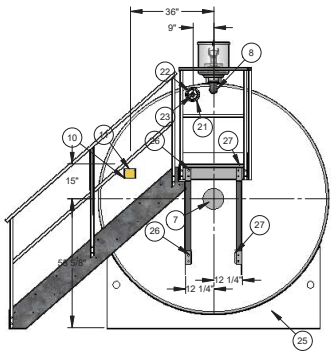

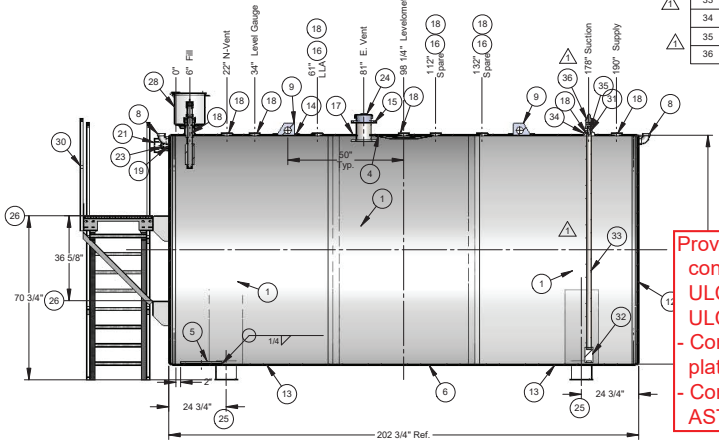

SECTION A-A

ITEM NO.	QTY.	CLEMMER ID	DESCRIPTION	SHIP LOOSE ITEMS
1	3	SHRW098066GC	Shell, Primary Tank	
2	2	HDFF098500JC	Head, Primary Tank: Flat Flanged	
3	1	HDFF099500JC	Head, Secondary Tank: Flat Flanged	
4	1	PATU240000XC	Patch: 1/4" Thk.	
5	1	WERP181800JC	Wear Plate: 1/4" Thk. x 18" Sq.	
6	1		Shell, Secondary Tank	
7	2	SPCP000000XC	Spacer Plate: 3/8" thk. x 24" O.D.	
8	2	ISVE200000XX	INTERSTITIAL VENT FLUSH 2" ELBOW	
9	2	LLTV050075QC	LIFT LUG : 1/2" THK. X 7-1/2" C.S.	
10	1	BKPL400055XC	P.V. LABEL BRACKET: C.S.	
11	1	LBAG601070XX	Nameplate , ULC-S601-14	
12	1	HDFF099500JC	Head, Secondary Tank: Flat Flanged	
13	2		Shell, Secondary Tank	
14	2	WRLL000000XC	Wrap, Lift Lug #LLTV050075QC	
15	1	VNTE060000XC	6" E Vent Assembly	
16	9		Wrap: 4" Weldin	
17	1		Wrap: 6" Pipe	
18	9	WLDF400035XC	4" NPT - 350# Weldin	
19	1	CPHT025701XC	1/4" NPT Cplg	
20	1	CONL200400XC	Connector Plate & Lug: 2" x 4"	
21	1	CGGD450000XC	Cage Guard	
22	1	RGCM450150XC	Cage Guard Mount	
23	1	MNVM300000XX	Monitor VM-3 Vacuum Gauge Ass'y	
24	1	VNTE060002XX	6" E-Vent Morrison Bros	
25	2		Saddle For99.5 Tank	
26	2		Platform Support Bracket	
27	2		Platform Support Bracket	
28	1	KTOP200002XX	Overfill Prevention Valve c-w 19 Ltr. Spill Cont. 2"	YES
30	1	KTSQ080001XX	O.B.C.-Stairway and Platform Assembly for Kit 8 Step	YES
31	1	PURCHASED	REDUCING BUSHING: 2" X 1" NPT.	YES
32	1	PURCHASED	FOOT VALVE 2in FNPT DBL POPPET -335A-0200AV	YES
33	1		DROP TUBE: 2" SCH 40 T.B.E	YES
34	1	BSHD402020XC	Double Tapped Bushing: 4" x 2" x 2" Npt.	YES
35	1		NIPPLE : 1" SCH 40 T.B.E x 3" LG	YES
36	1	PURCHASED	Anti-Siphon Valve: 1" Npt.	YES

SteelCraft Technologies Inc.
for
Approval Only

Provide letter: Confirm tank and secondary containment are constructed to ULC-S630 and tested to ULC/ORD-C- 142.3.
- Confirm stair, handrail and non-skid platform are OSHA approved.
- Confirm sheet steel conforms to ASTM A635/A 635M-02 or equivalent.

REFERENCE: C.S.T.I. CAN/ULC-S601 TANK CONSTRUCTION MANUAL			
Name of Manufacturer:	SteelCraft Inc. - Clemmer Division		
Year of Manufacture:	2018	MARKING / DECALS	
Tank Capacity:	25,000 Ltrs.	All Tanks:	Yes
Maximum Operating Pressure:	7 kPa	Rectangular Tanks:	No
Maximum Test Pressure:	4.35 psig [30 kPa]	Utility Tanks:	No
Maximum Operating Vacuum:	300 Pa	Double Wall Tanks:	Yes
Req. Cap. of Emergency Venting:	154 cu.m./min	Contained Tanks:	No
Standard Number:	CAN/ULC-S601	Other:	No
Approx. Weight:	9723 lbs	Serial No.:	
Interior Finish:	As Welded		
Exterior Finish:	Commercial Blast and Apply interline primer base and 2 Coat Interline 629HS White Top Coat		

REFERENCE: C.S.T.I. CAN/ULC-S601 TANK CONSTRUCTION MANUAL					
PRIMARY TANK JOINTS		TANK CONNECTIONS			
Shell / Sidewall	Fig. 1 - S1.2		Primary	Secondary	
Head	Fig. 2 - H2.2	Weldin	Fig. 6-6.1a	Fig. 10-10.1	
Roof	N/A	Coupling	Fig. 6-6.2	Fig. 10-10.2	
Bottom	N/A	Flanged	Fig. 6 - 6.5	Fig. 10-10.3	
Comer	N/A	Manway	N/A	N/A	
SECONDARY WALL JOINTS		Interstitial Connections		Figure 12	
Shell / Sidewall	LAP	Lifting / Tailing Lug Connections		Fig. 14-TYPE I	
Head / Shell	Fig.11 - D.1	Bulkhead Construction		N/A	
Bottom	N/A	Bracing for Unflanged Flat Heads		N/A	
Spacer	Fig.11 - D.7	Production Test in accordance with Page 6			

STANTEC PROJECT #: 110126045

This review by Stantec is for general conformance with the design concept of Stantec's design of the:
- ☐ Architectural
- ☐ Structural
- ☑ Mechanical
- ☐ Electrical
- ☐ Other

component(s) only and does not mean that Stantec has verified or approves the shop drawing(s). The Contractor remains solely responsible for the shop drawing(s) and this review by Stantec does not relieve the Contractor of the Contractor's responsibility for errors or omissions in the shop drawing(s) or for meeting all requirements of the contract documents. This review does not mean that Stantec approves the detailed design inherent in the shop drawing, responsibility for which shall remain with the Contractor submitting same, nor does this review mean that Stantec accepts any deviation of the shop drawing(s) from the contract documents. The Contractor is responsible for confirming all dimensions and correlating them at the job site, for all construction means, methods and techniques, and for coordination of construction work of all trades, including coordination of all shop drawings.

SUBMITTAL # AD-005R1

Stantec

- ☐ REVIEWED
- ☑ REVIEWED, AS NOTED
- ☐ REVISE AND RESUBMIT
- ☐ NOT REVIEWED

DATE 2018-06-12

BY L Fleming

REV.	DESCRIPTION	DATE	APPROVED
1	DROP TUBES ADDED STAIR REORIANTED	07/06/2018	MW

This drawing is the exclusive property of STEELCRAFT Inc. and is proprietary and confidential information. This drawing and the information contained therein must not be duplicated, used, divulged, reproduced, copied, disclosed or appropriated in whole or in part for any purpose other than as expressly authorized by STEELCRAFT Inc. This drawing must be returned promptly upon request.

STEELCRAFT
Clemmer Division

DESCRIPTION:	25,000 Ltr. Storage Tank, Double Wall, 360 deg, Vacuum Monitored		
CUSTOMER:	Mechanique Nordique Inc.		
PROJECT:	City Of Iqaluit Waste Water Treatment Plant Upgrade		
ITEM NO.:	-	DRN.: MW 30/05/2018	SCALE 1:32
JOB NO.:	31329/1	DWG. NO.: 31329-1-30	1

MATERIAL OF CONSTRUCTION									
Primary Tank Material: C.S.					Secondary Tank Material: C.S.				
Head Thickness	Shell Thickness	Bottom Thickness	Roof Thickness	Other	Head Thickness	Shell Thickness	Bottom Thickness	Roof Thickness	Other
6 mm	4.5 mm	N/A	N/A	N/A	6.0 mm	4.5 mm	N/A	N/A	N/A

ITEM NO.	QTY.	ClemmerNo	DESCRIPTION
1	1		INNER TANK SHELL: BOTTOM 3/16" THK.
2	2		PRIMARY TANK HEAD: 1/4" THK.
3	1		INNER TANK SHELL:TOP 3/16" THK.
4	2		SECONDARY TANK HEAD: 1/4" THK.
5	2		OUTER TANK SHELL: TOP 3/16" THK.
6	5	CPHT200015XC	2" NPT - 150# Half Coupling
7	1	CPHT250015XC	2 1/2" NPT - 150# Half Coupling
8	1		Pipe: 2" Sch.40 x 43" Long w/ M.N.P.T. One End
9	1	BKUL350055XC	Label Bracket: 3 1/2" x 5 1/2"
10	1	LBFO602000XX	Nameplate , ULC-S602
11	1	LLTS290000XC	Lift Lug
12	2		Channel Base: C4 x 5.4# x 23 1/2"" Lg.

STANTEC PROJECT #: 110126045

This review by Stantec is for general conformance with the design concept of Stantec's design of the:

☐ Architectural ☐ Electrical
☐ Structural ☐ Other
☑ Mechanical

component(s) only and does not mean that Stantec has verified or approves the shop drawing(s). The Contractor remains solely responsible for the shop drawing(s) and this review by Stantec does not relieve the Contractor of the Contractor's responsibility for errors or omissions in the shop drawing(s) or for meeting all requirements of the contract documents. This review does not mean that Stantec approves the detailed design inherent in the shop drawing, responsibility for which shall remain with the Contractor submitting same, nor does this review mean that Stantec accepts any deviation of the shop drawing(s) from the contract documents. The Contractor is responsible for confirming all dimensions and correlating them at the job site, for all construction means, methods and techniques, and for coordination of construction work of all trades, including coordination of all shop drawings.

SUBMITTAL # AD-005R1

Stantec

☑ REVIEWED
☐ REVIEWED, AS NOTED
☐ REVISE AND RESUBMIT
☐ NOT REVIEWED

DATE 2018-06-12

BY Lee Fleming

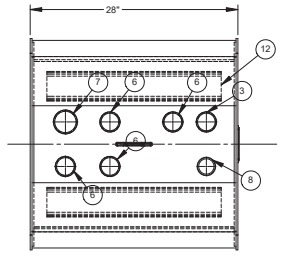

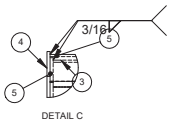

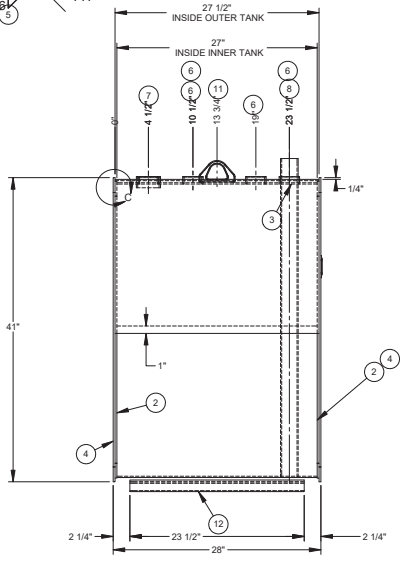

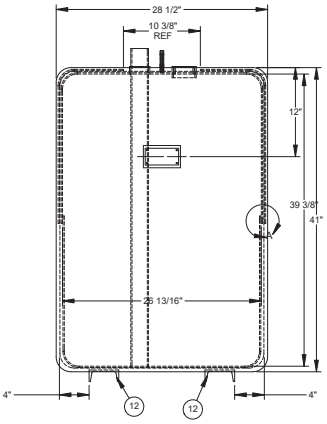

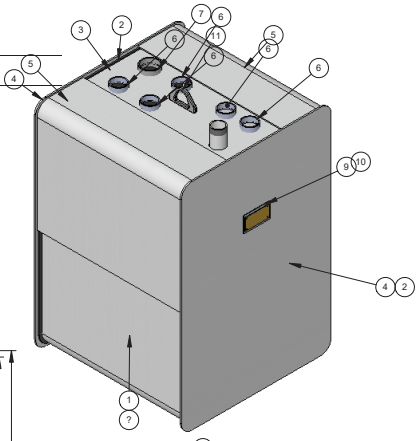

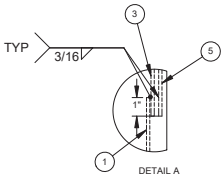

REFERENCE: C.S.T.I. CAN/ULC-S601 TANK CONSTRUCTION MANUAL			
Name of Manufacturer:	SteelCraft Inc. - Clemmer Division		
Year of Manufacture:	2018	MARKING / DECALS	
Tank Capacity:	680 Ltrs.	All Tanks:	YES
Maximum Operating Pressure:	1 psig [7 kPa]	Rectangular Tanks:	NO
Maximum Test Pressure:	5.0 psig [35 kPa]	Utility Tanks:	NO
Maximum Operating Vacuum:	300 Pa	Double Wall Tanks:	YES
Req. Cap. of Emergency Venting:	cu.m./min	Contained Tanks:	YES
Standard Number:	CAN/ULC-S601	Other:	ULC-S602
Approx. Weight:	620.14 lbs	Serial No.:	----
Interior Finish:	As Welded		
Exterior Finish:	interline primer base & 2 Coat Interline 629HS White Top Coat		

REFERENCE: C.S.T.I. CAN/ULC-S601 TANK CONSTRUCTION MANUAL				
PRIMARY TANK JOINTS		TANK CONNECTIONS		
Shell / Sidewall	Fig. 1 - S1.5		Primary	Secondary
Head	Fig. 5 - C5.14	Weldn	N/A	N/A
Roof	N/A	Coupling	Fig. 6-6.2	Fig. 10-10.2
Bottom	N/A	Flanged	N/A	N/A
Corner	N/A	Manway	N/A	N/A
SECONDARY WALL JOINTS		Interstitial Connections		Fig. 20-A
Shell / Sidewall	LAP	Lifting / Tailing Lug Connections		Fig. 14-TYPE IIIa
Head / Shell	Fig. 5 - C5.14	Bulkhead Construction		N/A
Bottom	N/A	Bracing for Unflanged Flat Heads		N/A
Spacer	N/A	Production Test in accordance with Page 6		

REV.	DESCRIPTION	DATE	APPROVED
1	TANK SIZE CHANGED	07/06/2018	MW

This drawing is the exclusive property of STEELCRAFT Inc. and is proprietary and confidential information. This drawing and the information contained therein must not be duplicated, used, divulged, reproduced, copied, disclosed or appropriated in whole or in part for any purpose other than as expressly authorized by STEELCRAFT Inc. This drawing must be returned promptly upon request.

STEELCRAFT
Clemmer Division

DESCRIPTION: 680 LTR. 100% CONTAINED RECTANGULAR TANK (QTY -2)

CUSTOMER: Mecanique Nordique Inc.

PROJECT: City Of Iqaluit Waste Water Treatment Plant Upgrade

ITEM NO.: | DRN.: MW | 03-FEB-2016 | SCALE 1:10

JOB NO.: 31329/3 | DWG. NO.: 31329-3-30

1

REVIEWED BY CONTRACTOR

Kudlik Construction Ltd.

NAME: Sandra Rousseau P.Eng

DATE: Jun 11, 2018

Mécanique Nordique
Plumbing
Heating
Ventillation
mecanique.nordique@hotmail.com

1255 Rue J.A.Bombardier
Lévis, Québec
G7A 2P4
Téléphone: 418-496-1109
Télécopieur: 418-496-3803

IQALUIT WWTP UPGRADE

DRAWING FOR APPROVAL

Ingineer : NUNAMI STANTEC

DRAWING #: AD-006R

Section	23 51 00
Article	PART 2
Plans	M-500
Application	: CHIMNEY
Brand	: ICC
Model	: VIP 2"
Revised #	: 1
Supplyer	:Enerchem

Stantec

☐ Reviewed
☒ Reviewed as Modified
☐ Revise and Resubmit
☐ Not Reviewed

Boris Hoefs 6/14/2018

By: _____

This review by Stantec Architecture Ltd. is for the sole purpose of ascertaining conformance with the general design concept. This review shall not mean that Stantec Architecture Ltd. approves the detail design inherent in the shop drawings, responsibility for which shall remain with the Contractor submitting same, and such review shall not relieve the Contractor of his responsibility for errors or omissions in the shop drawings or of his responsibility for meeting all requirements of the Contract Documents. The Contractor is responsible for dimensions to be confirmed and correlated at the job site, for information that pertains solely to fabrication processes or to techniques of construction and installation and for co-ordination of the work of all subtrades.

STANTEC ARCHITECTURE LTD. (PC-1449)

Pages incl. 4
Date : **2018-06-11**
By : **Mécanique Nordique Inc.**

ICC INDUSTRIAL CHIMNEY COMPANY INC.
ST-JEROME, QUÉBEC, CANADA, J7Y 4B7
TEL: (450) 565-6336 • FAX: (450)565-6519
www.icc-rsf.com

INSTALLATION AND OPERATION INSTRUCTIONS

"Model VIP"

CHIMNEY TYPE: FACTORY BUILT CHIMNEY FOR USE ON COMMERCIAL AND INDUSTRIAL POSITIVE PRESSURE, FORCED DRAFT AND NATURAL DRAFT APPLIANCES

SIZE: 6" TO 48" I.D.

A MAJOR CAUSE OF CHIMNEY RELATED FIRES IS FAILURE TO MAINTAIN REQUIRED CLEARANCE (AIR SPACE) TO COMBUSTIBLE MATERIALS. IT IS OF UTMOST IMPORTANCE THAT THIS CHIMNEY BE INSTALLED ONLY IN ACCORDANCE WITH THESE INSTRUCTIONS.

Use only factory supplied components. Failure to do so will void the certification and the warranty of this chimney.

If possible, install the chimney on the interior of the building as it will provide better performance than an exterior chimney. In areas with continuous temperatures below -18 °C (0 °F). The use of an exterior chimney may result in operating problems such as poor draft and excessive condensation of combustion products. If you do install an exterior chimney, we recommend that you install it within an insulated enclosure.

Read these instructions and keep them for future reference. Contact local building or fire officials about restrictions and installation inspection in your area

TABLE OF CONTENTS

TECHNICAL SPECIFICATIONS..... 3
INSTALLATION NOTES..... 4
MODEL "VIP" CHIMNEY..... 5
INSTALLATION INSTRUCTIONS..... 5

Universal Adaptator Plate (AP)..... 5
Base Support (BS)..... 6
Wall Support (WS)..... 7
Chimney Length (L)..... 7
Elbows (E15, E22.5, E30, E45)..... 8
Wall Band (WB)..... 8
Guy Band (GB)..... 9
Radiation Shield (RS)..... 9
Roof Flashing (FF, FA, FB, FC)..... 10
Rain Cap (RC) and Exit Cone (EC)..... 10
Adjustable Length (A1, A2)..... 10

LISTING:

CANADA

CHIMNEY SIZE 6" - 48"
O. R. DOCUMENT ULC-C-959-RD-87
ULC LISTING # CMH 1428

VIP is pressure tested to the Canadian RD S657 Industrial Chimney Standard.

USA

CHIMNEY SIZE 6" - 36"
STANDARD UL-103
UL-LISTING # MH-16722

VIP is listed to the UL 103 Standard. It is not pressure listed to UL 103.

TECHNICAL SPECIFICATIONS

MATERIALS:

Flue / Casing: 304/304 - 304/Galvalume - 316/304 - 316/316

Insulation: High temperature mineral wool 50mm

ALLOWABLE FLUE GAS TEMPERATURE:

MAXIMUM CONTINUOUS FIRING	1400°F	760°C
BRIEF FORCE FIRING	1700°F	927°C
TESTED TO	1800°F	980°C
MAXIMUM CONTINUOUS FIRING	1000°F	540°C
BRIEF FORCE FIRING	1400°F	760°C
TESTED TO	1700°F	927°C

CLEARANCES:

To Non-Combustible material: No clearance required

To Combustible material: See chart below

CHIMNEY I.D.	CONTINUOUS TEMPERATURE	
(in.)	1000°F	1400°F
6" - 12"	2"	2"
14"	2"	4"
16"	2"	5"
18" - 20"	2"	6"
22"	2"	7"
24"	4"	7"
26" - 28"	5"	7"
30" - 32"	6"	7"
34" - 36"	7"	7"
38" - 48"	8"	8"

INSTALLATION NOTES

GENERAL:

1. The chimney is intended for use with commercial and industrial heating appliances and diesel engine generating positive pressure in the stack. This chimney is NOT for use in single or two family residences.

   Allowable Flue Gas Temperature:

MAXIMUM CONTINUOUS FIRING	1400°F	760°C
BRIEF FORCE FIRING	1700°F	927°C
TESTED TO	1800°F	980°C

2. Size the chimney in accordance with the appliance manufacturer's instructions. ICC will calculate correct chimney sizing on request.

3. The chimney must **NOT** be enclosed in a combustible chase. If it is desirable to enclose the chimney, then the enclosure must be constructed of non combustible materials. The fire rating required is determined by the local building code. A one hour fire rating is accepted in most areas.

4. Do not fill the space around the chimney with insulation or any other material. This space must remain empty.

5. The chimney shall extend at least 3'. above point of contact with the roof and at least 2'. higher than any wall, roof or adjacent building within 10'.

6. The maximum height of unguyed chimney above the roof is 5'.

7. The clearance between single wall connector and unprotected combustible material **must not be** less than 18" (refer to the Building Code in use in your area).

8. Factory built chimneys which extend through any story above that on which the connected appliance is located are to be provided with enclosures having a fire rating equal to or greater than that of the floor or roof assembly through which they pass.

9. A support must be installed on the first chimney section above each vertical tee.

10. **Chimney Cleaning:**

    Keep your chimney clean. Access should be provided for the inspection and cleaning of all sections of the chimney.

    Have your chimney cleaned by a qualified chimney sweep. If you want to clean your chimney yourself, then clean your chimney using a nylon or metal chimney brush of the **CORRECT SIZE. DO NOT** use a brush that will scratch the stainless steel interior of the chimney.

11. **Soot Formation and Need for Removal (oil appliance):**

    Soot can accumulate on the chimney flue when connected to an oil fired appliance. If not removed periodically this deposit can ignite and possibly damage the chimney.

    The chimney should be inspected at least once every year during the heating season to determine if any build-up of soot has occurred.

    If soot has accumulated, it should be removed to reduce the risk of chimney fire.

MODEL "VIP" CHIMNEY

1. The maximum height of chimney supported is:

2. The supports described in this booklet are the only supports which should be used with ICC's MODEL "VIP" Factory Built Chimney.

3. If additional height is required, use an additional support at the specified maximum chimney support height.

Chimney Size (I.D.)		6”	8”	10”	12”	14”	16”	18”	20”
Universal Adaptor Plate	(AP)	186’	146’	120’	102’	89’	78’	70’	64’
Base Support	(BS)	186’	146’	120’	102’	89’	78’	70’	64’
Wall Support	(WS)	150’	118’	97’	82’	72’	63’	57’	51’
Chimney Length	(L)	186’	146’	120’	102’	89’	78’	70’	64’
Insulated Tee	(TR)	82’	65’	53’	45’	39’	35’	31’	28’

Chimney Size (I.D.)		22”	24”	26”	28”	30”	32”	34”	36”
Universal Adaptor Plate	(AP)	58’	53’	49’	46’	43’	40’	38’	36’
Base Support	(BS)	58’	53’	49’	46’	43’	40’	38’	36’
Wall Support	(WS)	47’	43’	40’	37’	35’	33’	31’	29’
Chimney Length	(L)	58’	53’	49’	46’	43’	40’	38’	36’
Insulated Tee	(TR)	26’	23’	22’	20’	19’	18’	17’	16’

Chimney Size (I.D.)		38”	40”	42”	44”	46”	48”
Universal Adaptor Plate	(AP)	34’	33’	31’	30’	28’	27’
Base Support	(BS)	34’	33’	31’	30’	28’	27’
Wall Support	(WS)	28’	26’	25’	24’	23’	22’
Chimney Length	(L)	34’	33’	31’	30’	28’	27’
Insulated Tee	(TR)	15’	14’	13’	13’	12’	12’

INSTALLATION INSTRUCTIONS

UNIVERSAL ADAPTOR PLATE (AP)

The chimney may be supported directly on top of the appliance. This is achieved by attaching a Universal Adaptor Plate (AP) directly to the outlet of the appliance. There are many flue collar designs as there are boiler manufacturers.

Custom plate sizes and hole patterns are available upon request.

The maximum supported height is the lesser of: the maximum allowable weight that the appliance can support or the height specified in our technical specifications.

1. Attach the adaptor plate to the appliance flue outlet using clamps, bolts or stainless steel metal screws depending on the flue outlet type.

2. Place the first chimney length on the adaptor plate.

3. Attach the chimney length to the adaptor plate using stainless steel metal screws through the adaptor plate retaining brackets.

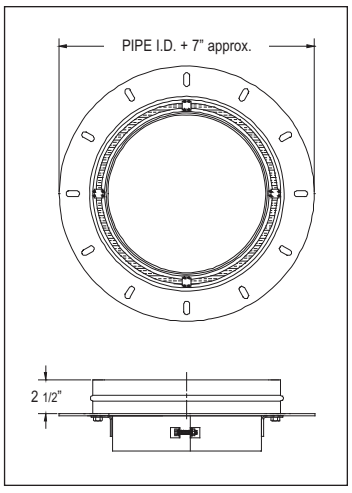

BASE SUPPORT (BS)

This Support may be attached to a combustible or non-combustible floor or roof.

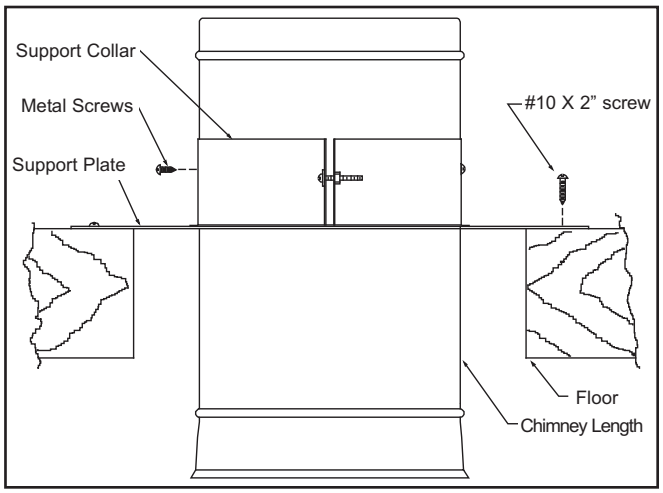

1. Attach the support to the floor or roof using at least a #10 X 2" screw through each hole in the support.

2. Place the support collar around the chimney length at the desired height. Tighten the ring and then screw the stainless steel metal screws (supplied with support) through the collar and into the chimney casing. Be sure to use a metal screw in each prepunched hole.

3. Place the chimney and collar in the support.

4. Continue installing chimney lengths as required.

The Minimum Hole Size (1000°F flue gas)

Chimney Size (I.D.)	6”	8”	10”	12”	14”	16”	18”	20”
Combustible	12”	14”	16”	18”	20”	22”	24”	26”
Non-Combustible	9”	11”	13”	15”	17”	19”	21”	23”

Chimney Size (I.D.)	22”	24”	26”	28”	30”	32”	34”	36”
Combustible	28”	34”	38”	40”	44”	46”	50”	52”
Non-Combustible	25”	27”	29”	31”	33”	35”	37”	39”

Chimney Size (I.D.)	38”	40”	42”	44”	46”	48”
Combustible	56”	58”	60”	62”	64”	66”
Non-Combustible	41”	43”	45”	47”	49”	51”

The Minimum Hole Size (1400°F flue gas)

Chimney Size (I.D.)	6”	8”	10”	12”	14”	16”	18”	20”
Combustible	12”	14”	16”	18”	24”	28”	32”	34”
Non-Combustible	9”	11”	13”	15”	17”	19”	21”	23”

Chimney Size (I.D.)	22”	24”	26”	28”	30”	32”	34”	36”
Combustible	38”	40”	42”	44”	46”	48”	50”	52”
Non-Combustible	25”	27”	29”	31”	33”	35”	37”	39”

Chimney Size (I.D.)	38”	40”	42”	44”	46”	48”
Combustible	56”	58”	60”	62”	64”	66”
Non-Combustible	41”	43”	45”	47”	49”	51”

WALL SUPPORT (WS)

This support may be attached to a combustible or non-combustible wall. It may be used to support an Insulated Tee or a Chimney Length.

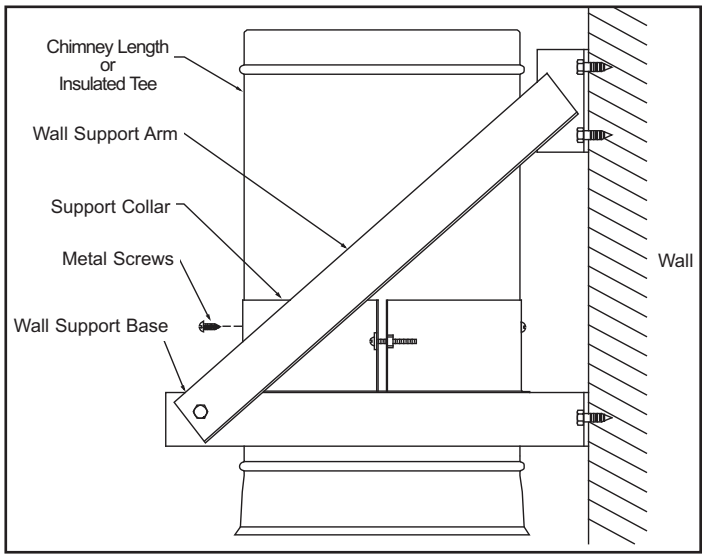

1. Attach the main support plate to the wall using at least a #10 X 2" screw through each hole in the plate. Make sure the support is horizontal, then attach the angle arms to the wall above the support.

2. Place the support collar around the chimney length at the desired height. Tighten the ring and then screw the stainless steel metal screws (supplied with support) through the collar and into the chimney casing. Be sure to use as many metal screws as there are prepunched holes in the chimney lengths.

3. Place the chimney and collar in the support.

4. Continue installing chimney lengths as required.

CHIMNEY LENGTHS (L)

Typical for Chimney Length, Tee and Elbow installation.

Install Chimney lengths as follows:

1. Before you fasten the chimney sections together apply caulking (apx. 3/16 Ø) above the top bead of the first chimney section.

2. Firmly place the next chimney section on top of the first section. Screw the stainless steel metal screws (supplied with the length) through the prepunched holes in the bottom of the length and into the lower length. Be sure to use a metal screw in each prepunched hole.

3. Wipe the excess caulking over the screw heads and along the joint surface.

4. Install the locking band over the joint. The locking band overlaps one of the beads above and one of the beads below the joint.

5. Continue until the required chimney height is achieved.

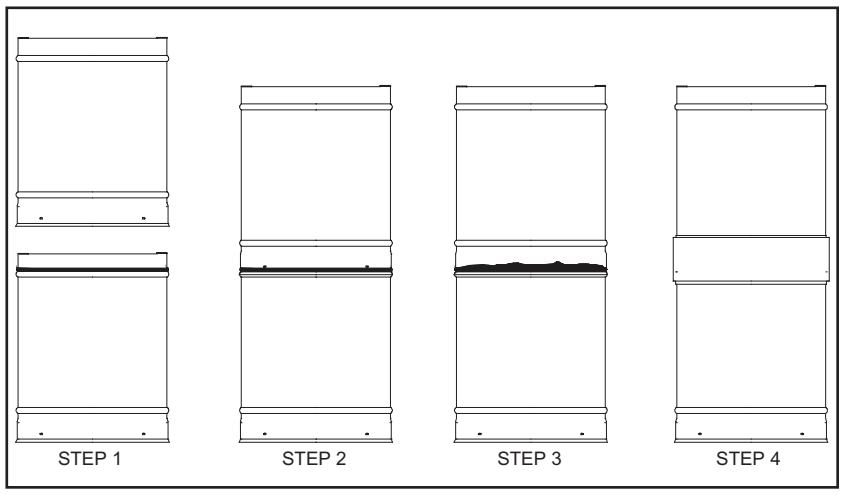

Note: *Only use the Caulking supplied by ICC with your chimney order.*

ELBOWS (E15, E22.5, E30, E45)

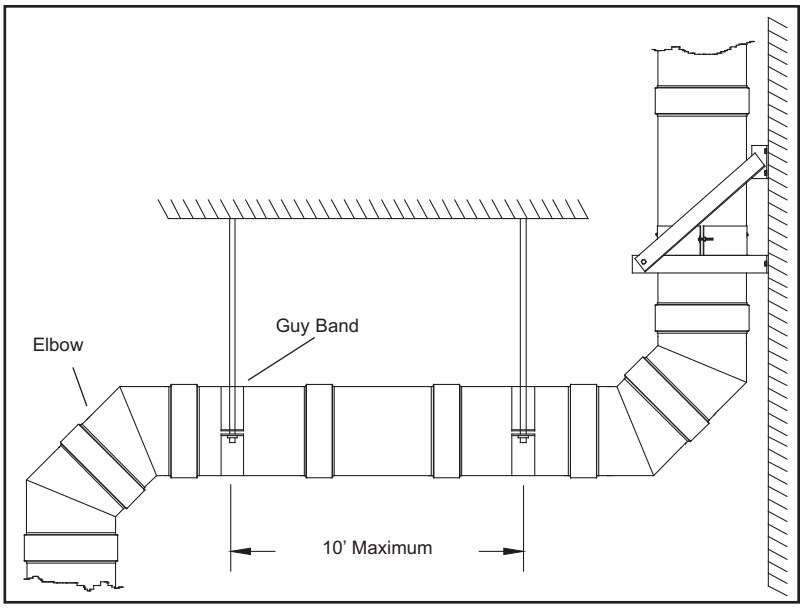

Elbows are used to offset the chimney in order to bypass a building obstruction. The number of elbows used and the degree of offset should be kept to a minimum because offsets reduce the draft available to the chimney.

The elbows are attached and sealed in the same manner as the chimney lengths.

A support must be used above any offset.

A Guy Band (GB) must be used for any offset of more than ten feet. Use additional Guy Bands at ten foot intervals of the offset chimney.

1. Place the elbow on the chimney length.

2. Screw the stainless steel metal screws (supplied with the elbow) through the prepunched holes in the bottom of the elbow and into the lower length. Be sure to use a metal screw in each prepunched hole.

WALL BAND (WB)

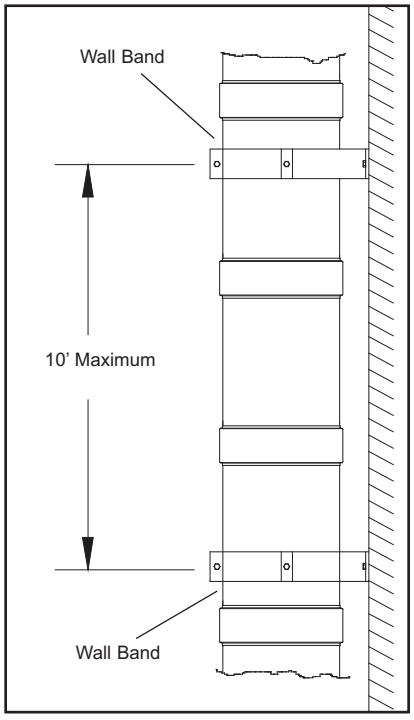

The Wall Band is used to secure the chimney to an exterior or interior wall. The recommended maximum length of chimney between wall bands is ten feet.

1. Choose a convenient location for the Wall Band.

2. Place the band collar around the chimney length at the desired height. Tighten the ring and then screw the stainless steel metal screws (supplied with wall band) through the collar and into the chimney casing. Be sure to use a metal screw and sealant in each prepunched hole.

3. Attach the band arms to the collar using the bolts supplied.

4. Attach the band arms to the wall a minimum of #10 X 2" metal screws through each hole in the support.

GUY BAND (GB)

The Guy Band may be used to support an offset chimney. The maximum distance between Guy Bands is ten feet.

The Guy Band may also be used to secure a chimney above the roof. The maximum length of unguyed chimney above the roof is five feet. The maximum length of guyed chimney above the roof is twenty feet. The maximum length of chimney between guy bands is ten feet. If height greater than twenty feet is required above the roof, an engineered support system should be installed.

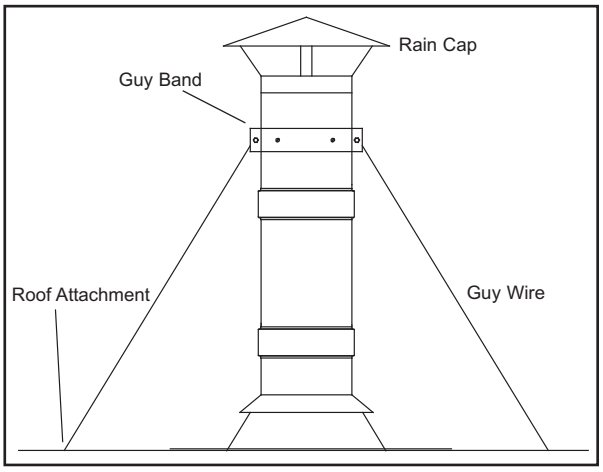

1. Place the band collar around the chimney length at the desired location. Tighten the ring and then screw the stainless steel metal screws (supplied with the band) through the band and into the chimney casing. Be sure to use a metal screw in each prepunched hole.
2. Attach guy wires to the band and to the roof or ceiling using adequate attachments (not supplied). Tighten the guy wires until the chimney is properly located and secure.

RADIATION SHIELD (RS)

The Radiation Shield is used to shield the chimney when passing through a combustible floor or roof.

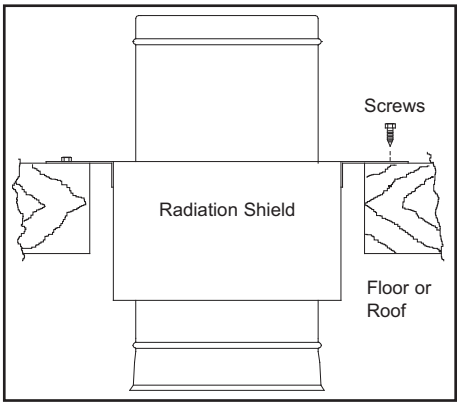

1. Install the length of chimney that passes through the floor or roof.
2. Fit the Radiation Shield over the chimney and position it so that the attachment tabs touch the floor or roof.
3. Attach the tabs to the floor or roof using #8 X 2" screws.

The Minimum Hole Size (1000°F flue gas)

Chimney Size (I.D.)	6”	8”	10”	12”	14”	16”	18”	20”
Hole size	12”	14”	16”	18”	20”	22”	24”	26”

Chimney Size (I.D.)	22”	24”	26”	28”	30”	32”	34”	36”
Hole size	28”	34”	38”	40”	44”	46”	50”	52”

Chimney Size (I.D.)	38”	40”	42”	44”	46”	48”
Hole size	56”	58”	60”	62”	64”	66”

The Minimum Hole Size (1400°F flue gas)

Chimney Size (I.D.)	6”	8”	10”	12”	14”	16”	18”	20”
Hole size	12”	14”	16”	18”	24”	28”	32”	34”

Chimney Size (I.D.)	22”	24”	26”	28”	30”	32”	34”	36”
Hole size	38”	40”	42”	44”	46”	48”	50”	52”

Chimney Size (I.D.)	38”	40”	42”	44”	46”	48”
Hole size	56”	58”	60”	62”	64”	66”

ROOF FLASHING (FF, FA, FB, FC)

1. Put the roof flashing in place. Seal the joint between the roof and the flashing with roofing pitch.

   For sloping roofs, place the flashing under the upper shingles and on the top of the lower shingles.

2. Nail the flashing to the roof using roofing nails.

3. Place the storm collar over the chimney and the flashing. Tighten it with the bolt supplied making sure the joint is properly caulked.

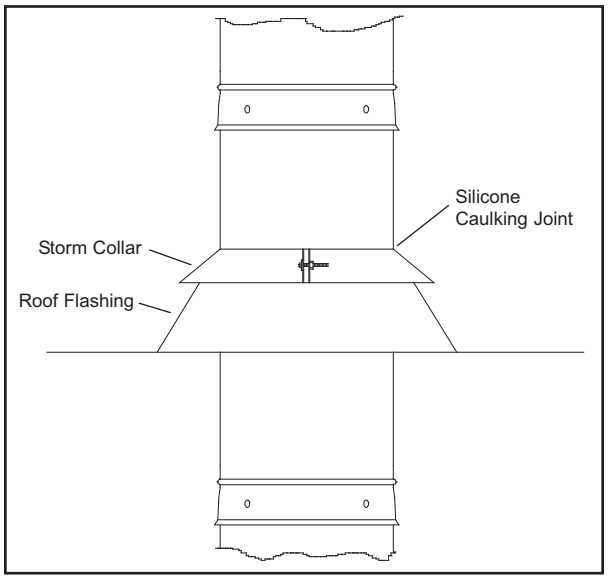

RAIN CAP (RC) AND EXIT CONE (EC)

A chimney must be terminated using either a Rain Cap or an Exit Cone. If an Exit Cone is installed, then a Drain Tee Cap (DT) must be installed.

1. Fit the Cap or Cone on to the top chimney length.

2. Screw the stainless steel metal screws (supplied with the cap) through the prepunched holes in the bottom of the cap and into the lower length. Be sure to use a metal screw in each prepunched hole.

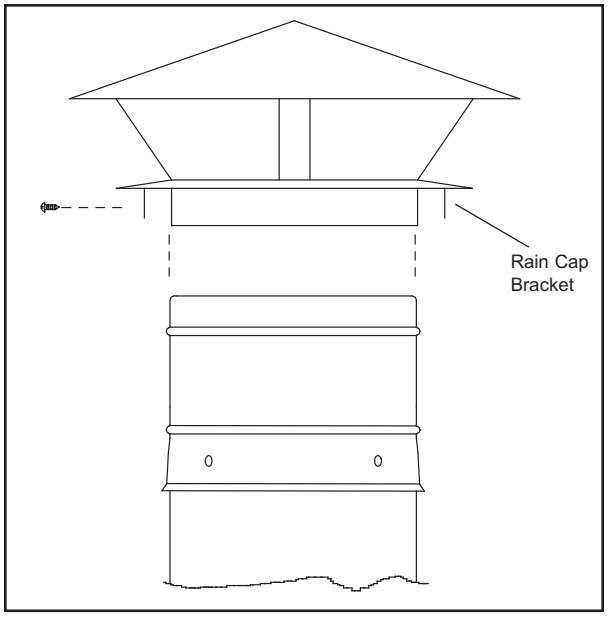

ADJUSTABLE LENGTH (A1, A2)

The adjustable length is to allow the chimney to fit in a fixed distance when a suitable standard length is not available. Typical applications are between two elbows when a fixed offset distance is required or between two boiler outlet flanges which are a fixed distance apart.

The length of the outer casing of the adjustable length must be set before it is installed. The adjustable length is installed by sliding the flue (inner stainless steel) into the section below it after the two piece outer casing has been adjusted to the correct overall length. The adjustable length should be installed with a straight chimney section below it, there is not sufficient room for it to adjust into a tee or elbow.

1. Measure the exact length required, be sure to allow for the overlap between chimney sections.

2. Slide the two piece outer casing together until the correct overall length is achieved.

3. Fasten the two casing sections together using the stainless steel sheet metal screws provided. Be sure to put a screw and sealant in each pre-punched hole.

4. Cut off the exposed insulation. You do not need to remove any extra insulation in order to allow for overlap, the insulation will compress sufficiently when assembled.

5. Slide the flue into the length below it and fasten the exterior together in the same manner as a conventional chimney section. It may require somewhat more effort to connect the adjustable length since you are compressing the insulation at the same time.

BOILER_EXHAUST

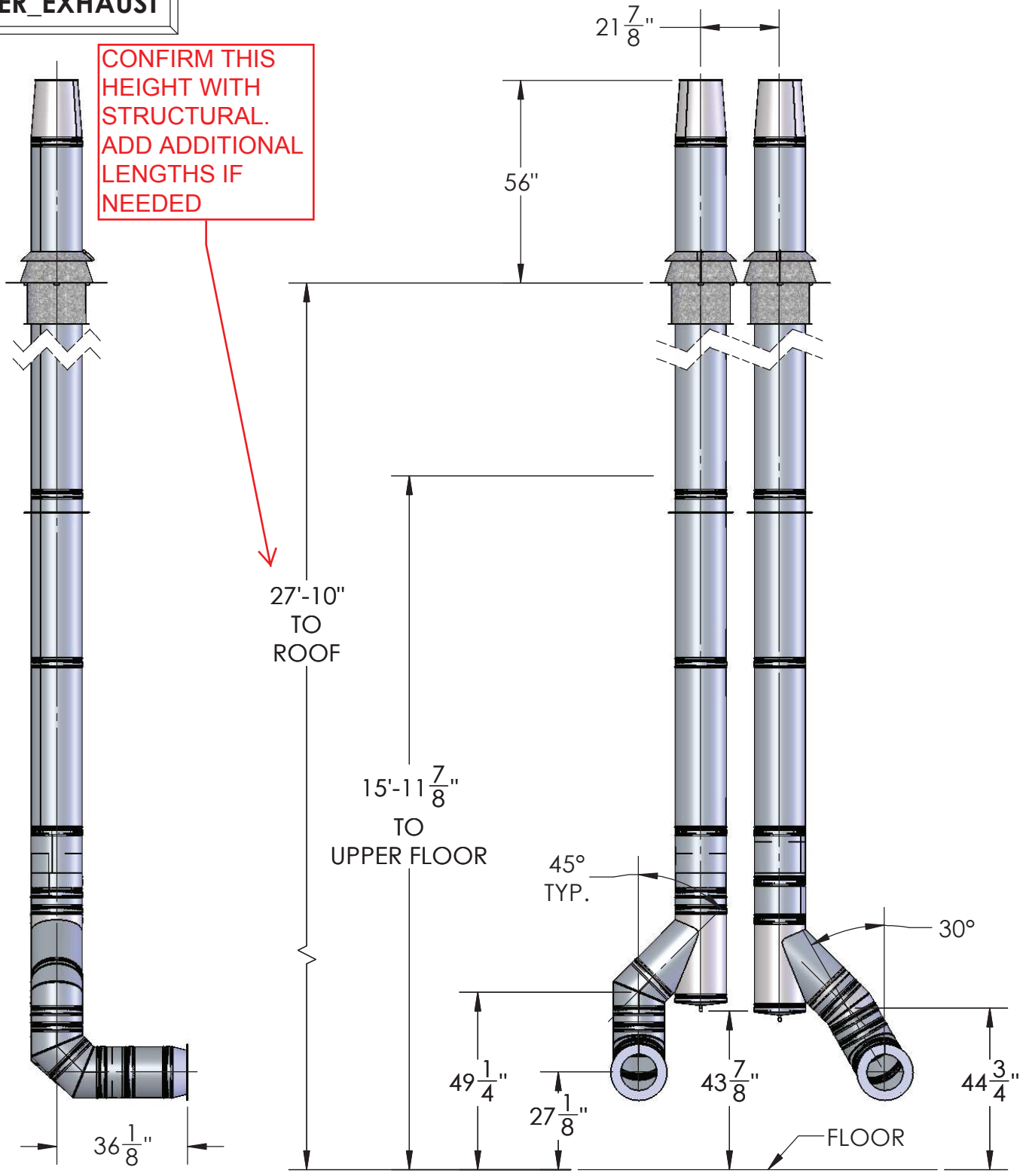

	SUPPLIER: **ENER-CHEM**	MODEL: **VIP - 2" INSULATION**
	PROJECT: **IQUALUIT WWTP**	MATERIAL: INT: **SS 304** EXT: **SS 304**
	REVISION:	PART: **10" - I.D. CHIMNEY SYSTEM**
	DATE: **MAY 30, 2018**	
DRAWING BY: **YANNICK VINCENT**	DRAWING No: **1 OF 3**	CODE: **QT00316024**

BOILER_EXHAUST

#	PART #	DESCRIPTION	QTY
1	VC-10A2A26A262	24" ADJUSTABLE LENGTH	2
2	VC-10L1A26A262	12" LENGTH	3
3	VC-10A1A26A262	12" ADJUSTABLE LENGTH	2
4	VC-10L6A26A262	6" LENGTH	4
5	VE-10E4A24A242	ELBOW 45°	5
6	VE-10E1A24A242	ELBOW 15° #	1
7	VE-10TYA20A242	TEE 45°	2
8	VE-10TDA24A242	DRAIN TEE CAP	2
9	VF-12FF000C241	FLAT FLASHING	2
10	VM-12SC000C241	STORM COLLAR	2
11	VM-12BS000C221	BASE SUPPORT	6
12	VM-10APA24A242	ANCHOR PLATE	2
13	VM-10ECA24A242	EXIT CONE	2
14	VM-12RS000C241	RADIATION SHIELD	2
15	VM-12FS000C241	FIRESTOP	4
16	VC-10L4A26A262	48" LENGTH	12

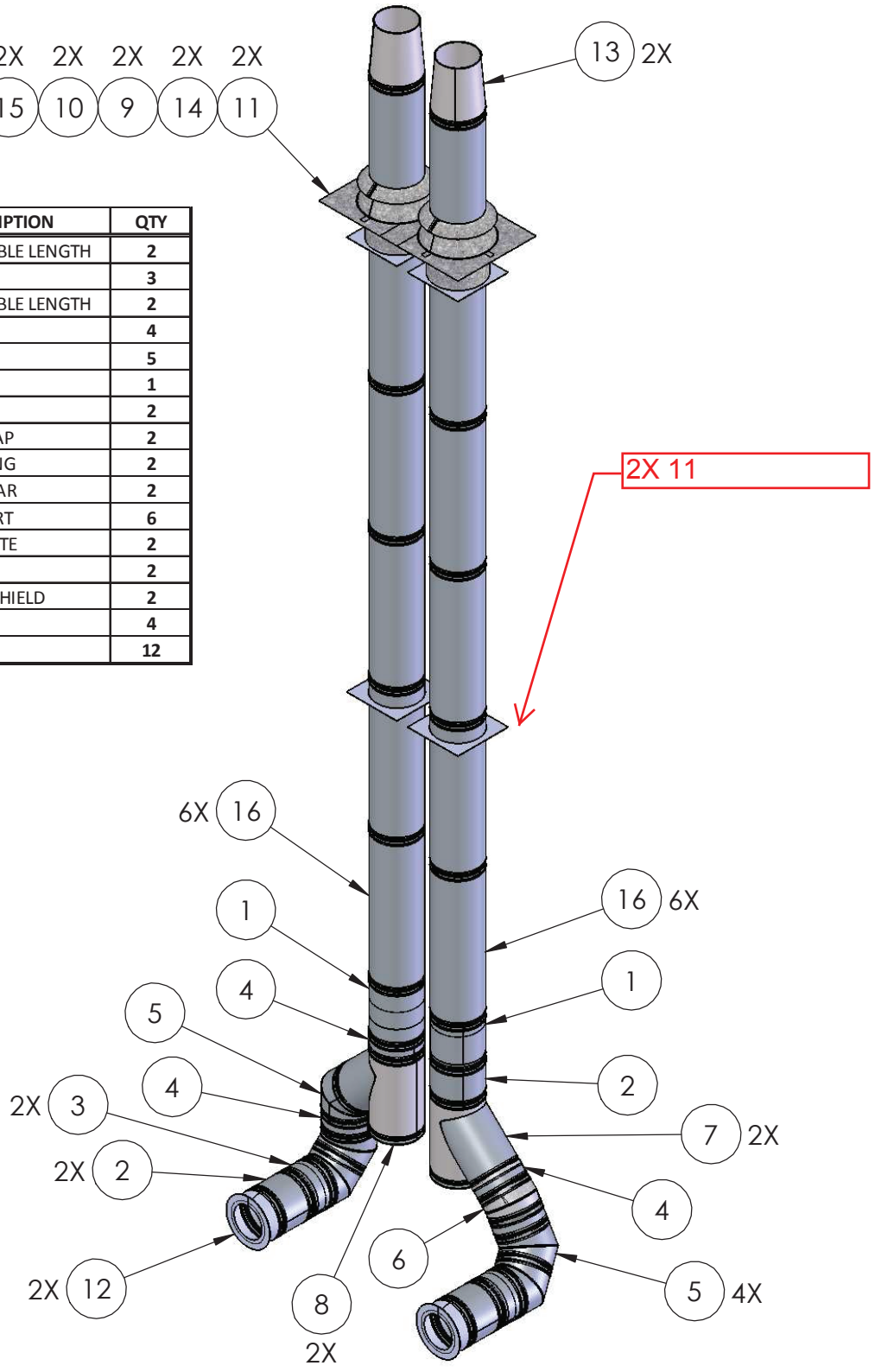

		SUPPLIER: ENER-CHEM	MODEL: VIP - 2" INSULATION
		PROJECT: IQUALUIT WWTP	MATERIAL: INT: SS 304 EXT: SS 304
		REVISION:	PART: 10" - I.D. CHIMNEY SYSTEM
		DATE: MAY 30, 2018	
DRAWING BY: YANNICK VINCENT		DRAWING No: 2 OF 3	CODE: QT00316024

WATER HEATER_EXHAUST

#	PART #	DESCRIPTION	QTY
1	VC-08L4A26A262	48" LENGTH	5
2	VC-08L2A26A262	24" LENGTH	1
3	VE-08E4A24A242	ELBOW 45°	3
4	VE-08TRA20A242	REGULAR TEE	1
5	VE-08TDA24A242	DRAIN TEE CAP	1
6	VF-10FF000C241	FLAT FLASHING	1
7	VM-10SC000C241	STORM COLLAR	1
8	VM-10BS000C221	BASE SUPPORT	2
9	VM-08APA24A242	ANCHOR PLATE	1
10	VS-08EXA24A242-NC	FLUE EXTENSION, NO CRIMP	1
11	VM-08ECA24A242	EXIT CONE	1
12	VM-10RS000C241	RADIATION SHIELD	1
13	VM-10FS000C241	FIRESTOP	1
14	VE-08TYA20A242	TEE 45°	1

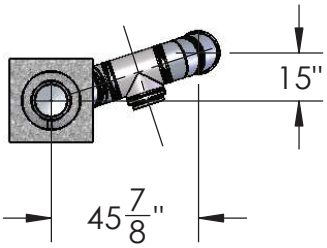

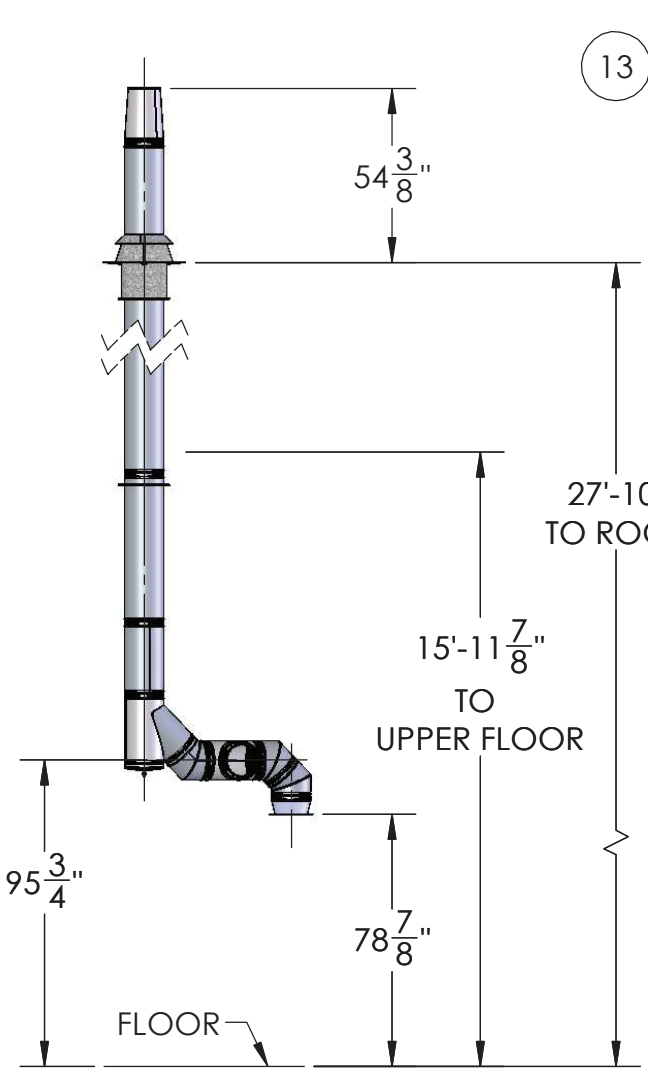

CONFIRM THIS HEIGHT WITH STRUCTURAL. ADD ADDITIONAL LENGTHS IF NEEDED

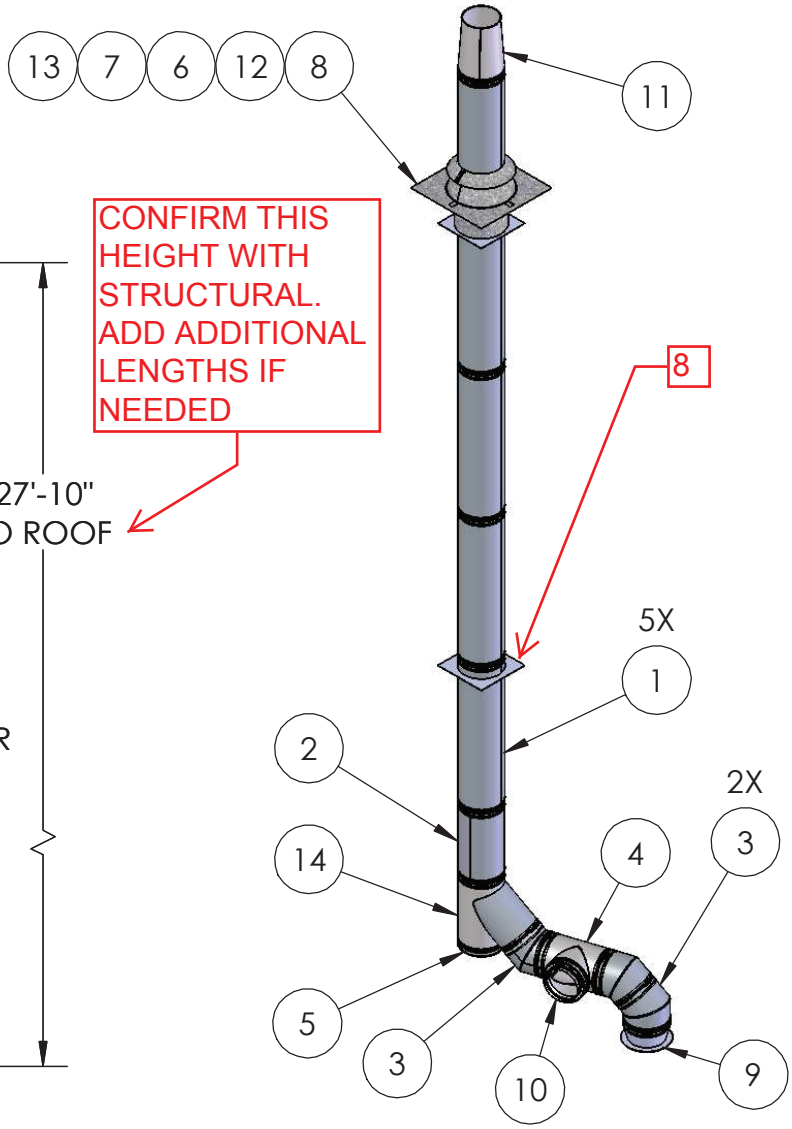

		SUPPLIER: ENER-CHEM	MODEL: VIP - 2" INSULATION
		PROJECT: IQUALUIT WWTP	MATERIAL: INT: SS 304 EXT: SS 304
		REVISION:	PART: 8" - I.D. CHIMNEY SYSTEM
		DATE: MAY 30, 2018	
DRAWING BY: YANNICK VINCENT		DRAWING No: 3 OF 3	CODE: QT00316029

Mécanique Nordique
Plumbing
Heating
Ventillation
mecanique.nordique@hotmail.com
1255 Rue J.A.Bombardier Lévis QC G7A 2P4
Tél : (418) 496-1109 Fax : (418) 496-3803

REVIEWED BY CONTRACTOR
Kudlik Construction Ltd.
NAME: Sandra Rousseau P.Eng
DATE: Jun 01, 2018

IQUALUIT WWTP UPGRADES

DRAWING FOR APPROVAL

ENGINEER: **NUNAMI STANTEC LIMITED**

DRAWING #: AD-007

Section	: 23 21 23
Article	: 2.1 & 2.2
Plans	: M802 PUMP SCHEDULE
Application	: HYDRONIC PUMPS
Brand	: GRUNDFOS
Model	: UPS 100-40 FB , PACO 25709 PL , UPS 4080/4 F
Revised #	:
Supplyer	: WOLSELEY
Date	: **01/06/2018**
By	: Martin Boucher

STANTEC PROJECT #: 110126045
SUBMITTAL # AD-007

This review by Stantec is for general conformance with the design concept of Stantec's design of the:
- ☐ Architectural
- ☐ Structural
- ☑ Mechanical
- ☐ Electrical
- ☐ Other

component(s) only and does not mean that Stantec has verified or approves the shop drawing(s). The Contractor remains solely responsible for the shop drawing(s) and this review by Stantec does not relieve the Contractor of the Contractor's responsibility for errors or omissions in the shop drawing(s) or for meeting all requirements of the contract documents. This review does not mean that Stantec approves the detailed design inherent in the shop drawing, responsibility for which shall remain with the Contractor submitting same, nor does this review mean that Stantec accepts any deviation of the shop drawing(s) from the contract documents. The Contractor is responsible for confirming all dimensions and correlating them at the job site, for all construction means, methods and techniques, and for coordination of construction work of all trades, including coordination of all shop drawings.

Stantec

- ☐ REVIEWED
- ☑ REVIEWED, AS NOTED
- ☐ REVISE AND RESUBMIT
- ☐ NOT REVIEWED

DATE 2018-06-05
BY Brendan Zrum, P.Eng

GRUNDFOS

Company name: Grundfos Canada
Created by: Louis Pelletier
Phone:
Email: lpelletier@grundfos.com
Date: 5/30/2018

Position	Count	Description
	1	**UPS 100-40 F B**

TAG: P-1.1 & P-1.2
HYDRONIC PUMPS



Product photo could vary from the actual product

Product No.: 96402934

The pump is of the canned rotor type, i.e. pump and motor form an integral unit without shaft seal and with only two gaskets for sealing.
The bearings are lubricatd by the pumped liquid.

In order to avoid problems in connection with disposal, great importance has been attached to using as few different materials as possible.

SPEC 23 21 23
PUMP SCHEDULE
DRAWING M802

The pump is characterized by:
* 3 speed motor.
* Ceramic radial bearings.
* Carbon axial bearing.
* Stainless steel rotor can, bearing plate and rotor cladding.
* Aluminium alloy stator housing.
* Bronze pump housing.
* Stator with built-in thermal switch.

The motor is a 3-phase motor.

The pump is supplied with a standard module in the terminal box.
The standard module is to be connected to the mains supply via external contactor.

Controls:

Relay:	without relay

Liquid:

Pumped liquid:	Water
Liquid temperature range:	14 .. 248 °F
Liquid temperature during operation:	140 °F
Density:	61.35 lb/ft³

Technical:

Actual calculated flow:	8.158 l/s
Resulting head of the pump:	2.756 m
Approvals on nameplate:	CUL

Materials:

Pump housing:	Cast Iron DIN W.-Nr. 2.1176.01
Impeller:	Stainless steel DIN W.-Nr. 1.4301 AISI 304

Installation:

Range of ambient temperature:	32 .. 104 °F
Maximum operating pressure:	145.04 psi
Flange standard:	ANSI
Type of connection:	F
Pipe connection:	GF 100

GRUNDFOS

Company name: Grundfos Canada
Created by: Louis Pelletier
Phone:
Email: lpelletier@grundfos.com
Date: 5/30/2018

Position	Count	Description

TAG: P-1.1 & P-1.2
HYDRONIC PUMPS

Pressure stage:	145 psi
Port-to-port length:	21 in
Electrical data:	
Power input in speed 1:	390 W
Power input in speed 2:	435 W
Max. power input:	570 W
Main frequency:	60 Hz
Rated voltage:	3 x 208-230 V
Current in speed 1:	1.24 A
Current in speed 2:	1.38 A
Current in speed 3:	2.5 A
Cos phi in speed 1:	0,43
Cos phi in speed 2:	0,41
Cos phi:	0,29
Enclosure class (IEC 34-5):	X4D
Insulation class (IEC 85):	H
Winding resistance:	27.5 - 36.0 ohm
Others:	
Net weight:	140 lb
Gross weight:	165 lb
Shipping volume:	2.51 ft³

Company name: Grundfos Canada
Created by: Louis Pelletier
Phone:
Email: lpelletier@grundfos.com
Date: 5/30/2018

96402934 UPS 100-40 F B 60 Hz

TAG: P-1.1 & P-1.2

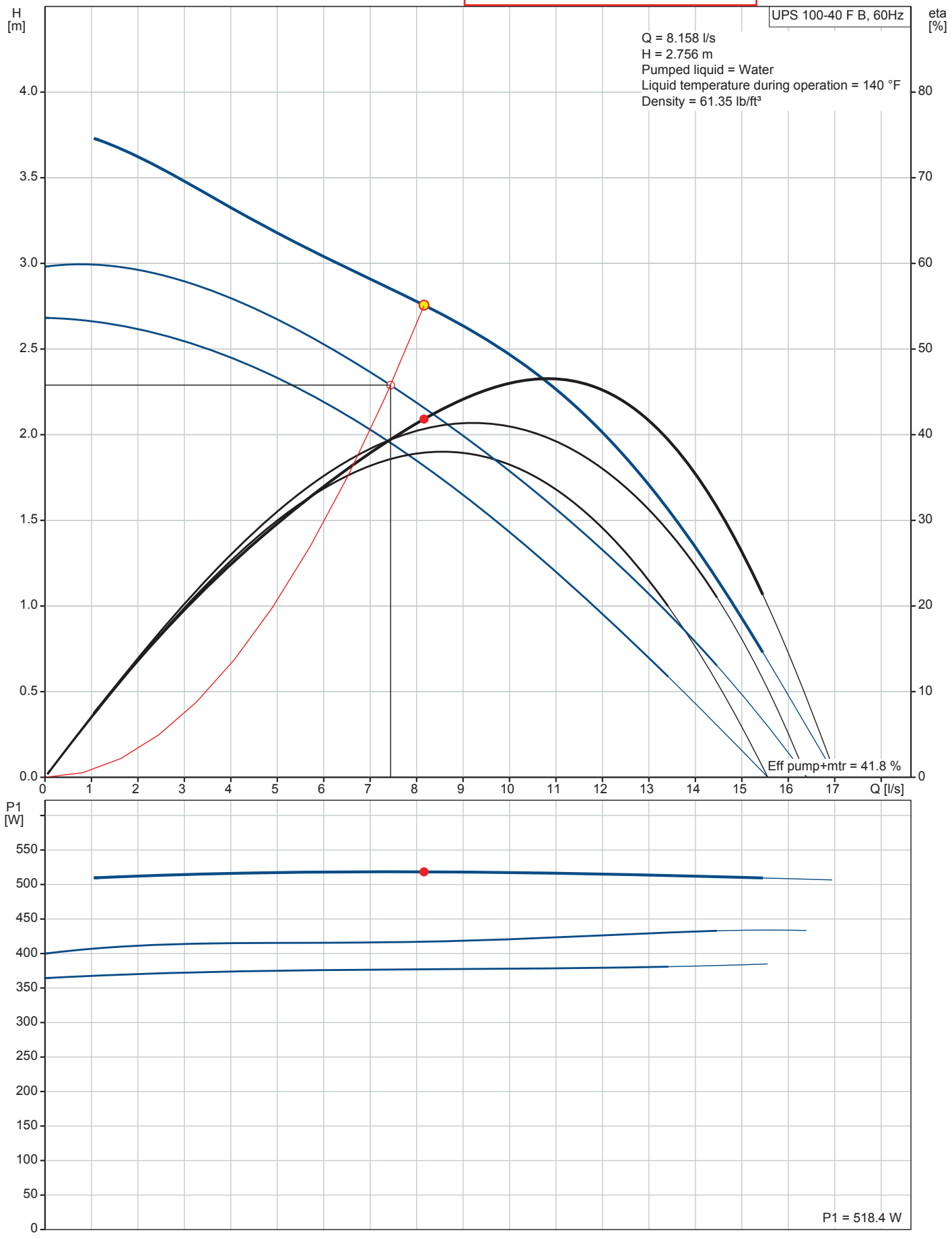

Company name: Grundfos Canada
Created by: Louis Pelletier
Phone:
Email: lpelletier@grundfos.com
Date: 5/30/2018

96402934 UPS 100-40 F B 60 Hz

TAG: P-1.1 & P-1.2
HYDRONIC PUMPS

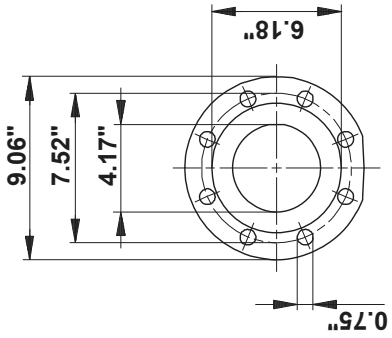

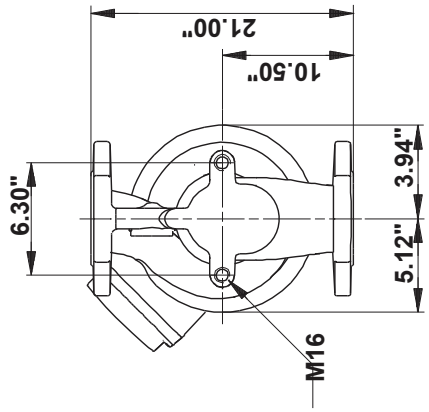

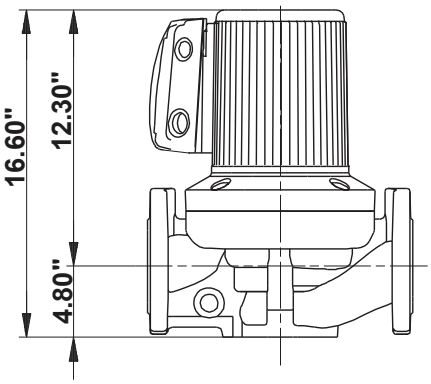

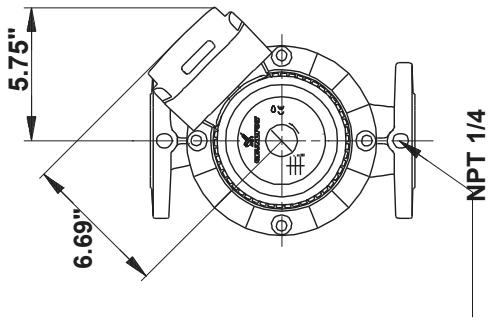

Note! All units are in [mm] unless otherwise stated.
Disclaimer: This simplified dimensional drawing does not show all details.

GRUNDFOS

TAG: P-1.3 & P-1.4

Grundfos Quotation System 18.1.5.0

Pump Performance Datasheet

Customer	:	Quote Number / ID	: 20180530-TD-HJ-001
Customer ref. / PO	:	Model	: 25709 VL
Tag Number	: P-1.3 & P-1.4 HYDRONIC PUMPS	Stages	: 1
Service	:	Based on curve number	: RC9905-1 Rev 1
Quantity	: 1	Date last saved	: May 30, 2018 8:39 AM

Operating Conditions

Flow, rated	: 9.31 l/s
Differential head / pressure, rated (requested)	: 11.14 m
Differential head / pressure, rated (actual)	: 11.14 m
Suction pressure, rated / max	: 0.00 / 0.00 psi.g
NPSH available, rated	: Ample
Frequency	: 60 Hz

Performance

Speed, rated	: 1765 rpm
Impeller diameter, rated	: 6.46 in
Impeller diameter, maximum	: 7.10 in
Impeller diameter, minimum	: 5.00 in
Efficiency	: 72.06 %
NPSH required / margin required	: 5.71 / 0.00 ft
nq (imp. eye flow) / S (imp. eye flow)	: 23 / 109 Metric units
MCSF	: 2.52 l/s
Head, maximum, rated diameter	: 14.11 m
Head rise to shutoff	: 26.54 %
Flow, best eff. point	: 8.05 l/s
Flow ratio, rated / BEP	: 115.64 %
Diameter ratio (rated / max)	: 90.99 %
Head ratio (rated dia / max dia)	: 75.15 %
Cq/Ch/Ce/Cn [ANSI/HI 9.6.7-2010]	: 1.00 / 1.00 / 1.00 / 1.00
Selection status	: Acceptable

Liquid

Liquid type	: Cold Water
Additional liquid description	:
Solids diameter, max	: 0.00 in
Solids concentration, by volume	: 0.00 %
Temperature, max	: 68.00 deg F
Fluid density, rated / max	: 1.000 / 1.000 SG
Viscosity, rated	: 1.00 cP
Vapor pressure, rated	: 0.34 psi.a

Liquid is 50% Glycol with max temp = 82.2°C

Material

Material selected	: Cast iron - 125#

Pressure Data

Maximum working pressure	: 20.03 psi.g
Maximum allowable working pressure	: 175.0 psi.g
Maximum allowable suction pressure	: 175.0 psi.g
Hydrostatic test pressure	: 263.0 psi.g

Driver & Power Data (@Max density)

Motor sizing specification	: Max power (non-overloading)
Margin over specification	: 0.00 %
Service factor	: 1.00
Power, hydraulic	: 1.36 hp
Rated power (based on duty point)	: 1.89 hp
Max power (non-overloading)	: 1.99 hp
Nameplate motor rating	: 2.00 hp / 1.49 kW

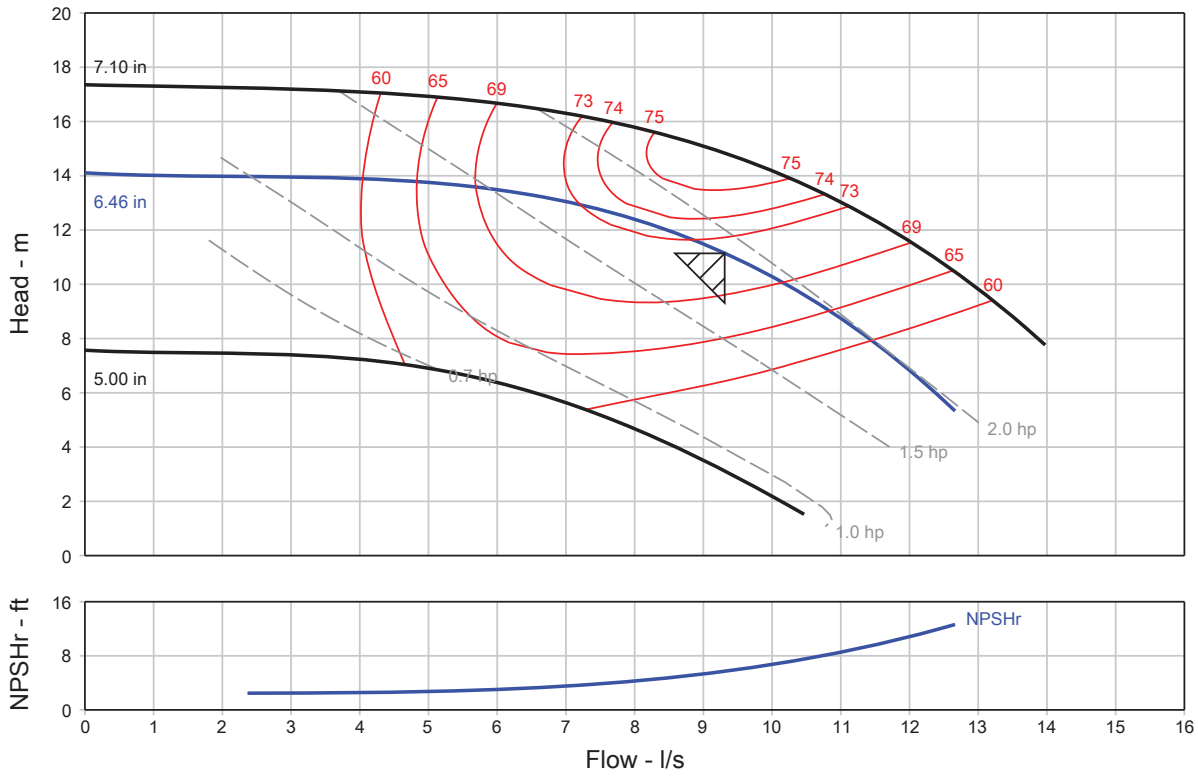

SPEC 23 21 23 PUMP SCHEDULE DRAWING M802

GRUNDFOS Canada Inc. (GCA) · 2941 Brighton Rd. · Oakville, ON L6H 6C9
phone: (905) 829-9533 · fax: (905) 829-9512 · www.GrundfosExpressSuite.com

PACO Series VL - In-Line Centrifugal Pump, Close Coupled

QUOTE NUMBER / ID 20180530-TD-HJ-001	UNIT TAG P-1.3 & P-1.4	VL 25709

MATERIALS OF CONSTRUCTION			
PART	**MATERIAL**	**PART**	**MATERIAL**
Rotation Options	Clockwise	Impeller Washer	S.S., AISI-303
Base/Stand Type	No Stand Provided	Impeller Key	Steel, AISI 1045
Connections	125# ANSI	Sleeve Material	Bronze, III932, C89835 or No Sleeves
Wear Ring Material	NiAl-Bronze, ASTM-B148, C95500	Wear Ring Type	Case Wear Ring
Pump Coatings	Standard Paint	Packing Gland	Not Applicable
NSF-50 Certification	Not Required	Lantern Ring	None
NSF-61 Certification	Not Required	Seal Type	Type 21
Motor Drip Canopy	Provided	Casing	Cast Iron, ASTM-A48, CL 30
Seal Material	Ceramic/Carbon/Buna	O-Rings	Buna N
Motor Shaft	Steel, AISI 1045 or S.S	Seal Flush Options	External Flush, plastic tubing
Backplate/Seal Plate	Cast Iron, ASTM-A48, CL 30	Motor Bracket	Cast Iron, ASTM-A48, CL 30
Gaskets	Vegetable Fiber	Impeller	Silicon Bronze, ASTM-B584, C87600
Casing Bolts	Steel, Grade 5	Impeller Cap Screw	S.S., AISI-303
Comments			

* All materials based on STANDARD configuration

Construction Datasheet

Project name	: 20180530-TD-HJ-001	Tag Number	: P-1.3 & P-1.4
Consulting engineer	:	Service	:
Customer	:	Model	: 25709 VL
Customer ref. / PO	:	Quantity	: 1
Quote Number / ID	: 20180530-TD-HJ-001	Quoted By (Sales Office)	: Grundfos Canada Inc. (GCA)
Date last saved	: May 30, 2018 8:39 AM	Quoted By (Sales Engineer)	: H J

Construction

Nozzle	Size (in.)	Nozzle Configuration	Pos'n
Suction	2.5	125# ANSI	Side
Discharge	2.5	125# ANSI	Side

Orientation / Configuration	: Vertical
Rotation	: Clockwise
Wear Ring Configuration	: Single - Case
Discharge Elbow Size	: -
Subplate	: -
Sump Depth (feet)	: -
Bearing Frame	: -
Bearing Frame Foot	: -
Bearing Type (Radial/Thrust)	: In motor
Bearing Lubrication	: Regreasable
Thrust Bearing	: -
Intermediate Bearing	: -
Lower Bearing	: -
Bearing Housing Accessories	: -
PACO Construction code	: 16-25709-130101-1552P

Baseplate, Coupling and Guard

Baseplate	: Not Applicable
Drip Pan	: -
Coupling	: -
Guard	: OSHA Approved

Seal & Packing Construction

Sealing Method	: Single Seal, Type 21S
Seal Material	: Buna Carbon Ceramic SS-Spring and Hardware
Packing Gland	: -
Lantern Ring	: -
Recirculation Lines	: Copper Tubing with Brass Fittings

Weights (Approx.)

Pump	: 91.00 lb
Baseplate	: -
Driver	: 51.00 lb
Estimated Shipping gross weight	: 142.0 lb

Motor Information

Manufacturer	: Baldor
Frame Size	: 145JM
Power	: 2.00 hp
RPM	: 1800 rpm
Enclosure	: ODP
Operating Power Supply	: 200/3/60
Efficiency	: Premium
Service factor	: 1.15
Motor Application	: General Purpose
Motor Options/Accessories	: -
Cord Length (feet)	: -

Materials

Case	: Cast Iron, ASTM A48 - Class 30
Motor Bracket	: Cast Iron, ASTM-A48, CL 30
Impeller	: Silicon Bronze, ASTM B584 C87600 (B21)
Impeller Cap Screw and Washer	: Stainless Steel, AISI-303
Impeller Key	: Steel, Cold Drawn C1018
Case wear ring	: Tin Bronze, ASTM B584-90500 (B18)
Impeller wear ring	: -
Pump Shaft	: Steel, AISI-1040
Sleeve	: Bronze, III932, C89835
Line Shaft	: -
Column	: -
Discharge Pipe	: -
Discharge Elbow	: -
Suction Elbow	: -
Subplate	: -
Hardware	: Steel, Grade 5
O Rings	: Buna N
Pump Coatings	: Standard Manufacturers Paint

General Arrangement

Project name	: 20180530-TD-HJ-001	Tag Number	: P-1.3 & P-1.4
Consulting engineer	:	Service	:
Customer	:	Model	: 25709 VL
Customer ref. / PO	:	Quantity of pumps	: 1
Quote Number / ID	: 20180530-TD-HJ-001	Quoted By (Sales Office)	: Grundfos Canada Inc. (GCA)
Date last saved	: May 30, 2018 8:39 AM	Quoted By (Sales Engineer)	: H J

Do not install pump larger than 215JM in vertical piping.

Pressure and drain tap locations are approximate.

Suction and discharge flanges, are cast per 250# ANSI thickness and diameter. All flanges are flat face. Some holes may be threaded because of nut clearances.

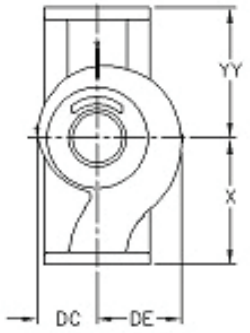

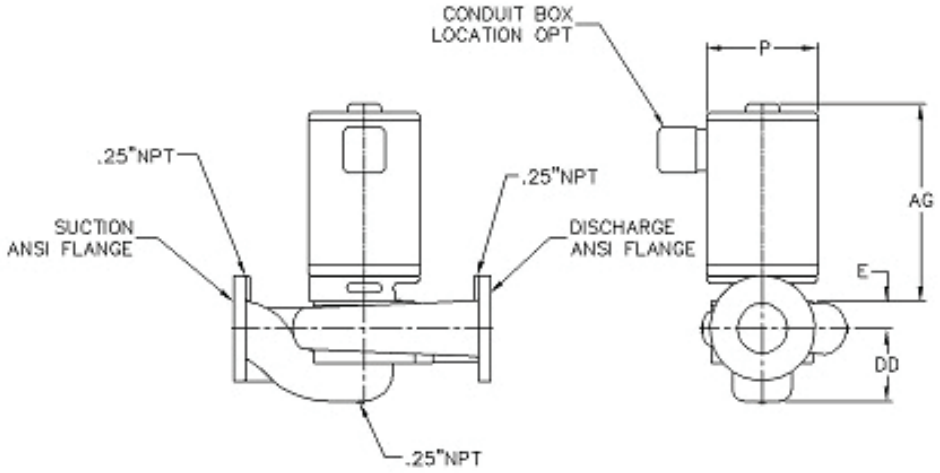

NOT FOR CONSTRUCTION, Unless certified and referenced on order

Units	Frame	S x D (in.)	AG (Max)	DC	DD	DE	E	P (Max)	X	YY	Weight ea
inches	**145JM**	**2.5 X 2.5**	**18.00**	**4.75**	**5.84**	**5.50**	**1.75**	**8.00**	**8.50**	**8.50**	**142.0**

Conditions of Service		Motor Data			
Flow: 9.31 l/s	Fluid: Cold Water	HP: 2	Encl: ODP	Phase: 3	Efficiency: Premium
TDH: 11.14 m	Temp.: 68.00 deg F	RPM: 1765 rpm	Hz: 60	Voltage: 200	S.F.: 1.15

GRUNDFOS

Company name: Grundfos Canada
Created by: Louis Pelletier
Phone:
Email: lpelletier@grundfos.com
Date: 5/30/2018

Position	Count	Description
	1	**UPS 40-80/4 F**

TAG: P-1.6
HYDRONIC PUMP



Product photo could vary from the actual product

Product No.: 96404950

The pump is of the canned rotor type, i.e. pump and motor form an integral unit without shaft seal and with only two gaskets for sealing.
The bearings are lubricatd by the pumped liquid.

In order to avoid problems in connection with disposal, great importance has been attached to using as few different materials as possible.

SPEC 23 21 23
PUMP SHEDULE
DRAWING M802

The pump is characterized by:

* 3 speed motor.
* Ceramic radial bearings.
* Carbon axial bearing.
* Stainless steel rotor can, bearing plate and rotor cladding.
* Aluminium alloy stator housing.
* Cast iron pump housing.
* Stator with built-in thermal switch.

The motor is a 3-phase motor.

The pump is supplied with a standard module in the terminal box.
The standard module is to be connected to the mains supply via external contactor.

Controls:

Relay:	without relay

Liquid:

Pumped liquid:	Water
Liquid temperature range:	14 .. 248 °F
Liquid temperature during operation:	140 °F
Density:	61.35 lb/ft³

Technical:

Actual calculated flow:	2.971 l/s
Resulting head of the pump:	6.364 m
Approvals on nameplate:	CUL

Materials:

Pump housing:	Cast iron EN-JL1040 ASTM 35 B - 40 B
Impeller:	Stainless steel DIN W.-Nr. 1.4301 AISI 304

Installation:

Range of ambient temperature:	32 .. 104 °F
Maximum operating pressure:	145.04 psi
Flange standard:	USA Oval
Type of connection:	F

GRUNDFOS

Company name: Grundfos Canada
Created by: Louis Pelletier
Phone:
Email: lpelletier@grundfos.com
Date: 5/30/2018

Position	Count	Description

TAG: P-1.6
HYDRONIC PUMP

Pipe connection:	GF 40/43
Pressure stage:	145 psi
Port-to-port length:	13 1/2 in
Electrical data:	
Power input in speed 1:	305 W
Power input in speed 2:	370 W
Max. power input:	550 W
Main frequency:	60 Hz
Rated voltage:	3 x 208-230 V
Current in speed 1:	1 A
Current in speed 2:	1.2 A
Current in speed 3:	1.98 A
Cos phi in speed 1:	0,77
Cos phi in speed 2:	0,77
Cos phi:	0,7
Number of poles:	4
Enclosure class (IEC 34-5):	X4D
Insulation class (IEC 85):	H
Winding resistance:	46.5 - 61.0 ohm
Others:	
Net weight:	47.6 lb
Gross weight:	53.4 lb
Shipping volume:	3.46 ft³
Country of origin:	DE
Custom tariff no.:	8413.70.10.90

GRUNDFOS

Company name: Grundfos Canada
Created by: Louis Pelletier
Phone:
Email: lpelletier@grundfos.com
Date: 5/30/2018

96404950 UPS 40-80/4 F 60 Hz

TAG: P-1.6

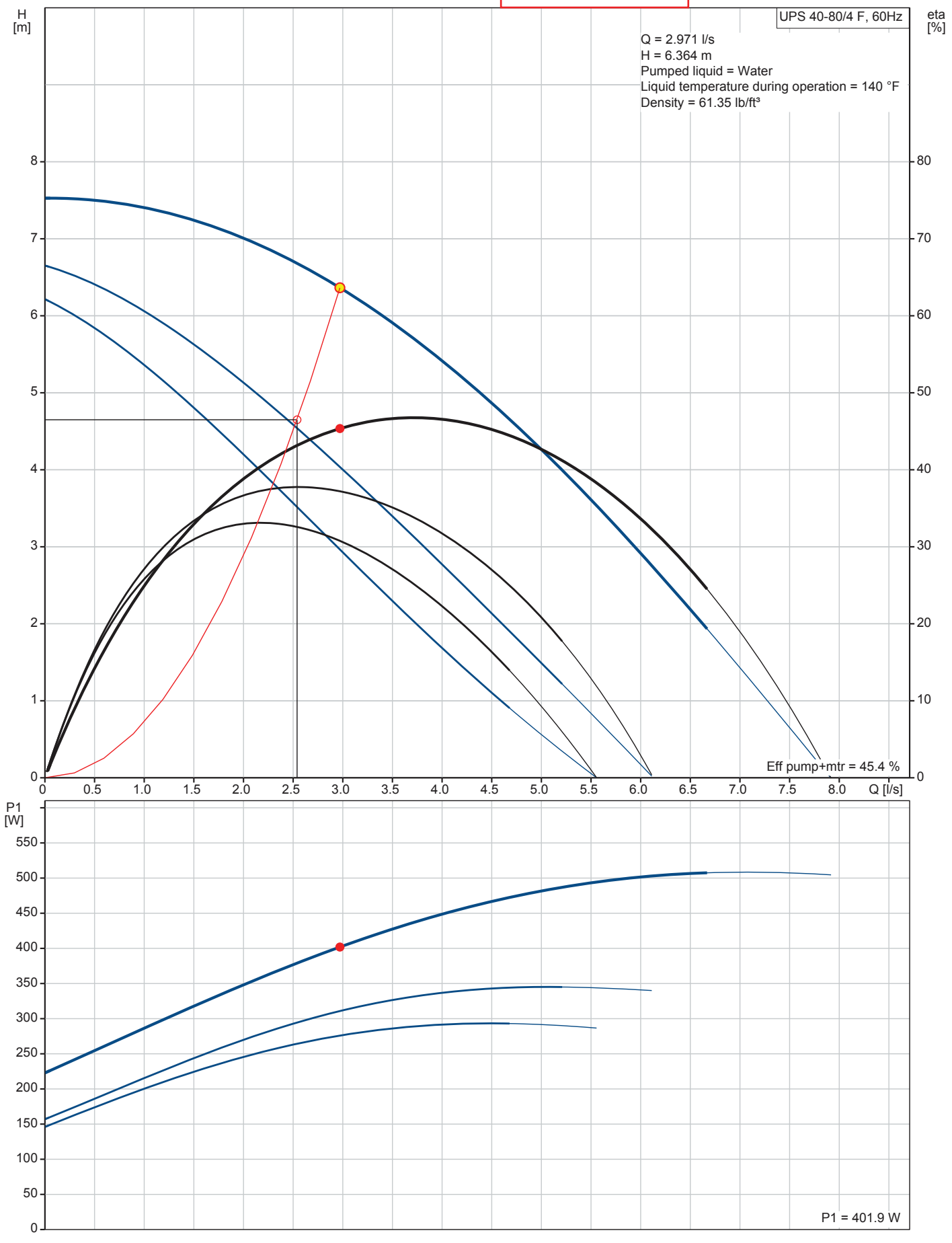

Company name: Grundfos Canada
Created by: Louis Pelletier
Phone:
Email: lpelletier@grundfos.com
Date: 5/30/2018

96404950 UPS 40-80/4 F 60 Hz

TAG: P-1.6
HYDRONIC PUMP

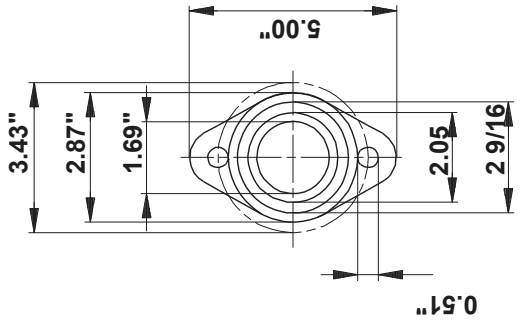

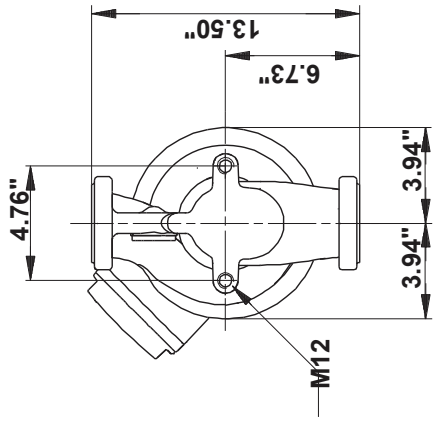

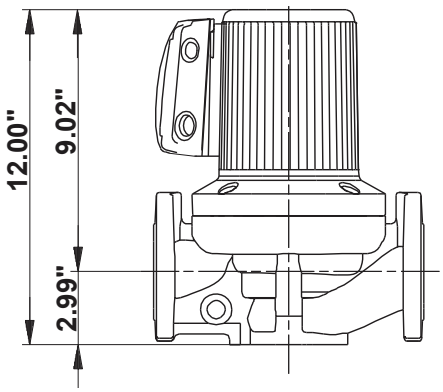

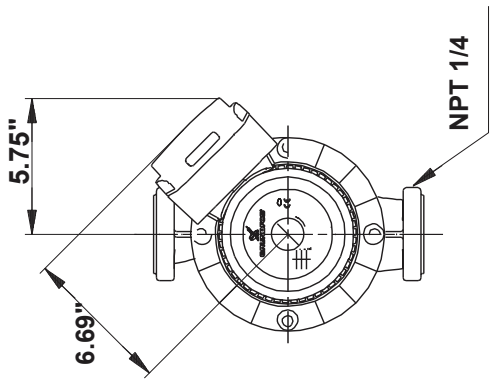

Note! All units are in [mm] unless otherwise stated.
Disclaimer: This simplified dimensional drawing does not show all details.

Mécanique Nordique
Plumbing Heating Ventillation
mecanique.nordique@hotmail.com
1255 Rue J.A.Bombardier Lévis QC G7A 2P4
Tél : (418) 496-1109 Fax : (418) 496-3803

REVIEWED BY CONTRACTOR
Kudlik Construction Ltd.
NAME: Sandra Rousseau P.Eng
DATE: Jun 01, 2018

IQUALUIT WWTP UPGRADES

DRAWING FOR APPROVAL

ENGINEER: **NUNAMI STANTEC LIMITED**

DRAWING #: AD-008

Section	: 22 10 10
Article	: 2.1 & 2.2
Plans	: M802 PUMP SCHEDULE
Application	: PLUMBING PUMPS
Brand	: GRUNDFOS
Model	: TP 40-40/4B , ALPHA2 15-55 SF , UPS 40-40 FB ,
Revised #	:
Supplyer	: WOLSELEY
Date	: **01/06/2018**
By	: Martin Boucher

STANTEC PROJECT #: 110126045
SUBMITTAL # AD-008

This review by Stantec is for general conformance with the design concept of Stantec's design of the:
☐ Architectural ☐ Electrical
☐ Structural ☐ Other
☑ Mechanical

component(s) only and does not mean that Stantec has verified or approves the shop drawing(s). The Contractor remains solely responsible for the shop drawing(s) and this review by Stantec does not relieve the Contractor of the Contractor's responsibility for errors or omissions in the shop drawing(s) or for meeting all requirements of the contract documents. This review does not mean that Stantec approves the detailed design inherent in the shop drawing, responsibility for which shall remain with the Contractor submitting same, nor does this review mean that Stantec accepts any deviation of the shop drawing(s) from the contract documents. The Contractor is responsible for confirming all dimensions and correlating them at the job site, for all construction means, methods and techniques, and for coordination of construction work of all trades, including coordination of all shop drawings.

Stantec

☑ REVIEWED
☐ REVIEWED, AS NOTED
☐ REVISE AND RESUBMIT
☐ NOT REVIEWED

DATE 2018-06-04
BY Brendan Zrum, P.Eng

GRUNDFOS

Company name: Grundfos Canada
Created by: Louis Pelletier
Phone:
Email: lpelletier@grundfos.com
Date: 5/30/2018

Position	Count	Description
	1	**TP 40-40/4 B A-G-Z-BUBE**

TAG: P-3.1 & P-3.2
PLUMBING PUMPS
SPEC 22 10 10 2.2
PUMP SCHEDULE M802



Product No.: On request

Single-stage centrifugal volute in-line single-head pump:
- neck rings and impeller made of stainless steel
- cataphoresis treatment
- shell coupling
- top-pull-out principle for easy maintenance
- optimized hydraulics
- in-line design with opposite suction and discharge ports enabling mounting in pipework or on a concrete foundation
- corrosion resistant maintenance-free mechanical shaft seal.

The motor is a 1-phase AC motor.

Liquid:

Pumped liquid:	Water
Liquid temperature range:	5 .. 284 °F
Liquid temperature during operation:	68 °F
Density:	62.29 lb/ft³

Technical:

Speed for pump data:	1770 rpm
Actual calculated flow:	1.7 l/s
Resulting head of the pump:	3.477 m
Primary shaft seal:	BUBE
Approvals on motor nameplate:	UL Recognized Component, CSA
Curve tolerance:	ISO9906:2012 3B

Materials:

Pump housing:	Bronze DIN W.-Nr. 2.1093
Impeller:	Stainless steel DIN W.-Nr. 1.4301 AISI 304

Installation:

Maximum ambient temperature:	104 °F
Maximum operating pressure:	145.04 psi
Flange standard:	USA
Pipe connection:	1 1/2"

Electrical data:

Motor type:	Baldor, TEFC
Rated power - P2:	0.25 kW
Main frequency:	60 Hz
Rated voltage:	1 x 115/230 V
Service factor:	1,35
Rated current:	6/3 A
Rated speed:	1725 rpm
Number of poles:	4
Insulation class (IEC 85):	B

Others:

Net weight:	60.2 lb
Gross weight:	66 lb
Shipping volume:	1.98 ft³

Company name: Grundfos Canada
Created by: Louis Pelletier
Phone:
Email: lpelletier@grundfos.com
Date: 5/30/2018

On request TP 40-40/4 B A-G-Z-BUBE 60 Hz

TAG: P-3.1 & P-3.2

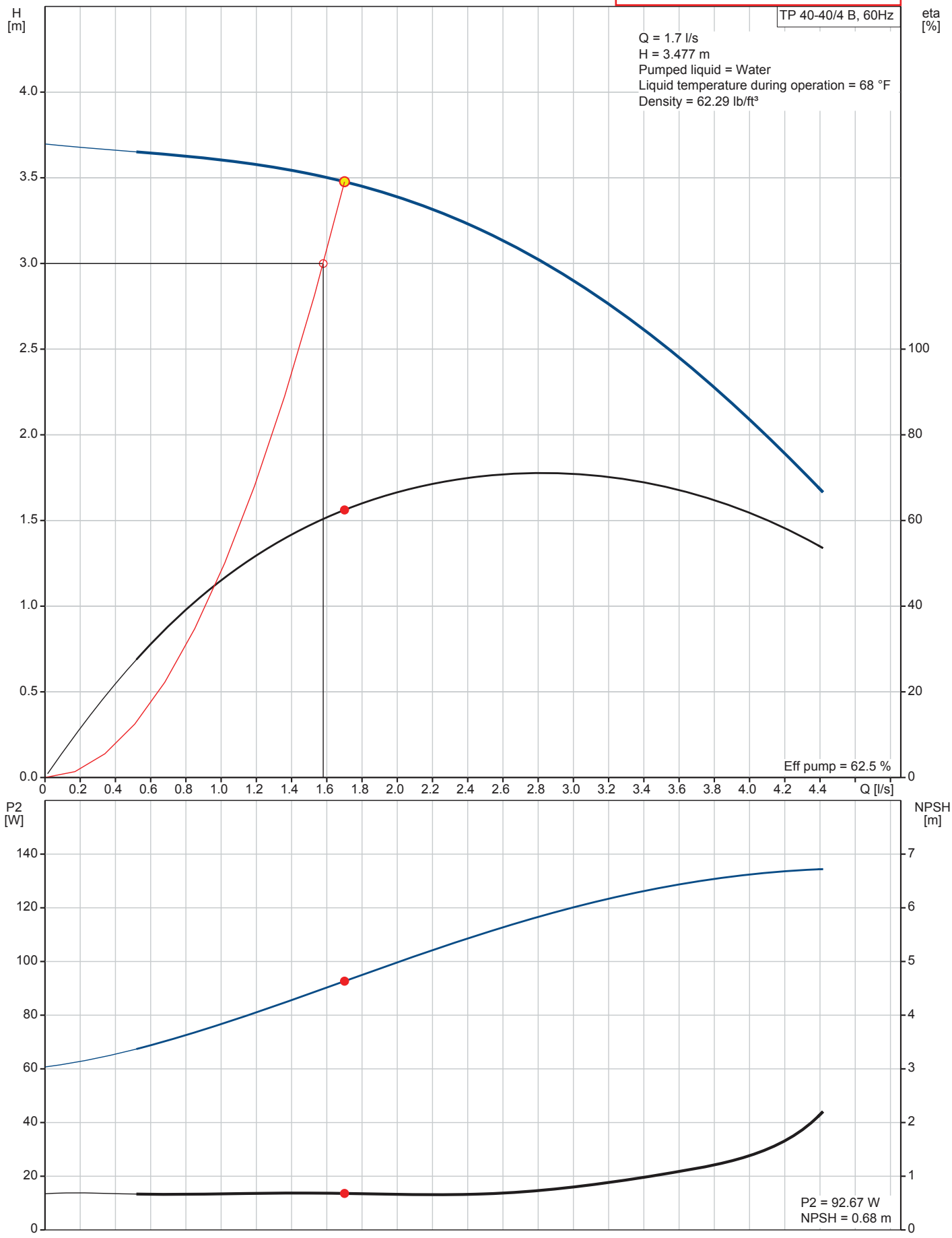

Company name: Grundfos Canada
Created by: Louis Pelletier
Phone:
Email: lpelletier@grundfos.com
Date: 5/30/2018

On request TP 40-40/4 B A-G-Z-BUBE 60 Hz

TAG: P-3.1 & P-3.2

PLUMBING PUMPS

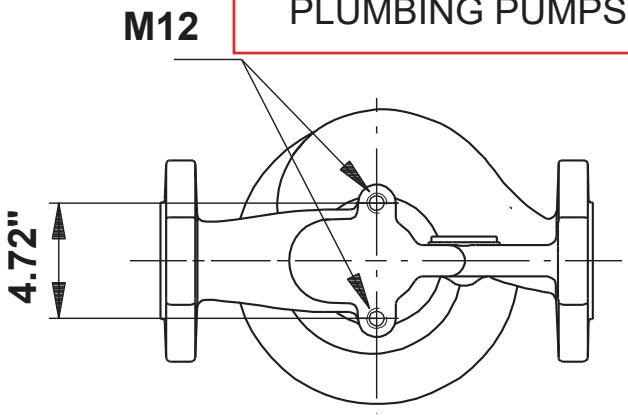

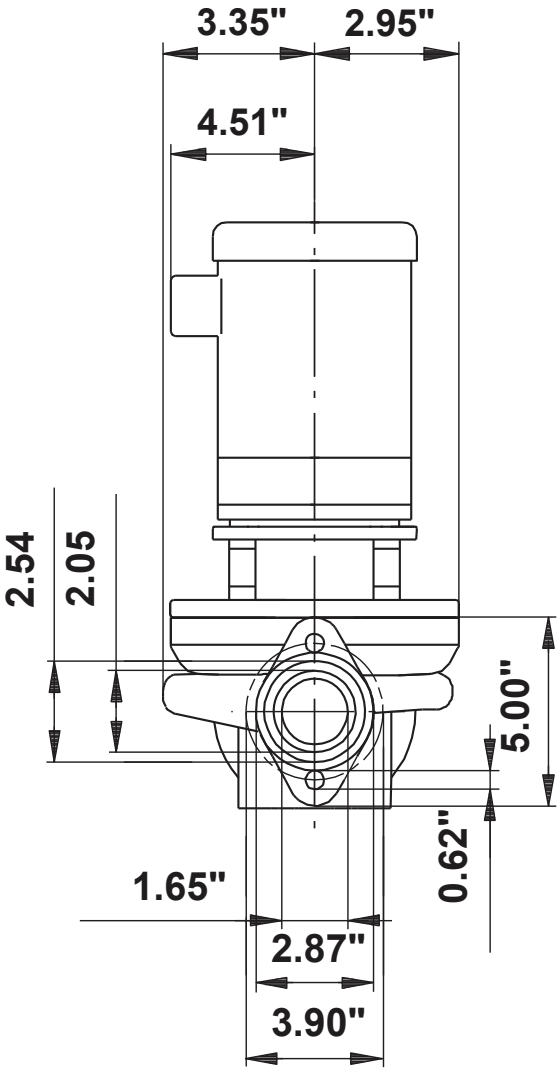

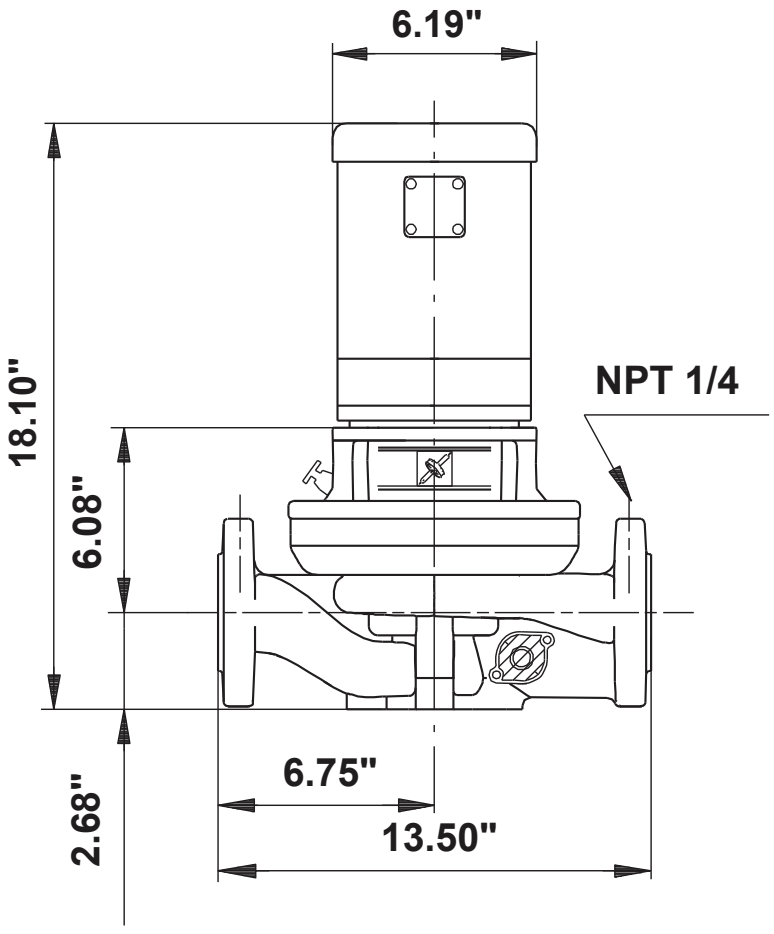

Note! All units are in [mm] unless otherwise stated.
Disclaimer: This simplified dimensional drawing does not show all details.

GRUNDFOS

Company name: Grundfos Canada
Created by: Louis Pelletier
Phone:
Email: lpelletier@grundfos.com
Date: 5/30/2018

Position	Count	Description
→	1	**ALPHA2 15-55SF**

TAG: P-3.3
PLUMBING PUMP
SPEC 22 10 10 2.1
PUMP SCHEDULE M802



Product No.: 99163937

GRUNDFOS ALPHA2
The next generation of energy efficient circulators.

Grundfos ALPHA2 is versatile and efficient whether you use one of its seven speed or pressure control settings or simply leave it on the factory setting AUTOADAPT™.
The ALPHA2 with its ECM motor design reduces energy consumption by 50%.

In AUTOADAPT mode, the pump will automatically analyze the heating system,
find the optimum setting, continue to adjust its operation to changes in demand, ensuring the lowest possible energy consumption without
sacrificing comfort.

Compact design
With the electronics integrated into the motor housing and standard 2-Bolt flange connection, installation into confined spaces and challenging applications are now possible.
The ALPHA2 materials and design resist blockage from magnetite and iron oxide particles found in closed hydronic systems.

ALPHA2 is complete with an integrated check-valve, foam insulation jacket, and nut captures for flanges. ALPHA2 comes in both cast iron and stainless steel models

Two options for power connections
The large LED display shows the current energy consumption in Watts and estimated flow in gallons per minute For installation, you have the flexibility to use either our unique ALPHA Plug with line cord or the ALPHA2 with
terminal box for conduit connections

One-touch operation
Simple push button control enables the ALPHA2 to be programmed in one of 3-constant speed, 3-constant pressure, or AUTOADAPT control modes. The current operating mode is always visible on the ALPHA2's LED display

LED Display
The easy-to-read LED display indicating power (Watts) consumption and flow (GPM) estimation.

Robust startup
Enables the ALPHA2 to continuously attempt to restart – indefinitely – in blocked rotor conditions

Liquid:

Pumped liquid:	Water
Liquid temperature range:	35.6 .. 230 °F
Liquid temperature during operation:	140 °F
Density:	61.35 lb/ft³

Technical:

TF class:	110
Approvals on nameplate:	ETL, FCC, NSF

Materials:

Pump housing:	Stainless steel EN 1.4308
Impeller:	Composite

Installation:

Range of ambient temperature:	32 .. 104 °F
Maximum operating pressure:	145.04 psi

GRUNDFOS

Company name: Grundfos Canada
Created by: Louis Pelletier
Phone:
Email: lpelletier@grundfos.com
Date: 5/30/2018

Position	Count	Description

TAG: P-3.3
PLUMBING PUMP

Type of connection:	GF
Pipe connection:	1 1/2
Pressure stage:	PN 10
Port-to-port length:	6 1/2 in

Electrical data:

Power input - P1:	5 .. 45 W
Main frequency:	60 Hz
Rated voltage:	1 x 115 V
Maximum current consumption:	0.1 .. 0.65 A
Enclosure class (IEC 34-5):	IP42
Insulation class (IEC 85):	F

Others:

Net weight:	5.6 lb
Gross weight:	6.28 lb
Shipping volume:	252 ft³
Country of origin:	US
Custom tariff no.:	8413.70.10.90

Company name: Grundfos Canada
Created by: Louis Pelletier
Phone:
Email: lpelletier@grundfos.com
Date: 5/30/2018

99163937 ALPHA2 15-55SF 60 Hz

TAG: P-3.3

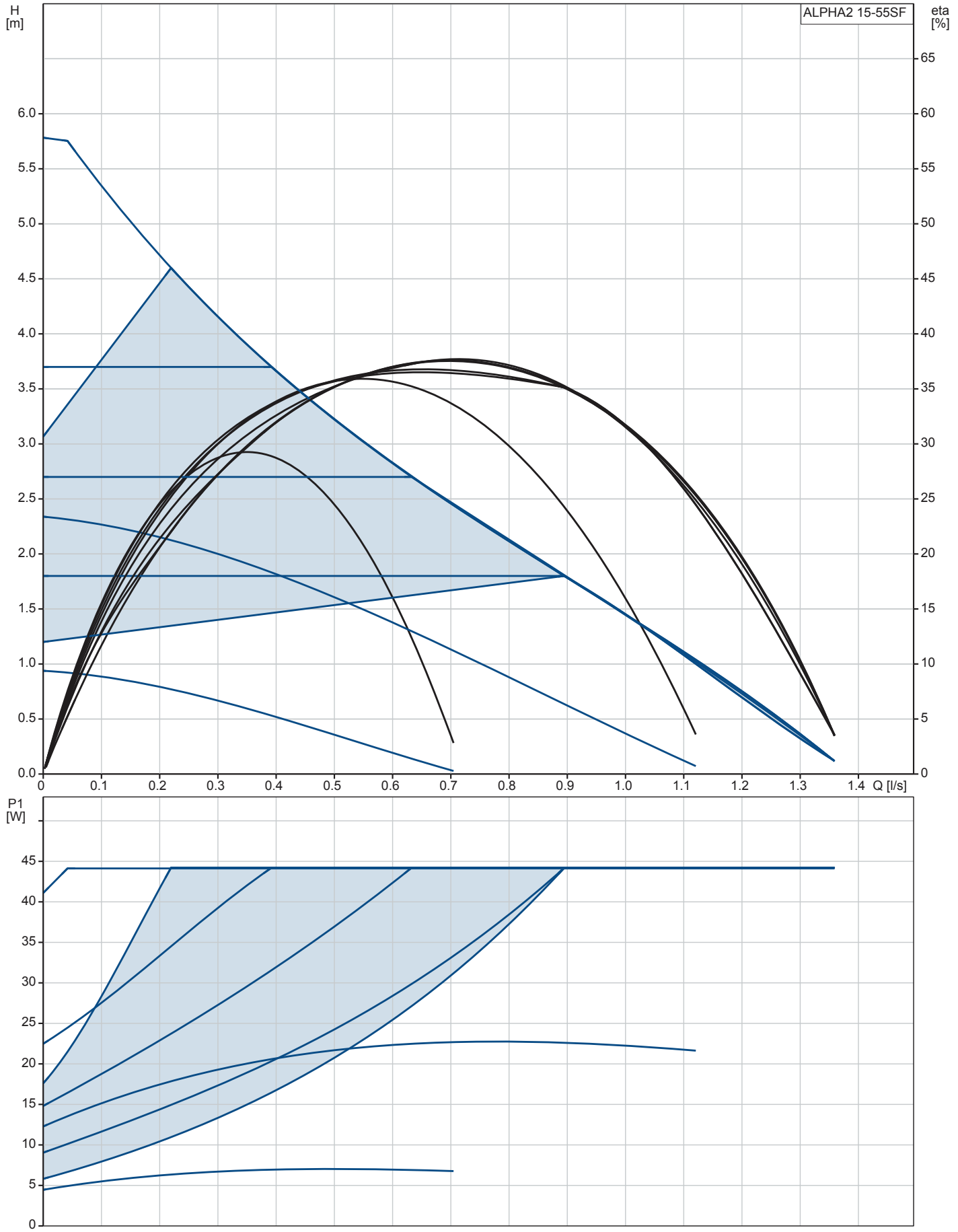

Company name: Grundfos Canada
Created by: Louis Pelletier
Phone:
Email: lpelletier@grundfos.com
Date: 5/30/2018

99163937 ALPHA2 15-55SF 60 Hz

TAG: P-3.3
PLUMBING PUMP

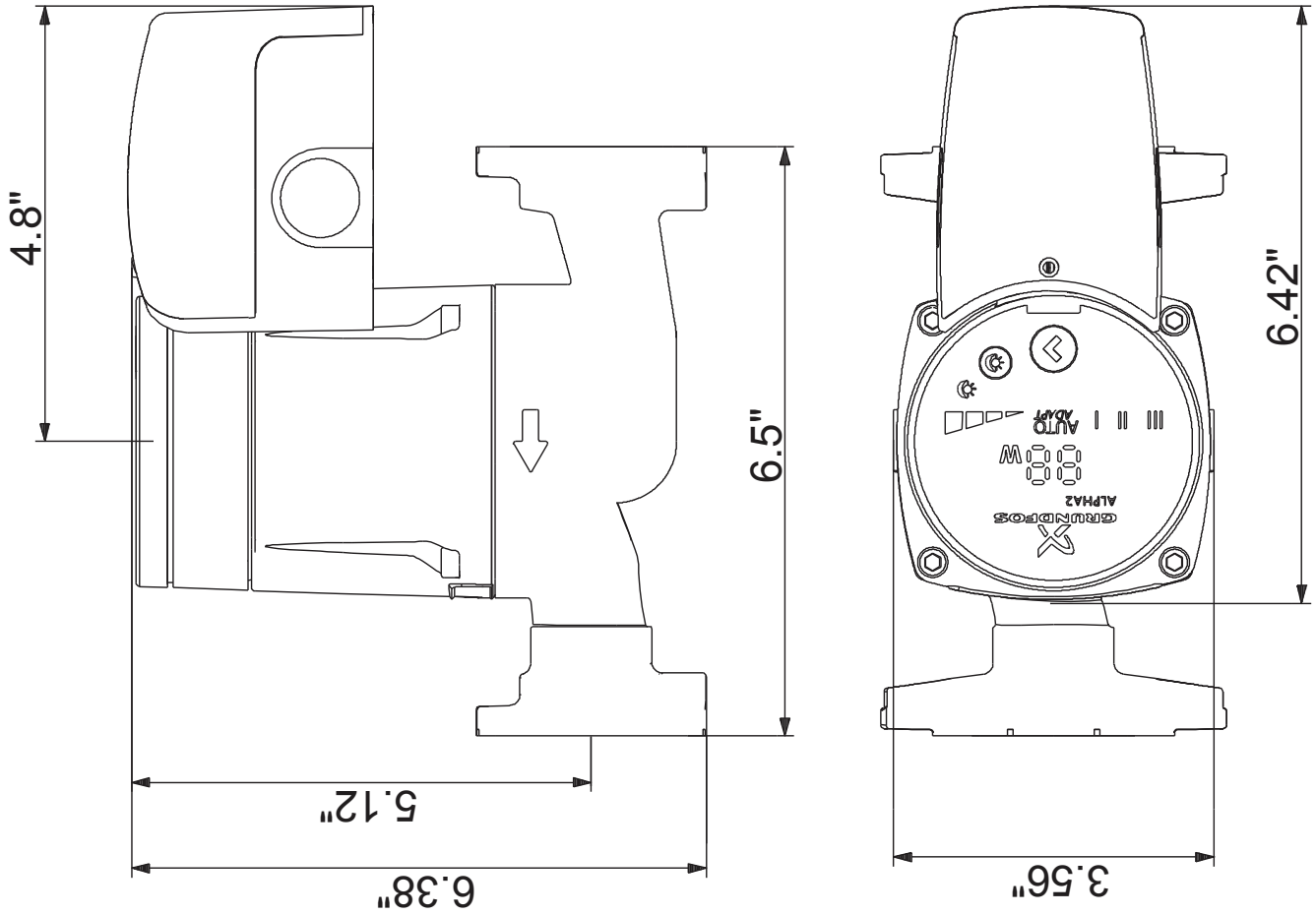

Note! All units are in [mm] unless otherwise stated.
Disclaimer: This simplified dimensional drawing does not show all details.

GRUNDFOS

Company name: Grundfos Canada
Created by: Louis Pelletier
Phone:
Email: lpelletier@grundfos.com
Date: 5/30/2018

Position	Count	Description
	1	**UPS 40-40 F B**

TAG: P-3.4 & P-3.5
SPEC 22 10 10 2.2
PUMP SCHEDULE M802



Product photo could vary from the actual product

Product No.: 96402753

The pump is of the canned rotor type, i.e. pump and motor form an integral unit without shaft seal and with only two gaskets for sealing.
The bearings are lubricatd by the pumped liquid.

In order to avoid problems in connection with disposal, great importance has been attached to using as few different materials as possible.

The pump is characterized by:
* 3 speed motor.
* Ceramic radial bearings.
* Carbon axial bearing.
* Stainless steel rotor can, bearing plate and rotor cladding.
* Aluminium alloy stator housing.
* Bronze pump housing.
* Stator with built-in thermal switch.

The motor is a 1-phase motor.

The pump is supplied with a standard module in the terminal box.
The standard module is to be connected to the mains supply via external contactor.

Controls:

Relay:	with relay

Liquid:

Pumped liquid:	Water
Liquid temperature range:	14 .. 248 °F
Liquid temperature during operation:	140 °F
Density:	61.35 lb/ft³

Technical:

Actual calculated flow:	1.595 l/s
Resulting head of the pump:	3.057 m
Approvals on nameplate:	CUL

Materials:

Pump housing:	Bronze DIN W.-Nr. 2.1176.01
Impeller:	Stainless steel DIN W.-Nr. 1.4301 AISI 304

Installation:

Range of ambient temperature:	32 .. 104 °F
Maximum operating pressure:	145.04 psi
Flange standard:	USA Oval
Type of connection:	F
Pipe connection:	GF 40/43

Company name: Grundfos Canada
Created by: Louis Pelletier
Phone:
Email: lpelletier@grundfos.com
Date: 5/30/2018

Position	Count	Description

TAG: P-3.4 & P-3.5

Pressure stage:	145 psi
Port-to-port length:	13 1/2 in
Electrical data:	
Power input in speed 1:	125 W
Power input in speed 2:	150 W
Max. power input:	170 W
Main frequency:	60 Hz
Rated voltage:	1 x 115 V
Current in speed 1:	1.34 A
Current in speed 2:	1.48 A
Current in speed 3:	1.6 A
Cos phi in speed 1:	0,81
Cos phi in speed 2:	0,88
Cos phi:	0,92
Capacitor size - run:	25 µF/400 V
Enclosure class (IEC 34-5):	X4D
Insulation class (IEC 85):	F
Others:	
Net weight:	43.7 lb
Gross weight:	49.8 lb
Shipping volume:	2.08 ft³

Company name: Grundfos Canada
Created by: Louis Pelletier
Phone:
Email: lpelletier@grundfos.com
Date: 5/30/2018

96402753 UPS 40-40 F B 60 Hz

TAG: P-3.4 & P-3.5

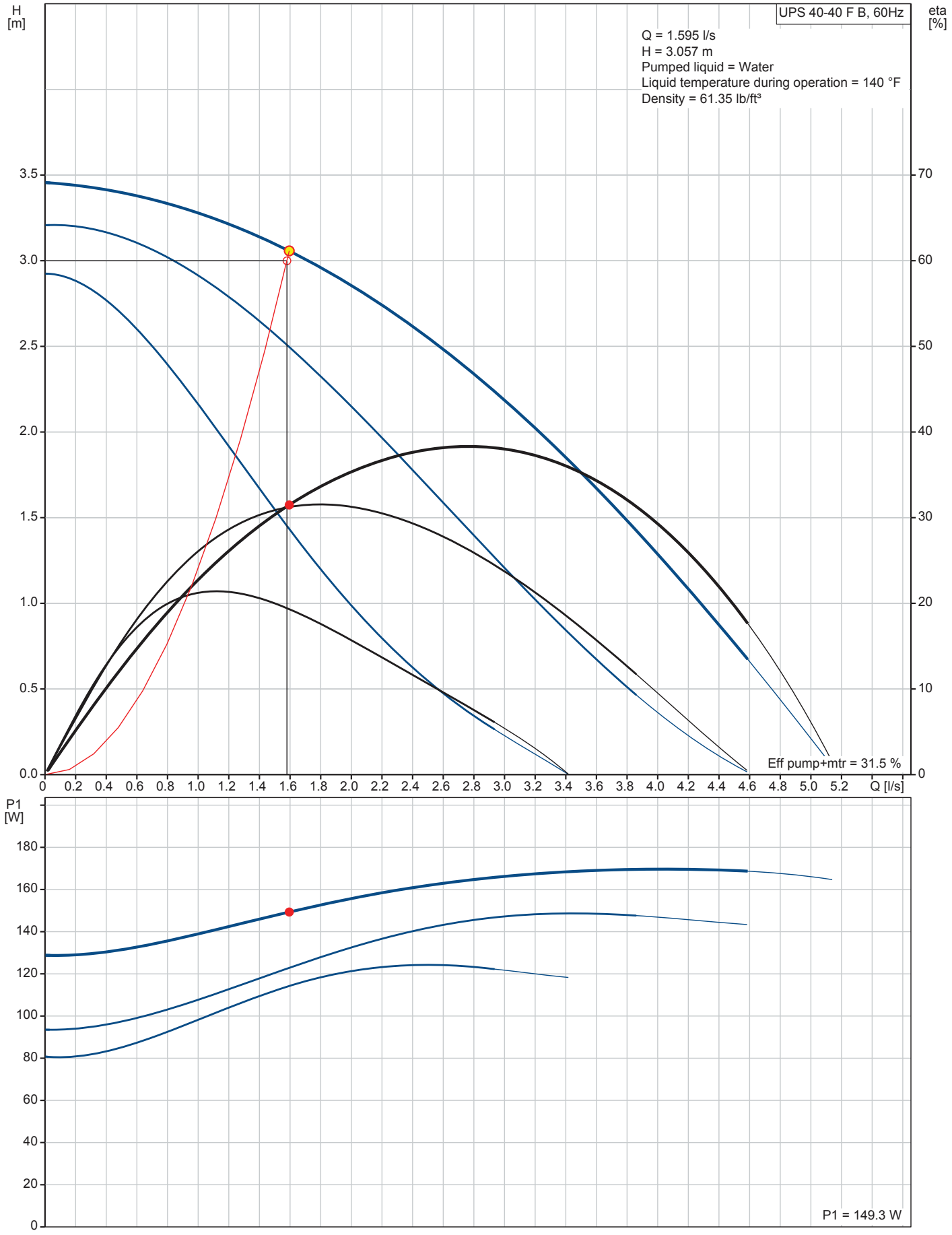

Company name: Grundfos Canada
Created by: Louis Pelletier
Phone:
Email: lpelletier@grundfos.com
Date: 5/30/2018

96402753 UPS 40-40 F B 60 Hz

TAG: P-3.4 & P-3.5

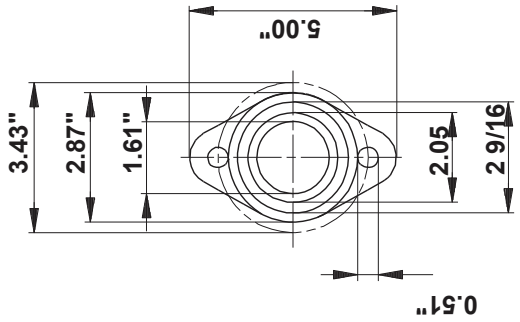

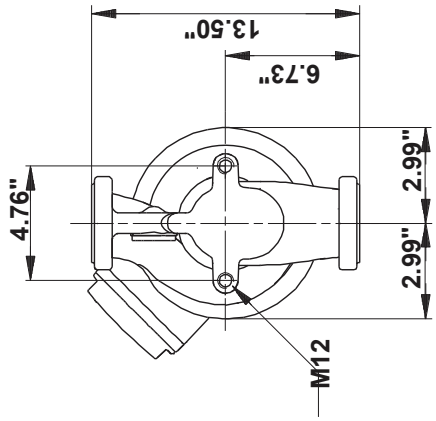

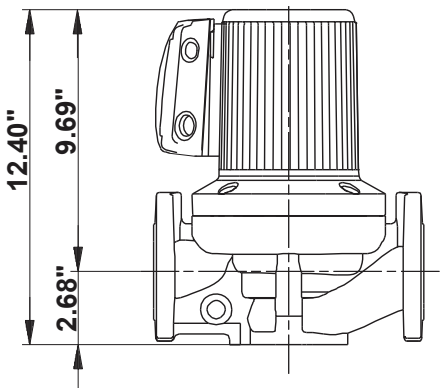

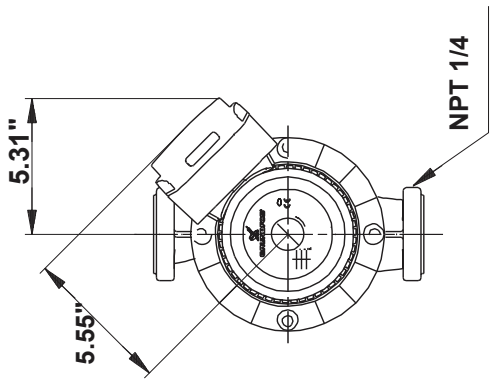

Note! All units are in [mm] unless otherwise stated.
Disclaimer: This simplified dimensional drawing does not show all details.

Mécanique Nordique
Plumbing
Heating
Ventillation
mecanique.nordique@hotmail.com
1255 Rue J.A.Bombardier Lévis QC G7A 2P4
Tél : (418) 496-1109 Fax : (418) 496-3803

REVIEWED BY CONTRACTOR
Kudlik Construction Ltd.
NAME: Sandra Rousseau P.Eng
DATE: Jul 16, 2018

IQUALUIT WWTP UPGRADES

DRAWING FOR APPROVAL

ENGINEER: **NUNAMI STANTEC LIMITED**

DRAWING #: AD-009 REV # 2

Section	:	23 11 13
Article	:	2.9 & 2.10
Plans	:	M-802 PUMP SCHEDULE
Application	:	FUEL OIL TRANSFER PUMPS
Brand	:	VIKING
Model	:	SG-40510-DUP-O , CPPPA05-100581
Revised #	:	REV # 2
Supplyer	:	WOLSELEY
Date	:	**16/07/2018**
By	:	Martin Boucher

STANTEC PROJECT #: 110126045
SUBMITTAL # AD-009 Rev2

This review by Stantec is for general conformance with the design concept of Stantec's design of the:
- ☐ Architectural
- ☐ Structural
- ☑ Mechanical
- ☐ Electrical
- ☐ Other

component(s) only and does not mean that Stantec has verified or approves the shop drawing(s). The Contractor remains solely responsible for the shop drawing(s) and this review by Stantec does not relieve the Contractor of the Contractor's responsibility for errors or omissions in the shop drawing(s) or for meeting requirements of the contract documents. This review does not mean that Stantec approves the detailed design inherent in the shop drawing, responsibility for which shall remain with the Contractor submitting same, nor does this review mean that Stantec accepts any deviation of the shop drawing(s) from the contract documents. The Contractor is responsible for confirming all dimensions and correlating them at the job site, for all construction means, methods and techniques, and for coordination of construction work of all trades, including coordination of all shop drawings.

Stantec

- ☑ REVIEWED
- ☐ REVIEWED, AS NOTED
- ☐ REVISE AND RESUBMIT
- ☐ NOT REVIEWED

DATE 2018-07-20
BY Brendan Zrum, P.Eng

TAG: P-4.1 & P-4.2
SPEC 23 11 13 2.9 & 2.10
PUMP SCHEDULE M802

Viking Pump of Canada Inc.
A Unit of IDEX Corporation
661 Grove Avenue, P.O. Box 398
Windsor, Ontario N9A 6M3

Wolseley Canada Inc.

4200 Louis B. Mayer

Laval, Québec

H7P 0G1

April 18, 2018

Our quotation # **180581**

Attention: Mario Lacasse

Project: Iqaluit Waste Treatment

Attached please find our quotation for your review.

We are confident that you will be very satisfied with the products and services that we offer.

If you have any questions, comments, or require any additional information, please do not hesitate to contact us.

Sincerely,

Jerome Bouchard

TAG: P-4.1 & P-4.2

VIKING PUMP CANADA

Viking Duplex Fuel Oil Pump Package - Quotation

Company:	Wolseley Canada Inc.	Project:	Iqaluit Waste Treatment
Address:	4200 Louis B. Mayer		
City & Province:	Laval, Québec	Quote #:	180581
Postal Code:	H7P 0G1	Date:	April 18, 2018
Contact:	Mario Lacasse	**FCA:**	Viking Pump, Windsor, Ontario
Phone:	(450) 663-5331	**Terms:**	1%10 days, net 30 days O.A.C.
Email address:	mario.lacasse@wolseleyinc.ca	**Delivery:**	4 - 6 weeks after receipt of approved drawings
		Validation:	Quote is valid for 60 days

Required Conditions	Capacity			Pressure			Liquid	Viscosity	Temperature	
	3.4	12.8	0.21	50.0	100.00	690.0	No. 2 Fuel Oil	38	76	24
	USGPM	L/min	L/sec	PSIG	Bar	kPa	SG 0.85	SSU	°F	°C

We are pleased to offer the following:

Viking Duplex Fuel Oil Pump Package:

Quantity: **1**

Consisting of:

→ **Quantity:** **1** Viking DFO part number: SG-40510-DUP-O

Quantity : **2** Motors Part Number: 350E.50-60-115TC

0.5 hp 1 ph 60 Hz 115 Volt 1750 rpm 56C Frame size

• Motors shall be Totally Enclosed Fan Cooled, C-Faced, NEMA Frame, CSA, Fractional Motor,

Control Panel for Viking Duplex Fuel Oil Pump Package

Quantity **1**

→ Viking Control Panel part number: CPPA05-180581

Best Regards,

Jerome Bouchard
Applications Engineering
519-259-4259

TAG: P-4.1 & P-4.2

VIKING PUMP CANADA

Specifications
Viking Duplex Fuel Oil Pump Package

The Duplex Fuel Oil Pump Set shall be Viking # **SG-40510-DUP-O** complete with the following equipment.

• (2) SG-40510 Spur Gear Pump in cast iron construction, heat treated steel gears, case-hardened shafts, carbon graphite bushings, mechanical seal, plain head and 1/2" NPT ports.

• (2) M-drive adaptor to mount the pump on the motor

Pump 1 P/N: Pump 2 P/N: Bracket P/N:

The pumps shall deliver:

Capacity	*Liquid*	*Differential Pressure*	*Viscosity/Sp. Gr.*
3.4 USGPM	No. 2 Fuel Oil	100.0 PSIG	38 SSU
12.8 L/min		6.90 Bar	3 cPs
0.21 L/sec		690.0 kPa	0.85 Sp. Gravity

• Motors shall be Totally Enclosed Fan Cooled, C-Faced, NEMA Frame, CSA, fractional motor

0.5 hp 1 ph 60 Hz 115 Volt 1750 rpm 56C Frame

Motor P/N: **350E0.50-60-115TC**

• **Common Base** shall be made of heavy gauge steel plate with 1 1/4" high drip-lip and 1/2" NPT drain.

• **Suction Line Equipment** shall consist of the following components in 1" Header Size

- (2) Lid-Ease Basket Strainers with 40 mesh
- (2) Ball valve, 1" NPT, 600 PSI pressure rated, full port, two piece brass body, PTFE seat, UL-Listed
- (2) 30"Hg-0-30 PSI, Compound gauges, 2.5" face, brass internals, liquid filled
- (2) Gage Valve - Ball valves, 1/4" NPT, 600 PSI, full port, two piece brass body, PTFE seat, UL-Listed
- Schedule 80 carbon steel piping and nipples, malleable iron screwed fittings; Class 125/150 Flanges where applicable. North American fittings standard

• **Discharge Line Equipment** shall consist of the following components in 1/2" Header Size

- (3) Spring Check Valve, 1/2" NPT, 400 PSI pressure rated, bronze body, PTFE poppet
- (2) Ball valve, 1/2" NPT, 600 PSI pressure rated, full port, two piece brass body, PTFE seat, UL-Listed
- (2) In-Line Relief Valve - continuous bypass type, cast iron body, stainless steel spring
- (2) Pressure Gauge, 2.5" dial, brass internals, liquid filled, 0-160 Range
- (2) Gage Valve - Ball valves, 1/4" NPT, 600 PSI, full port, two piece brass body, PTFE seat, UL-Listed
- Schedule 80 carbon steel piping and nipples, malleable iron screwed fittings; Class 125/150 Flanges where applicable. North American fittings standard
- Pump Set to be leak tested with 100 PSI air and soapy water.
- Unit to be coated with Vinyl Toluene Alkyd, Quick Dry Enamel
- Magnetic Float Switch with Alarm for Drip Tray Leak Detection
- Pressure Switch - Dual Stage - High and Low, EEMAC1 enclosure

©2012 Viking Pump, Inc., All rights reserved

VIKING PUMP CANADA

Specifications
Control Panel for Viking Duplex Fuel Oil Pump Package

The Control Panel for the Viking Duplex Fuel Oil Pump Set shall be Viking part number: **CPPA05-180581**

Duplex Control Panel 0.5 HP, 1/60/115V:

- NEMA 4 enclosure
- Individual disconnect switches, motor protectors and transformer c/w through the door operation and control circuit fuse (1 phase - 115 Volt)
- Magnetic motor starters (2)
- Hand-Off-Auto selector switches (2)
- Power on pilot light (white) (1)
- Run pilot lights (green) (2)
- Terminal Strip
- Provision to connect 9 float switches
- Control circuit fuse
- P1 - Auto - P2 alternating selector switch
- Redundant Contactors (Back-up to Primary Contactors)
- Lead pump failure pilot light & manual reset, lag pump start (automatic transfer to non operating pump in case of motor overload or short circuit)
- High pressure cut out - red pilot light & manual reset
- Low pressure cut out - red pilot light & override timers (2) (manual reset)
- High pressure alarm signal
- Low pressure alarm signal
- Low level alarm signal & red pilot light (Fuel Oil Day Tank TK-4.2)
- High level alarm signal & red pilot light (Fuel Oil Day Tank TK-4.2)
- Low level alarm signal & red pilot light (Fuel Oil Day Tank TK-4.3)
- High level alarm signal & red pilot light (Fuel Oil Day Tank TK-4.3)
- Low level alarm signal & red pilot light (Main Fuel Oil Tank TK-4.1)
- Provision to connect N/C solenoid valve (TK4.2CV)
- Provision to connect N/C solenoid valve (TK4.3CV)
- Drip tray leak detection alarm signal & red pilot light (Duplex System)
- Drip tray leak detection alarm signal & red pilot light (Fuel Oil Day Tank TK-4.2)
- Drip tray leak detection alarm signal & red pilot light (Fuel Oil Day Tank TK-4.3)

Important Notes: When quoting an electrical control panel for the DFO set, please check any Federal, State, or Local requirements under the electrical code. Consult our Applications Engineering Department at 1-888-VIK-PUMP for options not listed above

Disclaimer: Any on-site modification needed to meet Federal, State, or Local electrical codes not specified on the order will be the responsibility of the Distributor or End-User and not Viking Pump, Inc. or Viking Pump of Canada Inc.

©2012 Viking Pump, Inc., All rights reserved

TAG: P-4.1 & P-4.2

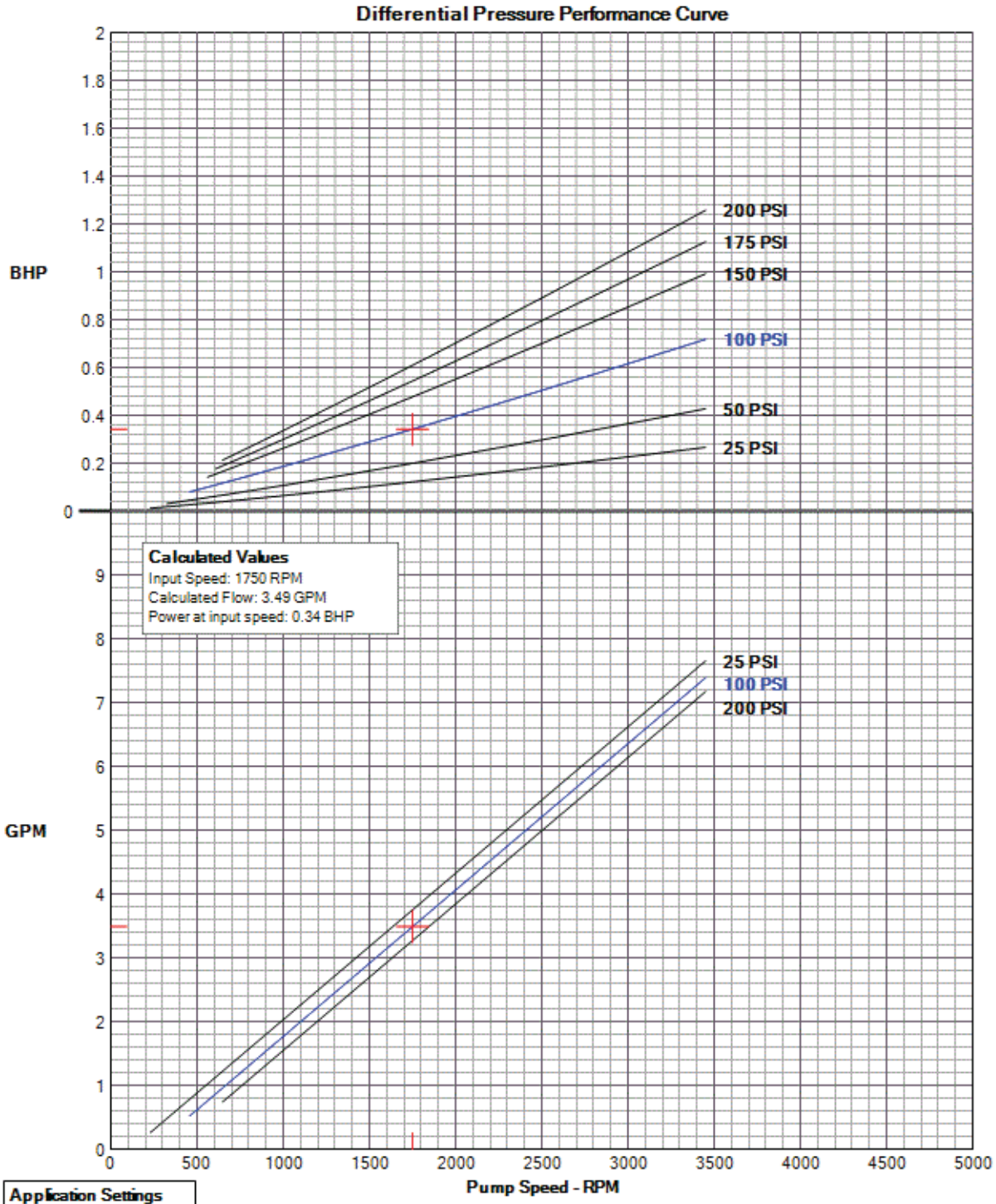

Application Settings
Model: SG-40510
Viscosity: 38 SSU
Diff. Pressure: 100 PSI
Temperature: 76 F
Specific Gravity: 0.85

Viking Pump, A Unit of IDEX Corporation, 406 State Street, Cedar Falls, Iowa, USA, 50613,

DIMENSIONAL DRAWING SG-40510-DUP-O DUPLEX UNIT

NOTES
1) PIPES AND NIPPLES ARE CARBON STEEL SCH.80
2) ALL MALLEABLE IRON FITTINGS AND STEEL PIPING ARE MANUFACTURED IN USA/CANADA
3) PUMP SET IS LEAK TESTED WITH 100 PSI AIR AND SOAPY WATER

A	1.0" NPT COMMON SUCTION
B	.50" NPT COMMON DISCHARGE
C	.50" NPT DRAIN CONNECTION
D	9/16" DIA. 4-HOLES

0.5 hp | 1 ph 60 Hz 115 Volt | 1750 rpm | 56C Frame size

• Motors shall be Totally Enclosed Fan Cooled, C-Faced, NEMA Frame, CSA, Fractional Motor

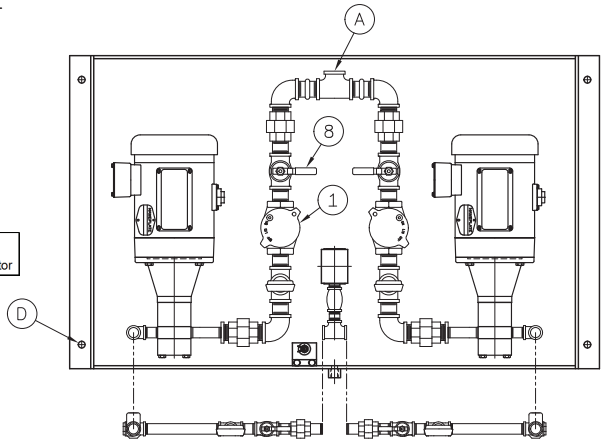

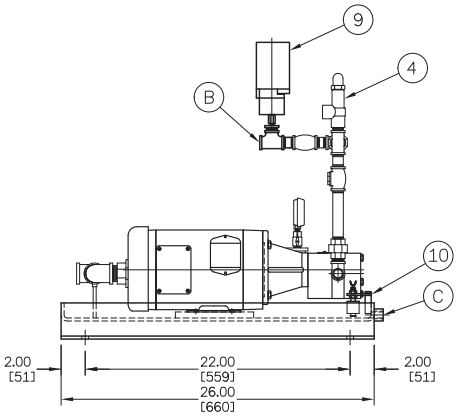

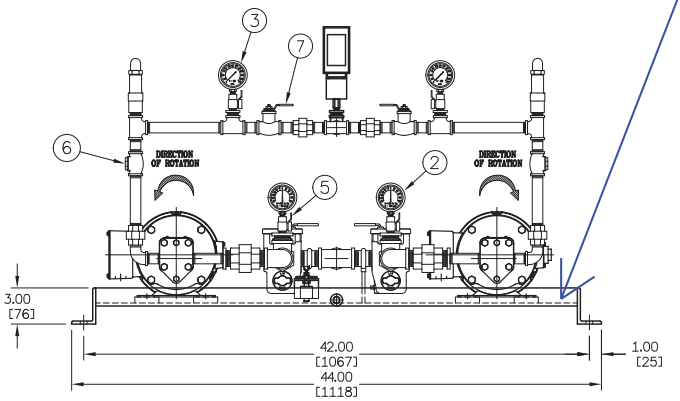

TAG: P-4.1 & P-4.2
SPEC 23 11 13 2.9 & 2.10
PUMP SCHEDULE M802

DRIP LIP IS 1-1/2IN LESS 1/4IN THICKNESS = 1-1/4

REVISION TABLE

REV	DESCRIPTION	DATE	BY
-	-	-	-
-	-	-	-
-	-	-	-

ITEM	BILL OF MATERIAL	EST. WEIGHT=
10	MAGNETIC FLOAT SWITCH	
9	PRESSURE SWITCH - DUAL STAGE 3-100 PSI	
8	1.0" NPT BALL VALVE	
7	.50" NPT BALL VALVE	
6	.50" NPT CHECK VALVE	
5	.25" NPT BALL VALVE	
4	FULFLO R.V. .50" NPT c/w GREEN-WS SPRING 30 - 100 PSI	
3	PRESSURE GUAGE 0-100 PSI LIQUID FILLED 2.5" FACE X .25" NPT	
2	COMPOUND GUAGE 30"-0-30 PSI LIQUID FILLED 2.5" FACE X .25" NPT	
1	F-1010 1.0" NPT LID EASE SIMPLEX BASKET STRAINER c/w 40 MESH S.S. BASKET	

THIRD ANGLE PROJECTION

Required Conditions	Capacity			Pressure			Liquid	Viscosity	Temperature	
	3.4	12.8	0.21	50.0	100.00	690.0	No. 2 Fuel Oil	38	76	24
	USGPM	L/min	L/sec	PSIG	Bar	kPa	SG 0.85	SSU	°F	°C

THIS DRAWING IS THE PROPERTY OF VIKING PUMP, INC. AND IS PROPRIETARY IN GENERAL AND DETAIL. IT SHALL NOT BE COPIED OR ITS CONTENTS REVEALED TO OUTSIDE PARTIES WITHOUT THE WRITTEN CONSENT OF VIKING PUMP, INC.

DIMENSIONAL DRAWING FOR VIKING DUPLEX FUEL OIL PACKAGE MODEL SG-40510-DUP-O WITH SG-40510 PUMPS AND M DRIVE BRACKETS TO SUIT 56C FRAME MOTORS.

VIKING PUMP
VIKING PUMP OF CANADA INC.
A Unit of IDEX Corporation
Windsor, Ontario N9A 6M3
CANADA

DATE: JAN 04/2018 | REV A.0

DRAWING NUMBER 800-SG-40510-DUPLEX-O-APP

TAG: P-4.1 & P-4.2
SPEC 23 11 13 2.9 & 2.10
PUMP SCHEDULE M802

120VAC/60Hz/1PH

ENCLOSURE TYPE: NEMA 4/12

(DEPTH OF PILOT AND OPERATOR DEVICES IN ADDITION TO LISTED DIMENSION)

CERTIFICAITON REQUIRED:
☐ESA
☒CSA
☐UL508A

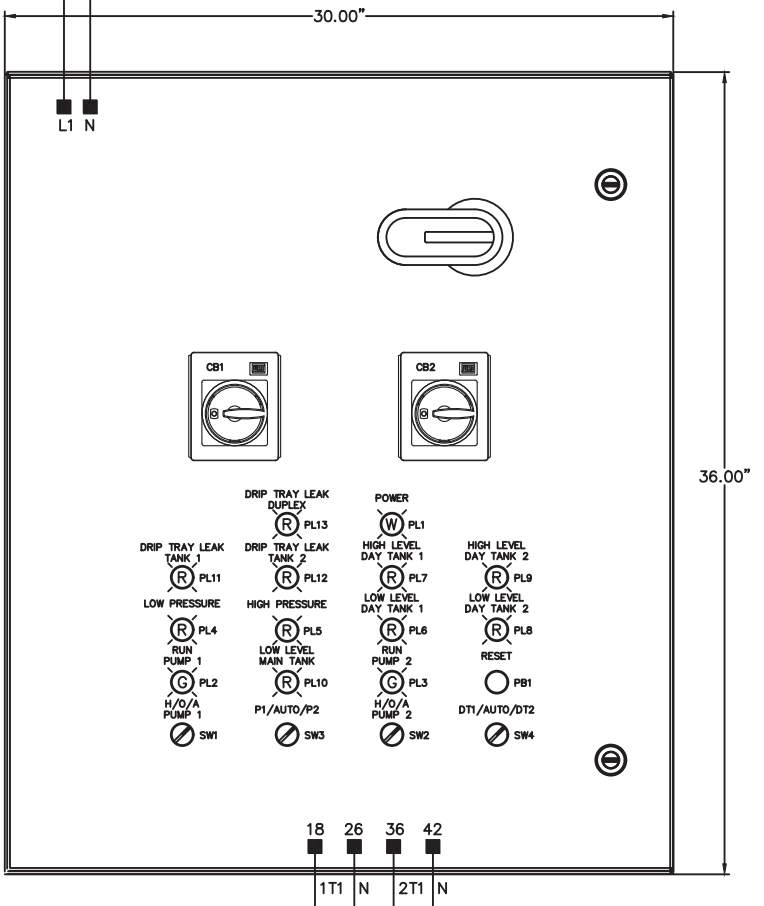

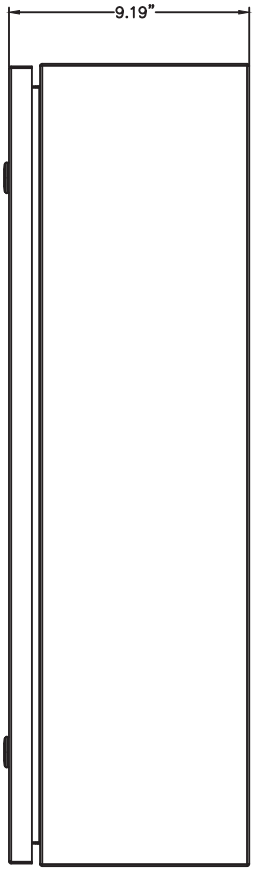

TERMINAL STRIP

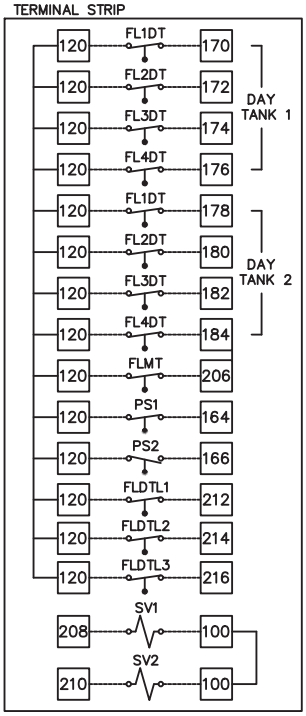

JMP MOTOR1: 120VAC LINE
JMP MOTOR1: 120VAC NEUTRAL
JMP MOTOR2: 120VAC LINE
JMP MOTOR2: 120VAC NEUTRAL

FLOAT POSITIONS: DAY TANK 2

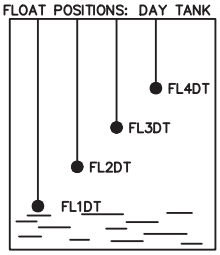

FLOAT POSITIONS: DAY TANK 1

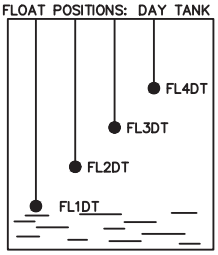

DEVICE AND OPERATION COMMENTS

P1–AUTO–P2: THE LEAD PUMP WILL ALTERNATE AFTER ALL THE PUMPS HAVE STOPPED UNDER NORMAL CONDITIONS IF SELECTOR SWITCH IS PLACED IN AUTO. IF LEAD PUMP FAILS, LAG PUMP WILL START

DT1–AUTO–DT2: DT1 AND DT2 FILL RESPECTIVE DAY TANKS ONLY. AUTO FILLS BOTH TANKS AS REQUIRED.

FL1DT: LOW LEVEL DAY TANK – STARTS LAG PUMP WHEN FLOAT SWITCH CLOSES. ACTIVATES VISUAL ALARM AND ALARM RELAY. ALARM MUST BE MANUALLY RESET

FL2DT: START LEAD PUMP – STARTS LEAD PUMP WHEN FLOAT SWITCH CLOSES. ACTIVATES VISUAL SIGNAL.

FL3DT: STOP ALL PUMPS – STOPS ALL PUMPS IN AUTOMATIC MODE WHEN FLOAT SWITCH OPENS.

FL4DT: HIGH LEVEL DAY TANK – STOPS ALL PUMPS WHEN FLOAT SWITCH OPENS. ACTIVATES VISUAL ALARM AND ALARY RELAY. ALARM AUTOMATICALLY RESETS..

PS1: LOW PRESSURE – STOPS ALL PUMPS IN AUTO MODE WHEN PRESSURE SWITCH CLOSES AFTER 1 MINUTE OF RUN TIME. ACTIVATES VISUAL ALARM AND ALARM RELAY. ALARM MUST BE MANUALLY RESET.

PS2: HIGH PRESSURE – STOPS ALL PUMPS WHEN SWITCH CLOSES. ACTIVATES VISUAL ALARM AND ALARM RELAY. ALARM MUST BE MANUALLY RESET.

SV1: SOLENOID VALVE – ENERGIZED WHEN FILLING DAY TANK 1

SV2: SOLENOID VALVE – ENERGIZED WHEN FILLING DAY TANK 2

FLMT: LOW LEVEL MAIN TANK – ACTIVATES VISUAL ALARM AND ALARM RELAY. ALARM MUST BE MANUALLY RESET

FLDTL1: DRIP TRAY LEAK DUPLEX – ACTIVATES VISUAL ALARM AND ALARM RELAY. ALARM AUTOMATICALLY RESETS.

FLDTL2: DRIP TRAY LEAK MAIN TANK 1 – ACTIVATES VISUAL ALARM AND ALARM RELAY. ALARM AUTOMATICALLY RESETS.

FLDTL3: DRIP TRAY LEAK MAIN TANK 2 – ACTIVATES VISUAL ALARM AND ALARM RELAY. ALARM AUTOMATICALLY RESETS.

ALARM RELAYS

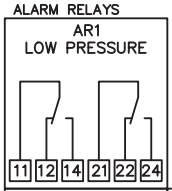

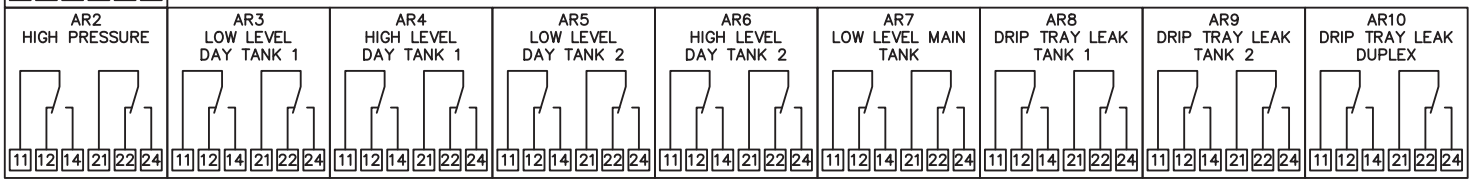

Itemref	Quantity	Customer		Article No./Reference		V.J. PAMENSKY CANADA INC.	CPPA05–180581		
N/A	1	VIKING PUMP OF CANADA		P.O.#		64 SAMOR ROAD TORONTO ON. M6A 1J6 1–877–PAMENSKY (726–3675)	MECH1	Revision 1	Sheet 1/4
Designed by	Revised by	Approval Date	File	Date	Scale				
DT	–	XXX XX, 2017	1MVIKI	JUL 03, 2018	N/A				

TAG: P-4.1 & P-4.2
SPEC 23 11 13 2.9 & 2.10
PUMP SCHEDULE M802

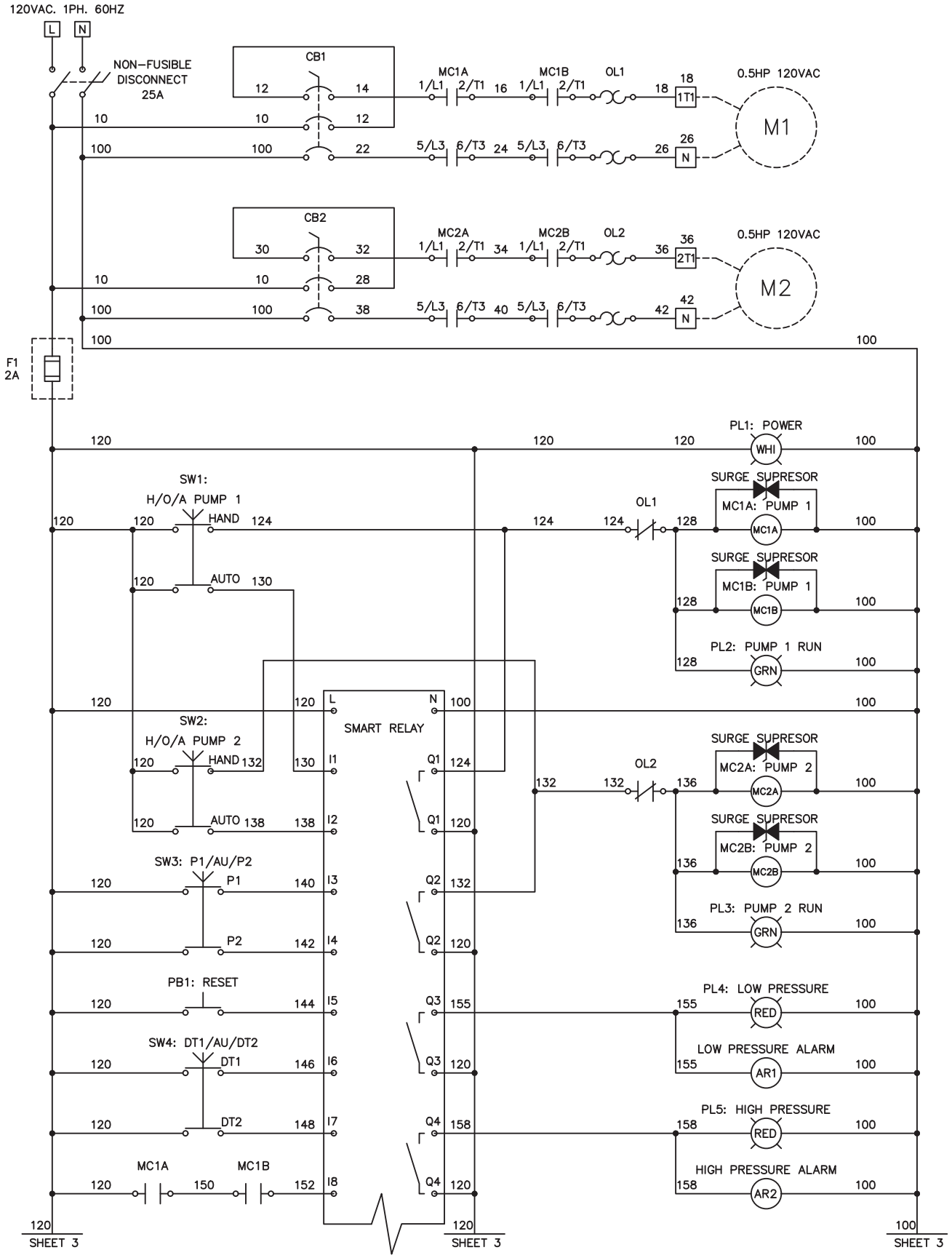

Itemref	Quantity	Customer		Article No./Reference		V.J. PAMENSKY CANADA INC.	CPPA05–180581		
N/A	1	VIKING PUMP OF CANADA		P.O.#		64 SAMOR ROAD TORONTO ON. M6A 1J6			
Designed by	Revised by	Approval Date	File	Date	Scale	1–877–PAMENSKY (726–3675)	ELEC1	Revision	Sheet
DT	–	XXX XX, 2017	1MVIKI	JUL 03, 2018	N/A			1	2/4

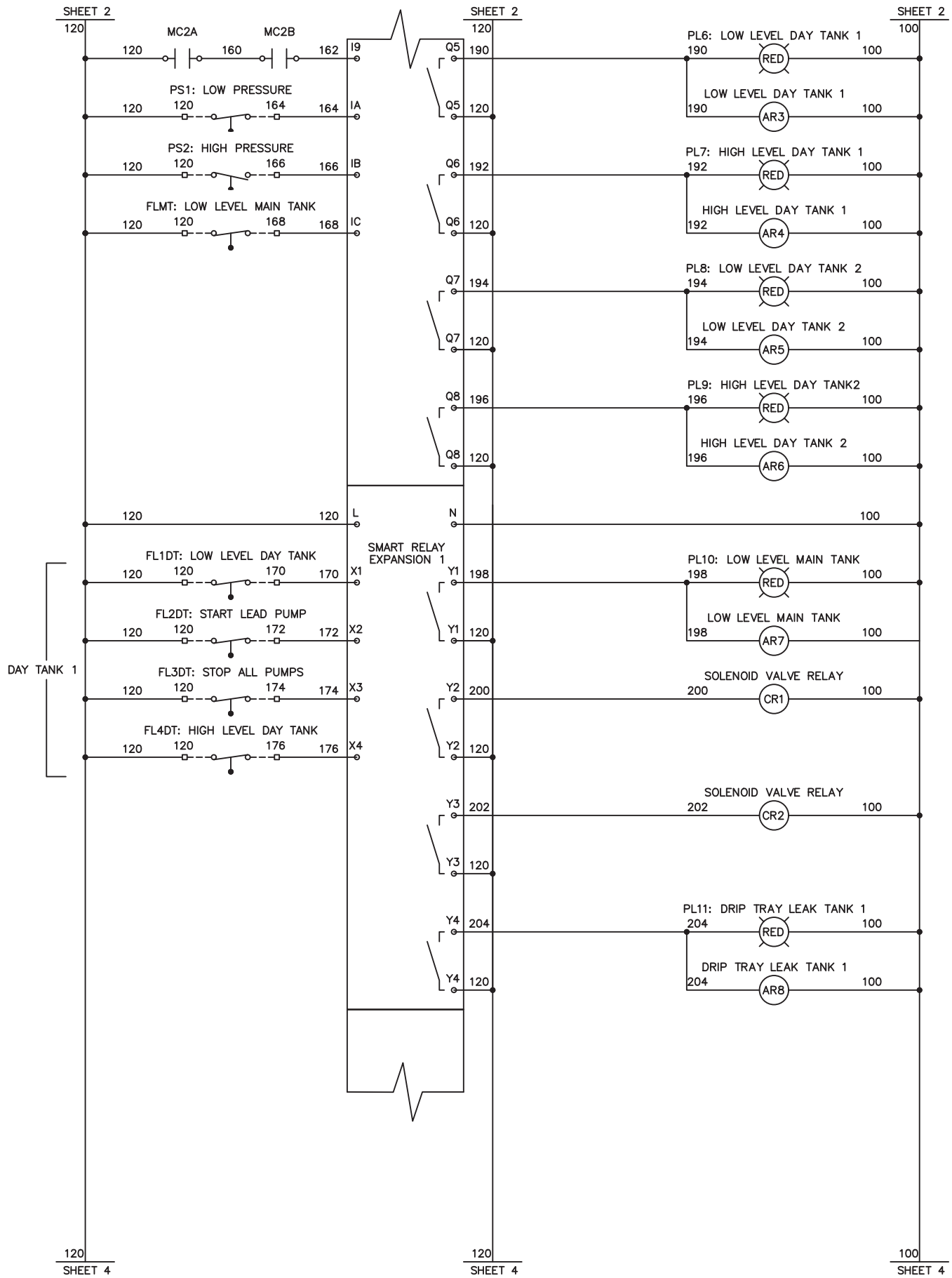

Itemref	Quantity	Customer		Article No./Reference		V.J. PAMENSKY CANADA INC.	CPPA05–180581		
N/A	1	VIKING PUMP OF CANADA		P.O.#		64 SAMOR ROAD TORONTO ON. M6A 1J6 1–877–PAMENSKY (726–3675)			
Designed by	Revised by	Approved by – date	File	Date	Scale		ELEC2	Revision	Sheet
DT	–	XXX XX, 2017	1MVIKI	JUL 03, 2018	N/A			1	3/4

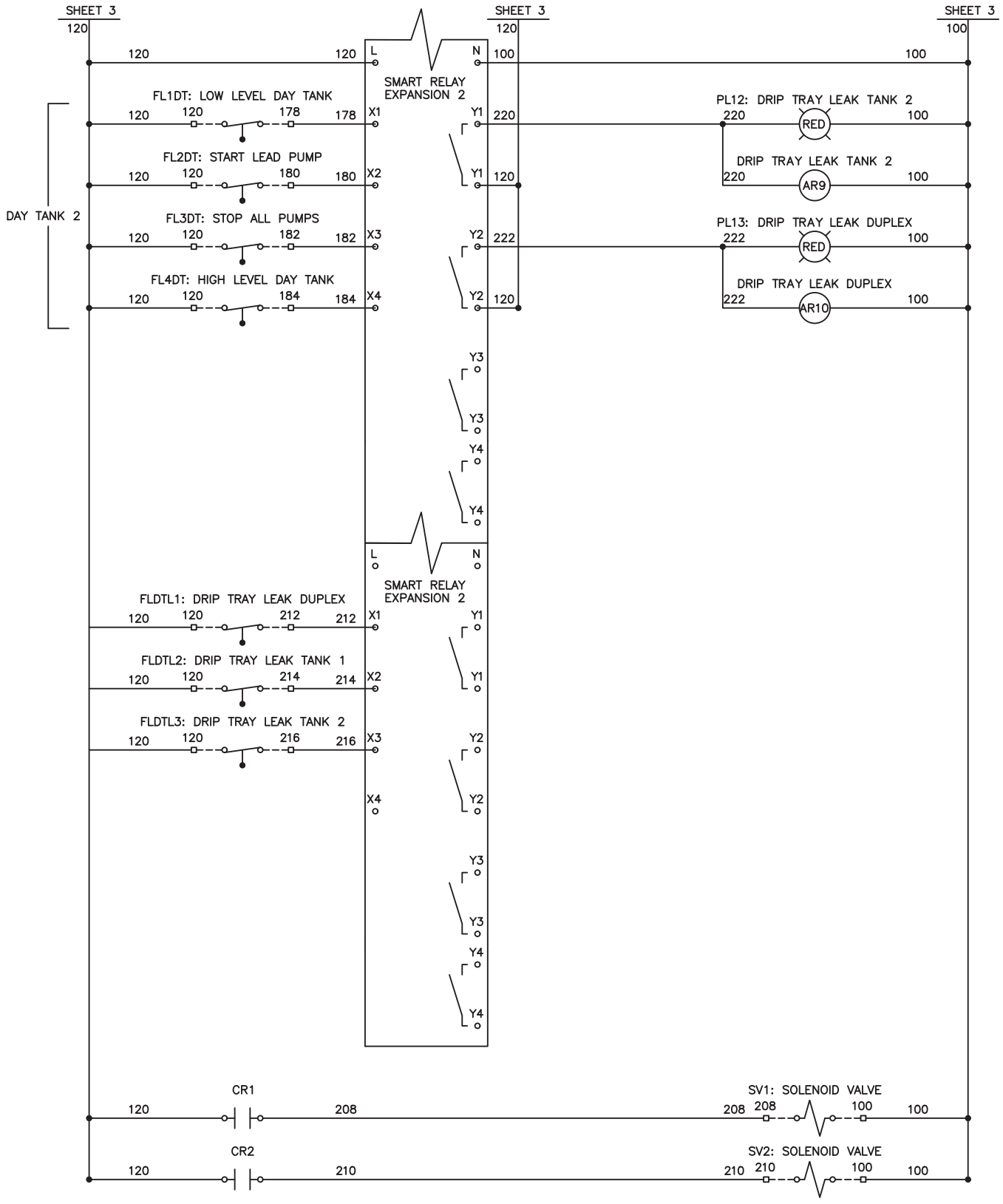

Itemref	Quantity	Customer			Article No./Reference		V.J. PAMENSKY CANADA INC.	CPPA05–180581		
N/A	1	VIKING PUMP OF CANADA			P.O.#		64 SAMOR ROAD TORONTO ON. M6A 1J6 1–877–PAMENSKY (726–3675)	ELEC3	Revision 1	Sheet 4/4
Designed by	Checked by	Approved by – date	File		Date	Scale				
DT	–	XXX XX, XXXX	1MVIKI		JUL 03, 2018	N/A				

Mécanique Nordique
Plumbing
Heating
Ventillation
mecanique.nordique@hotmail.com
1255 Rue J.A.Bombardier Lévis QC G7A 2P4
Tél : (418) 496-1109 Fax : (418) 496-3803

REVIEWED BY CONTRACTOR
Kudlik Construction Ltd.
NAME: Sandra Rousseau P.Eng
DATE: Jun 04, 2018

IQUALUIT WWTP UPGRADES

DRAWING FOR APPROVAL

ENGINEER: **NUNAMI STANTEC LIMITED**

DRAWING #: AD-010

Section	: 22 30 05
Article	: 2.1 & 2.2
Plans	: M802 WATER HEATER SCHEDULE
Application	: OIL FIRED WATER HEATER
Brand	: A.O SMITH
Model	: COF-315
Revised #	:
Supplyer	: WOLSELEY
Date	: **01/06/2018**
By	: Martin Boucher

STANTEC PROJECT #: 110126045

This review by Stantec is for general conformance with the design concept of Stantec's design of the:

- ☐ Architectural
- ☐ Structural
- ☑ Mechanical
- ☐ Electrical
- ☐ Other

component(s) only and does not mean that Stantec has verified or approves the shop drawing(s). The Contractor remains solely responsible for the shop drawing(s) and this review by Stantec does not relieve the Contractor of the Contractor's responsibility for errors or omissions in the shop drawing(s) or for meeting all requirements of the contract documents. This review does not mean that Stantec approves the detailed design inherent in the shop drawing, responsibility for which shall remain with the Contractor submitting same, nor does this review mean that Stantec accepts any deviation of the shop drawing(s) from the contract documents. The Contractor is responsible for confirming all dimensions and correlating them at the job site, for all construction means, methods and techniques, and for coordination of construction work of all trades, including coordination of all shop drawings.

SUBMITTAL # AD-010

Stantec

- ☑ REVIEWED
- ☐ REVIEWED, AS NOTED
- ☐ REVISE AND RESUBMIT
- ☐ NOT REVIEWED

DATE 2018-06-04

BY Brendan Zrum, P.Eng

TAG: DHWT-1

Commercial Oil-Fired Water Heaters

SPEC 22 30 05 2.1 & 2.2

COMMERCIAL OIL-FIRED WATER HEATERS

FEATURES

MEETS THE THERMAL EFFICIENCY AND STANDBY LOSS REQUIREMENTS OF THE U.S. DEPARTMENT OF ENERGY AND CURRENT EDITION ASHRAE/IESNA 90.1

LIME TAMER™ MODELS INHIBIT LIME AND SEDIMENT BUILDUP—Lime Tamer™ models are warranted against tank failure due to sedimentbuildup for three years.

GLASSLINED TANK — Maximizes tank life. 160psi working pressure.

180° ADJUSTABLE THERMOSTAT— Has upper and lower sensingbulbs to average water temperatures at top and bottom of heater formaximum temperature control (120°-180°).

SAFETY SHUTOFF— Limits temperature buildup.

UL LISTED OIL BURNER— Precision engineered to match the units they are used with; designed to fire 1.75 to 5.0 gallons of oil per hour. All models equipped with single phase continuous duty motor 120 volt AC60 Hz, 3450 rpm with manual overload switch and interrupted ignition. Standard burners equipped with single stage pump with 1 or 2 line capability. Flame retention principle assures high rate of combustion efficiency, yet maintains low operating noise levels. Fuel unit includes pump, strainer, pressure regulating valve and ignition transformer. Transformer rated at 120 volt AC, 60 Hz with 10,000 volt secondary, UL listed for use with No. 1 and 2 commercial grade fuel oil. Burner mounted cadmium cell relay for flame detection - 15 second safety switch timing eliminates the need for RA890F Electronic Safeguard. Complies with UL A708.5-32/33.

EFFICIENT COMBUSTION CHAMBER— Precast, high temperature combustion chamber made of alumina silica ceramic fiber. Engineered for maximum insulation and heat reflection. Unique design assures more complete combustion by stabilizing flame pattern.

INTERRUPTED IGNITION— Reduces electrical consumption.

OIL SOLENOID SAFETY VALVE— Standard on COF-455 and 700.

3/4" DRAIN VALVE— Provided in lower tank for fast draining.

TWO HAND-HOLE CLEANOUTS—Allows easy cleaning on standard models COF-385 and larger and ASME models.

ANODIC PROTECTION—For longer tank life.

FLAME OBSERVATION PORT—Permits convenient flame check.

FOAM INSULATION—Saves fuel, helps maintain constant temperature.

JACKET—Heavy gauge steel with baked enamel finish over bonderized undercoat. Not approved for installation on combustible flooring.

EASY TO INSTALL BURNER—Three bolt mounting of burner assures easy installation.

BAROMETRIC DRAFT REGULATOR

CSA CERTIFIED AND ASME RATED T&P RELIEF VALVE

OTHER FEATURES

- Two Stage Pump - For use with underground oil storage tanks or JP-5 fuel
- ASME Construction Available - All models are rated 160 psi max working pressure
- CAUTION: Units must be installed on noncombustible surface.

THREE-YEAR LIMITED TANK WARRANTY

- Factory Start-Up included - Required for activating warranty and assuring maximum operating performance. Contact your local sales representative or Authorized Start-Up Agent to arrange a FREE Certified Start-Up.
- For complete warranty information, consult written warranty

COF-199 through COF-700



Lime Tamer™

ASME
(OPTIONAL)

Revised May 2012

AOSTO20000

TAG: DHWT-1

Commercial Oil-Fired Water Heaters

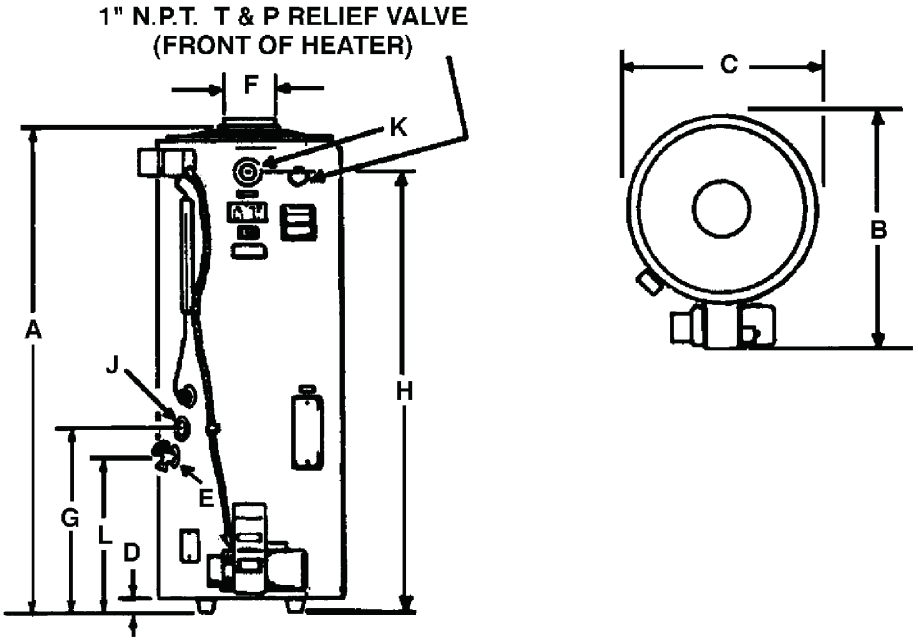

Dimensions in Inches

Models	A	B	C	D	E	F	G	H	J	K	L	Approx. Ship. Wt. (Lbs)	
												Standard	ASME
COF-199	74 1/2	36 3/4	27 3/4	2	3/4 NPT	8	26 5/8	74 1/2	1 1/2 NPT	1 1/2 NPT	22 3/4	553	-
COF-245	74 1/2	36 3/4	27 3/4	2	3/4 NPT	8	26 5/8	74 1/2	1 1/2 NPT	1 1/2 NPT	22 3/4	554	-
COF-315	74 1/2	36 3/4	27 3/4	2	3/4 NPT	8	26 5/8	74 1/2	1 1/2 NPT	1 1/2 NPT	22 3/4	554	657
COF-385	73 3/4	36 3/4	27 3/4	2	3/4 NPT	8	24 3/4	73 3/4	1 1/2 NPT	1 1/2 NPT	23 7/16	624	742
COF-455	73 3/4	36 3/4	27 3/4	2	3/4 NPT	8	24 3/4	73 3/4	1 1/2 NPT	1 1/2 NPT	23 7/16	700	747
COF-700	73 3/4	36 3/4	27 3/4	2	3/4 NPT	10	30 3/16	79 3/16	1 1/2 NPT	1 1/2 NPT	28 7/8	739	822

Specifications And Recovery Capacities

Models	Firing Rate GPH	Tank Storage (US Gal.)	Input* BTU/H	Recovery Rates at °F Rise											Motor HP
				40	50	60	70	80	90	100	110	120	130	140	
COF-199	1.42	86	199,000	477	381	318	272	238	212	191	173	159	147	136	1/8
COF-245	1.75	86	245,000	587	469	391	335	293	261	235	213	196	181	168	1/8
COF-315	2.25	84	315,000	754	604	503	431	377	335	302	274	251	232	216	1/8
COF-385	2.75	75	385,000	922	738	615	527	461	410	369	335	307	284	263	1/8
COF-455	3.25	75	455,000	1090	872	727	623	545	484	436	396	363	335	311	1/8
COF-700	5.00	69	700,000	1677	1341	1118	958	838	745	671	610	559	516	479	1/8

*Based on No. 2 fuel oil. Capacity rating are actual heater performance at 80% thermal efficiency.
NOTE: Above 2000' altitude, input ratings should be reduced 4% for each 1000' above sea level.

SUGGESTED SPECIFICATION

Water heater(s) shall be commercial oil model number _____ or equivalent. Heater(s) shall have a minimum oil firing rate of _____ gph at 100°F temperature rise and a storage capacity of _____ gallons. The 160 psi working pressure tank shall be glass-lined with the alkaline borosilicate composition being fused to the steel at 1600° and be equipped with 1 1/2" water inlet and outlet openings, and 2 3/4" x 3 3/4" boiler-type hand-hole cleanout (2) on COF-315 and larger or ASME models. The tank shall be insulated with 2" fiber glass insulation. The outer jacket shallhave baked enamel finish over a bonderized undercoating. The burner shall be Underwriters' Laboratories listed and have a _____ (one or two) stage oil pump. The burner shall have flame retention, interrupted ignition and be equipped with primary controls which will provide for 15 second safety shutdown in the event of flame failure. The heater(s) shall be factory equipped with primary controls which will provide for 15 second safety shutdown in the event of flame failure. The heater(s) shall be factory equipped with temperature limiting device, drain valve, flame observation port and 180° adjustable thermostat having upper and lower sensing bulbs which average the water temperatures at the top and bottom of the tank for maximum water temperature control. A CSA Certified and ASME Rated T&P Relief Valve shall be furnished and installed by the factory. Heater tank shall have a 3 year limited warranty against corrosion and tank failure due to sediment buildup as outlined in the warranty.

For Technical Information and Automated Fax Service, call 800-527-1953. A. O. Smith Corporation reserves the right to make product changes or improvements without prior notice.

Mécanique Nordique
Plumbing
Heating
Ventillation
mecanique.nordique@hotmail.com
1255 Rue J.A.Bombardier Lévis QC G7A 2P4
Tél : (418) 496-1109 Fax : (418) 496-3803

REVIEWED BY CONTRACTOR
Kudlik Construction Ltd.
NAME: Sandra Rousseau P.Eng
DATE: Jun 15, 2018

IQUALUIT WWTP UPGRADES

DRAWING FOR APPROVAL

ENGINEER: **NUNAMI STANTEC LIMITED**

DRAWING #: AD-011 REV # 1

Section	: 23 21 14
Article	: 2,6
Plans	: M-802 HEAT EXCHANGER SHEDULE
Application	: BRAZED PLATE HEAT EXCHANGER
Brand	: HTG , DANFOSS
Model	: B3-052-70-H & HTG032DW-30-3.0
Revised #	: # 1
Supplyer	: SPECIFIED THECHNICAL SALES LTD
Date	: **15/06/2018**
By	: Martin Boucher

STANTEC PROJECT #: 110126045

This review by Stantec is for general conformance with the design concept of Stantec's design of the:

- ☐ Architectural
- ☐ Structural
- ☑ Mechanical
- ☐ Electrical
- ☐ Other

component(s) only and does not mean that Stantec has verified or approves the shop drawing(s). The Contractor remains solely responsible for the shop drawing(s) and this review by Stantec does not relieve the Contractor of the Contractor's responsibility for errors or omissions in the shop drawing(s) or for meeting all requirements of the contract documents. This review does not mean that Stantec approves the detailed design inherent in the shop drawing, responsibility for which shall remain with the Contractor submitting same, nor does this review mean that Stantec accepts any deviation of the shop drawing(s) from the contract documents. The Contractor is responsible for confirming all dimensions and correlating them at the job site, for all construction means, methods and techniques, and for coordination of construction work of all trades, including coordination of all shop drawings.

SUBMITTAL # AD-011 Rev#1

Stantec

- ☑ REVIEWED
- ☐ REVIEWED, AS NOTED
- ☐ REVISE AND RESUBMIT
- ☐ NOT REVIEWED

DATE 2018-06-27

BY Brendan Zrum, P.Eng

TAG: HEX-3.1
HYDRONIC SPECIALTIES
SPEC 23 21 14 2.6

Universal RC - Single phase

Brazed Plate Heat Exchanger: B3-052-70-H

Customer: VIGMARK
Reference: 51.6 kW

Date: 05-07-2018
Danfoss ref:

Design conditions

Flow type			Counter current	
			side 1	**side 2**
Inlet temperature	C	:	82.20	55.00
Outlet temperature	C	:	65.60	80.00
Mass Flow rate	kg/s	:	0.874	0.493
Volumetric Flow rate	L/min	:	51.181	29.971
Max pressure drop	kPa	:	/	/

Properties of fluid

Fluid		:	Propylene glycol(50%)	Water
Reference temperature	C	:	73.90	67.50
Viscosity	mPa-s	:	0.9958	0.42
Viscosity wall	mPa-s	:	1.0613	0.405
Density	kg/m^3	:	1030.88	980.05
Heat capacity	kJ/kg-K	:	3.556	4.187
Thermal conductivity	W/m-K	:	0.420	0.657

Brazed Plate Heat Exchanger

Heat load		kW	:	51.60	
total area		m^2	:	3.47	
LMTD		K	:	5.34	
H.T.C.		W/m^2-K	:	3069/2785	
Pressure drop	- Total	kPa	:	8.04	2.53
	- Channel	kPa	:	7.61	2.38
	- In port	kPa	:	0.43	0.15
Port hole diameter		mm	:	35	35
NTU			:	3.107	4.682
Channel number			:	34H	35H
Number of plates			:	70	
Surface margin		%	:	10.2	
Fouling factor		m^2-K/kW	:	0.0332	

TAG: HEX-3.1

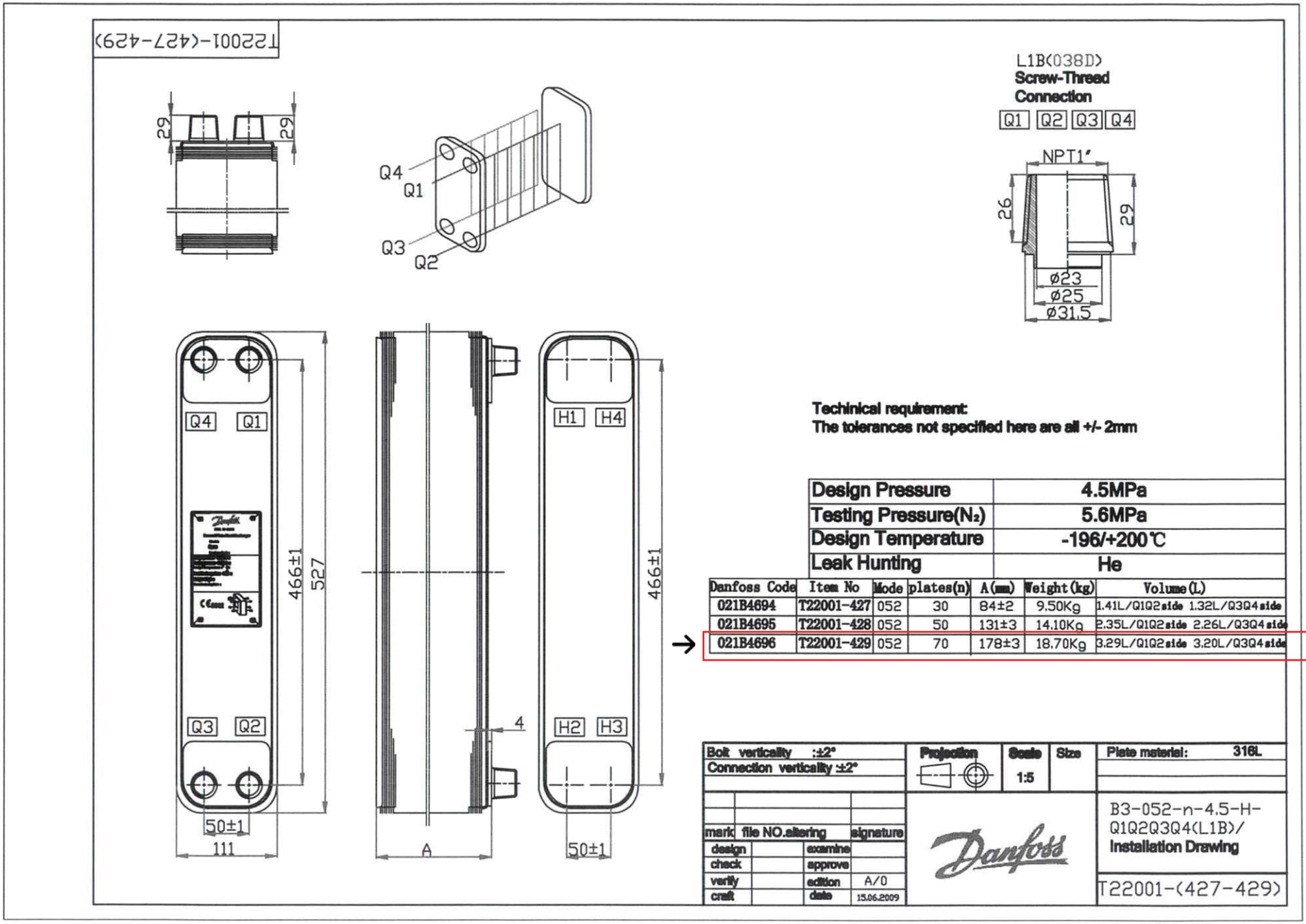

Techinical requirement:
The tolerances not specified here are all +/- 2mm

Design Pressure	4.5MPa
Testing Pressure(N_2)	5.6MPa
Design Temperature	-196/+200℃
Leak Hunting	He

Danfoss Code	Item No	Mode	plates(n)	A(mm)	Weight(kg)	Volume(L)
021B4694	T22001-427	052	30	84±2	9.50Kg	1.41L/Q1Q2side 1.32L/Q3Q4side
021B4695	T22001-428	052	50	131±3	14.10Kg	2.35L/Q1Q2side 2.26L/Q3Q4side
021B4696	T22001-429	052	70	178±3	18.70Kg	3.29L/Q1Q2side 3.20L/Q3Q4side

Bolt verticality :±2°				Projection	Scale	Size
Connection verticality ±2°					1:5	
mark	file NO.	altering	signature			
design		examine				
check		approve				
verify		edition	A/0			
craft		date	15.06.2009			

Plate material: 316L

B3-052-n-4.5-H-Q1Q2Q3Q4(L1B)/
Installation Drawing

T22001-(427-429)

HYDRONIC SPECIATIES
SPEC 23 21 14 2.6

DRAWING REVISION

HTG
Heat Transfer Group, Inc.

TAG: HEX-3.2

Brazed Plate Heat Exchanger: HTG095DW-30

Customer: VIGMARK
Reference: 43.5 kW

Date: 05-07-2018
HTG ref:

Design Conditions

Flow type				Counter current	
			side 1		**side 2**
Inlet temperature	C	:	82.20		2.80
Outlet temperature	C	:	65.60		9.40
Volumetric Flow rate	l/s	:	0.72		1.57
Max pressure drop	kPa	:	/		/

Fluid Properties

Fluid		:	50% P.G	Water
Reference temperature	C	:	73.90	6.10
Viscosity	cP	:	0.9958	1.4701
Viscosity wall	cP	:	2.6801	0.8858
Density	kg/m^3	:	1030.88	1000.52
Heat capacity	kJ/kg-K	:	3.556	4.197
Thermal conductivity	W/m-K	:	0.420	0.568

Heat Exchanger

Heat load		kW	:	43.50	
total area		m^2	:	2.66	
LMTD		K	:	67.68	
H.T.C.		W/m^2-K	:	2113/242	
Pressure drop	- Total	kPa	:	4.79	19.07
	- Channel	kPa	:	4.74	18.81
	- In port	kPa	:	0.05	0.26
Port hole diameter		mm	:	54	54
NTU			:	0.245	0.098
Channel number			:	14H	15H
Number of plates			:	30	
Surface margin		%	:	773	
Fouling factor		m^2-K/kW	:	3.659	

***Note DW = double wall plates ***

Interstitial Vent to see leak (standard)
Fluid cannot be mixed

TAG: HEX-3.2

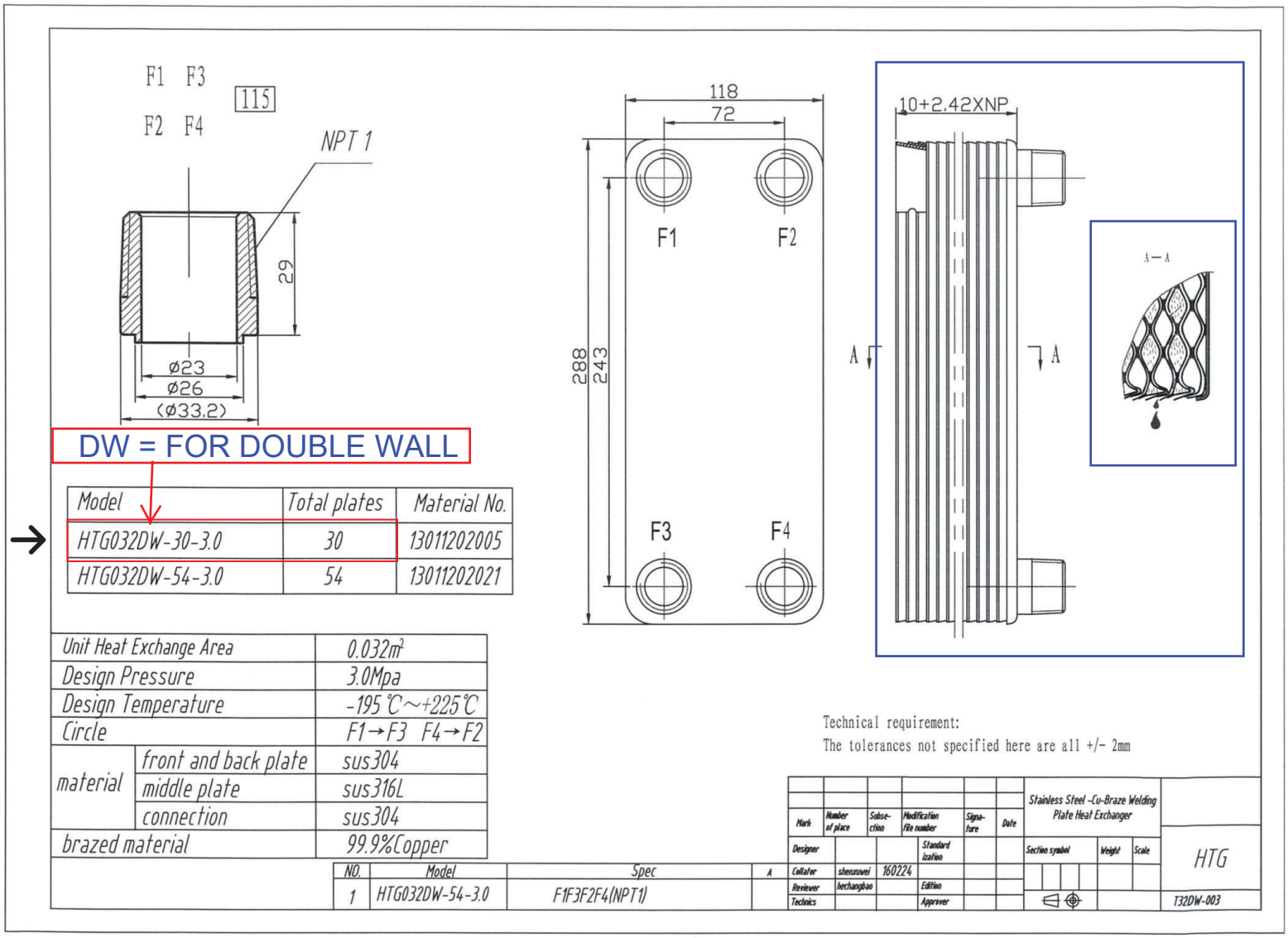

Model	Total plates	Material No.
HTG032DW-30-3.0	30	13011202005
HTG032DW-54-3.0	54	13011202021

Unit Heat Exchange Area		0.032m²
Design Pressure		3.0Mpa
Design Temperature		-195℃~+225℃
Circle		F1→F3 F4→F2
material	front and back plate	sus304
	middle plate	sus316L
	connection	sus304
brazed material		99.9%Copper

NO.	Model	Spec
1	HTG032DW-54-3.0	F1F3F2F4(NPT1)

Mécanique Nordique
Plumbing Heating Ventillation
mecanique.nordique@hotmail.com
1255 Rue J.A.Bombardier Lévis QC G7A 2P4
Tél : (418) 496-1109 Fax : (418) 496-3803

REVIEWED BY CONTRACTOR
Kudlik Construction Ltd.
NAME: Sandra Rousseau P.Eng
DATE: Jun 04, 2018

IQUALUIT WWTP UPGRADES

DRAWING FOR APPROVAL

ENGINEER: **NUNAMI STANTEC LIMITED**

DRAWING #: AD-012

Section	: 23 21 14
Article	: 2.1
Plans	: M802 TANK SCHEDULE (HEATING & PLUMBING)
Application	: DIAPHRAGM TYPE EXPANSION TANK
Brand	: AMTROL , EXTROL , THERM-X-TROL ,
Model	: 130-LBC , EX-1500-100 , ST-42V ,
Revised #	:
Supplyer	: WOLSELEY
Date	: **01/06/2018**
By	: Martin Boucher

STANTEC PROJECT #: 110126045
SUBMITTAL # AD-012

This review by Stantec is for general conformance with the design concept of Stantec's design of the:
☐ Architectural ☐ Electrical
☐ Structural ☐ Other
☑ Mechanical

Stantec

component(s) only and does not mean that Stantec has verified or approves the shop drawing(s). The Contractor remains solely responsible for the shop drawing(s) and this review by Stantec does not relieve the Contractor of the Contractor's responsibility for errors or omissions in the shop drawing(s) or for meeting all requirements of the contract documents. This review does not mean that Stantec approves the detailed design inherent in the shop drawing, responsibility for which shall remain with the Contractor submitting same, nor does this review mean that Stantec accepts any deviation of the shop drawing(s) from the contract documents. The Contractor is responsible for confirming all dimensions and correlating them at the job site, for all construction means, methods and techniques, and for coordination of construction work of all trades, including coordination of all shop drawings.

☐ REVIEWED
☑ REVIEWED, AS NOTED
☐ REVISE AND RESUBMIT
☐ NOT REVIEWED

DATE 2018-06-05
BY Brendan Zrum, P.Eng

TAG: TK-1.1 & TK-1.2

EXTROL®

Hydronic Expansion Tanks: LBC Series ASME

SPEC 23 21 14 2.1

125 PSIG Working Pressure

Construction

Shell	ASME Approved Steel
Bladder Design	Partial Acceptance; Replaceable
Bladder Thickness (models 35-100)	.087 In Minimum
Bladder Thickness (models 130-600)	.100 In Minimum
System Connection	NPTF Malleable Iron
Finish	Red Oxide Primer
Air Valve	Schrader Valve w/EPDM Seats
Factory Precharge	12 PSIG (.8 bar)

Application

- For use in closed, non-potable hydronic heating and chilled water systems.
- Replaceable, partial acceptance bladder design.
- Meets all ASME Code Section VIII, Division 1 standards.
- Available with optional sight glass and seismic restraints.

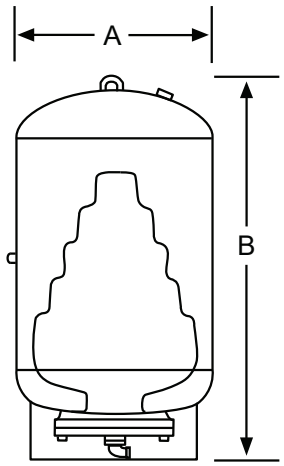

Performance

Maximum Operating Temperature	240°F (115°C)
Maximum Working Pressure	125 PSIG (8.6 bar)
Warranty	1 Year

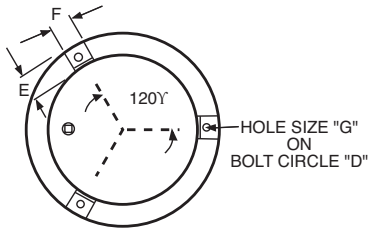

BOTTOM VIEW

ASME Models

Model Number	Tank Volume		Max. Accept. Factor	A Tank Diameter		B Tank Height		System Conn. (NPTF)	Shipping Weight	
	Gal	Lit		In	mm	Inch	mm	In	Lbs	Kg
35LBC	10	35	1.00	10	254	37	940	1	67	30
50LBC	13	50	.85	12	305	37	940	1	76	34
85LBC	22	85	.50	16	406	35	889	1	92	42
100LBC	26	100	.42	16	406	39	991	1	99	45
130LBC	34	130	.79	20	508	35	889	1	135	61
165LBC	44	165	.61	20	508	40	1016	1	149	68
200LBC	53	200	.51	24	610	41	1041	1	195	88
300LBC	80	300	.34	24	610	56	1422	1	233	106
400LBC	106	400	.50	24	610	69	1753	1	274	124
500LBC	132	500	.40	24	610	83	2108	1	310	141
600LBC	158	600	.34	30	762	67	1702	1	438	199

All dimensions and weights are approximate.

Optional Seismic Restraints

Tank Diameter	Bolt Circle	Dim.	Dim.	Hole Size
B	D	E	F	G
10	12⅝	2	2	9/16
12	14¾	2	2	9/16
16	16¾	2	2	9/16
20	16¾	2	2	9/16
24	18	2	2	9/16
30	24	4	4	⅞

Job Name _____ Notes _____

Engineer _____

Contractor _____

P.O. No. _____

Sales Rep. _____

Model No. _____

MADE IN USA

Amtrol Inc., 1400 Division Road, West Warwick, RI 02893 USA T: 401.884.6300 **www.amtrol.com**

MC 4400 (01/15)

TAG : TK-1.4

Models and Specifications



Extrol® In-Line Models

- Suitable for expansion control in most residential closed-loop boiler systems.
- Patent-pending InSight™ indicator cap provides visual check of tank condition.
- In-line mounting adds convenience and space savings.

EX Series Specifications

Model Number	Tank Volume (Gallons)	Max. Accept. Volume (Gallons)	Diameter (Inches)	Height (Inches)	System Connection (NPTM)	Shipping Weight (lbs.)
EX-15	2.0	1.0	8	13	½	5
EX-30	4.4	2.5	11	15	½	9
EX-60	7.4	2.5	11	23	½	14
EX-90	14.0	11.3	15	21	½	23

Maximum operating temperature: 240° F. Maximum working pressure: 100 PSIG. Factory precharge: 12 PSIG.

SPEC 22 21 14 2.1



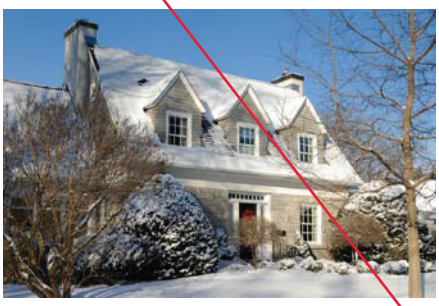

- Combination Packages include Air Purger and Automatic Float Vent.

EX Combination Packages

Model Number	EXTROL Model	Air Purger Model	Air Vent Model	Purger Connection (NPTF)	Shipping Weight (lbs.)
EX-1500-100	EX-15	443	700-C	1	10
EX-1500-125	EX-15	444	700-C	1¼	10
EX-3000-100	EX-30	443	700-C	1	14
EX-3000-125	EX-30	444	700-C	1¼	14

Maximum operating temperature: 240° F. Maximum working pressure: 100 PSIG. Factory precharge: 12 PSIG

TK-1.4 is not required
Deleted by addendum



Extrol Vertical Models

- For use in large residential and light commercial applications.
- Floor-standing with rugged steel base.
- Additional capacity to handle larger boiler systems.

SX Series Specifications

Model Number	Tank Volume (Gallons)	Max. Accept. Volume (Gallons)	Diameter (Inches)	Height (Inches)	System Connection (NPTF)	Shipping Weight (lbs.)
SX-30V	14	11.3	15	24	1	25
SX-40V	20	11.3	15	32	1	33
SX-60V	32	11.3	15	48	1	43
SX-90V	44	34.0	22	36	1¼	69
SX-110V	62	34.0	22	47	1¼	92
SX-130V	81	34.0	22	56	1¼	103
SX-160V	86	46.0	26	47	1¼	123

Maximum operating temperature: 240° F. Maximum working pressure: 100 PSIG. Factory precharge: 12 PSIG.

TOP VIEW

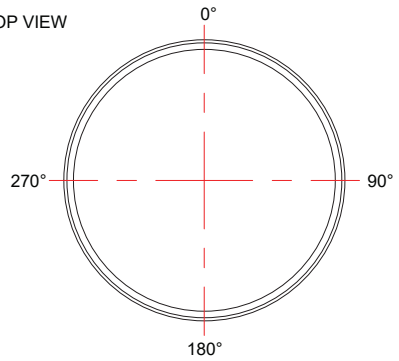

NOTES:

1. TANK IS MANUFACTURED TO ASTM-D-1998 STANDARD.
2. ALL DIMENSIONS ARE APPROXIMATE.

TAG: TK-1.5

SPEC ON DRAWING M802 TANK SCHEDULE

LID TOP VIEW

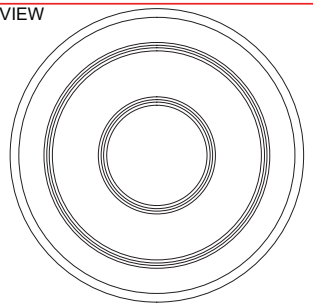

MATERIALS LIST		
ITEMS	DESCRIPTION	NOTES
A	OT-25 OPEN TOP TANK	
B	LID FOR OT-25	

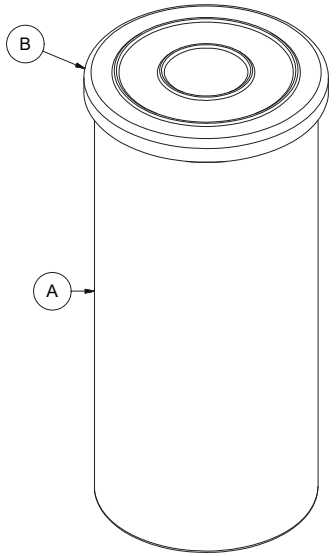

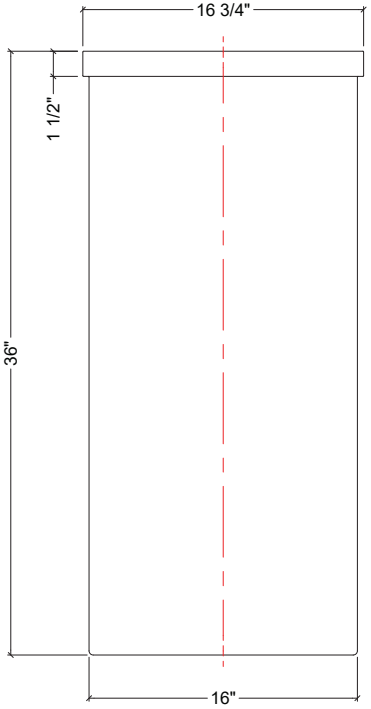

FRONT VIEW

TK-1.5 max temperature rating is to be at least 104.4°C

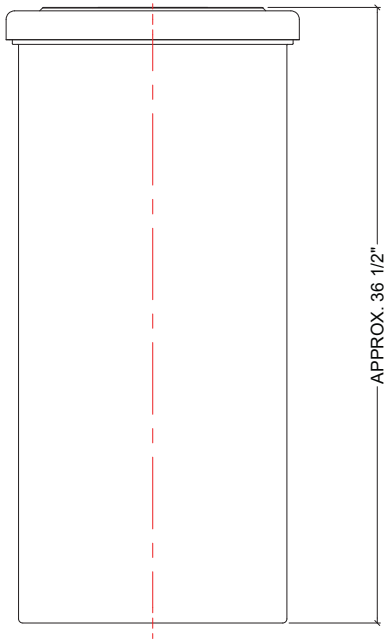

SIDE VIEW WITH LID

REV	DATE	DESCRIPTION	BY	APPD	REVD

REVISIONS

CUSTOMER

TITLE: 25 IG OPEN TOP TANK

ACO JOB NO:

PURCHASE ORDER NO:

PURCHASER'S EQUIP. NO:

THIS DRAWING IS THE PROPERTY OF ROTOPLAST INC. AND SHALL NOT BE COPIED OR TRANSFERRED WITHOUT THE WRITTEN CONSENT OF ROTOPLAST INC.

ENGINEERS SEAL

ACO CONTAINER SYSTEMS
DIVISION OF ROTOPLAST INC.
PICKERING - ONTARIO - CANADA
ACO CONTAINER SYSTEMS
DIVISION OF ROTOPLAST INC.
794 MCKAY RD.
PICKERING, ONTARIO, CANADA
TEL. 905-683-8222
FAX 905-683-2969

DESIGNED	
DRAWN	WM
CHECKED	
APPROVED	
SCALE	N.T.S.
DATE	03-03-16

DWG No: OT-25-L

REV: 0

Non-ASME THERM-X-TROL®

General Usage

TAG: TK-3.1 SPEC M802 TANK SCHEDULE

- Residential Water Heaters
- Office Buildings
- Apartment Buildings
- Dormitories
- Elderly Housing
- Extended Care Facilities
- Condominiums/Multiple Residential
- Food Service
- Laundromats
- Hospitals
- Other General-Use Hot Water Systems

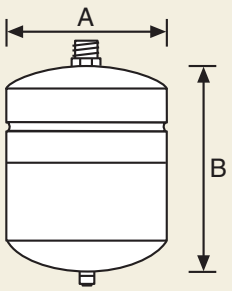

ST-5, ST-8, ST-12

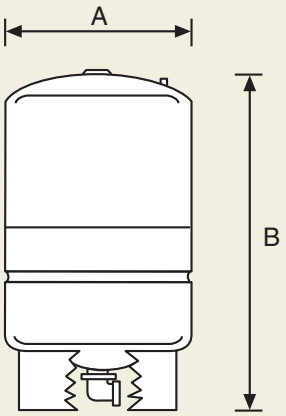

ST-25V through ST-210V

THERM-X-TROL Non-ASME Specifications

Model No.	Total Volume (Gals.)	Max. Acceptance Factor	Diameter (A)	Height (B)	System Connection	Ship Weight (lbs.)
ST-5	2.0	.45	8″	12 5/8″	3/4″ NPT	5
ST-8	3.2	.59	9″	15″	3/4″ NPT	7
ST-12	4.4	.73	11″	15″	3/4″ NPT	9
ST-25V	10.3	1.0	15 3/8″	19 1/4″	3/4″ NPT	23
ST-30V	14.0	.81	15 3/8″	23 7/8″	3/4″ NPT	25
ST-42V	20.0	.57	15 3/8″	31 5/8″	3/4″ NPT	33
ST-60V	34.0	1.00	22″	29 5/8″	1 1/4″ NPT	61
ST-80V	44.0	.77	22″	36″	1 1/4″ NPT	69
ST-180V	62.0	.55	22″	46 3/4″	1 1/4″ NPT	92
ST-200V	81.0	.41	22″	56 3/8″	1 1/4″ NPT	103
ST-210V	86.0	.54	26″	47 1/4″	1 1/4″ NPT	123
ST-451	158.0	.65	73 1/4″	30″	2″ NPT	508
ST-452	211.0	.65	91″	30″	2″ NPT	760
ST-453	264.0	.65	85 5/8″	36″	3″ NPT	810
ST-454	317.0	.65	98″	36″	3″ NPT	914
ST-455	370.0	.65	110 3/8″	36″	3″ NPT	1,018
ST-456	422.0	.65	81 7/8″	48″	3″ NPT	1,655
ST-457	528.0	.65	97 1/4″	48″	3″ NPT	1,925

Maximum Working Pressure: 150 PSI. All Models listed by NSF/ANSI 61® (excluding ST-451 – ST-457);
Maximum Allowable Working Temperature: ST-5 through ST-210V: 200°F; ST-451 through ST-457: 240°F;
Standard Factory Precharge: 40 PSIG (ST-5 – ST-210V); 55 PSIG (ST-451 – ST-457)

Mécanique Nordique
Plumbing
Heating
Ventillation
mecanique.nordique@hotmail.com
1255 Rue J.A.Bombardier Lévis QC G7A 2P4
Tél : (418) 496-1109 Fax : (418) 496-3803

REVIEWED BY CONTRACTOR
Kudlik Construction Ltd.
NAME: Sandra Rousseau P.Eng
DATE: Jun 04, 2018

IQUALUIT WWTP UPGRADES

DRAWING FOR APPROVAL

ENGINEER: **NUNAMI STANTEC LIMITED**

DRAWING #: AD-013

Section	: 23 21 14
Article	: 2.3
Plans	: M602
Application	: AIR SEPARATOR -VORTEX TYPE
Brand	: ARMSTRONG VAS
Model	: VAS-4
Revised #	:
Supplyer	: WOLSELEY
Date	: **01/06/2018**
By	: Martin Boucher

STANTEC PROJECT #: 110126045
SUBMITTAL # AD-013

This review by Stantec is for general conformance with the design concept of Stantec's design of the:
☐ Architectural ☐ Electrical
☐ Structural ☐ Other
☑ Mechanical

component(s) only and does not mean that Stantec has verified or approves the shop drawing(s). The Contractor remains solely responsible for the shop drawing(s) and this review by Stantec does not relieve the Contractor of the Contractor's responsibility for errors or omissions in the shop drawing(s) or for meeting all requirements of the contract documents. This review does not mean that Stantec approves the detailed design inherent in the shop drawing, responsibility for which shall remain with the Contractor submitting same, nor does this review mean that Stantec accepts any deviation of the shop drawing(s) from the contract documents. The Contractor is responsible for confirming all dimensions and correlating them at the job site, for all construction means, methods and techniques, and for coordination of construction work of all trades, including coordination of all shop drawings.

Stantec

☑ REVIEWED
☐ REVIEWED, AS NOTED
☐ REVISE AND RESUBMIT
☐ NOT REVIEWED

DATE 2018-06-04
BY Brendan Zrum, P.Eng

TAG: AIR SEPARATOR

ARMSTRONG

SPEC 23 21 14 2.3

FILE NO:	37.621
DATE:	Sep. 08, 2011
SUPERSEDES:	37.621
DATE:	Dec. 18, 2007

Vortex Air Separators - Models VA / VAS: 4" to 12"

SUBMITTAL

JOB: _____ REPRESENTATIVE: _____

ORDER NO: _____ DATE: _____

ENGINEER: _____ SUBMITTED BY: _____ DATE: _____

CONTRACTOR: _____ APPROVED BY: _____ DATE: _____

MODEL NO. ORDERED: _____ QTY.: _____

TAG NO.: _____

All models designed and built to ASME Pressure Vessel Code, Section VIII, Division 1.

TYPICAL SPECIFICATION

Furnish & install an Armstrong Vortex® Air Separator, Model ___ VA or Model ___ VAS (with strainer) with flanged tangential connections as shown on plans. The unit shall be designed and built in accordance with the latest revisions of ASME Pressure Vessel Code, Section VIII, Division 1. A blowdown connection is provided for routine cleaning of the unit.

TECHNICAL DATA	
Max. Working Temperature	375°F (190°C)
Max. Working Pressure	4" TO 6" Models: 160 psi (1103 kPa) 8" TO 12" Models: 165 psi (1140 kPa)
Connection Type	150# Flanged ANSI (RFSO)

MATERIALS OF CONSTRUCTION	
Shell	4" TO 6" Models: Cast Iron 8" TO 12" Models: Fabricated Steel
Strainer	Steel Mesh (1/4" x 3/4")
Gasket	Non-Asbestos

MODEL		DIMENSION INCHES (MM)										MAX. FLOW RATE IN USGPM (L/S) FOR LINE VELOCITY FT/S (M/S)			WEIGHT LBS. (KG)		STRAINER SCREEN FREE AREA
LESS STRAINER	WITH STRAINER	A	B	C	D	E	F	H	J	K	N	4 (1.22)	6 (1.83)	8 (2.44)	VA	VAS	SQ. IN. (SQ. CM)
VA-4	VAS-4	4.00 (102)	1.50 (38)	9.50 (241)	18.00 (457)	2.25 (57)	6.80 (173)	22.25 (565)	10.75 (273)	16.00 (406)	9.00 (229)	160 (10.1)	240 (15.1)	320 (20.2)	121 (55)	151 (69)	76 (490)
VA-5	VAS-5	5.00 (127)	1.50 (38)	11.00 (279)	20.00 (508)	2.88 (73)	8.69 (221)	28 (711)	12.75 (324)	19.00 (483)	10.00 (254)	250 (9.84)	375 (14.8)	500 (31.6)	173 (79)	207 (94)	124 (800)
VA-6	VAS-6	6.00 (152)	1.50 (38)	12.50 (318)	24.00 (610)	4.00 (102)	9.85 (250)	32.24 (819)	16.00 (406)	22.00 (558)	12.00 (305)	360 (22.7)	540 (34.1)	720 (45.4)	264 (120)	306 (139)	183 (1181)
VA-8	VAS-8	8.00 (203)	2.00 (51)	16.00 (406)	28.00 (711)	5.00 (127)	12.81 (310)	41.25 (1048)	20.00 (508)	26.00 (660)	14.00 (356)	630 (39.8)	940 (59.3)	1250 (78.9)	228 (103)	332 (151)	302 (1949)
VA-10	VAS-10	10.00 (254)	2.00 (51)	20.00 (508)	32.00 (813)	5.75 (146)	15.00 (381)	49.50 (1257)	24.00 (610)	29.00 (737)	16.00 (406)	990 (62.5)	1500 (94.6)	1980 (124.9)	390 (177)	547 (248)	452 (2916)
VA-12	VAS-12	12.00 (305)	2.00 (51)	26.00 (660)	38.00 (965)	7.75 (197)	17.56 (446)	61.25 (1556)	30.00 (762)	36.00 (914)	19.00 (483)	1400 (88.3)	2100 (132.5)	2800 (176.7)	609 (276)	856 (388)	679 (4381)

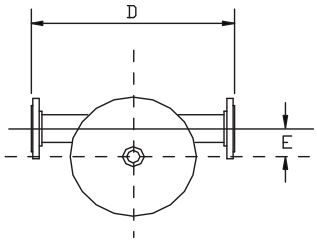

MODEL VA

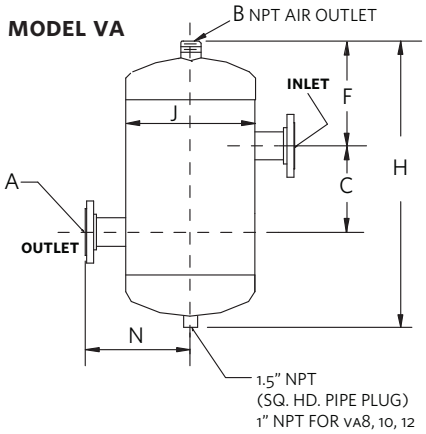

MODEL VAS

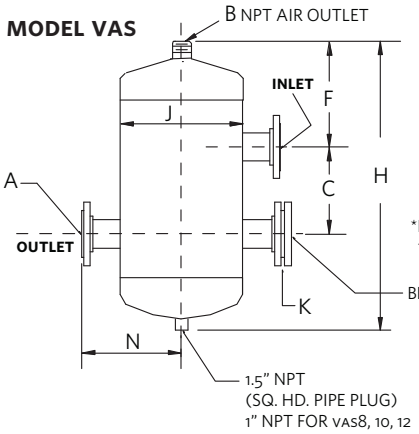

*K is distance required to remove strainer.

S. A. Armstrong Limited
23 Bertrand Avenue
Toronto, Ontario
Canada, M1L 2P3
T: 416-755-2291
F: 416-759-9101

Armstrong Pumps Inc.
93 East Avenue
North Tonawanda, New York
U.S.A. 14120-6594
T: 716-693-8813
F: 716-693-8970

Armstrong Integrated Limited
Wenlock Way
Manchester
United Kingdom, M12 5JL
T: +44 (0) 8444 145 145
F: +44 (0) 8444 145 146

© S.A. Armstrong Limited 2011

Mécanique Nordique
Plumbing
Heating
Ventillation
mecanique.nordique@hotmail.com
1255 Rue J.A.Bombardier Lévis QC G7A 2P4
Tél : (418) 496-1109 Fax : (418) 496-3803

REVIEWED BY CONTRACTOR
Kudlik Construction Ltd.
NAME: Sandra Rousseau P.Eng
DATE: Jun 04, 2018

IQUALUIT WWTP UPGRADES

DRAWING FOR APPROVAL

ENGINEER: **NUNAMI STANTEC LIMITED**

DRAWING #: AD-014

Section	: 23 52 00
Article	: 2.1 TO 2.3
Plans	: M802 BOILER SCHEDULE
Application	: HEATING BOILER
Brand	: BUDERUS WITH RIELLO BURNER
Model	: G515/11 , RL50/M
Revised #	:
Supplyer	: LES CONTRÔLES MÉTHOT INC
Date	: **01/06/2018**
By	: Martin Boucher

STANTEC PROJECT #: 110126045
SUBMITTAL # AD-014

This review by Stantec is for general conformance with the design concept of Stantec's design of the:
☐ Architectural ☐ Electrical
☐ Structural ☐ Other
☑ Mechanical

component(s) only and does not mean that Stantec has verified or approves the shop drawing(s). The Contractor remains solely responsible for the shop drawing(s) and this review by Stantec does not relieve the Contractor of the Contractor's responsibility for errors or omissions in the shop drawing(s) or for meeting all requirements of the contract documents. This review does not mean that Stantec approves the detailed design inherent in the shop drawing, responsibility for which shall remain with the Contractor submitting same, nor does this review mean that Stantec accepts any deviation of the shop drawing(s) from the contract documents. The Contractor is responsible for confirming all dimensions and correlating them at the job site, for all construction means, methods and techniques, and for coordination of construction work of all trades, including coordination of all shop drawings.

Stantec

☑ REVIEWED
☐ REVIEWED, AS NOTED
☐ REVISE AND RESUBMIT
☐ NOT REVIEWED

DATE 2018-06-05
BY Brendan Zrum, P.Eng

MET HOT

Methot Controls Inc.

Québec : 1060, boul. Michèle-Bohec, Suite 101, Blainville, Québec, J7C 5E2 **Fax :** (450) 433-6866 / 800-433-3398 **Tel :** (450) 433-9878 / 800-638-4682

Ontario : Sales Office Toronto Ontario, All mailing to Quebec Head Office **Fax :** (905) 850-8012 / 800-433-3398 **Tel :** (905) 850-3037 / 800-638-4682

Engineering drawing for Projet

Iqaluit Waste Water Plant

Presented to

Martin Boucher
Mécanique Nordique
1255, Rue J.-A. Bombarider, Lévis, Quebec, G7A 2P4
Tel : (418) 496-1109 **Fax :** (418) 496-3803

Engineering Company

Martin Boucher
Mécanique Nordique
1255, Rue J.-A. Bombarider, Lévis, Quebec, G7A 2P4
Tel : (418) 496-1109 **Fax :** (418) 496-3803

Our Reference

1810208S1R5
Rev. : 5

Drawings presented by

Michael McNamara Ext:201

01-06-2018

Lot #1 **G515/11-K**

Quantity	Brand	Model	Description
2		ME-BLR	Boiler

Accessories

Buderus	G515/11-K	Cast iron boiler	
Input capacity	1881 Mbh	- Sections	: Field assembly
- Output capacity	: 1582 Mbh	- Item	: 2-51511
- Construction	: 87 Psig	-	:
Conbraco	10-615-10	Safety valve set at 50 Psig (1 x1-1/4)	
Buderus	CB-G515-G615	Cleaning Brush Kit G515 and G615	

Additional Information

The standard safety vale setting is 50 Psig. Other valve settings are available on request. By approving these submittals you are accepting this selection.

Quantity	Brand	Model	Description
2		ME-BUR	Burner

Accessories

Riello	RL50/M-208	Burner	
Fuel	Oil	- Item	: C9513300
- Operation	: Modulation	- PID controller RWF55	: 20094961
- Voltage	: 208V/3Ph/60Hz	-	:
Riello	(C7000327)	Relay	
Type	Relay	- Ring Alarm Bell	: No
- Function	: Power ON	- Dry Contact Seperate	: No

Quantity	Brand	Model	Description
2		ME-LAB	Labour

Specification Sheet

- Unloading	: Contractor	- Jacketing	: Contractor
- Positioning	: Contractor	- Control Installation	: Contractor
- Hydrostatic Test	: Contractor	- Service Hook-up	: Contractor
- Burner Installation	: Contractor	- Connection to DDC	: By others
- Harness Connection	: Contractor	- Start-up	: Contractor
- Section Assembly	: Contractor	- Workmanship Warranty	: Contractor

---

Quantity	Brand	Model	Description
1		(NOTE-SPEC)	Our proposal is based on the following documents only

Specification Sheet

- Specification Section	: 235200	-	:

Additional Information

Exceptions :

Art.2.1.12 Supply and return only

Art.2.1.17 Anchor bolts by others

Art.2.1.18 By others

Art.2.1.19 By others

Art.2.2.2.2-3 Pressure/temperature gauge combine

Art.2.2.2.5-6 By others

Art.2.3.2.4-6 By others

Art.2.3.3.5.4 RWF55

Art.3.2 By others

Art.3.5 By others

Venting by others

BUDERUS

G315 | G515 | G615

Cast Iron Commercial Boilers



- High Efficiency—Combustion Efficiencies Up to 88.2%
- 350 to 3,982 MBH Output
- Thermostream Design Eliminates Thermal Shock

Superior Equipment by Design

Comfortable. Efficient. Intelligent Heating.

Buderus



G315 | G515 | G615

Thermostream Design

The Buderus developed Thermostream principle is proven for higher efficiency and improved system reliability in high volume heating systems. Condensation and thermal shock are made impossible by design, as cool return water mixes internally and is preheated with supply water before exposure to directly heated surfaces. This process eliminates hot and cold spots in the boiler and balances water flow throughout all boiler sections. The Thermostream design permits continuous low temperature operation under normal return water without requiring a minimum boiler return temperature. Internal water circulation and injection into each boiler section combined with deflection plates ensure condensate free boiler operation—even under no flow conditions.

A Better Way to Heat

The Buderus commercial Thermostream boilers are designed with many physical attributes setting them above the competition and increasing their longevity and efficiency. The burner doors are field adjustable to swing fully open from either side, to enable the boilers to fit in any location. These boilers are shipped knocked down for easy transport, the G315 and the G515 can also be shipped as an assembled block. Due to the unique chamber design, no refractory materials are used. This reduces the number of service calls and maximizes heat transfer. Buderus precision castings eliminate the need for manual grinding. Precision beveled steel push nipples join cast iron sections and high temperature flue sealants are used to sustain pressurized operation.

The G315 and G515 come with a full 3½" of thermal insulation, and the G615 comes with a full 4" of thermal insulation to reduce standby heat loss. All Buderus cast iron commercial boilers are manufactured with the Buderus GL-180M cast iron with a silicone "barrier skin." To streamline the appearance of the boilers, the supply and return connections for the G315 are located at the rear of the boiler, while the G515/G615 have top supply and a rear return. These boilers are for use with hot water and can be installed with gas, oil or dual fuel burners.

Intelligent Heating—by Design

Buderus, the world leader in heating technology, manufactures the highest quality boilers based on centuries of experience. With its innovative design and quality manufacturing, a Buderus boiler will outlast and out-perform virtually any other commercial hot water boiler system in the world.

The G315, G515 and G615 are designed to maximize the heating value of every ounce of fuel and are built with the highest quality materials. Established in 1731, Buderus uses state-of-the-art techniques in the design and manufacturing of its boilers.



Design Benefits

- Eliminates the need for bypass loop or shunt pump
- Eliminates hot and cold spots in the boiler
- Allows operation at low return water temperatures without thermal shock concerns
- Minimum supply temperature of 122°F with standard control
- Ensures balanced water flow through all boiler sections

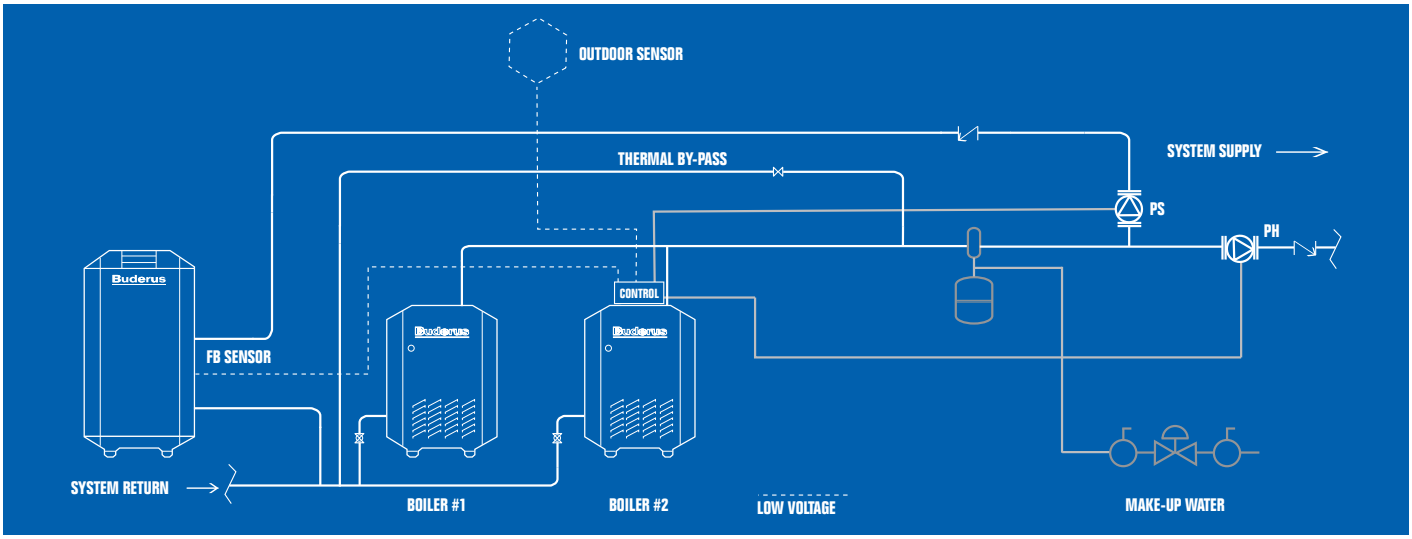

NOTE: This drawing is conceptual in nature and does not purport to address all design, installation or safety considerations.

Boiler Construction

The boiler sections are assembled with beveled, surface-profiled push nipples for long, trouble-free watertight operation. Boiler flueways are manufactured to be gas tight with tongue and groove section design and elastic, high temperature resistant sealing rope. A permanent dry door gasket ensures repeated positive sealing of the full swing burner door. Because flue gases cannot escape through the seams between boiler sections, the boilers are able to retain heat more efficiently.

GL-180M Gray Cast Iron

Buderus GL-180M silicone injected, gray cast iron obtains its superior material characteristics primarily from a high carbon (graphite) and silicone content.

Buderus GL-180M gray cast iron has excellent corrosion resistance, exceptional casting characteristics, 40% greater flexibility and elasticity as well as high thermal conductivity. Buderus developed the special substances that are impregnated during the casting process to improve the mechanical properties of cast iron. The graphite precipitates into smaller, modified flakes which produce GL-180M cast iron with 40% greater elasticity and a high silicone barrier for corrosion protection. All sections are heat treated to relieve thermal stresses. Additional elements further enhance the properties of the GL-180M. The graphite appears in two different forms in the microstructure: nodular form producing excellent tensile strength and great elasticity and graphite flakes producing excellent corrosion resistance against acidic combustion products.

Full Three Pass Design—for High Efficiency

Buderus developed the full three pass system to increase the heat transfer and efficiency of boilers. This design allows more heat to be transferred during all three passes, unlike conventional boilers that only use one pass to transfer heat. This system maximizes the total possible heat available with the lowest fuel consumption possible. To greatly decrease standby loss Buderus has manufactured a 3½" and 4" thick thermal insulation.

The Three-Pass Boiler is Designed for:

- Optimized combustion with positive pressure-fired boilers and tailored chamber geometry—no need for a heat-consuming refractory or target wall eliminating the need for costly repairs
- Minimal stack losses with the modified three-pass flue design's large heat transfer areas
- Low standby losses with a full 3½" to 4" jacket of thermal insulation around the entire block—even underneath the boiler

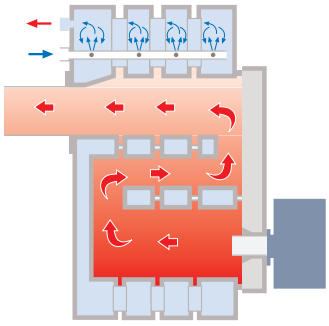

How it Works

The flame fires into the first chamber. Then the flue products flow through the second pass to the front of the boiler. From there they reverse direction again—moving through the third pass to the back, and finally exiting via the flue connection into the chimney. Because the gases are held in the boiler longer this allows the cast iron to absorb the maximum amount of heat, resulting in a lower stack temperature and a higher efficiency.

SPECIFICATIONS		
BOILER MODEL	G515/11	G515/11
INPUT CAPACITY	13.6 USG/Hr	51.5 L/Hr
GROSS OUTPUT	1 652 MBTU/Hr	483.8 KW
FORCE	47.3 BHP	463.9 KW
DESIGN PRESSURE	87 PSI	600 KPa
HEATING SURFACE	186.7 Ft²	17.3 M²
MAXIMUM TEMPERATURE	240 °F	116 °C
WATER CONTENT	107 Gal	407 L
DRY WEIGHT	4 188 Lbs	1 899 Kg
OPERATING WEIGHT	5 074 Lbs	2 031 Kg

CONNECTIONS		
VK	SUPPLY	4"
RK	RETURN	4"
EL	DRAIN	3/4" NPT
V	VENT	10"
A	HIGH TEMPERATURE AQUASTAT	3/4" NPT
B	PRESSURE AND TEMPERATURE GAUGE	1/2" NPT
C	TEMPERATURE PROBE	3/4" NPT
D	LOW WATER CUTOFF	3/4" NPT
E	SAFETY VALVE	1-1/4" NPT

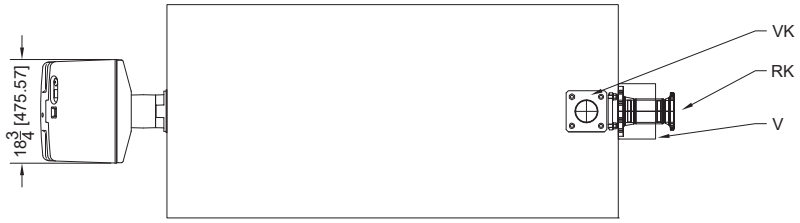

PLAN VIEW

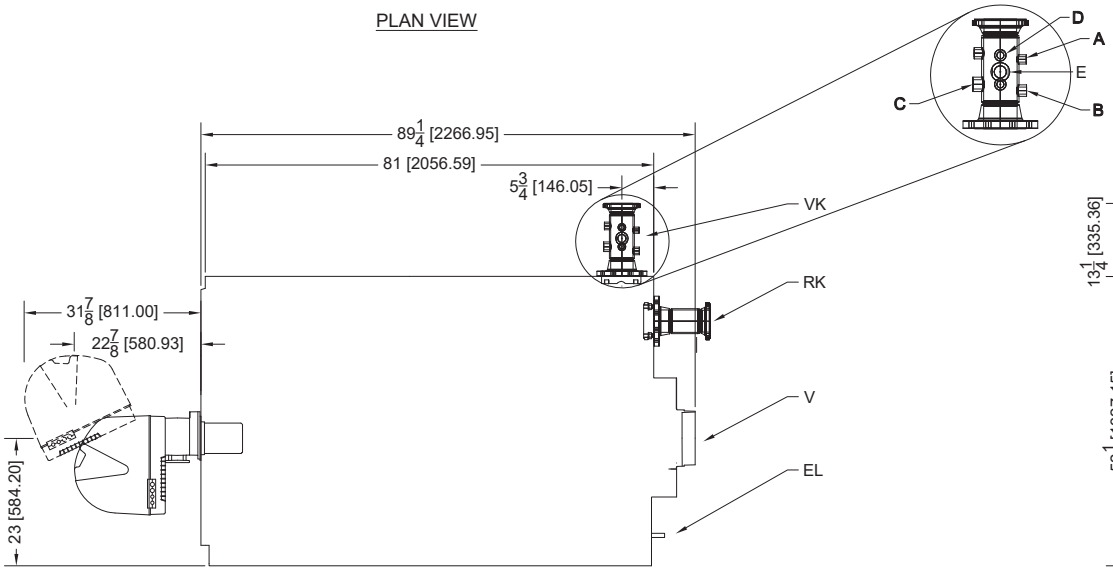

SIDE VIEW

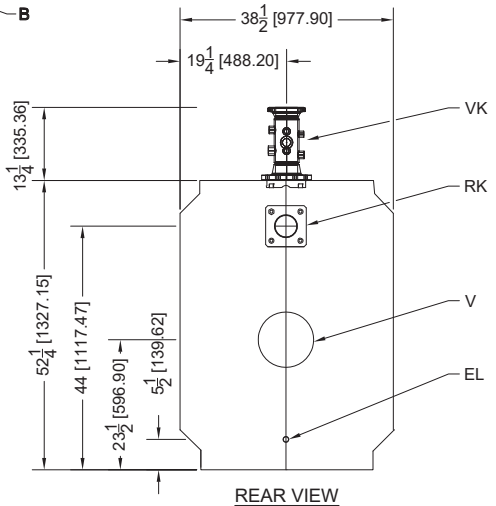

REAR VIEW

Notes:

1. Dimensions are written like this: INCHES [MM]

METHOT
Tel.: 1-800-638-4682 Fax.: 1-800-433-3398
www.methot.ca

G515/11

DIMENSIONS

#	REVISIONS	DATE	CAD FILE
3	Dimensions	06/JUL/15	G515-11 (Rev 3).dwg

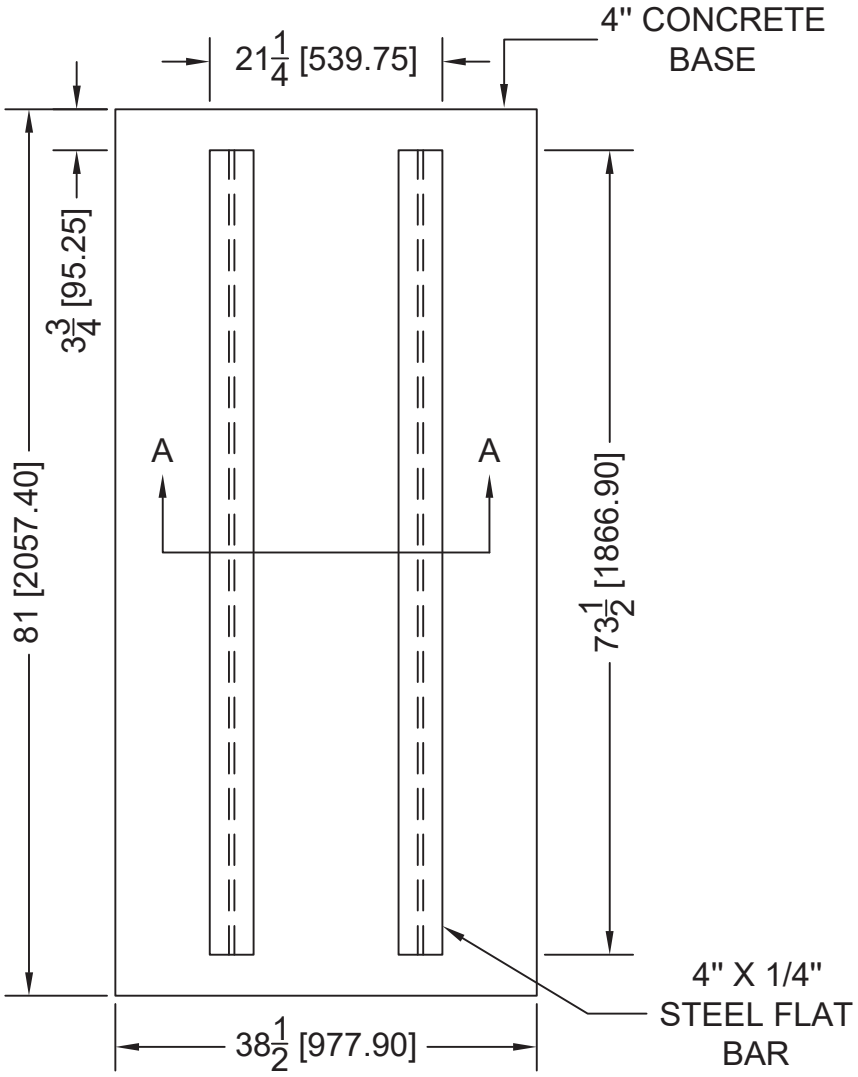

IMPORTANT: BUDERUS REQUEST A FLAT SURFACE FOR THE BOILER ASSEMBLY

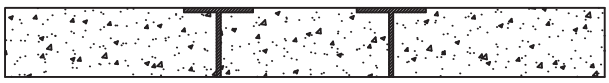

VIEW A-A

FLAT BAR INSTALLATION FOR FIELD ASSEMBLY ON A NEW CONCRETE BASE

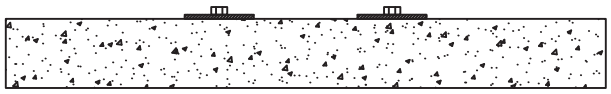

VIEW A-A

FLAT BAR INSTALLATION FOR FIELD ASSEMBLY ON AN EXISTING CONCRETE BASE

NOTE: FLAT BAR SUPPLIED BY CONTRACTOR

METHOT
Tel.: 1–800–638–4682 Fax.: 1–800–433–3398
www.methot.ca

G515/11

FOUNDATIONS

#	REVISIONS	DATE	CAD FILE

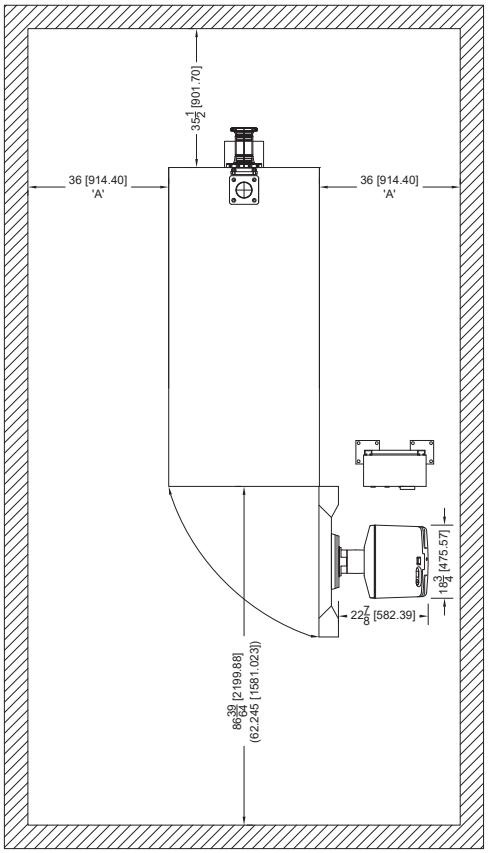

Notes:

1. Dimensions are written like this: INCHES [MM]
2. General minimum clearances are shown in parenthesis. Feel free to contact METHOT for special applications.

A. Minimum clearances can be as short as 12" [305] as long as there is no gas train, control panel or door hinges on this side.

B. 1m minimum clearance in front of the burner, our clearances already include it.

METHOT
Tel.: 1-800-638-4682 Fax.: 1-800-433-3398
www.methot.ca

G515/11

RECOMMENDED CLEARANCES FOR 1 BOILER

#	REVISIONS	DATE	CAD FILE
3	Boiler Clearances	06/JUL/15	G515-11 (Rev 3).dwg

RIELLO

GB

Light oil burners

Low-high-low or modulating operation

c UL us LISTED



CODE	MODEL
3471070	RL 28/M
3471270 - 3471470	RL 38/M
3471670 - 3471675	RL 50/M

2915762 (6) - 03/2013

TECHNICAL DATA

MODEL			RL 28/M	RL 38/M	RL 38/M	RL 50/M	RL 50/M
Output (1)	High	MBtu/hr (3)	630 - 1260	896 - 1708	896 - 1708	1120 - 2240	1120 - 2240
		GPH	4.5 - 9	6.4 - 12.2	6.4 - 12.2	8 - 16	8 - 16
	Low	MBtu/hr (3)	336 - 630	378 - 896	378 - 896	490 - 1120	490 - 1120
		GPH	2.4 - 4.5	2.7 - 6.4	2.7 - 6.4	3.5 - 8	3.5 - 8
Fuel			# 2 fuel oil				
Operation			Low - high or modulating				
Nozzle		number	1 (nozzle with return)				
Standard applications			Boilers: water, steam, thermal oil				
Ambient temperature		°F	32 - 104 (0 - 40 °C)				
Combustion air temperature		°F max	140 (60 °C)				
Main power supply (+/- 10%)		V/Ph/Hz	120/1/60		208-230 / 460 / 575 / 3/ 60		120-230/1/60
Fan motor		rpm	3400	3400	3400	3400	3400
		W - HP	370 - 0.5	370 - 0.5	550 - 0.75	550 - 0.75	550 - 0.75
		V	120	120	208 - 230 / 460 / 575	208 - 230 / 460 / 575	120 - 230
		A	5.2	5.2	3.2 - 1.6 - 1.3	3.2 - 1.6 - 1.3	9.8 - 4.9
Motor capacitor		µF	45				20
Ignition transformer		V1 - V2	120 V - 2 x 5 kV				
		I1 - I2	3.7 A - 35 mA				
Pump	delivery (at 290 PSI)	GPH	32				
	pressure range	PSI	145 - 290				
	fuel temperature	°F max	140 (60 °C)				
Electrical power consumption		W max	550	600	700	800	750
Electrical protection			NEMA 1				
Noise levels (2)		dBA	68	70	70	75	75

(1) Reference conditions: Ambient temperature 68 °F (20 °C) - Barometric pressure 394" W.C. - Altitude 329 ft.
(2) Sound pressure measured in manufacturer's combustion laboratory, with burner operating on test boiler and at maximum rated output.
(3) Equivalent Btu values based on 1 USGPH = 140,000 Btu/hr.

Burner models designations

Model	Code	Voltage	Flame safeguard
RL 28/M	**C9511300** (3471070)	120/1/60	Burner mounted
RL 38/M	**C9512300** (3471470)	208-230/460/3/60	Burner mounted
	C9512301 (3471470)	575/3/60	Burner mounted
	(3471270)	120/1/60	Burner mounted
RL 50/M	**C9513300** (3471670)	208-230/460/3/60	Burner mounted
	C9513301 (3471670)	575/3/60	Burner mounted
	(3471675)	120-230/1/60	Burner mounted

ACCESSORIES (optional):

Modulating control kit
Two components should be ordered:
- modulating control to install on the burner;
- probe to install on the boiler.

PARAMETER TO BE CHECKED		PROBE		MODULATING CONTROL	
	Range	Type	Code	Type	Code
Temperature	- 212...+ 932 °F (- 100...+ 500 °C)	PT 100	3010110	RWF40	3010212
Pressure	0...36.3 PSI (0...2.5 bar)	Probe with output	3010213		
	0...232 PSI (0...16 bar)	4...20 mA	3010214		

Kit for lengthening the combustion head
L = Standard length
L1 = Length obtainable with the kit

COD. 3010277	L = 9 15/32"	L1 = 13 13/16"	• RL 28/M
COD. 3010278	L = 9 15/32"	L1 = 13 13/16"	• RL 38/M
COD. 3010279	L = 9 15/32"	L1 = 13 13/16"	• RL 50/M

Flame inversion boiler kit
COD. 3010178 • RL 28/M - RL 38/M
COD. 3010179 • RL 50/M

Important:
The installer is responsible for the supply and installation of any safety device(s) not indicated in this manual.

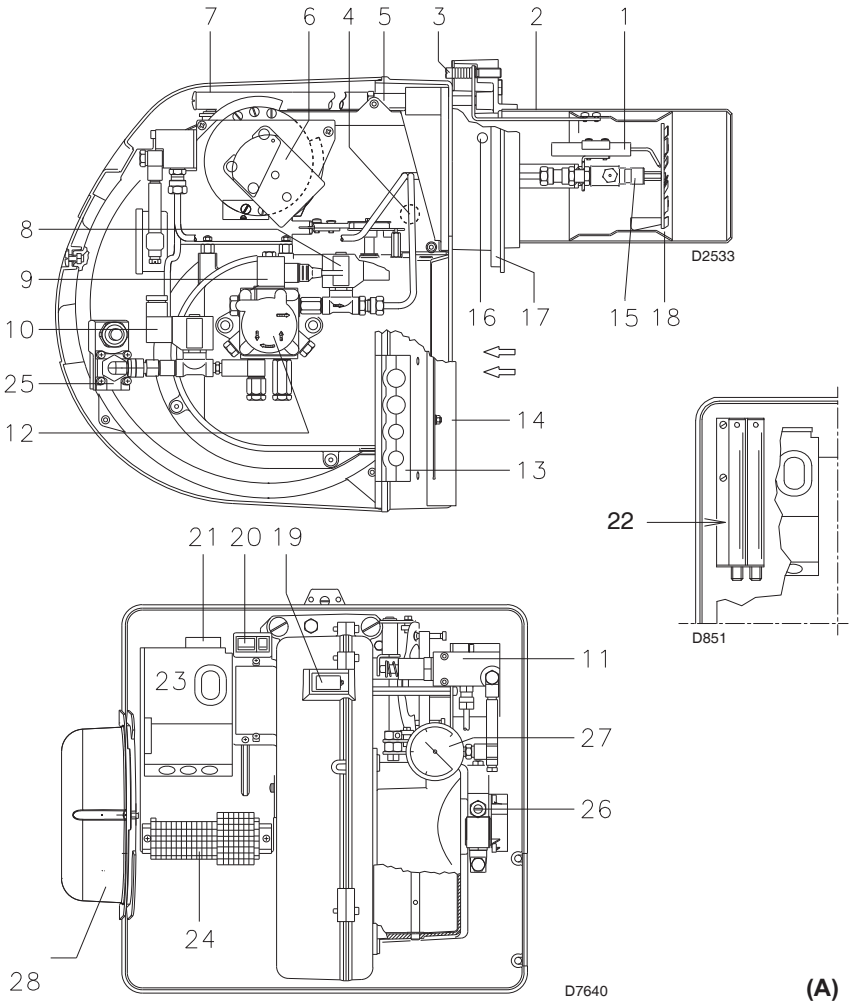

(A)

inch	A	B	C	lbs
RL 28/M	39 31/32“	24 13/16“	19 11/16“	86
RL 38/M	39 31/32“	24 13/16“	19 11/16“	90
RL 50/M	39 31/32“	24 13/16“	19 11/16“	92
RL 50/M	39 31/32“	24 13/16“	21 11/16“	94

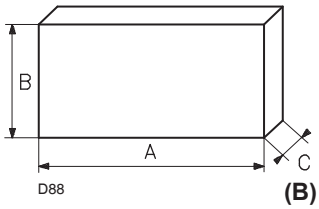

(B)

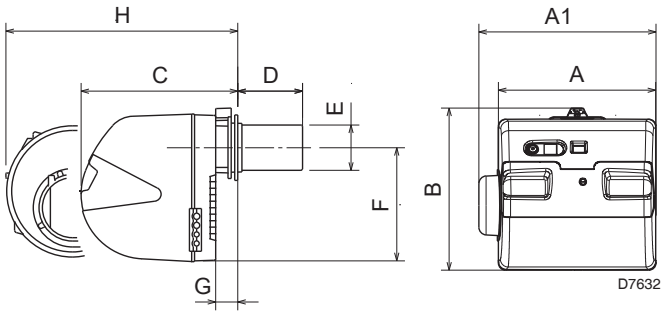

inch	A	A1	B	C	D (1)
RL 28/M	18 23/32”	-	18 21/32”	18 13/32”	9 15/32” - 13 13/16”
RL 38/M	18 23/32”	-	18 21/32”	18 13/32”	9 15/32” - 13 13/16”
RL 50/M three-phase	18 23/32”	-	18 21/32”	18 13/32”	9 15/32” - 13 13/16”
RL 50/M single-phase	-	21 3/16”	18 21/32”	18 13/32”	9 15/32” - 13 13/16”

inch	E	F	G	H (1)
RL 28/M	5 1/2”	13 27/32”	2 1/16”	26 15/32” - 31 3/4”
RL 38/M	5 1/2”	13 27/32”	2 1/16”	26 15/32” - 31 3/4”
RL 50/M three-phase	5 31/32”	13 27/32”	2 1/16”	26 15/32” - 31 3/4”
RL 50/M single-phase	5 31/32”	13 27/32”	2 1/16”	26 15/32” - 31 3/4”

(C)

(1) Blast tube: short - long (obtainable with the kit)

BURNER DESCRIPTION (A)

1 Ignition electrodes
2 Combustion head
3 Screw for combustion head adjustment
4 Photocell (cad cell)
5 Screw for fixing fan to flange
6 Servomotor provides adjustment of fuel delivery regulator and of air damper. When the burner is not operating the air damper is fully closed in order to reduce heat dispersion from the boiler due to the flue draft which draws air from the fan suction inlet.
7 Slide bars for opening the burner and inspecting the combustion head
8 Safety solenoid valve
9 Pump delivery valve
10 Valve on nozzle return
11 Pressure regulator on nozzle return
12 Pump
13 Plate prearranged to drill 4 holes for the passage of hoses and electrical cables.
14 Air damper
15 Non-drip nozzle holder
16 Fan pressure test point
17 Boiler mounting flange
18 Flame stability disk
19 Flame inspection window
20 Power switch for different operation:
automatic - manual - off
Button for:
power increase - power reduction
21 Motor contactor and thermal overload with reset button (RL 38 - 50/M)
22 Extensions for slide bars 7)
23 Flame safeguard with lock-out pilot light and lock-out reset button
24 Terminal strip
25 High oil pressure switch
26 Pump pressure adjustment
27 Pressure gauge for pressure on nozzle return
28 Protection (for RL 50/M single-phase burner)

Two types of burner failure may occur:
Flame safeguard lock-out:
If the flame relay 23)(A) pushbutton lights up, it indicates that the burner is in lock-out.
To reset, press the pushbutton.
Motor trip (RL 38 - 50/M):
release by pressing the pushbutton on thermal overload 21)(A).

PACKAGING - WEIGHT (B) - Approximate measurements

- The burners are shipped in cardboard boxes with the maximum dimensions shown in Table (B).
- The weight of the burner complete with packaging is indicated in Table (B).

MAX. DIMENSIONS (C) - Approximate measurements
The maximum dimensions of the burner are given in (C).
Inspection of the combustion head requires the burner to be opened and the rear part withdrawn on the slide bars.
The maximum dimension of the burner, without casing, when open is give by measurement H.

STANDARD EQUIPMENT

2 - Flexible hoses
2 - Gaskets for flexible hoses
1 - Burner head gasket
4 - Screws to secure the burner flange to the boiler 3/8 W x 1”
1 - Adaptor G 1/8“ / 1/8“ NPT
1 - Instruction booklet
1 - Spare parts list

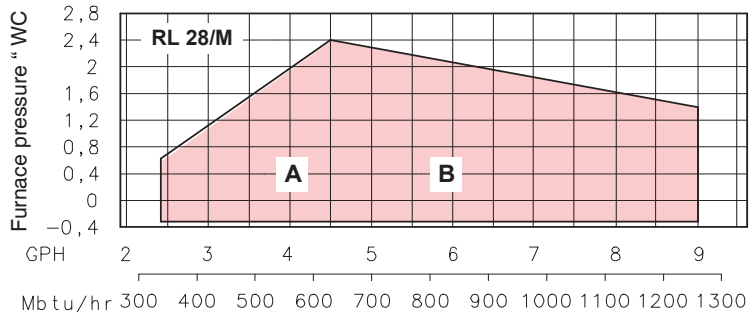

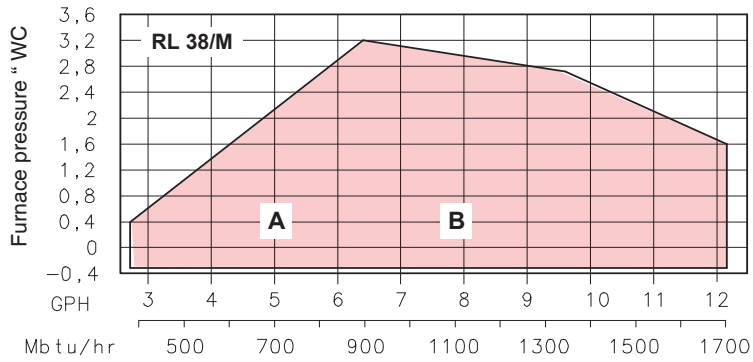

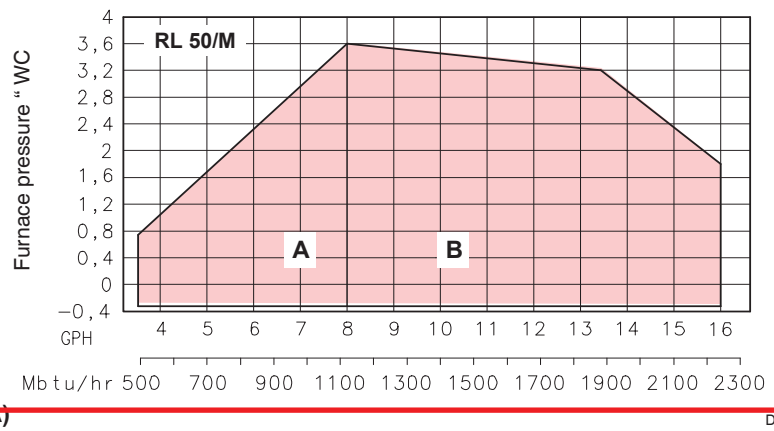

(A) D2526

inch	A	B	C
RL 28/M	$6^{5}/_{16}$"	$8^{13}/_{16}$"	$^{3}/_{8}$ W
RL 38/M	$6^{5}/_{16}$"	$8^{13}/_{16}$"	$^{3}/_{8}$ W
RL 50/M	$6^{5}/_{16}$"	$8^{13}/_{16}$"	$^{3}/_{8}$ W

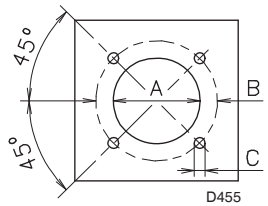

(B)

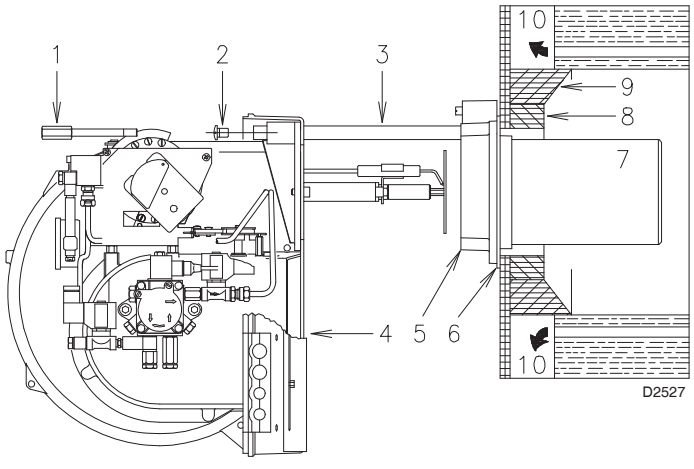

(C)

FIRING RATES (A)

During operation, burner output varies between:
- **MINIMUM OUTPUT** : area A
- **MAXIMUM OUTPUT** : area B

Graphs (A):
Horizontal axis : Burner output
Vertical axis : Heater furnace pressure
The firing rate may be found by plotting a vertical line from the desired delivery and a horizontal line from the pressure in the combustion chamber. The intersection of these two lines is the firing rate which must lie within area A, for MIN output, and within area B, for MAX output.
Important:
The FIRING RATE area values have been obtained considering a surrounding temperature of 68 °F (20 °C), and an atmospheric pressure of 394" W.C. and with the combustion head adjusted as shown on page 6.

Note:
The FIRING RATE areas given in figure (A) have been reduced by 10% with respect to the maximum range that can be reached.

Consult Appendix on page 22 for operation at different ambient temperatures and / or altitudes.

MINIMUM FURNACE DIMENSIONS

The firing rates were set in relation to certified test boilers.
Figure below indicates the diameter and length of the test combustion chamber.

Example:
output 1388 MBTU/h:
diameter 20 inch - length 4.9 ft.

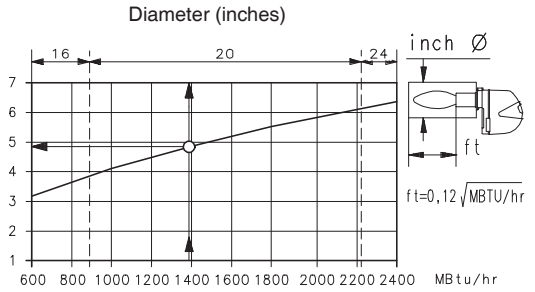

INSTALLATION

BOILER PLATE (B)

Drill the combustion chamber mounting plate as shown in (B). The position of the threaded holes can be marked using the burner head gasket supplied with the burner.

BLAST TUBE LENGTH (C)

The length of the blast tube 7) must be selected according to the indications provided by the manufacturer of the boiler, and in any case it must be greater than the thickness of the boiler door complete with its insulation. The range of lengths available, (inch), is as follows:

Blast tube 7):	RL 28/M	RL 38/M	RL 50/M
• short	$9^{15}/_{32}$"	$9^{15}/_{32}$"	$9^{15}/_{32}$"
• long	$13^{13}/_{16}$"	$13^{13}/_{16}$"	$13^{13}/_{16}$"

For boilers with front flue passes 10) or flame inversion chambers, protective insulation 8) must be inserted between the boiler refractory 9) and the blast tube 7).
This protective insulation must not compromise the extraction of the blast tube.
For boilers having a water-cooled front the insulation 8)-9)(C) is not required unless it is required by the boiler manufacturer.

SECURING THE BURNER TO THE BOILER (C)

Disassemble the blast tube 7) from the burner 4) by proceeding as follows:
- remove the screws 2) from the two slide bars 3).
- Remove the screw 1) fixing the burner 4) to the flange 5).
- Withdraw the blast tube 7) complete with flange 5) and slide bars 3).

Secure flange 5)(C) to the boiler plate inserting the supplied gasket 6). Use the 4 screws provided after having protected the thread with an antilocking product.
The burner-boiler seal must be airtight.

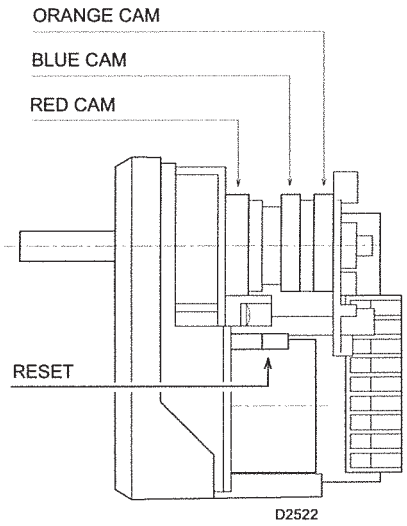

(A)

SUNTEC AL 95 C

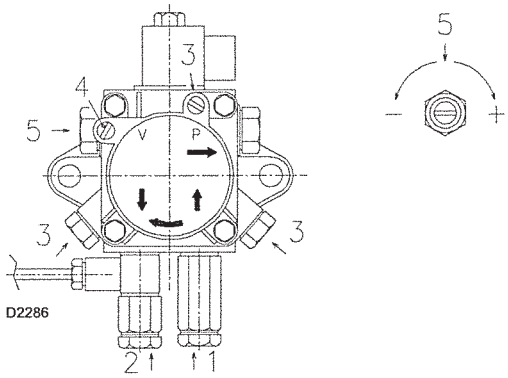

		AL 95 C
A	GPH	32
B	PSI	145 - 290
C	"Hg	13
D	cSt	2 - 12
E	°F - °C	140 - 60
F	PSI	29
G	PSI	290
H	inch	0,006

(B)

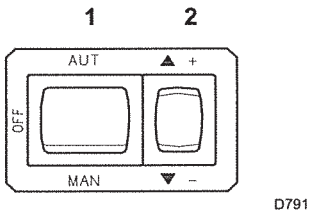

(C)

SERVOMOTOR (A)

The servomotor provides simultaneous adjustment of the air damper 11)(B) page 9 and the pressure regulator 9) by means of a double variable profile cam, 4) and 7). The servomotor rotates through 90° in 25 seconds.
Do not alter the factory setting for the cams; simply check that they are set as indicated below:

Red cam : 90°
Limits rotation toward maximum position.
Blue cam : 0°
Limits rotation toward the minimum position. When the burner is shut down the air damper must be closed: 0°.
Orange cam : 15°
Adjusts the ignition position and the MIN output.

PUMP (B)

1 - Suction	1/4" NPT
2 - Return	1/4" NPT
3 - Pressure gauge attachment	G 1/8"
4 - Vacuum gauge attachment	G 1/8"
5 - Pressure adjustment screw	

A - Min. delivery rate at 290 PSI pressure
B - Delivery pressure range
C - Max. suction pressure
D - Viscosity range
E - Max fuel oil temperature
F - Max. suction and return pressure
G - Pressure calibration in the factory
H - Filter mesh width

PUMP PRIMING

- **Before starting the burner, make sure that the tank return line is not clogged. Obstructions in the line could cause the seal located on the pump shaft to break.**
- In order for self-priming to take place, one of the screws 3)(B) of the pump must be loosened to bleed off the air contained in the suction line.
- Start the burner by closing the control circuit switch 1)(C) in the "MAN" position. As soon as the burner starts, check the direction of rotation of the fan blade, by looking through the flame inspection window 19)(A)p.4.
- The pump can be considered primed when the fuel oil starts coming out of the screw 3). Stop the burner: switch 1)(C) set to "OFF" and tighten the screw 3).

The time required for this operation depends upon the diameter and length of the suction tubing. If the pump fails to prime at the first cycle of the burner and the burner locks out, wait approx. 15 seconds, reset the burner, and then repeat the starting operation as often as required. After 5 or 6 starting operations allow 2 or 3 minutes for the transformer to cool.

Important
The priming operation is possible because the pump is already full of fuel when it leaves the factory. If the pump has been drained, fill it with fuel through the opening for the vacuum gauge prior to starting; otherwise, the pump will seize. Whenever the length of the suction piping exceeds 66 - 99 ft, the supply line must be filled using a separate pump.

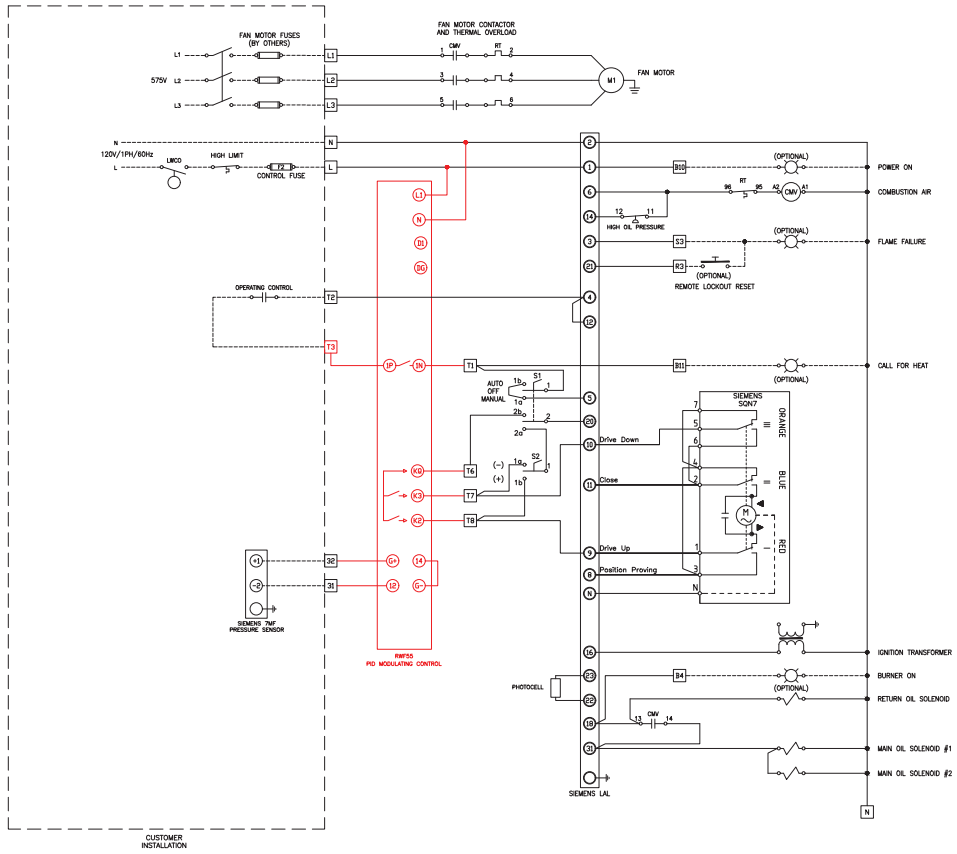

LEGEND:

- X — BURNER PANEL TERMINAL
- (X) — FLAME RELAY TERMINAL
- ——— BURNER WIRING
- - - - - FIELD WIRING

NOTE: USE COPPER CONDUCTORS ONLY

THIS DRAWING CONTAINS PROPRIETARY INFORMATION DISCLOSED BY RIELLO IN CONFIDENCE AND EXCEPT AS MAY OTHERWISE PERMIT IN WRITING, TO BE USED SOLELY FOR THE PURPOSE FOR WHICH IT HAS BEEN PROVIDED BY RIELLO

RIELLO BURNERS NORTH AMERICA
2165 MEADOWPINE BLVD
MISSISSAUGA, ON CANADA L5N 6H6
TEL: 1-800-4-RIELLO FAX: 1-866-2-RIELLO

RBNA#	RBNA-13695
BURNER	RL 50/M

REVISION HISTORY	DATE
AS BUILT	NOV 12 2025
-	-

SCC Inc.

Specifications

Document No. RWF-5510

January 5, 2017

RWF55 Control

Product Description

The RWF55 is a modulating burner/boiler control designed and engineered specifically for burner/boiler applications. The RS-485 Modbus RTU communications port allows the RWF55 control to communicate with a Building Management System (BMS) or function as an integral part of a PLC or BMS based lead/lag boiler room management system.

Sample Specification

1. The control shall have a four character, bright red LED, continuous display of process variable and a four character, bright green LED, continuous display of process setpoint. Either display shall be configurable to show analog input 1, 2, or 3, output, or thermal shock end value.
2. Active Modbus communication shall be indicated by a flashing green LED.
3. Burner enabled indication shall be indicated by a steady green LED.
4. Three-position output status shall be indicated by two orange LED's.
5. Two-stage operation status shall be indicated by an orange LED.
6. Alarm relay activation shall be indicated by a red LED.
7. Active thermal shock protection shall be indicated by an orange LED.
8. The control shall be equipped with an integral 24 VDC/30 mA power supply.
9. The control shall be configurable to accept the following process variable inputs:
    - Pt100, 2-wire or 3-wire
    - Pt1000, 2-wire or 3-wire
    - LG-Ni1000, 2-wire or 3-wire
    - B, J, K, N, R, S, or T-type thermocouples
    - 0-20 mA or 4-20 mA
    - 0-5 VDC, 1-5 VDC, or 0-10 VDC
    - 0-135 Ω

10. The control shall function as a continuously modulating control and provide one of the following selectable output signals:
    - Three-position, floating (bumping)
    - 0-20 mA or 4-20 mA
    - 0-10 VDC
11. The control shall be configurable, via a digital input, to function as either a PID control or two-stage (high/low) control.
12. The control shall provide the burner enable function.
13. The control shall function as a PID control with the following adjustable parameters:
    - Proportional band (Pb.1)
    - Integral action time (rt)
    - Derivative time (dt)
    - Dead band (db)
    - Actuator running time (tt)
14. The control action shall be selectable as either heating (reverse) or cooling (direct).
15. The control shall have a PID “Auto Tune” function that can be enabled to automatically tune the control parameters to the control characteristics of the burner/boiler.
16. The control shall be configurable for one of the following analog input signals to allow remote process setpoint control via BMS or other boiler room management systems:
    - 0-20 mA or 4-20 mA
    - 0-5 VDC, 1-5 VDC, or 0-10 VDC
    - 0-1000 Ω
17. The control shall be programmable with a second setpoint.
18. The control shall be programmable to offset setpoint 1, via digital input contact closure, to provide a dual setpoint.
19. The control shall be programmable with high and low operating limits.
20. The control shall be able to accept either of the following temperature sensing devices to reset the outdoor temperature setpoint:
    - LG-Ni1000, 2-wire
    - Pt1000, 2-wire

21. The control shall allow for time-averaged readings of outdoor temperatures, and configurable parameters for adjusting the slope of the outdoor temperature reset curve.
22. The control shall include adjustable high and low process setpoint limits to prevent the process setpoint from being programmed outside of the defined range by any of the following methods:
    - Manually using a keypad
    - Remotely via the analog process setpoint control input
    - Remotely via Modbus
23. The control shall include thermal shock protection providing configurable field parameters to adjust the slope and tolerance band.
24. Temperature process variables shall be displayed in ˚F or ˚C.
25. The process variable shall be displayed with zero, one, or two digits after the decimal point.
26. The control shall have a manual control feature. The display should alternate between "HAnd" and the output percentage when in manual control mode.
27. The control shall have an intelligent and configurable burner on-off cycle minimizing feature with the following functionality:
    - When demand on the boiler is less than low fire, the control will hold the burner at low fire.
    - When the demand on the boiler increases, the control will release the burner to modulate.
28. The control shall have a configurable alarm relay in relation to any of the analog inputs with the following features:
    - Can be programmed relative to an absolute value, or in relation to the setpoint
    - Configurable to break open or closed
29. The control shall be configurable to retransmit analog input 1, 2, or 3 to the analog output. The analog input can be scaled to produce varying analog outputs.
30. The control shall have three lockable levels of programming access:
    - Configuration menu
    - Parameter and configuration menus
    - Keyboard

31. The control front panel shall be IP66 rated.
32. The control's configuration data shall be stored in EEPROM, ensuring power failure protection.
33. The control shall utilize universal voltage inputs of 110-240 VAC, 48-63 Hz.
34. The control shall have a Modbus communications port with the following features:
    a. Standard RS-485 Modbus RTU communication protocol
    b. Selectable baud rate (4800-38400)
    c. Programmable Modbus address (1-254)
    d. Ability to apply analog inputs 2 and 3 as read only, to perform the following functions:
        i. Input 2 can be connected to a 0-1000 Ω potentiometer, on a firing rate control motor, to transmit the actual firing rate.
        ii. Input 3 can be connected to a temperature sensor to transmit outdoor temperature, boiler water temperature, or stack temperature.
    e. Remote control functions:
        i. Unfiltered, direct reading of analog inputs 1, 2, and 3
        ii. Programmable timer function for fail-safe return to local control, if communications fail
        iii. Burner shutdown capability
        iv. Manual control (floating or analog output)
        v. Control of the alarm relay
35. The control shall return to displaying the process variable and setpoint if none of the buttons on the front panel have been pressed for the duration of a programmable amount of time.
36. The control shall have associated software available to save, adjust, or upload parameter settings.

Technical Specifications

Input Voltage	110-240 VAC (+10/-15%), 48-63 Hz
Power Consumption	Max 20 VA
Operating Temperature	-20 to 50 °C, -4 to 122 °F
Enclosure Rating	IP66 keypad display, rel. humidity <95% (non-condensing)
Aux. DC Power Output	24 VDC, 30 mA
Output Relay Contact Rating	24-240 VAC, 2 A max
Analog Output Rating	0-10 VDC (500 Ω load min), 0-20 mA or 4-20 mA (500 Ω load max)
Modbus RTU Port	Configurable baud rate (4800, 9600, 19200, 38400) Address 1-254
Size	1/8 DIN, 122 mm mounting depth
Data Storage	Non-volatile EEPROM
Approvals	UL, CSA, CE

Front Display Features

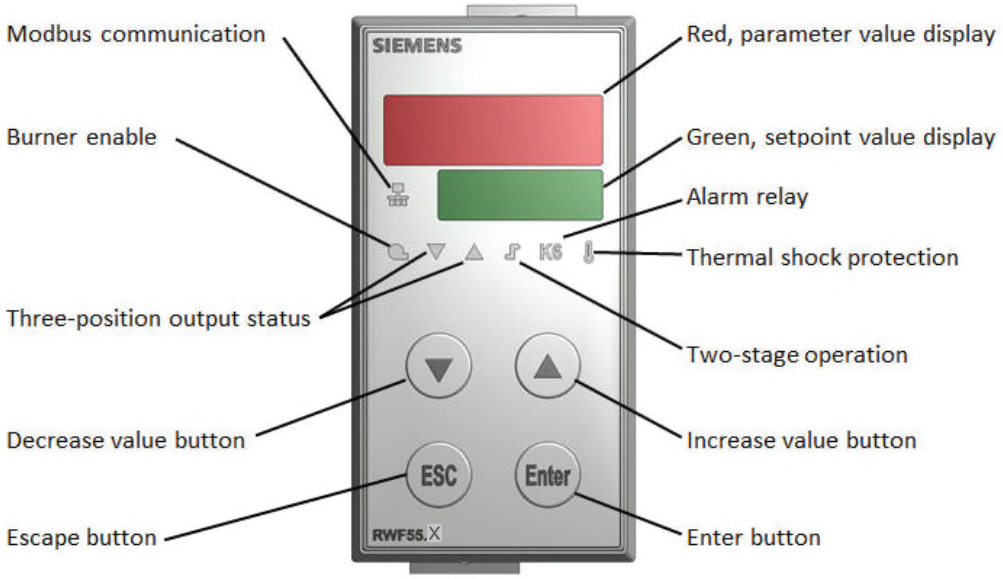

Terminals

Terminal Number	Terminal Group	Terminal Description
11	Analog Input 1	2-wire or 3-wire RTD
12		3-wire RTD Thermocouple (+) Current input signal (+)
13		Voltage input signal (+)
14		2-wire or 3-wire RTD Thermocouple (-) Signal ground (-)
21	Analog Input 2	2-wire RTD Current input signal (+)
22		Voltage input signal (+)
23		2-wire RTD Signal ground (-)
31	Analog Input 3	2-wire RTD
32		2-wire RTD
A+	Analog Output	Signal (+)
A-		Signal (-)
C1	Not Used	Not Used
C2		
C3		
C4		
R+	Modbus	RS-485 (+)
R-		RS-485 (-)
G+	24 VDC Power Supply	Power supply (+)
G-		Power supply (-)
D1	Binary Inputs	Binary input 1
D2		Binary input 2
DG		Binary input common ground
6N	Alarm Relay	NO contact
6P		Common
K3	3-Position Output	NO contact for CLOSE controlling element
KQ		Common
K2		NO contact for OPEN controlling element
1P	Burner Enable	Common
1N		NO contact
N	Main Power	Neutral
L1		Line

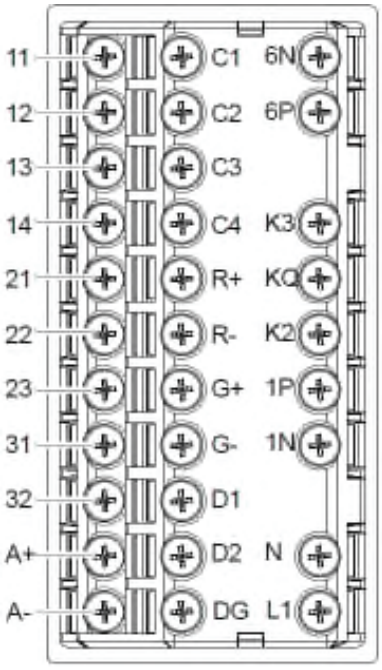

Dimensions

Dimensions in inches; millimeters in brackets

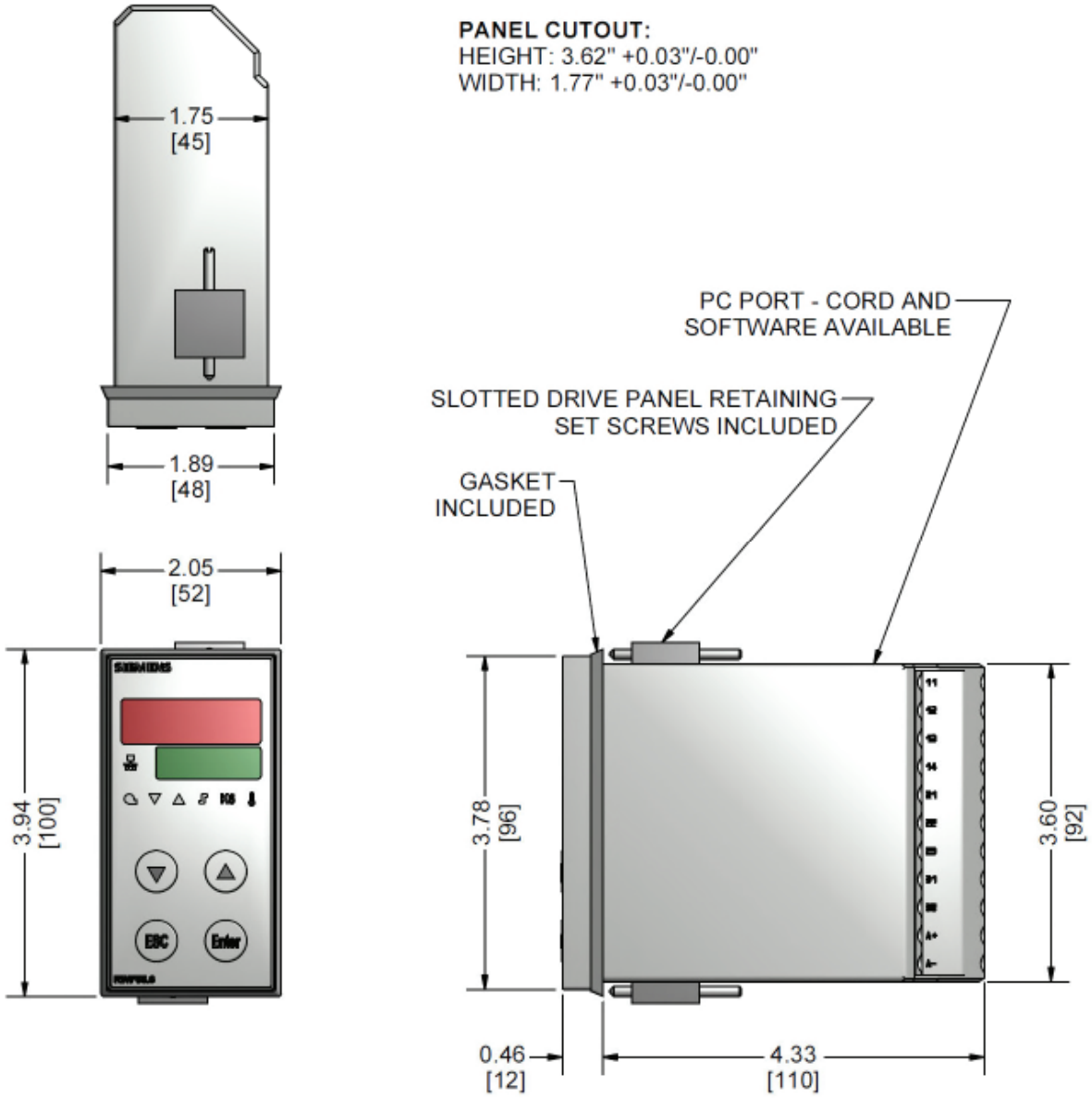

Information in this publication is based on current specifications. The company reserves the right to make changes in specifications and models as design improvements are introduced. Product or company names mentioned herein may be the trademarks of their respective owners. © 2009 SCC Inc.

Mécanique Nordique
Plumbing
Heating
Ventillation
mecanique.nordique@hotmail.com
1255 Rue J.A.Bombardier Lévis QC G7A 2P4
Tél : (418) 496-1109 Fax : (418) 496-3803

REVIEWED BY CONTRACTOR
Kudlik Construction Ltd.
NAME: Sandra Rousseau P.Eng
DATE: Jun 04, 2018

IQUALUIT WWTP UPGRADES

DRAWING FOR APPROVAL

ENGINEER: **NUNAMI STANTEC LIMITED**

DRAWING #: AD-015

Section	: 23 25 00
Article	: 2.1 ,2.3, 2.4, 2.5, 2.6, 2.7 ,2.8, 2.9
Plans	: M-602
Application	: HVAC WATER TREAMENT SYSTEMS
Brand	:
Model	:
Revised #	:
Supplyer	: SPECIFIED THECHNICAL SALES LTD
Date	: **02/06/2018**
By	: Martin Boucher

STANTEC PROJECT #: 110126045
SUBMITTAL # AD-015

This review by Stantec is for general conformance with the design concept of Stantec's design of the:
☐ Architectural ☐ Electrical
☐ Structural ☐ Other
☑ Mechanical

component(s) only and does not mean that Stantec has verified or approves the shop drawing(s). The Contractor remains solely responsible for the shop drawing(s) and this review by Stantec does not relieve the Contractor of the Contractor's responsibility for errors or omissions in the shop drawing(s) or for meeting all requirements of the contract documents. This review does not mean that Stantec approves the detailed design inherent in the shop drawing, responsibility for which shall remain with the Contractor submitting same, nor does this review mean that Stantec accepts any deviation of the shop drawing(s) from the contract documents. The Contractor is responsible for confirming all dimensions and correlating them at the job site, for all construction means, methods and techniques, and for coordination of construction work of all trades, including coordination of all shop drawings.

Stantec

☑ REVIEWED
☐ REVIEWED, AS NOTED
☐ REVISE AND RESUBMIT
☐ NOT REVIEWED

DATE 2018-06-05
BY Brendan Zrum, P.Eng

HVAC WATER TREAMENT SPEC 23 25 000

Water Technologies & Solutions
fact sheet

Ferroquest* FQ7103

neutral pH iron cleaner

description and use

- Removes rust, oil-based coating, organic debris
- Passivates steel surfaces
- Non-corrosive to base metal
- Safe in multimetal systems

description and use

Ferroquest* FQ7103 is a neutral pH cleaner which removes iron deposits, oil-based coatings, and organic debris from metal surfaces. Use of Ferroquest FQ7103 in new systems establishes system cleanliness and protection as the first step toward process efficiency and equipment longevity.

treatment and feeding requirements

Recirculate a 1% Ferroquest FQ7103 solution throughout the system for a minimum of 72 hours. After cleanout, rinse for 24 hours with fresh water, drain, and initiate system treatment. Ferroquest FQ7103 is best fed neat (undiluted) from the storage tank into the system. It can be introduced to the system by means of a chemical pump, bypass feeder or an inductor feeder.

general properties

Physical properties of Ferroquest FQ7103 are shown on the Material Safety Data Sheet, a copy of which is available upon request.

packaging information

Ferroquest FQ7103 is a liquid blend available in a variety of containers and delivery methods. Contact your SUEZ representative for details.

storage and handling

Protect from freezing. If this product is frozen during shipment or storage, slight mixing may be required to ensure homogeneity.

safety precautions

A Material Safety Data Sheet containing detailed information about this product is available upon request.

Find a contact near you by visiting www.suezwatertechnologies.com and clicking on "Contact Us."

*Trademark of SUEZ; may be registered in one or more countries.
©2017 SUEZ. All rights reserved.

Water Technologies & Solutions
fact sheet

CorrShield* MD4102

closed system corrosion inhibitor

- Excellent corrosion protection
- Low toxicity
- Highly buffered
- Easy to apply and control
- Compatible with most corrosion inhibitors

description and use

CorrShield MD4102 is a highly buffered, molybdate based corrosion inhibitor for use in multi-metal closed recirculating water systems that are subjected to air ingress contamination and/or trace acidic contaminants. This product also contains a scale inhibitor to retard the formation of objectionable deposits on high temperature heat exchange surfaces.

CorrShield MD4102 has a high buffering capacity which will maintain the pH of a closed water system in the desirable alkaline pH range, even in the presence of air ingress and/or trace acidic contaminants. Complete protection is provided against corrosion for ferrous and non-ferrous metals in both chilled and hot water heating systems.

treatment and feeding requirements

Maintain a molybdenum residual in the system as specified by your SUEZ representative. CorrShield MD4102 may be added full strength directly to the closed system by means of a by-pass feeder or chemical pump of standard construction. Inject chemical to suction side of recirculating pump or at any convenient location where good mixing is assured.

general properties

Physical properties of CorrShield MD4102 are shown on the Material safety Data Sheet (MSDS), a copy of which is available upon request.

packaging information

CorrShield MD4102 is available in a variety of containers and delivery methods. Contact your SUEZ representative for details.

storage

The product should be stored at moderate temperatures and protected from freezing. If frozen, thaw completely and mix thoroughly prior to use.

safety precautions

An MSDS containing detailed information about this product is available upon request.

Find a contact near you by visiting www.suezwatertechnologies.com and clicking on "Contact Us."

*Trademark of SUEZ; may be registered in one or more countries.
©2017 SUEZ. All rights reserved.

#214, 3750 46th Ave. SE Calgary AB T2B OL1
Tel (403) 253-2881
Fax (403) 253-7442
www.specified.ca

JOB: ***CONTACTOR:*** ***DATE:***

SYSTEM: ***TEST KIT USE:*** ***VOLUME:***

FQ7103 CLOSED SYSTEM CLEANING PROCEDURE

PART 1 - Add FQ7103 Cleaner (*Dosages:* 1L FQ7103 per every 100 L system volume)

1. Fill system with domestic water and establish circulation. Heat the system to maximum 60 degrees Celsius if possible.
2. After 2 hours of circulation, flush dirt legs until no solids are visible, while refilling to maintain the system pressure and circulation.
3. Dosage of closed loop system pipe cleaner **FQ7103** should now be added to the system via the pot feeder or pump, with the quantity determined by the system volume. Typical dosage of **1%** of total system volume is adequate for new installations.
4. Allow solution to circulate for 48 hours if cleaning is done while being heated, allow 72 hours of circulation on cold systems.
5. During the cleaning, periodically do hard short blow downs on low points in the system to remove any sediment accumulations.
6. **Take sample # 1** after the cleaner is completely mixed, before proceeding onto the next stage. Have Specified Technical Sales (STS) perform a laboratory analysis on the sample to confirm that sufficient cleaner has been added to the system. Confirmation that sufficient cleaner has been added to the system must first be received from STS prior to moving onto **PART 2**.

PART 2 – Thoroughly Flush the system to remove the cleaner

7. After the solution has adequately circulated and STS has confirmed that the recommended amount of FQ7103 is present, begin flushing. A gradual process of continuous bleed-off and make-up is recommended. Drain from the lowest available source, at the same rate as the system make-up. Observe the discharge.
8. When the effluent is clean and clear, matching the raw water quality, cease the bleed-off. Check for any remaining sediment or water loss at system drain valves.
9. **Take sample #2.** Have STS perform a laboratory test to confirm that the organo phosphonate levels within the sample show that sufficient FQ7103 cleaner has been removed from the system. (For a successful flush to have been performed < 4 ppm must be achieved). Confirmation that a satisfactory flush was completed must first be received from STS prior to moving onto **PART 3.**

PART 3 – Add Corrshield MD 4102/ Glycol to the system (*Dosages:4 liter per every 1000 liters of system volume)*

10. To provide passivation add the specified dosage of corrosion inhibitor (and glycol if required) as soon as possible, after confirming flush results. Circulate the entire system well to mix the inhibitor. Test the inhibitor concentration with the test kit provided. **Take sample #3**. Have STS perform a laboratory test to evaluate the inhibitor levels, pH, conductivity, and freeze point (if applicable). At this point STS will either provide a final written report confirming that the system is in good starting condition, or advise that insufficient inhibitor is present. If insufficient inhibitor is present an additional sample or samples will be required for laboratory analysis by STS until the recommended levels in the system are achieved. Only at the point where the inhibitor levels achieve the recommended control range criteria can a final written report be provided.
11. Install by-pass filter cartridge to remove any contaminants that remain. Monitor the filter flow and replace cartridge as necessary.
12. Before tying in a new system to an existing system take a sample of the existing system water and return it to STS, for chemical analysis for compatibility and an indication of systems chemical program integrity. **Label sample # 4 (Only if applicable)**

CUSTOMERS RESPONSIBILITIES

1. Customer shall provide STS with full details of the size of the system at the time of quotation for the job to enable an accurate and precise calculation to be made in consideration of the amount of FQ7103 cleaner that will be required to adequately clean the system.
2. Leaving raw water in the system for an extended period of time is not desirable as this may result in flash corrosion occurring in the system, so please submit each water sample to STS for testing without undue delay.

DISCLAIMER

The reports provided are based exclusively on the samples provided.

If at any time the above procedure is not followed or the customers responsibilities are not fulfilled, i.e. samples 1,2,or 3 are not received, all three samples are received at once at the conclusion of the cleaning procedure, samples are received a long time past the date that they were taken, etc; STS reserves the right to decline to issue a final written report attesting that the system is in good starting condition.

Molybdenum (Mo) Test Kit
1 drop = 2, 5, 20, or 50 ppm

STS-6213-TK

FOR BEST ACCURACY (1) ENSURE ACCURATE SAMPLE SIZE. (2) HOLD DROPPER BOTTLE VERTICALLY, NOT AT AN ANGLE.

Testing Tips:

- *Wear appropriate safety equipment.*
- *Read MSDS before use.*
- *Be sure there is adequate lighting during testing.*
- *Hold reagent bottles vertically for best results.*
- *Make sure you have an accurate sample.*

Kit Components:

STS-6213-B	*Molybdenum Buffer, 60 mL*
STS-6213-I	*Molybdenum Indicator, 60 mL*
STS-6213-T	*Molybdenum Titrating Sol., 60 mL*
SY-2005-P	*Syringe, 5 mL*
SY-2001-P	*Syringe, 1 mL*
VL-1005-V	*Vial, 10-50 mL*

EndPoint ID® Test Procedure +PLUS

1 **Select a sample size** based on the desired drop equivalency. Rinse and fill the vial with desired amount.

1 drop = 2 ppm	25 mL sample
1 drop = 5 ppm	10 mL sample
1 drop = 20 ppm	2.5 mL sample*
1 drop = 50 ppm	1.0 mL sample*

For 2.5 and 1.0 mL sample size: Use 5 mL syringe to add sample, then dilute to 10 mL with molybdenum free water.

2 **Add 1 mL of Molybdenum Buffer** (STS-6213-B) to the sample using the 1 mL syringe.



3 **Add 10 drops of Molybdenum Indicator** (STS-6213-I) and swirl to mix. The sample will turn red if molybdenum is present.



4 **Add Molybdenum Titrating Solution** (STS-6213-T) one drop at a time while swirling. Count the number of drops until the sample color changes from red to green and no further color change occurs.



5 Record your results by multiplying by the factor chosen in step 1.

# of drops x factor = ppm Molybdenum (Mo)

Note: To convert Molybdenum (Mo) to Molybdate (MoO_4), multiply by 1.7

Specified Technical Sales Ltd.

Specified Technical Sales Ltd.

LOG CHART FOR CORRSHIELD MD4102

DATE	P.P.M CORRSHIELD MD4102	pH	CONDUCTIVITY	CORRSHIELD MD4102 ADDED	EXP TANK	WATER METER	COMMENTS
	60-100 P.P.M	8.5 - 10.5	MMHOS 3600MAX	LITRES	1/2 -2/3		

Closed System Water Treatment Equipment

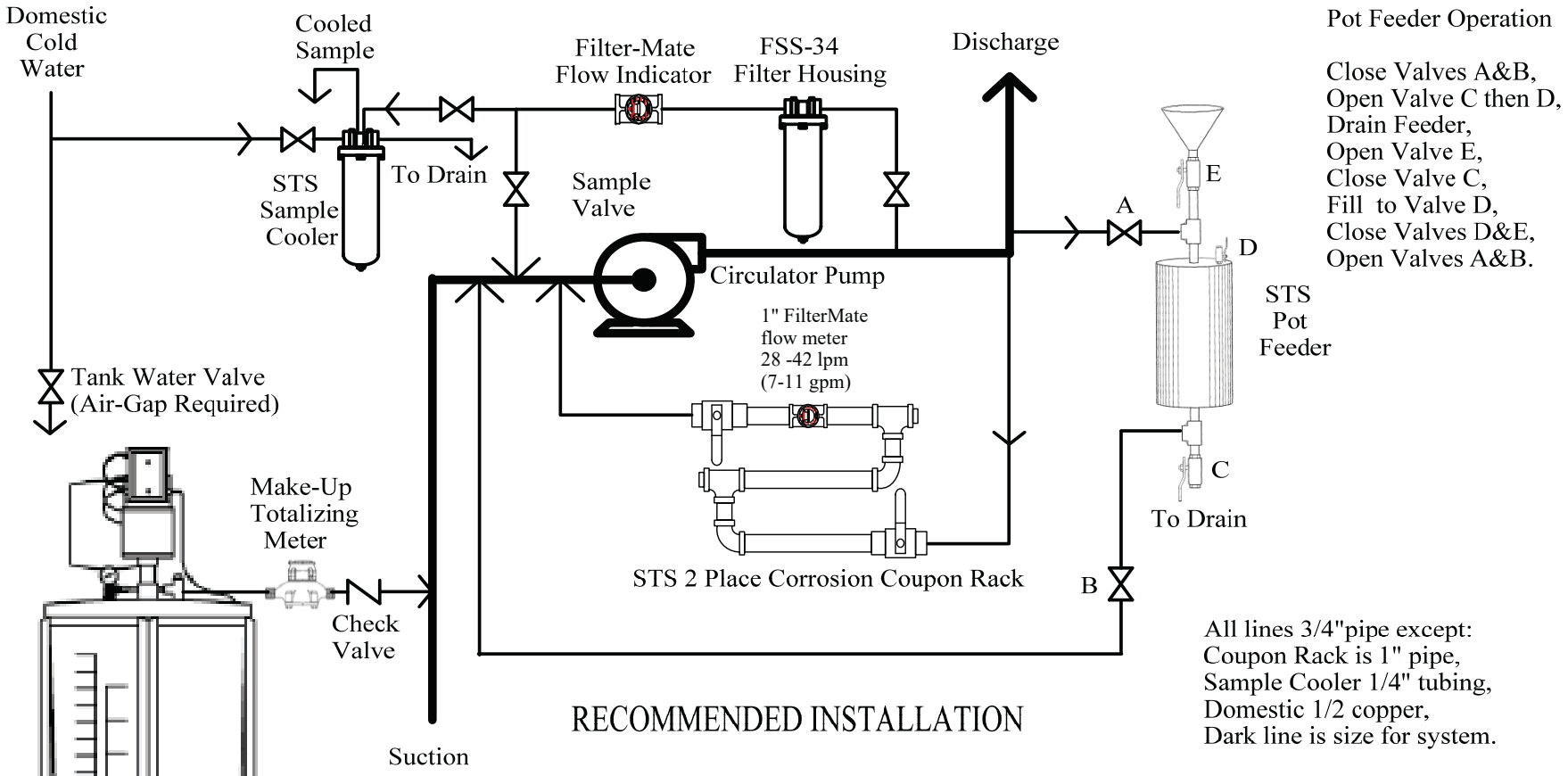

Pot Feeder Operation

Close Valves A&B,
Open Valve C then D,
Drain Feeder,
Open Valve E,
Close Valve C,
Fill to Valve D,
Close Valves D&E,
Open Valves A&B.

All lines 3/4"pipe except:
Coupon Rack is 1" pipe,
Sample Cooler 1/4" tubing,
Domestic 1/2 copper,
Dark line is size for system.

RECOMMENDED INSTALLATION

Do not install corrosion coupons until system is cleaned and passivated with the recommended corrosion inhibitor. Please consult a STS Ltd. Technical Representative to record installation date, serial number and other pertanant coupon data.

Revisions

Specified Technical Sales Ltd.

TITLE:

Closed System Water Treatment Equipment, Glycol Feed System for Glycol Systems only.

Drawn by: Christopher Wedge C.E.T. not to scale
Date: October 20/2008 Drawing no GAD19

Base Model

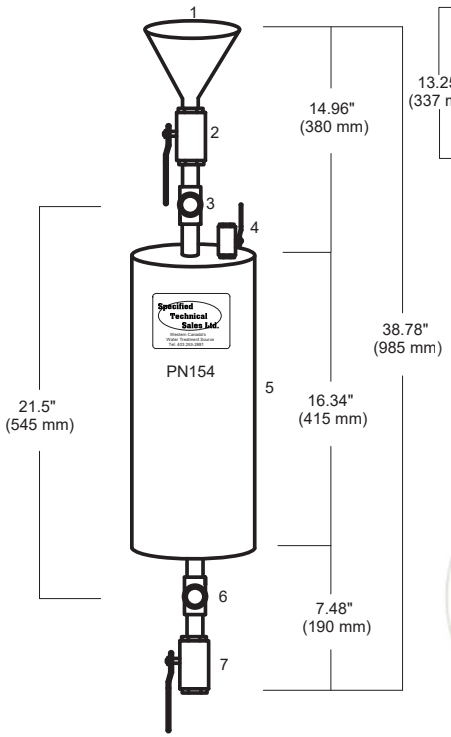

Offset Model

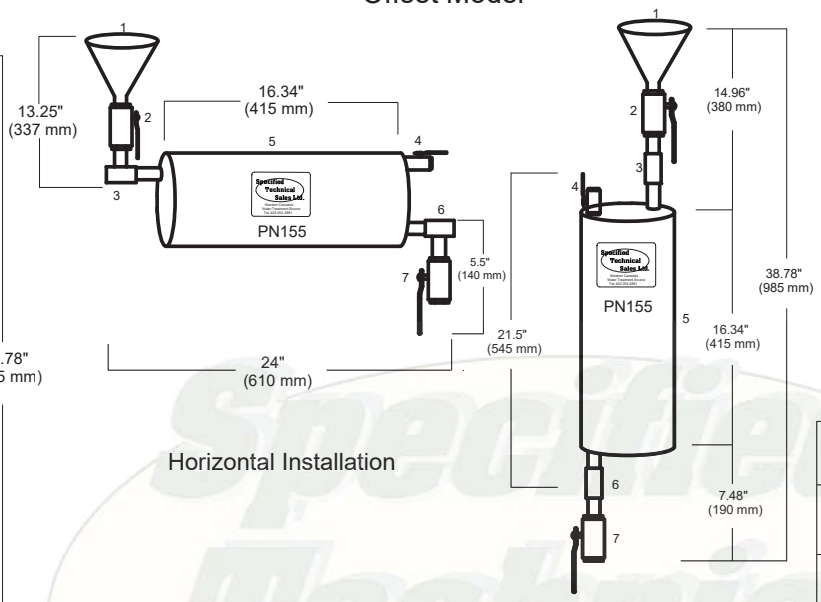

8 Litre Chemical Pot Feeder

ITEM	Description
1	Chemical Feed Funnel
2	3/4" SS ball valve w/ brass housing
3	3/4" N.P.T. outlet connection
4	1/4" air vent
5	8 L Welded Steel, M.A.W.P of 1035 kPa Vessel leak tested to 350kPa prior to assembly
6	3/4" N.P.T. inlet connection
7	3/4" SS ball valve w/ brass housing drain valve

Model Selection

- ☑ Base Model (PN154)
- ☐ Off-Set Model (PN155)

Pressure Rating

- ☑ LP - MAWP of 1035 kPa(150 psi), Vessel Leak tested to 350 kPa(50 psi)
- ☐ HP - MAWP of 2100 kPa(300 psi), Vessel Leak Tested to 700 kPa(100 psi)

Optional Accessories

- ☐ **STS-SAFETY-FLO funnel** -Keeps operator safe from spray of hot or dangerous chemicals

Revisions

Specified Technical Sales Ltd.

Title: **STS-8 Litre Chemical Pot Feeder**

Drawn by: Judith Vergara

Not To Scale

Date: July 17/14

Drawing no. **ED154LP-8**

String Wound Tinned Core Cartridges

The **AWP String Wound Tinned Core Cartridges** are a dirt/rust cartridge with a natural cotton string wound media. These string wound cartridges are ideal for point-of-use, point-of-entry or commercial/industrial applications as they can handle a range of flow rates depending on the cartridge size. The natural cotton can be used for treatment of potable liquids, vegetable oils, beverages, organic solvents, water, dilute acids, petroleum oils, and other services. The maximum temperature rating is 150°C (300°F) with a variety of micron sizes to choose from. These ratings range from 1 to 50 microns Specified Technical Sales Ltd. offers a 9 7/8", 20" and 30" cartridge length for application flexibility.

These cartridges are an economical choice for pre-filtration applications.



Revisions	Specified Technical Sales Ltd.
May, 2010	Title: **STS String Wound Filter Cartridges**
	Drawn by: Christopher Wedge C.E.T *Not To Scale*
	Date: April 26/07 Drawing no. **ED 165A**



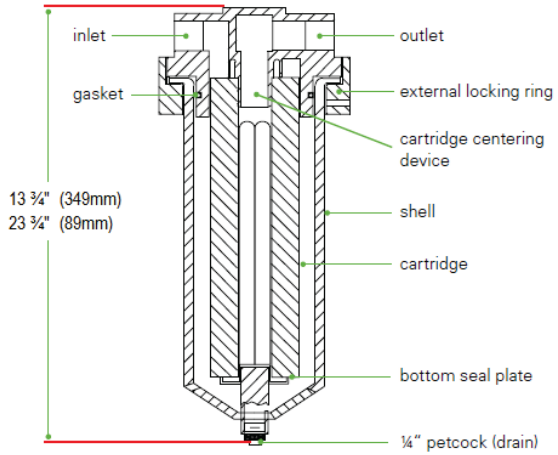

Mounting Bracket and Pin wrench Included

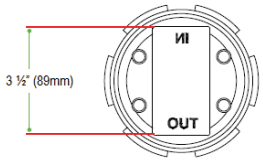



-High quality filter housings for high temperature and pressure applications. 99 Degrees Celcius, 2068 kPa (300 psi)

-The housings accept 9 7/8" or 10" cartridges.

-Flowrate: Approx. 8 gpm/cartridge (depending on cartridge selection).

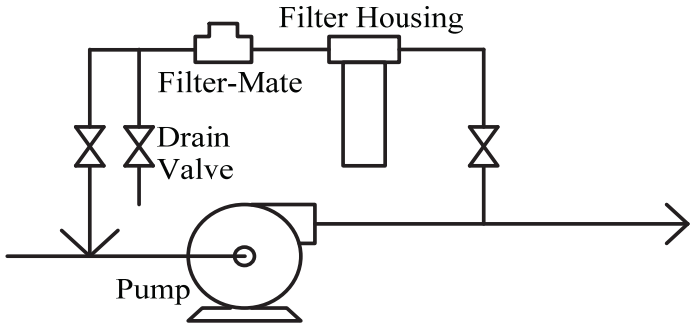

RECOMMENDED INSTALLATION

Model	Description	Connections
PN165 HMS-10A	Stainless Steel, Single Cartridge Length	3/4" FMNPT
PN165 HMS-20A	Stainless Steel, Double Cartridge Length	3/4" FMNPT

Revisions

Specified Technical Sales Ltd.

Title: **Stainless Steel Micron Filter Housing w/ Drain valve**

__ **10A**
__ **20A**

Drawn by: Christopher Wedge C.E.T *Not To Scale*

Date: Dec.23/2011 Drawing no. **ED 165HMS**

FILTER-MATE flow indicator

3/4" and 1" Model

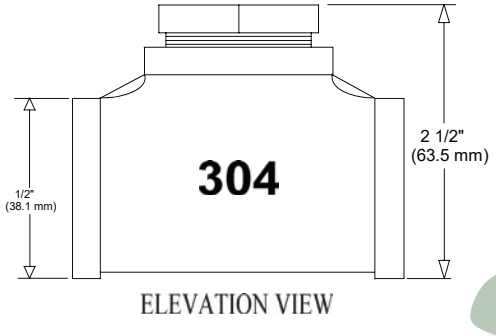

ELEVATION VIEW

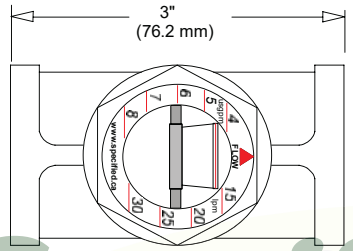

PLAN VIEW

2 inch Model

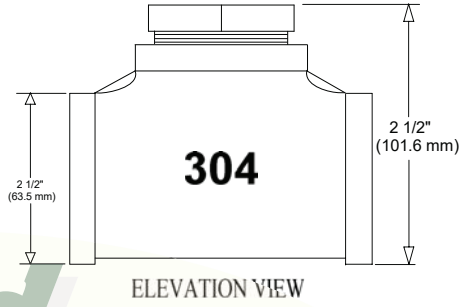

ELEVATION VIEW

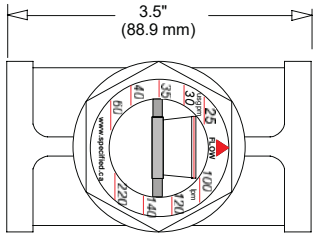

PLAN VIEW

Specified Technical Sales Ltd.

FEATURES:

- 304 Stainless Steel body and internals.
- Metric and U.S. scales.
- S.S. return spring.
- Fused glass window

BENEFITS:

- Corrosion free service.
- Maximum flow can be set to cartridge manufacturers recommendations eliminating media separation.
- Can be installed vertically or horizontally.
- No gaskets to leak.

MODEL	SIZE N.P.T	USGPM/LPM	P.S.I / kPa	Max. Temp	Body Mat.	Cap Mat.	Int. mat	Accuracy
Filter-Mate 3/4	3/4" - 20mm	4-8 / 15-30	150 / 1082	212F / 100C	304 S.S	Plated Steel	Nylon / S.S.	+ - 10%
Filter-Mate 1	1" - 25mm	7-11 / 28-42	150 / 1082	212F / 100C	304 S.S	Plated Steel	Nylon / S.S	+ - 10%
Filter-Mate 2	2" - 50mm	25-60 / 100-220	150 / 1082	212F / 100C	304 S.S	Plated Steel	Nylon / S.S.	+ - 10%

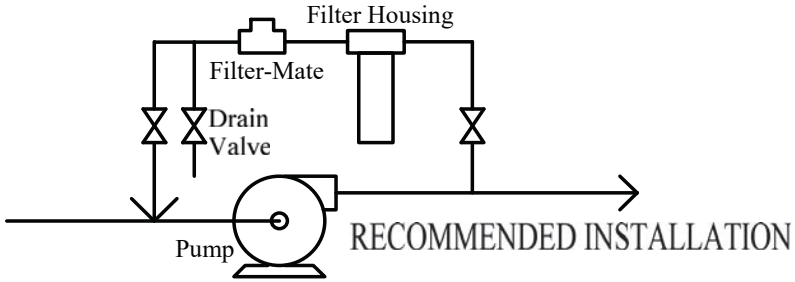

RECOMMENDED INSTALLATION

Revisions

August 2014

Specified Technical Sales Ltd.

Title: **Filter-Mate Flow Indicator**

Drawn by: Christopher Wedge C.E.T *Not To Scale*

Date: Aug 04/00

Drawing no. **ED 184**

SF100 Automatic Glycol Feed System

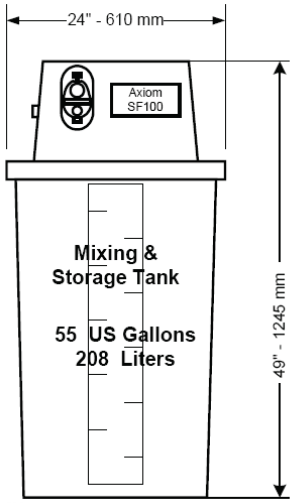

PUMP PERFORMANCE

0.09 l/s (1.4gpm) @ free flow
0.06 l/s (1.0gpm) @ 345kPa (50psi)

Pump Model

Axiom 8000 Series

Motor

115/60/1, 0.7AMPS



Specification

Hydronic system feeder shall be AXIOM INDUSTRIES LTD. Model SF100. System shall include 208 litre (55 US gallon) storage/mixing tank with cover; pump suction hose with inlet strainer; pressure pump with thermal cut-out; integral pressure switch; integral check valve; cord and plug; pre-charged accumulator tank with EPDM diaphragm; manual diverter valve for purging air and agitating contents of storage tank; pressure regulating valve adjustable (35 – 380 KPa; 5 – 55 psig) complete with pressure gauge; integral replaceable strainer; built-in check valve; union connection; 12 mm (½") x 900 mm (36") long flexible connection hose with check valve; low level pump cut-out. Pressure pump shall be capable of running dry without damage. Power supply 115/60/1 0.7 A. Unit shall be completely pre-assembled and certified by a recognized testing agency to CSA standard C22.2 No 68.

Options

☒ **RIA10-1-SAA-** Low Level Alarm Panel c/w Remote Monitoring Dry Contacts and Selectable Audible Alarm

LIMITED WARRANTY

The SF100 is warranted against defects in materials and workmanship for one year.

Certified to CAN/CSA C22.2 No. 68

ETL LISTED c US

9901055
Conforms to UL73

Revisions
Feb, 2010

Specified Technical Sales Ltd.

Title: Axiom Automatic Glycol Feed Tank, Pump, Pressure Switch, Expansion Tank, and Pressure Reducing Valve

Drawn by: Christopher Wedge C.E.T *Not To Scale*

Date: June 27/02 Drawing no. **ED147**

SAFETY DATA SHEET
FERROQUEST* FQ7103

1. Identification

Product identifier	**FERROQUEST FQ7103**
Other means of identification	None.
Version #	1.1
Prepared by	This SDS has been prepared by SUEZ Regulatory Department (1-215-355-3300).
Revision date	Dec-17-2017
Supersedes date	Aug-01-2016
Recommended use	Cleaner
Recommended restrictions	None known.

Company/undertaking identification

SUEZ Water Technologies & Solutions Canada
3239 Dundas Street West
Oakville, Ontario, L6M 4B2
T 905-465-3030

Emergency telephone

(800) 877-1940

2. Hazard(s) identification

Physical hazards	Not classified.	
Health hazards	Serious eye damage/eye irritation	Category 2
	Specific target organ toxicity, single exposure	Category 3 respiratory tract irritation

Label elements



Signal word	Warning
Hazard statement	Causes serious eye irritation. May cause respiratory irritation.
Precautionary statement	
Prevention	Avoid breathing mist or vapor. Wash thoroughly after handling. Use only outdoors or in a well-ventilated area. Wear eye protection/face protection.
Response	IF INHALED: Remove person to fresh air and keep comfortable for breathing. IF IN EYES: Rinse cautiously with water for several minutes. Remove contact lenses, if present and easy to do. Continue rinsing. Call a poison center/doctor if you feel unwell. If eye irritation persists: Get medical advice/attention.
Storage	Store in a well-ventilated place. Keep container tightly closed. Store locked up.
Disposal	Dispose of contents/container in accordance with local/regional/national/international regulations.
Other hazards	None known.
Supplemental information	None.

3. Composition/information on ingredients

Mixtures

Components	CAS #	Percent (wt/wt)
PHOSPHATE ESTER POTASSIUM SALT	66057-30-5	2.5 - 10
Sodium sulphite	7757-83-7	2.5 - 10

Composition comments Information for specific product ingredients as required by the WHMIS Regulations is listed. Refer to additional sections of this SDS for our assessment of the potential hazards of this formulation.

4. First-aid measures

Inhalation Remove victim to fresh air and keep at rest in a position comfortable for breathing. Call a POISON CENTER or doctor/physician if you feel unwell.

Skin contact Wash off with soap and water. Get medical attention if irritation develops and persists.

Eye contact Immediately flush eyes with plenty of water for at least 15 minutes. Remove contact lenses, if present and easy to do. Continue rinsing. If eye irritation persists: Get medical advice/attention.

Ingestion Rinse mouth. Get medical attention if symptoms occur.

Most important symptoms/effects, acute and delayed Severe eye irritation. Symptoms may include stinging, tearing, redness, swelling, and blurred vision. May cause respiratory irritation.

Indication of immediate medical attention and special treatment needed Provide general supportive measures and treat symptomatically. Keep victim under observation. Symptoms may be delayed.

General information If you feel unwell, seek medical advice (show the label where possible). Ensure that medical personnel are aware of the material(s) involved, and take precautions to protect themselves.

5. Fire-fighting measures

Suitable extinguishing media Water fog. Foam. Dry chemical powder. Carbon dioxide (CO2).

Unsuitable extinguishing media Do not use water jet as an extinguisher, as this will spread the fire.

Specific hazards arising from the chemical During fire, gases hazardous to health may be formed.

Special protective equipment and precautions for firefighters Wear full protective clothing, including helmet, self-contained positive pressure or pressure demand breathing apparatus, protective clothing and face mask.

Fire fighting equipment/instructions In case of fire and/or explosion do not breathe fumes. Use standard firefighting procedures and consider the hazards of other involved materials. Move containers from fire area if you can do so without risk. Cool containers / tanks with water spray.

Specific methods Use standard firefighting procedures and consider the hazards of other involved materials.

General fire hazards No unusual fire or explosion hazards noted.

6. Accidental release measures

Personal precautions, protective equipment and emergency procedures Keep unnecessary personnel away. Keep people away from and upwind of spill/leak. Wear appropriate protective equipment and clothing during clean-up. Avoid breathing mist or vapor. Do not touch damaged containers or spilled material unless wearing appropriate protective clothing. Ensure adequate ventilation. Local authorities should be advised if significant spillages cannot be contained. For personal protection, see section 8 of the SDS.

Methods and materials for containment and cleaning up Large Spills: Stop the flow of material, if this is without risk. Dike the spilled material, where this is possible. Absorb in vermiculite, dry sand or earth and place into containers. Following product recovery, flush area with water.

Small Spills: Wipe up with absorbent material (e.g. cloth, fleece). Clean surface thoroughly to remove residual contamination.

Never return spills to original containers for re-use. For waste disposal, see section 13 of the SDS.

Environmental precautions Avoid discharge into drains, water courses or onto the ground.

7. Handling and storage

Precautions for safe handling Avoid breathing mist or vapor. Avoid contact with eyes. Provide adequate ventilation. Wear appropriate personal protective equipment. Observe good industrial hygiene practices.

Conditions for safe storage, including any incompatibilities Store locked up. Store in original tightly closed container. Store away from incompatible materials (see Section 10 of the SDS). Protect from freezing. If frozen, thaw and mix completely prior to use.

8. Exposure controls/personal protection

Occupational exposure limits	No exposure limits noted for ingredient(s).
Biological limit values	No biological exposure limits noted for the ingredient(s).
Appropriate engineering controls	Good general ventilation (typically 10 air changes per hour) should be used. Ventilation rates should be matched to conditions. If applicable, use process enclosures, local exhaust ventilation, or other engineering controls to maintain airborne levels below recommended exposure limits. If exposure limits have not been established, maintain airborne levels to an acceptable level. Provide eyewash station. Good general ventilation should be used. Ventilation rates should be matched to conditions. If applicable, use process enclosures, local exhaust ventilation, or other engineering controls to maintain airborne levels below recommended exposure limits. If exposure limits have not been established, maintain airborne levels to an acceptable level.

Individual protection measures, such as personal protective equipment

Eye/face protection	Wear safety glasses with side shields (or goggles).
Skin protection	
Hand protection	Wear appropriate chemical resistant gloves. The choice of an appropriate glove does not only depend on its material but also on other quality features and is different from one producer to the other. Suitable gloves can be recommended by the glove supplier. Glove selection must take into account any solvents and other hazards present.
Other	Wear suitable protective clothing.
Respiratory protection	If engineering controls do not maintain airborne concentrations below recommended exposure limits (where applicable) or to an acceptable level (in countries where exposure limits have not been established), an approved respirator must be worn.
Thermal hazards	Wear appropriate thermal protective clothing, when necessary.
General hygiene considerations	Always observe good personal hygiene measures, such as washing after handling the material and before eating, drinking, and/or smoking. Routinely wash work clothing and protective equipment to remove contaminants.

9. Physical and chemical properties

Appearance	Liquid
Color	Colorless to light yellow
Odor	Slight
pH (concentrated product)	5.9 Neat
Initial boiling point and boiling range	216 °F (102 °C)
Flash point	> 199 °F (> 93 °C) P-M(CC)
Evaporation rate	Slower than Ether
Flammability (solid, gas)	Not applicable.
Upper/lower flammability or explosive limits	
Explosive limit - lower (%)	Not available.
Explosive limit - upper (%)	Not available.
Vapor pressure	18 mmHg
Vapor pressure temp.	70 °F (21 °C)
Vapor density	< 1
Relative density	1.12
Relative density temperature	70 °F (21 °C)
Solubility(ies)	
Solubility (water)	100 %
Viscosity	20 mPa.s
Viscosity temperature	70 °F (21 °C)
Other information	
Explosive properties	Not explosive.
Oxidizing properties	Not oxidizing.
Pour point	31 °F (-1 °C)
Specific gravity	1.122
VOC	0 % CALCULATED

10. Stability and reactivity

Reactivity	The product is stable and non-reactive under normal conditions of use, storage and transport.
Chemical stability	Material is stable under normal conditions.
Possibility of hazardous reactions	Hazardous polymerization does not occur.
Conditions to avoid	Avoid temperatures exceeding the flash point. Contact with incompatible materials.
Incompatible materials	Strong oxidizing agents.
Hazardous decomposition products	Oxides of carbon, nitrogen, phosphorus, and sulphur evolved in fire.

11. Toxicological information

Information on likely routes of exposure

Inhalation	May cause irritation to the respiratory system.
Skin contact	Prolonged or repeated contact may cause irritation.
Eye contact	Causes serious eye irritation.
Ingestion	Expected to be a low ingestion hazard.
Symptoms related to the physical, chemical and toxicological characteristics	Severe eye irritation. Symptoms may include stinging, tearing, redness, swelling, and blurred vision. May cause respiratory irritation.

Information on toxicological effects

Acute toxicity May cause respiratory irritation.

Product	Species	Test Results
FERROQUEST FQ7103 (CAS Mixture)		
Acute		
Dermal		
LD50	Rabbit	> 5000 mg/kg, (Calculated according to GHS additivity formula)
Oral		
LD50	Rat	> 5000 mg/kg, (Calculated according to GHS additivity formula)

Components	Species	Test Results
Sodium sulphite (CAS 7757-83-7)		
Acute		
Dermal		
LD50	Rabbit	> 2000 mg/kg
Inhalation		
LC50	Rat	> 5.5 mg/l, 4 Hour
Oral		
LD50	Rat	2610 mg/kg

* Estimates for product may be based on additional component data not shown.

Skin corrosion/irritation	Prolonged skin contact may cause temporary irritation.
Serious eye damage/eye irritation	Causes serious eye irritation.

Respiratory or skin sensitization

Respiratory sensitization	This product is not expected to cause respiratory sensitization.
Skin sensitization	This product is not expected to cause skin sensitization.
Germ cell mutagenicity	No data available to indicate product or any components present at greater than 0.1% are mutagenic or genotoxic.
Carcinogenicity	Not classified.

IARC Monographs. Overall Evaluation of Carcinogenicity

Sodium sulphite (CAS 7757-83-7) 3 Not classifiable as to carcinogenicity to humans.

Reproductive toxicity This product is not expected to cause reproductive or developmental effects.

Specific target organ toxicity - single exposure	May cause respiratory irritation.
Specific target organ toxicity - repeated exposure	Not classified.
Aspiration hazard	Based on available data, the classification criteria are not met.

12. Ecological information

Ecotoxicity

Product		Species	Test Results
FERROQUEST FQ7103 (CAS Mixture)			
	0% Mortality	Fathead Minnow	2000 mg/L, Static Renewal Bioassay, 96 hour
Aquatic			
Crustacea	0% Mortality	Daphnia magna	845 mg/L, Static Renewal Bioassay, 48 hour
	30% Mortality	Daphnia magna	1300 mg/L, Static Renewal Bioassay, 48 hour

Bioaccumulative potential	No data available.
Mobility in soil	No data available.
Other adverse effects	Not available.

Persistence and degradability

No data is available on the degradability of this product.

13. Disposal considerations

Disposal instructions	Collect and reclaim or dispose in sealed containers at licensed waste disposal site. Dispose of contents/container in accordance with local/regional/national/international regulations.
Local disposal regulations	Dispose in accordance with all applicable regulations.
Waste from residues / unused products	Dispose of in accordance with local regulations. Empty containers or liners may retain some product residues. This material and its container must be disposed of in a safe manner (see: Disposal instructions).
Contaminated packaging	Since emptied containers may retain product residue, follow label warnings even after container is emptied. Empty containers should be taken to an approved waste handling site for recycling or disposal.

14. Transport information

TDG

Not regulated as dangerous goods.

The goods described above have been classified using a combination of testing, technical data, calculations and manufacturer knowledge in accordance with Part 2, Classification. TDG Classification is valid for road or rail transport only. For shipment by air or water, refer to IATA or IMDG regulations.

DOT

Not regulated as a dangerous good.

Some containers may be exempt from Dangerous Goods/Hazmat Transport Regulations, please check BOL for exact container classification.

IMDG

Not regulated as dangerous goods.

IATA

Not regulated as dangerous goods.

15. Regulatory information

Canadian regulations

Controlled Drugs and Substances Act

Not regulated.

Export Control List (CEPA 1999, Schedule 3)

Not listed.

Greenhouse Gases

Not listed.

SAFETY DATA SHEET
CORRSHIELD* MD4102

1. Identification

Product identifier	**CORRSHIELD MD4102**
Other means of identification	None.
Version #	2.1
Prepared by	This SDS has been prepared by SUEZ Regulatory Department (1-215-355-3300).
Revision date	Dec-17-2017
Supersedes date	Oct-23-2017
Recommended use	Water-based corrosion inhibitor
Recommended restrictions	None known.

Company/undertaking identification

SUEZ Water Technologies & Solutions Canada
3239 Dundas Street West
Oakville, Ontario, L6M 4B2
T 905-465-3030

Emergency telephone

(800) 877-1940

2. Hazard(s) identification

Physical hazards	Not classified.	
Health hazards	Skin corrosion/irritation	Category 1B
	Serious eye damage/eye irritation	Category 1

Label elements



Signal word	Danger
Hazard statement	Causes severe skin burns and eye damage. Causes serious eye damage.
Precautionary statement	
Prevention	Do not breathe mist or vapor. Wash thoroughly after handling. Wear eye protection/face protection.
Response	IF SWALLOWED: Rinse mouth. Do NOT induce vomiting. IF ON SKIN (or hair): Take off immediately all contaminated clothing. Rinse skin with water. IF INHALED: Remove person to fresh air and keep comfortable for breathing. IF IN EYES: Rinse cautiously with water for several minutes. Remove contact lenses, if present and easy to do. Continue rinsing. Immediately call a POISON CENTER/doctor. Wash contaminated clothing before reuse.
Storage	Store locked up.
Disposal	Dispose of contents/container in accordance with local/regional/national/international regulations.
Other hazards	None known.
Supplemental information	None.

3. Composition/information on ingredients

Mixtures

Components	CAS #	Percent (wt/wt)
Boric Acid (hbo2), Sodium Salt, Dihydrate	16800-11-6	2.5 - 10
Morpholine	110-91-8	2.5 - 10

Composition comments Information for specific product ingredients as required by the WHMIS Regulations is listed. Refer to additional sections of this SDS for our assessment of the potential hazards of this formulation.

4. First-aid measures

Inhalation Move to fresh air. Call a physician if symptoms develop or persist.

Skin contact Take off immediately all contaminated clothing. Rinse skin with water/shower. Call a physician or poison control center immediately. Chemical burns must be treated by a physician. Wash contaminated clothing before reuse.

Eye contact Immediately flush eyes with plenty of water for at least 15 minutes. Remove contact lenses, if present and easy to do. Continue rinsing. Call a physician or poison control center immediately.

Ingestion Call a physician or poison control center immediately. Rinse mouth. Do not induce vomiting. If vomiting occurs, keep head low so that stomach content doesn't get into the lungs.

Most important symptoms/effects, acute and delayed Burning pain and severe corrosive skin damage. Causes serious eye damage. Symptoms may include stinging, tearing, redness, swelling, and blurred vision. Permanent eye damage including blindness could result.

Indication of immediate medical attention and special treatment needed Provide general supportive measures and treat symptomatically. Chemical burns: Flush with water immediately. While flushing, remove clothes which do not adhere to affected area. Call an ambulance. Continue flushing during transport to hospital. Keep victim under observation. Symptoms may be delayed.

General information Ensure that medical personnel are aware of the material(s) involved, and take precautions to protect themselves.

5. Fire-fighting measures

Suitable extinguishing media Water fog. Foam. Dry chemical powder. Carbon dioxide (CO2).

Unsuitable extinguishing media Do not use water jet as an extinguisher, as this will spread the fire.

Specific hazards arising from the chemical During fire, gases hazardous to health may be formed.

Special protective equipment and precautions for firefighters Wear full protective clothing, including helmet, self-contained positive pressure or pressure demand breathing apparatus, protective clothing and face mask.

Fire fighting equipment/instructions In case of fire and/or explosion do not breathe fumes. Use standard firefighting procedures and consider the hazards of other involved materials. Move containers from fire area if you can do so without risk. Cool containers / tanks with water spray.

Specific methods Use standard firefighting procedures and consider the hazards of other involved materials.

General fire hazards No unusual fire or explosion hazards noted.

6. Accidental release measures

Personal precautions, protective equipment and emergency procedures Keep unnecessary personnel away. Keep people away from and upwind of spill/leak. Wear appropriate protective equipment and clothing during clean-up. Do not breathe mist or vapor. Do not touch damaged containers or spilled material unless wearing appropriate protective clothing. Ensure adequate ventilation. Local authorities should be advised if significant spillages cannot be contained. For personal protection, see section 8 of the SDS.

Methods and materials for containment and cleaning up Large Spills: Stop the flow of material, if this is without risk. Dike the spilled material, where this is possible. Absorb in vermiculite, dry sand or earth and place into containers. Following product recovery, flush area with water.

Small Spills: Wipe up with absorbent material (e.g. cloth, fleece). Clean surface thoroughly to remove residual contamination.

Never return spills to original containers for re-use. For waste disposal, see section 13 of the SDS.

Environmental precautions Avoid discharge into drains, water courses or onto the ground.

7. Handling and storage

Precautions for safe handling Do not breathe mist or vapor. Do not get in eyes, on skin, or on clothing. Avoid prolonged exposure. Provide adequate ventilation. Wear appropriate personal protective equipment. Observe good industrial hygiene practices.

Conditions for safe storage, including any incompatibilities Store locked up. Store in original tightly closed container. Store away from incompatible materials (see Section 10 of the SDS).

8. Exposure controls/personal protection

Occupational exposure limits

US. ACGIH Threshold Limit Values

Components	Type	Value
Morpholine (CAS 110-91-8)	TWA	20 ppm

Canada. Alberta OELs (Occupational Health & Safety Code, Schedule 1, Table 2)

Components	Type	Value
Morpholine (CAS 110-91-8)	TWA	71 mg/m3 20 ppm

Canada. British Columbia OELs. (Occupational Exposure Limits for Chemical Substances, Occupational Health and Safety Regulation 296/97, as amended)

Components	Type	Value
Morpholine (CAS 110-91-8)	TWA	20 ppm

Canada. Manitoba OELs (Reg. 217/2006, The Workplace Safety And Health Act)

Components	Type	Value
Morpholine (CAS 110-91-8)	TWA	20 ppm

Canada. Ontario OELs. (Control of Exposure to Biological or Chemical Agents)

Components	Type	Value
Morpholine (CAS 110-91-8)	TWA	20 ppm

Canada. Quebec OELs. (Ministry of Labor - Regulation Respecting the Quality of the Work Environment)

Components	Type	Value
Morpholine (CAS 110-91-8)	TWA	71 mg/m3 20 ppm

Biological limit values No biological exposure limits noted for the ingredient(s).

Exposure guidelines

Canada - Alberta OELs: Skin designation

Morpholine (CAS 110-91-8) Can be absorbed through the skin.

Canada - British Columbia OELs: Skin designation

Morpholine (CAS 110-91-8) Can be absorbed through the skin.

Canada - Manitoba OELs: Skin designation

Morpholine (CAS 110-91-8) Can be absorbed through the skin.

Canada - Ontario OELs: Skin designation

Morpholine (CAS 110-91-8) Can be absorbed through the skin.

Canada - Quebec OELs: Skin designation

Morpholine (CAS 110-91-8) Can be absorbed through the skin.

Canada - Saskatchewan OELs: Skin designation

Morpholine (CAS 110-91-8) Can be absorbed through the skin.

US ACGIH Threshold Limit Values: Skin designation

Morpholine (CAS 110-91-8) Can be absorbed through the skin.

Appropriate engineering controls Good general ventilation (typically 10 air changes per hour) should be used. Ventilation rates should be matched to conditions. If applicable, use process enclosures, local exhaust ventilation, or other engineering controls to maintain airborne levels below recommended exposure limits. If exposure limits have not been established, maintain airborne levels to an acceptable level. Eye wash facilities and emergency shower must be available when handling this product. Good general ventilation should be used. Ventilation rates should be matched to conditions. If applicable, use process enclosures, local exhaust ventilation, or other engineering controls to maintain airborne levels below recommended exposure limits. If exposure limits have not been established, maintain airborne levels to an acceptable level.

Individual protection measures, such as personal protective equipment

Eye/face protection Splash proof chemical goggles. Face shield.

Skin protection

Hand protection Wear appropriate chemical resistant gloves. The choice of an appropriate glove does not only depend on its material but also on other quality features and is different from one producer to the other. Glove selection must take into account any solvents and other hazards present.

Other Wear appropriate chemical resistant clothing.

Respiratory protection	If engineering controls do not maintain airborne concentrations below recommended exposure limits (where applicable) or to an acceptable level (in countries where exposure limits have not been established), an approved respirator must be worn.
Thermal hazards	Wear appropriate thermal protective clothing, when necessary.
General hygiene considerations	Always observe good personal hygiene measures, such as washing after handling the material and before eating, drinking, and/or smoking. Routinely wash work clothing and protective equipment to remove contaminants.

9. Physical and chemical properties

Appearance	Liquid
Color	Colorless to light yellow
Odor	Slight
Odor threshold	Not available.
pH (concentrated product)	10.5
Melting point/freezing point	25 °F (-4 °C)
Initial boiling point and boiling range	212 °F (100 °C)
Flash point	> 200 °F (> 93 °C) P-M(CC)
Evaporation rate	< 1 (Ether = 1)
Flammability (solid, gas)	Not applicable.
Upper/lower flammability or explosive limits	
Flammability limit - lower (%)	Not available.
Flammability limit - upper (%)	Not available.
Explosive limit - lower (%)	Not available.
Explosive limit - upper (%)	Not available.
Vapor pressure	18 mm Hg
Vapor pressure temp.	70 °F (21 °C)
Vapor density	< 1 (Air = 1)
Relative density	1.09
Relative density temperature	70 °F (21 °C)
Solubility(ies)	
Solubility (water)	100 %
Partition coefficient (n-octanol/water)	Not available.
Auto-ignition temperature	Not available.
Decomposition temperature	Not available.
Viscosity	10 cps
Viscosity temperature	70 °F (21 °C)
Other information	
Explosive properties	Not explosive.
Oxidizing properties	Not oxidizing.
Pour point	30 °F (-1 °C)
Specific gravity	1.091
VOC	5 % (Calculated)

10. Stability and reactivity

Reactivity	The product is stable and non-reactive under normal conditions of use, storage and transport.
Chemical stability	Material is stable under normal conditions.
Possibility of hazardous reactions	Hazardous polymerization does not occur.
Conditions to avoid	Avoid temperatures exceeding the flash point. Contact with incompatible materials.
Incompatible materials	Strong acids. Strong oxidizing agents.

Hazardous decomposition products	Elemental oxides.

11. Toxicological information

Information on likely routes of exposure

Inhalation	May cause irritation to the respiratory system. Prolonged inhalation may be harmful.
Skin contact	Causes severe skin burns.
Eye contact	Causes serious eye damage.
Ingestion	Causes digestive tract burns.
Symptoms related to the physical, chemical and toxicological characteristics	Burning pain and severe corrosive skin damage. Causes serious eye damage. Symptoms may include stinging, tearing, redness, swelling, and blurred vision. Permanent eye damage including blindness could result.

Information on toxicological effects

Acute toxicity

Product	Species	Test Results
CORRSHIELD MD4102 (CAS Mixture)		
Acute		
Dermal		
LD50	Rabbit	> 5000 mg/kg, (Estimated value)
Oral		
LD50	Rat	> 5000 mg/kg, (Estimated value)

Components	Species	Test Results
Morpholine (CAS 110-91-8)		
Acute		
Dermal		
LD50	Rabbit	504 mg/kg
Inhalation		
LC50	Rat	8 mg/l, 4 Hour
Oral		
LD50	Rat	1680 mg/kg

* Estimates for product may be based on additional component data not shown.

Skin corrosion/irritation	Causes severe skin burns and eye damage.
Serious eye damage/eye irritation	Causes serious eye damage.
Respiratory or skin sensitization	
Respiratory sensitization	This product is not expected to cause respiratory sensitization.
Skin sensitization	This product is not expected to cause skin sensitization.
Germ cell mutagenicity	No data available to indicate product or any components present at greater than 0.1% are mutagenic or genotoxic.
Carcinogenicity	Not classified.

ACGIH Carcinogens

Morpholine (CAS 110-91-8)	A4 Not classifiable as a human carcinogen.

Canada - Manitoba OELs: carcinogenicity

Morpholine (CAS 110-91-8)	Not classifiable as a human carcinogen.

IARC Monographs. Overall Evaluation of Carcinogenicity

Morpholine (CAS 110-91-8)	3 Not classifiable as to carcinogenicity to humans.

Reproductive toxicity	This product is not expected to cause reproductive or developmental effects.
Specific target organ toxicity - single exposure	Not classified.
Specific target organ toxicity - repeated exposure	Not classified.
Aspiration hazard	Based on available data, the classification criteria are not met.
Chronic effects	Prolonged inhalation may be harmful.

12. Ecological information

Ecotoxicity No ecotoxicity data noted for the ingredient(s).

Bioaccumulative potential

Partition coefficient n-octanol / water (log Kow)

Morpholine	-0.86

Mobility in soil No data available.

Other adverse effects Not available.

Persistence and degradability

13. Disposal considerations

Disposal instructions Collect and reclaim or dispose in sealed containers at licensed waste disposal site. Dispose of contents/container in accordance with local/regional/national/international regulations.

Local disposal regulations Dispose in accordance with all applicable regulations.

Waste from residues / unused products Dispose of in accordance with local regulations. Empty containers or liners may retain some product residues. This material and its container must be disposed of in a safe manner (see: Disposal instructions).

Contaminated packaging Since emptied containers may retain product residue, follow label warnings even after container is emptied. Empty containers should be taken to an approved waste handling site for recycling or disposal.

14. Transport information

TDG

Not regulated as dangerous goods.

The goods described above have been classified using a combination of testing, technical data, calculations and manufacturer knowledge in accordance with Part 2, Classification. TDG Classification is valid for road or rail transport only. For shipment by air or water, refer to IATA or IMDG regulations.

DOT

Not regulated as a dangerous good.

Some containers may be exempt from Dangerous Goods/Hazmat Transport Regulations, please check BOL for exact container classification.

IMDG

Not regulated as dangerous goods.

IATA

Not regulated as dangerous goods.

15. Regulatory information

Canadian regulations This product has been classified in accordance with the hazard criteria of the HPR and the SDS contains all the information required by the HPR.

Controlled Drugs and Substances Act

Not regulated.

Export Control List (CEPA 1999, Schedule 3)

Not listed.

Greenhouse Gases

Not listed.

Precursor Control Regulations

Not regulated.

Inventory status

Country(s) or region	Inventory name	On inventory (yes/no)*
Canada	Domestic Substances List (DSL)	No
Canada	Non-Domestic Substances List (NDSL)	No
United States & Puerto Rico	Toxic Substances Control Act (TSCA) Inventory	No

*A "Yes" indicates that all components of this product comply with the inventory requirements administered by the governing country(s)
A "No" indicates that one or more components of the product are not listed or exempt from listing on the inventory administered by the governing country(s).

16. Other information

Issue date Aug-11-2016

Revision date	Dec-17-2017
Version #	2.1
List of abbreviations	CAS: Chemical Abstract Service Registration Number TSRN indicates a Trade Secret Registry Number is used in place of the CAS number. ACGIH: American Conference of Governmental Industrial Hygienists NOEL: No Observed Effect Level STEL: Short Term Exposure Limit LC50: Lethal Concentration, 50% LD50: Lethal Dose, 50% TWA: Time Weighted Average BOD: Biochemical Oxygen Demand COD: Chemical Oxygen Demand TOC: Total Organic Carbon IATA: International Air Transport Association IMDG: International Maritime Dangerous Goods Code TLV: Threshold Limit Value
References:	No data available
Disclaimer	The information provided in this Safety Data Sheet is correct to the best of our knowledge, information and belief at the date of its publication. The information given is designed only as a guidance for safe handling, use, processing, storage, transportation, disposal and release and is not to be considered a warranty or quality specification. The information relates only to the specific material designated and may not be valid for such material used in combination with any other materials or in any process, unless specified in the text.

* Trademark of SUEZ. May be registered in one or more countries.

Mécanique Nordique
Plumbing
Heating
Ventillation
mecanique.nordique@hotmail.com
1255 Rue J.A.Bombardier Lévis QC G7A 2P4
Tél : (418) 496-1109 Fax : (418) 496-3803

REVIEWED BY CONTRACTOR
Kudlik Construction Ltd.
NAME: Sandra Rousseau P.Eng
DATE: Jun 18, 2018

IQUALUIT WWTP UPGRADES

DRAWING FOR APPROVAL

ENGINEER: **NUNAMI STANTEC LIMITED**

DRAWING #: AD-016

Section	: 22 10 10
Article	: 2.3 & 2.4
Plans	: M-802 PUMP SCHEDULE
Application	: SUMP PUMP SUBMERSIBLE
Brand	: HYDROMATIC
Model	: SPX50 & SK60
Revised #	:
Supplyer	: ATLANTIS POMPES ST-FOY
Date	: **16/06/2018**
By	: Martin Boucher

STANTEC PROJECT #: 110126045
SUBMITTAL # AD-016

This review by Stantec is for general conformance with the design concept of Stantec's design of the:
- ☐ Architectural
- ☐ Structural
- ☑ Mechanical
- ☐ Electrical
- ☐ Other

component(s) only and does not mean that Stantec has verified or approves the shop drawing(s). The Contractor remains solely responsible for the shop drawing(s) and this review by Stantec does not relieve the Contractor of the Contractor's responsibility for errors or omissions in the shop drawing(s) or for meeting all requirements of the contract documents. This review does not mean that Stantec approves the detailed design inherent in the shop drawing, responsibility for which shall remain with the Contractor submitting same, nor does this review mean that Stantec accepts any deviation of the shop drawing(s) from the contract documents. The Contractor is responsible for confirming all dimensions and correlating them at the job site, for all construction means, methods and techniques, and for coordination of construction work of all trades, including coordination of all shop drawings.

Stantec

- ☐ REVIEWED
- ☑ REVIEWED, AS NOTED
- ☐ REVISE AND RESUBMIT
- ☐ NOT REVIEWED

DATE 2018-06-26
BY Brendan Zrum, P.Eng

HYDROMATIC®
SPX50/SPX50H
EXPLOSION PROOF, SEWAGE EJECTOR

PERFORMANCE DATA

Wholesale Products **Page:** 6800-1
Dated: October 2007
SPX50 RPM: **1750** Discharge: **2"** Solids: **2"**
SPX50H RPM: **1750** Discharge: **1 ½"** Solids: **¾"**

TAG : P-2.1 & P-2.2
SUMP (DUPLEX)

THE TRUE COMPLETE NUMBER WITH THE VOLTAGE AND LENGHT OF CABLE IS : SPX50M7-20

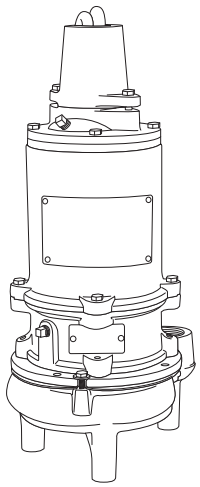

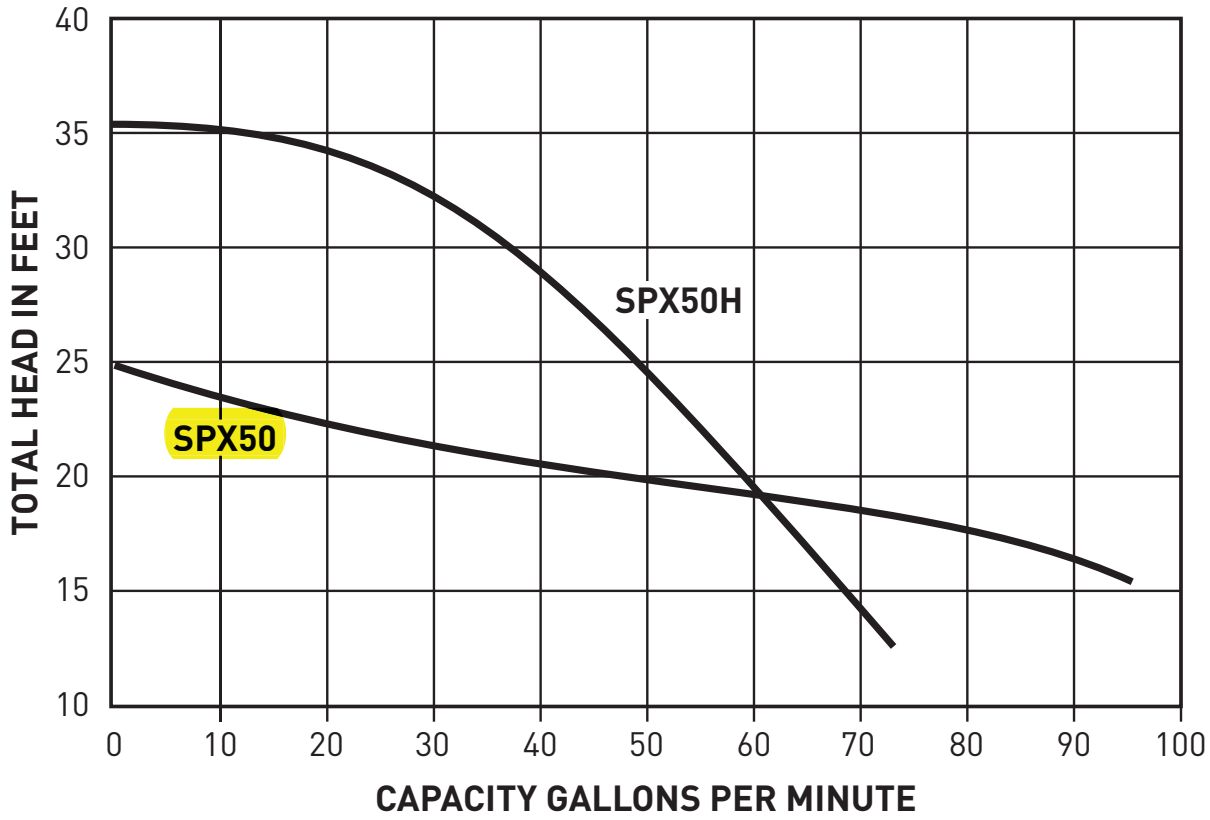

The curves reflect maximum performance characteristics without exceeding full load (Nameplate) horsepower. All pumps have a service factor of 1.2. Operation is recommended in the bounded area with operational point within the curve limit. Performance curves are based on actual tests with clear water at 70° F. and 1280 feet site elevation.

PENTAIR

Conditions of Service:

GPM:_____ **TDH**:_____

HYDROMATIC®

SPX50/SPX50H EXPLOSION PROOF, SEWAGE EJECTOR

Wholesale Products Page: 6800-2
Dated: October 2007

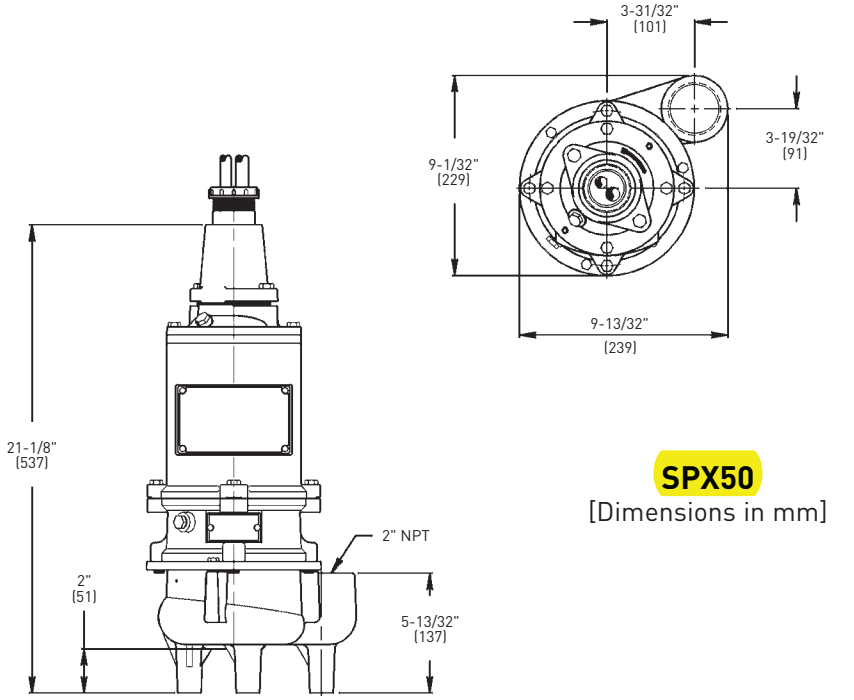

SPX50
[Dimensions in mm]

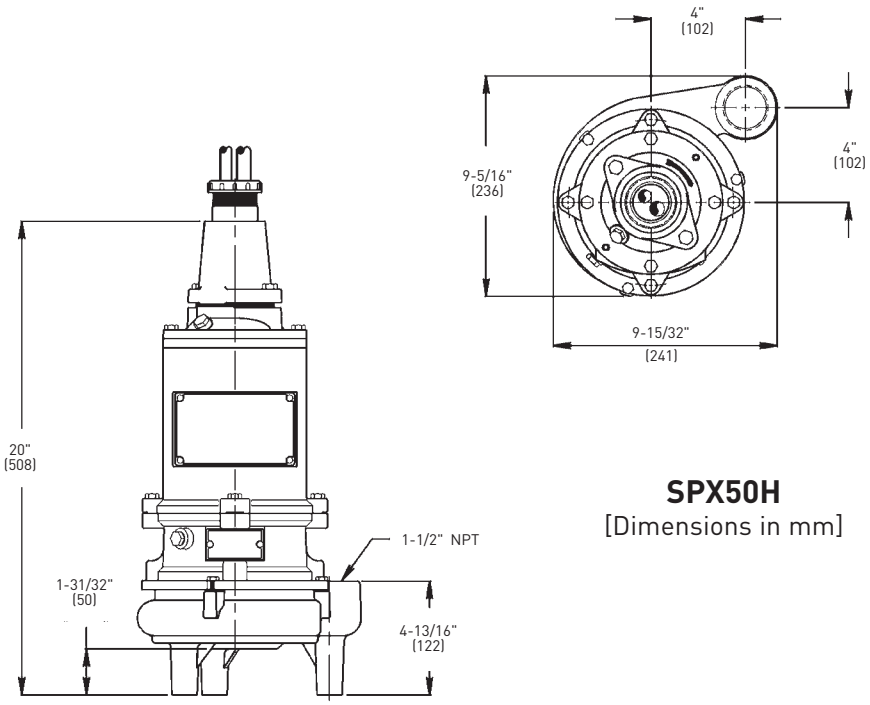

SPX50H
[Dimensions in mm]

All dimensions in inches. Metric for international use. Component dimensions may vary ± 1/8 inch. Dimensional data not for construction purpose unless certified. Dimensions and weights are approximate. On/Off level adjustable. We reserve the right to make revisions to our product (s) and the product (s) specifications without notice.

HYDROMATIC®
SPX50/SPX50H
EXPLOSION PROOF, SEWAGE EJECTOR

Wholesale Products **Page:** 6800-3
Dated: October 2007

MODEL: SPX50

R.P.M.	1750
MOTOR TYPE	OIL COOLED INDUCTION, CAPACITOR START
MOTOR DESIGN NEMA TYPE	TYPE N
GENERAL INSULATION CLASS	B
MAXIMUM STATOR TEMPERATURE	266°F (130°C)
MOTOR PROTECTION	WINDING HEAT SENSORS

HP	VOLTAGE	PHASE	NEC CODE	SERVICE FACTOR	FULL LOAD AMPS
1/2	200/230	1	-	1	5.9/5.3

MODEL: SPX50H

R.P.M.	1750
MOTOR TYPE	OIL COOLED INDUCTION, CAPACITOR START
MOTOR DESIGN NEMA TYPE	TYPE N
GENERAL INSULATION CLASS	B
MAXIMUM STATOR TEMPERATURE	266°F (130°C)
MOTOR PROTECTION	WINDING HEAT SENSORS

HP	VOLTAGE	PHASE	NEC CODE	SERVICE FACTOR	FULL LOAD AMPS
1/2	200/230	1	-	1	5.9/5.3

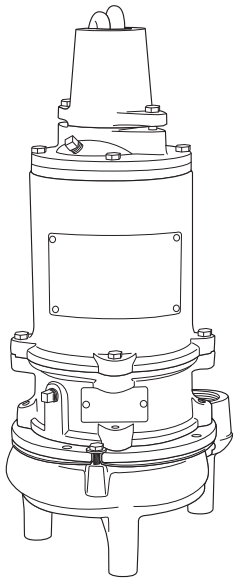

PENTAIR

HYDROMATIC®
SPX50/SPX50H
EXPLOSION PROOF, SEWAGE EJECTOR

Wholesale Products Page: 6800-4
Dated: October 2007

MODEL: SPX50/SPX50H

Physical Data

DISCHARGE SIZE	2" NPT (SPX50), 1 ½" NPT (SPX50H)
SOLIDS SIZE	2" (SPX50), ¾" (SPX50H)
IMPELLER TYPE	RECESSES
CABLE LENGTH	20' STANDARD
PAINT	

Temperature

MAXIMUM LIQUID	140°F
MAXIMUM STATOR	266°F (130°C)
OIL FLASH POINT	390°F

Technical Data

POWER CORD TYPE		SOW / SOW-A
MATERIALS OF CONSTRUCTION	MOTOR HOUSING	CAST IRON
	CASING	CAST IRON
	IMPELLER	CAST IRON
	MOTOR SHAFT	416 STAINLESS STEEL
	HARDWARE	416 STAINLESS STEEL
	"O" RINGS	-
MECHANICAL SEALS Standard:		CARBON / CERAMIC
UPPER BEARING		BALL RADIAL 6203
LOWER BEARING		BALL - THRUST 6306

HYDROMATIC®
SPX50/SPX50H
EXPLOSION PROOF, SEWAGE EJECTOR

Wholesale Products **Page:** 6800-5
Dated: October 2007

MODELS: SPX50/SPX50H

1.01 **GENERAL**

Contractor shall furnish all labor, materials, equipment and incidentals required to provide _____ (Qty.) submersible centrifugal sewage pump(s) as specified herein. The pump models covered in this specification are the SPX50/SPX50H. The pump furnished for this application shall be MODEL _____ as manufactured by Hydromatic Pumps.

2.01 **DESIGN CONDITIONS**

Each pump shall be rated _____ H.P., _____ volts, _____ phase, _____ hertz and operate at _____ RPM.

3.01 **OPERATING CONDITIONS**

The pump shall deliver _____ U.S. GPM/LPS at feet/meters TDH, and handle a _____ inch solid. The curve submitted for approval shall state, in addition to head and capacity performance, solid handling capability, amp rating, and design impeller diameter.

4.01 **CONSTRUCTION**

Each pump shall be of the sealed submersible type, incorporating features normally found in pumps furnished for the residential market.

These features include:

1. The seal housing for the SPX50/SPX50H is corrosion resistant cast iron.
2. The pump inlet shall be open and clear, without screening to provide access for sewage and solids.
3. All external mating parts shall be machined and Buna N, O-Ring sealed.
4. All fasteners exposed to the pumped liquid shall be 300 series stainless steel.
5. All power cords shall be water resistant UL or CSA approved, with double insulation, and sized as a function of Amp. draw.

5.01 **MOTOR AND SHAFT**

The stator, rotor and bearings shall be mounted in a sealed submersible type housing. Single phase motors shall be split phase or capacitor start with centrifugal switch. Three phase motors shall be Polyphase. Full Load and Locked Rotor Amps as well as Start and Run winding resistance shall be tabulated for each pump.

6.01 **BEARINGS, SHAFT AND MECHANICAL SEAL**

An upper radial and lower thrust bearing shall be required. These shall be heavy duty single row ball bearings which are permanently and continuously lubricated and cooled by the dielectric oil which fills the motor housing. The motor shaft shall be stainless steel and sealed from the pumped liquid with a carbon ceramic mechanical seal.

HYDROMATIC®
SPX50/SPX50H
EXPLOSION PROOF, SEWAGE EJECTOR

7.01 **IMPELLER**

The Impeller shall be high capacity, two vane, non clog design with pump out vanes on the back side. These vanes wash out grit and stringy material that will damage the shaft and mechanical seal.

8.01 **AUTOMATIC CONTROL**

All single phase pumps should be capable of automatic operation.

9.01 **MANUAL CONTROL**

The Single Phase pumps are not supplied with any type of automatic control. A super or double wide angle piggy-back float switch can be supplied and fitted to these pumps.

10.01 **PAINTING**

All cast iron parts shall be painted before assembly with a water reducible alkyd air dried enamel. The paint shall be applied in one coat with a minimum thickness of 3 to 4 mils.

TWO COATS OF ENAMEL AS PER 22 10 10 2.3.4

12.01 **TESTING**

All pumps shall be individually tested to include the following:

1. The pump and power cord shall be visually inspected for imperfections, cuts or nicks.
2. The pump shall have a ground continuity check and the motor chamber shall be Hi-potted to test for moisture content and/or insulation defects.
3. The motor and volute housing shall be pressurized and a 10 second air leak decay test run.
4. Oil is added, and the pump is run. Voltage and current are monitored visually, electronically, and the tester listens for any noise or malfunction.

PENTAIR

USA
293 WRIGHT STREET, DELAVAN, WI 53115 WWW.HYDROMATIC.COM
PH: 888-957-8677 ORDERS FAX: 800-426-9446

CANADA
269 TRILLIUM DRIVE, KITCHENER, ONTARIO, CANADA N2G 4W5
PH: 519-896-2163 ORDERS FAX: 519-896-6337

Because we are continuously improving our products and services, Pentair reserves the right to change specifications without prior notice.

© 2013 Pentair Ltd. All Rights Reserved.

TAG : P-2.1 & P-2.2

HYDROMATIC® SPX50/SPX50H SUBMERSIBLE EXPLOSION-PROOF PUMPS

HYDROMATIC SPX50 and SPX50H are specifically designed to pump contaminated effluent and water. The SPX50/SPX50H is UL and CSA approved (Class 1, Division 1, Group D) to handle a wide variety of pollutants, including gas and oil.



Features

- HYDROMATIC SPX50/SPX50H is recommended to be sold/used with HYDROMATIC'S UL 913 listed control panel.
- Oil-filled motor for maximum heat dissipation and constant bearing lubrication.
- Recessed impeller reduces radial bearing loads, increases bearing life.
- High torque capacitor start, single phase motor for assured starting under heavy load.
- Seal leak probes warn of seal leak condition.
- On winding heat sensors will stop motor in case of over-heating to prevent costly motor damage.

PENTAIR

WWW.HYDROMATIC.COM

HYDROMATIC® SPX50/SPX50H

Pump Characteristics

Pump/Motor Unit	Submersible Explosion-Proof Sump	
Phase	1 Ø	
Voltage	200	230
Horsepower	1/2 HP	
Run Amps	SPX50 6.5	SPX50H 5.3
Solid Size	2" (SPX50)	3/4" (SPX50H)
Motor Type	Oil Cooled Induction	
	Capacitor Start	
R.P.M.	1750	
Temp. Stator	Max. Design 266° F (130° C)	
Operation	Intermittent	
Coolant Oil	Oil Flash Pt. 390° F	
Hertz	60 Hz	
Heat Sensor	Bi-Metallic	
Temperature	Max. Water 140° F	
NEMA Design	Type N	Type N
Insulation	Class B	
Discharge Size	SPX50 2" NPT	SPX50H 1-1/2" NPT
Unit Weight	SPX50 80 lbs.	SPX50H770 lbs.
Power Cord	Type SOW/SOW-A | Water Resistant 15' 14/4 600 V, 60° C | CSA/UL approved	

Materials of Construction

Part Name	Material
Motor Housing	Cast Iron ASTM-48, 76
Pump Casing	Cast Iron ASTM-48, 76
Coolant/Lubricant	Dielectric Oil
Shaft	416 Stainless Steel
Mechanical Shaft Seal	Dual: Carbon/Ceramic Type 21 BF1C1
Impeller	Recessed, Cast Iron Class 20 A-48-62
Upper Bearing	Ball Radial 6203
Lower Bearing	Ball Thrust 6306
Fasteners	316 Stainless Steel

Performance Data

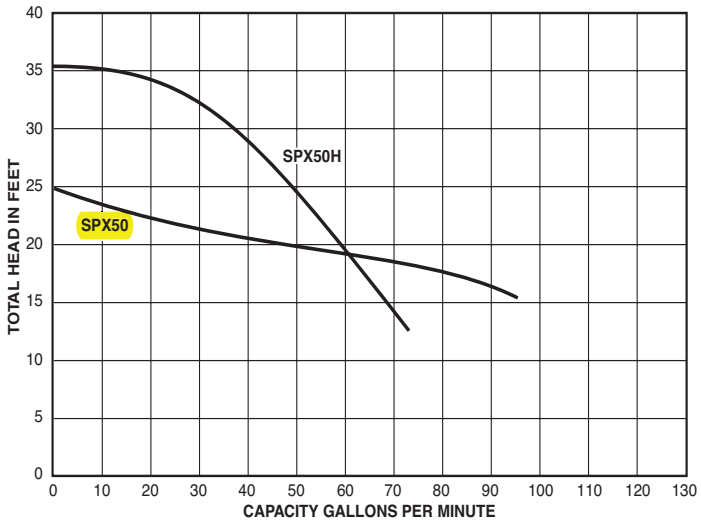

Dimensional Data

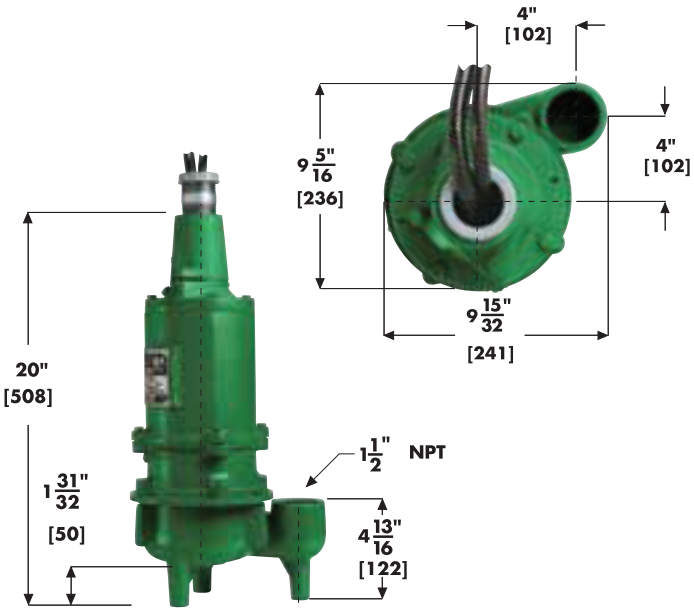

All dimensions in inches. Component dimensions may vary ± 1/8 inch. Dimensional data not for construction purpose unless certified. Dimensions and weights are approximate. On/Off level adjustable. We reserve the right to make revisions to our product and their specifications without notice.

PENTAIR

USA
293 WRIGHT STREET, DELAVAN, WI 53115 WWW.HYDROMATIC.COM
PH: 888-957-8677 ORDERS FAX: 800-426-9446

CANADA
269 TRILLIUM DRIVE, KITCHENER, ONTARIO, CANADA N2G 4W5
PH: 519-896-2163 ORDERS FAX: 519-896-6337

Because we are continuously improving our products and services, Pentair reserves the right to change specifications without prior notice.

© 2012 Pentair Ltd. All Rights Reserved.

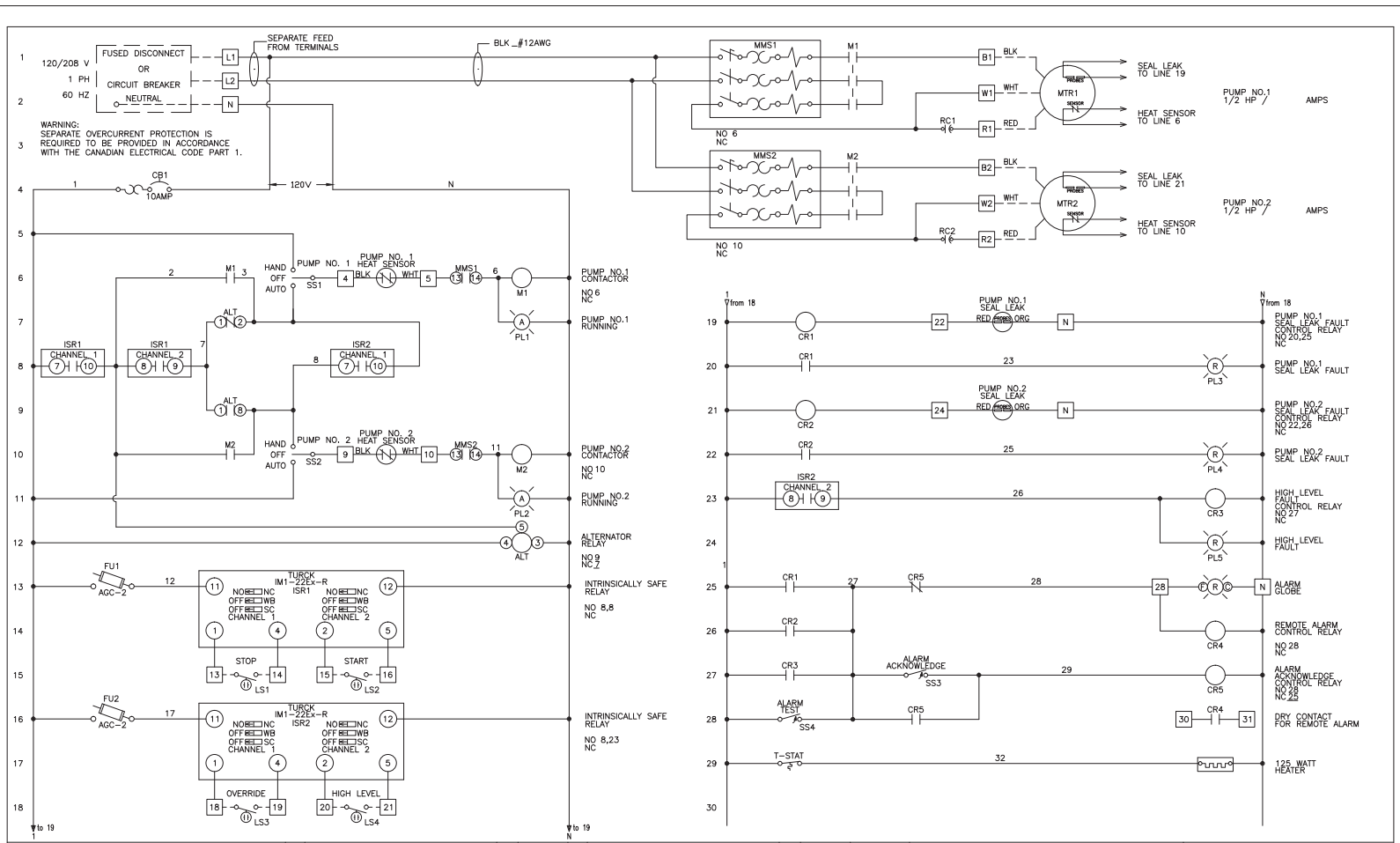

Pentair Canada Inc
490 Pinebush Road, Unit #4
CAMBRIDGE, ONTARIO N1T 0A5
CANADA

CONTROL PANEL
FOR DUPLEX SPX 50 PUMPS
P-2.1 & P2.2

REV	DESCRIPTION	BY	DATE	REV	DESCRIPTION	BY	DATE

REV'D	REF
DESIGNED	I. MURRAY
DRAWN	I. MURRAY
DATE	JUNE 12, 2018
SCALE	N.T.S.
CAD REF.	PEN07398B-1
SHT NO.	1 OF 2

TITLE: DUPLEX PUMP CONTROL SYSTEM MODEL NO. CPSX5-01DW

DWG NO. PS2180- REV 0

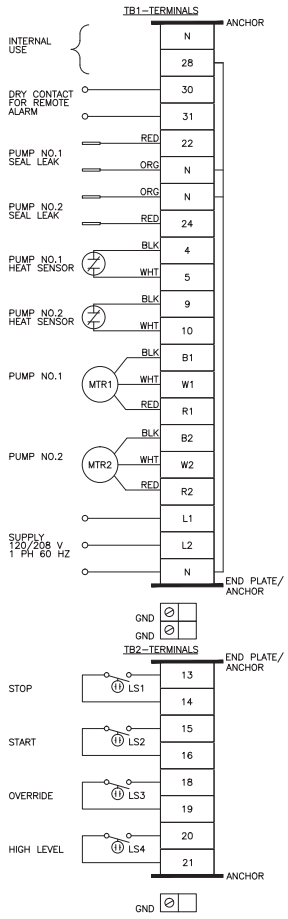

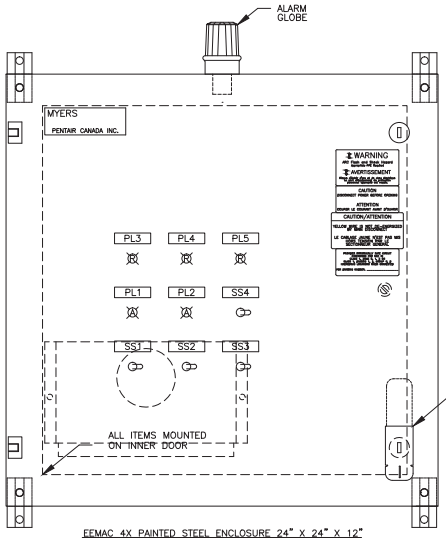

EEMAC 4X PAINTED STEEL ENCLOSURE 24" X 24" X 12"

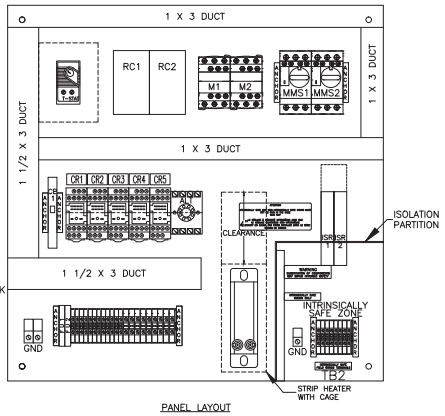

PANEL LAYOUT

NOTES:
PANEL WIRING STANDARDS ARE AS FOLLOW:

DESCRIPTION	COLOUR	WIRE GAUGE
120VAC CONTROL	RED	#16AWG
NEUTRAL WIRE	WHITE	#16AWG
INTRINSICALLY SAFE WIRE	LIGHT BLUE	#16AWG
DC + WIRE	BLUE	#16AWG
DC – WIRE	BLUE/WHITE STRIPES	#16AWG
24VAC WIRE	BROWN	#16AWG
GROUND WIRE	GREEN	#14AWG
DRY CONTACT WIRE	YELLOW	#16AWG
PLC & ZELIO WIRE	AS REQUIRED	#18AWG
ANALOG + WIRE	BLACK	#18AWG
ANALOG – WIRE	WHITE	#18AWG
POWER WIRE	BLACK	AS NOTED

NOTES: A) INTRINSICALLY SAFE WIRING MUST BE RUN IN SEPARATE CONDUIT TO TERMINALS IN CONTROL PANEL.

B) IF FLOATS ARE NOT WIRED DIRECTLY TO TERMINALS IN CONTROL PANEL, CAUTION MUST BE TAKEN TO PREVENT CONDENSATION FROM FORMING ACROSS FLOAT CONTACT CIRCUIT. THIS MAY CAUSE FALSE OPERATION OF INTRINSICALLY SAFE RELAY.

C) ONLY INTRINSICALLY SAFE WIRING IS ALLOWED IN THE SEGREGATED AREA

D) LENGTH OF CABLE TO BE CONNECTED TO THE BARRIER SHALL BE SPECIFIED BY BARRIER MANUFACTURER OR LEAST OF, LENGTH(ft)=C_a/60 pF AND LENGTH(ft)=L_a/0.2 µH WHERE, (C_a=CAPACITANCE; L_a=INDUCTANCE) PROVIDED BY MANUFACTURER OF BARRIER.

Pentair Canada Inc
490 Pinebush Road, Unit #4
CAMBRIDGE, ONTARIO N1T 0A5
CANADA

CONTROL PANEL
FOR DUPLEX SPX50 PUMPS
P-2.1 & P2.2

REV	DESCRIPTION	BY	DATE	REV	DESCRIPTION	BY	DATE

REV'D | REF
DESIGNED I. MURRAY | SCALE 3/16" = 1"
DRAWN I. MURRAY | CAD REF. PEN07398B-2
DATE JUNE 12, 2018 | SHT NO. 2 OF 2

TITLE: DUPLEX PUMP CONTROL SYSTEM MODEL NO. CPSX5-01DW
DWG NO. PS2180- | REV 0

CSB4-SS

FLOAT BRACKET FOR MOUNTING UP
TO (4) FOUR CONTROLS

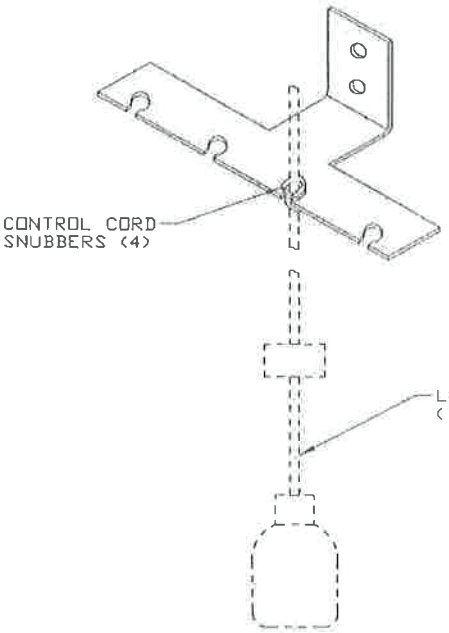

bracket is 11' wide
and 4" deep 3" high

CSB5-SS

FLOAT BRACKET FOR MOUNTING UP
TO (5) FIVE CONTROLS

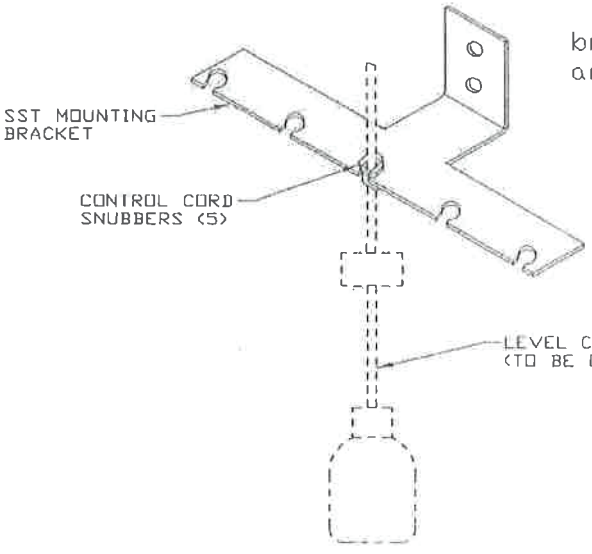

bracket is 14' wide
and 4" deep 3" high

ES-2365A

SJE SIGNALMASTER® Control Switch

Mechanically-activated, narrow-angle float switch designed to activate pump control panels and alarms.



This narrow-angle sensing device is used to accurately monitor liquid levels in:

- water
- sewage applications

The SJE SignalMaster® control switch is not sensitive to rotation.

Normally Open Model (high level)
The control switch turns on (closes) when the switch tips slightly **above** horizontal signaling a high level, and turns off (opens) when the switch drops slightly below horizontal.

Normally Closed Model (low level)
The control switch turns on (closes) when the switch tips slightly **below** horizontal signaling a low level, and turns off (opens) when the switch tips slightly above horizontal.

FEATURES

- Mechanically-activated, snap action contacts.
- High impact, corrosion resistant, polypropylene float housing.
- Not sensitive to rotation.
- Control differential of 1.5 inches (4 cm) above or below horizontal.
- Yellow colored cap for easy identification of normally open control switch.
- White colored cap for easy identification of normally closed control switch.
- UL Listed for use in water and sewage.
- CSA Certified.
- Five-year limited warranty.

SSPMA MEMBER

LR54245

LISTED 83N2

Member of: Hydraulic Institute

SPECIFICATIONS

CABLE: flexible 18 gauge, 2 conductor (UL, CSA) SJOW, water-resistant (CPE)

FLOAT: 2.74 inch diameter x 4.83 inch long (7.0 x 12.3 cm) high impact, corrosion resistant, polypropylene housing for use in sewage and water up to 140°F (60°C)

MAXIMUM WATER DEPTH: 30 feet (9 meters), 13 PSI (90 kPa)

ELECTRICAL: 5 amp, 125/250 VAC, 50/60 Hz

NOTE: This switch is not recommended for controlling:

- electric loads less than 100 milliamps, 12 VAC
- non-arcing electric loads

OPTIONS

This switch is available:

- CE certified unit available upon request.
- for normally open (high level) applications or normally closed (low level) applications.
- in standard cable lengths of 10, 15, 20, or 30 feet and 3, 5, 6, or 10 meters (longer lengths available)
- with two mounting options that allow for flexibility in installation:

  Mounting Clamp: for applications where the switch can be attached to a discharge pipe or similar mounting device.

  Externally Weighted: for applications where the switch can be suspended from above.

SEE BACKSIDE FOR ORDERING INFORMATION.
SEE PRICE BOOK FOR LIST PRICE.

SJE Rhombus®
PO Box 1708, Detroit Lakes, MN 56502
1-888-DIAL-SJE • 1-218-847-1317
1-218-847-4617 Fax
email: customer.service@sjerhombus.com
www.sjerhombus.com

SJE SIGNALMASTER® Control Switch

Mechanically-activated, narrow-angle float switch designed to activate pump control panels and alarms.

ORDERING INFORMATION

Normally Open		Normally Closed		Shipping Weight
Part #	**Description**	**Part #**	**Description**	
1006042	10SGMPCNO	**1006046**	10SGMPCNC	1.04 lbs.
1006050	10SGMWENO	**1006054**	10SGMWENC	2.13 lbs.
1006043	15SGMPCNO	**1006047**	15SGMPCNC	1.37 lbs.
1006051	15SGMWENO	**1006055**	15SGMWENC	2.45 lbs.
1006044	20SGMPCNO	**1006048**	20SGMPCNC	1.69 lbs.
1006052	20SGMWENO	**1006056**	20SGMWENC	2.70 lbs.
1006045	30SGMPCNO	**1006049**	30SGMPCNC	2.34 lbs.
1006053	30SGMWENO	**1006057**	30SGMWENC	3.43 lbs.

PC = **P**ipe **C**lamp **WE** = **W**eighted **E**xternally **NO** = **N**ormally **O**pen **NC** = **N**ormally **C**losed
NOTE: Descriptions are grouped by cable length measured in feet (10, 15, 20, 30).
SEE PRICE BOOK FOR LIST PRICE.

OPTIONS

MOUNTING CLAMP
is standard - deduct optional

PACKAGING
Bagged - standard.
Boxed - optional
Bulk - optional

ADDITIONAL CABLE
Longer cable lengths available. Please call for details.

UL Listed for Water & Sewage

LISTED 83N2 LR54245

SSPMA MEMBER

SPECIFICATIONS

CABLE: flexible 18 gauge, 2 conductor (UL) SJOW, water-resistant (CPE)

FLOAT: 2.74 inch diameter x 4.83 inch long (7 x 12.3 cm), high impact, corrosion resistant polypropylene for use in sewage and water up to 140°F (60°C)

MAXIMUM WATER DEPTH: 30 feet (9 meters), 13 psi

ELECTRICAL: 5 amp, 125/250 VAC, 50/60 Hz

This switch is not recommended for controlling:

- electric loads less than 100 milliamps, 12 VAC
- non-arcing electric loads

OTHER INFORMATION

NORMALLY OPEN (high level) OPERATION
The control switch closes (turns on) when the float tips slightly **above** horizontal signaling a high level, and opens (turns off) when the float drops slightly **below** horizontal in water or sewage applications.

NORMALLY CLOSED (low level) OPERATION
The control switch closes (turns on) when the float tips slightly **below** horizontal signaling a low level, and opens (turns off) when the float tips slightly **above** horizontal in water or sewage applications.

Call or fax your order!
1-888-DIAL-SJE (1-888-342-5753) Fax 218-847-4617

SJE Rhombus®
www.sjerhombus.com
customer.service@sjerhombus.com

9500115A

© SJE-Rhombus 07/16

FLOAT ACCESSORIES

Cable Clamp Assembly, Float Brackets, Pipe Mounting Bracket, Cable Weights, ETM w/ Piggy-Back Plug, Vertical Reed Switch, Anchor and Chain

CABLE WEIGHT

Provides an accurate pivot point for suspended float switches.



U.S. Patent 5,306,885

- Gripper teeth on clip and weight channel securely lock float cable into place
- Cable Weight can be adjusted without the use of tools

HOUSING: 1 pound, 12 ounce (0.8 kgs.), 2.8 inch diameter x 3.3 inch long (7.1 cm diameter x 8.4 cm), impact resistant, non-corrosive, PVC housing for use in liquids up to 140°F (60°C).

CLIP: injection molded acetal plastic
WIRE/CABLE ACCOMMODATED: SJOW, SJTW, 18/2, 18/3, 16/2, 16/3, 14/2 and 14/3
SHIP WEIGHT: 2 lbs. (.907 kgs)

Part Number	Description
1002230	Cable Weight

CABLE WEIGHT MINI

Provides an accurate pivot point for suspended float switches.



- One piece cable weight
- Turn and Lock for easy installation.

HOUSING: 9.6 ounces (0.27 kgs.), 2.5 inch diameter x 2.5 inch long (6.35 cm diameter x 6.35 cm), impact resistant, non-corrosive, PVC housing for use in liquids up to 140°F (60°C)
WIRE/CABLE ACCOMMODATED: SJOW, SJTW, 18/2, 18/3

Part Number	Description
1030356	Cable Weight Mini

ELAPSED TIME METER WITH PIGGY-BACK PLUG

Plugs into switched outlet or piggy-back switch of plugger control panel. Unit must be placed inside an enclosure.



- Screws and mounting adhesive included.

Part Number	Description
1022846	ETM w/120V piggy-back plug
1032834	ETM w/230V piggy-back plug

VERTICAL REED SWITCH



- Control differential: .375 inch (1 cm)
- Maximum angle from vertical: 5°
- Electrical: 250 mAmps, 12-125 VAC, 50/60 Hz
  500 mAmps, 6-12 VDC, 50/60 Hz
- Housing and Float: 1.60 inch diameter x 6.7 inch long (4.06 cm X 17.01 cm), high impact, corrosion resistant PVC for use in sewage and non-potable water up to 120°F (50°C)

Part Number	Description
1011027	10ft VRS 120V Bulk
1016561	15ft VRS 120V Bulk

ANCHOR



- 10 lb. weight
- Yellow, vinyl coated, mushroom style

Part Number	Description
1018687	10 lb. Mushroom Anchor

CHAIN



- 1/8" thickness
- 316 grade stainless steel
- Available in one foot increments

Part Number	Description
1018823	1/8 inch Chain

PRODUCTS CONTINUED ON NEXT PAGE.
SEE PRICE BOOK FOR LIST PRICES.

SJE Rhombus®
PO Box 1708, Detroit Lakes, MN 56502
1-888-DIAL-SJE • 1-218-847-1317
1-218-847-4617 Fax
email: sje@sjerhombus.com
www.sjerhombus.com

Ball Check Valve

Model 208T

Sizes 1" Thru 2"/ 25mm thru 50mm

FLOMATIC®
Flomatic Corporation

Materials

NOTE: PLASTIC VALVES SHOULD NOT BE BURIED UNDERGROUND

LOW-LEAD IAPMO R&T NSF/ANSI 372 #1 Pb Lead-Free

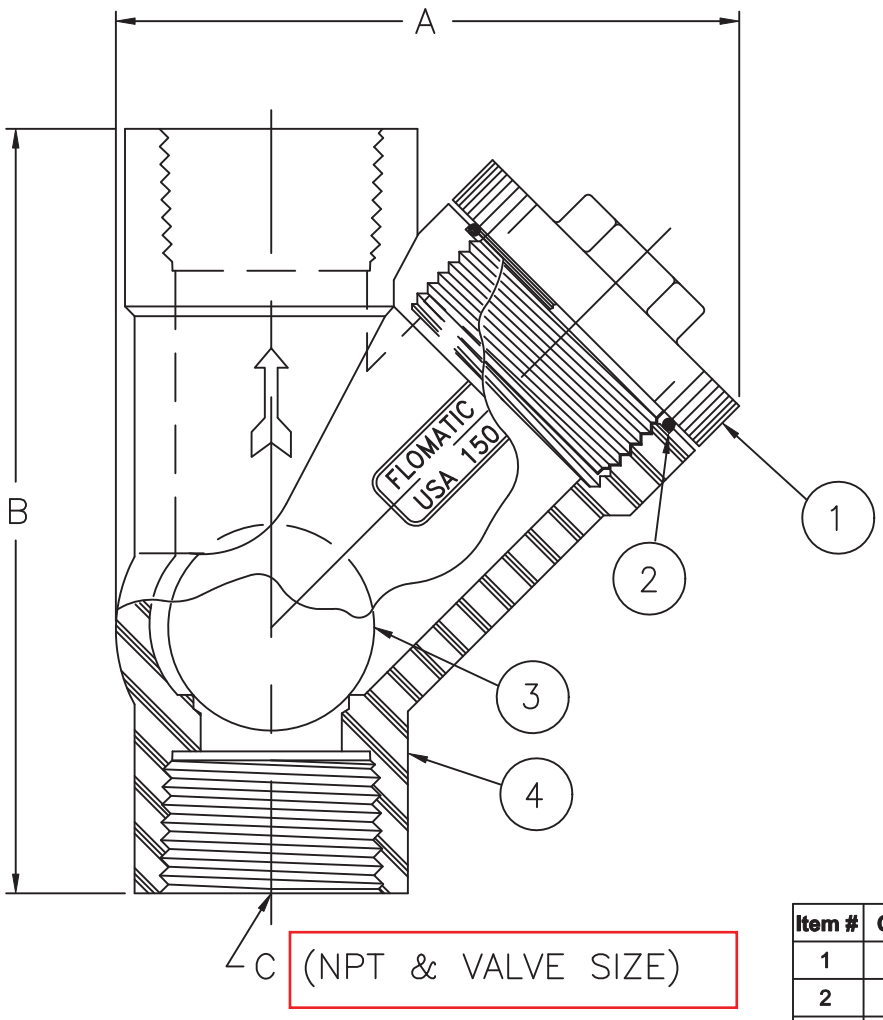

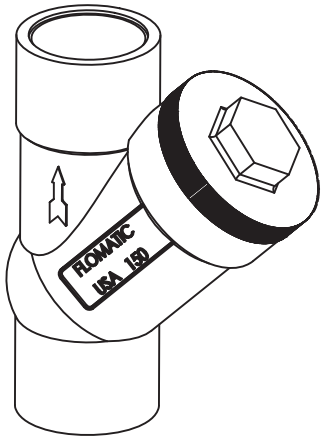

Item #	Qty	Description	Material
1	1	Cap	PVC
2	1	O'Ring	Buna-n
3	1	Ball (Sinking)	Buna-n
4	1	Body	PVC
5	2	Bushing (not shown)*	PVC

*Uses bushing not shown
Max Temp 150°F (65°C)
Max Inlet Pressure 100 psi (7 bar)

Dimensions

Size		Part #	A		B		Weight	
inch	mm		inch	mm	inch	mm	lbs	kg
1*	25	2131-T*	4-1/2	114	6-27/32	174	1	.45
1-1/4	32	2132-T	4-1/2	114	5-21/32	144	1	.45
1-1/2*	40	2133-T*	6-11/32	161	8-13/64	208	2	.91
2	50	2134-T	6-11/32	161	7-1/16	179	2	.91

Flomatic Corporation can accept no responsibility for possible errors in catalogues, brochures and other printed material. Flomatic Corporation reserves the right to alter its products without notices. This also applies to product already agreed. All trademarks in this material are property of the respective companies. All right reserved. ©2016 Flomatic Corporation. The drawings & information on this drawing sheet are the sole & exclusive property of Flomatic Corporation. Any reproduction, distribution, display or use of these drawings or information in whole or in part without written authorization of Flomatic Corporation is strictly prohibited.

FLOMATIC® VALVES

November 1, 1991
Dwg No:S2131-34 Rev: L (11/16)

FLOMATIC CORPORATION
GLENS FALLS, N.Y. 12801
PHONE (518) 761-9797
FAX (518) 761-9798

COMPACT PVC / CPVC BALL VALVES

PVC Ball Valves

0929 Series 1/2" - 4" Threaded (FPT)
0929S Series 1/2" - 4" Slip

- 150 PSI Working Pressure @ 73°F (22°C)
- Temperature Rating: 32°F to 122°F (0°C to 50°C)
- EPDM Seats/EPDM O-ring Seal
- White PVC Molded Body with Black PVC Handle

PVC Ball Valves

0921 Series 1/2" - 4" Threaded (FPT)
0921S Series 1/2" - 4" Slip

- EPDM Seats/EPDM O-Ring Seal
- White PVC Body with Black PVC Handle
- NSNSF/ANSI Standard 61 & 372 Certified

0923 Series 1/2" - 2" Threaded (FPT)
0923S Series 1/2" - 2" Slip

- 150 PSI Working Pressure @ 73°F (22°C)
- Temperature Rating: 41°F to 122°F (5°C to 50°C)
- PTFE Seats/Viton O-ring Seal
- White PVC Body with Red PVC Handle

Refer to Temperature Correction Factors

NO LEAD LEAD-FREE — Third Party Certified to NSF / ANSI 372



CPVC Hot Water System Ball Valves

0922CTS Series 1/2" - 2" Threaded (CTS x CTS)

- 150 PSI Working Pressure
- Temperature Rating: Continuous 194°F (90°C)
  Short Hours 212°F (100°C)
- PTFE Seats/EPDM O-ring Seal
- Beige CPVC Molded Body with Red Handle
- NSF/ANSI Standard 61 & 372 Certified

UNION PVC BALL VALVES

PVC Blocked True Union Ball Valves

0924 Series 1/2" - 2" Threaded (FPT)

- Double Union/Double block design permits in-line maintenance without disconnecting pipe
- Bayonet style locks prevent ball from being blown out
- Handle equipped with removable spanner devise
- Full unobstructed flow without any turbulence or pressure drop
- Working Temperature Range: 41°F to 122°F (5°C to 50°C)
- 150 PSI Working Pressure at 73°F (22°C)
- EPDM O-rings
- Suitable for both schedule 40 & 80 PVC pipe

Shipped complete with both thread and slip interchangeable connections



NO LEAD LEAD-FREE — Third Party Certified to NSF / ANSI 372

PVC Blocked True Union Ball Valves

0925NL Series 1/2" - 4" EPDM "O" RING SEAL ← 2"
0926 Series 1/2" - 4" VITON "O" RING SEAL

- 2-Way Blocking True Union Ball Valve - 150 PSI Working Pressure @ 73°F (22°C)
- Unique Double Union/Double Block design permits in-line maintenance without disconnecting pipe
- Both ends blocked with bayonet-style locks which prevent ball from being blown out
- Handle equipped with removable spanner device
- Full, unobstructed flow without any turbulence or pressure drop
- Available with either EPDM or Viton "O"-ring seals
- Self Lubricating PTFE (polytetrafluoroethylene) Seats are corrosion and chemical resistant
- Quick and easy disassembly without use of special tools, hand tighten only
- Suitable for both schedule 40 & 80 PVC pipe

PVC Single Union Ball Valves

0933 Series 1-1/2" - 2" Threaded (FPT)
0933S Series 1-1/2" - 4" Slip

- Threaded or socket
- Working Pressure 150 PSI @ 73°F
- Lightweight and compact design suitable for plumbing, pool and spa field
- PTFE (polytetrafluoroethylene) seat is corrosion and chemical resistantto most chemicals
- Non blocking design
- Suitable for both schedule 40 & 80 PVC pipe

HYDROMATIC®
SK60
SUBMERSIBLE SEWAGE EJECTOR

PERFORMANCE DATA

Wholesale Products **Page:** 6290-1
Dated: January 2001
RPM: **1750** Discharge: **2"** Solids: **2"**

TAG : P-2.3 & P-2.4 , P-2.5 & P-2.6

THE TRUE COMPLETE NUMBER WITH THE
VOLTAGE AND LENGHT OF CABLE IS : SK60M6-20

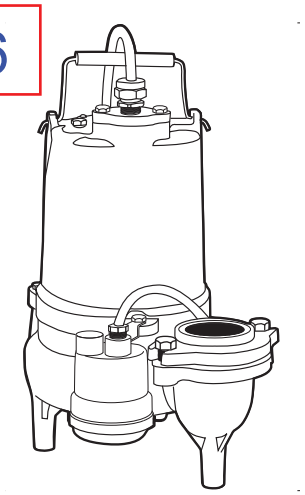

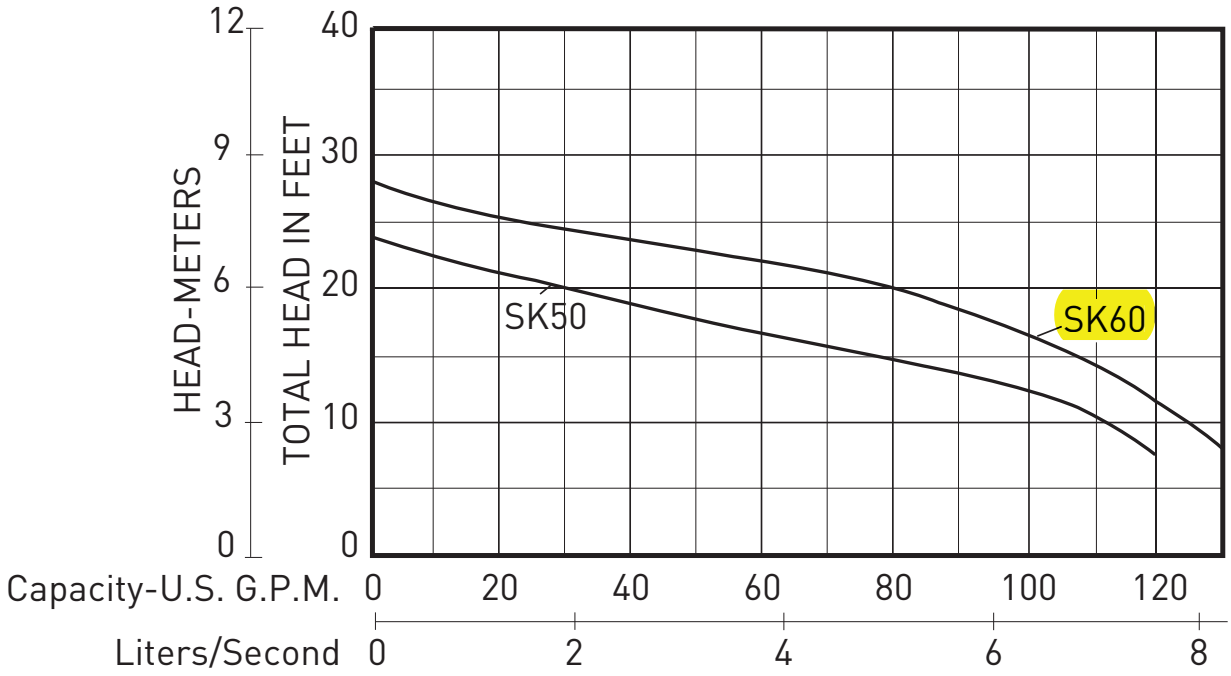

The curves reflect maximum performance characteristics without exceeding full load (Nameplate) horsepower. All pumps have a service factor of 1.2. Operation is recommended in the bounded area with operational point within the curve limit. Performance curves are based on actual tests with clear water at 70° F. and 1280 feet site elevation.

PENTAIR

Conditions of Service:

GPM:_____ **TDH**:_____

HYDROMATIC®
SK60
SUBMERSIBLE SEWAGE EJECTOR

Wholesale Products **Page:** 6290-2
Dated: January 2001

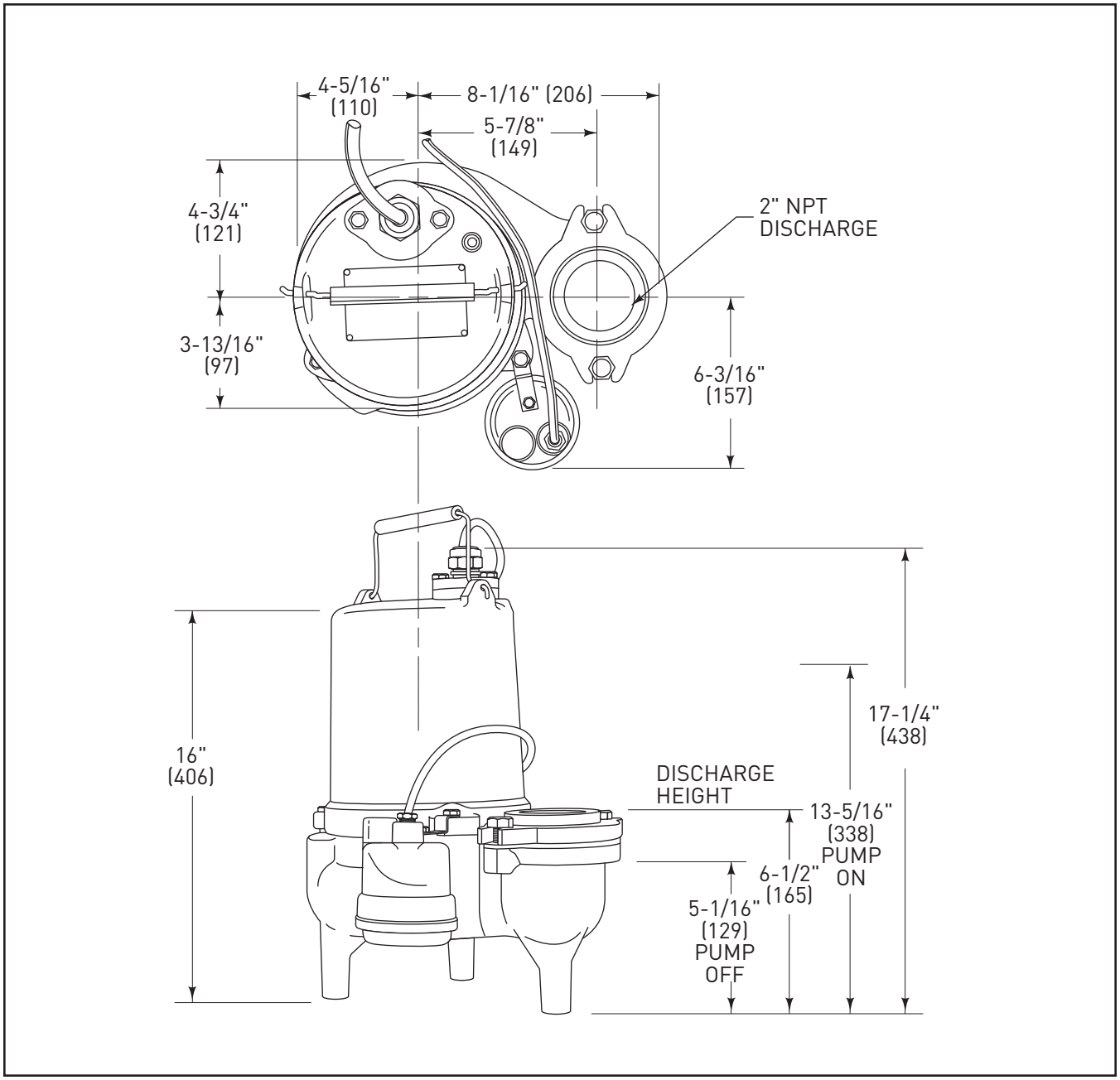

All dimensions in inches. Metric for international use. Component dimensions may vary ± 1/8 inch. Dimensional data not for construction purpose unless certified. Dimensions and weights are approximate. On/Off level adjustable. We reserve the right to make revisions to our product (s) and the product (s) specifications without notice.

HYDROMATIC®

SK60

SUBMERSIBLE SEWAGE EJECTOR

Wholesale Products **Page:** 6290-3
Dated: January 2001

MODEL: SK50

R.P.M.	1750
MOTOR TYPE	OIL FILLED WITH AUTOMATIC RESET THERMAL OVERLOAD
MOTOR PROTECTION	AUTOMATIC RESET / THERMAL OVERLOAD

HP	VOLTAGE	PHASE	NEC CODE	SERVICE FACTOR	FULL LOAD AMPS
6/10	115	1	-	1	12
	200				6.9
	230				6.0
	200	3			2.9
	230				2.5
	460				1.3
	575				1.04

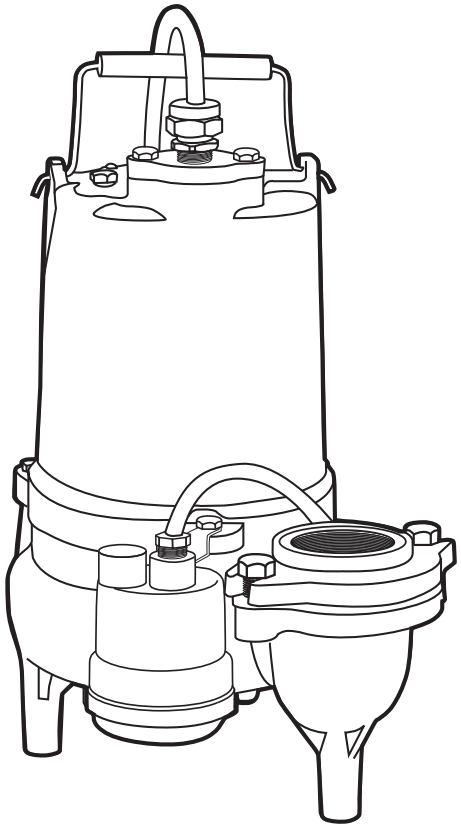

PENTAIR

HYDROMATIC®
SK60
SUBMERSIBLE SEWAGE EJECTOR

Wholesale Products Page: 6290-4
Dated: January 2001

MODEL: SK50

Physical Data

DISCHARGE SIZE	2" NPT (STANDARD), 3" NPT (OPTIONAL)
SOLIDS SIZE	2"
IMPELLER TYPE	NON CLOG
CABLE LENGTH	10' STANDARD 20' OPTIONAL
PAINT	PAINTED AFTER ASSEMBLY, DARK GREEN, WATER REDUCIBLE ENAMEL, ONE COAT, AIR DRIED.

Temperature

MAXIMUM LIQUID	140°F
MAXIMUM STATOR	-
OIL FLASH POINT	-

Technical Data

POWER CORD TYPE		STW-A
MATERIALS OF CONSTRUCTION	MOTOR HOUSING	CAST IRON
	CASING	CAST IRON
	IMPELLER	CAST IRON
	MOTOR SHAFT	416 STAINLESS STEEL
	HARDWARE	STAINLESS STEEL
	"O" RINGS	BUNA-N
MECHANICAL SEALS Standard:		CARBON / CERAMIC
UPPER BEARING		SINGLE ROW-BALL
LOWER BEARING		SINGLE ROW-BALL

HYDROMATIC®
SK60
SUBMERSIBLE SEWAGE EJECTOR

Wholesale Products Page: 6290-5
Dated: January 2001

MODEL: SK50

1.01 **GENERAL**

Contractor shall furnish all labor, materials, equipment and incidentals required to provide _____ (Qty.) submersible centrifugal sewage ejector pump(s) as specified herein. The pump model covered in this specification is the SK60. The pump furnished for this application shall be MODEL _____ as manufactured by Hydromatic Pumps.

2.01 **DESIGN CONDITIONS**

Each pump shall be rated _____ H.P., _____ volts, _____ phase, _____ hertz and operate at _____ RPM.

3.01 **OPERATING CONDITIONS**

The pump shall deliver _____ U.S. GPM/LPS at feet/meters TDH, and handle a _____ inch solid. The curve submitted for approval shall state, in addition to head and capacity performance, solid handling capability, amp rating, and design impeller diameter.

4.01 **CONSTRUCTION**

Each pump shall be of the sealed submersible type, incorporating features normally found in pumps furnished for the residential market.

These features include:

1. The pump volute, motor, and seal housing shall be high quality gray cast iron, ASTM A-48, Class 30.
2. The pump inlet shall be open and clear, without screening to provide access for sewage and solids.
3. All external mating parts shall be machined and Buna N, O-Ring sealed.
4. All fasteners exposed to the pumped liquid shall be 300 series stainless steel.
5. All power cords shall be water resistant UL or CSA approved, with double insulation, and sized as a function of Amp. draw.

5.01 **MOTOR AND SHAFT**

The stator, rotor and bearings shall be mounted in a sealed submersible type housing. Single phase motors shall be split phase or capacitor start with centrifugal switch. Three phase motors shall be Polyphase. Full Load and Locked Rotor Amps as well as Start and Run winding resistance shall be tabulated for each pump.

6.01 **BEARINGS, SHAFT AND MECHANICAL SEAL**

An upper bushing bearing and lower thrust bearing shall be required. The upper bearing shall be brass while the lower bearing is a heavy duty single row ball. They are both permanently and continuously lubricated and cooled by the dielectric oil which fills the motor housing. The motor shaft shall be stainless steel and sealed from the pumped liquid with a carbon ceramic mechanical seal.

SK60
SUBMERSIBLE SEWAGE EJECTOR

7.01 **IMPELLER**

The Impeller shall be high capacity, two vane, non-clog design with pump out vanes on the back side. These vanes wash out grit and stringy material that will damage the shaft and mechanical seal.

8.01 **AUTOMATIC CONTROL**

All single phase pumps should be capable of automatic operation.

9.01 **PRESSURE SWITCH**

The Single Phase SK60 pump is furnished with a pressure diaphragm switch that features a piggy-back plug that allows the pump to be operated manually without removal from the sump.

10.01 **PAINTING**

All cast iron parts shall be painted before assembly with a water reducible alkyd air dried enamel. The paint shall be applied in one coat with a minimum thickness of 3 to 4 mils.

11.01 **TESTING**

All pumps shall be individually tested to include the following:

1. The pump and power cord shall be visually inspected for imperfections, cuts or nicks.
2. The pump shall have a ground continuity check and the motor chamber shall be Hi-potted to test for moisture content and/or insulation defects.
3. The motor and volute housing shall be pressurized and a 10 second air leak decay test run.
4. Oil is added, and the pump is run. Voltage and current are monitored visually, electronically, and the tester listens for any noise or malfunction.

PENTAIR

USA
293 WRIGHT STREET, DELAVAN, WI 53115 WWW.HYDROMATIC.COM
PH: 888-957-8677 ORDERS FAX: 800-426-9446

CANADA
269 TRILLIUM DRIVE, KITCHENER, ONTARIO, CANADA N2G 4W5
PH: 519-896-2163 ORDERS FAX: 519-896-6337

Because we are continuously improving our products and services, Pentair reserves the right to change specifications without prior notice.

© 2013 Pentair Ltd. All Rights Reserved.

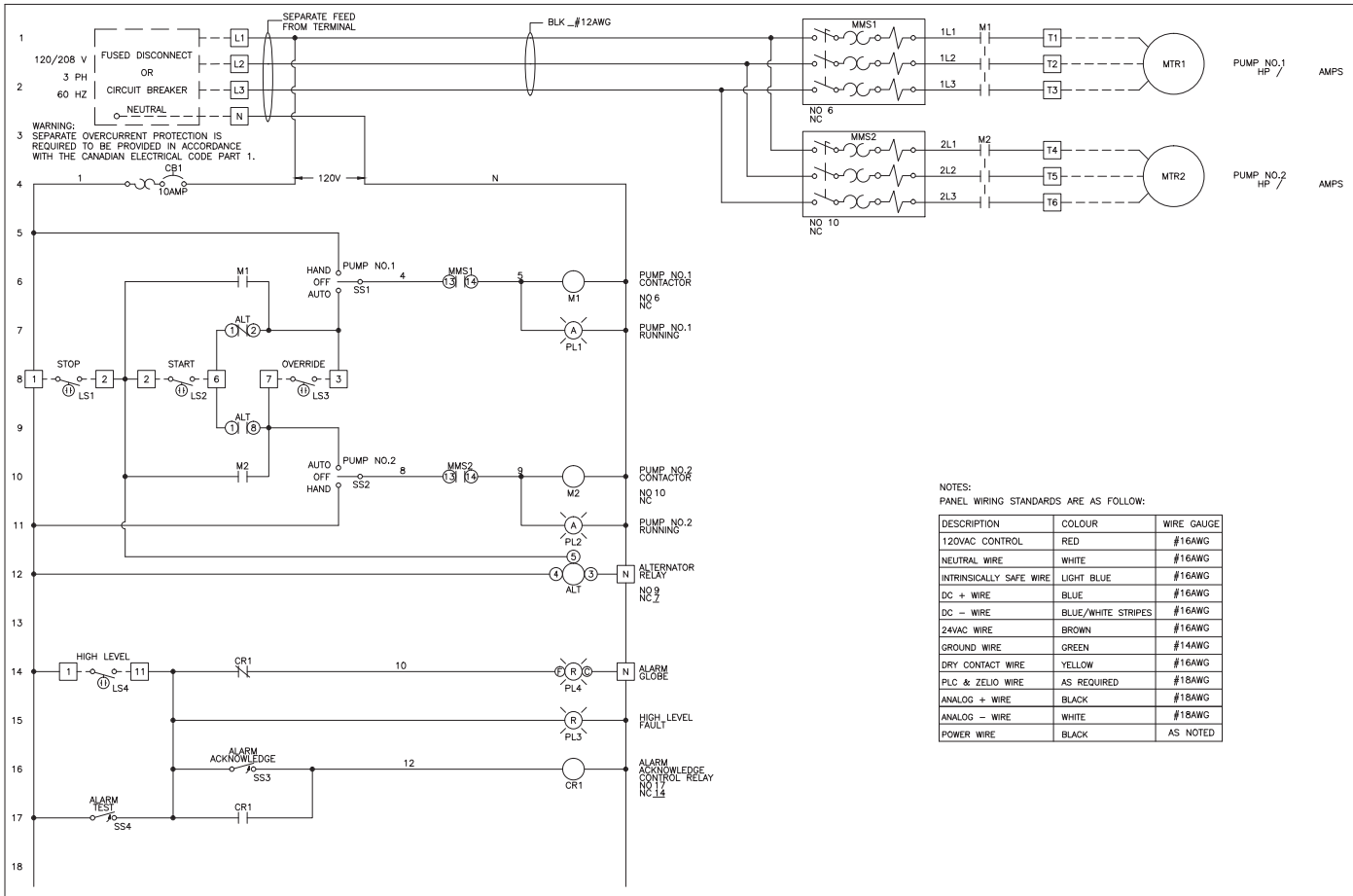

NOTES:
PANEL WIRING STANDARDS ARE AS FOLLOW:

DESCRIPTION	COLOUR	WIRE GAUGE
120VAC CONTROL	RED	#16AWG
NEUTRAL WIRE	WHITE	#16AWG
INTRINSICALLY SAFE WIRE	LIGHT BLUE	#16AWG
DC + WIRE	BLUE	#16AWG
DC – WIRE	BLUE/WHITE STRIPES	#16AWG
24VAC WIRE	BROWN	#16AWG
GROUND WIRE	GREEN	#14AWG
DRY CONTACT WIRE	YELLOW	#16AWG
PLC & ZELIO WIRE	AS REQUIRED	#18AWG
ANALOG + WIRE	BLACK	#18AWG
ANALOG – WIRE	WHITE	#18AWG
POWER WIRE	BLACK	AS NOTED

Pentair Canada Inc
490 Pinebush Road, Unit #4
CAMBRIDGE, ONTARIO N1T 0A5
CANADA

CONTROL PANEL
DUPLEX PUMPS SK60
P-2.3 & P-2.4 , P-2.5 & P-2.6

REV	DESCRIPTION	BY	DATE	REV	DESCRIPTION	BY	DATE

REV'D | REF
DESIGNED I. MURRAY | SCALE N.T.S.
DRAWN I. MURRAY | CAD REF. PEN07398A-1
DATE JUNE 12, 2018 | SHT NO. 1 OF 2

TITLE
DUPLEX PUMP CONTROL SYSTEM
MODEL NO. CP15-03DW

DWG NO. PS617- . | REV 0

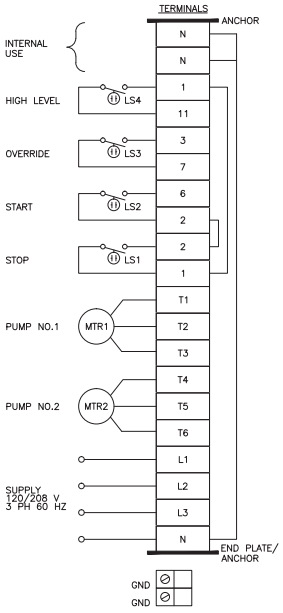

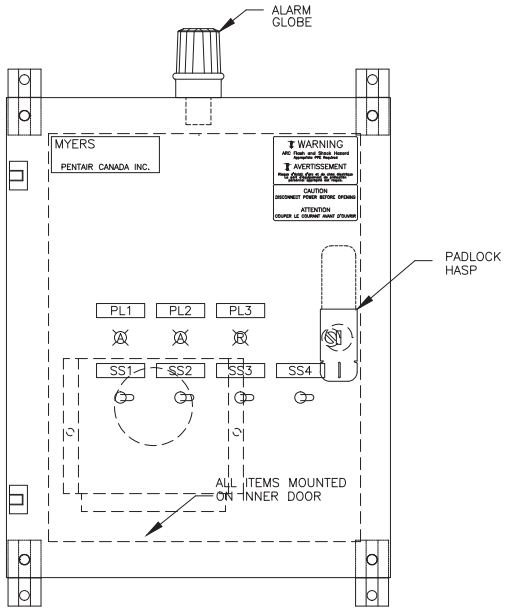

EEMAC 4X PAINTED STEEL ENCLOSURE 20" X 16" X 8"

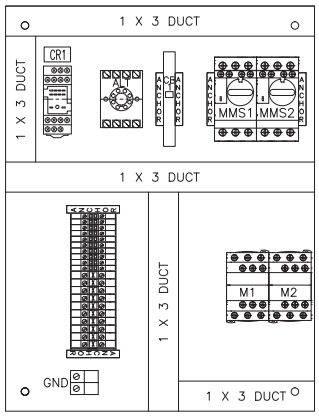

PANEL LAYOUT

Pentair Canada Inc 490 Pinebush Road, Unit #4 CAMBRIDGE, ONTARIO N1T 0A5 CANADA		CONTROL PANEL							REV'D	REF		TITLE	DUPLEX PUMP CONTROL SYSTEM MODEL NO. CP15-03DW
		DUPLEX PUMPS SK60							DESIGNED I. MURRAY		SCALE 1/4" = 1"		
		P-2.3 & P-2.4 P-2.5 & P-2.6							DRAWN I. MURRAY		CAD REF. PEN07398A-2		
	REV	DESCRIPTION	BY	DATE	REV	DESCRIPTION	BY	DATE	DATE JUNE 12, 2018		SHT NO. 2 OF 2	DWG NO. PS617- .	REV 0

CSB4-SS

FLOAT BRACKET FOR MOUNTING UP
TO (4) FOUR CONTROLS

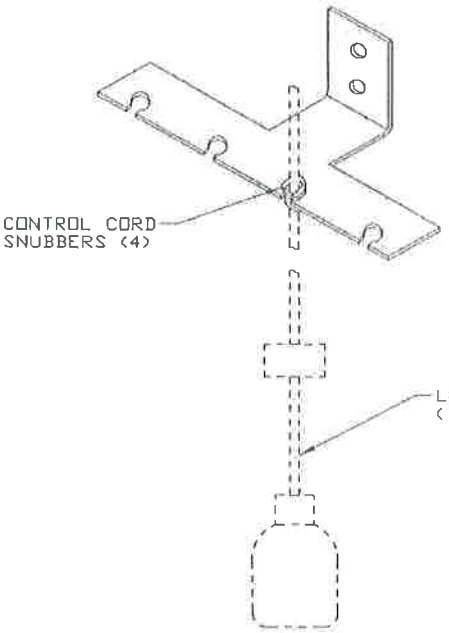

bracket is 11' wide
and 4" deep 3" high

CSB5-SS

FLOAT BRACKET FOR MOUNTING UP
TO (5) FIVE CONTROLS

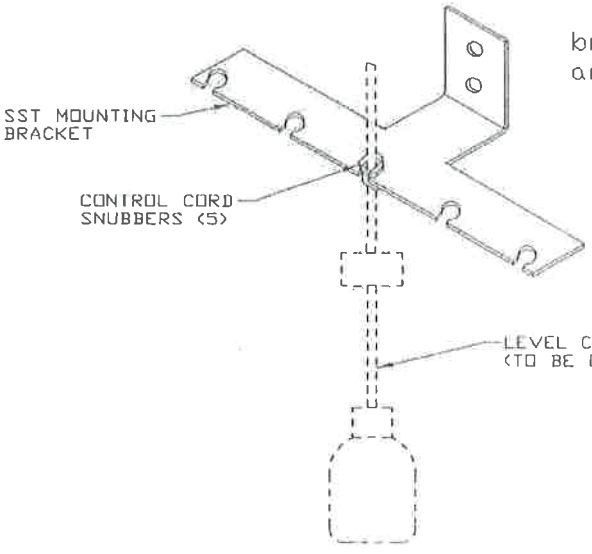

bracket is 14' wide
and 4" deep 3" high

ES-2365A

SJE SIGNALMASTER® Control Switch

Mechanically-activated, narrow-angle float switch designed to activate pump control panels and alarms.



This narrow-angle sensing device is used to accurately monitor liquid levels in:

- water
- sewage applications

The SJE SignalMaster® control switch is not sensitive to rotation.

Normally Open Model (high level)
The control switch turns on (closes) when the switch tips slightly **above** horizontal signaling a high level, and turns off (opens) when the switch drops slightly below horizontal.

Normally Closed Model (low level)
The control switch turns on (closes) when the switch tips slightly **below** horizontal signaling a low level, and turns off (opens) when the switch tips slightly above horizontal.

FEATURES

- Mechanically-activated, snap action contacts.
- High impact, corrosion resistant, polypropylene float housing.
- Not sensitive to rotation.
- Control differential of 1.5 inches (4 cm) above or below horizontal.
- Yellow colored cap for easy identification of normally open control switch.
- White colored cap for easy identification of normally closed control switch.
- UL Listed for use in water and sewage.
- CSA Certified.
- Five-year limited warranty.

SSPMA MEMBER

LR54245

LISTED 83N2

Member of: Hydraulic Institute

SPECIFICATIONS

CABLE: flexible 18 gauge, 2 conductor (UL, CSA) SJOW, water-resistant (CPE)

FLOAT: 2.74 inch diameter x 4.83 inch long (7.0 x 12.3 cm) high impact, corrosion resistant, polypropylene housing for use in sewage and water up to 140°F (60°C)

MAXIMUM WATER DEPTH: 30 feet (9 meters), 13 PSI (90 kPa)

ELECTRICAL: 5 amp, 125/250 VAC, 50/60 Hz

NOTE: This switch is not recommended for controlling:

- electric loads less than 100 milliamps, 12 VAC
- non-arcing electric loads

OPTIONS

This switch is available:

- CE certified unit available upon request.
- for normally open (high level) applications or normally closed (low level) applications.
- in standard cable lengths of 10, 15, 20, or 30 feet and 3, 5, 6, or 10 meters (longer lengths available)
- with two mounting options that allow for flexibility in installation:

  Mounting Clamp: for applications where the switch can be attached to a discharge pipe or similar mounting device.

  Externally Weighted: for applications where the switch can be suspended from above.

SEE BACKSIDE FOR ORDERING INFORMATION.
SEE PRICE BOOK FOR LIST PRICE.

SJE Rhombus®
PO Box 1708, Detroit Lakes, MN 56502
1-888-DIAL-SJE • 1-218-847-1317
1-218-847-4617 Fax
email: customer.service@sjerhombus.com
www.sjerhombus.com

SJE SIGNALMASTER® Control Switch

Mechanically-activated, narrow-angle float switch designed to activate pump control panels and alarms.

ORDERING INFORMATION

Normally Open		Normally Closed		Shipping Weight
Part #	**Description**	**Part #**	**Description**	
1006042	10SGMPCNO	**1006046**	10SGMPCNC	1.04 lbs.
1006050	10SGMWENO	**1006054**	10SGMWENC	2.13 lbs.
1006043	15SGMPCNO	**1006047**	15SGMPCNC	1.37 lbs.
1006051	15SGMWENO	**1006055**	15SGMWENC	2.45 lbs.
1006044	20SGMPCNO	**1006048**	20SGMPCNC	1.69 lbs.
1006052	20SGMWENO	**1006056**	20SGMWENC	2.70 lbs.
1006045	30SGMPCNO	**1006049**	30SGMPCNC	2.34 lbs.
1006053	30SGMWENO	**1006057**	30SGMWENC	3.43 lbs.

PC = **P**ipe **C**lamp **WE** = **W**eighted **E**xternally **NO** = **N**ormally **O**pen **NC** = **N**ormally **C**losed
NOTE: Descriptions are grouped by cable length measured in feet (10, 15, 20, 30).
SEE PRICE BOOK FOR LIST PRICE.

OPTIONS

MOUNTING CLAMP
is standard - deduct optional

PACKAGING
Bagged - standard.
Boxed - optional
Bulk - optional

ADDITIONAL CABLE
Longer cable lengths available. Please call for details.

UL Listed for Water & Sewage

LISTED 83N2 LR54245

SSPMA MEMBER

SPECIFICATIONS

CABLE: flexible 18 gauge, 2 conductor (UL) SJOW, water-resistant (CPE)

FLOAT: 2.74 inch diameter x 4.83 inch long (7 x 12.3 cm), high impact, corrosion resistant polypropylene for use in sewage and water up to 140°F (60°C)

MAXIMUM WATER DEPTH: 30 feet (9 meters), 13 psi

ELECTRICAL: 5 amp, 125/250 VAC, 50/60 Hz

This switch is not recommended for controlling:

- electric loads less than 100 milliamps, 12 VAC
- non-arcing electric loads

OTHER INFORMATION

NORMALLY OPEN (high level) OPERATION
The control switch closes (turns on) when the float tips slightly **above** horizontal signaling a high level, and opens (turns off) when the float drops slightly **below** horizontal in water or sewage applications.

NORMALLY CLOSED (low level) OPERATION
The control switch closes (turns on) when the float tips slightly **below** horizontal signaling a low level, and opens (turns off) when the float tips slightly **above** horizontal in water or sewage applications.

Call or fax your order!
1-888-DIAL-SJE (1-888-342-5753) Fax 218-847-4617

SJE Rhombus®
www.sjerhombus.com
customer.service@sjerhombus.com

9500115A

© SJE-Rhombus 07/16

FLOAT ACCESSORIES

Cable Clamp Assembly, Float Brackets, Pipe Mounting Bracket, Cable Weights, ETM w/ Piggy-Back Plug, Vertical Reed Switch, Anchor and Chain

CABLE WEIGHT

Provides an accurate pivot point for suspended float switches.



U.S. Patent 5,306,885

- Gripper teeth on clip and weight channel securely lock float cable into place
- Cable Weight can be adjusted without the use of tools

HOUSING: 1 pound, 12 ounce (0.8 kgs.), 2.8 inch diameter x 3.3 inch long (7.1 cm diameter x 8.4 cm), impact resistant, non-corrosive, PVC housing for use in liquids up to 140°F (60°C).

CLIP: injection molded acetal plastic
WIRE/CABLE ACCOMMODATED: SJOW, SJTW, 18/2, 18/3, 16/2, 16/3, 14/2 and 14/3
SHIP WEIGHT: 2 lbs. (.907 kgs)

Part Number	Description
1002230	Cable Weight

CABLE WEIGHT MINI

Provides an accurate pivot point for suspended float switches.



- One piece cable weight
- Turn and Lock for easy installation.

HOUSING: 9.6 ounces (0.27 kgs.), 2.5 inch diameter x 2.5 inch long (6.35 cm diameter x 6.35 cm), impact resistant, non-corrosive, PVC housing for use in liquids up to 140°F (60°C)
WIRE/CABLE ACCOMMODATED: SJOW, SJTW, 18/2, 18/3

Part Number	Description
1030356	Cable Weight Mini

ELAPSED TIME METER WITH PIGGY-BACK PLUG

Plugs into switched outlet or piggy-back switch of plugger control panel. Unit must be placed inside an enclosure.



- Screws and mounting adhesive included.

Part Number	Description
1022846	ETM w/120V piggy-back plug
1032834	ETM w/230V piggy-back plug

VERTICAL REED SWITCH



- Control differential: .375 inch (1 cm)
- Maximum angle from vertical: 5°
- Electrical: 250 mAmps, 12-125 VAC, 50/60 Hz
  500 mAmps, 6-12 VDC, 50/60 Hz
- Housing and Float: 1.60 inch diameter x 6.7 inch long (4.06 cm X 17.01 cm), high impact, corrosion resistant PVC for use in sewage and non-potable water up to 120°F (50°C)

Part Number	Description
1011027	10ft VRS 120V Bulk
1016561	15ft VRS 120V Bulk

ANCHOR



- 10 lb. weight
- Yellow, vinyl coated, mushroom style

Part Number	Description
1018687	10 lb. Mushroom Anchor

CHAIN



- 1/8" thickness
- 316 grade stainless steel
- Available in one foot increments

Part Number	Description
1018823	1/8 inch Chain

PRODUCTS CONTINUED ON NEXT PAGE.
SEE PRICE BOOK FOR LIST PRICES.

SJE Rhombus®
PO Box 1708, Detroit Lakes, MN 56502
1-888-DIAL-SJE • 1-218-847-1317
1-218-847-4617 Fax
email: sje@sjerhombus.com
www.sjerhombus.com

Ball Check Valve

Model 208T

Sizes 1" Thru 2"/ 25mm thru 50mm

FLOMATIC®
Flomatic Corporation

Materials

NOTE: PLASTIC VALVES SHOULD NOT BE BURIED UNDERGROUND

LOW-LEAD IAPMO R&T NSF/ANSI 372 #1 Pb Lead-Free

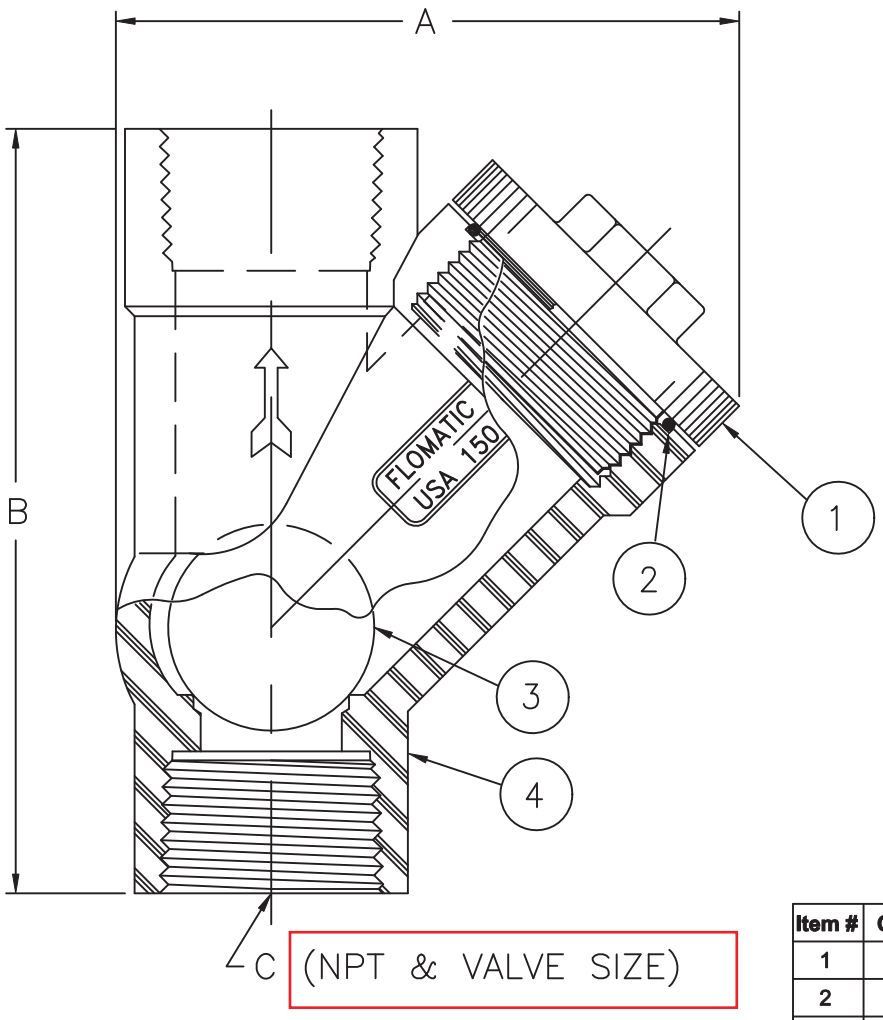

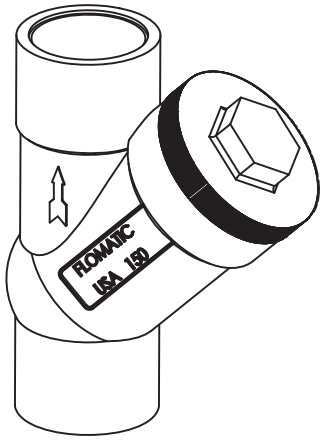

Item #	Qty	Description	Material
1	1	Cap	PVC
2	1	O'Ring	Buna-n
3	1	Ball (Sinking)	Buna-n
4	1	Body	PVC
5	2	Bushing (not shown)*	PVC

*Uses bushing not shown
Max Temp 150°F (65°C)
Max Inlet Pressure 100 psi (7 bar)

Dimensions

Size		Part #	A		B		Weight	
inch	mm		inch	mm	inch	mm	lbs	kg
1*	25	2131-T*	4-1/2	114	6-27/32	174	1	.45
1-1/4	32	2132-T	4-1/2	114	5-21/32	144	1	.45
1-1/2*	40	2133-T*	6-11/32	161	8-13/64	208	2	.91
2	50	2134-T	6-11/32	161	7-1/16	179	2	.91

Flomatic Corporation can accept no responsibility for possible errors in catalogues, brochures and other printed material. Flomatic Corporation reserves the right to alter its products without notices. This also applies to product already agreed. All trademarks in this material are property of the respective companies. All right reserved. ©2016 Flomatic Corporation. The drawings & information on this drawing sheet are the sole & exclusive property of Flomatic Corporation. Any reproduction, distribution, display or use of these drawings or information in whole or in part without written authorization of Flomatic Corporation is strictly prohibited.

FLOMATIC® VALVES

November 1, 1991
Dwg No:S2131-34 Rev: L (11/16)

FLOMATIC CORPORATION
GLENS FALLS, N.Y. 12801
PHONE (518) 761-9797
FAX (518) 761-9798

COMPACT PVC / CPVC BALL VALVES

PVC Ball Valves

0929 Series 1/2" - 4" Threaded (FPT)
0929S Series 1/2" - 4" Slip

- 150 PSI Working Pressure @ 73°F (22°C)
- Temperature Rating: 32°F to 122°F (0°C to 50°C)
- EPDM Seats/EPDM O-ring Seal
- White PVC Molded Body with Black PVC Handle

PVC Ball Valves

0921 Series 1/2" - 4" Threaded (FPT)
0921S Series 1/2" - 4" Slip

- EPDM Seats/EPDM O-Ring Seal
- White PVC Body with Black PVC Handle
- NSNSF/ANSI Standard 61 & 372 Certified

0923 Series 1/2" - 2" Threaded (FPT)
0923S Series 1/2" - 2" Slip

- 150 PSI Working Pressure @ 73°F (22°C)
- Temperature Rating: 41°F to 122°F (5°C to 50°C)
- PTFE Seats/Viton O-ring Seal
- White PVC Body with Red PVC Handle

Refer to Temperature Correction Factors

NO LEAD LEAD-FREE — Third Party Certified to NSF / ANSI 372



CPVC Hot Water System Ball Valves

0922CTS Series 1/2" - 2" Threaded (CTS x CTS)

- 150 PSI Working Pressure
- Temperature Rating: Continuous 194°F (90°C)
  Short Hours 212°F (100°C)
- PTFE Seats/EPDM O-ring Seal
- Beige CPVC Molded Body with Red Handle
- NSF/ANSI Standard 61 & 372 Certified

UNION PVC BALL VALVES

PVC Blocked True Union Ball Valves

0924 Series 1/2" - 2" Threaded (FPT)

- Double Union/Double block design permits in-line maintenance without disconnecting pipe
- Bayonet style locks prevent ball from being blown out
- Handle equipped with removable spanner devise
- Full unobstructed flow without any turbulence or pressure drop
- Working Temperature Range: 41°F to 122°F (5°C to 50°C)
- 150 PSI Working Pressure at 73°F (22°C)
- EPDM O-rings
- Suitable for both schedule 40 & 80 PVC pipe

Shipped complete with both thread and slip interchangeable connections



NO LEAD LEAD-FREE — Third Party Certified to NSF / ANSI 372

PVC Blocked True Union Ball Valves

0925NL Series 1/2" - 4" EPDM "O" RING SEAL ← 2"
0926 Series 1/2" - 4" VITON "O" RING SEAL

- 2-Way Blocking True Union Ball Valve - 150 PSI Working Pressure @ 73°F (22°C)
- Unique Double Union/Double Block design permits in-line maintenance without disconnecting pipe
- Both ends blocked with bayonet-style locks which prevent ball from being blown out
- Handle equipped with removable spanner device
- Full, unobstructed flow without any turbulence or pressure drop
- Available with either EPDM or Viton "O"-ring seals
- Self Lubricating PTFE (polytetrafluoroethylene) Seats are corrosion and chemical resistant
- Quick and easy disassembly without use of special tools, hand tighten only
- Suitable for both schedule 40 & 80 PVC pipe

PVC Single Union Ball Valves

0933 Series 1-1/2" - 2" Threaded (FPT)
0933S Series 1-1/2" - 4" Slip

- Threaded or socket
- Working Pressure 150 PSI @ 73°F
- Lightweight and compact design suitable for plumbing, pool and spa field
- PTFE (polytetrafluoroethylene) seat is corrosion and chemical resistantto most chemicals
- Non blocking design
- Suitable for both schedule 40 & 80 PVC pipe

Mécanique Nordique
Plumbing
Heating
Ventillation
mecanique.nordique@hotmail.com
1255 Rue J.A.Bombardier Lévis QC G7A 2P4
Tél : (418) 496-1109 Fax : (418) 496-3803

REVIEWED BY CONTRACTOR
Kudlik Construction Ltd.
NAME: Sandra Rousseau P.Eng
DATE: Jun 26, 2018

IQUALUIT WWTP UPGRADES

DRAWING FOR APPROVAL

ENGINEER: **NUNAMI STANTEC LIMITED**

This shop drawing review stamp applies to the following shop drawings:
EW-1: Haws Model 7501 Eyewash
FD-1: Zurn ZN-211-B floor drain
FD-3: Zurn Z546 floor drain
HB-2: Charland Thermojet NL-533-BV-VB-075-P12X12-41 hose bibb, 5/8"hose, and T-70 spray gun
WC-1: American Standard 2467.016 Water Closet
DCE-1: Strike First WBDL-ABC340LV
DCE-2: Strike First WBDL-ABC10

DRAWING #: AD-017

Section	: 22 42 01 & 22 42 03
Article	:
Plans	: M-801 PLUMBING FIXTURES SCHEDULE
Application	: PLUMBING FIXTURES
Brand	: AMERICAN STANDARD , MOEN , ZURN
Model	:
Revised #	:
Supplyer	: DESCHENES
Date	: **19/06/2018**
By	: Martin Boucher

LV-1 to be revised per SI-003

STANTEC PROJECT #: 110126045
SUBMITTAL # AD-017

This review by Stantec is for general conformance with the design concept of Stantec's design of the:
☐ Architectural ☐ Structural ☑ Mechanical ☐ Electrical ☐ Other

component(s) only and does not mean that Stantec has verified or approves the shop drawing(s). The Contractor remains solely responsible for the shop drawing(s) and this review by Stantec does not relieve the Contractor of the Contractor's responsibility for errors or omissions in the shop drawing(s) or for meeting all requirements of the contract documents. This review does not mean that Stantec approves the detailed design inherent in the shop drawing, responsibility for which shall remain with the Contractor submitting same, nor does this review mean that Stantec accepts any deviation of the shop drawing(s) from the contract documents. The Contractor is responsible for confirming all dimensions and correlating them at the job site, for all construction means, methods and techniques, and for coordination of construction work of all trades, including coordination of all shop drawings.

Stantec

☐ REVIEWED
☑ REVIEWED, AS NOTED
☐ REVISE AND RESUBMIT
☐ NOT REVIEWED

DATE 2018-07-04
BY Brendan Zrum, P.Eng

SPEC 22 42 01 2.13 TAG : EW-1

model 7501

Portable Gravity Fed Eyewash

FEATURES & BENEFITS

CONSTRUCTION

FDA approved high-density green polyethylene tank provides the light and durable construction required in a portable unit.

MOUNTING

J-shaped stainless steel wall bracket makes for a well constructed portable mount for easy removal and re-mount.

FLOW CONTROLS

Pulling down the eyewash arm will begin flushing the 9-gallon (34.1 L) portable tank at .4 gpm (1.5 L) for a full 15 minutes, creating a full patterned flushing of the eyes.

DESIGN

Tank comes complete with a wide-fill opening and threaded cap for quick inspection, cleaning, and filling. Unit also comes equipped with top and side handles making relocation easy.



OPTIONS

- ☐ Water Additive: Model 9082, 'sterile' bacteriostatic preservative for use in portable eyewash stations. One 5 oz. (148 ml) bottle will preserve 5 to 20 gallons (18.9 to 75.7 L) of potable water for up to three months. Four bottles per carton.
- ☐ Waste Container: Model 9009 is a twenty-gallon (75.7 L) wastewater container constructed of tough yellow polymer resin. Unit is used to collect water during weekly testing of emergency equipment.

For more information, visit www.hawsco.com or call (888) 640-4297.

SPECIFICATIONS

Model 7501 portable gravity operated eyewash shall include a FDA approved high-density green polyethylene 9 gallon (34.1 L) tank, ABS plastic eyewash heads with .4 gpm (1.5 L) flow rate over 15 minutes, yellow pull-down activation arm, integral handle on top, wide-fill threaded cap, sign-mounted operating instructions, and stainless steel wall bracket (unit must be hung). Additive not included - Order separately.

APPLICATIONS

Where the eyes of any person may be exposed to injurious or corrosive materials, when suitable facilities for quick flushing of the eyes needs to be provided and a continuous supply of water is not available. Although the 7501 may be installed in a wide variety of locations, it is ideal for remote areas where protective measures are still needed. Emergency eyewash equipment shall be in unobstructed and accessible locations that require no more than 10 seconds for the injured person to reach. Model 7501 is certified by CSA to meet the ANSI Z358.1 Standard for Emergency Eyewash and Shower Equipment.

DISCLAIMER: Continued product improvements make specifications subject to change without notice. Check www.hawsco.com for the latest product information and updates.

THIS DOCUMENT IS TRUE AND CORRECT AT TIME OF PUBLICATION. CONTINUED PRODUCT IMPROVEMENTS MAKE SPECIFICATIONS AND MEASUREMENTS SUBJECT TO CHANGE WITHOUT NOTICE.

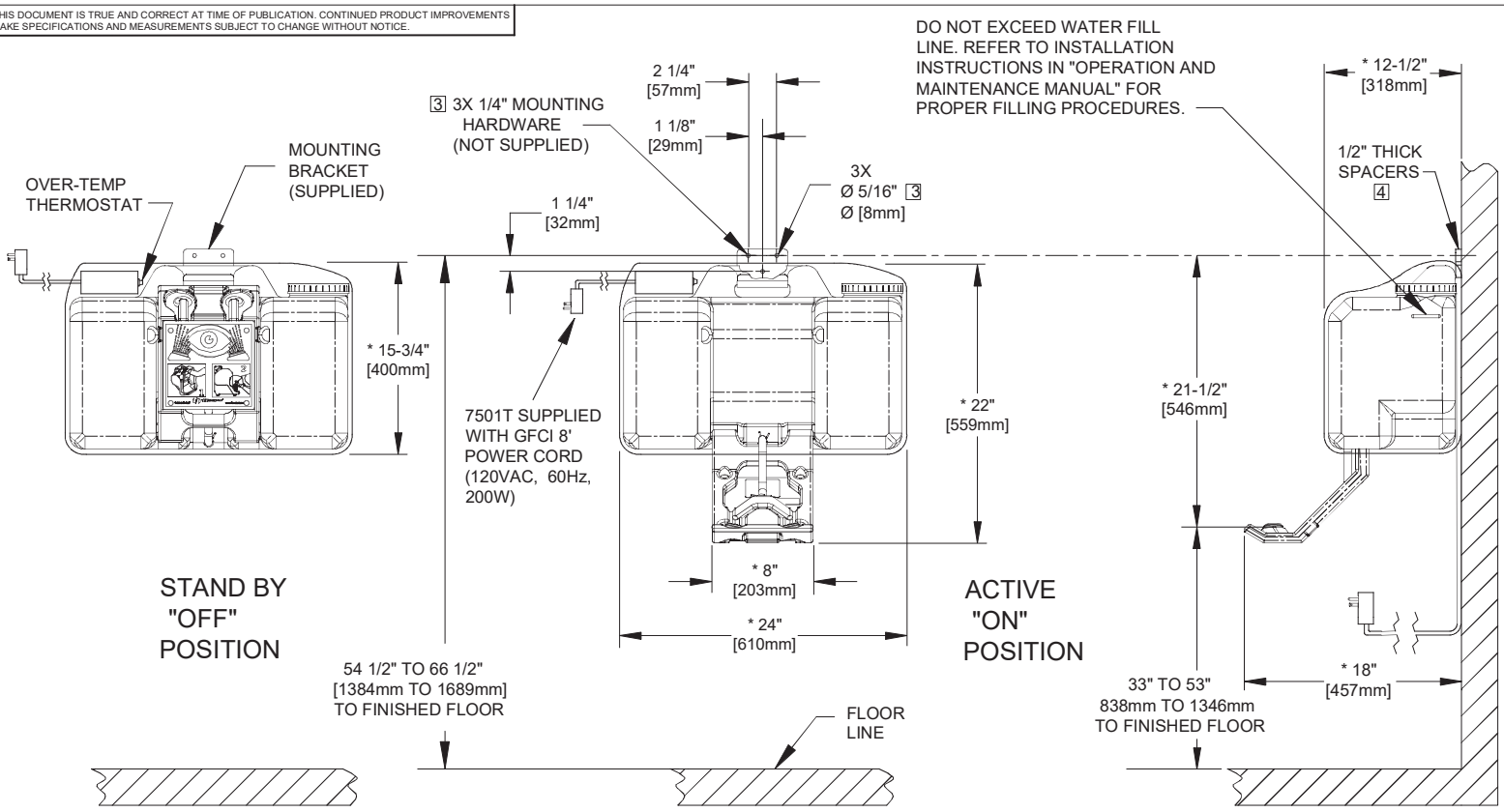

NOTES: (CONTINUED FROM SHEET 1 OF 2)

4 LOCATE ONE 1/2" THICK SPACER (QTY. 3 SUPPLIED) BEHIND EACH HOLE IN THE MOUNTING BRACKET AS SHOWN.

5. * DIMENSIONS MAY VARY ±1/2" [12.7mm].

6. **UNIT MUST BE FILLED WITH WATER BEFORE CONNECTING TO POWER SOURCE.**

(FOR MODELS 7501T240 & 7501BL240:)

7. CORD SET SHALL BE LISTED TO UL 817 AND CSA-C22.2 NO. 21 AND PROVIDED WITH 3 WIRE GROUNDING TYPE ATTACHMENT PLUG RATED 240 V, MIN. 15 A.
8. THE FLEXIBLE CORD TYPE SHALL BE TYPE S, SE, SJ, SJE, SJO, SJOO, SJT, SJTO, SJTOO, SO, SOO, ST, STO, OR STOO AND HAVE A TYPE LETTER SUFFIX OF "W," "W-A" OR "OUTDOOR."
9. THE CORD SET SHALL BE MIN. 6 FT IN LENGTH AND MIN 18 AWG SIZE FOR FLEXIBLE POWER SUPPLY CORD.
10. LISTED STRAIN RELIEF BUSHING SUITABLE FOR CORD SET SIZE AND OUTDOOR USE SHALL BE USED.
11. THE FIELD INSTALLED POWER SUPPLY CORD SET NEEDS TO BE INSTALLED BY QUALIFIED PERSONNEL.

MOUNTING DETAIL FOR:

MODELS 7501T/7501TH/7501T240/7501T240H - WITH HEATED BLANKET (SHOWN)

MODEL 7501 (SEE SHEET 1 OF 2)

Haws®
1455 KLEPPE LANE
SPARKS, NEVADA 89431
(775) 359-4712 FAX (775) 359-7424
E-MAIL: HAWS@HAWSCO.COM
WEBSITE: WWW.HAWSCO.COM

ECN NO.	REVISED PER	BY:
5086	ECN: 5139	CC
DRAWN:	DATE:	CHK'D.:
MJ	06/30/16	VWC
APPROVED:	DATE:	
FV	09/21/16	

MODEL(S)
PORTABLE EYEWASH
7501/7501T/7501TH/7501T240/7501T240H

PART NUMBER 0002080045.D
REVISION 15

SCALE: 1:1 | DRAWING TYPE: INSTALLATION | SIZE: A | SHEET 2 OF 2

©2016 Haws Corporation - All Rights Reserved. HAWS® and other trademarks used in these materials are the exclusive property of Haws Corporation.

ZN-211-B
BODY ASSEMBLY
WITH "TYPE B" STRAINER

SPECIFICATION SHEET

TAG FD-1

Dimensional Data (inches and [mm]) are Subject to Manufacturing Tolerances and Change Without Notice

SPEC 22 42 01 2.1

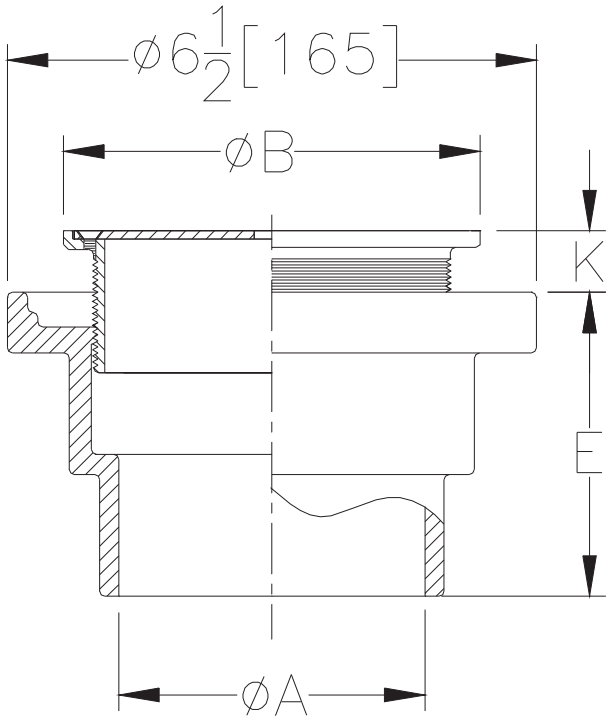

Str. Desig.	Dimensions In Inches / [mm] A Pipe Size	B Str. Dia.	K Min.	K Max.	Approx. Wt. Lbs. / [kg]	Strainer Open Area Sq. In. / [sq cm]
-B5	2 - 3 - 4 [51 - 76 - 102]	5 [127]	1/4 [6]	1-1/4 [32]	7 [3]	8 [52]
-B6	2 - 3 - 4 [51 - 76 - 102]	6 [152]	1/4 [6]	1-1/4 [32]	7 [3]	9 [58]
-B7	2 - 3 - 4 [51 - 76 - 102]	7 [178]	1/4 [6]	1-1/4 [32]	8 [4]	12 [77]
-B8	2 - 3 - 4 [51 - 76 - 102]	8 [203]	1/4 [6]	1-1/4 [32]	9 [4]	18 [116]

ENGINEERING SPECIFICATION: ZURN ZN-211-B Floor and Shower Drain, Dura-Coated cast iron body with bottom outlet, adjustable "Type B" polished nickel bronze round strainer.

OPTIONS (Check/specify appropriate options)

PIPE SIZE

2,3,4 [50,75,100]

(Specify size/type) **OUTLET**

NH No-Hub

E BODY HT. DIM.

3 3/4 [95]

SUFFIXES

____	-G	Galvanized Cast Iron
____	-P	1/2" [13] Trap Primer Connection
____	-VP	Vandal-Proof Secured Top
____	-X	Squeezin Backwater Valve
less	-Y	Sediment Bucket
____	-210	8" [203] Wide Flange Body
____	-210-WD	8" [203] Wood Deck Drain

*REGULARLY FURNISHED UNLESS OTHERWISE SPECIFIED

REV.	DATE: 11/15/99	C.N. NO. 83322
DWG. NO. 63610	PRODUCT NO. ZN-211-B	

ZURN INDUSTRIES LIMITED ♦ 3544 Nashua Drive ♦ Mississauga, Ontario L4V 1L2 ♦ Phone: 905/405-8272 Fax: 905/405-1292
In the U.S.: ZURN INDUSTRIES, INC. ♦ SPECIFICATION DRAINAGE OPERATION ♦ 1801 Pittsburgh Ave. ♦ Erie, PA 16514
Phone: 814/455-0921 ♦ Fax: 814/454-7929 ♦ World Wide Web: www.zurn.com

TRAP GUARD DRAIN INSERT PROTECTION

CAN BE USED ABOVE OR BELOW GROUND FLOOR

TRAP GUARD INSERT FITTING FITS
INSIDE OF CAST IRON OR PLASTIC PIPE

REVIEWED
by MV

SPEC 22 42 01 2.2

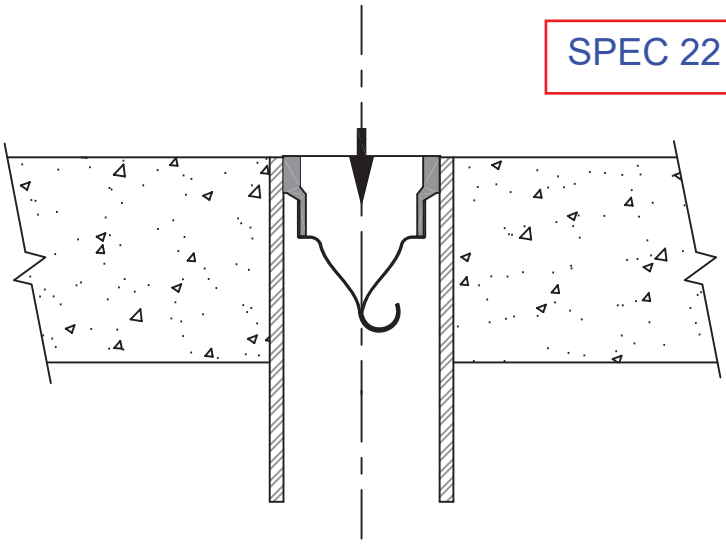

- ☐ PART NO. TG22IP 2" INSERT FITS INSIDE 2" CAST IRON PIPE
- ☐ PART NO. TG22P 2" INSERT FITS INSIDE 2" PVC OR ABS PIPE
- ☐ PART NO. SG22P 2" SUDS GUARD FITS INSIDE 2" PVC OR ABS PIPE
- → ☐ PART NO. TG33IP 3" INSERT FITS INSIDE 3" PVC, ABS OR CAST IRON PIPE
- ☐ PART NO. TG33-WADE 3" INSERT FITS INSIDE 3" WADE DRAIN TAILPIECE.

FOR TRAP GUARDS INSERTING INTO GASKET CONNECTED DRAINS, SEE DRAWING TG-23-G

IMPORTANT NOTES :

1. This insert can be installed into any open ended pipe to prevent sewer gas emission.
2. They can be inserted into an open end pipe that connects larger top floor drains.
3. They can be inserted into open ended pipe that connects floor sinks or hub drains,
4. To make a watertight seal, use an adhesive type caulk under the top flange or if the pipe opening is PVC, a small amount of solvent cement can be used under the flange.

If the trap guard device should get damaged or impaired in any way, the device can be easily removed by using a sharp screw driver under the flange.

Note: Care should be taken not to touch the elastomeric flexible material with the primer.

MAINTENANCE INSTRUCTIONS:

The Trap Guard device should be inspected periodically for build up of any type debris. The device should then be flushed out thoughly with clear warm water.

NO FIRE RATINGS ARE
REQUIRED FOR UNDERGROUND
PIPING OR OPENINGS

ProSet® SYSTEMS
FIRESTOP PENETRATOR™

DATE :
9-02-03

DRG . NO .
TG-23-IPD

NAMED FD-2 ON DRAWING M201
NAMED FD-3 ON DRAWING M801
PLUMBING FIXTURES SCHEDULE

Z546

21-1/2 [546] DIAMETER EXTRA-HEAVY-DUTY DRAIN

SPECIFICATION SHEET

TAG FD-2

Correct tag is FD-3, see SI-003

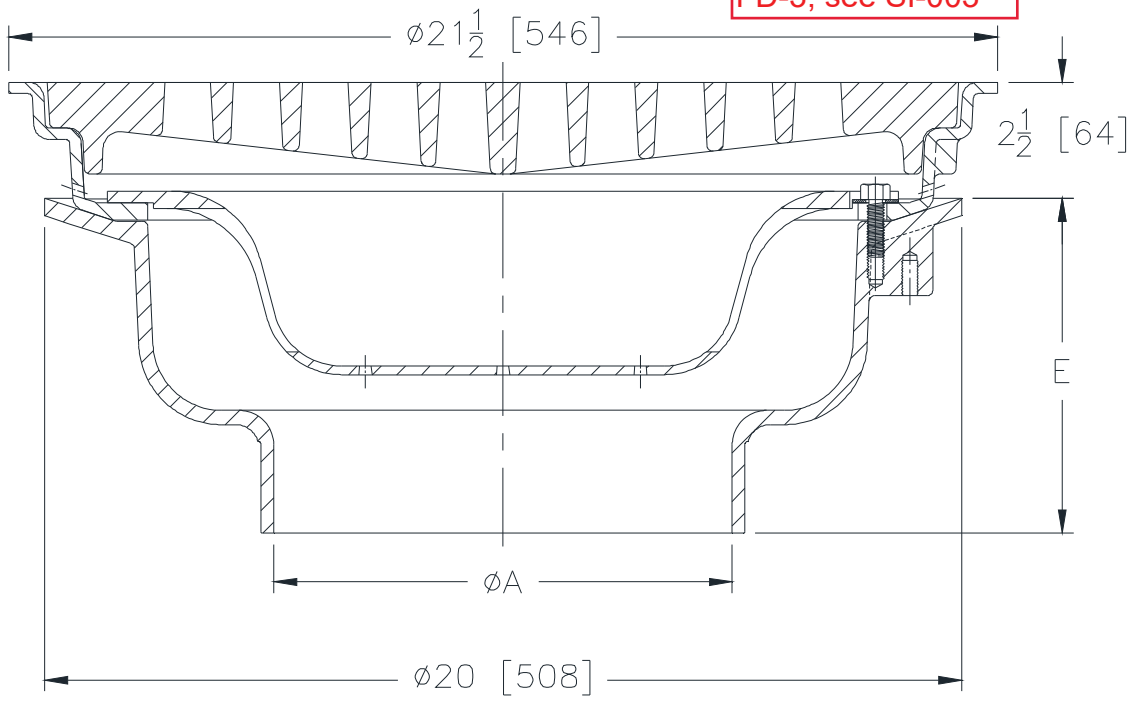

SPEC ON DRAWING M801 PLUMBING FIXTURES SCHEDULE

A - Pipe Size In [mm]	Approx. Wt. Lbs. [kg]	Grate Open Area Sq. In. [cm²]
8,10,12 [203,254,305]	163 [74]	110 [710]

ENGINEERING SPECIFICATION: ZURN Z546
21-1/2" [546mm] Diameter top drain, Dura-Coated cast iron body with bottom outlet, seepage pan and combination membrane flashing clamp and frame with seepage holes, extra-heavy-duty cast iron slotted grate with suspended sediment bucket.

OPTIONS (Check/specify appropriate options)

PIPE SIZE
8,10,12 [203,254,305]

(Specify size/type) **OUTLET**
____ NH No-Hub

'E' BODY HT. DIM.
7-5/16 [186]

PREFIXES
____ Z D.C.C.I. Body and Top*

less sediment bucket

SUFFIXES
____ -F Extension Frame (Specify total height req'd.)
____ -G Galvanized Cast Iron
____ -TS Top Secured with Slotted Screws
____ -VP Vandal-Proof Secured Top

* Regularly furnished unless otherwise specified.

Zurn Industries, LLC | **Specification Drainage Operation**
1801 Pittsburgh Avenue, Erie, PA U.S.A. 16502 · Ph. 855-663-9876, Fax 814-454-7929
In Canada | **Zurn Industries Limited**
3544 Nashua Drive, Mississauga, Ontario L4V 1L2 · Ph. 905-405-8272, Fax 905-405-1292
www.zurn.com

Rev. E
Date: 09/26/2017
C.N. No. 137914
Prod. | Dwg. No. Z546

CHARLAND THERMOJET INC
Mélangeurs et Stations à Boyaux - Mixer Unit and Hose Stations
16350 Boul. Gouin Ouest, Ste-Geneviève, Québec H9H 1E1
Tel : 1-800-624-4709 (514)624-4772 Fax : 624-4776
Courriel :charlandthermojet@videotron.ca Internet: www.charlandthermojet.com

REF : (7628)

PROJET : W.W.T.P IQALUIT

SPEC AND DRW FOR APPROVAL

WASHDOWN STATIONS TYPE : (HB-2)

MODEL: NL-553-BV-VB-41-12X12-30X063-RGT70S

CHARLAND THERMOJET INC
Mixers and hose stations
16350 Boul. Gouin Ouest, Ste-Geneviève, Québec H9H 1E1
Sans frais Tel : 1-800-624-4709 (514)624-4772 Fax : 624-4776
Courriel :info@charlandthermojet.com Web: www.charlandthermojet.com

REF: 7628

MODEL NL-553-BV-VB-075-P12X12-41
P/N: NL-553-035

Simple washing Station 3/4'' (19mm) for hot or cold water with ball valve and hose rack



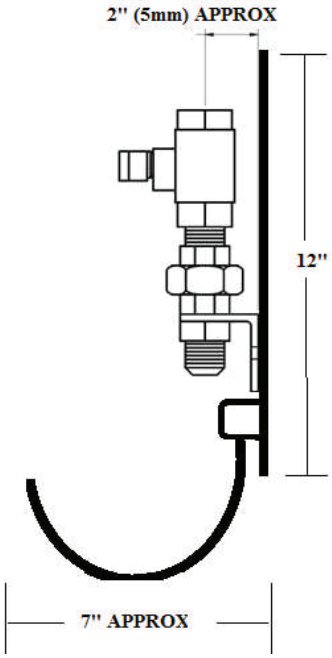

FEATURES

- Maximum operating pressure: 150 PSI (1034 kPa).
- Maximum operating temperature: 200°F (93°C).
- Required water pressure: 0 à 150 PSI (0 à 1034 kPa).
- High quality ball valve made of stainless steel.
- **Inlet 3/4'' (19mm) female NPT, Outlet 3/4'' (19mm) female NPT.**
- Rigid stainless steel bracket.
- Stainless steel plate 12'' (30.5mm) x 12'' (30.5mm) x 1/8''(.04 mm) finished # 4
- Stainless steel hose rack. Can hold up to 75 feet (22.9m) of 1/2'' (13mm) hose.

For more information or any question please contact us.

Developed and manufactured in Canada
Développé et maunfacturé au

CHARLAND THERMOJET INC
Mixing units, wash down and hoses stations
16350 Blv. Gouin Ouest, Ste-Geneviève, Québec H9H 1E1
Toll free : 1-800-624-4709 Tel : 514-624-4772 Fax : 514-624-4776
Email : charlandthermojet@videotron.ca Web : www.charlandthermojet.com

REF: 7628

INDUSTRIAL HOSES FOR GENERAL PURPOSE

High quality industrial hoses for general applications. Perfect for transporting air or liquids depending on the needs. Available in several size.



Applications :	General purpose for air or water line inside or outside.				
Cover :	Red smooth weather and abrasion resistant PVC.				
Reinforcement :	Multiple layers of synthetic yarns.				
Tube :	Black oil resistant PVC blend.				
Temperature :	- 30 °C to 70 °C (-22 °F to 160 °F).				
Nominal I. D.	**Nominal O. D.**	**PSI**	**WT. (pound)**	**Standard pkg**	**Part number**
1/4”	0.55”	250	0.13	300’	GP-025-250
3/8”	0.71”	250	0.19	300’	GP-038-250
1/2”	0.87”	250	0.27	300’	GP-050-250
5/8”	1.16”	250	0.42	300’	GP-063-250
1”	1.42”	200	0.54	300’	GP-100-200
1-1/4”	1.73”	150	0.64	100’	GP-125-150
1-1/2”	2.05”	150	0.74	100’	GP-150-150
2”	2.60”	150	1.01	100’	GP-200-150
Cut lengths :	Plus 5%				
Standard Lengths :	1/4” – 1” 50’/ 100’/ 300’. 1-1/4” – 2” 50’ / 100’.				
Recommended couplings	High pressure 1/2’’-1’’ for air service if working pressure exceeds 150 PSI. High pressure, short shank, universal, or combination nipples for all other sizes, or if used in water service.				



Provide 10m of hose for each hosebibb station

For more information or any questions please contact us.

CHARLAND THERMOJET INC
Mixing units, wash down and hoses stations
16350 Blv. Gouin Ouest, Ste-Geneviève, Québec H9H 1E1
Toll free : 1-800-624-4709 Tel : 514-624-4772 Fax : 514-624-4776
Email : charlandthermojet@videotron.ca Web : www.charlandthermojet.com

REF: 7628

T-70 SERIES

INDUSTRIAL AUTOMATIC SPRAY NOZZLE GUN

Ideal for many cleaning tasks in every kind of industrial plants. Easy to use.

NOZZLE GUN : For use with hot and cold water only.
Do not use with steam

T-70 MODEL



T-75 MODEL



T-77 MODEL



FEATURES

- Body made from brass casting. (Alse available in stainless steel in option.)
- Maximum operating pressure : 150 PSI (1034 kPa).
- Maximum operating temperature : 200 °F (93 °C).
- Flow rates : 5-7 GPM (18.9 – 26.5 l/min) under normal operating conditions 50-80 PSI (345 – 552 kPa), 10 GPM (37.9 l/min) @ 150 psi (1034 kPa).
- This gun does a better work with less water flow. The precision of construction of this gun allow the operator to have several types of water jets simply by pressing the handle. This model close automatically when the handle is released, which eliminate any water wasting.

WWTP IQUALUIT

SPEC 22 42 03 2.1 LV-1

TAG: LV-1

DECLYN™ WALL-HUNG LAVATORY
VITREOUS CHINA

DECLYN™ WALL-HUNG LAVATORY

Revised per SI-003

- Wall-hung sink
- Vitreous china
- Rear overflow
- Soap depression
- Faucet ledge

Shown with 2000.101 Ceramix faucet (not included)



❑ **0321.026** With wall hanger (Illustrated)
Faucet holes on 102mm (4") centers

❑ **0321.075** For concealed arms support
Faucet holes on 102mm (4") centers

Nominal Dimensions:
470 x 432mm
(18-1/2" x 17")

Bowl sizes:
362mm (14-1/4") wide
273mm (10-3/4") front to back
152mm (6") deep

Compliance Certifications -
Meets or Exceeds the Following Specifications:
• ASME A112.19.2 for Vitreous China Fixtures

To Be Specified:
❑ Color: ❑ White
❑ Faucet*:
❑ Faucet Finish:
❑ Supplies:
❑ 1-1/4" Trap:
❑ Nipple:
❑ Concealed Arms Support (by others):

* See faucet section for additional models available

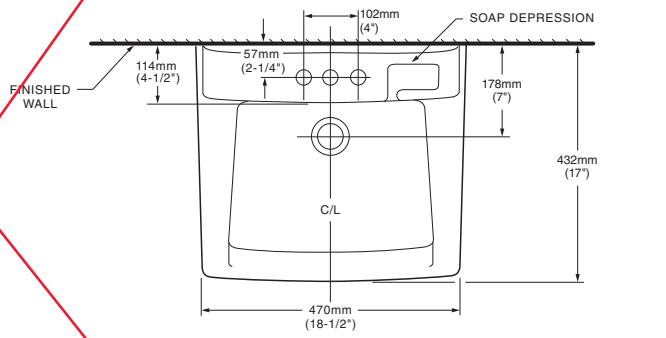

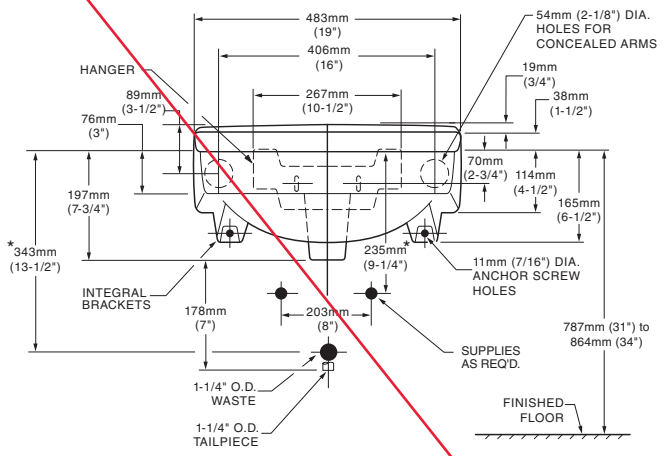

NOTES:
* DIMENSIONS SHOWN FOR LOCATION OF SUPPLIES AND "P" TRAP ARE SUGGESTED.
PROVIDE SUITABLE REINFORCEMENT FOR ALL WALL SUPPORTS.
FITTINGS NOT INCLUDED AND MUST BE ORDERED SEPARATELY.

IMPORTANT: Dimensions of fixtures are nominal and may vary within the range of tolerances established by ANSI Standard A112.19.2. These measurements are subject to change or cancellation. No responsibility is assumed for use of superseded or voided pages.

© 2014 AS America Inc.

PROJET : WWTP IQUALUIT

NOTE : MOEN 8425 DISCONTINUE

LV-1 : ROBINET

MOEN

Buy it for looks. Buy it for life.®

Specifications

There is more than 1 version of this model.
Page down to identify the version you have.

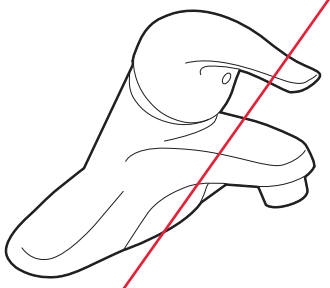

CHATEAU®
Single-Handle Lavatory Faucet

with Metal Waste Assembly
Model: L4625 series
L4631BC
Bulk Packed (12 per carton):
L64624 series

with 50/50 Waste Assembly
Bulk Packed (12 per carton):
L64625 series

Less Waste
Bulk Packed (12 per carton):
L64600 series

NOTE: THIS FAUCET IS DESIGNED TO BE INSTALLED THRU 3-1" DIA. HOLES, 2" ON CENTER

Revised per SI-003

DESCRIPTION
- Metal construction with various finishes identified by suffix
- Flexible supplies with 3/8" compression fittings
- Includes metal or 50/50 pop-up type waste assembly where noted

OPERATION
- Pivot action lever style handle
- Temperature controlled through 100˚ degree arc of handle travel

FLOW
- Flow is limited to 1.5 gpm max (5.7L/min) at 60 psi

CARTRIDGE
- 1255™ Duralast™ cartridge
- Nonmetallic/nonferrous and stainless steel material

STANDARDS
- Third party certified to WaterSense,® CSA B-125.1, ASME A112.18.1 and all applicable requirements referenced therein including NSF61/9
- Contains no more than 0.25% weighted average lead content
- Complies with California Proposition 65 and with the Federal Safe Drinking Water Act
- **ADA** for lever handle

WARRANTY
- Lifetime limited warranty against leaks, drips and finish defects to the original consumer purchaser
- 5 year warranty if used in commercial installations

WaterSense Meets EPA Criteria
Certified by IAPMO R&T

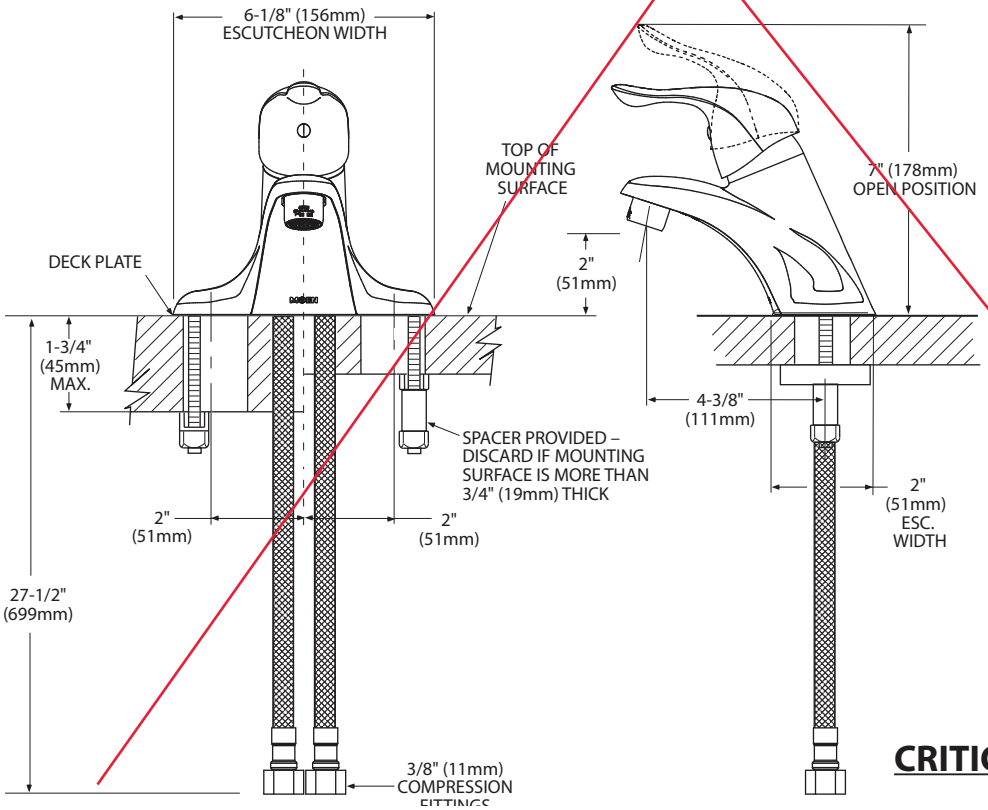

CRITICAL DIMENSIONS

(DO NOT SCALE)

Rev. 3/11

FOR MORE INFORMATION CALL: 1-800-BUY-MOEN
www.moen.com

MOEN

Buy it for looks. Buy it for life.®

Specifications

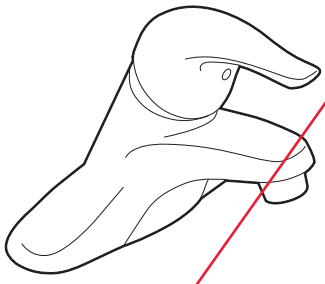

CHATEAU®
Single-Handle Lavatory Faucet

with Metal Waste Assembly
Model: L4625 series
L4631BC
Bulk Packed (12 per carton):
L64624 series

with 50/50 Waste Assembly
Bulk Packed (12 per carton):
L64625 series

Less Waste
Bulk Packed (12 per carton):
L64600 series

NOTE: THIS FAUCET IS DESIGNED TO BE INSTALLED THRU 3-1" DIA. HOLES, 2" ON CENTER

DESCRIPTION
- Metal construction with various finishes identified by suffix
- 16" long 3/8" tubing connections
- Includes metal or 50/50 pop-up type waste assembly where noted

OPERATION
- Pivot action lever style handle
- Temperature controlled through 180˚ degree arc of ha

Revised per SI-003

FLOW
- Flow is limited to 1.5 gpm max (5.7L/min) at 60 psi

CARTRIDGE
- 1225 cartridge design
- Nonmetallic/nonferrous and stainless steel material
- Can accommodate reversed piping and back to back installations

STANDARDS
- Third party certified to WaterSense,® CSA B-125.1, ASME A112.18.1 and all applicable requirements referenced therein including NSF61/9
- Complies with California Proposition 65 and with the Federal Safe Drinking Water Act
- **ADA** for lever handle

WARRANTY
- Lifetime limited warranty against leaks, drips and finish defects to the original consumer purchaser
- 5 year warranty if used in commercial installations

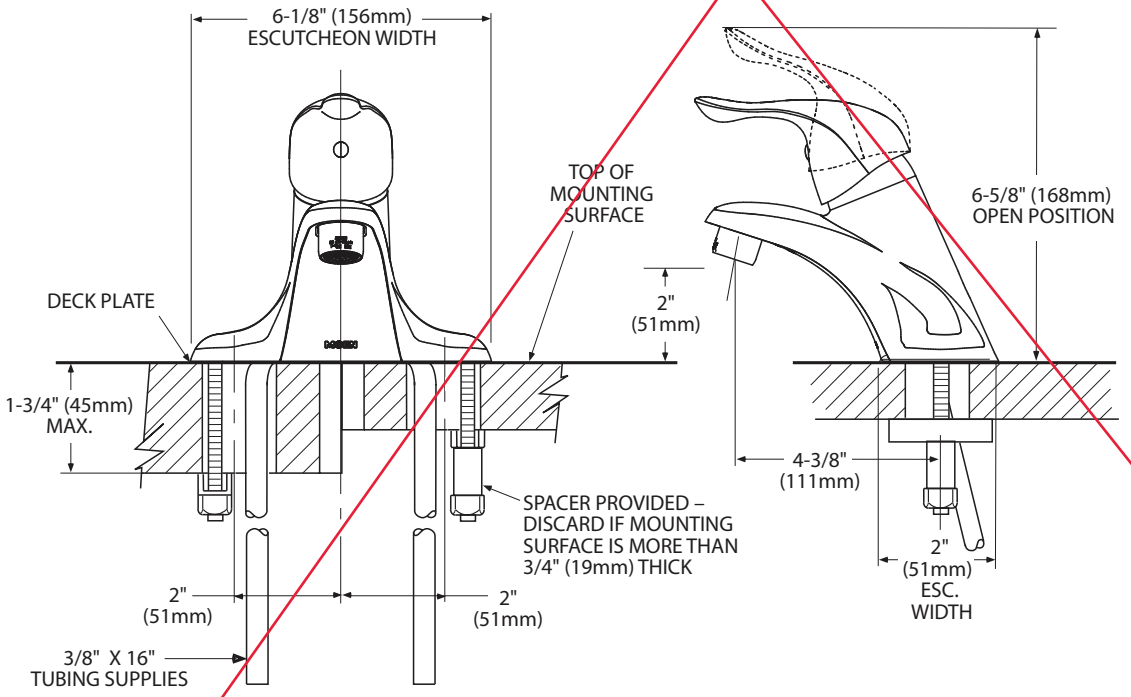

WaterSense Meets EPA Criteria℠ Certified by IAPMO R&T

CRITICAL DIMENSIONS

(DO NOT SCALE)

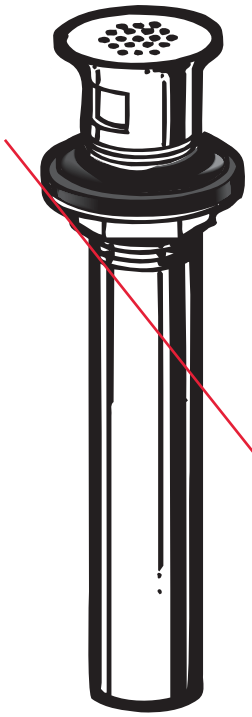

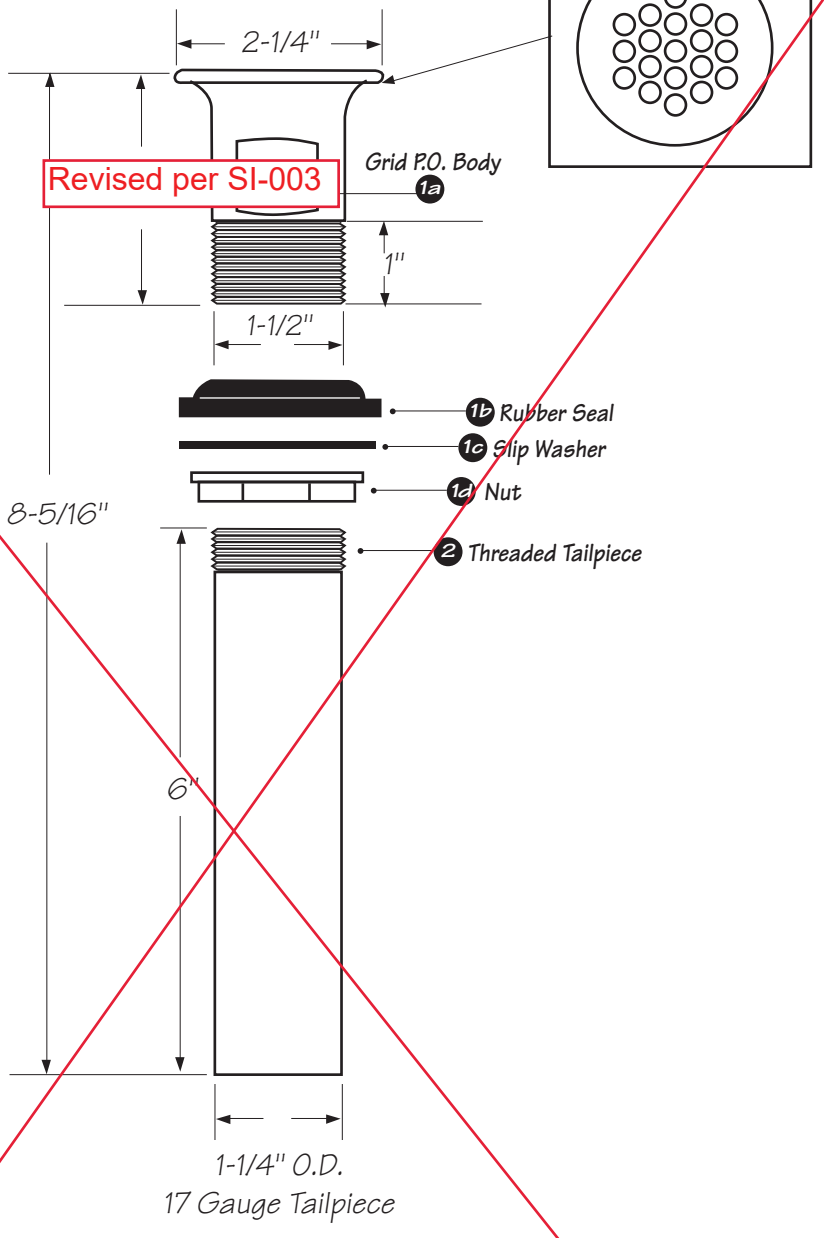

1	370	Grid P.O. Body Assembly
2	4831-6	17 Gauge Tailpiece

OS&B
OAKVILLE STAMPING & BENDING

Date: March 31/00	Approved by:	Drawn by: S.Black
Scale: not to scale		Revision: 01
Product: P.O. Plug		Number: 3700

McGuire Manufacturing Co., Inc.
60 Grandview Court
P.O. Box 746 • Cheshire, CT 06410
203-699-1801 • Fax: 203-699-1813
www.mcguiremfg.com

PRODUCT SPECIFICATION

Part No.
8872, 8902, 8902CNC, 8912, 8912CNC, 8903, 8904

Cast Body P-Trap With or Without Cleanout

Job Name: _____ **Submittal Number:** _____

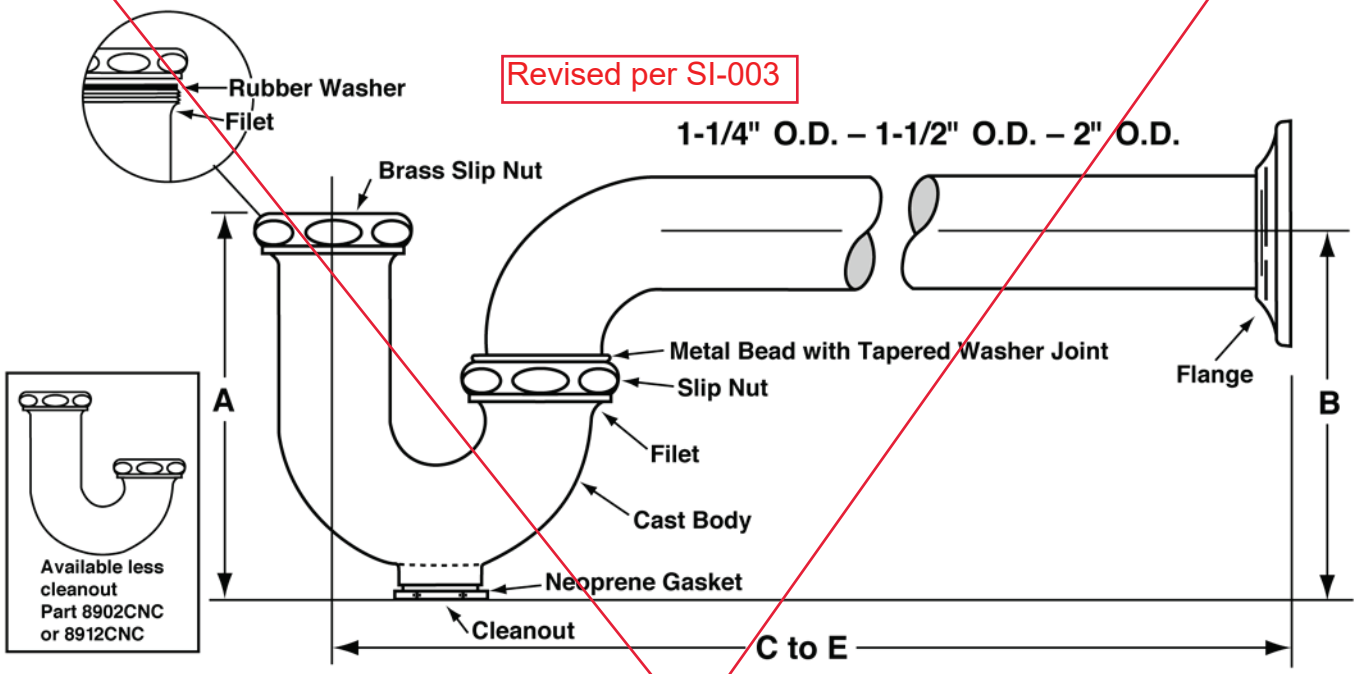

PROFESSIONAL LINE

ROUGHING MEASUREMENTS

NO.	TRAP DIMENSIONS		A	B	C to E
	INLET	OUTLET			
8872	1-1/4"	1-1/4"	4-1/2"	4-1/4"	11-1/2"
8902	1-1/4"	1-1/2"	5"	5-1/2"	11-1/2"
8902CNC	1-1/4"	1-1/2"	4-5/8"	4-3/4"	11-1/2"
8912	1-1/2"	1-1/2"	5"	5-1/2"	11-1/2"
8912CNC	1-1/2"	1-1/2"	4-5/8"	4-1/8"	11-1/2"
8903	1-1/2"	2"	5"	6"	13-3/4"
8904	2"	2"	5"	6"	13-3/4"

FED SPEC W.W.P. 541
CAST BRASS P TRAP
MINIMUM SEAL 2"

See options and accessories section for details on product variations.

ASME A112.18.1-2011/CSA B125-2.11

Specifications:

P-Trap shall be chrome plated cast brass body (with, without) cleanout, with 17 gauge seamless tubular wall bend, cast brass slip nuts. Reducing washers shall be used with reducing cast brass nut. With (shallow, deep, bell) (steel, brass) or (forged brass with set screw) flange. P-Trap shall be McGuire "Classic" Professional Line (8872C, 8902C, 8912C, 8903, 8904). Trap shall be certified by CSA or other recognized testing authority. P-Trap shall bear manufacturer and testing mark.

© 2015 McGuire Manufacturing Co., Inc. All rights reserved / I Traps / www.mcguiremfg.com

WWTP IQUALUIT

SPEC 22 42 03 2.1

TAG : WC-1

American Standard
Style That Works Better

CADET RIGHT HEIGHT™ ELONGATED PRESSURE-ASSISTED 6L TOILET

VITREOUS CHINA

BARRIER FREE

CADET RIGHT HEIGHT™ ELONGATED PRESSURE-ASSISTED 6L TOILET



☑ **2467 016**

- Vitreous china
- Low-consumption (6.0 Lpf/1.3 gpf)
- EverClean® surface inhibits the growth of stain- and odor-causing bacteria, mold, and mildew on the surface
- Elongated 16-1/2" (419mm) high bowl rim for accessible applications
- Pressure-assisted siphon jet flush action
- Fully-glazed 2-1/8" (54mm) trapway) ball pass
- Generous 10 x 12" (254x305mm) water surface area
- Close-coupled Flushometer tank*
- Metal chrome trip lever
- Speed Connect™ tank/bowl coupling system
- Sanitary dam on bowl
- 2 bolt caps
- 100% factory flush tested
- 12" (305mm) Rough-in

Separate Component Parts:

☑ **3483 001** Elongated 16-1/2" (419mm) high Universal Bowl with 2 bolt caps

☑ **4142 016** Flushometer tank complete with coupling components

Nominal Dimensions:
768 x 521 x 781mm
(30-1/4" x 20-1/2" x 30-3/4")

Fixture only, seat and supply by others

Recommended static pressure range
25 psi - 80 psi

Alternate Configurations Available:

☐ **4142 600** Tank with tank cover locking device

☐ **4142 800** Tank with right hand trip lever

☐ **4142 900** Tank complete with right hand trip lever and tank cover locking device

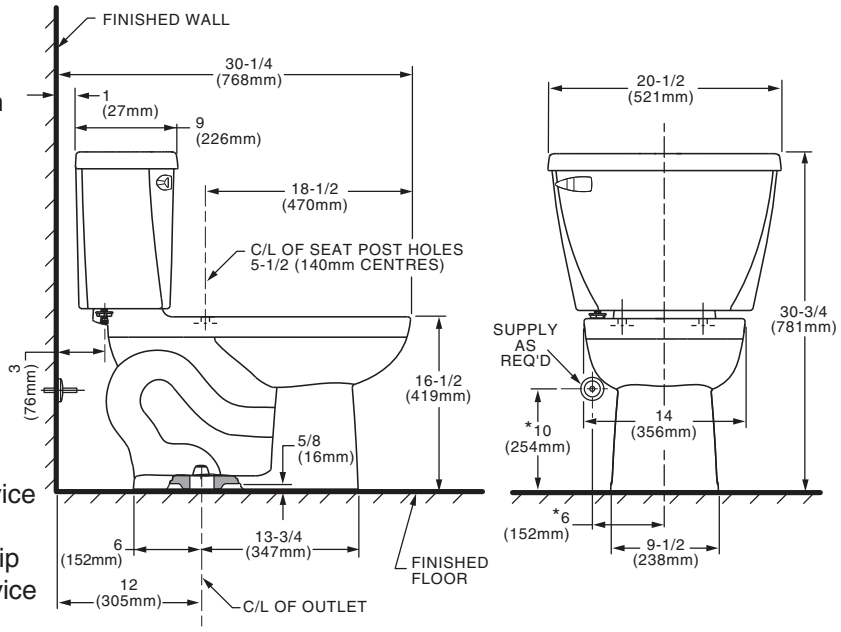

Compliance Certifications -
Meets or Exceeds the Following Specifications:

- ASME A112.19.2-2008 / CSA B45.1-08 for Vitreous China Fixtures

To Be Specified

❑ Colour: ☑ White ❑ Bone ❑ Linen ❑ Black

❑ Seat: American Standard #5324 019 "Rise and Shine" (with easy to clean lift-off hinge system) solid plastic closed, elongated front seat with cover. See price page.

❑ Seat: #5321 110 EverClean® Elongated Seat with Slow Close Snap-Off Hinges

❑ Alternate Seat:

❑ Supply with stop:

NOTES:
THIS TOILET IS DESIGNED TO ROUGH-IN AT A MINIMUM DIMENSION OF 305mm (12") FROM FINISHED WALL TO C/L OF OUTLET.
SUPPLY NOT INCLUDED WITH FIXTURE AND MUST BE ORDERED SEPARATELY.
* DIMENSION SHOWN FOR LOCATION OF SUPPLY IS SUGGESTED.
FOR ADDITIONAL INFORMATION REFER TO INSTALLATION INSTRUCTIONS SUPPLIED.
IMPORTANT: Dimensions of fixtures are nominal and may vary within the range of tolerance established by ANSI Standard A112.19.2
These measurements are subject to change or cancellation. No responsibility is assumed for use of superseded or voided pages.

When installed so top of seat is 432 to 483mm (17" to 19") from the finished floor.
MEETS THE AMERICAN DISABILITIES ACT GUIDELINES AND ANSI A117.1 REQUIREMENTS FOR ACCESSIBLE AND USEABLE BUILDING FACILITIES- CHECK LOCAL CODES.

* Flushometer tank system by Flushmate® Div. of Sloan Valve Co.

TOI-223

07/10

© 2010 American Standard

BEMIS COMMERCIAL

COMMERCIAL HEAVY-DUTY PLASTIC TOILET SEAT



MODEL #	COLOR #
1055/1055SSC	WHITE

DESCRIPTION:

Open front less cover, elongated, heavy-duty, injection molded solid plastic toilet seat. Features two molded-in bumpers, non self-sustaining (1055) or self-sustaining (1055SSC) check hinges with non-corrosive 300 Series stainless steel posts, pintles and hardware. This seat complies with IAPMO/ANSI Z124.5-2013 Plastic Toilet Seats as a class Commercial Heavy Duty.

SPECIFICATIONS:

Size:	Elongated
Material:	Plastic
Style:	Open Front less Cover
Bumpers:	Two
Hinges:	Plastic Non Self-Sustaining (1055) or Self-Sustaining (1055SSC) with 300 Series Stainless Steel Posts and Pintles
Fastening System:	Non-Corrosive 300 Series Stainless Steel Nuts

FEATURES:

Non-Corrosive 300 Series Stainless Steel Posts, Pintles and Nuts

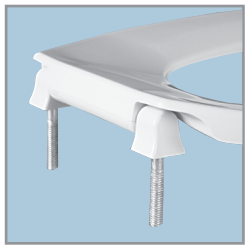

PLASTIC HINGES WITH STAINLESS STEEL POSTS AND PINTLES

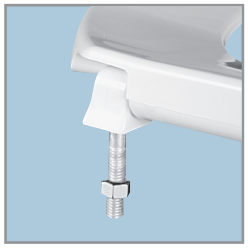

NON-CORROSIVE STAINLESS STEEL NUTS

DIMENSIONS:

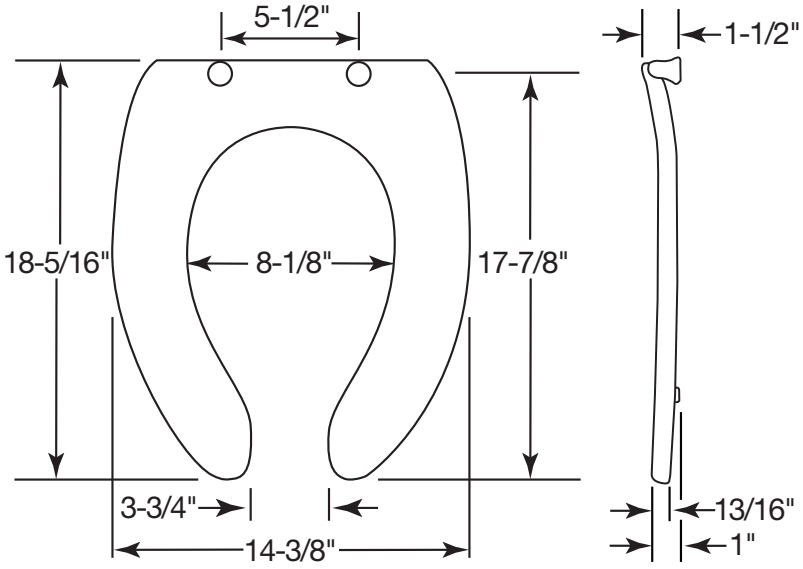

Proudly Made in the USA

Bemis Manufacturing Co., Sheboygan Falls, WI 53085
www.ToiletSeats.com

Phone: 800-558-7651 Fax: 800-292-3647

©2014 0B7012284 REVB

WWTP IQUALUIT

TAG: DCE-1

STRIKE FIRST CORPORATION

777 TAPSCOTT RD.
SCARBOROUGH, ONTARIO, CANADA M1X 1A2
PH: 416-299-7767 FAX: 416-299-8039
TOLL FREE: 1-888-575-1132
TOLL FREE FAX: 1-888-575-1134
www.strike-first.com info@strike-first.com

5 LB MULTI-PURPOSE DRY CHEMCIAL FIRE EXTINGUISHER

MODEL: WBDL-ABC340LV



- STEEL CYLINDER COMPLETE WITH CYLINDER SKIRT
- SUPER DURABLE POLYESTER POWDER PAINT FINISH
- WATERPROOF STAINLESS STEEL GAUGE
- STRONG POLYESTER POWDER COATED STEEL HANDLES
- BAR CODED LABEL
- COMPLETE WITH WALL HOOK *OR* COAST GUARD VEHICLE / MARINE BRACKET

SPEC ON DRAWING M801

FIRE EXTINGUISHER SCHEDULE

SPECIFICATIONS	
CAPACITY	5 LBS.
ULC RATING	3-A : 40-B, C
RANGE (FT.)	8 - 10
DISCHARGE TIME	13 - 14 SECS.
PSI	195
HEIGHT	16" (41 cm)
WIDTH	6 3/4" (17 cm)
DIAMETER	4 1/4" (11 cm)
WEIGHT	10 1/2 LBS. (4.8 kg.)

MANUFACTURED AND TESTED TO THE FOLLOWING STANDARDS:

CAN/ULC-S508-M90
ANSI/UL 711
CAN/ULC-S504-M86
ANSI/UL 299
U.S.C.G.

ULC LISTED

CLASS: A B C



6 YEAR WARRANTY

MADE IN CANADA

WWTP IQUALUIT

TAG: DCE-2

STRIKE FIRST CORPORATION

777 TAPSCOTT RD.
SCARBOROUGH, ONTARIO, CANADA M1X 1A2
PH: 416-299-7767 FAX: 416-299-8039
TOLL FREE: 1-888-575-1132
TOLL FREE FAX: 1-888-575-1134
www.strike-first.com info@strike-first.com

10 LB MULTI-PURPOSE DRY CHEMCIAL FIRE EXTINGUISHER

MODEL: WBDL-ABC10



SPEC ON DRAWING M801
FIRE EXTINGUISHER SCHEDULE

- STEEL CYLINDER COMPLETE WITH CYLINDER SKIRT
- SUPER DURABLE POLYESTER POWDER PAINT FINISH
- WATERPROOF STAINLESS STEEL GAUGE
- STRONG POLYESTER POWDER COATED STEEL HANDLES
- BAR CODED LABEL
- COMPLETE WITH WALL HOOK
  OPTIONAL COAST GUARD VEHICLE / MARINE BRACKET SOLD SEPERATELY

MANUFACTURED AND TESTED TO THE FOLLOWING STANDARDS:

CAN/ULC-S508-M90
ANSI/UL 711
CAN/ULC-S504-M86
ANSI/UL 299
U.S.C.G.

ULC LISTED

SPECIFICATIONS	
CAPACITY	10 LBS.
ULC RATING	6-A : 80-B, C
RANGE (FT.)	10 - 15
DISCHARGE TIME	14 - 16 SECS.
PSI	235
HEIGHT	21 1/4" (54 cm)
WIDTH	9 1/2" (24 cm)
DIAMETER	5 1/8" (13 cm)
WEIGHT	19 1/4 LBS. (8.8 kg.)

CLASS: A B C



6 YEAR WARRANTY

MADE IN CANADA

Mécanique Nordique
Plumbing
Heating
Ventillation
mecanique.nordique@hotmail.com

1255 Rue J.A.Bombardier
Lévis, Québec
G7A 2P4
Téléphone: 418-496-1109
Télécopieur: 418-496-3803

REVIEWED BY CONTRACTOR
Kudlik Construction Ltd.
NAME: Sandra Rousseau P.Eng
DATE: Sep 06, 2018

IQALUIT WWTP UPGRADE

DRAWING FOR APPROVAL

Ingineer : NUNAMI STANTEC

DRAWING #: AD-018R

Section 23 72 00
Article PART 2
Plans M-801
Application : AIR HANDLING UNIT
Brand : ENGINEE RED AIR
Model : LM8/C/CH RA/MVV
Revised # : 1
Supplyer : ENGINEE RED AIR

Pages incl. 32
Date : **2018-08-06**
By : **Mécanique Nordique Inc.**

STANTEC PROJECT #: 110126045
SUBMITTAL #

This review by Stantec is for general conformance with the design concept of Stantec's design of the:
☐ Architectural ☐ Electrical
☐ Structural ☐ Other
☐ Mechanical

component(s) only and does not mean that Stantec has verified or approves the shop drawing(s). The Contractor remains solely responsible for the shop drawing(s) and this review by Stantec does not relieve the Contractor of the Contractor's responsibility for errors or omissions in the shop drawing(s) or for meeting all requirements of the contract documents. This review does not mean that Stantec approves the detailed design inherent in the shop drawing, responsibility for which shall remain with the Contractor submitting same, nor does this review mean that Stantec accepts any deviation of the shop drawing(s) from the contract documents. The Contractor is responsible for confirming all dimensions and correlating them at the job site, for all construction means, methods and techniques, and for coordination of construction work of all trades, including coordination of all shop drawings.

Stantec

☐ REVIEWED
☑ REVIEWED, AS NOTED
☐ REVISE AND RESUBMIT
☐ NOT REVIEWED

DATE 2018-09-27
BY BORIS HOEFS

DRAWING TRANSMITTAL SHEET

EngA® ENGINEERED AIR®

JOB NO. **M19012(J203)**

DATE **August 24, 2018**

☑ MONTREAL SALES OFFICE
1450 CUNARD STREET
LAVAL QC
H7S 2B7
(450) 662-1210

CANADIAN HEAD OFFICE
CALGARY AB

CANADIAN FACTORY
CALGARY AB
EDMONTON AB
NEWMARKET ON

OTHER CANADIAN SALES OFFICES
VANCOUVER, EDMONTON, CALGARY, SASKATOON, REGINA, WINNIPEG, LONDON, SUDBURY, TORONTO, HAMILTON, OTTAWA, HALIFAX, MONCTON

CONTRACTOR **MECANIQUE NORDIQUE INC**

ADDRESS **1255 RUE J.A. BOMBARDIER**
LEVIS, QC
G7A 2P4

ENGINEER **STANTEC CONSULTING LTD. (WHITEHORSE)**

JOB NAME **IQALUIT WWTP**

☑ THIS ORDER IS SUBJECT TO APPROVAL. MANUFACTURING IS HELD PENDING RETURN OF ONE APPROVED COPY OF THESE FORMS TO THE INDICATED OFFICE.

☐ THIS ORDER IS NOT SUBJECT TO APPROVAL AND IS BEING MANUFACTURED ACCORDING TO THE ATTACHED FORMS.

COPIES ENCLOSED	DESCRIPTION
1	EngA Submittal Revision Summary
1	EngA Submittal Record
1	EngA Mechanical Drawing M19012M-01-1
1	TwinCity Supply Air Fan Performance Curve and Sound Data
1	TwinCity Exhaust Air Fan Performance Curve and Sound Data
1	EngA TRP Air to Air Heat Exchanger Performance Data Sheet
1	EngA Electrical Data Sheet
1	EngA Field Wiring Diagram M19012F-01-1
1	EngA Unit Sound Data
1	Dafco 2" MERV 8 Filter Cutsheet
1	Dafco 4" MERV 14 Filter Cutsheet
1	Tamco 1000 Cutsheet
1	Johnson A350 Freeze Controller
1	EngA Installation, Operation and Maintenance Manual (LM Series)

PER **MATHIEU HAMEL / HMC**

SUBMITTAL REVISIONS

JOB NAME: IQALUIT WWTP **JOB NO:** M19012(J203)

CUSTOMER: MECANIQUE NORDIQUE INC

ENGINEER: STANTEC CONSULTING LTD. (WHITEHORSE) **REVISION DATE:** Aug 24, 2018

CHANGES AND/OR REVISIONS MADE TO THIS ORDER:

R□□□□□□□ (AUG 24, 2018)

- □□□ □□□ O/A & E/A □□□ □□□□ □□□ □□□ 0.1" □ □ □□ ESP.
- □□□□□□ □□□□□□□□□□ □□□□ LHS □□ RHS
- □□□□□□ E/A □□□ □□□□□□□□ □□□□□□□□□.
- □□□□□□ □□□□□□ □□□□ 245' □□ 37' □□ HRA □□□□ □□□ □□□ □□□□□
- □□□□□□ □□□□TSP, □□□□□ □□□□□□□□□, □□□ □□□□ □□□□.
- □□□□□□2" □□□□ □□□□ □□□, AL □□□□ □□□□□□□□□□

EngA ENGINEERED AIR

SUBMITTAL RECORD

JOB NAME: IQALUIT WWTP **JOB NO:** M19012(J203)

CUSTOMER: MECANIQUE NORDIQUE INC **ENGINEER:** STANTEC CONSULTING LTD. (WHITEHORSE)

EngA MODEL: LM8/C/HRA/MV **QTY:** 1 **TAG:** AHU-2

SHIPPING AND APPROVAL INFORMATION

MOUNTING I□□□□□B□□□ M□□□□□□ **ACCESS** A□P□□D□□□ □□□

SHIPPING WEIGHT 7240 □□ (3291 □□) **OPERATING WEIGHT** 7140 □□ (3245 □□)

NO. OF PIECES 1 U□□□

□ I□□□□□□ □ETL □□□□□□□□.

□ U□□□ □□□□ □□□□ □ □□□□□ □□□□□□□□□□□□□□.

SUPPLY AIR DATA

AIR FLOW 8,370 CFM (3,950 /□) **FAN SIZE** (1) 182 BAE-DIDW **TSP** 3.6 □□ □.□ (896 P□) **RPM** 2003

MOTOR SIZE 7 1/2 HP (5.6 □W) **TYPE (RPM)** S□□ B□□□ □1□ **ESP** 0.86 □□ □.□ (214 P□) **BHP** 6.69 BHP (4.99 □W)

□ □1□- S□□□□'E' TEFC (1750) □/ A□□□ R□□□

□ S□□□□ □□□□/□ □□□/□ □□□ □□ □□□ □□□□□ □□□□□, □□□ □□□ □□□□□, □□□□□□ □□□ □□□ □□□□□ □□□□ □□□□, OSHA □□□□□ □□□ □□□□□□□ □□□ □□□□□□□□□□□ □□□.

□ U□□□ □□□□□ ABB □□□□□□□□ □□□□ □□□ □/□ □□□□□□DC □□□□, □□□□□□□□□□ □□□□□□ □□□ □ □□□□□□□□□ □□ □□□.
A□□□□□□□□ □□□□ □□□ □□ □□□□□□□ □□□4,185 CFM(1,975 /□) □ □□□ □□ □□□□□ □□30 H□ □□□□□□□ □□□□□□□.

EXHAUST AIR DATA

AIR FLOW 7,930 CFM (3,743 /□) **FAN SIZE** (1) 182 BAE-DIDW **TSP** 2.3 □□ □.□ (573 P□) **RPM** 1736

MOTOR SIZE 7 1/2 HP (5.6 □W) **TYPE (RPM)** S□□ B□□□ □1□ **ESP** 0.6 □□ □.□ (149 P□) **BHP** 4.33 BHP (3.23 □W)

□ □1□- S□□□□'E' TEFC (1750) □/ A□□□ R□□□

□ E□□□□□□□□□□□/□ □□□/□ □□□ □□ □□□ □□□□□ □□□□□, □□□ □□□ □□□□□, □□□□□□ □□□ □□□ □□□□□ □□□□ □□□□, OSHA □□□□□ □□□ □□□□□□□ □□□ □□□□□□□□□□□ □□□.

□ U□□□ □□□□□ ABB □□□□□□□□ □□□□ □□□ □/□ □□□□□□DC □□□□, □□□□□□□□□□ □□□□□□ □□□ □ □□□□□□□□□ □□ □□□.
A□□□□□□□□ □□□□ □□□ □□ □□□□□□□ □□□3,965 CFM(1,871 /□) □ □□□ □□ □□□□□ □□30 H□ □□□□□□□ □□□□□□□.

AIR OPENING DATA

AIR OPENING	LOCATION	DAMPER TYPE	OPERATION
SUPPLY AIR	T□□		
RETURN AIR	S□□ B□□□ □1□		
OUTSIDE AIR	S□□ B□□□ □1□		
EXHAUST AIR	S□□ B□□□ □1□		
HRA FACE & BYPASS AIR	□□ A□□□ A□HTX	S□□ B□□□ □2□	M□□□□□□□

□ □1□- S□□ M□□□□□□□□D□□□ □□□

□ □2□- TAMCO S□□□□ 1000FB L□□ L□□□□□□ A□□□ □□□□ A□-□□□F□□□-B□□□□□ O□□□□□ B□□□

SURFACES CLEANED WITH DEGREASING SOLVENT.

CONSTRUCTION DATA

UNIT CABINET 16 □□□□□ □□□□ □□□□□□□□□□□ □□□□□ □□□□/□ 2" (51 □ □) 3 □/□□□(48 □□/□ □) □□□□□□□□ □□ □□□□ □□□□□□□□.

UNIT LINER 22 □□□□□ □□□□ □□□□□□□□□□□□□□

EngA ENGINEERED AIR

SUBMITTAL RECORD

JOB NAME: IQALUIT WWTP **JOB NO:** M19012(J203)

EngA MODEL: LM8/C/HRA/MV **QTY:** 1 **TAG:** AHU-2

CONSTRUCTION DATA (CONTINUED)

DRAIN PAN 14 [illegible] 2" [illegible] HRA [illegible]

□ P[illegible] HX : (1) 40"(1016 □ □) □40"(1016 □ □) □48"(1219 □ □) □[illegible] A[illegible] (S[illegible]).

ELECTRICAL DATA

CIRCUIT NO	POWER SUPPLY	MINIMUM CIRCUIT AMPACITY	MAXIMUM FUSE(D.E.)	MAXIMUM BREAKER
1	575 / 3 / 60	20.5 AMPS	25 AMPS	25 AMPS
2	120 / 1 / 60	12.0 AMPS	15 AMPS	15 AMPS

□ S[illegible]

□ U[illegible]

□ MCA [illegible]

□ (2) □ [illegible] - 120V/1PH/ 60H□ [illegible]

SUMMER FILTER SECTION DATA - Side Loaded

FILTER TYPE D[illegible] MERV 13 [illegible]

QTY/SIZE 2 - 25 □16 □2" (635 □406 □51 □ □) **QTY/SIZE** 2 - 25 □20 □2" (635 □508 □51 □ □)

QTY/SIZE 1 - 20 □16 □2" (508 □406 □51 □ □) **QTY/SIZE** 1 - 20 □20 □2" (508 □508 □51 □ □)

TOTAL GROSS AREA 17.50 SQ.FT. (1.63 SQ. MTRS) **FACE VELOCITY** 478 FPM (2.43 □/□)

□ F[illegible]

□ 1 [illegible]

□ D[illegible] 0-1" [illegible]

□ G[illegible]

WINTER FILTER SECTION DATA - Side Loaded

FILTER TYPE P[illegible] MERV 8 [illegible]

QTY/SIZE 2 - 25 □16 □2" (635 □406 □51 □ □) **QTY/SIZE** 2 - 25 □20 □2" (635 □508 □51 □ □)

QTY/SIZE 1 - 20 □16 □2" (508 □406 □51 □ □) **QTY/SIZE** 1 - 20 □20 □2" (508 □508 □51 □ □)

TOTAL GROSS AREA 17.50 SQ.FT. (1.63 SQ. MTRS) **FACE VELOCITY** 478 FPM (2.43 □/□)

□ F[illegible]

□ D[illegible] 0-1" [illegible]

PROVIDE GALVANIZED MOUNTING RACK

EXHAUST FILTER SECTION DATA - Side Loaded

FILTER TYPE P[illegible] MERV 8 [illegible]

QTY/SIZE 2 - 25 □16 □2" (635 □406 □51 □ □) **QTY/SIZE** 2 - 25 □20 □2" (635 □508 □51 □ □)

QTY/SIZE 1 - 20 □16 □2" (508 □406 □51 □ □) **QTY/SIZE** 1 - 20 □20 □2" (508 □508 □51 □ □)

TOTAL GROSS AREA 17.50 SQ.FT. (1.63 SQ. MTRS) **FACE VELOCITY** 453 FPM (2.30 □/□) @ 7930 CFM (3743 □/□)

□ F[illegible]

□ 1 [illegible]

□ D[illegible] 0-1" [illegible]

PROVIDE GALVANIZED MOUNTING RACK

HYDRONIC PRE-HEAT COIL DATA

COIL SIZE 30 (762) □60 (1524) □1R □14 FPI **VELOCITY** 599 FPM (3.05 □/□)

CAPACITY 504,520 B[illegible] (147.8 □W) **AIR P.D.** 0.17 [illegible] (42 P□)

ENTERING AIR DB -41.8□F (-41.0□C) **LEAVING AIR DB** 14.0□F (-10.0□C)

FLUID MEDIUM 50% P[illegible]-G[illegible] **CONN. SIZE (In & Out)** 2 [illegible] (51 □ □) **FLUID P.D.** 3.4 FT (10 □P□)

FLUID FLOW RATE 37.5 US.GPM (2.4 □/□) **ENTERING FLUID TEMP** 180□F (82.2□C) **LVG. FLUID TEMP** 150.1□F (65.6□C)

EngA ENGINEERED AIR

SUBMITTAL RECORD

JOB NAME: IQALUIT WWTP **JOB NO:** M19012(J203)

EngA MODEL: LM8/C/HRA/MV **QTY:** 1 **TAG:** AHU-2

HYDRONIC PRE-HEAT COIL DATA (CONTINUED)

- □ H□□□□□□ □□□□□/□ □□□□□□□□□ □□□□□□□□□□.
- □ F□□□□□ □□□□□□□□□□ □□ □□□□□□.
- □ H□□□□□□□ □□□□□□ □□□□□ □□□□□ □□□□□□□□ □□□□ □□□ □□ 150 □□□□. T□□ □□□□□□□□□ P.D. □□□□□ □ □□□□□□ □□□□□□□□ □□□ □□□□□□□□□ □□□□ □□□□□□□□□ □ □□□□□□ □□□ □□□□□□□□ □□ □□□ □□□□□□□□□ □□□□□□ .

HYDRONIC HEATING COIL DATA

COIL SIZE	36 (914) □60 (1524) □1R □6 FPI	**VELOCITY**	545 FPM (2.77 □/□)
CAPACITY	189,200 B□□□ (55.4 □W)	**AIR P.D.**	0.08 □□.□□ (20 P□)
ENTERING AIR DB	36.6□F (2.6□C)	**LEAVING AIR DB**	57.5□F (14.2□C)
FLUID MEDIUM	50% P□□□□□□□□-G□□□□□	**CONN. SIZE (In & Out)**	1 1/4 □□ (32 □ □)
FLUID P.D.	2.8 FT (8 □P□)		
FLUID FLOW RATE	14.1 US.GPM (0.9 □/□)	**ENTERING FLUID TEMP**	180□F (82.2□C)
LVG. FLUID TEMP	150.2□F (65.7□C)		

- □ H□□□□□□ □□□□□/□ □□□□□□□□□ □□□□□□□□□□.
- □ L□□ □□□ □□□□□□□ □□□□□□□; □□□□@ 40□F (4.4□C).
- □ H□□□□□□□ □□□□□□ □□□□□ □□□□□ □□□□□□□□ □□□□ □□□ □□ 150 □□□□. T□□ □□□□□□□□□ P.D. □□□□□ □ □□□□□□ □□□□□□□□ □□□ □□□□□□□□□ □□□□ □□□□□□□□□ □ □□□□□□ □□□ □□□□□□□□ □□ □□□ □□□□□□□□□ □□□□□□ .

SHIPPED LOOSE ITEMS (See filter sections for filters and spare filters)

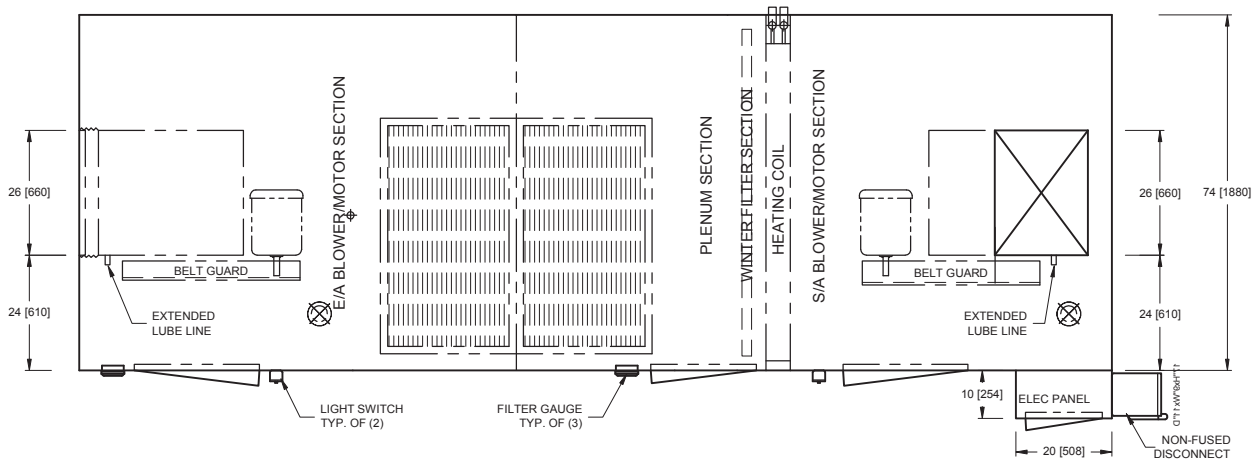

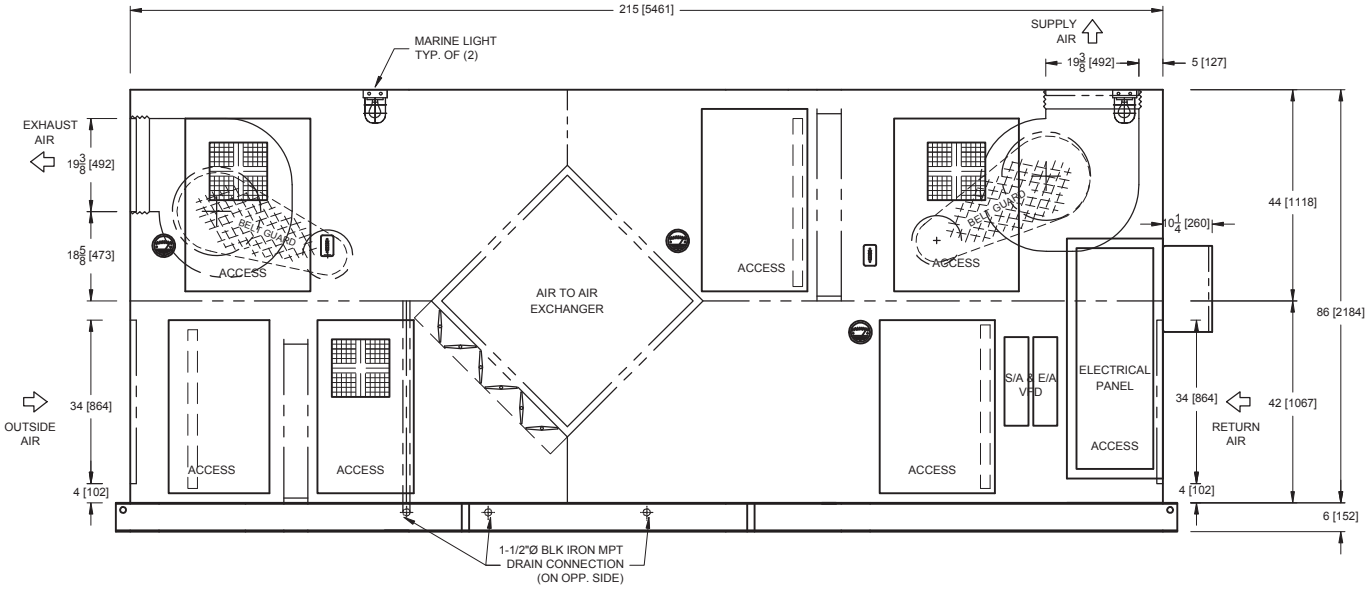

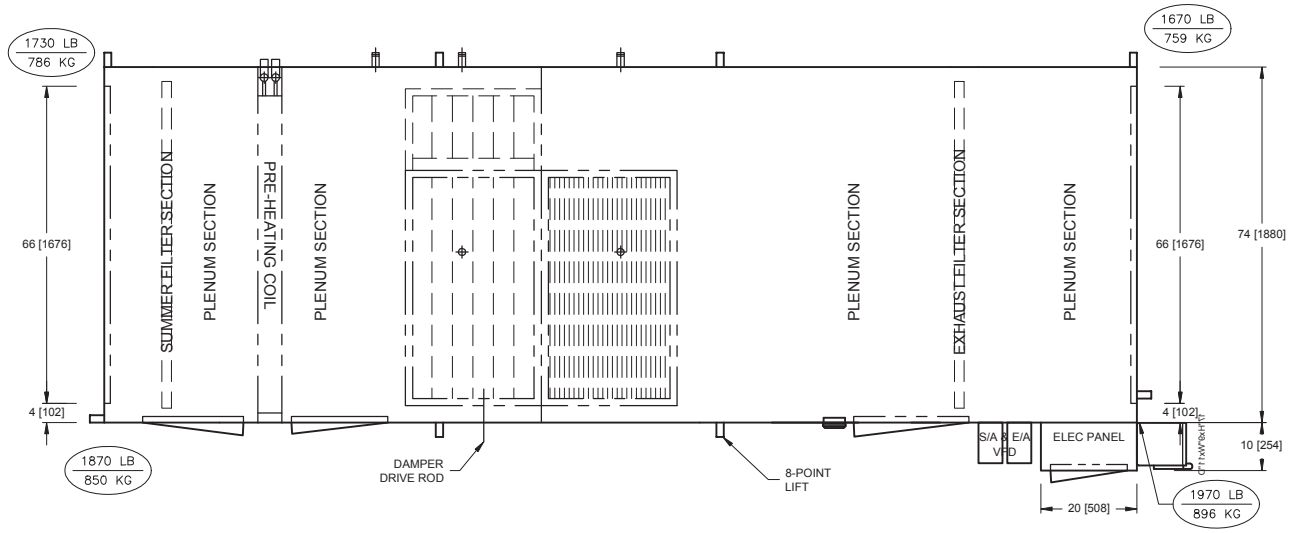

ProUnit

DOOR SIZES AND INTERNAL COMPONENTS ARE APPROX. VALUES. DIMENSIONS SHOWN IN INCHES & [MM] UNLESS OTHERWISE NOTED.

M19012 (J203)

TAG: AHU-2

LM8/C/HRA/MV

AIR HANDLING UNIT

EngA®

ENGINEERED AIR®

REVISIONS: AUG 22, 2018			
DATE: JUN 14 2018	DRWN BY: HMC	CHKD BY: KWL	DRWG NO.: M19012M-01-1

Job Name:

Fans & Blowers
Twin City

Customer:
Job ID: M19012
Date: August 22, 2018

Tag: AHU-2 SA

Fan information

Size/Model 182/BAE-DW
Volumetric Flow (m³/sec) 3.95
SP (Pa) 897

Class I
Speed (RPM) 2003
Max Speed . . 2248 RPM @ 21 °C
Power (KW) 4.99

Outlet Vel (m/sec) 12.32
Density (kg/m³) 1.1998
FEG FEG90

Adjusted for Altitude: 11 m

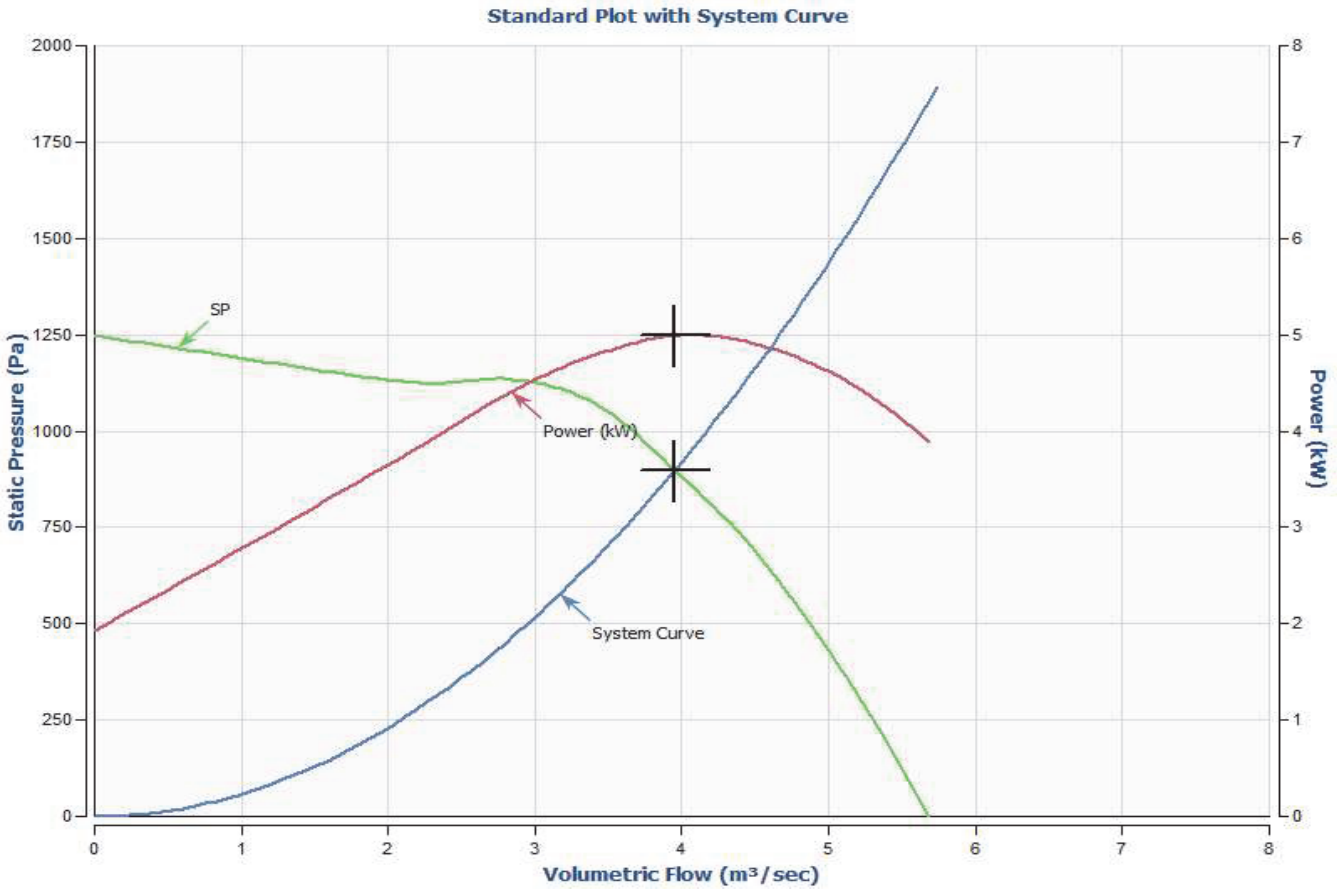

Sound Power Ea.	Octave Bands	1	2	3	4	5	6	7	8	LwA	dBA
	Inlet dB	91	91	94	93	86	81	78	74	93	79
	Outlet dB	98	96	94	91	86	82	79	75	93	78

LwA: The overall (single value) fan sound power level in dB re. 10^{-12} Watts, 'A' weighted.
dBA: Estimated sound pressure level (re:0.0002 microbar) based on a single ducted installation at 5 ft., using a directivity factor of 1.

Job Name:

Fans & Blowers
Twin City

Customer:
Job ID: M19012
Date: August 23, 2018

Tag: AHU-2 EA

Fan information

Size/Model 182/BAE-DW
Volumetric Flow (m³/sec) . . . 3.742
SP (Pa) 573

Class I
Speed (RPM) 1736
Max Speed . . 2248 RPM @ 21 °C
Power (KW) 3.23

Outlet Vel (m/sec) 11.68
Density (kg/m³) 1.1998
FEG FEG90

Adjusted for Altitude: 11 m

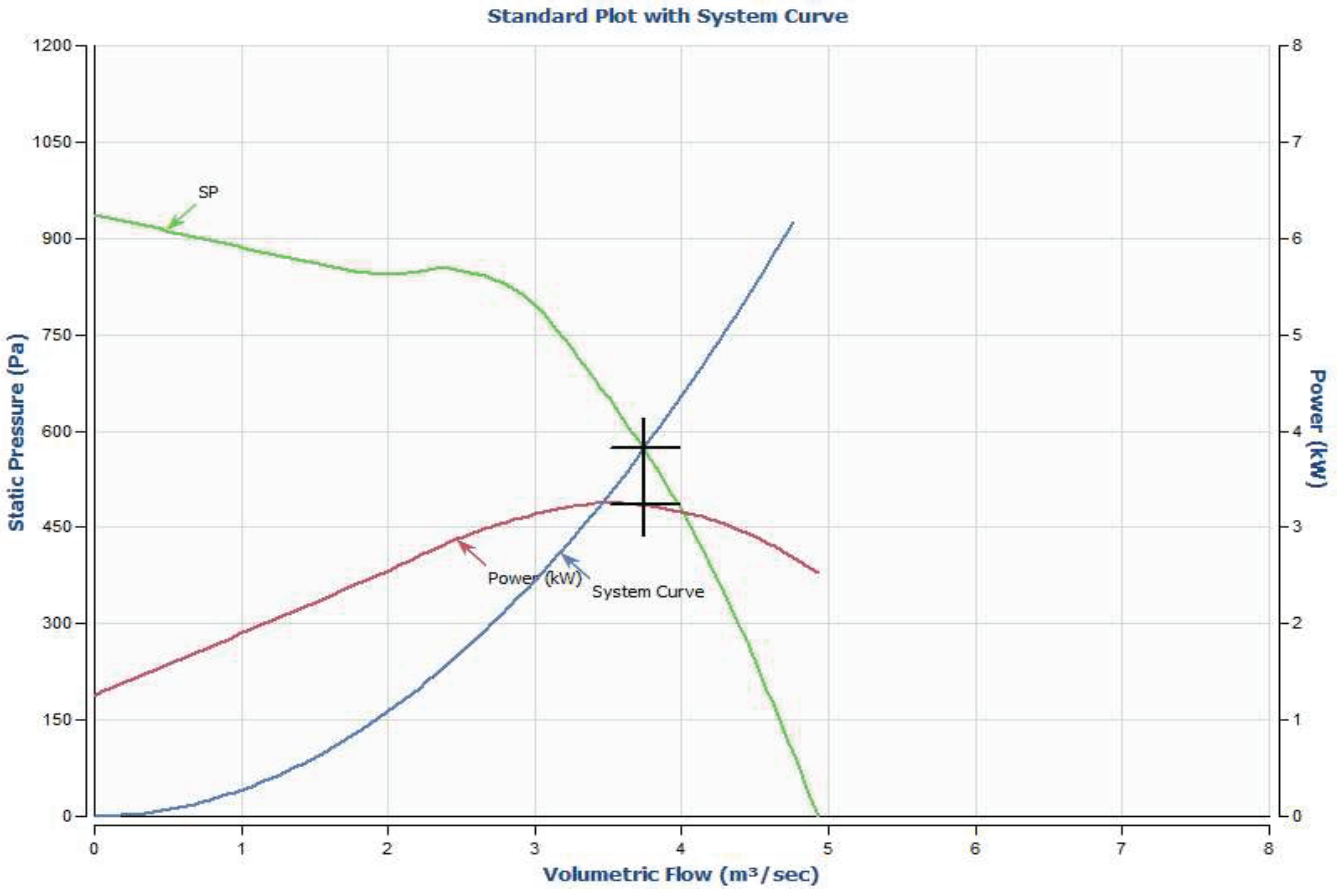

Sound Power Ea.	Octave Bands	1	2	3	4	5	6	7	8	LwA	dBA
	Inlet dB	88	89	90	89	81	78	74	70	89	74
	Outlet dB	94	93	92	85	83	80	76	70	89	75

LwA: The overall (single value) fan sound power level in dB re. 10^{-12} Watts, 'A' weighted.
dBA: Estimated sound pressure level (re:0.0002 microbar) based on a single ducted installation at 5 ft., using a directivity factor of 1.

TRP

EngA TRP V5.3

AIR TO AIR HEAT EXCHANGERS

EngA ENGINEERED AIR

1401 Hastings Cresent SE Calgary, AB, Canada, T2G 4C8

Phone: (403)287-2590 Fax:(403)243-5059

Job #:	M19012 (J203)	Tag:	AHU-2	Job Name:	IQALUIT WWTP
Model:	LM8/C/HRA/MV			Contractor:	
Job Site:	Montreal, QC	Elevation:	37 ft.	Engineer:	
Date:	08-23-18			Sales Rep:	

SUPPLY AIR	HEATING	COOLING
Temperature Efficiency	57 %	60 %
Air Flow	8370 SCFM	8370 SCFM
Entering Air DB Temperature	14 °F	80 °F
Entering RH or WB temperature	15 %	67 °F
Leaving Air Temperature	36.7 °F	77 °F (DB) 65.9 °F (WB)
Pressure Drop	1.01 "w.c.	1.11 "w.c.
Energy Recovery	202.44 Mbh	26.2 Mbh
EXHAUST AIR	**HEATING**	**COOLING**
Air Flow	7930 SCFM	7930 SCFM
Entering Air DB Temperature	54 °F	75 °F
Entering RH or WB temperature	25 %	50 %
Leaving Air Temperature	30.1 °F	78.1 °F
Pressure Drop	0.91 "w.c.	1.02 "w.c.

MODEL: AS4048

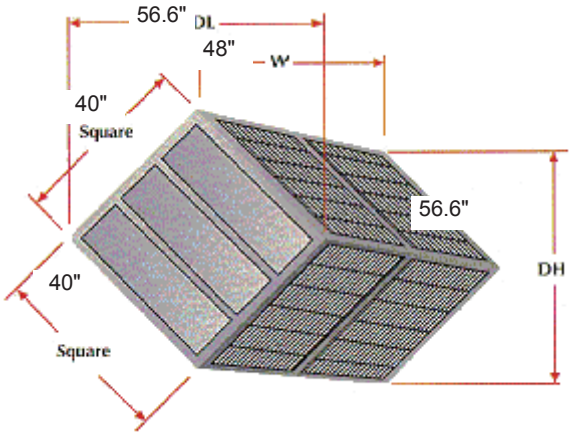

Approx. Weight (lbs): 470

FROST CONTROL DATA

Frost Threshold Temperature N/A

Provide description of testing standards used to determine total energy recovery, cross-contamination %, mold and bacteria resistance, and flame spread.

Provide description of cleaning process for the core for maintenance purposes.

All Rights Reserved

EngA® ENGINEERED AIR®

ELECTRICAL DATA

JOB NAME: IQALUIT WWTP **JOB NO:** M19012(J203)

EngA MODEL: LM8/C/HRA/MV **QTY:** 1 **TAG:** AHU-2

Circuit No	Power Supply	Minimum Circuit Ampacity	Terminal Block to Accept	Maximum Fuse (Dual Element)	Maximum Breaker
1	575 / 3 / 60	20.5 AMPS	10 A□□	25 AMPS	25 AMPS
2	120 / 1 / 60	12.0 AMPS	14 A□□	15 AMPS	15 AMPS

Components	Circuit No	Model	Minimum Conductor Size	Ampacity FLA / LRA
S□□□□□ F□□ M□□□□	1	S□□□□'E' TEFC (1750) □/ A□□□□ R□□□ 7 1/2 HP	14 A□□	7.6
R□□□□□ F□□ M□□□□	1	S□□□□'E' TEFC (1750) □/ A□□□□ R□□□ 7 1/2 HP	14 A□□	7.6
M□□□□□ L□□□□C□□□□□□	2		14 A□□	12.0
M□□□ C□□□□□□X□□ □	1		14 A□□	.3

UNIT CONTROL PANEL(S) SHORT CIRCUIT CURRENT RATING (SCCR)
S□□□□□□□□□□□□□□□□□ 5 □A □□ □ □□□ □ □□□□□□, 575 V □ □□□□ □□

WIRING DRAWING LEGEND					
APS	A□□P□□□□□□ S□ □□□□	DM	D□□ □□□M□□□□	NFD	N□□ F□□□□ D□□□□□□□□□
ASF	A□□□ F□□ S□ □□□□	FR	F□□ R□□□□	OL	T□□□□ □□O□□□□□□□
AUX	A□□□□□□□ C□□□□□□	GND	G□□□□□	PS	P□□□□□□□ S□□□□□
BM	B□□□□□M□□□□	GV	G□□ V□□□□	PV	P□□□□G□□ V□□□□
C	C□□□□□□□□	HL	H□□□ L□□ □□	R	R□□□□
CCH	C□□ □□□□□□□C□□□□□□□□ H□□□□□	HPC	H□□□ P□□□□□□□ C□□□□□□	R□□HL	R□□□□□□ A□□□□□ H□□□ L□□ □□
CFC	C□□□□□□□□□F□□ C□□□□□□	HR	H□□□□□ R□□□□	TB	T□□□ □□□□B□□□□
CLC	C□□ □□□□□□□L□□□□□□ C□□□□□□	IGN	I□□□□□□ C□□□□□□	TDF	T□□ □ D□□□□F□□□
CPM	C□□ □□□□□□□P□□□□□□□□ M□□□□□	ITP	I□□□□□□□T□□□□ □ P□□□□□□□□	TDR	T□□ □ D□□□□R□□□□
CR	C□□□□□ R□□□□	LPC	L□□ P□□□□□□□ C□□□□□□	TS	T□□ □□□□□□□□ S□□□□□
CS	C□□□□□□S□□□□□	M	M□□□□	VFD	V□□□□□□ F□□□□□□□□□ D□□□□
DHSS	D□□□□H□□□ S□□□□S□ □□□□	MV	M□□□ G□□ V□□□□	XFMR	T□□□□□□□□ □□

(Continued on second page) **DATE:** 24-AUG-2018 **SUBMITTED BY:** MATHIEU HAMEL / HMC

ELECTRICAL DATA

JOB NAME: IQALUIT WWTP **JOB NO:** M19012(J203)

EngA MODEL: LM8/C/HRA/MV **QTY:** 1 **TAG:** AHU-2

UNIT FUNCTION

U[illegible] [illegible] [illegible] [

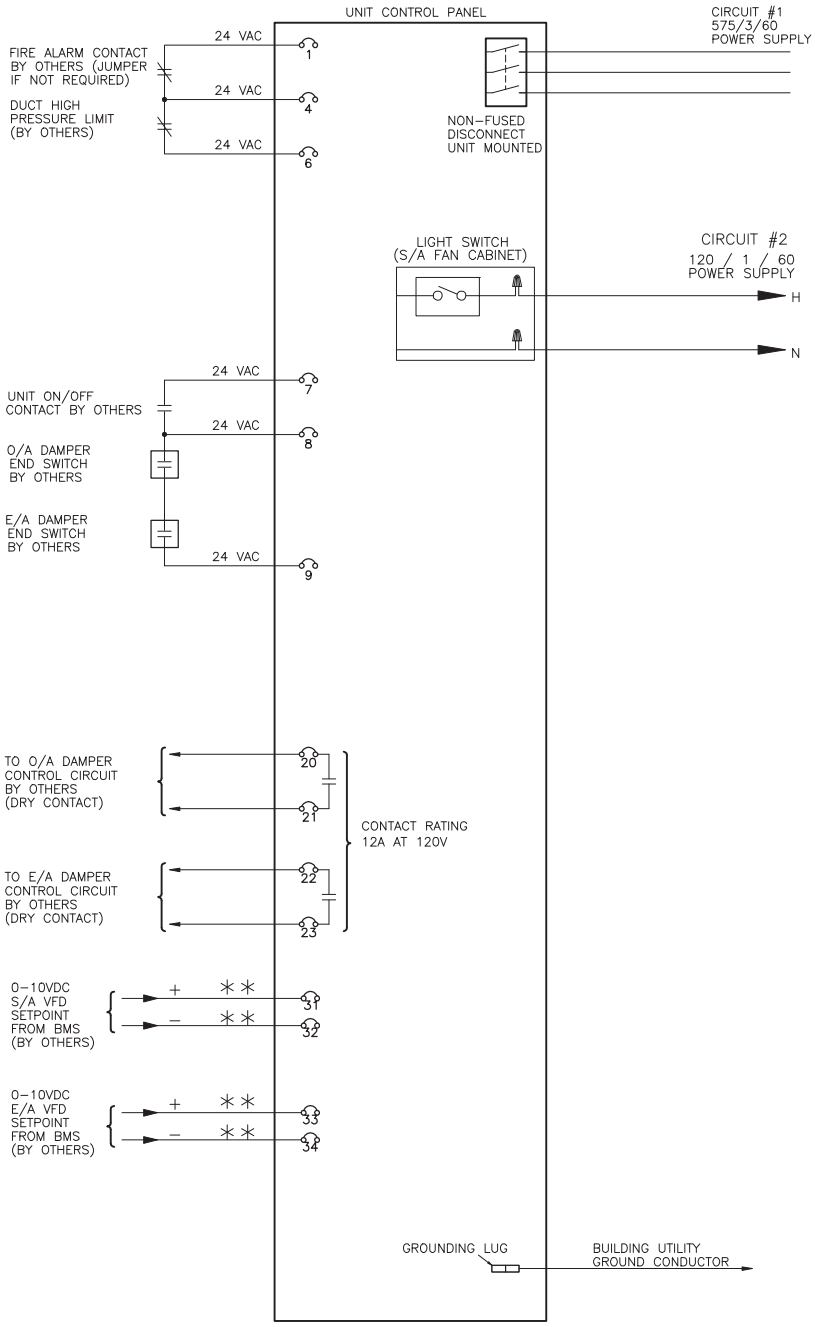

MAXIMUM CONTROL CIRCUIT AMPACITY 6.3 AMPS AT 24 VAC

** SHIELDED WIRE IS REQUIRED WITH BMS ANALOG SIGNALS.
TAPE THE GROUND WIRE AND SHIELD TO PREVENT GROUNDING.
TAPE THE ENDS OF ALL UNUSED WIRES.

1. FIELD WIRING VOLTAGE DROP NOT TO EXCEED 10%.
2. ALL WIRING SHOWN SHALL BE COMPLETED BY INSTALLER.
3. ALL WIRING TO COMPLY WITH THE CANADIAN ELECTRICAL CODE.

EngA® ENGINEERED AIR®	TAG: AHU-2		FIELD WIRING DIAGRAM LM SERIES
	REVISION: AUG 22, 2018	DRN.BY: HMC	DWG.NO: M19012F-01-1
	DATE: MJUN 14, 2018	CHKD.BY: KWL	

EngA ENGINEERED AIR

Unit Sound Data

August 23, 2018

JOB NAME: M19012 (J203)

JOB NUMBER:

INSTALLATION:

UNIT TAG: AHU-2

UNIT CONSTRUCTION:

CASING METAL:	16 ga	INSULATION DEPTH:	2 in
LINER METAL:	22 Thru-out	INSULATION DENSITY	3.0 lbs /cu.ft.

SOUND SOURCE DATA:

Blower	Make	Type	Size	Qty	Total CFM	TSP ("wc)	Speed (rpm)	BHP (hp)		Sound Power Data 63	125	250	500	1000	2000	4000	8000
S/A	TwinCity	BAE DIDW	182	1	8370	3.6	2003	6.69	Inlet	91	91	94	93	86	81	78	74
									Outlet	98	96	94	91	86	82	79	75
E/A	TwinCity	BAE DIDW	182	1	7930	2.3	1736	4.33	Inlet	88	89	90	89	81	78	74	70
									Outlet	94	93	92	85	83	80	76	70

UNIT S/A OUTLET:

CENTER FREQUENCY (Hz)	63	125	250	500	1000	2000	4000	8000	A-weighted
SOUND POWER Lw (dB)	98.0	96.0	94.0	91.0	86.0	82.0	79.0	75.0	92.5

UNIT O/A INLET:

CENTER FREQUENCY (Hz)	63	125	250	500	1000	2000	4000	8000	A-weighted
SOUND POWER Lw (dB)	86.4	91.0	94.0	92.4	85.4	80.4	75.8	71.8	92.4

UNIT E/A OUTLET:

CENTER FREQUENCY (Hz)	63	125	250	500	1000	2000	4000	8000	A-weighted
SOUND POWER Lw (dB)	94.0	93.0	92.0	85.0	83.0	80.0	76.0	70.0	89.0

UNIT R/A INLET:

CENTER FREQUENCY (Hz)	63	125	250	500	1000	2000	4000	8000	A-weighted
SOUND POWER Lw (dB)	83.4	89.0	90.0	88.4	80.4	77.4	71.9	67.9	88.4

UNIT CASING *:

CENTER FREQUENCY (Hz)	63	125	250	500	1000	2000	4000	8000	A-weighted
SOUND POWER Lw (dB)	86.0	81.8	78.5	71.3	59.3	52.5	49.2	44.9	73.4

* Unit casing sound includes casing breakout and sound sources outside the air streams only. Sound from openings are not included in unit casing sound.

Note:

DAFCO FILTRATION GROUP®

SERIES 400 PLEATED AIR FILTER

MERV 10

AEROSTAR®

- *High Capacity achieves MERV 10*
- *Standard Capacity achieves MERV 8*
- *Extremely low resistance to air-flow minimizes energy costs*
- *100% synthetic media is moisture resistant and will not promote biological growth*
- *Advanced media does not rely on electrostatic charge for efficiency*

100% Recycled Paperboard®
MINIMUM 35% POST CONSUMER CONTENT

CANADA GREEN BUILDING COUNCIL • CONSEIL DU BÂTIMENT DURABLE DU CANADA • MEMBER

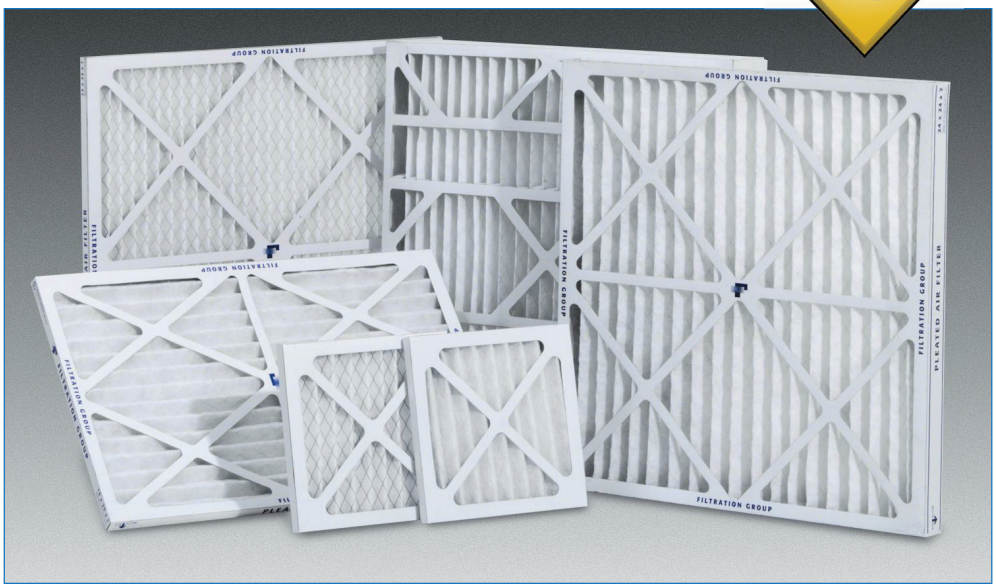

DESCRIPTION

The Aerostar® Series 400 pleated air filter utilizes a state-of-the-art 100% synthetic media to achieve exceptionally high levels of efficiency with the lowest resistance to air flow available. The media is laminated to an expanded metal grid on the air exiting side to provide exceptional strength during installation. The media support grid prevents fluttering and maintains pleat uniformity for optimum performance. The filter pack is enclosed in a heavy-duty, moisture resistant die-cut frame that will not warp, crack, or distort under normal operating conditions.

The 1" and 2" depth filters handle air velocities up to 500 fpm; 4" depth filters up to 625 fpm. Aerostar Series 400 pleats are recommended for most commercial and industrial applications to protect people and equipment, or as pre-filters to even higher efficiency air filters.

BENEFITS

The improved Aerostar Series 400 pleated filter has independent test lab data confirming exceptionally high levels of airborne particle removal with the lowest resistance to air flow available.

- Series 400 HC model achieves MERV 10
- Series 400 SC model achieves MERV 8
- Series 400 HC model initial resistance of 0.17" w.g. @ 500 fpm
- Series 400 SC model initial resistance of 0.19" w.g. @ 500 fpm
- Higher levels of filtration make the Series 400 extremely effective removing many airborne irritants such as pollens, molds, dander, and dust.
- Low resistance improves air flow and can greatly reduce energy costs
- Series 400 pleat filters can be a valuable tool in achieving points for USGBC - LEED certification projects.

APPLICATIONS

Aerostar Series 400 pleated air filters are designed for use in commercial buildings, hotels, industrial filtration, airports, school and universities, or any application desiring higher levels of air filtration to protect occupants from airborne irritants and protect cooling coils, ductwork, and other components of the HVAC system from dust and dirt.

SERIES 400 PLEATED AIR FILTER

AEROSTAR®

DIMENSIONS AND PERFORMANCE DATA

FILTER DEPTH	MEDIUM VELOCITY	INITIAL RESISTANCE MEDIUM (" w.g.) STD CAP	HIGH CAP	HIGH VELOCITY	INITIAL RESISTANCE HIGH (" w.g.) STD CAP	HIGH CAP	FINAL RESISTANCE (ALL FILTERS)
1"	375	0.18	0.15	500	0.38	0.30	1.0
2"	375	0.13	0.11	**500**	**0.19**	**0.17**	1.0
4"	500	0.12	0.11	625	0.18	0.17	1.0

APPLICATION PARAMETERS

Recommended Temperature: 200° F
Recommended Final Resistance: 1.0" w.g.
Frame: 100% Recycled Paperboard

PART NUMBER STD CAP	PART NUMBER HIGH CAP	NOMINAL SIZE*	CFM CAPACITIES MEDIUM	CFM CAPACITIES HIGH
10403	10476	8 x 16 x 1	325	450
10404	10477	10 x 10 x 1	250	350
10364	10436	10 x 20 x 1	525	700
10405	10478	10 x 24 x 1	625	825
10406	10479	10 x 25 x 1	650	850
10365	10437	12 x 12 x 1	375	500
10407	10480	12 x 16 x 1	500	650
10366	10438	12 x 20 x 1	625	825
10367	10439	12 x 24 x 1	750	1000
10368	10440	12 x 25 x 1	775	1025
10369	10441	14 x 20 x 1	725	975
10408	10481	14 x 24 x 1	875	1150
10370	10442	14 x 25 x 1	900	1200
10371	10443	15 x 20 x 1	775	1050
10409	10482	15 x 25 x 1	975	1300
10410	10483	16 x 16 x 1	650	875
10372	10444	16 x 20 x 1	825	1100
10411	10484	16 x 24 x 1	1000	1325
10373	10445	16 x 25 x 1	1050	1400
10412	10485	18 x 18 x 1	850	1125
10413	10486	18 x 20 x 1	925	1250
10414	10487	18 x 22 x 1	1025	1375
10415	10488	18 x 24 x 1	1125	1500
10374	10446	18 x 25 x 1	1175	1550
10375	10447	20 x 20 x 1	1050	1400
10416	10489	20 x 24 x 1	1250	1650
10376	10448	20 x 25 x 1	1300	1750
10417	10490	22 x 22 x 1	1250	1675
10377	10449	24 x 24 x 1	1500	2000
10378	10450	25 x 25 x 1	1625	2150
10418	10491	10 x 10 x 2	250	350
10379	10451	10 x 20 x 2	525	700
10419	10492	12 x 20 x 2	625	825
10380	10452	12 x 24 x 2	750	1000
10381	10453	14 x 20 x 2	725	975
10382	10454	14 x 25 x 2	900	1200
10383	10455	15 x 20 x 2	775	1025
10420	10493	16 x 16 x 2	650	875
10384	10456	16 x 20 x 2	825	1100
10385	10457	16 x 24 x 2	1000	1325
10386	10458	16 x 25 x 2	1050	1400
10421	10494	18 x 22 x 2	1025	1375
10387	10459	18 x 24 x 2	1125	1500
10422	10495	18 x 25 x 2	1175	1550
10388	10460	20 x 20 x 2	1050	1400
10389	10461	20 x 24 x 2	1250	1650
10390	10462	20 x 25 x 2	1300	1750
10391	10463	24 x 24 x 2	1500	2000
10392	10464	25 x 25 x 2	1625	2150
10393	10465	12 x 24 x 4	1000	1250
10394	10466	16 x 20 x 4	1100	1400
10395	10467	16 x 25 x 4	1400	1750
10396	10468	18 x 24 x 4	1500	1875
10397	10469	20 x 20 x 4	1400	1750
10398	10470	20 x 24 x 4	1657	2100
10399	10471	20 x 25 x 4	1750	2200
10400	10472	24 x 24 x 4	2000	2500
10401	10473	25 x 29 x 4	2525	3150
10402	10474	28 x 30 x 4	2900	3650

*Contact Customer Service for special and actual sizes.

INITIAL RESISTANCE

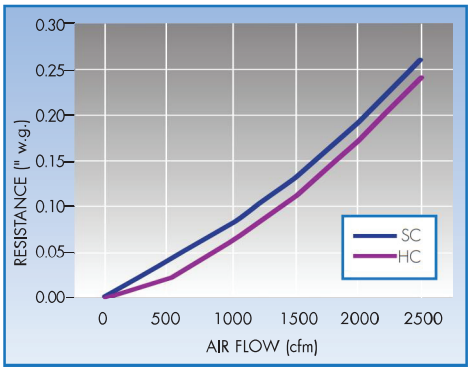

FRACTIONAL EFFICIENCY

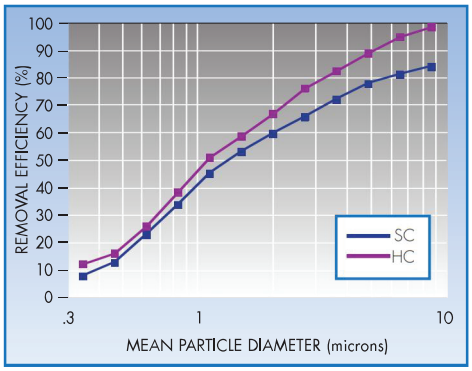

SERIES 400 ENGINEERING SPECIFICATIONS

1.0 General

1.1 Filters shall be Aerostar® Series 400 extended surface pleated air filters as manufactured by Dafco Filtration Group.
1.2 Filters shall be available in standard and high capacity configurations and available in nominal depths of 1", 2", and 4".
1.3 Underwriters Laboratories classified to UL 900.

2.0 Filter Materials of Construction

2.1 Media shall be 100% synthetic, mechanical media that does not support microbial growth.
2.2 Frame shall be a heavy duty, high strength, moisture resistant paperboard with a cross member design that increases filter rigidity and prevents breaching. Frame shall be made with 100% recycled paperboard with an average of 35% post-consumer content. Frame shall be recyclable.
2.3 Filters shall have an expanded metal support grid bonded to the air-exiting side of the filter to maintain pleat uniformity and prevent fluttering. Metal support grid shall be recyclable and contain a significant amount of post-consumer and pre-consumer content.

3.0 Filter Performance

3.1 Filters shall be MERV 10 in a high capacity configuration and MERV 8 in a standard capacity configuration in all filter depths when fully tested in accordance with the ASHRAE 52.2-2007 Test Standard.
3.2 Initial resistance of filters shall not exceed the following:

Filter Depth	Flow Rate (fpm)	Initial Resistance Standard Capacity Filter	Initial Resistance High Capacity Filter
1"	375	0.18" w.g.	0.15" w.g.
2"	500	0.19" w.g.	0.17" w.g.
4"	500	0.12" w.g.	0.11" w.g.

3.3 Filters shall be rated to withstand a continuous operating temperature up to 200°F.
3.4 Filters shall have a recommended final resistance of 1.0" w.g.

Distributed by:

DAFCO FILTRATION GROUP®

Phone: 1-888-628-3458
www.dafcofiltrationgroup.com ■ e-mail: info@dafcofiltrationgroup.com

© DFG 01/12

WHEN CLEAN AIR MATTERS

DAFCO FILTRATION GROUP®

GEOPLEAT®

AEROSTAR®

GEOPLEAT®

- *Advanced pleat design for even dust loading and maximum service life*
- *High impact plastic frame for harsh environments*
- *Very low resistance to air flow results in lower energy costs*
- *Underwriters Laboratories classified to UL 900*
- *Robust filter media resists tearing or damage*
- *Lightweight and compact design saves shipping and storage space*
- *Completely incinerable*
- *Sustainable component for a LEED Green Building initiative*
- *Exceeds LEED MERV 13 efficiency requirement*

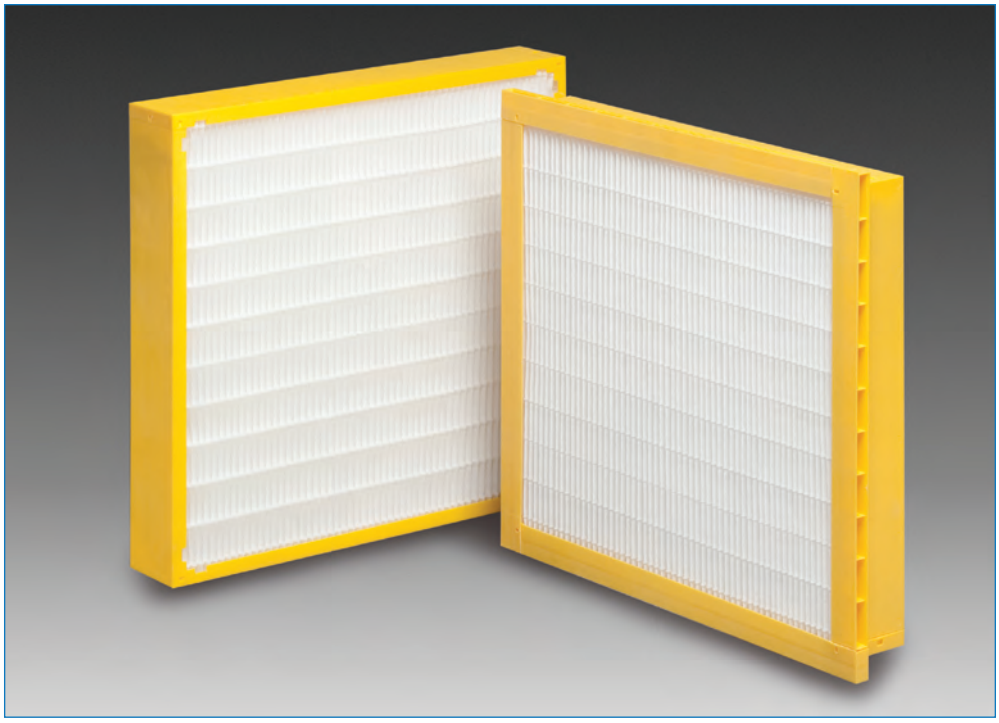

DESCRIPTION

The new GeoPleat's advanced pleating technology increases media area per filter, reducing resistance to air flow and maximizing service life. The GeoPleat is designed to perform in nearly any HVAC installation and will not warp or collapse over time.

The GeoPleat frame is formed with high impact plastic to precise dimensions for a secure fit in either housing or holding frames. The frame is impervious to moisture, rigid, and exceptionally lightweight for safe and easy handing and installation.

Pleats are thermoformed at the tips to maintain integrity. Uniformed beads of foamed hot-melt separate the pleats to the most efficient and exacting tolerances to lower air drag across the filter. The media pack is adhesively bonded on all four sides of the filter frame, eliminating the possibility of air by-pass around the filter media.

BENEFITS

Low Air Flow Resistance

GeoPleat's improved media and pack design combine for the lowest pressure drop available in a compact rigid box filter. The lower pressure drop leads to considerable energy savings in variable drive HVAC systems.

Longer Filter Life

The New GeoPleat now has 30% more media per filter, lowering media velocity and expanding the dust holding capacity. Increased media and higher DHC extend and maximize the life of the filter. Longer filter life reduces labor and disposal footprint of used filters.

Lightweight

The GeoPleat is extremely light in weight allowing for easier and less expensive transportation, handling, safe installation and removal. GeoPleat weighs up to 75% less than competitive 12" filters. It is specifically recommended for applications with space constraints, roof-top air handling units, or anywhere a safer filter installation is desired.

Robust Media

The media is extremely durable, designed to resist damage from shipping, handling, and installation. The media is resistant to moisture and microbial growth.

CANADA GREEN BUILDING COUNCIL • CONSEIL DU BÂTIMENT DURABLE DU CANADA • MEMBER

GEOPLEAT®

AEROSTAR

DIMENSIONS

SINGLE HEADER				BOX STYLE				
PART NO. MERV 11	PART NO. MERV 13	PART NO. MERV 14	PART NO. MERV 15	PART NO. MERV 11	PART NO. MERV 13	PART NO. MERV 14	PART NO. MERV 15	SIZE
21605	21613	21621	728542	21629	21637	21645	718542	24 x 12 x 4
21609	21617	21625	728506	21633	21641	21649	718506	20 x 16 x 4
21606	21614	21622	728500	21630	21638	21646	718500	20 x 20 x 4
21611	21619	21627	728548	21635	21643	21651	718548	24 x 18 x 4
21607	21615	21623	728540	21631	21639	21647	718540	24 x 20 x 4
21608	21616	21624	728544	21632	21640	21648	718544	24 x 24 x 4
21610	21618	21626	728556	21634	21642	21650	718556	25 x 16 x 4
21612	21620	21628	728550	21636	21644	21652	718550	25 x 20 x 4

INITIAL RESISTANCE (24 x 24 x 4 – BOX STYLE)

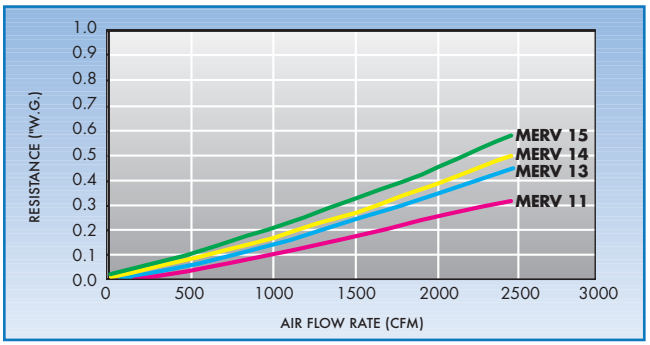

EFFICIENCY PER ASHRAE 52.2 (24 x 24 x 4 – BOX STYLE)

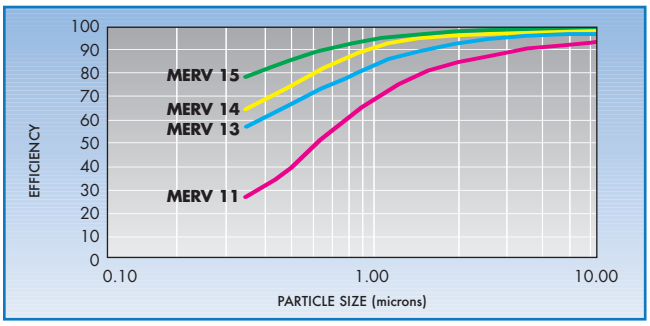

GEOPLEAT ENGINEERING SPECIFICATIONS

1.0 General
- 1.1 Filters shall be Aerostar® GeoPleat mini-pleat air filters as manufactured by Filtration Group.
- 1.2 Underwriters Laboratories classified to UL 900 and ULC-S11077.
- 1.3 Filters shall be available in a nominal depth of 4".
- 1.4 Filters are manufactured by an ISO 9001 registered company.

2.0 Filter Material of Construction
- 2.1 Media shall be 100% synthetic gradient dual density media that does not support microbial growth.
- 2.2 Frame shall be constructed with high-impact plastic and impervious to moisture and high humidity.
- 2.3 Media pack shall be adhered to plastic frame on all sides to prevent air by-pass.
- 2.4 Filter shall have a hot melt bead separator to maintain pleat pack stability and ensure consistent pleat spacing for optimum air flow.

3.0 Filter Performance
- 3.1 Filters shall be available in MERV 11 for low efficiency, MERV 13 and MERV 14 for medium efficiency, and MERV 15 for high efficiency when tested in accordance with ASHRAE 52.2-2007 Test Standard.
- 3.2 Initial resistance of filters shall not exceed the following:

Flow Rate	Initial Resistance			
(fpm)	MERV 11	MERV 13	MERV 14	MERV15
500	0.24" w.g.	0.33" w.g.	0.39" w.g.	0.43" w.g.

- 3.3 Filters shall be rated to withstand a continuous operating temperature of up to 150°F.
- 3.4 Filters shall have a max recommended final resistance of 1.5" w.g.
- 3.5 Changing filters at a lower resistance may save operating costs.

PERFORMANCE DATA (24 x 24 x 4 – BOX STYLE)

	MERV 11			MERV 13			MERV 14			MERV 15		
Air Flow (cfm)	1500	**2000**	2500	1500	**2000**	2500	1500	**2000**	2500	1500	**2000**	2500
Initial Pressure Drop ("w.g.)	0.15	**0.24**	0.36	0.23	**0.33**	0.44	0.27	**0.39**	0.52	0.30	**0.43**	0.57



Durable media pack resists damage



Shown with 2" clip designed to hold an optional pre-filter



Available in both box style and single header design

Distributed by:

DAFCO FILTRATION GROUP®

© DFG 03/13

WHEN CLEAN AIR MATTERS

Phone: 1-888-628-3458
www.dafcofiltrationgroup.com ■ e-mail: info@dafcofiltrationgroup.com

SPECIFICATIONS

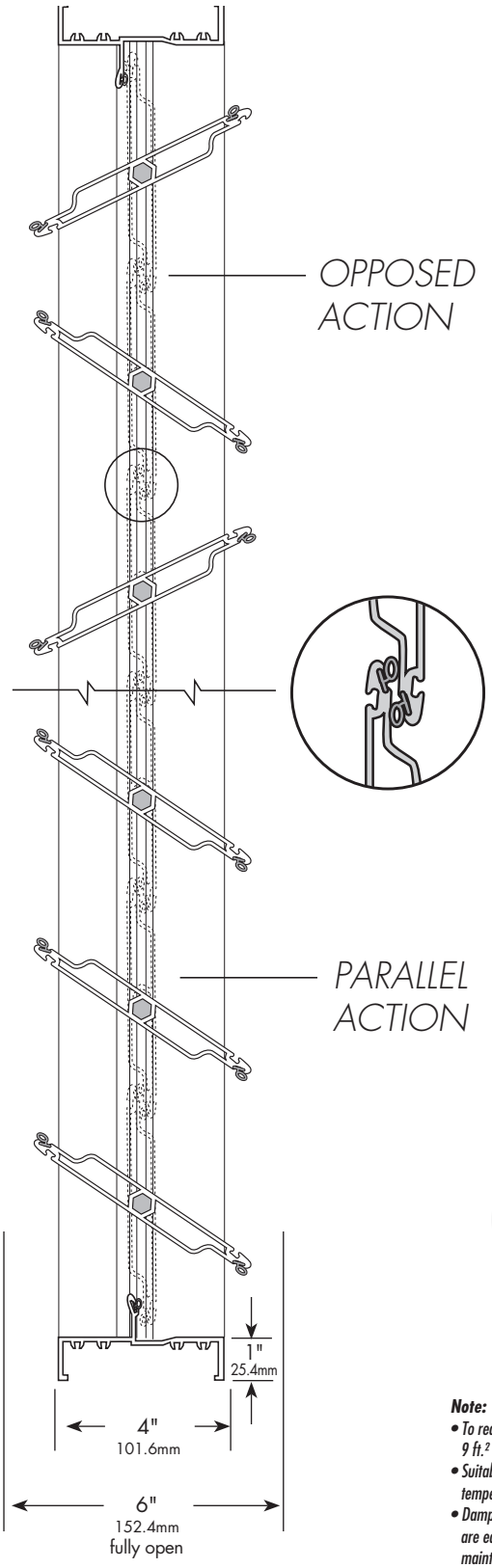

SERIES 1000
AIR-FOIL CONTROL DAMPER

- Extruded aluminum (6063T5) damper frame is not less than .080" (2.03mm) in thickness. Damper frame is 4" deep.
- Blades are extruded aluminum (6063T5) profiles.
- Blade gaskets are extruded EPDM. Frame seals are extruded TPE thermoplastic. Gaskets are secured in an integral slot within the aluminum extrusions.
- Bearings are composed of a celcon inner bearing fixed to a 7/16" (11.11mm) aluminum hexagon blade pin rotating within a polycarbonate outer bearing inserted in the frame, resulting in no metal-to-metal or metal-to-plastic contact.
- Linkage hardware is installed in the frame side and constructed of aluminum and corrosion-resistant, zinc-plated steel, complete with cup-point trunnion screws for a slip-proof grip.
- Dampers are designed for operation in temperatures ranging between -40°F (-40°C) and 212°F (100°C).
- Dampers are available with either opposed blade action or parallel blade action.
- Air leakage through a 48" x 48" (1220mm x 1220mm) damper does not exceed 10.3 cfm/ft.² (52 l/s/m²) against 4" (1kPa) w.g. differential static pressure at standard air. Standard air leakage data is certified under the AMCA Ratings Program.
- Pressure drop of a fully open 48" x 48" (1220mm x 1220mm) damper does not exceed .02" (.004 kPa) w.g. at 1000 fpm (5.08 m/s).
- Dampers are made to size required without blanking off free area.
- Dampers are available in two mounting types: i.e., "Installed in Duct" or "Flanged to Duct".
- Installation of dampers must be in accordance with manufacturer's installation guidelines.

"FLANGED TO DUCT" TYPE
2" added to duct width & height dimensions

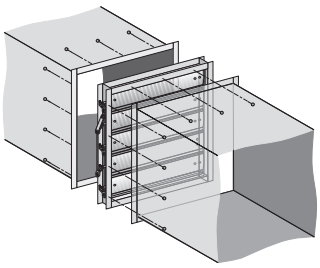

Note:
- *To reduce pressure drop, use "Flanged to Duct" type for sizes under 9 ft.² (.83m²).*
- *Suitable for operation in breathable air environments within stated temperature range.*
- *Dampers sized for duct openings exceeding 37½" (953mm) in height are equipped with a stiffener bar at mid-height to strengthen and maintain air leakage tolerances.*
- *For open blade clearance in tight spaces, consider the Series 1400 – 4" wide air-foil blade option.*

"INSTALLED IN DUCT" TYPE
½" deducted for clearance from width & height dimensions unless otherwise specified

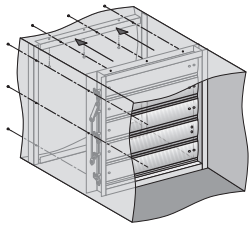

For additional information, refer to:
- *Series 1000 Product Brochure*
- *Series 1000 Pressure Drop*
- *Aluminum Standard Configurations*
- *Series 1000 Damper Free Area Charts*
- *TAMCO Aluminum Damper Torque Requirements*
- *Multiple-Section Horizontal Jackshafts*
- *Configurations Using Vertical Jackshafts*
- *Multiple-Section Damper Jumpers*
- *Square-to-Round Transition Option*
- *Installation Guidelines For Tamco Dampers*
- *Series 1400 – 4" Wide Air-Foil Blade Control Damper Specification Sheet*
- *Series 1400 – 4" Wide Air-Foil Blade Control Damper Free Area Charts*

TAMCO
www.tamco.ca

TAMCO 2000 / PRINTED IN CANADA

System 350™ A350P Electronic Proportional Plus Integral Temperature Control

The A350P is an electronic, proportional plus integral temperature control with analog 0 to 10 VDC and 0 to 20 mA outputs. The control is equipped with three user-selectable time integration constants and an adjustable throttling range of 2 to 30F° (1 to 17C°). Two models cover a setpoint range of -30 to 130°F (-35 to 55°C) and 90 to 250°F (32 to 121°C).

As are all System 350™ products, the A350P control is housed in a NEMA 1, high-impact plastic enclosure. The modular design provides easy, plug-together connections for quick installation and future expandability.



Figure 1: A350P Electronic Proportional Plus Integral Temperature Control

Features and Benefits

❑ **Modular Design**	Enables stage, display, and power modules to be purchased and installed as needed
❑ **Plug-Together Connectors and 35 mm DIN Rail Mounting**	Eliminates wiring between modules, which reduces installation costs
❑ **Two Models Cover a Wide Setpoint Range of -30 to 250°F (-35 to 121°C)**	Reduces inventory by encompassing temperature ranges required to support the majority of Heating, Ventilation, Air Conditioning, and Refrigeration (HVAC/R) applications
❑ **Minimum Output Adjustable from 0 to 60%**	Tailors the output to the requirements of the controlled device; can be used to set minimum valve or damper position
❑ **Adjustable Throttling Range of 2 to 30F° (1 to 17C°)**	Enables the user to tune the system for optimum stable performance
❑ **Field-selectable Reverse or Direct Acting Mode**	Works in heating or cooling applications
❑ **Three User-Selectable Integration Time Constants**	Provides selection of the integration constant for applications requiring proportional plus integral control
❑ **Interchangeable Temperature Sensors**	Increase versatility and serviceability

© 2014 Johnson Controls, Inc.
Part No. 24-7664-192, Rev. G
Code No. LIT-930020

Application

The A350P Temperature Control can be used as a standalone device or in conjunction with plug-together accessory modules. The addition of S350 Stage Modules allows for the control of multiple stage HVAC/R applications. Typical application for the A350P includes:

- proportional heating control with staged direct expansion cooling
- simple temperature control for air handling units
- modulating damper actuators for mixed air control
- simple proportional mixed air control

A typical System 350 Temperature Control setup includes the following:

- A350P Temperature Control
- A99B Series Temperature Sensor
- Y350R Power Module (or 24 VAC Class 2 transformer)
- S350 Stage Modules
- D350 Digital Temperature Display Module

Operation

The A350P control operates on 24 VAC/VDC and provides two simultaneous analog outputs: 0 to 10 VDC and 0 to 20 mA. A cover-mounted, 10-segment Light-Emitting Diode (LED) bar graph indicates percentage of output.

Features include:

- adjustable setpoint
- adjustable minimum output
- adjustable throttling range (proportional band)
- selectable integration time constant
- selectable Reverse Acting (RA) or Direct Acting (DA) mode of operation

IMPORTANT:	All System 350 controls are designed for use **only** as operating controls. Where an operating control failure would result in personal injury and/or loss of property, it is the responsibility of the installer to add devices (safety, limit controls) or systems (alarm, supervisory systems) that protect against, or warn of, control failure.

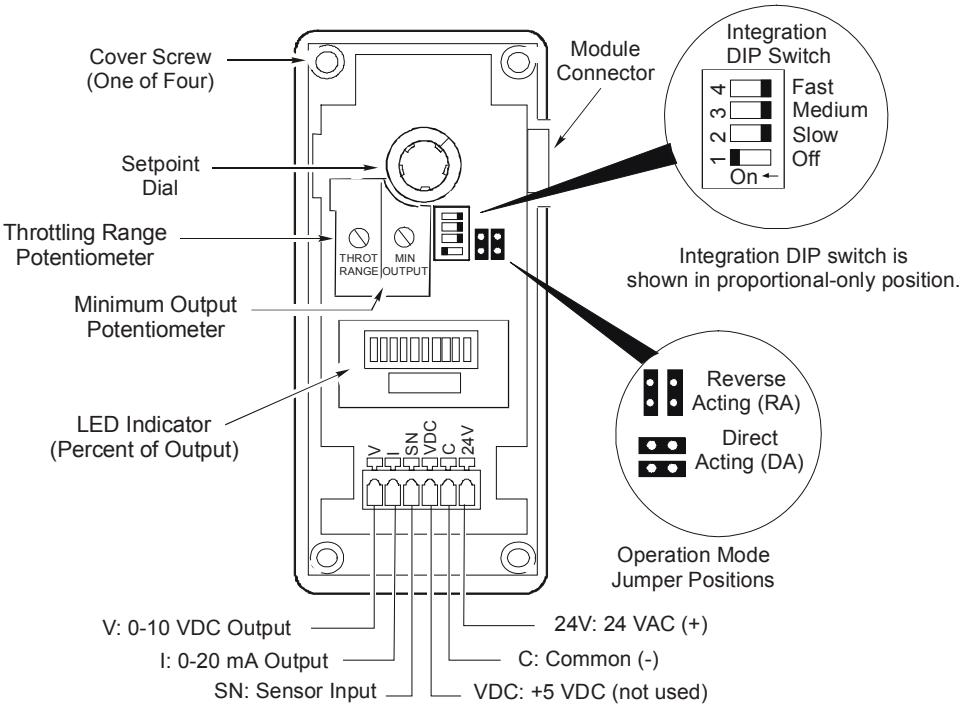

Figure 2: Interior View Showing A350P Control's Features

Minimum Output Adjustment

The minimum output adjustment sets the minimum voltage or milliampere output provided by the A350P control. It can be adjusted from 0 to 60% (0 to 6 VDC or 0 to 12 mA) of the output range.

Example:

A controlled device responding to a 4-20 mA output would require the minimum output to be adjusted to 20% or 4 mA. (See Figure 3.) The minimum output adjustment may also be used to set valves or dampers to minimum positions.

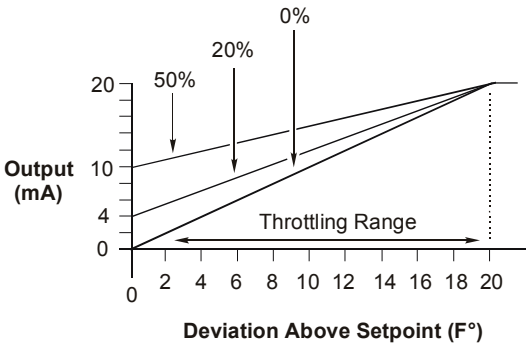

Figure 3: Output vs. Deviation from Setpoint for: Minimum Output = 0, 20, and 50%, Throttling Range = 20°F (DA)

Make the adjustment at the minimum output potentiometer marked as MIN OUTPUT. (See Figure 2.) For each 10% increase in output, the **next** bar on the LED indicator will light (only one bar is lit at any time).

Note: Before setting the minimum output potentiometer, verify that the control reads zero output (that is, no LEDs are lit).

Throttling Range (Proportional Band)

The throttling range is the range over which a control is active. Throttling range for the A350P control can be adjusted from 2 to 30F° (1 to 17C°). Make the adjustment at the throttling range potentiometer marked THROT RANGE (see Figure 2).

Integration Function

Proportional-only controls cannot hold a process at the exact setpoint. A proportional offset is always present because the control output is 0% at setpoint. Any load on the system will cause the control point to be offset from the setpoint. The greater the load on the system, the further the control point will be offset from the setpoint. (This is commonly referred to as proportional offset, and under maximum load this error will approach the throttling range.)

Some proportional-only controls are designed with their setpoint located midway through the proportional band to help compensate for this offset. This results in a plus/minus error from the setpoint rather than a single-ended error. Refer to Figure 4.

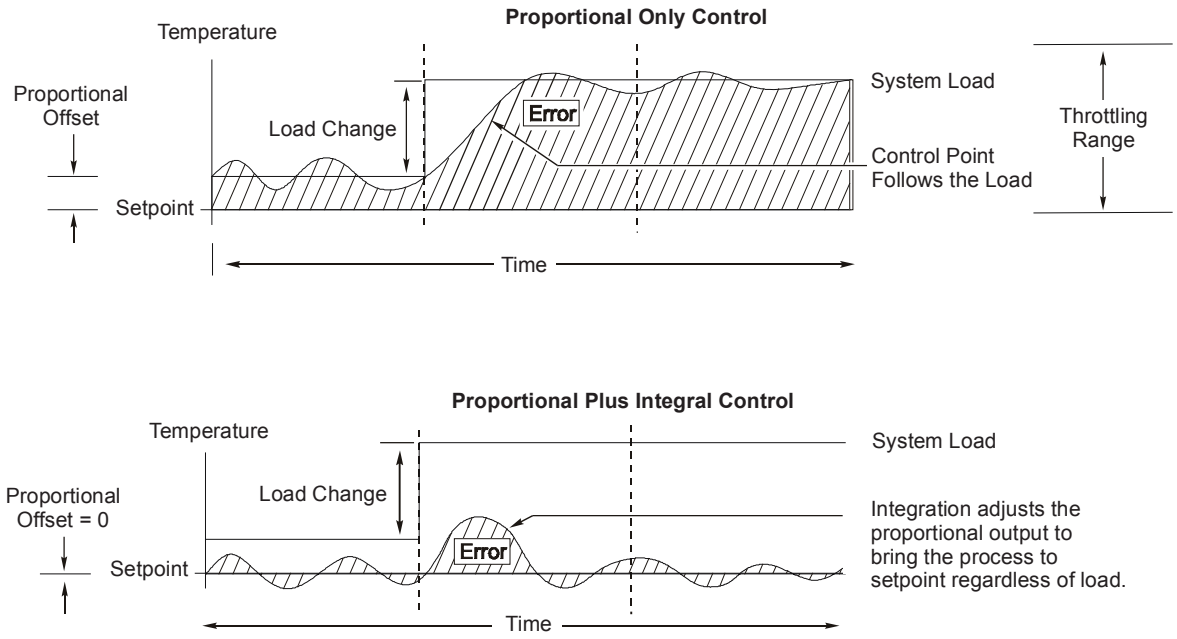

Figure 4: Comparison Between Proportional Only and Proportional Plus Integral Control

The A350P control has an integration feature that forces the control point to match the setpoint. Over time, the A350P will control the heating/cooling equipment to balance the system load at the control setpoint. (See Figure 4.)

On traditional proportional plus integral controls, the amount of correction will become too large if the system load exceeds the capacity of the equipment. When the actuated device (valve or damper) is fully open or closed and the setpoint still cannot be reached, the integration error continues to grow. The result is called *integral windup*.

The A350P control avoids *integral windup* with a patented circuit that puts a dynamic ceiling on the integrator. This resets the integration error when the sensor goes just above the setpoint plus the throttling range (in DA mode) or just below the setpoint minus the throttling range (in RA mode). This allows the process to recover from an out-of-range condition without a large overshoot.

The A350P control has three field-selectable integration constants and an off position. The integration DIP switch selects the integration constant. (See Figure 2 for location.)

The field-selectable integration constants include:

- **OFF: Switch 1 to On position, all others Off** provides proportional-only operation.

Note: In open-loop (without feedback) applications, select OFF (proportional-only) operation.

- **Slow (C3): Switch 2 to On position, all others Off** is the slowest integration constant (26 minute), and is suitable for most proportional plus integral applications. Slow is the recommended initial setting.
- **Medium (C2): Switch 3 to On position, all others Off** selects a 13-minute integration constant. If the rate of system recovery to setpoint is sluggish with the control set to slow, and if the system has enough capacity to drive the process to setpoint at a faster rate, the medium setting may be used.
- **Fast (C1): Switch 4 in On position, all others Off** is the fastest integration constant (6.5 minutes). Use fast only in instances where the rate of change at the sensor is extremely rapid and system capacity can compensate for that rapid change.

Reverse or Direct Acting Operation

With the operation jumpers in the Reverse Acting (RA) position, the analog output increases as the temperature drops below setpoint. (See Figure 5.)

With the operation jumpers in the Direct Acting (DA) position, the analog output will increase as the temperature rises above the setpoint.

Select the RA/DA mode by positioning the operation jumpers vertically or horizontally. (See Figure 2.) Position the operation jumpers vertically for RA and horizontally for DA.

The RA/DA operation jumpers are installed in the RA mode at the factory.

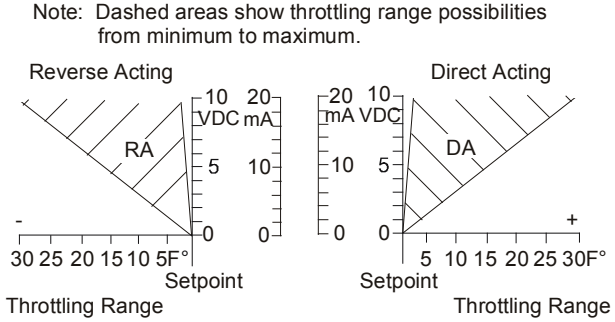

Figure 5: RA and DA Proportional Bands Shown in Proportional-Only Mode

Add-on Modules

The maximum number of add-on modules is listed in Table 1.

Table 1: Maximum Number of S350 Stage Modules per A350P

Power Source	Number of S350A or S350C Stage Modules Allowed	Number of S350A or S350C Modules (with One S350P) Allowed	Number of S350A or S350C Modules (with Two S350Ps) Allowed
Y350R	4	2	0
External Class 2 Transformer	9	8	7

S350A On-Off Stage Modules

S350A On-Off stage modules receive power, setpoint, and sensor input from the A350P control. S350A stage modules perform switching functions based on the control's setpoint and sensor information, as well as the offset and differential selected at the S350A stage module.

For more information on these modules, refer to the *System 350™ S350 Temperature, S351 Humidity, and S352 Pressure On/Off Stage Modules Product/Technical Bulletin (LIT-930080)*.

S350C Slave Stage Module

S350C slave stage modules receive power and sensor input from the A350P control. S350C slave stage modules perform switching functions based upon the control's sensor information, as well as the setpoint and differential selected at the S350C stage module.

For more information on these modules, refer to the *System 350™ S350C Temperature Slave Stage Module Product/Technical Bulletin (LIT-930084)*.

S350P Proportional Stage Modules

S350P proportional stage modules receive power, setpoint, and sensor input from the A350P control. The S350P stage module responds with an analog 0 to 10 VDC and 0 to 20 mA output signal. This is based upon the control's setpoint and sensor information, as well as the offset, throttling range, and minimum output selected at the S350P stage module.

For more information on these modules, refer to the *System 350™ S350P Proportional Plus Integral Temperature Stage Module Product/Technical Bulletin (LIT-930086)*.

Dimensions

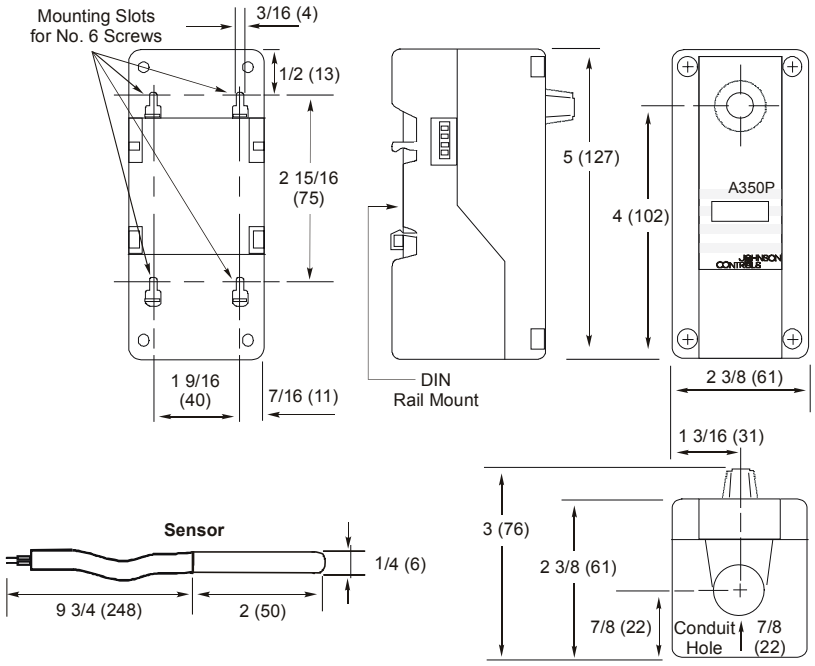

Figure 6: A350P Control and Sensor Dimensions, in. (mm)

Installation and Wiring

Celsius Scale Conversion

A Celsius scale throttling range decal is included with the A350P control. If the Celsius scale is desired:

1. Locate the throttling range and minimum output potentiometers on the main PC board. (See Figure 2.) Carefully remove the knobs and the existing decal.
2. Apply the Celsius scale decal in the same place as the original decal.
3. Rotate both knob stems completely counterclockwise (CCW).
4. Reinstall the potentiometer knobs so the arrows point to the minimum values.

The A350P Temperature Control is housed in a compact NEMA 1 plastic enclosure designed for standard 35 mm DIN rail mounting. Four key-slot mounting holes on the back of the control case are provided should surface mounting be required. If a Y350R is used, it should be mounted immediately to the right of the control. Any S350 modules would follow on the right, with the D350 being the last module mounted, also on the right.

Note: When mounting any System 350 module to rigid conduit, attach the hub to the conduit before securing the hub to the control enclosure.

WARNING: Risk of Electrical Shock.
Disconnect the power supply before making electrical connections. Contact with components carrying hazardous voltage can cause electric shock and may result in severe personal injury or death.

AVERTISSEMENT: Risque de décharge électrique.
Débrancher l'alimentation avant de réaliser tout branchement électrique. Tout contact avec des composants conducteurs de tensions dangereuses risque d'entraîner une décharge électrique et de provoquer des blessures graves, voire mortelles.

Wiring Terminals

Install all wiring to conform to the National Electrical Code and local regulations. For maximum electrical rating of control, refer to the label inside the control cover. Terminals will accept 12 to 26 AWG wire. Use only copper conductors.

1. Use a 1/8 in. (3 mm) flat-blade screwdriver to push the clamp arm down.
2. Insert the appropriate wire into the opening. Refer to Table 2 for terminal designations.
3. Release the clamp arm to secure the wire. See Figure 7.

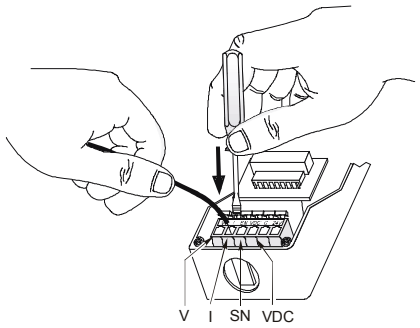

Figure 7: Cage Clamp Terminal Block

Table 2: Terminal Designations

Terminal	Description
V	0 to 10 VDC output
I	0 to 20 mA output
SN	Temperature sensor input
VDC	5 VDC power supply (not used)
C	Common for power supply, temperature sensor, and outputs
24V	24 Volts AC

Note: Output signals from the A350P control vary from 0 to 10 VDC and 0 to 20 mA. (Both outputs can be used simultaneously.) Connections can be made to both the V and I terminals, allowing the control to drive two outputs from the same RA or DA ramp simultaneously. This feature can be used to drive motor actuators of different types in a single application.

Sensor Connection

Shielded cable is not generally required for sensor wiring on runs of less than 50 feet. When using shielded cable, isolate and tape the shield at the sensor. Connect the shield to Terminal C on the A350P control.

Refer to Table 3 for the maximum recommended cable lengths for particular sizes of wire.

Table 3: Maximum Recommended Sensor Cable Lengths

Wire Gauge	Shielded Cable Length	
	Feet	Meters
14 AWG	800	244
16 AWG	500	152
18 AWG	310	94
20 AWG	200	61
22 AWG	124	38

- Various A99B Series Temperature Sensors and mounting hardware are available for use with A350P Series controls.

  The sensor must be connected to Terminals SN and C. (See Figure 2.) The sensors are not polarity sensitive.

- The sensor must be mounted so that it can accurately sense the temperature of the controlled medium.

Table 4: A350P Controls And Sensors

Control	Sensor Included Sensor Lead Length is 9-3/4 in. (0.25 m)
A350PS-1C	A99BB-25C; Range: -40 to 212°F (-40 to 100°C)
A350PS-1CM	A99BB-25C; Range: -40 to 212°F (-40 to 100°C)
A350PS-2C	A99BC-25; Range: -40 to 248°F (-40 to 120°C)
A350PS-2CM	A99BC-25; Range: -40 to 248°F (-40 to 120°C)
A350PT-1C	No Sensor Included
A350BA-2C	A99BC-25; Range: -40 to 248°F (-40 to 120°C)

- For more information regarding sensor options and installation, refer to the *A99B Series Temperature Sensors Product/Technical Bulletin (LIT-125186).*

Adjustments

Follow this procedure to set up the A350P control for the types of operation desired.

1. Remove its cover by loosening the four captive cover screws. (See Figure 2.)
2. Set the RA/DA operation jumpers to the desired mode of operation. Position the operation jumpers vertically for RA (Reverse Acting) or horizontally for DA (Direct Acting). (See Figure 2.)
3. Adjust the throttling range potentiometer to desired setting. Rotate Clockwise (CW) to increase the throttling range.

Notes: Included with the control is a Celsius scale throttling range decal. If the Celsius scale is desired, refer to the *Celsius Scale Conversion* section for decal installation instructions.

If the A350P is to be used in proportional plus integral control, the initial throttling range adjustment is seldom set below 6F° (3C°). A narrow proportional band used in conjunction with the integration may result in unstable control.

4. If minimum output is required, set the minimum output potentiometer (see Figure 2) to the desired position. The 10-segment front LED panel or a voltmeter can be used to read the minimum output. (The minimum setting for the **control** is designated by the 0 on the decal.)

Notes: Before adjusting the minimum output potentiometer, verify that the control reads zero output (that is, no LEDs are lit).

For each 10% increase in output, the **next** bar will light on the LED bar graph (only one bar is lit at anytime). In a milliampere application, each bar equals 2 mA. In a voltage application, each bar equals 1 VDC. (Refer to Figure 3.)

Example:

To set the control for a minimum output of 4 mA, turn the minimum output potentiometer clockwise until the second LED segment just lights.

If the control system does not function properly, verify that the proper operation mode is selected on each module (DA or RA), and perform the following procedures to determine the cause of the problem:

1. Check for proper voltages on the A350P control.
5. Make sure the system is stable in the proportional mode before selecting integration. Refer to the *Checkout Procedure* section.
6. Reinstall the cover and secure in place with the four captive cover screws.
7. Adjust the setpoint dial to the desired setpoint.

   If using the D350 Display Module, press and hold the setpoint button on the D350 while rotating the setpoint dial.

Note: The control's setpoint is factory calibrated at midscale to a tolerance of ±1F° (0.6C°). The setpoint tolerance at the extreme ends of the setpoint scale may be ± 4F° (2.2C°). The D350 Display Module is unaffected by this tolerance shift. Use the D350 for the most accurate setpoint selection.

Checkout Procedure

Follow this procedure to verify the A350P control is connected and functioning properly.

1. Before applying power, make sure that the installation and wiring connections are according to job specifications.
2. Set up the system for proportional mode (Integration = OFF), and make any necessary adjustments to the setpoint, throttling range, and minimum output. Then select Reverse or Direct Acting mode.
3. After making adjustments and electrical connections, apply power to the system, and observe it for stable operation.
4. If integration is required, select the fast (C1), medium (C2), or slow (C3) integration constant. Slow is the recommended initial setting. (Refer to the *Integration Function* section.)
5. Put the system back into operation. If instability occurs, consider increasing the throttling range.

Troubleshooting

a. Connect a digital voltmeter (DVM) between Terminals 24V (+) and C (-) located on the A350P's terminal block. (See Figure 2.)

   If an external transformer is used, select AC volts on the DVM. Verify that the voltage is between 20 and 30 VAC.

If a Y350R Power Module is used, select DC volts on the DVM. Verify that the voltage is between 16 and 38 VDC.

If an external DC power supply is used, select DC volts on the DVM. Verify that the voltage is between 22 and 29 VDC.

b. If the DVM reading is within the indicated voltage range, select DC volts on the DVM (DVM must be accurate to +/-0.01 VDC), and connect the (+) lead to Terminal VDC and the (-) lead to Terminal C.

   If the DVM voltage is between 4.9 and 5.1 VDC, proceed to Step 2.

   If the DVM voltage is above 5.1 VDC, replace the A350P.

c. If the DVM voltage is below 4.9 VDC, check the control using the following procedure.

   Disconnect all loads from the A350P control. (If in Direct Acting mode with power on, the system will go to full output when the sensor is disconnected. Thus, ensure that any loads are disconnected *before* disconnecting the temperature sensor.)

   Disconnect the temperature sensor completely, and recheck the DVM voltage.

   If the DVM voltage rises to a value between 4.9 and 5.1 VDC, replace the sensor.

   If the DVM voltage is still below 4.9 VDC, replace the A350P control.

2. Check sensor for proper resistance at a given temperature. (The resistance across the sensor changes with the temperature of the sensor.)

   a. Disconnect power from the A350P control.

   b. Disconnect the sensor from the control and measure the resistance across sensor leads.

   c. When measuring the sensor's resistance, use an accurate thermometer to measure the temperature at the sensor.

   d. Refer to Figure 8 to determine the optimal resistance for the measured temperature.

   e. If the measured resistance varies substantially from the optimal resistance for that temperature, the sensor or wiring must be replaced.

   f. If the sensor's resistance conforms to the chart in Figure 8, reconnect the sensor to the control.

   g. Reconnect power to the control.

Note: The sensor reading indicated by the D350 may differ somewhat from thermometer readings due to sensor tolerances, time constants, thermometer accuracy, and other factors.

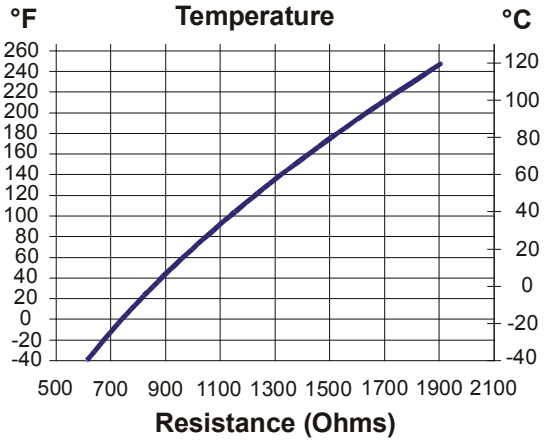

Figure 8: Temperature vs. Resistance Chart for the A99B Series Sensor

3. Check the A350P control for proper operation.

Note: Perform Steps 1 and 2 first.

a. Reconnect the sensor to the control and re-apply power.

b. Turn the throttling range and the minimum output to minimum by turning both potentiometers counterclockwise.

c. Switch off the integration.

d. Select the RA mode.

e. Connect the DVM (+) lead to the A350P control's Terminal SN and the (-) lead to Terminal C.

If the sensor voltage is less than 1.8 VDC on model A350PS-1C or less than 2.3 VDC on model A350PS-2C, go to Step 3g.

f. If the voltage is greater than 1.8 VDC on model A350PS 1C or greater than 2.3 VDC on model A350PS-2C, adjust the setpoint to 120°F (49°C) on model A350PS-1C or 240°F (116°C) on model A350PS-2C.

The output Terminal V should be less than 0.1 VDC, and all LEDs in the bar graph display should be off. If not, replace the A350P.

1. Adjust the minimum output to the maximum by turning the potentiometer CW. As the potentiometer is turned CW, the LEDs in the bar graph should turn on from left to right until the fifth or sixth bar is on. If not, replace the A350P control.

2. Adjust the minimum output to zero again, and select the DA mode.

3. If the right most LED in the bar graph is on (Terminal V = 10 VDC, Terminal I = 20 mA), go to Step 3h. If the LED is not on, replace the A350P.

g. If the sensor voltage is above 1.1 VDC on A350PS-1C or above 1.6 VDC on A350PS-2C, adjust the setpoint to match the actual temperature (T_S). The output Terminal V should be less than 0.1 VDC, and all LEDs in the bar graph should be off.

Note: Some tolerance error is present between the setpoint scale and the setpoint knob pointer. Refer to the *Adjustments* section.

1. Make sure the A350P control is in RA mode.

2. Increase the setpoint in increments of 2F° (1C°).

3. As the setpoint is increased, the control's Terminal V output voltage should go from 0 to 10 VDC, the Terminal I output current should go from 0 to 20 mA, and the LEDs should turn on, one at a time from left to right.

4. If the LEDs do not turn on and if the outputs of terminals V and I do not change as described above, replace the control.

h. Readjust the A350P control to the desired control settings.

Repairs and Replacement

Do not make field repairs or perform calibration. A99B Temperature Sensors and replacement controls are available through the nearest Johnson Controls representative. (See Tables 5 and 6 for ordering information.)

Ordering Information

Table 5: System 350 Products

Item	Product Code Number	Description
A350P Proportional Plus Integral Temperature Controls	A350PS-1C	Range: -30 to 130°F (-35 to 55°C) Throttling Range: 2 to 30 F° (1 to 17C°) (Includes the A99BC-25C Temperature Sensor)
	A350PS-2C	Range: 90 to 250°F (30 to 120°C) Throttling Range: 2 to 30 F° (1 to 17C°) (Includes the A99BC-25C Temperature Sensor)
	A350PT-1C	Range: -30 to 130°F (-35 to 55°C) Throttling Range: 2 to 30F° (1 to 17C°) (Sensor not included)
Display Modules	D350AA-1C D350BA-1C	Digital Temperature Display Module (Fahrenheit Scale) Digital Temperature Display Module (Celsius Scale)
On/Off Stage Modules	S350AA-1C S350AB-1C	Fahrenheit Scale Celsius Scale
Slave Stage Module	S350CC-1C	Dual Scale (°F and °C)
Proportional Stage Module	S350PQ-1C	Dual Scale (°F and °C)
Power Module	Y350R-1C	120 or 240 VAC, 50/60 Hz Input, Rectified Class 2, 24 VAC Output

Table 6: System 350 Accessories

Item	Product Code Number	Description
Wall Mount Plate	TE-6001-4	Includes sensor mounting clip
Cover	T-4000-2644	For wall mount plate
Mounting Clip	A99-CLP-1	Surface mounting clip for the A99B Temperature Sensor
Duct Mounting	TE-6001-1	Duct-mounting hardware with handy box
Duct Mounting	TE-6001-11	Duct-mounting hardware without handy box
Conduit Adaptor	ADP11A-600R	1/2 in. snap-fit EMT conduit adaptor (box of 10)
Immersion Well	WEL11A-601R	For liquid sensing applications
Sun Shield	SHL10A-603R	For use with outside sensors in sunny locations
DIN Rail Sections	BKT287-1R BKT287-2R	12 in. (0.3 m) long 39-1/3 in. (1.0 m) long
DIN Rail End Clamp	PLT344-1R	Consists of two end clamps
Cables for Remote Mounting of D350 Display Module	WHA29A-600R* WHA29A-603R WHA29A-604R	3 ft (0.9 m) 25 ft (7.6 m) 50 ft (15.2 m)

*WHA29A-600R may be used to daisy chain S350 modules together.

Specifications

Product	A350P Proportional Plus Time Integral Temperature Control	
Supply Voltage	Y350R Power Module:	Input: 120/240 VAC 50/60 Hz
		Output: 24 VDC, unfiltered, 10 VA
	External Source:	24 VAC, 50/60 Hz, Class 2 (20-30 VAC)
	Note: Only one supply voltage source may be used.	
Power Consumption	3.2 VA maximum	
Ambient Temperature	Operating:	-30 to 150°F (-34 to 66°C)
	Shipping:	-40 to 185°F (-40 to 85°C)
Humidity (all modules)	0 to 95% RH non-condensing; maximum dew point 85°F (29°C)	
Setpoint Adjustment Range	A350PS-1C:	-30 to 130°F (-35 to 55°C)
	A350PS-2C:	90 to 250°F (30 to 120°C)
	A350PT-1C:	-30 to 130°F (-35 to 55°C)
Throttling Adjustment Range	2 to 30F° (1 to 17C°)	
Analog Outputs	0 to 10 VDC (550 ohm load minimum) and 0 to 20 mA (600 ohm load maximum)	
Minimum Output	Adjustable from 0 to 60% of the output	
Output Indication	A ten segment LED bar graph indicates percentage of output.	
Control Action	Direct or reverse action is jumper selectable.	
Integration Constant	Four selectable rates: fast, medium, slow, and off	
Sensor	Replaceable positive temperature coefficient sensor	
	Reference resistance 1035 ohms at 77°F (25°C)	
Material	Case and cover:	NEMA 1 high-impact thermoplastic
Agency Listing	UL Listed, CCN XAPX, File E27734	
	UL Listed for Canada, CCN XAPX7, File E27734	

The performance specifications are nominal and conform to acceptable industry standards. For application at conditions beyond these specifications, consult Johnson Controls Application Engineering at (414) 274-5535. Johnson Controls, Inc. shall not be liable for damages resulting from misapplication or misuse of its products.

Building Efficiency
507 E. Michigan Street, Milwaukee, WI 53202

® Johnson Controls and PENN are registered trademarks of Johnson Controls, Inc. in the United States of America and/or other countries. All other trademarks used herein are the property of their respective owners. © Copyright 2014 by Johnson Controls, Inc. All rights reserved.

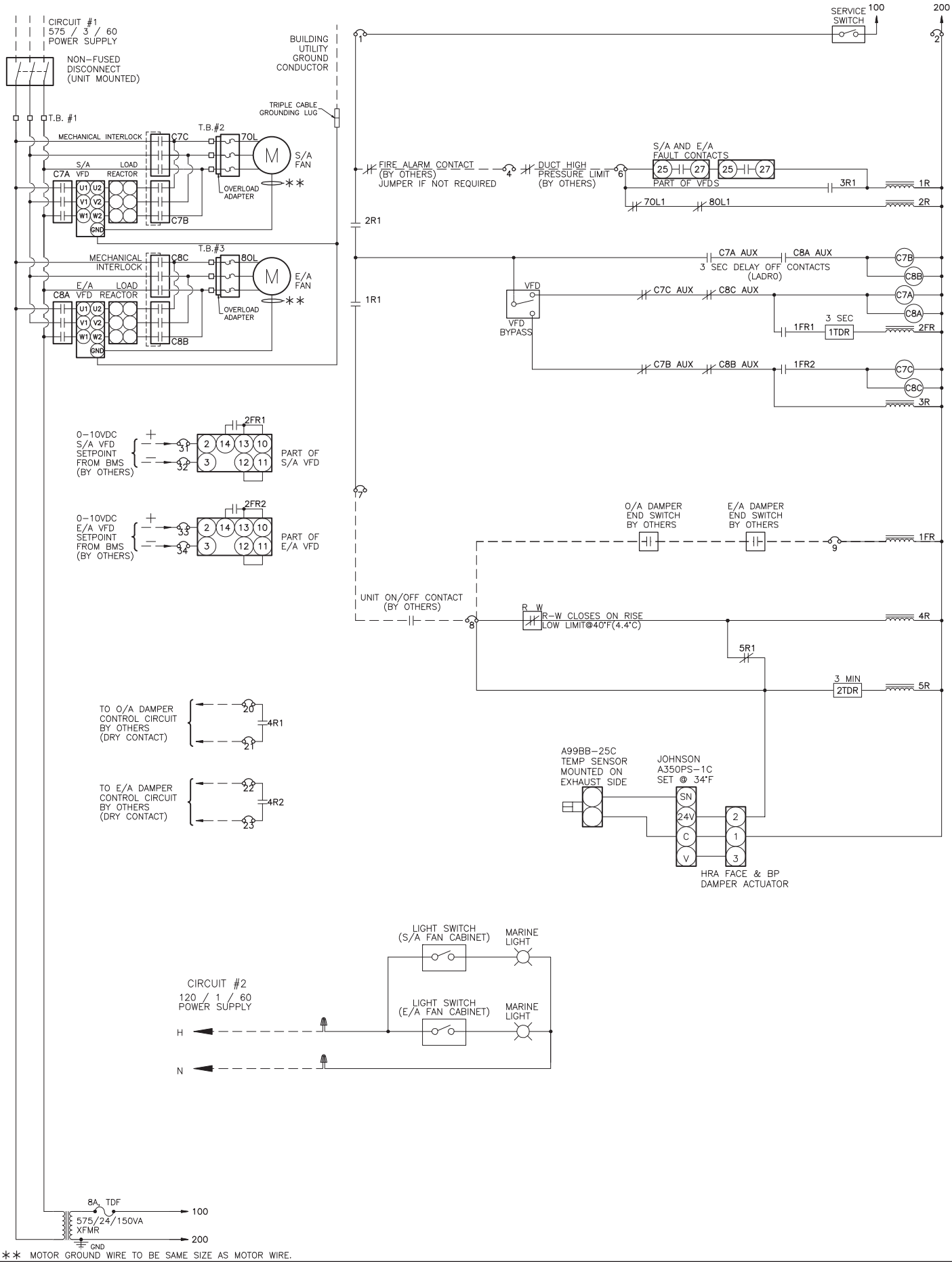

— — — — — DENOTES FIELD WIRING. REPLACEMENT WIRE MUST BE EQUIVALENT TO ORIGINAL WIRE SUPPLIED.

** MOTOR GROUND WIRE TO BE SAME SIZE AS MOTOR WIRE.

EngA® ENGINEERED AIR®

TAG: AHU-2

INTERNAL WIRING DIAGRAM
LM SERIES

REVISION: AUG 22, 2018	DRN.BY: HMC	DWG.NO: M19012E-01-1
DATE: JUN 14, 2018	CHKD.BY: KWL	

Mécanique Nordique
Plumbing
Heating
Ventillation
mecanique.nordique@hotmail.com

1255 Rue J.A.Bombardier
Lévis, Québec
G7A 2P4
Téléphone: 418-496-1109
Télécopieur: 418-496-3803

REVIEWED BY CONTRACTOR
Kudlik Construction Ltd.
NAME: Sandra Rousseau P.Eng
DATE: Aoû 28, 2018

IQALUIT WWTP UPGRADE

DRAWING FOR APPROVAL

Ingineer : NUNAMI STANTEC

DRAWING #: AD-019R3

Section		23 82 39
Article		PART 2
Plans		M-802
Application	:	COILS UH & CUH
Brand	:	Engineered Air
Model	:	Different Models
Revised #	:	1
Supplyer	:	Engineered Air

Pages incl. 13
Date : **2018-08-28**
By : **Mécanique Nordique Inc.**

STANTEC PROJECT #: 110126045
SUBMITTAL # AD-019R3

This review by Stantec is for general conformance with the design concept of Stantec's design of the:
☐ Architectural ☐ Structural ☑ Mechanical ☐ Electrical ☐ Other

Stantec

component(s) only and does not mean that Stantec has verified or approves the shop drawing(s). The Contractor remains solely responsible for the shop drawing(s) and this review by Stantec does not relieve the Contractor of the Contractor's responsibility for errors or omissions in the shop drawing(s) or for meeting all requirements of the contract documents. This review does not mean that Stantec approves the detailed design inherent in the shop drawing, responsibility for which shall remain with the Contractor submitting same, nor does this review mean that Stantec accepts any deviation of the shop drawing(s) from the contract documents. The Contractor is responsible for confirming all dimensions and correlating them at the job site, for all construction means, methods and techniques, and for coordination of construction work of all trades, including coordination of all shop drawings.

☑ REVIEWED
☐ REVIEWED, AS NOTED
☐ REVISE AND RESUBMIT
☐ NOT REVIEWED

DATE 2018-08-30
BY Brendan Zrum, P.Eng

DRAWING TRANSMITTAL SHEET

EngA® ENGINEERED AIR®

JOB NO. J203H

DATE June 19, 2018

☑ **MONTREAL SALES OFFICE**
1450 CUNARD STREET
LAVAL QC
H7S 2B7
(450) 662-1210

CANADIAN HEAD OFFICE
CALGARY AB

CANADIAN FACTORY
CALGARY AB
EDMONTON AB
NEWMARKET ON

OTHER CANADIAN SALES OFFICES
VANCOUVER, EDMONTON, CALGARY, SASKATOON, REGINA, WINNIPEG, LONDON, SUDBURY, TORONTO, HAMILTON, OTTAWA, HALIFAX, MONCTON

CONTRACTOR MECANIQUE NORDIQUE INC

ADDRESS 1255 RUE J.A. BOMBARDIER

LEVIS QC

G7A 2P4

ENGINEER STANTEC CONSULTING LTD WHITEHORSE

JOB NAME IQALUIT WWTP

☑ THIS ORDER IS SUBJECT TO APPROVAL. MANUFACTURING IS HELD PENDING RETURN OF ONE APPROVED COPY OF THESE FORMS TO THE INDICATED OFFICE.

☐ THIS ORDER IS NOT SUBJECT TO APPROVAL AND IS BEING MANUFACTURED ACCORDING TO THE ATTACHED FORMS.

COPIES ENCLOSED	DESCRIPTION
1	EngA Mechanical Drawing WF-1A-18"-18Ga
1	EngA Mechanical Drawing CUH-3 (ARR-4)
1	EngA Mechanical Drawing HUH-1
1	EngA Mechanical Drawing HUH-2
1	EngA Mechanical Drawing VUH1
1	EngA Mechanical Drawing RHC-1
1	EngA Mechanical Drawing PHC-1, HC-1.3
1	EngA Coil Certificate Data Sheet
1	Installation Operation and Maintenance Manual

PER MATHIEU HAMEL / BGP

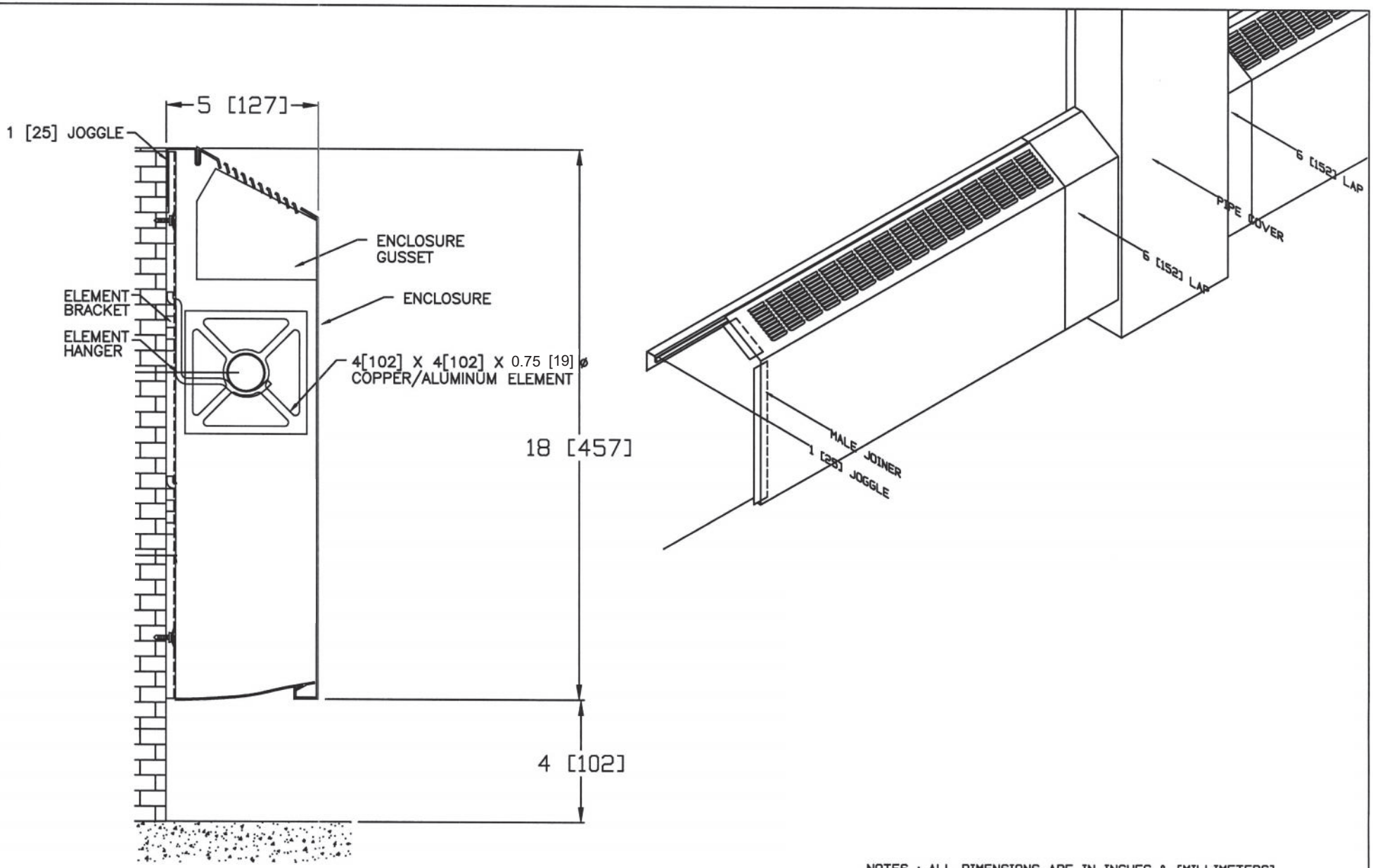

NOTES : ALL DIMENSIONS ARE IN INCHES & [MILLIMETERS]

CAPACITIES ARE BASED ON 3 FPS (0.9 M/S) WATER VELOCITY

WF-1A-18-18GA FINNED TUBE RADIATION (TYPE #1)

EngA ENGINEERED AIR

REVISIONS :			
DATE : 12/05/2017	DRN BY : E.L.	CHKD.BY:	DRWG NO : J203H-WF-1A-18

EngA ENGINEERED AIR

WF Series
Room Schedule

Order No: J-203H
Job Name: Iqaluit WWTP
Customer: Mecanique Nordique
Engineer: Stantec Consulting Ltd. (Whitehorse)

Enclosure Type #1
Revision number:
Entering Air Temp.: 65.0°F (18.3°C)
Fluid Type: Propylene-Glycol 50%
Average Fluid Temp.: 165.0°F(73.9°C)
Capacity: 1043 Btuh/Ft(1.00 kW/m)

Reference dwgs
M301

ELEMENT
3/4" x 4" x 4" CU/AL 50 fin/ft
19mm x 102mm x 102mm 164 fin/m
No of rows **1**

Support

ENCLOSURE: WF-1A-18"(457)-18 Ga
Gauge: 18 Ga
Height: 18"(457 mm)

Corners

Type on Drawing
WF-1

Room Number or Name	Floor Drawing	2.0' (610 mm)	2.5' (762 mm)	3.0' (914 mm)	3.5' (1067 mm)	4.0' (1218 mm)	4.5' (1372 mm)	5.0' (1524 mm)	5.5' (1676 mm)	6.0' (1829 mm)	6.5' (1981 mm)	7.0' (2134 mm)	7.5' (2286 mm)		Total Length of Element ft(m)	Element Hanger	Enclosure Bracket	Joggle 1"x10'	2.0' (610 mm)	2.5' (762 mm)	3.0' (914 mm)	3.5' (1067 mm)	4.0' (1218 mm)	4.5' (1372 mm)	5.0' (1524 mm)	5.5' (1676 mm)	6.0' (1829 mm)	Total Length of Enclosure ft(m)	6"(152) Lap	Left end cap	Right End Cap	Special Corner	Special Corner	Corner 90°	Corner 135°	Corner 225°	Corner 270°	Manual Dampers	Removable Access Panel 24"
1	lower		1												2.5 (0.8)	2	2	1				1						3.5 (1.1)		1	1								
Totals			1												2.5 (0.8)	2	2	1				1						3.5 (1.1)		1	1								

Remarks: Santex Finish

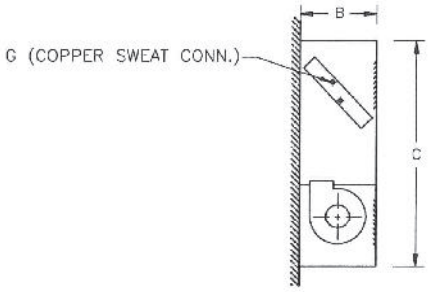

ARR–4 FULLY EXPOSED

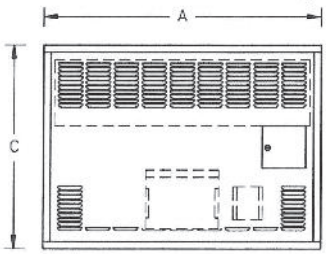

FRONT ELEVATION

GENERAL INFORMATION, DIMENSIONS AND WEIGHT

MODEL	ARR–	NOMINAL CFM/L/s	MOTOR HP/WATTS	MOTOR RPM	MOTOR AMPS	# OF FAN	A in/mm	B in/mm	C in/mm	G in/mm	WEIGHT LBS./KG.
CUH–3	4	300 142	1/25 30	1050	0.8	1	26 660	9 1/2 241	28 711	1/2 13	75 34

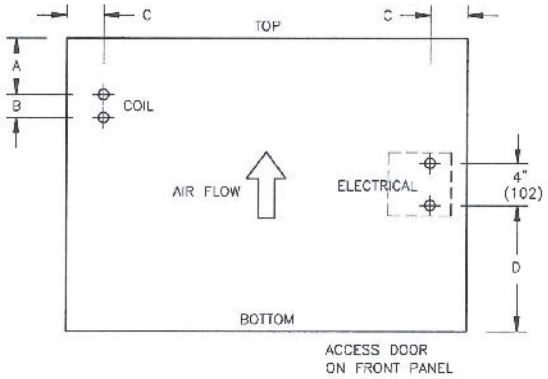

VERTICAL ARRANGEMENTS

ARR–4

MODEL	A in/mm	B in/mm	C in/mm	D in/mm
CUH– 3	5 3/8 137	2 3/16 56	3 1/2 89	12 305

NOTES : DRAWINGS REPRESENT VIEW OF BACK PANEL WHEN LOOKING AT FRONT OF UNIT.
KNOCKOUTS ARE DUAL TYPE, 7/8" (22mm) AND 1 1/8" (29mm)ø.

MOTOR VOLTAGE : 115/1/60
UNIT C/W : INSULATION
FILTER
UNIT MOUNTED 3 SPEED / OFF SWITCH

TAG : CUH1.1

CABINET UNIT HEATER

EngA® ENGINEERED AIR®

REVISIONS:			
DATE:	DRN.BY:	CHKD.BY:	DRWG.NO.:
JUNE 19/2018	BGP		J203H–CUH3–ARR4

EngA ENGINEERED AIR

Room Schedule

Cabinet, Horizontal and Vertical Unit Heater

Order No: J-203H
Job Name: Iqaluit WWTP
Customer: Mecanique Nordique
Engineer: Stantec Consulting Ltd. (Whitehorse)

Ref. Dwgs:
Revision no:

Unit Heater Type #1 **Enter Air Temp.:** 50.0°F (10.0°C) **Fluid Type: Propylene-Glycol 50%** **Enter Fluid Temp.:** 180.0°F(82.2°C) **Fluid Temp. Drop:** 30.1°F (16.7°C)

Room	Grid D7									
Type On Plan	CUH-1.1									
Quantity	1									
Model	CUH-3 (Arr-4)									
Capacity MBH (kW)	17.34 (5.1)									
Flow Rate GPM (l/s)	1.41 (0.09)									
Pressure Drop Ft (kPa)	2.4 (7.0)									
Air Flow CFM (l/s)	300 (141.6)									
Motor Rating (HP)	.0400									
Motor Voltage	115/1/60									
Motor Amps	0.6									
Motor Type	Std									
3 Speed / Off Switch - Unit Mtd	X									
Insulation	X									
Filter	X									

Remarks: Satin coat steel 16Ga Casing c/w Santex powder coat prime finish

July 30, 2018

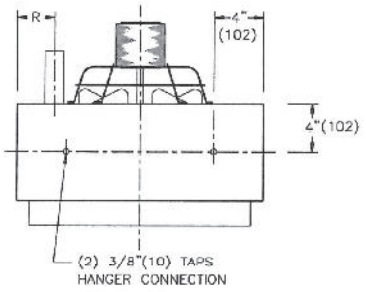

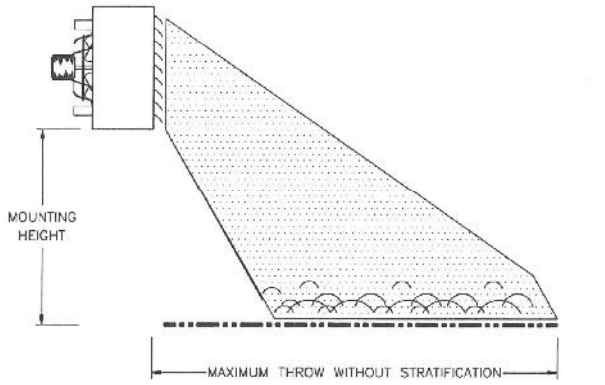

NOTE: THE FIGURES GIVEN FOR HORIZONTAL THROW IN THE TABLE BELOW INDICATE THE NECESSITY TO DIRECT AIR FLOW DOWNWARDS WITH THE HORIZONTAL LOUVRES WITH HIGH DISCHARGE AIR TEMPERATURES, WHILE COOLER DISCHARGE TEMPERATURES ALLOW A FLATTER, LONGER THROW WITHOUT STRATIFICATION.

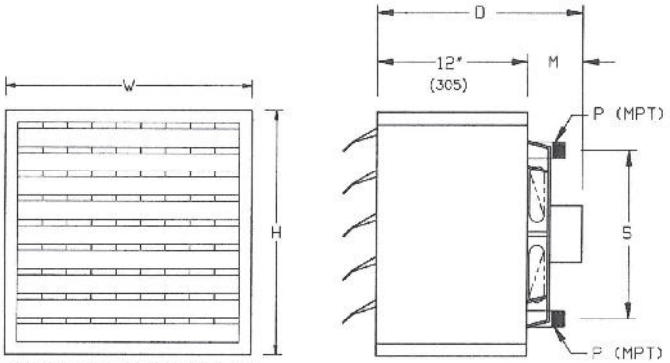

SHOWN WITH THE STANDARD 4 WAY ADJUSTABLE DIFFUSERS AND FAN GUARD

ROUGHING IN DIMENSIONS

IMPERIAL

MODEL	H (in)	W (in)	D (in)	M (in)	R (in)	S (in)	P (in)	NOISE LEVEL	WEIGHT (LBS)	MAX.MTG HEIGHT (FT)	HORIZONTAL THROW (FEET) LEAVING AIR TEMPERATURE			
											75°F	100°F	125°F	150°F
H1	19 1/2	21	18 1/2	6 1/2	3	13 7/8	1	LOW	88	9	27	24	22	17

METRIC

MODEL	H (mm)	W (mm)	D (mm)	M (mm)	R (mm)	S (mm)	P (mm)	NOISE LEVEL	WEIGHT (KG.)	MAX.MTG HEIGHT (M)	HORIZONTAL THROW(METERS) LEAVING AIR TEMPERATURE			
											24°C	38°C	52°C	66°C
H1	495	533	470	165	76	352	25	LOW	40	2.7	8.2	7.3	6.7	5.2

MOTOR VOLTAGE : 115/1/60

NOTE : DIMENSIONS ARE GIVEN IN INCHES AND MILLIMETERS

TAG(S): UH-1.4, UH-2.2

HORIZONTAL UNIT HEATER

EngA® ENGINEERED AIR®

REVISIONS:			
DATE: JUNE 19/2018	DRN.BY: BCP	CHKD.BY:	DRWG.NO.: J203H-HUH-1

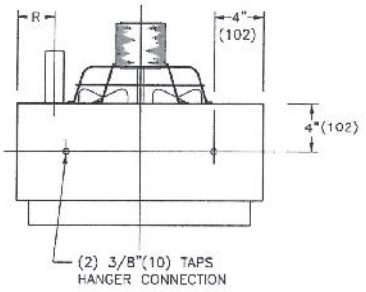

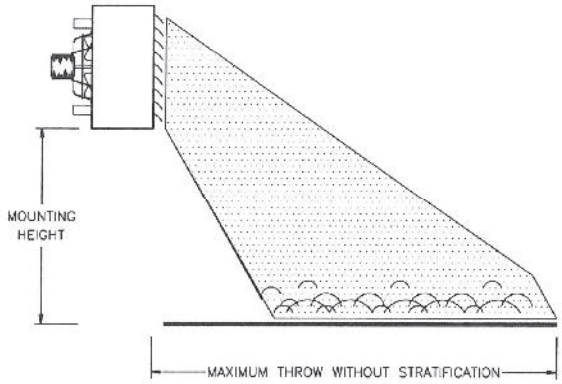

NOTE: THE FIGURES GIVEN FOR HORIZONTAL THROW IN THE TABLE BELOW INDICATE THE NECESSITY TO DIRECT AIR FLOW DOWNWARDS WITH THE HORIZONTAL LOUVRES WITH HIGH DISCHARGE AIR TEMPERATURES, WHILE COOLER DISCHARGE TEMPERATURES ALLOW A FLATTER, LONGER THROW WITHOUT STRATIFICATION.

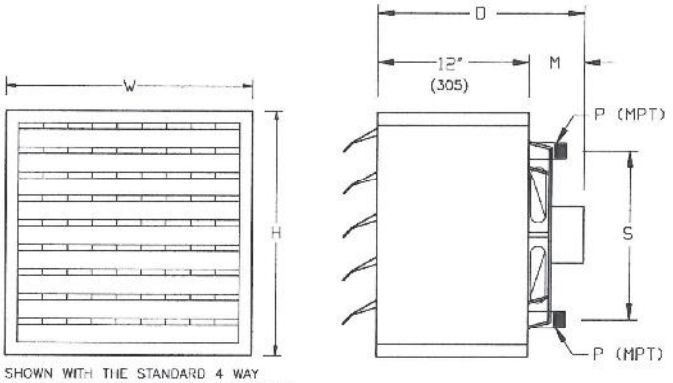

SHOWN WITH THE STANDARD 4 WAY ADJUSTABLE DIFFUSERS AND FAN GUARD

ROUGHING IN DIMENSIONS

IMPERIAL

MODEL	H (in)	W (in)	D (in)	M (in)	R (in)	S (in)	P (in)	NOISE LEVEL	WEIGHT (LBS)	MAX.MTG HEIGHT (FT)	HORIZONTAL THROW (FEET) LEAVING AIR TEMPERATURE			
											75°F	100°F	125°F	150°F
H2	22	24	18 1/2	6 1/2	3	16 3/8	1	LOW	94	9	35	30	27	21

METRIC

MODEL	H (mm)	W (mm)	D (mm)	M (mm)	R (mm)	S (mm)	P (mm)	NOISE LEVEL	WEIGHT (KG.)	MAX.MTG HEIGHT (M)	HORIZONTAL THROW(METERS) LEAVING AIR TEMPERATURE			
											24°C	38°C	52°C	66°C
H2	559	610	470	165	76	416	25	LOW	43	2.7	10.7	9.1	8.2	6.4

MOTOR VOLTAGE : 115/1/60

NOTE : DIMENSIONS ARE GIVEN IN INCHES AND MILLIMETERS

TAG(S): UH-1.6, UH-2.6

HORIZONTAL UNIT HEATER

EngA® ENGINEERED AIR®

REVISIONS:			
DATE:	DRN.BY:	CHKD.BY:	DRWG.NO.:
JUNE 19/2018	BGP		J203H-HUH-2

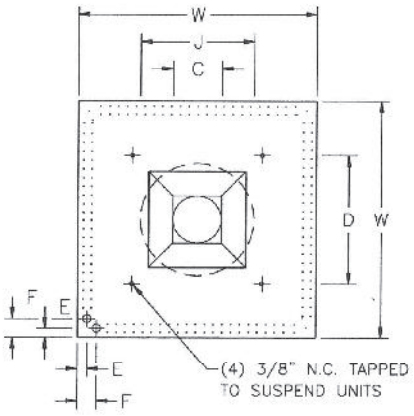

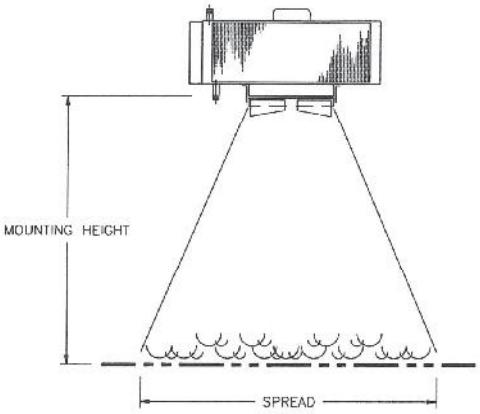

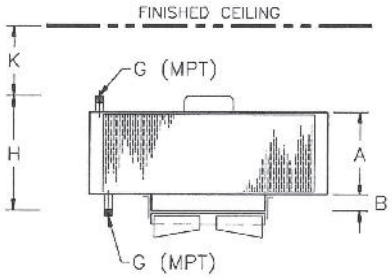

SHOWN WITH THE STANDARD
LOUVRE CONE DIFFUSER (LCD)

NOTE:
THE FIGURES GIVEN FOR SPREAD IN THE TABLE BELOW INDICATE THE NECESSITY TO UTILIZE THE STANDARD LOUVRE CONE DIFFUSER WHEN HIGH MOUNTING HEIGHTS ARE REQUIRED OR WHEN WARM AIR NEEDS TO BE DIRECTED TO A PARTICULAR AREA.

DIMENSION K IS MINIMUM RECOMMENDED CLEARANCE.

IMPERIAL

MODEL	H (in)	W (in)	A (in)	B (in)	C (in)	D (in)	E (in)	F (in)	G (in)	J (in)	K (in)	NOISE LEVEL	WEIGHT LBS.	MAXIMUM MTG. HEIGHT (FT) W/O LCD	MAXIMUM MTG. HEIGHT (FT) WITH LCD	SPREAD (FEET) W/O LCD	SPREAD (FEET) WITH LCD
V1	12	22	7 3/4	1 1/2	5	12	7/8	1 3/4	3/4	10 1/2	7	LOW	56	13	16	27	18

METRIC

MODEL	H (mm)	W (mm)	A (mm)	B (mm)	C (mm)	D (mm)	E (mm)	F (mm)	G (mm)	J (mm)	K (mm)	NOISE LEVEL	WEIGHT (KG.)	MAXIMUM MTG. HEIGHT (M) W/O LCD	MAXIMUM MTG. HEIGHT (M) WITH LCD	SPREAD (METERS) W/O LCD	SPREAD (METERS) WITH LCD
V1	305	559	197	38	127	305	22	44	19	267	178	LOW	25	4.0	4.9	8.2	5.5

MOTOR VOLTAGE : 115/1/60

NOTE : DIMENSIONS ARE GIVEN IN INCHES AND MILLIMETERS

TAG(S) : UH-1.7

VERTICAL UNIT HEATER

EngA ENGINEERED AIR

REVISIONS:			
DATE: JUNE 19/2018	DRN.BY: BCP	CHKD.BY:	DRWG.NO.: J203H-V1

EngA ENGINEERED AIR

Room Schedule

Cabinet, Horizontal and Vertical Unit Heater

Order No: J-203H
Job Name: Iqaluit WWTP
Customer: Mecanique Nordique
Engineer: Stantec Consulting Ltd. (Whitehorse)

Ref. Dwgs:
Revision no:

Unit Heater Type #1 **Enter Air Temp.:** 50.0°F (10.0°C) **Fluid Type: Propylene-Glycol 50%** **Enter Fluid Temp.:** 180.0°F(82.2°C) **Fluid Temp. Drop:** 30.1°F (16.7°C)

Room	Grid F.5-6	Grid E5-6	Elec Upper lvl	DAF Grid F5-6	Grid E4-5					
Type On Plan	UH-1.4	UH-1.6	UH-2.2	UH-2.6	UH-1.7					
Quantity	1	1	1	1	1					
Model	H-1	H-2	H-1	H-2	V-1					
Capacity MBH (kW)	24.78 (7.3)	30.75 (9.0)	24.78 (7.3)	30.75 (9.0)	32.59 (9.5)					
Flow Rate GPM (l/s)	2.01 (0.13)	2.5 (0.16)	2.01 (0.13)	2.5 (0.16)	2.64 (0.17)					
Pressure Drop Ft (kPa)	1.1 (3.2)	1 (2.9)	1.1 (3.2)	1 (2.9)	0.7 (2.1)					
Air Flow CFM (l/s)	550 (259.6)	620 (292.6)	550 (259.6)	620 (292.6)	710 (335.1)					
Motor Rating (HP)	.1700	.1700	.1700	.1700	.0500					
Motor Voltage	115/1/60	115/1/60	115/1/60	115/1/60	115/1/60					
Motor Amps	2	2	2	2	1.6					
Motor Type	Std	Std	Std	Std	Std					

Remarks: Satin coat steel 18Ga Casing c/w Santex powder coat prime finish

July 30, 2018

JOB IQALUIT WWTP DIV. NO. J203H

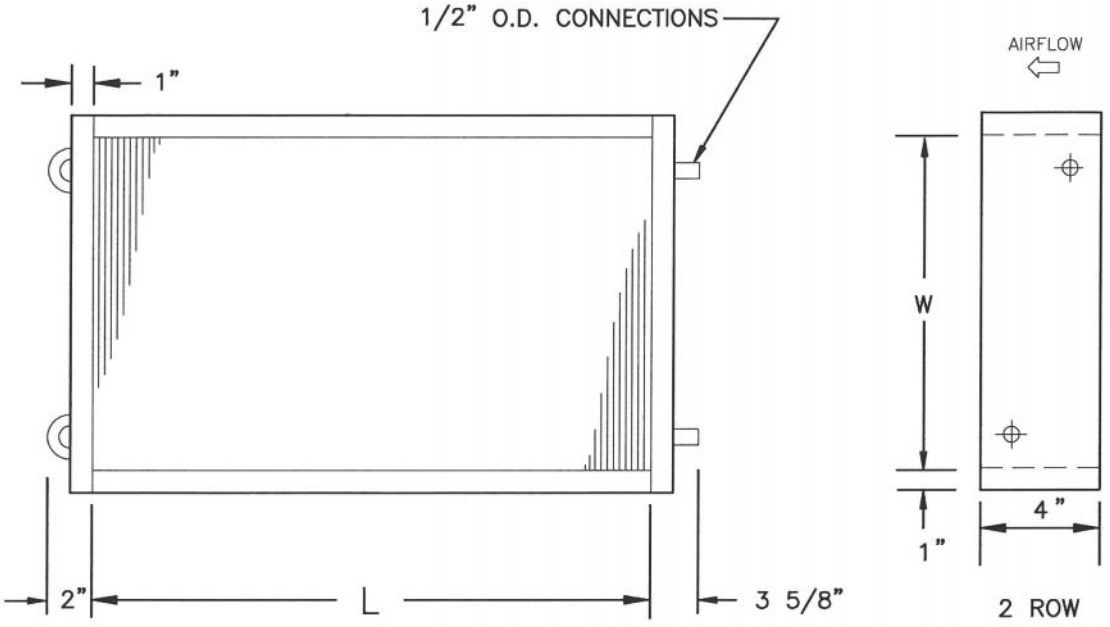

NOTE: DIMENSIONS ARE GIVEN IN INCHES [AND mm]

COIL TAG	QUANTITY	W	L	ROWS/FINS
RHC–1	1	7 1/2 [191]	8 [203]	2R / 8

EngA® ENGINEERED AIR®

SERPENTINE WATER COIL

REVISIONS

DATE:	DRN.BY:	CHKD.BY:	DRWG. No.
JUN 19/2018	BGP	LS	J203H–M1

PROJECT: IQALUIT WWTP JOB NO.: J203H

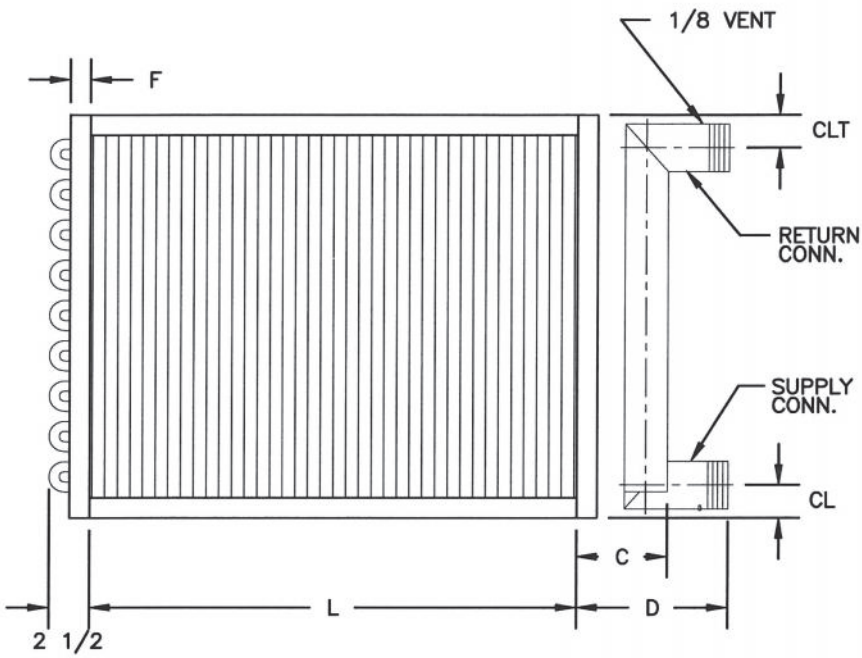

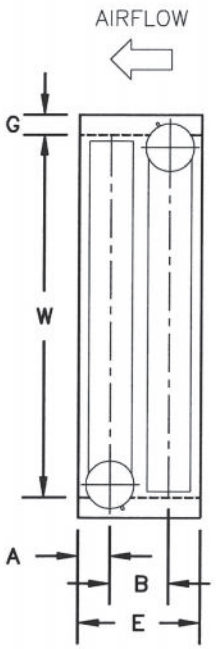

LEFT HAND

NOTE: DIMENSIONS ARE GIVEN IN INCHES [AND MM]

Tag	PHC–1	HC–1.3	
Quantity	1	1	
W	7 1/2 [190]	12 [304]	
L	8 [203]	15 [381]	
Rows/Fins	2R / 8	2R / 10	
Connections	3/4 [19] MPT	3/4 [19] MPT	
Hand	LEFT	LEFT	
CL	11/16 [17]	5/8 [16]	
CLT	1 1/16 [27]	1 [25]	
A	1 7/16 [37]	1 3/16 [30]	
B	2 [51]	2 1/4 [57]	
C	3 1/4 [83]	3 1/4 [83]	
D	6 3/4 [171]	6 3/4 [171]	
E	5 [127]	5 [127]	
F	1 [25]	1 [25]	
G	1 [25]	1 [25]	

EngA® ENGINEERED AIR®

WATER COIL– MITRE HEADERS

REVISIONS –

DATE:	DRN.BY:	CHKD.BY:	DRWG. No.
JUN 19/2018	BGP	LS	J203HM–2

EngA | ENGINEERED AIR

WATER / GLYCOL COIL PERFORMANCE DATA

Version 3.5.23E

Job Name:	Iqaluit WWTP	**Job No.:**	(J203H)
Customer:	Mecanique Nordique	**Tag No.:**	
Location:	Levis, QC	**Altitude:**	245 feet

	Case #1	Case #1	Case #1
Coil Tag	PHC-1	RHC-1	HC-1.3
Service	Heating	Heating	Heating
Tube Size	1/2" (13 mm) OD	1/2" (13 mm) OD	5/8" (16 mm) OD
Fin Surface	Corrugated- 0.0065"	Corrugated- 0.0065"	Corrugated- 0.0065"
Coil Size, in (H x L x R x FPI)	7.5 x 8 x 2 / 8	7.5 x 8 x 2 / 8	12 x 15 x 2 / 10
Coil Size, mm (H x L x R x FPI)	190 x 203.25 x 2 / 8	190 x 203.25 x 2 / 8	304 x 381 x 2 / 10
Pass-Circ-Blank	6 - 2 - 0	10 - 1 - 2	8 - 2 - 0
Header Size, in (mm)	0.75 (19)	-	0.75 (19)
Coil Handing	-	-	-
Header Conn.	Same	Same	Same
Total Capacity, MBH (kw)	9.7 (2.84)	6.23 (1.83)	17.33 (5.08)
Sensible Capacity, MBH (kw)	9.7 (2.84)	6.23 (1.83)	17.33 (5.08)
Air Flow Conditions	Standard CFM	Standard CFM	Standard CFM
Air Flow, CFM (l/s)	180 (85.0)	180 (85.0)	636 (300.2)
Air EDBT, °F (°C)	-41.8 (-41.0)	37.4 (3.0)	70.0 (21.1)
Air EWBT, °F (°C)	-	-	-
Air LDBT, °F (°C)	8.1 (-13.3)	69.5 (20.8)	95.2 (35.1)
Air LWBT, °F (°C)	-	-	-
Water Removal, lb/h (kg/h)	-	-	-
Leaving Coil Velocity, AFPM (m/s)	384 (1.95)	435 (2.21)	537 (2.73)
Coil Pressure Drop, in.wc. (pa)	0.09 (22.5)	0.11 (26.2)	0.22 (55.0)
Fluid	P-Glycol (50%)	P-Glycol (50%)	P-Glycol (50%)
Entering Temperature, °F (°C)	180.0 (82.2)	180.0 (82.2)	180.0 (82.2)
Leaving Temperature, °F (°C)	144.1 (62.3)	152.3 (66.8)	150.4 (65.8)
Flow Rate, GPM (l/s)	0.60 (0.038)	0.50 (0.032)	1.30 (0.082)
Fouling factor allowance, h.ft^2.°F/Btu	0.0001	0.0001	0.0001
Tube Velocity, FPS (m/s)	0.5 (0.15)	0.8 (0.26)	0.7 (0.22)
Pressure Drop, ft.wc. (kpa)	0.6 (1.7)	0.1 (0.4)	0.6 (1.9)
Drain Pan Length, in (mm)	-	-	-
No. of Mid. Pan	-	-	-
Notes	3,4,9	3,4	3,4

Notes:

[3] Coil is NOT certified by AHRI.

[4] Fluid inlet and outlet connections are located on the same end.

[9] Air entering temperature is below its freezing point.

Coil material: Copper tube and aluminium fin

1/2" copper tube have 0.016" wall thickness

5/8" copper tube have 0.018" wall thickness

Submitted By: BGP Date: 6/19/2018

Mécanique Nordique
Plumbing
Heating
Ventillation
mecanique.nordique@hotmail.com
1255 Rue J.A.Bombardier Lévis QC G7A 2P4
Tél : (418) 496-1109 Fax : (418) 496-3803

REVIEWED BY CONTRACTOR
Kudlik Construction Ltd.
NAME: Sandra Rousseau P.Eng
DATE: Jun 28, 2018

IQUALUIT WWTP UPGRADES

DRAWING FOR APPROVAL

ENGINEER: **NUNAMI STANTEC LIMITED**

DRAWING #: AD-020

This shop drawing stamp applies to the following shop drawings:
- PPP SC-100CC Water Hammer Arrestor
- SFI-100 flow indicator
- Watts LF25AUB-Z3 Pressure Reducing Valve
- Watts LFM115 Pressure Reducing Control Valve
- Watts LF009 Reduced Pressure Zone Assemblies
- Watts 957N Reduced Pressure Zone Assemblies
- Watts 909AGF Air gap

Section : 22 42 01
Article : 2.5 & 2.7
Plans : M603
Application : PLUMBING SPECIALTIES AND ACCESSORIES
Brand : PPP INC , WATTS ,
Model :
Revised # :
Supplyer : WOLSELEY

Date : **27/06/2018**

By : Martin Boucher

STANTEC PROJECT #: 110126045
SUBMITTAL # AD-020

This review by Stantec is for general conformance with the design concept of Stantec's design of the:
☐ Architectural ☐ Electrical
☐ Structural ☐ Other
☑ Mechanical

component(s) only and does not mean that Stantec has verified or approves the shop drawing(s). The Contractor remains solely responsible for the shop drawing(s) and this review by Stantec does not relieve the Contractor of the Contractor's responsibility for errors or omissions in the shop drawing(s) or for meeting all requirements of the contract documents. This review does not mean that Stantec approves the detailed design inherent in the shop drawing, responsibility for which shall remain with the Contractor submitting same, nor does this review mean that Stantec accepts any deviation of the shop drawing(s) from the contract documents. The Contractor is responsible for confirming all dimensions and correlating them at the job site, for all construction means, methods and techniques, and for coordination of construction work of all trades, including coordination of all shop drawings.

Stantec

☑ REVIEWED
☐ REVIEWED, AS NOTED
☐ REVISE AND RESUBMIT
☐ NOT REVIEWED

DATE 2018-07-04
BY Brendan Zrum, P.Eng

Precision Plumbing Products
"Specify with Confidence - Install with Pride"®

LEAD FREE

THREADED WATER HAMMER ARRESTORS

www.pppinc.net

SPEC 22 42 01 2.5

ONLY ONE MOVING PART!

WATER HAMMER ARRESTORS ARE SPECIFIED FOR COMMERCIAL, INDUSTRIAL AND RESIDENTIAL USES.

ON DRAWING M603
DHW & NPW SYSTEM

PPP WATER HAMMER ARRESTORS SPECIFIED FOR MANY INSTALLATIONS!



A maintenance-free installation is assured when using this type of arrestor...the only moving part is the free-moving piston furnished with "O"ring seals which have been tested for reliability in excess of normal operating ranges.

SC-500A - SC-2000F

FLUID HAMMER IN FLUID TRANSMISSION LINES – a definition.
Fluid Hammer is a series of hydraulic shock waves generated within the confines of a piping system due to the sudden stopping of fluid flow. This condition is caused by fast closing of positive valves incorporated within the system. The effect of fluid hammer is damaging if allowed to exist for any length of time and will result in broken pipes and damage to other components in the system.

U.S. Patent No. 3,633,627

40 Years of outstanding performance

LIMITED SBCCI PST&ESI
Low Lead UPC®
Complies with low lead law.
ASSE 1010
Made in the U.S.A. We do not export jobs.
ISO AMERICAN GLOBAL STANDARDS 14001 CERTIFIED-GREEN
ISO AMERICAN GLOBAL STANDARDS 9001 CERTIFIED

SPECIFICATIONS & INSTALLATIONS



A

B

INSTALLATION: May be installed in new or existing plumbing systems with a standard pipe tee.
MAINTENANCE: Maintenance free – the piston is the only moving part.
TEMPERATURE RANGE: -40º F to + 212º F (-4.4º C to + 100º C)
CONSTRUCTION: Barrel-fabricated of type "L" hard drawn copper.
Cap: Copper or free turning brass.
Piston: Machined of Composite Material
Threaded Adapter: Machined of C69300 Low Lead Brass
Seals: "O"rings: EPDM.
Seal Lubricant: Dow-Corning Silicone Compound #111, FDA listed for use in potable water systems.
Nickel Plated: For Salt Water Application.
OPERATING PRESSURE: Designed to operate on all domestic and commercial systems.
Normal operating pressure 0 to 80 PSIG. Max spike pressure 400 PSIG. System Pressures above 80 PSI consult factory.

SIZING INFORMATION

For equipment and fixtures not listed below, size in accordance with load values (WSFU) assigned the same.

Extract from: PDI WH201-06

FIXTURE	TYPE OF SUPPLY CONTROL	WEIGHT IN FIXTURE UNITS			
		Public		Private	
		C.W.	H.W.	C.W.	H.W
Water Closet	Flush Valve	8	-	5	-
Water Closet	Flush Tank	5	-	2.5	-
Pedestal Urinal	Flush Valve	4	-	-	-
Stall or Wall Urinal	Flush Valve	4	-	-	-
Lavatory	Faucet	1 1/2	1 1/2	1	1
Bathtub	Faucet	2	3	1 1/2	1 1/2
Shower Head	Mixing Valve	2	3	1	2
Bathroom Group	Flush Valve Closet	-	-	8	3
Bathroom Group	Flush Tank Closet	-	-	6	3
Separate Shower	Mixing Valve	-	-	1	2
Service Sink	Faucet	3	3	-	-
Laundry Tubs (1-3)	Faucet	-	-	3	3
Comb. Fixture	Faucet	-	-	3	3

PDI SIZING AND SELECTION TABLE

PIPE SIZE	FIXTURE UNITS	CROSS REF. PDI
1/2"	1-11	A
3/4"	12-32	B
1"	33-60	C
1 1/4"	61-113	D
1 1/2"	114-154	E
2'"	155-330	F

Extract from: PDI WH201

NO ACCESS PANEL REQUIRED (CONSULT LOCAL CODES)

DIMENSIONAL AND AIR LOADING DATA

PART NUMBER	A OAL	B NPT	NITROGEN PRELOAD PSI
SC-500A	6 1/4"	1/2" brass	60
SC-750B	7 1/4"	3/4" brass	60
SC-1000C	9 1/4"	1" brass	60
SC-1250D	9 1/2"	1" brass	60
SC-1500E	11 1/4"	1" brass	60
SC-2000F	12"	1" brass	60

PROJECT SUBMITTAL

Project: _____

Contractor: _____

Engineer: _____

Date Submitted: _____

Prepared By: _____

Precision Plumbing Products
Division of JL Industries, Inc.

802 SE 199th Avenue
Portland, Oregon 97233

T (503) 256-4010
F (503) 253-8165

www.pppinc.net

Complies with low lead law.

Made in the U.S.A. We do not export jobs.

TAG: SIGHT FLOW INDICATOR ON WATER SERVICE RECIRC 2" DRAWING M603

W. E. Anderson®

Series
SFI-100, SFI-300, SFI-350,
SFI-360, SFI-400, SFI-700

MIDWEST Sight Flow Indicators

Inexpensive Protection for Expensive Equipment and Systems



MODEL 100, 100MP



MODEL 300, 300MP



MODEL 360F



MODEL 400



MODEL 700

Patent No. 5,103,757

Midwest Sight Flow Indicators are manufactured of quality materials and safety tested to assure long, dependable service at economical prices. Available in window viewing style in the 100 and 300 Series and tube viewing style in the 400 and 700 Series with connection choices of female NPT, BSPP, or BSPT threaded and flanged. Series 700 has impeller and internal wipers for cleaning sight tube, which is perfect for fluids with suspended solids. Just rotate the glass tube and restore full 360° visibility without disrupting the flow.

Models

- 100 - Single window with impeller
- 300 - Double window with impeller
- 350 - Double window with no indicator
- 360 - Double window with flapper
- 400 - Tube type with no indicator
- 700 - Tube type with impeller and internal wipers to clean glass tube

Sight Flow Indicator Dimensions and Weight

Model Number	Body Size	Length	Depth	Height	Flange Diameter	Viewing Area Diameter	Weight lbs (kg)
100 Series	1/4, 3/8	3.000 (76)	1.813 (46)	2.125 (54)	-		1.1 (0.5)
	1/2, 3/4	4.000 (102)	2.250 (57)	2.563 (65)	-	-	1.5 (0.7)
	1, 1-1/4	4.375 (111)	2.563 (65)	2.625 (67)	-	-	2.7 (1.2)
	1-1/2, 2	5.688 (144)	3.250 (830)	3.625 (83)	-	-	5.5 (2.5)
300 Series	1/4, 3/8	3.063 (78)	2.250 (57)	2.125 (54)	-	-	1.7 (0.8)
	1/2, 3/4	4.063 (103)	2.750 (70)	2.563 (65)	-	-	2.6 (1.2)
	1, 1-1/4	4.375 (111)	3.125 (79)	2.563 (65)	-	-	3.0 (1.4)
	1-1/2, 2	5.500 (140)	3.688 (93)	4.063 (103)	-	-	7.0 (3.2)
700 Series	1/4, 3/8	2.750 (70)	-	1.500 (38)	-	-	0.9 (0.4)
	1/2, 3/4	3.688 (94)	-	2.250 (57)	-	-	2.4 (1.1)
	1, 1-1/4, 1-1/2	4.875 (124)	-	2.750 (70) (across flats)	-	-	5.1 (2.3)
400 Series	1/2	4.500 (144)	-		3.500 (89)	1.500 (38)	3.8 (1.7)
	3/4	5.125 (130)	-	-	3.875 (98)	1.750 (44)	4.8 (2.2)
	1	5.625 (143)	-	-	4.250 (108)	2.000 (51)	6.2 (2.8)
	1-1/4	5.750 (146)	-	-	4.625 (117)	2.000 (51)	7.6 (3.5)
	1-1/2	5.875 (149)	-		5.000 (127)	2.500 (64)	8.7 (4.0)
	2	6.125 (156)	-	-	6.000 (152)	3.000 (76)	13 (6.0)
	3	6.250 (159)	-	-	7.500 (191)	4.000 (102)	17 (7.7)
	4	6.250 (159)	-	-	9.00 (229)	5.000 (127)	25 (11.0)
400F Series	1	5.000 (127)	-	-	4.250 (108	2.000 (51)	7 (3.2)
	1-1/4	5.125 (130)	-	-	4.625 (117)	2.000 (51)	8 (3.6)
	1-1/2	5.250 (133)	-	-	5.000 (127)	2.500 (64)	12 (5.4)
	2	5.370 (137)	-	-	6.000 (152)	3.000 (76)	14 (6.4)
	3	5.750 (146)	-	-	7.500 (191)	4.000 (102)	23 (10.4)
	4	5.750 (146)	-	-	9.000 (229)	5.000 (127)	31 (14.1)
300F Series	1-1/2	6.375 (162)	-	-	5.000 (127)	2.313 (58)	12 95.5)
	2	6.500 (165)	-	-	6.000 (152)	2.313 (58)	16 (7.5)
	3	8.875 (225)	-	-	7.500 (191)	3.000 (76)	38 (17)
	4	10.250 (260)	-	-	9.000 (229)	4.000 (102)	56 (25)
	6	12.500 (318)	-	-	11.000 (279)	6.000 (152)	120 (55)

Dimensions are in inches (mm)

SFI-100 & SFI-300 SERIES
Window Style with Threaded Connections

SPECIFICATIONS
Service: Compatible gases and liquids.
Wetted Materials: Window: Tempered glass. Body: Bronze or 316 SS. Gasket: Buna-N, Fluoroelastomer, or PTFE. Indicator: ABS or 316 SS impeller (100 and 300), 304 SS or 316 SS Flapper (360).
Temperature Limit: 200°F (93°C).
Pressure Limit: 125 psig (8.62 bar), 150 psig (10.34 bar) on "MP" Models.
Connections: Threaded.

Example	SFI	300	SS	2	G2	SFI-300SS-2-G2 Sight Flow Indicator; double window, temper glass, Fluoroelastomer gaskets, 316SS body, ABS impeller, 2 inch female NPT connections.
Model Designator	SFI					Sight flow indicator, tempered glass standard, Buna-N gaskets standard, female NPT connections standard.
Body Style		100 300 350 360				Single window, bronze body, ABS Impeller Double window, bronze body, ABS Impeller Double window, bronze body, no moving indicator Double window, bronze body, 304SS flapper
Body Options			SS MP			316SS body option for 300, 350, 360 150 psig maximum pressure option, includes Fluoroelastomer gaskets
Body Size				1/4 3/8 1/2 3/4 1 1-1/4 1-1/2 2		1/4 inch connection size 3/8 inch connection size 1/2 inch connection size 3/4 inch connection size 1 inch connection size 1-1/4 inch connection size 1-1/2 inch connection size 2 inch connection size
Options					W2 G1 G2 S2 S3 I1 I2 I3 F1 BSPT BSPP	Plexiglass window PTFE gasket Fluoroelastomer gasket 316SS Shaft (Not on 350 Model) Monel Shaft (Not on 350 Model) ABS impeller with bronze bushing (Not on 350, 360) 316SS impeller (Not on 350, 360) No impeller (100 only) 316SS Flapper (360 only) BSPT threads BSPP threads

(Maximum flow on impeller models: 5FPS with liquids, 5000 FPM with gases)

SFI-700 SERIES
Tube Style with Threaded Connections

SPECIFICATIONS
Service: Compatible gases and liquids.
Wetted Materials: Tube: Tempered Borosilicate. Body: Brass or 316 SS. Gasket: Fluoroelastomer. Indicator: Acetal.
Temperature Limit: 212°F (100°C).
Pressure Limit: 230 psig (15.86 bar).
Connections: Threaded.

Example	SFI	700SS	1-1/2		SFI-700SS-1-1/2 Sight Flow Indicator; tube type with 8 blade Acetal impeller and integral wipers to clean tube interior, tempered borosilicate tube, Fluoroelastomer gaskets, 316SS body, 1-1/2 inch female NPT connections
Model Designator	SFI				Sight flow indicator, tube type with 8 blade Acetal impeller and integral wipers to clean tube interior, tempered borosilicate tube, Fluoroelastomer gaskets
Body Style		700 700SS			Brass body 316SS body
Body Size			1/4 3/8 1/2 3/4 1 1-1/4 1-1/2		1/4 inch female NPT connection size 3/8 inch female NPT connection size 1/2 inch female NPT connection size 3/4 inch female NPT connection size 1 inch female NPT connection size 1-1/4 inch female NPT connection size 1-1/2 inch female NPT connection size
Options				BSPT BSPP	BSPT threads BSPP threads

SFI-300F SERIES
Window Style with Flanged Connections

SPECIFICATIONS
Service: Compatible gases and liquids.
Wetted Materials: Window: Tempered glass. Body: Carbon Steel or 316 SS. Gasket: Buna-N, Fluoroelastomer, or PTFE. Indicator: 316 SS Flapper (360).
Temperature Limit: 200°F (93°C).
Pressure Limit: 150 psig (10.34 bar).
Connections: Flanged.

Example	SFI	360FSS	1-1/2	G1	SFI-360FSS-1-1/2-G1 Sight Flow Indicator; double window, tempered glass, PTFE gasket, 316SS body, 304SS flapper, 1-1/2 inch raised face flange connections
Model Designator	SFI				Sight flow indicator, double window, tempered glass, Buna-N gaskets standard, raised face flange connections
Body Style		350FCS 350FSS 360FCS 360FSS			Carbon steel body, no moving indicator 316SS body, no moving 316SS indicator Carbon steel body, 316SS flapper 316SS body, 316SS flapper
Body Size			1-1/2 2 3 4 6		1-1/2 inch raised face flange connection size 2 inch raised face flange connection size 3 inch raised face flange connection size 4 inch raised face flange connection size 6 inch raised face flange connection size
Options				G1 G2	PTFE gasket Fluoroelastomer gasket

SFI-400 SERIES
Tube Style with Threaded or Flanged Connections

SPECIFICATIONS
Service: Compatible gases and liquids.
Wetted Materials: Tube: Borosilicate. Body: Cast Iron or 316 SS. Gasket: PTFE.
Temperature Limit: 200°F (93°C).
Pressure Limit: 50 psig (3.45 bar).
Connections: Threaded or Flanged.

Example	SFI	400	1-1/2	SFI-400SS-1-1/2 Sight Flow Indicator; tube type, borosilicate tube, PTFE gaskets, 316SS body, 1-1/2 inch female NPT connections
Model Designator	SFI			Sight flow indicator, tube type, borosilicate tube, PTFE gaskets
Body Style		400CI 400SS 400F		Female NPT connections, cast iron body (only for 1 through 2 inch sizes) Female NPT connections, 316SS body Raised face flange connection, 316SS body (only for 1 inch and up sizes)
Body Size			1/2 3/4 1 1-1/4 1-1/2 2 3 4	1/2 inch connection size 3/4 inch connection size 1 inch connection size 1-1/4 inch connection size 1-1/2 inch connection size 2 inch connection size 3 inch connection size 4 inch connection size

(Best for use in vertical pipelines where there are no mechanical strains)

TAG: SECTION 22 42 01 PRESSURE REDUCING VALVE

ES-LF25AUB

For Residential and Commercial Applications

Job Name WASTE WATER TREAMENT

Job Location IQUALUIT NUNAVUT

Engineer NUNAMI STANTEC

Approval _____

Contractor _____

Approval _____

Contractor's P.O. No. _____

Representative _____

LEAD FREE*

Series LF25AUB-Z3

Water Pressure Reducing Valves**

Sizes: ½" – 2" (15 – 50mm)

Series LF25AUB-Z3 Water Pressure Reducing Valves are designed to reduce incoming water pressure to a sensible level to protect plumbing system components and reduce water consumption. This series is suitable for water supply pressures up to 300psi (20.7 bar) and may be adjusted from 25 – 75psi (172 – 517 kPa). The LF25AUB-Z3 features Lead Free* construction to comply with Lead Free* installation requirements. The standard setting is 50psi (345 kPa). All parts are quickly and easily serviceable without removing the valve from the line. The standard bypass feature permits the flow of water back through the valve into the main when pressures, due to thermal expansion on the outlet side of the valve, exceed the pressure in the main supply.

Features

- Standard construction includes Z3 sealed spring cage and stainless steel corrosion resistant adjusting & cage screws for accessible outdoor or pit installations
- Union inlet connection
- Integral stainless steel strainer
- Replaceable seat module
- Lead Free* cast copper silicon alloy construction
- Serviceable in line
- Bypass feature controls thermal expansion pressure***
- High temperature resistant reinforced diaphragm for hot water

Models

LF25AUB-Z3	NPT threaded female union inlet x NPT female outlet
LF25AUB-S-Z3	Solder union inlet x NPT female outlet
LF25AUB-DU-Z3	Double Union – NPT threaded union female inlet and outlet
LF25AUB-S-DU-Z3	Double Union – Solder union inlet and outlet
LF25AUB-DU-THDxPEX-Z3	Double Union – NPT threaded female inlet and PEX union outlet
LF25AUB-DU-LF-Z3	Double union body less fittings (¾", 1", 1¼")
LF25AUB-QC-Z3	Single Union – Quick-Connect union inlet (½", ¾", 1")
LF25AUB-DU-QC-Z3	Double Union – Quick-Connect inlet and outlet (½", ¾", 1")

Specifications

A Water Pressure Reducing Valve with integral strainer shall be installed in the water service pipe near its entrance to the building where supply main pressure exceeds 60psi (413 kPa) to reduce it to 50psi (345 kPa) or lower. The water pressure reducing valve shall be constructed using Lead Free* materials. Lead Free* regulators shall comply with state codes and standards, where applicable, requiring reduced lead content. The valve shall feature a Lead Free* cast copper silicon alloy suitable for water supply pressures up to 300psi (20.7 bar). Provision shall be made to permit the bypass flow of water back through the valve into the main when pressures, due to thermal expansion on the outlet side of the valve, exceed the pressure in the main supply. Water Pressure Reducing Valve with built-in bypass check valves will be acceptable. Approved valve shall be listed to ASSE 1003 and IAPMO and certified to CSA B356. Valve shall be a Watts Series LF25AUB-Z3.

LF25AUB-Z3



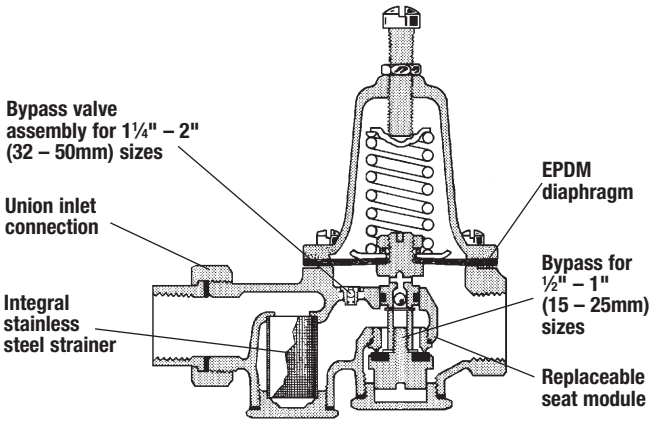

DOMESTIC COLD WATER

*The wetted surface of this product contacted by consumable water contains less than 0.25% of lead by weight.

**A water saving test program concluded that reducing the supply pressure from 80-50psi (551-345 kPa) resulted in a water savings of 30%.

***The bypass feature will not prevent the pressure relief valve from opening on the hot water supply system with pressure above 150psi (10.3 bar).

Watts product specifications in U.S. customary units and metric are approximate and are provided for reference only. For precise measurements, please contact Watts Technical Service. Watts reserves the right to change or modify product design, construction, specifications, or materials without prior notice and without incurring any obligation to make such changes and modifications on Watts products previously or subsequently sold.

WATTS®

TAG: SECTION 22 42 01 PRESSURE REDUCING VALVE

Materials

Body:	Lead Free* copper silicon alloy
Seat:	½"–1" (15–25mm) Replaceable engineered polymer (10% glass filled Noryl®) 1¼"–2" (32–50mm) Replaceable stainless steel
Integral Strainer:	Stainless steel
Diaphragm:	Reinforced EPDM with PTFE wetted surface
Valve Disc:	EPDM

Pressure – Temperature

Temperature Range: 33°F – 160°F (0.5°C – 71°C)
Maximum Working Pressure: 300psi (20.7 bar)
Adjustable Reduced Pressure Range: 25–75psi (172 – 517 kPa)
Standard Reduced Pressure Setting: 50psi (345 kPa)

Options

Add Suffix

G	Gauge tapping, ⅛" (3mm)
GG	Gauge tapping and 160psi (11 bar) gauge
HP	High pressure range 75–125psi (5.2 – 8.6 bar) †
LP	Low pressure range 10–35psi (69 – 241 kPa) †
Z7	400psi (27.6 bar) initial pressure, ½" (20mm) models only

† Not available on G or GG models

Noryl® is a registered trademark of SABIC Innovative Plastics™

Standards

Meets requirements of ASSE Standard 1003: ANSI A112.26.2: CSA Standard B356; Southern Standard Plumbing Code and listed by IAPMO.
Military Standard MIL-V-18146B Type I.

Capacity

Sizes: ½", ¾", 1", 1¼", 1½", 2" (15, 20, 25, 32, 40, 50mm)

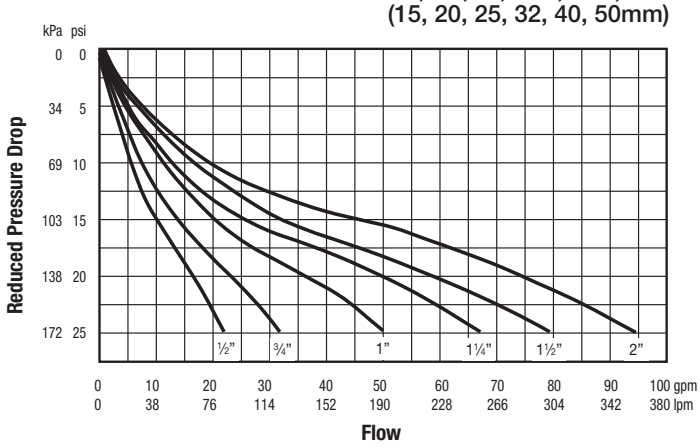

DOMESTIC COLD WATER 2"

Dimensions — Weights

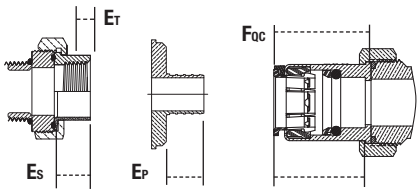

A - LF25AUB-Z3
A1 - LF25AUB-S-Z3
A2 - LF25AUB-DU-LF-Z3
B - LF25AUB-DU-Z3
B1 - LF25AUB-S-DU-Z3
B2 - LF25AUB-DU-THDxPEX-Z3
ET - NPT Engagement for tight joint
ES - Female sweat socket depth
EP - PEX end connection
FQC - Quick-Connect union

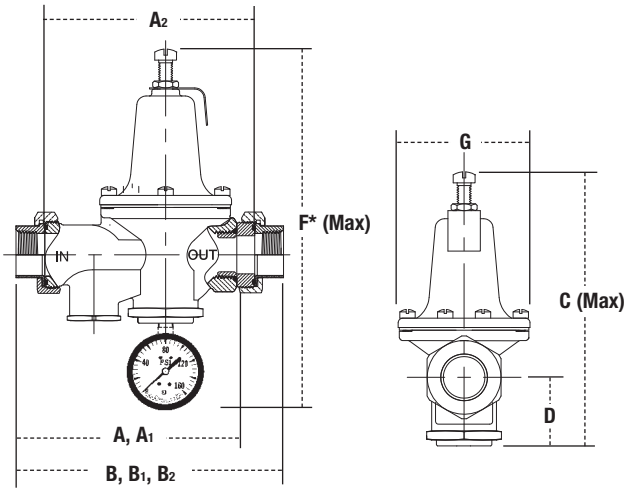

SIZE (DN)		DIMENSIONS													
		A		A1		A2		B		B1		B2		C	
in.	mm	in.	mm	in.	mm	in.	mm	in.	mm	in.	mm	in.	mm	in.	mm
½	15	5⅜	137	5⁵⁄₁₆	135	5³⁄₁₆	132	6⁷⁄₁₆	164	6⅜	162	–	–	7	178
¾	20	5⁵⁄₁₆	135	5½	140	5¼	133	6½	165	6⅞	175	6¾	171	7	178
1	25	6	152	6¼	159	5⅞	149	7⅜	187	7¹³⁄₁₆	198	7¹¹⁄₁₆	195	8	203
1¼	32	8¾	222	8¹⁵⁄₁₆	227	8¼	210	10¾	273	11	279	–	–	9	229
1½	40	8¾	222	9	229	8¼	210	10¾	273	11³⁄₁₆	284	–	–	9½	241
2	50	9¼	235	10	254	8¾	222	11⁵⁄₁₆	287	12¹¹⁄₁₆	322	–	–	11¼	286

SIZE (DN)		DIMENSIONS												WEIGHT	
		D		F Δ		G		ET		ES		EP		FQC			
in.	mm	in.	mm	in.	mm	in.	mm	in.	mm	in.	mm	in.	mm	in.	mm	lbs.	kgs.
½	15	1½	38	9⁷⁄₁₆	240	3⅛	79	½	13	½	13	–	–	1½	38	3.5	1.6
¾	20	1½	38	9⁷⁄₁₆	240	3⅛	79	½	13	¾	19	⅝	16	1¹¹⁄₁₆	42	3.5	1.6
1	25	1¾	44	10⁷⁄₁₆	266	3⅝	92	⅝	16	¹⁵⁄₁₆	23	¹³⁄₁₆	21	1¾	45	6.5	3.0
1¼	32	2⅛	54	11⁷⁄₁₆	291	3⅝	92	⅝	16	1	25	–	–	–	–	10	4.5
1½	40	2⅜	60	11¹⁵⁄₁₆	304	4¹⁄₁₆	103	⅝	16	1¹⁄₁₆	28	–	–	–	–	10	4.5
2	50	3¼	83	13¹¹⁄₁₆	348	4¾	121	⅝	16	1⁵⁄₁₆	34	–	–	–	–	15	6.8

Δ Dimension includes optional gauge

© 2014 Watts

TAG: SECTION 22 42 01 2.6 PRESSURE REDUCING VALVE

Mustang Series

LEAD FREE*

LFM115 (Globe) LFM1115 (Angle)

Pressure Reducing Control Valve

NON-POTABLE WATER 3"

Schematic

- Throttles to reduce high upstream pressure to constant lower downstream pressure
- Reducing setpoint is adjustable

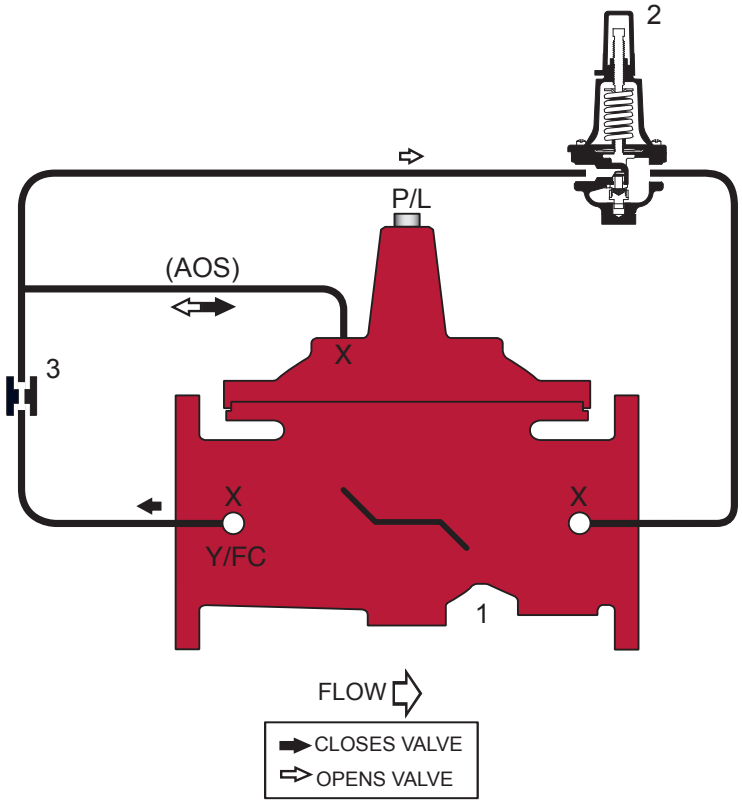

Standard Components

1 – Main Valve (Single Chamber)
2 – Pressure Reducing Control
3 – Fixed Orifice

Options & Accessories

- ○ X – Isolation Cocks *(2)*
- ○ FC – Flo-Clean Strainer *(1)*
- ○ Y – Y-Strainer (Replaces Flo-Clean) *(2)*
- ○ ACS – Adjustable Closing Speed *(3)* (Replaces Fixed Orifice)
- ○ AOS – Adjustable Opening Speed *(1)*
- ○ P – Position Indicator *(3)*
- ○ L – Limit Switch *(3)*

(1) Standard 3" & Smaller
(2) Standard 4" & Larger
(3) Optional All Sizes

Operations

The Watts ACV Pressure Reducing Control Valve is designed to automatically reduce a fluctuating higher upstream pressure to a constant lower downstream pressure regardless of varying flow rates. It is controlled by a normally open, pressure reducing pilot designed to: 1) Open (allowing fluid out of the main valve cover chamber) when downstream pressure is below the adjustable setpoint, and 2) Close (allowing fluid to fill the main valve cover chamber) when downstream pressure is above the adjustable setpoint. A decrease in downstream pressure causes the valve to modulate toward an open position, raising downstream pressure. An increase in downstream pressure causes the valve to modulate toward a closed position, lowering downstream pressure.

***The wetted surface of this product contacted by consumable water contains less than 0.25% of lead by weight.**

Watts product specifications in U.S. customary units and metric are approximate and are provided for reference only. For precise measurements, please contact Watts Technical Service. Watts reserves the right to change or modify product design, construction, specifications, or materials without prior notice and without incurring any obligation to make such changes and modifications on Watts products previously or subsequently sold.

WATTS®

MUSTANG SERIES

LFM115 (Globe)
LFM1115 (Angle)

Materials

Body & Cover:	Ductile Iron ASTM A536
Coating:	NSF Listed Fusion Bonded Epoxy Lined and Coated
Trim:	316 Stainless Steel
Elastomers:	Buna-N (standard) EPDM Viton
Stem, Nut & Spring:	Stainless Steel

Globe

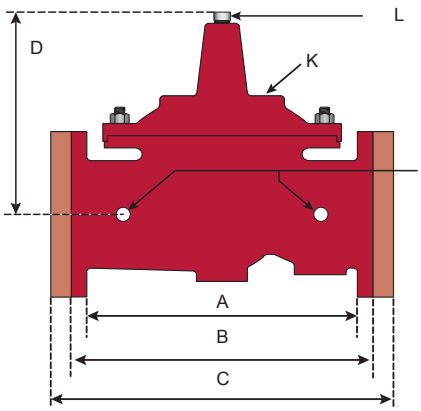

Angle

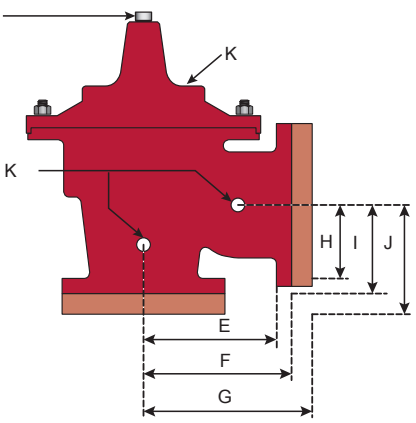

Operating Pressure

Threaded = 400 psi
150 Flanged = 250 psi
300 Flanged = 400 psi

Operating Temperature

Buna-N: 160 °F Maximum
EPDM: 300 °F Maximum
Viton: 250 °F Maximum

Pilot System

Reducing Control
30-300 psi (Standard)
0-30 psi (Optional)

Tubing & Fittings

Copper / Brass (Standard)
Stainless Steel (Optional)

Dimensions

	A	B	C	D	E	F	G	H	I	J	K	L	
VALVE SIZE	GLOBE THRD.	GLOBE 150#	GLOBE 300#	COVER TO CENTER	ANGLE THRD.	ANGLE 150#	ANGLE 300#	ANGLE THRD.	ANGLE 150#	ANGLE 300#	PORT SIZE	PORT SIZE	SHIPPING WEIGHTS*
1-1/4	7-1/4	-	-	5-1/2	3-1/4	-	-	1-7/8	-	-	3/8	1/4	20
1-1/2	7-1/4	8-1/2	9	5-1/2	3-1/4	4	4-1/4	1-7/8	4	4-1/4	3/8	1/4	25
2	9-3/8	9-3/8	10	6-1/2	4-3/4	4-3/4	5	3-1/4	3-1/4	3-1/2	3/8	1/2	40
2-1/2	11	11	11-5/8	7-1/2	5-1/2	5-1/2	5-7/8	4	4	4-5/16	1/2	1/2	65
3	12-1/2	12	13-1/4	8-1/4	6-1/4	6	6-3/8	4-1/2	4	4-3/8	1/2	1/2	95
4	-	15	15-5/8	10-5/8	-	7-1/2	7-7/8	-	5	5-5/16	3/4	3/4	190
6	-	20	21	13-3/8	-	10	10-1/2	-	6	6-1/2	3/4	3/4	320
8	-	25-3/8	26-3/8	16	-	12-3/4	13-1/4	-	8	8-1/2	1	1	650
10	-	29-3/4	31-1/8	17-1/8	-	14-7/8	15-9/16	-	8-5/8	9-5/16	1	1	940
12	-	34	35-1/2	20-7/8	-	17	17-3/4	-	13-3/4	14-1/2	1	1-1/4	1500
14	-	39	40-1/2	24-1/4	-	19-1/2	20-1/4	-	14-7/8	15-5/8	1	1-1/2	1675
16	-	41-3/8	43-1/2	25	-	20-13/16	21-5/8	-	15-11/16	16-1/2	1	2	3100

**Estimated in lbs.*

Valve Cover Chamber Capacity

Valve Size (in)	1-1/4	1-1/2	2	2-1/2	3	4	6	8	10	12	14	16
fl.oz.	4	4	4	10	10	22	70	-	-	-	-	-
U.S. Gal	-	-	-	-	-	-	-	1-1/4	2-1/2	4	6-1/2	9-1/2

Valve Travel

Valve Size (in)	1-1/4	1-1/2	2	2-1/2	3	4	6	8	10	12	14	16
Travel (in)	3/8	3/8	1/2	5/8	3/4	1	1-1/2	2	2-1/2	3	3-1/2	4

Sizing

Size (in)	1-1/4	1-1/2	2	2-1/2	3	4	6	8	10	12	14	16
Maximum Continuous (GPM)	95	130	210	300	485	800	1850	3100	5000	7000	8500	11100
Maximum Intermittent (GPM)	119	161	265	390	590	1000	2300	4000	6250	8900	10800	14100
Minimum Continuous (GPM)												

Maximum continuous flow based on velocity of 20 ft. per second.
Maximum intermittent flow based on velocity of 25 ft. per second.
Minimum continuous flow based on velocity of 1 ft. per second.

NOTE: The above chart is a suggested guide. Inlet pressure, outlet pressure, minumum, normal and maximum flow rates should be considered for specific valve sizing. Contact Watts ACV for details.

Cavitation Chart

After selecting the valve size, locate inlet and outlet pressures on this chart. If the intersection point falls in the shaded area, cavitation can occur. Operation of valves continually in the cavitation zone should be avoided. Consult Watts ACV for alternatives.

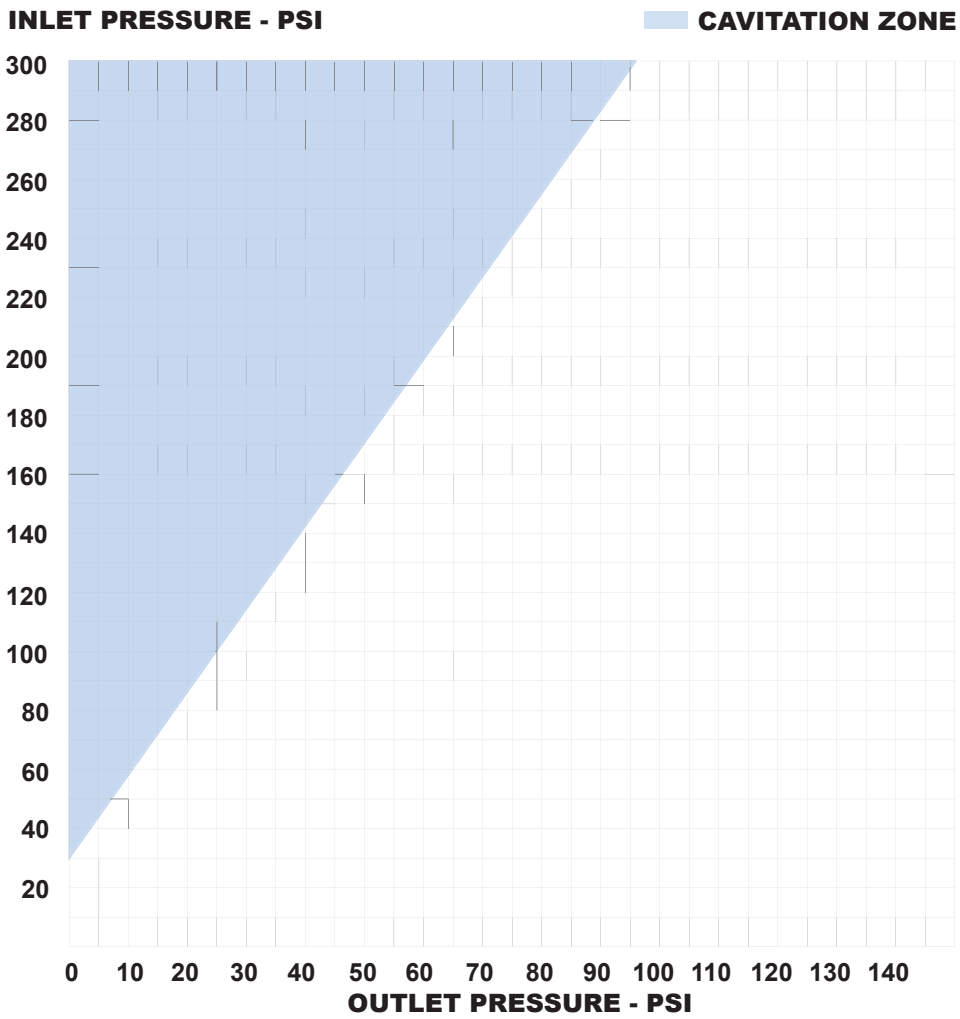

Cross-Sectional Detail

Main Valve

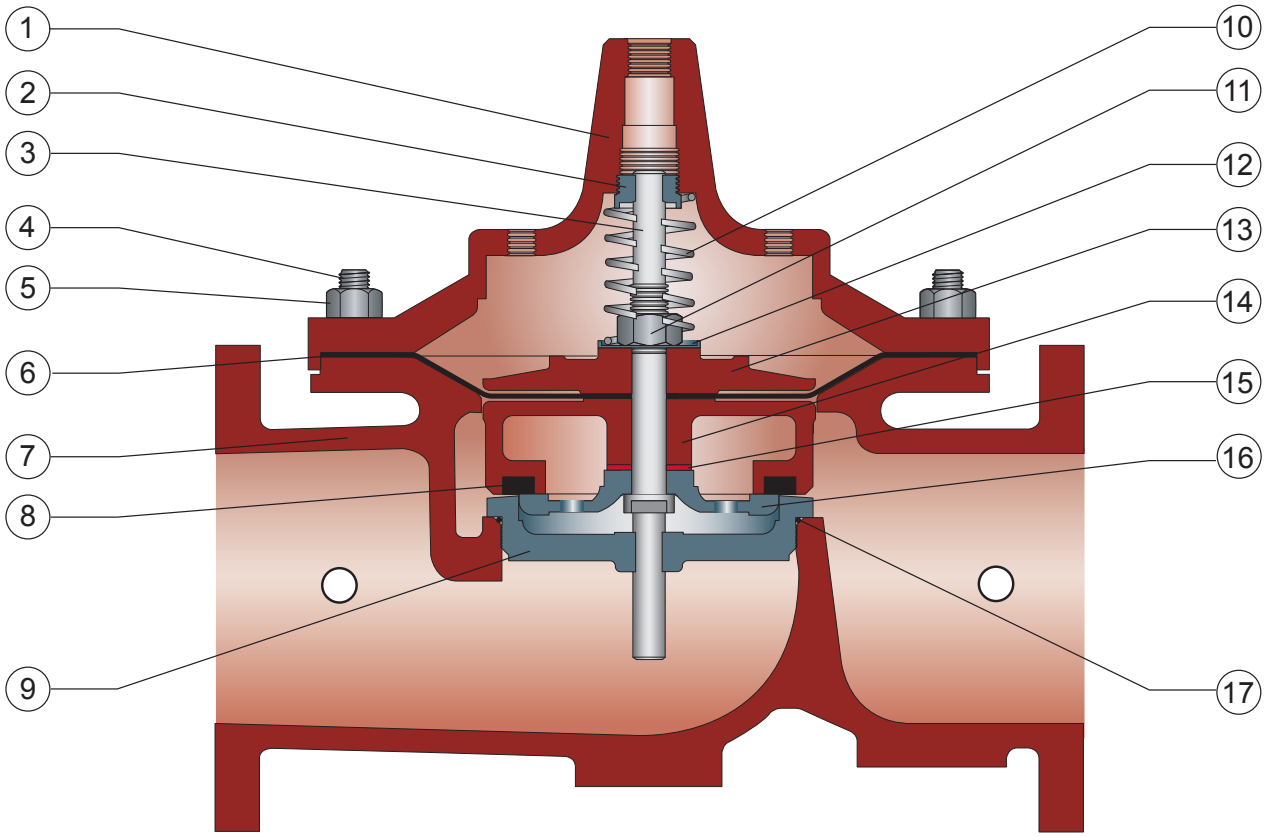

ITEM	DESCRIPTION	MATERIAL
1	Cover	ASTM A536 65-45-12 Epoxy Coated Ductile Iron
2	Cover Bearing	ASTM A276 304 Stainless Steel
3	Shaft / Stem	ASTM A276 304 Stainless Steel
4	Stud	ASTM A570 Gr.33 Zinc Plated Steel
5	Cover Nut	ASTM A570 Gr.33 Zinc Plated Steel
6	**Diaphragm***	Buna-N (Nitrile)
7	Body	ASTM A536 65-45-12 Epoxy Coated Ductile Iron
8	**Seat Disc***	Buna-N (Nitrile)
9	Seat Ring	ASTM A743 CF8M (316) Stainless Steel
10	Spring	ASTM A276 302 Stainless Steel
11	Stem Nut	ASTM A276 304 Stainless Steel
12	Spring Washer	ASTM A276 304 Stainless Steel
13	Diaphragm Washer	ASTM A536 65-45-12 Epoxy Coated Ductile Iron
14	Disc Retainer	ASTM A536 65-45-12 Epoxy Coated Ductile Iron
15	**Spacer Washer***	Fiber*
16	Disc Guide	ASTM A743 CF8M (316) Stainless Steel
17	**Seat Gasket***	Buna-N (Nitrile)

** Contained in Main Valve Repair Kit*

TAG: SECTION 22 42 01 2.6 DAR REDUCED PRESSURE

ES-LF009

For Health Hazard Applications

Job Name WASTE WATER TREAMENT

Job Location IQUALUIT NUNAVUT

Engineer NUNAMI STANTEC

Approval _____

Contractor _____

Approval _____

Contractor's P.O. No. _____

Representative _____

LEAD FREE* ***2 INCHES AND 1-1/4 SECTION 2.7***

Series LF009

Reduced Pressure Zone Assemblies

Sizes: ¼" – 3" (8 – 80mm)

Series LF009 Reduced Pressure Zone Assemblies are designed to protect potable water supplies in accordance with national plumbing codes and water authority requirements. This series can be used in a variety of installations, including the prevention of health hazard cross-connections in piping systems or for containment at the service line entrance.The LF009 features Lead Free* construction to comply with Lead Free* installation requirements.

This series features two in-line, independent check valves, captured springs and replaceable check seats with an intermediate relief valve. Its compact modular design facilitates easy maintenance and assembly access. Sizes ¼" – 1" (8 – 25mm) shutoffs have tee handles.

Features

- Single access cover and modular check construction for ease of maintenance
- Top entry - all internals immediately accessible
- Captured springs for safe maintenance
- Internal relief valve for reduced installation clearances
- Replaceable seats for economical repair
- Lead Free* cast copper silicon alloy body construction for durability ¼" – 2" (8 – 50mm)
- Fused epoxy coated cast iron body 2½" and 3" (65 and 80mm)
- Ball valve test cocks — screwdriver slotted ¼" – 2" (8 – 50mm)
- Large body passages provides low pressure drop
- Compact, space saving design
- No special tools required for servicing

Specifications

A Reduced Pressure Zone Assembly shall be installed at each potential health hazard location to prevent backflow due to backsiphonage and/or backpressure. The assembly shall consist of an internal pressure differential relief valve located in a zone between two positive seating check modules with captured springs and silicone seat discs. Seats and seat discs shall be replaceable in both check modules and the relief valve. There shall be no threads or screws in the waterway exposed to line fluids. Service of all internal components shall be through a single access cover secured with stainless steel bolts. Body and shutoffs shall be constructed using Lead Free* cast copper silicon alloy materials. Lead Free* reduced pressure zone assembly shall comply with state codes and standards, where applicable, requiring reduced lead content.

The assembly shall also include two resilient seated isolation valves, four resilient seated test cocks and an air gap drain fitting. The assembly shall meet the requirements of: USC; ASSE Std. 1013; AWWA Std. C511; CSA B64.4. Shall be a Watts Series LF009.



LF009

2" ON DOMESTIC COLD WATER
1 1/4 " DOMESTIC HOT WATER

DRAWING M603

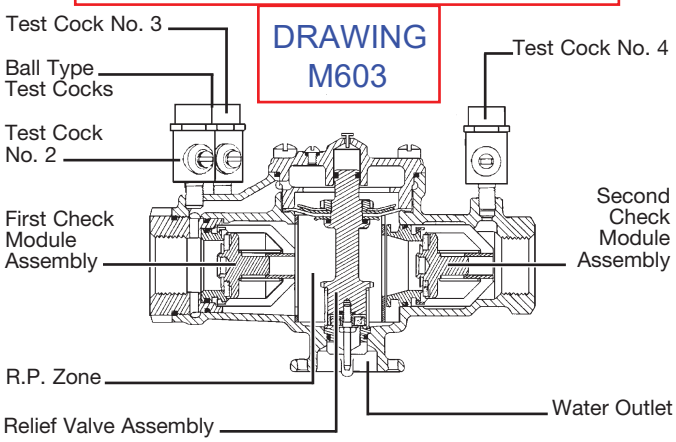

Now Available
WattsBox Insulated Enclosures.
For more information, send for literature ES-WB.

NOTICE

Inquire with governing authorities for local installation requirements

NOTICE

The information contained herein is not intended to replace the full product installation and safety information available or the experience of a trained product installer. You are required to thoroughly read all installation instructions and product safety information before beginning the installation of this product.

***The wetted surface of this product contacted by consumable water contains less than 0.25% of lead by weight.**

Watts product specifications in U.S. customary units and metric are approximate and are provided for reference only. For precise measurements, please contact Watts Technical Service. Watts reserves the right to change or modify product design, construction, specifications, or materials without prior notice and without incurring any obligation to make such changes and modifications on Watts products previously or subsequently sold.

WATTS®

TAG: SECTION 22 42 01 2.6 DAR REDUCED PRESSURE

Available Models: ¼" – 2" (8 – 50mm)

Suffix:

QT – quarter-turn ball valves
S – strainer
LF – without shutoff valves
PC – internal polymer coating

Prefix:

U – union connections

Available Models: 2½" – 3" (65 – 80mm)

Suffix:

NRS – non-rising stem resilient seated gate valves
OSY – UL/FM outside stem and yoke resilient seated gate valves
S-FDA – FDA epoxy coated strainer
QT-FDA – FDA epoxy coated quarter-turn ball valves
LF – without shutoff valves

Note: The installation of a drain line is recommended. When installing a drain line, an air gap is necessary (see ES-AG).

Materials: ¼" – 2" (8 – 50mm)

Lead Free* cast copper silicon alloy body construction, silicone rubber disc material in the first and second check plus the relief valve. Replaceable polymer check seats for first and second checks. Removable stainless steel relief valve seat. Stainless steel cover bolts.

Standardly furnished with NPT body connections.
Model LF009QT furnished with quarter-turn, full port, resilient seated, Lead Free* cast copper silicon alloy body ball valve shutoffs.

Materials: 2½" and 3" (65 – 80mm)

- (FDA approved) Epoxy coated cast iron unibody with plastic seats
- Relief valve with stainless steel seat and trim
- Lead Free cast copper silicon alloy body ball valve test cocks

Pressure / Temperature

Sizes ¼" – 2" (8 – 50mm) Suitable for supply pressure up to 175psi (12 bar). Water temperature: 33°F – 180°F (0.5° – 75°C).

Sizes 2½" and 3" (65 and 80mm) are suitable for supply pressures up to 175psi (12.1 bar) and water temperature at 110°F (43°C) continuous, 140°F (60°C) intermittent.

Standards

USC
ASSE No. 1013
AWWA C511
CSA B64.4
IAPMO File No. 1563.

Approvals

ASSE, AWWA, CSA, IAPMO

Approved by the Foundation for Cross-Connection Control and Hydraulic Research at the University of Southern California.

Approval models QT, PC, NRS, OSY.

UL Classified
2½" and 3" (65 and 80mm) with OSY gate valves.
¾" - 2" (20-50mm) without shutoff valves (-LF) (except LF009M3LF)

Air Gaps and Elbows

MODEL		DRAIN OUTLET		DIMENSIONS A		DIMENSIONS B		WEIGHT	
	for 909, 009 and 993 sizes	in.	mm	in.	mm	in.	mm	lbs.	kgs.
909AGA	¼"–½" 009, ¾" 009M2/M3	½	13	2⅜	60	3⅛	79	0.625	0.28
909AGC	¾"–1" 009/909, 1"–1½" 009M2	1	25	3¼	83	4⅞	124	1.5	0.68
→ 909AGF	1¼"–2" 009M1, 1¼"–3" 009/909, 2" 009M2, 4"–6" 993	2	51	4⅜	111	6¾	171	3.25	1.47
909AGK	4"–6" 909, 8"–10" 909M1	3	76	6⅜	162	9⅝	244	6.25	2.83
909AGM	8"–10" 909	4	102	7⅜	187	11¼	286	15.5	7.03
909ELA	¼"–½" 009, ¾" 009M2/M3	–	–	–	–	–	–	–	–
909ELC	¾"–1" 009/909	–	–	2⅜	60	2⅜	60	0.38	0.17
* 909ELF	1¼"-2" 009M1, 1¼"–2" 009/909, 2" 009M2, 4"–6" 993	–	–	3⅝	92	3⅝	92	2	0.91
* 909ELH Vertical	2½"–3" 009/909	–	–	–	–	–	–	–	–

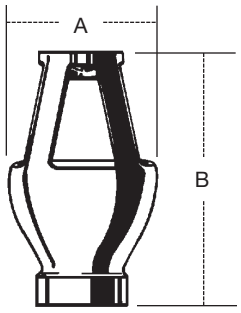

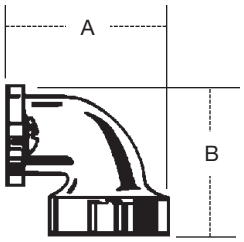

Dimensions and Weight: ¼" – 2" (8 – 50mm) LF009

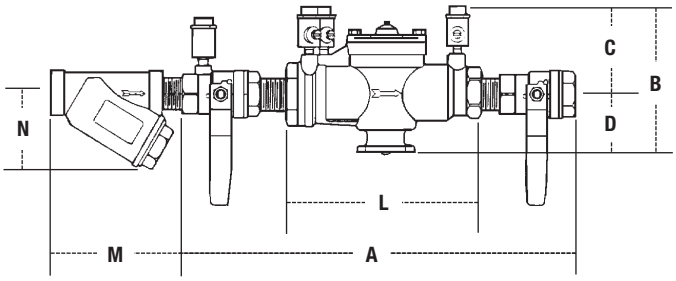

LF009 ¼" – 2"

SIZE (DN)		DIMENSIONS (APPROX.)														WEIGHT	
		A		B		C		D		L		M		N			
in.	mm	in.	mm	in.	mm	in.	mm	in.	mm	in.	mm	in	mm	in	mm	lbs.	kgs.
¼	8	10	250	4⅝	117	3⅜	86	1¼	32	5½	140	2⅜	60	2½	64	5	2
⅜	10	10	250	4⅝	117	3⅜	86	1¼	32	5½	140	2⅜	60	2½	64	5	2
½	15	10	250	4⅝	117	3⅜	86	1¼	32	5½	140	2¾	70	2¼	57	5	2
¾	20	10¾	273	5	127	3½	89	1½	38	6¾	171	3 3/16	81	2¾	70	6	3
1	25	14½	368	5½	140	3	76	2½	64	9½	241	3¾	95	3	76	12	5
1¼	32	17⅜	441	6	150	3½	89	2½	64	11⅜	289	4 7/16	113	3½	89	15	6
1½	40	17⅞	454	6	150	3½	89	2½	64	11⅛	283	4⅜	124	4	102	16	7
2	50	21⅜	543	7¾	197	4½	114	3¼	83	13½	343	5 5/16	151	5	127	30	13

2.7

Dimensions and Weight: 2½" and 3" (65 and 80mm) LF009

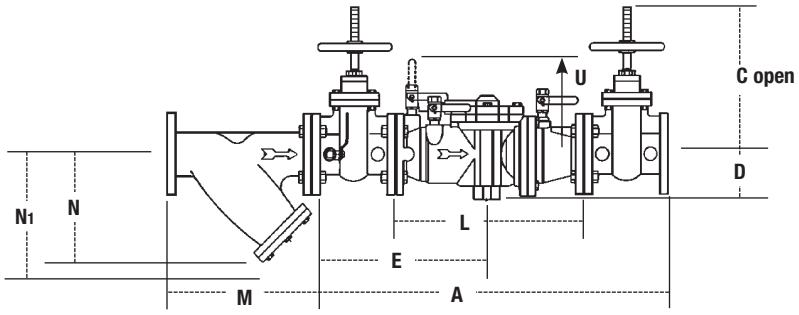

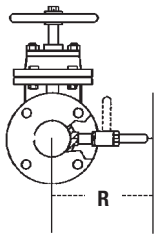

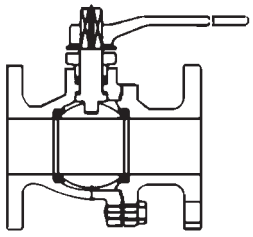

Watts G-4000 Series
QT – Ball Valves

STRAINER SIZE		DIMENSIONS (APPROX.)						WEIGHT	
		M		N		N1†			
in.	mm	in.	mm	in.	mm	in.	mm	lbs.	kgs.
2½	65	10	254	6½	165	9¾	248	28	12.7
3	80	10⅛	257	7	178	10	254	34	15.4

†Clearance for servicing

MODEL	SIZE DN		DIMENSIONS (APPROX.)														WEIGHT	
			A		C		D		E		L		R		U			
	in.	mm	in.	mm	in.	mm	in.	mm	in.	mm	in.	mm	in.	mm	in.	mm	lbs.	kgs.
LF009LF	2½	65	—	—	—	—	4½	114	—	—	18⅛	460	—	—	10⅝	270	76	34.5
LF009OSY	2½	65	33¼	845	15⅞	403	4½	114	16⅜	416	18⅛	460	7¾	197	10⅝	270	166	75.3
LF009NRS	2½	65	33¼	845	11⅜	289	4½	114	16⅜	416	18⅛	460	7¾	197	10⅝	270	161	73.0
LF009QTFDA	2½	65	33¼	845	6	152	4½	114	16⅜	416	18⅛	460	7¾	197	10⅝	270	150	68.0
LF009LF	3	80	—	—	—	—	4½	114	—	—	18⅛	460	—	—	10⅝	270	76	34.5
LF009OSY	3	80	34¼	870	18½	470	4½	114	16⅝	422	18⅛	460	8¾	222	10⅝	270	198	89.8
LF009NRS	3	80	34¼	870	12¾	324	4½	114	16⅝	422	18⅛	460	8¾	222	10⅝	270	191	86.6
LF009QTFDA	3	80	34¼	870	7	178	4½	114	16⅝	422	18⅛	460	8¾	222	10⅝	270	158	71.7

Capacity

Performance as established by an independent testing laboratory.

*Typical maximum system flow rate (7.5 feet/sec., 2.3 meters/sec.)

¼" (8mm) LF009QT

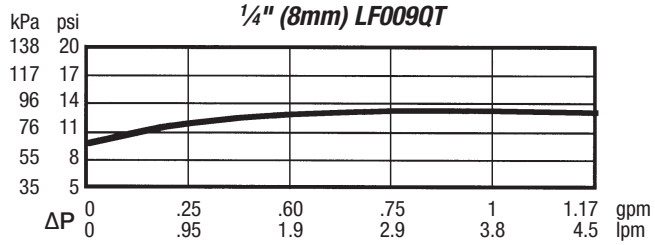

⅜" (10mm) LF009QT

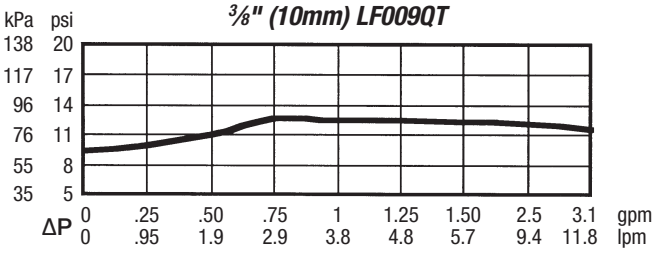

½" (15mm) LF009QT

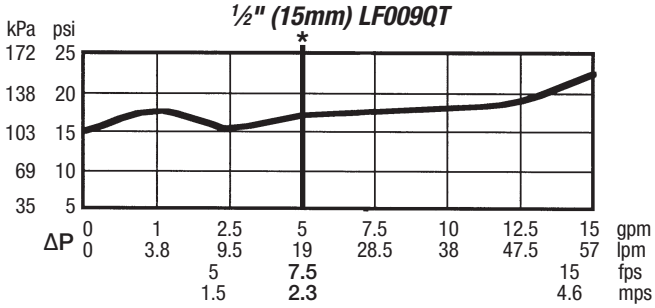

¾" (20mm) LF009M3QT

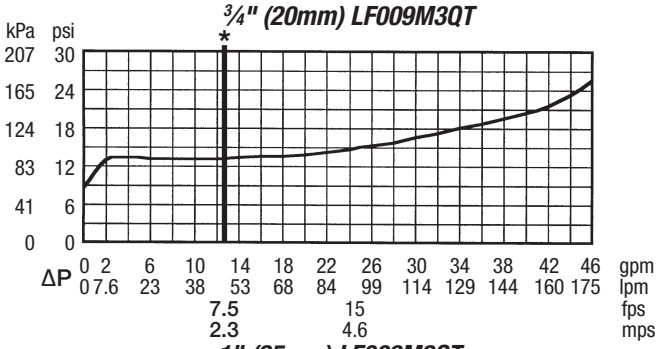

1" (25mm) LF009M2QT

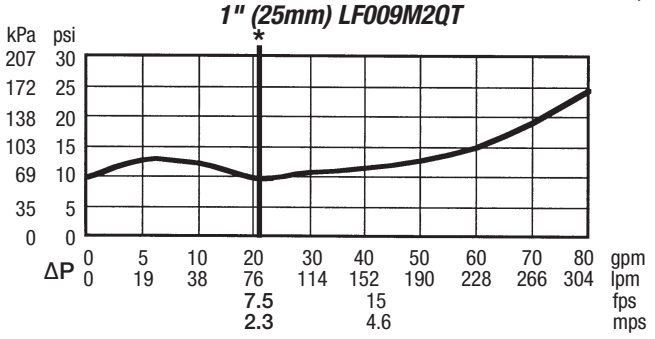

1¼" (32mm) LF009M2QT

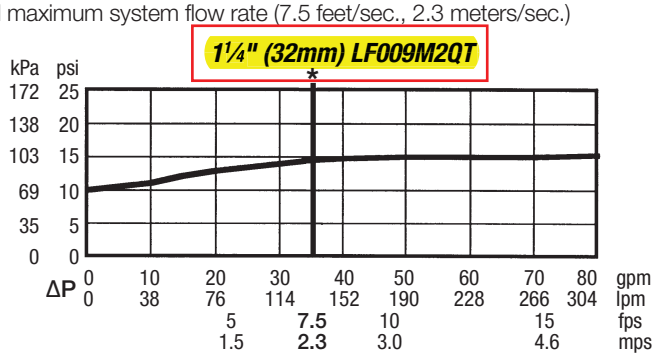

1½" (40mm) LF009M2QT

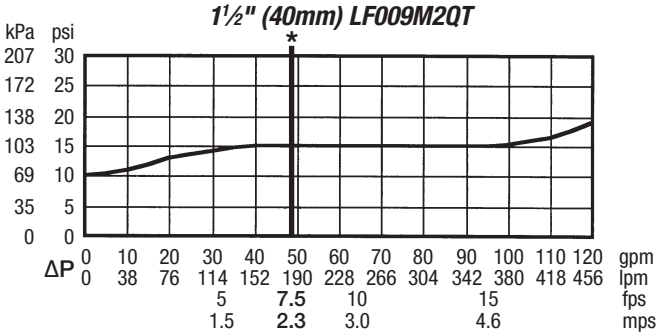

2" (50mm) LF009M2QT

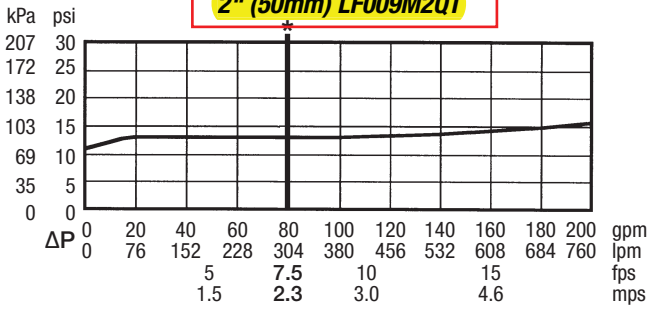

2½" (65mm) LF009

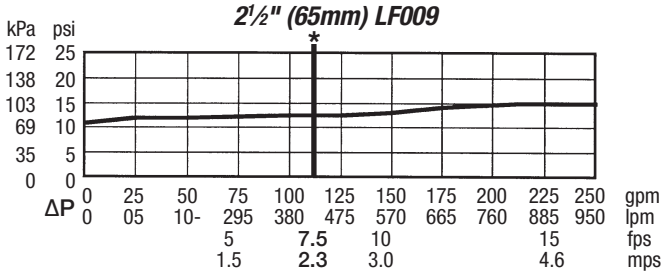

3" (80mm) LF009

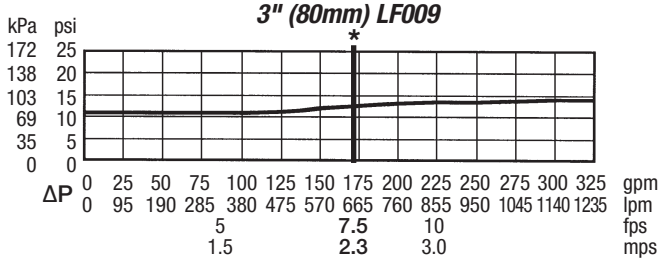

© 2014 Watts

Air Gaps, Elbows and Test Cocks

Job Name _____ Contractor _____

Job Location _____ Approval _____

Engineer _____ Contractor's P.O. No. _____

Approval _____ Representative _____

Air Gaps, Elbows and Test Cocks

for Reduced Pressure Zone Assemblies

REVIEWED BY MV

Air Gaps

An air gap provides the unobstructed, physical separation between the discharge end of a potable water supply line and an open receiving vessel.

The installation of an air gap and drain line are recommended.

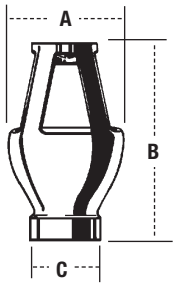

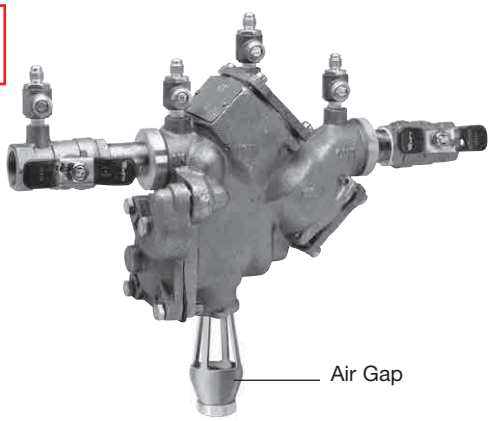

909 QT/LF909 QT

MODEL	ORDERING CODE	SERIES/ SIZES	DIMENSIONS						WEIGHT	
			A		B		C (NPT)			
			in.	*mm*	*in.*	*mm*	*in.*	*mm*	*lbs*	*kgs*
909AGA	0881399	½" – ½" 009/LF009 ¾" 009/LF009M2/M3 ½" – 1" 995	2⅜	60	3⅛	79	½	13	.63	.28
909AGC	0881376	¾" – 1" 009/LF009, 909/LF909 1" – 1½" 009/LF009M2 1¼" – 2" 995	3¼	83	4⅞	124	1	25	1.50	.68
909AGF	0881378	1¼" – 3" 009/LF009, 909/LF909 1¼" – 2" 009/LF009M1 2" 009/LF009M2	4⅜	111	6¾	171	2	51	3.25	1.47
909AGK	0881385	4" – 6" 909/LF909 4" – 10" 909RPDA 8" – 10" 909/LF909M1	6⅜	162	9⅝	244	3	76	6.25	2.83
909AGM	0881387	8" – 10" 909/LF909	7⅜	187	11¼	286	4	102	15.50	7.03
919 AGC	0881576	¾"-1" 919/LF919	2⅜	60	3 ⅛	79	½	13	0.63	0.28
919 AGF	0881577	1¼"-2" 919/LF919	4⅜	111	8 ½	216	2	51	3.5	1.6
957AG	0111764	2½" – 10" 957	7½	190	10⅜16	258	2	51	1.50	.68
Splash Guard										
994AGK-P	0881397	2½" – 10" 994	8	203	11¼	286	2	51	1.50	0.68
995-AG	0439190	3" – 6" 995	5	127	8	203	2	51	–	–
957AG	0111815	2½" – 10" 957	4¾	119	2½	62	–	–	.4	0.18

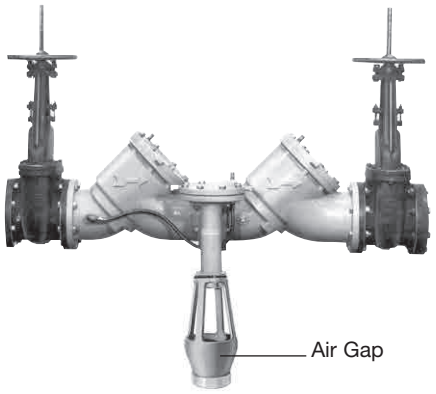

909 OSY/ LF909 OSY

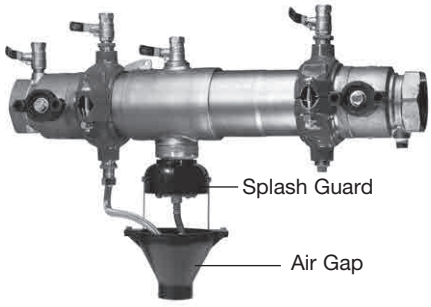

957 QT

NOTICE

Inquire with governing authorities for local installation requirements

Watts product specifications in U.S. customary units and metric are approximate and are provided for reference only. For precise measurements, please contact Watts Technical Service. Watts reserves the right to change or modify product design, construction, specifications, or materials without prior notice and without incurring any obligation to make such changes and modifications on Watts products previously or subsequently sold.

WATTS®

TAG: SECTION 22 42 01 2.6 DAR REDUCED PRESSURE

ES-957/957N/957Z

For Health Hazard Applications

Job Name WASTE WATER TREAMENT

Job Location IQUALUIT NUNAVUT

Engineer NUNAMI STANTEC

Approval _____

Contractor _____

Approval _____

Contractor's P.O. No. _____

Representative _____

LEAD FREE* ***3 INCHES***

Series 957, 957N, 957Z

Reduced Pressure Zone Assemblies

Sizes: 2½" – 10" (65 – 250 mm)

Series 957, 957N, 957Z Reduced Pressure Zone Assemblies provide protection to the potable water system from contamination in accordance with national plumbing codes. Series 957, 957N, 957Z are normally used in health hazard applications for protection against backsiphonage or backpressure.

Features

- 2½" 3" and 4" (65, 80 and 100mm) sizes available with quarter-turn ball valve shutoffs
- Replaceable check disc rubber
- Extremely compact design
- 70% Lighter than traditional designs
- 304 (Schedule 40) stainless steel housing & sleeve
- Groove fittings allow integral pipeline adjustment
- Patented torsion spring checks provide lowest pressure loss
- Unmatched ease of serviceability
- Bottom mounted cast stainless steel relief valve
- Available with grooved butterfly valve shutoffs

Specifications

The Reduced Pressure Zone Assembly shall consist of two independent torsion spring check modules, a differential pressure relief valve located between and below the two modules, two drip tight shutoff valves, and required torsion spring check modules and relief valve shall be contained with a sleeve accessible single housing constructed from 304 (Schedule 40) stainless steel pipe with groove end connections. Torsion spring checks shall have replaceable elastomer discs and in operation produce drip tight closure against the reverse flow of liquid caused by backpressure or backsiphonage. Assembly shall be a Watts Regulator Company Series 957, 957N, 957Z.

NOTICE

Inquire with governing authorities for local installation requirements

***The wetted surface of this product contacted by consumable water contains less than 0.25% of lead by weight.**

ON NON-POTABLE WATER
NPW
DRAWING
M603



957-NRS ~~957OSY~~

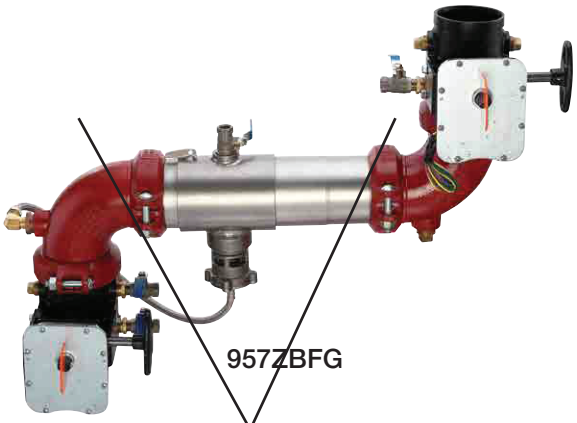

957ZBFG

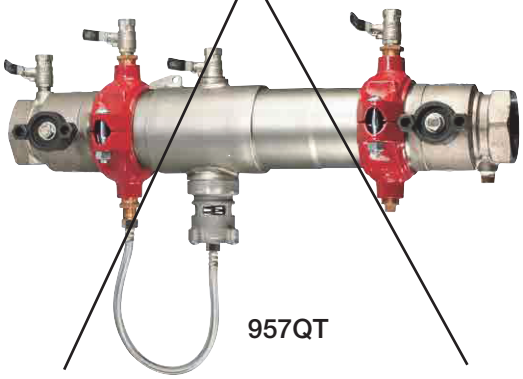

957QT

NOTICE

The information contained herein is not intended to replace the full product installation and safety information available or the experience of a trained product installer. You are required to thoroughly read all installation instructions and product safety information before beginning the installation of this product.

Watts product specifications in U.S. customary units and metric are approximate and are provided for reference only. For precise measurements, please contact Watts Technical Service. Watts reserves the right to change or modify product design, construction, specifications, or materials without prior notice and without incurring any obligation to make such changes and modifications on Watts products previously or subsequently sold.

WATTS®

TAG: SECTION 22 42 01 2.6 DAR REDUCED PRESSURE

Available Models

Suffix:

NRS –	non-rising stem, resilient seated gate valves
OSY –	UL/FM outside stem and yoke resilient seated gate valves
BFG –	UL/FM grooved gear operated butterfly valves with tamper switch
QT –	2½" - 4" (65 - 100mm) quarter-turn ball valves
**OSY FxG –	Flanged inlet gate connection and grooved outlet gate connection
**OSY GxF –	Grooved inlet gate connection and flanged outlet gate connection
**OSY GxG –	Grooved inlet gate connection and grooved outlet gate connection

Available with grooved NRS gate valves - consult factory**
Post indicator plate and operating nut available - consult factory**
**Consult factory for dimensions

Note: When installing a drain line on Series 957 backflow preventers, use 957AG air gaps. See ES-AG/EL/TC for additional information.

Materials

Housing & Sleeve: 304 (Schedule 40) Stainless Steel
Elastomers: EPDM, Silicone and Buna-N
Torsion Spring Checks: Noryl®, Stainless Steel
Check Discs: Reversible Silicone or EPDM
Test Cocks: Bronze Body Nickel Plated
Pins & Fasteners: 300 Series Stainless Steel
Springs: Stainless Steel

Pressure — Temperature

Temperature Range: 33°F – 140°F (0.5°C – 60°C)
Maximum Working Pressure: 175psi (12.1 bar)

Approvals

ASSE 1013 | CSA B64.4 | ** cULus CLASSIFIED (**BFG & OSY Only) | ** FM Approved | NSF Certified to NSF/ANSI 61-G

Dimensions — Weight

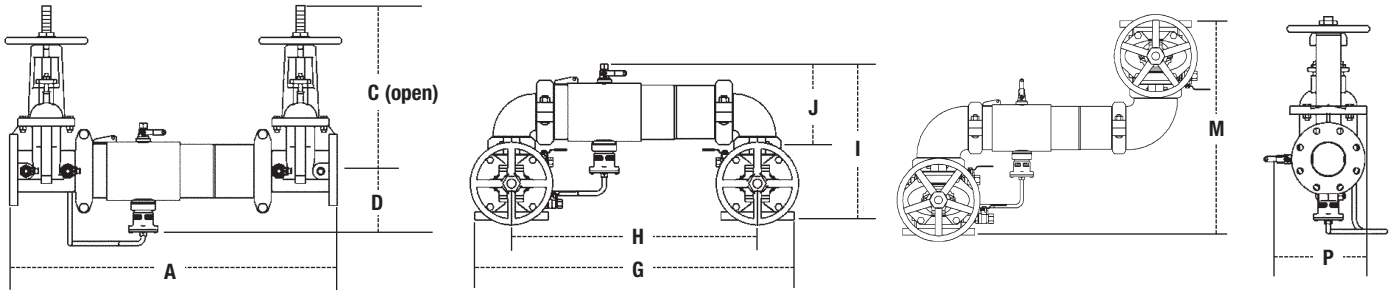

957, 957N, 957Z

SIZE (DN)		DIMENSIONS																WEIGHT					
		A		C (OSY)		C (NRS)		D		G		H		I		J		M		P		957NRS		957OSY		957N NRS		957N OSY	
in.	mm	in.	mm	in.	mm	in.	mm	in.	mm	in.	mm	in.	mm	in.	mm	in.	mm	in.	mm	in.	mm	lbs.	kgs.	lbs.	kgs.	lbs.	kgs.	lbs.	kgs.
2½	65	30¾	781	16⅜	416	9⅜	238	6½	165	29 1/16	738	21½	546	15½	393	8 13/16	223	21¼	540	9 3/16	234	118	54	128	58	126	57	136	62
3	80	31¾	806	18⅞	479	10¼	260	6 11/16	170	30¼	768	22¼	565	17⅛	435	9 3/16	233	23	584	10½	267	134	61	148	67	147	67	161	73
4	100	33¾	857	22¾	578	12 3/16	310	7	178	33	838	23½	597	18½	470	9 15/16	252	26¼	667	11 3/16	284	164	74	164	74	187	85	187	85
6	150	43½	1105	30⅛	765	16	406	8½	216	44¾	1137	35¼	895	23 3/16	589	13 1/16	332	34¼	870	15	381	276	125	298	135	317	144	339	154
8	200	49¾	1264	37¾	959	19 15/16	506	9 11/16	246	54⅛	1375	40⅛	1019	27 7/16	697	15 11/16	399	36⅞	937	17 3/16	437	441	200	483	219	516	234	558	253
10	250	57¾	1467	45¾	1162	23 13/16	605	11 3/16	285	66	1676	49½	1257	32½	826	17 5/16	440	44½	1124	20	508	723	328	783	355	893	405	950	431

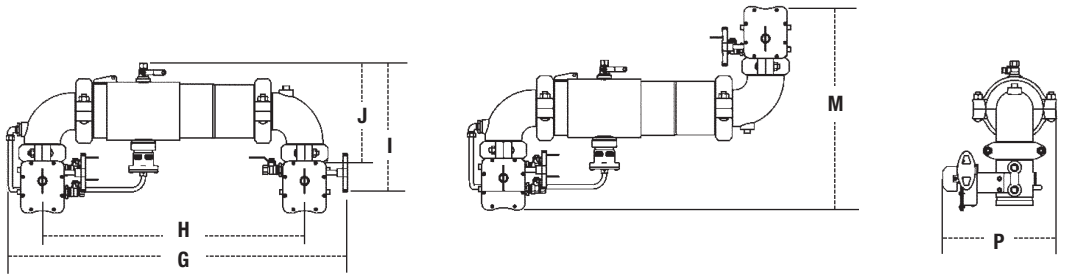

957NBFG, 957ZBFG

SIZE (DN)		DIMENSIONS												WEIGHT	
		G		H		I		J		M		P		957N/957Z	
in.	mm	in.	mm	in.	mm	in.	mm	in.	mm	in.	mm	in.	mm	lbs.	kgs.
2½	65	32½	826	23	584	15½	394	9½	241	19¾	502	11 13/16	300	67	30
3	80	34	864	24	610	16 5/16	414	10 1/16	256	21¼	540	12⅛	308	70	32
4	100	35⅝	905	25½	648	17 3/16	437	10 15/16	279	23½	597	12⅝	321	87	39
6	150	46½	1181	35¼	895	20½	521	13½	343	27¼	692	15	382	160	73

Noryl® is a registered trademark of SABIC Innovative Plastics Holding BV.

TAG: SECTION 22 42 01 2.6 DAR REDUCED PRESSURE

Capacity

Series 957, 957N, 957Z flow curves as tested by Underwriters Laboratory.

Flow characteristics collected using butterfly shutoff valves

——— Horizontal ——— N-Pattern - - - - - Z-Pattern

Flow capacity chart identifies valve performance based upon rated water velocity up to 25fps

- Service Flow is typically determined by a rated velocity of 7.5fps based upon schedule 40 pipe.
- Rated Flow identifies maximum continuous duty performance determined by AWWA.
- UL Flow Rate is 150% of Rated Flow and is not recommended for continuous duty.
- AWWA Manual M22 [Appendix C] recommends that the maximum water velocity in services be not more than 10fps.

2½" (65mm)

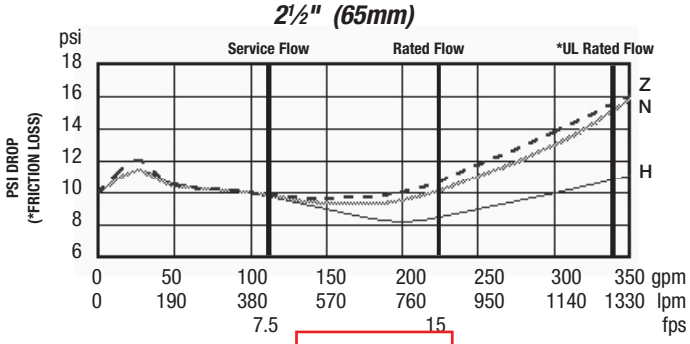

3" (80mm)

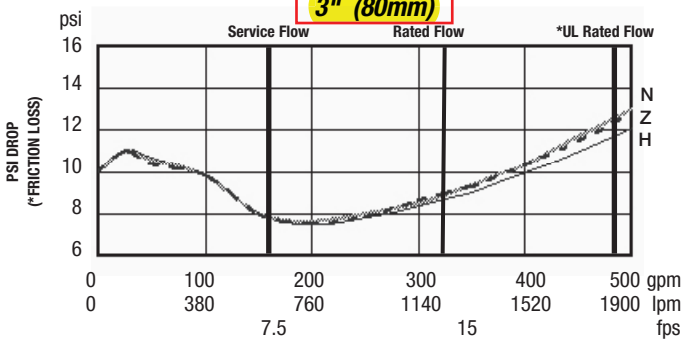

4" (100mm)

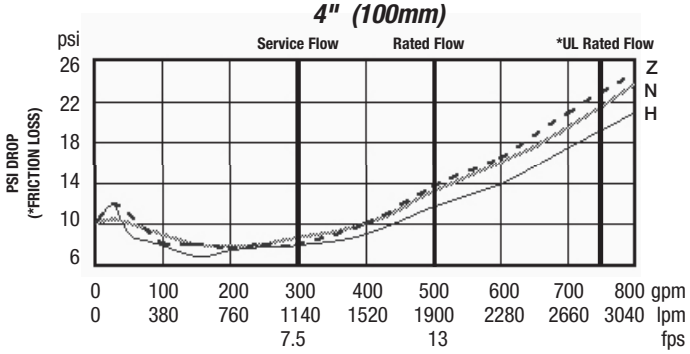

4" BFG (100 mm) Horizontal

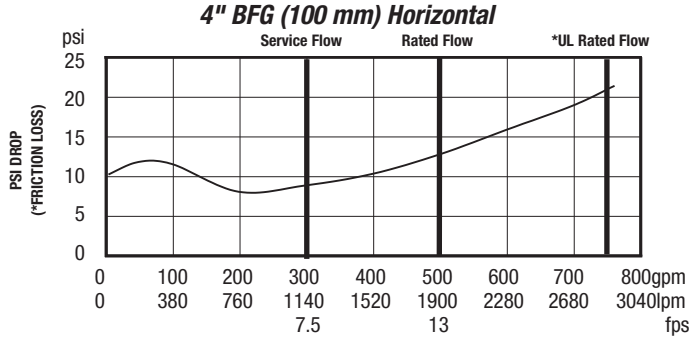

6" (150mm)

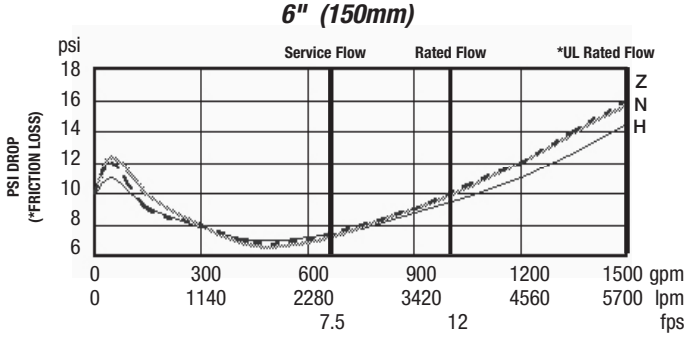

8" (200mm)

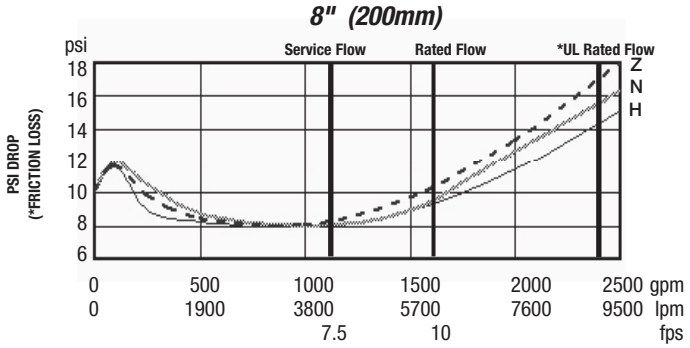

10" (250mm)

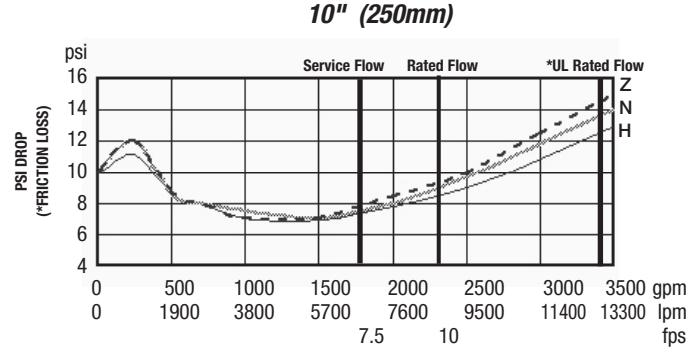

6" BFG (150 mm) Horizontal

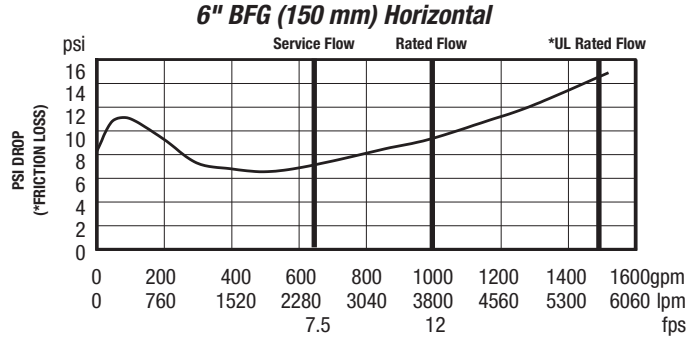

WATTS®

A Watts Water Technologies Company

USA: Tel: (978) 689-6066 • Fax: (978) 975-8350 • Watts.com
Canada: Tel: (905) 332-4090 • Fax: (905) 332-7068 • Watts.ca
Latin America: Tel: (52) 81-1001-8600 • Fax: (52) 81-8000-7091 • Watts.com

© 2014 Watts

REVIEWED BY CONTRACTOR
Kudlik Construction Ltd.
Name: Sandra Rousseau P.Eng
DATE: Jun 28, 2018

Mécanique Nordique
Plumbing
Heating
Ventillation
mecanique.nordique@hotmail.com

1255 Rue J.A.Bombardier
Lévis, Québec
G7A 2P4
Téléphone: 418-496-1109
Télécopieur: 418-496-3803

IQALUIT WWTP UPGRADE

DRAWING FOR APPROVAL

Ingineer : NUNAMI STANTEC

DRAWING #: AD-021

Section 22 13 18 23 05 00
Article 3.2.7 1.28
Plans
Application : FIRE COLLAR & FIRE SEALANT
Brand : HILTI
Model : CP643N FS-ONE MAX
Revised # :
Supplyer : HILTI

Pages incl. 3
Date : **2018-06-28**
By : **Mécanique Nordique Inc.**

STANTEC PROJECT #: 110126045
SUBMITTAL # AD-021

This review by Stantec is for general conformance with the design concept of Stantec's design of the:
☐ Architectural ☐ Electrical
☐ Structural ☐ Other
☑ Mechanical

component(s) only and does not mean that Stantec has verified or approves the shop drawing(s). The Contractor remains solely responsible for the shop drawing(s) and this review by Stantec does not relieve the Contractor of the Contractor's responsibility for errors or omissions in the shop drawing(s) or for meeting all requirements of the contract documents. This review does not mean that Stantec approves the detailed design inherent in the shop drawing, responsibility for which shall remain with the Contractor submitting same, nor does this review mean that Stantec accepts any deviation of the shop drawing(s) from the contract documents. The Contractor is responsible for confirming all dimensions and correlating them at the job site, for all construction means, methods and techniques, and for coordination of construction work of all trades, including coordination of all shop drawings.

Stantec

☑ REVIEWED
☐ REVIEWED, AS NOTED
☐ REVISE AND RESUBMIT
☐ NOT REVIEWED

DATE 2018-07-04
BY Brendan Zrum, P.Eng

Firestop Collar (CP 643N)

Product description

- A ready-to-use firestop collar, made of a galvanized steel housing and intumescent inserts for firestopping combustible pipes

Product features

- Ready-to-use collar
- No construction required
- Fast installation time
- Adjustable mounting tabs
- Low profile for tight installations

Areas of application

- Firestopping combustible pipes up to 6" diameter in penetrations through fire walls and floors
- Suitable for the following pipe materials:
- PVC, CPVC, ABS, PVDF, PP and FRPP

For use with

- Concrete, masonry, wood floor and gypsum wall assemblies
- Wall and floor assemblies rated up to 4 hours

Types of installation

- Wall: two collars, one on each side
- Floor: one collar on underside (bottom)

Example

- Waste water pipes
- Fresh water pipes

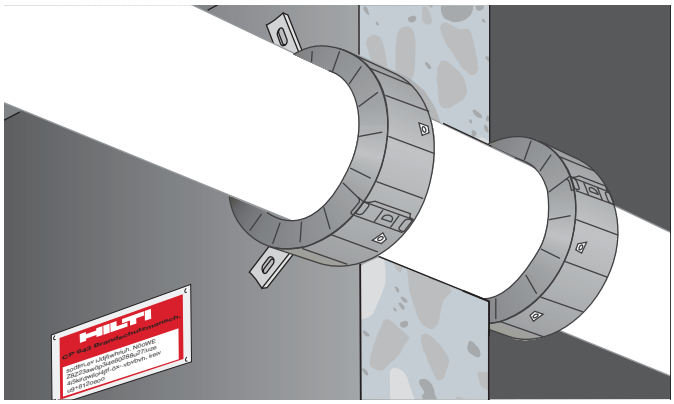

Technical Data	CP 643N		
Description	Pipe outside dia (in.)	Collar outside dia. (in.)	Collar Height (in.)	No. of hooks and fasteners
CP 643-50/1.5"N	1.4–2.0	2.8	0.9	2
CP 643-63/2"N	2.0–2.5	3.4	1.3	2
CP 643-90/3"N	2.6–3.6	4.9	1.7	3
CP 643-110/4"N	3.6–4.5	6.0	1.9	3
CP 643-160/6"N	6.6	9.8	1.9	4
Temperature resistance	-40°F to 140°F (–40°C to 60°C)		
Intumescent activation	Approx. 392°F (200°C)		
Expansion ratio (unrestricted)	Up to 1:10		
Tested in accordance with • UL 1479 • ASTM E 814 • ASTM G21 • CAN/ULC-S115			

FIRESTOP DEVICE
FOR USE IN THROUGH-PENETRATION FIRESTOP SYSTEMS
SEE UL FIRE RESISTANCE DIRECTORY 5N76

FM APPROVED

FBC SYSTEM COMPATIBLE
Visit fbcsystemcompatible.com.
FBC™ is a trademark of the Lubrizol Corporation.

Installation instructions for CP 643N

Notice

- Before handling, read Material Safety Data Sheet and product label for safe usage and health information.
- Instructions below are general guidelines — always refer to the applicable drawing in the UL Fire Resistance Directory or Hilti Firestop Systems Guide for complete installation information

Opening

1. Clean the plastic pipes. Expansion of the intumescent material during a fire acts to close the plastic pipe. Very dirty pipes (ie: with remains of mortar) may lead to a delay in this closing action. Soiled plastic pipes should, therefore, be cleaned in the area where the CP 643N Firestop Collar is to be installed.

Application of firestop system

2. Seal the opening if required. Gaps may be closed with FS-ONE. The approved methods vary and are given in the specific UL system.
3. Close the CP 643N Firestop Collar. Place the CP 643N Firestop Collar around the plastic pipe and lock the closure by applying firm pressure until it latches.
4. Attach fastening hooks. The fastening hooks can be attached to various points on the metal housing. This allows the fastening points to be made to suit the space available in each case. The hooks must be positioned as symmetrically as possible. The required number of fastening hooks is indicated on the packaging.
5. Fastening the CP 643N Firestop Collar. Only when fastened properly can CP 643N offer protection against fire.

a. Mark the fastening points.

b. Drill holes with a Hilti rotary hammer drill (i.e. TE 4-A18) or, depending on base material, fasten using Hilti powder-actuated tool.

c. To secure the CP 643N Firestop Collar, use Hilti anchors/fasteners.

d. For maintenance reasons, a penetration can be permanently marked with an identification plate and fastened in a visible position next to the seal.

Not for use

- With metal pipes
- In highly corrosive surroundings
- With unapproved anchors/fasteners

Storage

- Store only in the original packaging in a location protected from moisture

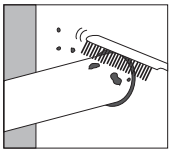

1. Clean plastic pipe.

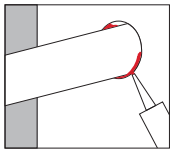

2. Close remaining gap to provide smoke and gas resistant seal.

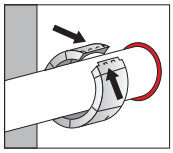

3. Close collar.

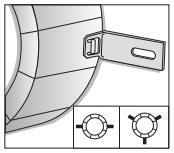

4. Attach fastening hooks.

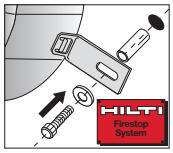

5. Fasten collar and identification plate (if required).

Hilti Firestop
Saving lives through innovation and education

Hilti. Outperform. Outlast.

High performance intumescent firestop sealant FS-ONE MAX

Product description

- Intumescent (expands when exposed to fire) firestop sealant that helps protect combustible and non-combustible penetrations for up to 4 hours fire rating

Applications

- Effectively seals most common through penetrations in a variety of base materials
- For use on concrete, masonry and drywall
- Mixed and multiple penetrations
- Metal pipe penetrations
- Insulated metal pipe penetrations
- Plastic pipe penetrations
- Cable bundles and trays
- HVAC penetrations

Advantages

- One product for a variety of common through penetrations
- Cost-effective and easy-to-use solution
- Water-based and paintable
- W-rated systems available
- Ethylene glycol-free
- Industry leading VOC results
- Convenient multi application firestop solution for penetrations

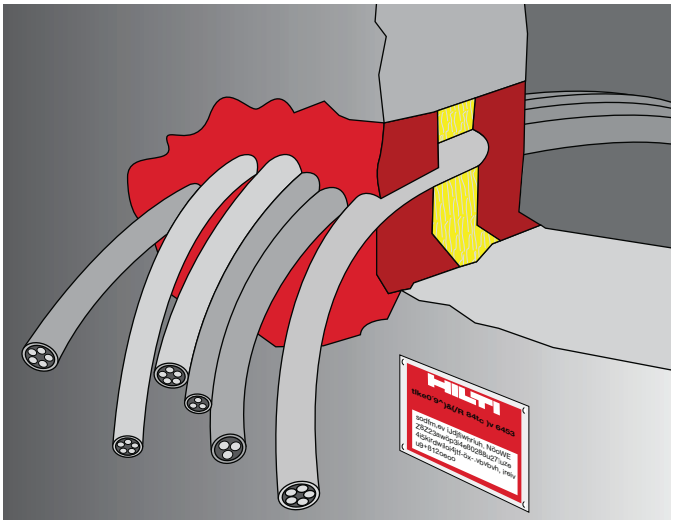

Technical Data*	
Chemical basis	Water-based acrylic dispersion
Color	Red
Application temperature	41°F to 104°F
Storage and transportation range	41°F to 77°F
Approx. cure time *	4 mm / 3 days
Shelf life	12 months **
Temperature resistance range	-4°F to 212°F
Mold and mildew performance	Class 0 (ASTM G21-13)
Mold and mildew resistant	Yes
Surface burning characteristics (ASTM E 84-14)	Flame Spread: 0 Smoke Development: 10
Approvals	California State Fire Marshal - in progress
Tested in accordance with	ASTM G21 ASTM E 90 CAN/ULC-S115 UL 1479 ASTM E 814 ASTM E84

* At 75°F (24°C) and 50% relative humidity
** from date of manufacture

CLASSIFIED C UL US
FILL, VOID OR CAVITY MATERIAL
FOR USE IN THROUGH-PENETRATION
FIRESTOP SYSTEMS
SEE UL FIRE RESISTANCE DIRECTORY
66Y7

FM APPROVED

FBC SYSTEM COMPATIBLE
Visit fbcsystemcompatible.com.
FBC™ is a trademark of the Lubrizol Corporation.

W rated

01/15 DBS

Mécanique Nordique
Plumbing
Heating
Ventillation
mecanique.nordique@hotmail.com
1255 Rue J.A.Bombardier Lévis QC G7A 2P4
Tél : (418) 496-1109 Fax : (418) 496-3803

REVIEWED BY CONTRACTOR
Kudlik Construction Ltd.
NAME: Sandra Rousseau P.Eng
DATE: Jul 03, 2018

IQUALUIT WWTP UPGRADES

DRAWING FOR APPROVAL

ENGINEER: **NUNAMI STANTEC LIMITED**

DRAWING #: AD-022

Section	:	22 05 23 VALVES FOR PLUMBING PIPING
Article	:	2.1 ,2.2 , 2.3 , 2.6 , 2.8
Plans	:	M603
Application	:	VALVES , CHECK VALVE , STRAINER
Brand	:	KITZ & TOYO
Model	:	
Revised #	:	
Supplyer	:	WOLSELEY
Date	:	**30/06/2018**
By	:	Martin Boucher

STANTEC PROJECT #: 110126045
SUBMITTAL # AD-022

This review by Stantec is for general conformance with the design concept of Stantec's design of the:
☐ Architectural ☐ Structural ☑ Mechanical ☐ Electrical ☐ Other

component(s) only and does not mean that Stantec has verified or approves the shop drawing(s). The Contractor remains solely responsible for the shop drawing(s) and this review by Stantec does not relieve the Contractor of the Contractor's responsibility for errors or omissions in the shop drawing(s) or for meeting all requirements of the contract documents. This review does not mean that Stantec approves the detailed design inherent in the shop drawing, responsibility for which shall remain with the Contractor submitting same, nor does this review mean that Stantec accepts any deviation of the shop drawing(s) from the contract documents. The Contractor is responsible for confirming all dimensions and correlating them at the job site, for all construction means, methods and techniques, and for coordination of construction work of all trades, including coordination of all shop drawings.

Stantec

☐ REVIEWED
☑ REVIEWED, AS NOTED
☐ REVISE AND RESUBMIT
☐ NOT REVIEWED

DATE 2018-07-04
BY Brendan Zrum, P.Eng

TAG: SECTION 22 05 23 2.1 BALL VALVE SOLDERED

RWV®

ECO-VALVE

Figure # 5049AB

Low Lead Brass Ball Valve (1/2"-2")

NOTE RED-WHITE = TOYO



Product Features

- 150# WSP / 600# WOG
- Forged Brass Body
- Full Port
- Adjustable Packing
- Solder Ends
- Blow-Out Proof Stem
- MSS-SP-110
- AB1953, NSF-61, NSF-372 Certified

Certified to ANSI/NSF 61

Pressure/Temperature Rating	
600 PSI from 15F to 160 F	150 PSI MAX at 366F

Connection Working Pressure				
Solder used in joints	Working Temp deg. °F	Maximum working pressure (PSI)		
		3/8" - 1"	1-1/4" -2"	2-1/2" - 3"
95-5 Tin Antimony (ASTM B32 grade 95TA)	100	500	400	300
	150	400	350	275
	200	300	250	200
	250	200	175	150

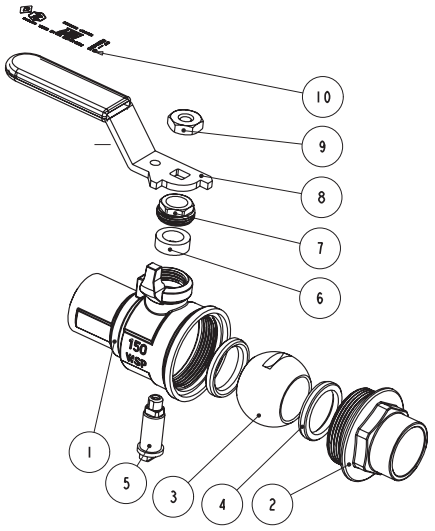

Materials & Specifications

Item	Description	Material	Specification
1	Body	Low Lead Brass	C28500
2	End piece	Low Lead Brass	C28500
3	Ball	Low Lead Brass/Cr Plated	C28500
4	Seat	PTFE	PTFE
5	Stem	Low Lead Brass	C28500
6	Packing	PTFE	PTFE
7	Packing nut	Brass	B124 C37700
8	Handle	Steel/Dc plated	A36 Dacromet
9	Handle nut	Steel/Zn plated	A36
10	Valve info	-	-

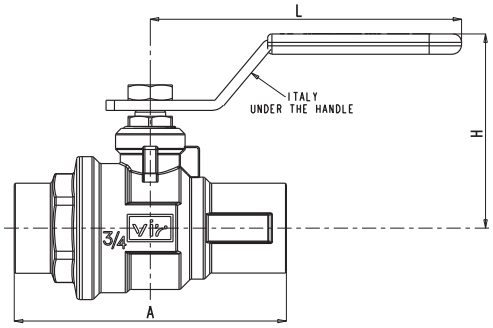

Dimensions, Weights (inches-lbs.) & Valve Data

Size	1/2	3/4	1	1-1/4	1-1/2	2
Ø	0.627-0.631	0.877-0.881	1.128-1.131	1.378-1.381	1.628-1.632	2.128-2.132
A	2.60	3.15	3.31	3.86	4.53	5.51
C	0.51	0.75	0.91	0.97	1.09	1.34
H	2.13	2.24	2.57	2.79	3.28	3.58
L	3.60	3.60	4.98	4.98	5.57	5.57
P	0.59	0.79	0.98	1.26	1.57	1.97
Cv	15	30	60	110	130	360
Wt	0.56	0.79	1.21	2.04	3.02	4.56

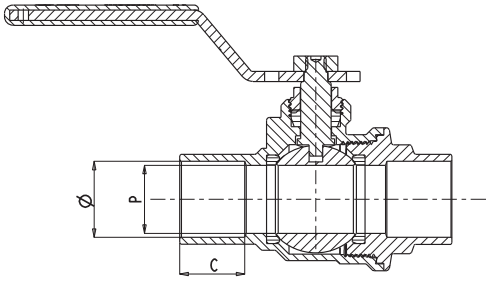

RED-WHITE VALVE CORP.
20600 Regency Lane, Lake Forest, CA 92630
TEL: 949.859.1010 • FAX: 949.859.7200 • www.redwhitevalvecorp.com

(160510)

237AB

Lead Free Brass Solder Ends Swing Check Valve

Feature

TAG: SECTION 22 05 23 2.2 CHECK VALVE

125# WSP / 200# WOG
Lead free brass body
Lead free brass disc
Solder x Solder
Solder ends (ASME B16.22)
Swing check
"Y" Pattern
MSS-SP-80
AB1953, NSF/ANSI 61 & 372 certified

Meet BAA requirement

C US
NSF/ANSI 61 & 372



Pressure/ Temperature rating	
200 psi from 15 °F to 160 °F	125 psi max. at 366 °F

NOTE : RED-WHITE = TOYO

Material

	Part	Material	Specification
1	Body	Lead Free Brass	ASTM B927 C28500
2	Disc	Lead Free Brass	ASTM B927 C28500
3	Stem	Lead Free Brass	ASTM B927 C28500
4	Screw	Lead Free Brass	ASTM B927 C28500
5	Gasket	PTFE	PTFE
6	Cap	Lead Free Brass	ASTM B927 C28500

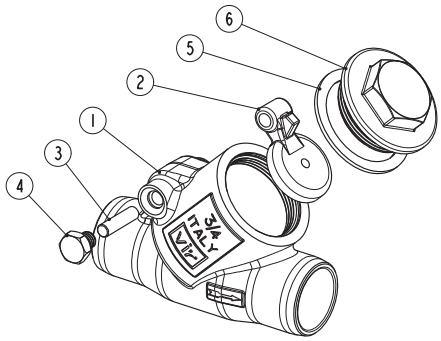

Dimension, Cv, Weight

Size	A [in]	H [in]	P [in]	Cv	Wt. L [lb]
½"	2.60	1.65	0.59	5.33	0.35
¾"	3.39	1.97	0.75	10.5	0.87
1"	4.09	2.28	0.98	19.0	1.33
1¼"	4.72	2.71	1.26	32.8	2.04
1½"	5.35	3.19	1.50	50.6	2.80
2"	6.69	3.86	1.97	88.1	4.78

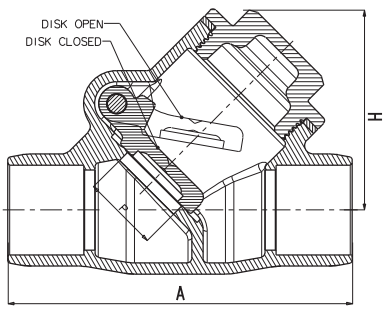

Drawings, photos and data are provided for information only and subject to change without notice. No part of this document may be reproduced, copied, modified or adapted, without the prior written consent of the copyright owner, unless otherwise indicated.
The Drinking Water Act has defined lead free as having the average wetted surface ratio of the fixture to contain less than .25% of lead per volume.
© 2018 Red-White Valve Corp. All Rights Reserved

TAG: SECTION 22 05 22 2.3 DRAIN VALVE KITZ

FORGED BRASS BALL VALVE

CAP & CHAIN

Two Piece Body • Full Port

Blowout Proof Stem • Chrome Plated Ball • PTFE Seats and Seals

CODE # 68C (AKTAFC)
THREADED x HOSE

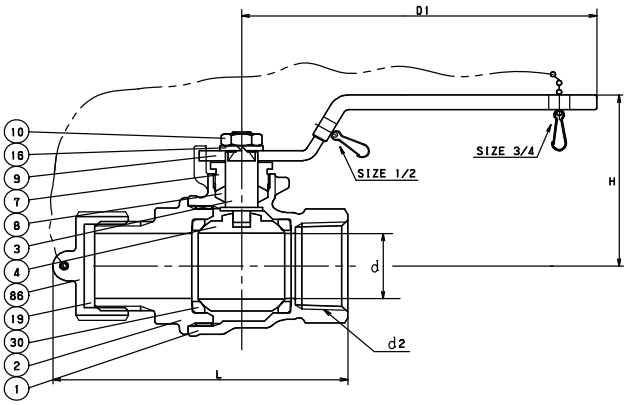

CODE # 69C (CTAFC)
SOLDER* x HOSE

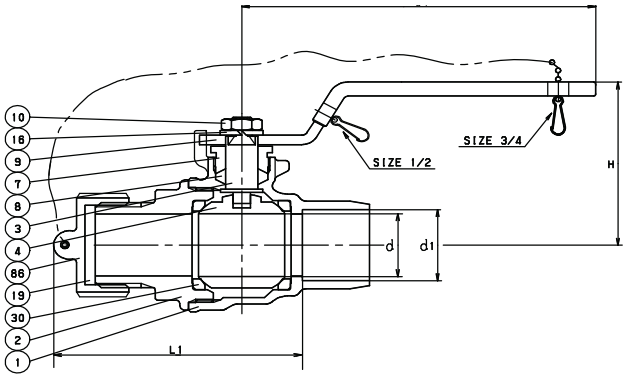

**REFERENCE VALVE INSTALLATION TIPS FOR SOUND SOLDER JOINTS (PAGE BV-66) OR SEE INSTALLATION SHEET PACKAGED WITH VALVE.*

STANDARDS	
END TO END	KITZ
THREADED ENDS	ANSI B1.20.1/ANSI B2.4 ¾ 11.5 NHR
SOLDER JOINT ENDS	ANSI B16.18/ANSI B2.4 ¾ 11.5 NHR
WALL THICKNESS	KITZ
CONFORMS TO MSS-SP 110	

PRESSURE/TEMPERATURE
150 PSI - SATURATED STEAM TO 366ºF
600 PSI - NON-SHOCK COLD WATER, OIL OR GAS

NOTE: PRESSURE/TEMPERATURE CHART - PAGE BV-29

MATERIAL LIST

NO.	NAME OF PART	SPECIFICATION
1	BODY	FORGED BRASS (B283, C37700)
2	BODY CAP	BRASS ROD (B16)
	(¾")	FORGED BRASS (B283, C37700)
3	STEM	(1) SPECIAL BRASS (KITZ, "K-METAL")
4	BALL	(2) FORGED BRASS (B283, C37700)
7	GLAND	BRASS ROD (B16)
8	GLAND PACKING	PTFE
9	HANDLE	(3) CARBON STEEL
10	HANDLE NUT	CARBON STEEL
16	SPRING WASHER	CARBON STEEL
19	GASKET	NBR
30	BALL SEATS	PTFE
86	CAP & CHAIN	PP/BRASS

NOTES:
(1) PROPRIETARY DEZINCIFICATION RESISTANT MATERIAL.
(2) CR. PLATING
(3) ELECTROPLATED ZINC WITH PLASTIC COVERING

DIMENSIONS - WEIGHTS - QUANTITIES

d2 SIZE	d	H	D1	L	L1	d1 Max. Min	APPROX. NET WT.	CARTON QTY
½	.59	1.65	3.23	2.93	2.46	.631 .627	52	96
¾	.79	2.01	3.94	3.30	2.79	.881 .877	50	60

SPECIFICATION

Approved valve shall have two piece forged brass body, chrome plated ball, blowout proof stem, PTFE seats/seals, PP or brass cap & chain and full port design. Valves shall be pressure rated to 150 WSP/600 WOG and conform to MSS-SP 110.

KITZ Code No. 68C (AKTAFC) Threaded Ends
69C (CTAFC) Solder Ends

STRAINER
CLASS 150 BRONZE

Y-Pattern • Threaded Cap and Ends
Stainless Steel (304) Punched Screen

CODE # 15 (AKYU)
THREADED

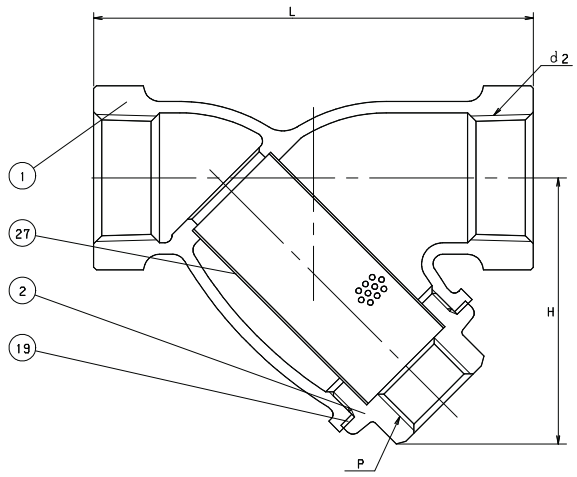

CODE # 16 (CYU)
SOLDER*

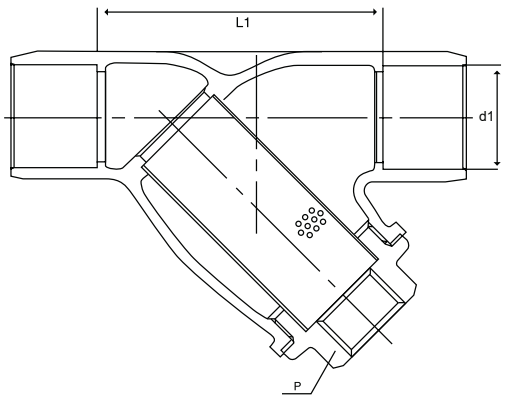

STANDARDS	
END TO END	KITZ
THREADED ENDS	ANSI B1.20.1
SOLDER JOINT ENDS	ANSI B16.18
WALL THICKNESS	KITZ
DESIGN	KITZ

PRESSURE/TEMPERATURE

150 PSI - SATURATED STEAM TO 366ºF
- FLUID TO 406ºF
300 PSI NON-SHOCK COLD WATER, OIL OR GAS

**SEE PRESSURE/TEMPERATURE LIMITATIONS FOR SOLDER JOINT VALVES - PAGE BIV-50.*

MATERIAL LIST

NO.	NAME OF PART	SPECIFICATION
1	BODY	CAST BRONZE (B584, C84400)
2	*CAP	FORGED BRASS (B283, C37700)
19	GASKET	NON-ASBESTOS SHEET
27	SCREEN	STAINLESS STEEL (A167, TYPE 304)

* Cap supplied without plug. Blind cap optionally available.

DIMENSIONS - WEIGHTS - QUANTITIES

d2 SIZE	H	L	P	L1	d1 Max.	d1 Min.	APPROX. NET WT.	CARTON QTY
1/4	1.73	2.76	1/4	–	–	–	0.56	96
3/8	1.73	2.76	1/4	–	.506	.502	0.56	96
1/2	1.93	3.15	1/4	2.15	.631	.627	0.76	80
3/4	2.28	3.94	1/4	2.63	.881	.877	1.29	48
1	2.80	4.53	1/2	3.10	1.132	1.128	1.86	36
1 1/4	3.19	5.31	1/2	3.77	1.382	1.378	2.92	24
1 1/2	3.82	6.30	3/4	4.51	1.633	1.628	4.31	16
2	4.72	7.68	1	5.59	2.133	2.128	7.25	8
2 1/2	5.83	9.06	1 1/4	–	2.633	2.628	13.00	1
3	7.09	9.45	1 1/2	–	3.133	3.128	19.00	1

NOTE: The standard punched screen is approximately 12 mesh screen. Other mesh screens are available (see spare parts in price sheet).

NOTE: NOT INTENDED FOR USE IN A POTABLE WATER SYSTEM - COMPLIANT STATEMENT PROP 65, STATE OF CALIFORNIA

TAG: SECTION 22 05 23 2.8 BUTTERFLY VALVE

"Apollo" Valves

SUBMITTAL SHEET

LEAD FREE

LD141/WD141 Series

General Purpose **Butterfly Valves**

Job Name:	
Job Location:	
Engineer:	
Contractor:	
Tag:	
PO Number:	
Representative:	
Wholesale Distributor:	



DESCRIPTION

The Apollo® LD141/WD141 Series Ductile Iron Butterfly Valves are ideal for use in Industrial and HVAC/Mechanical applications. The WD141 Series is a wafer style valve and the LD141 Series is a companion lug style.

FEATURES

- Compatible with ANSI 125# & 150# Flanges
- ISO 5211 Top Plate Allows Choice of Apollo® Pneumatic Actuators and manual operators
- Conforms to MSS SP-67 & API 609
- LD141 Series Suitable for End of Line Service to Rated Pressure (2" - 12")
- 3" -24" meet performance requirements of AWWA C-504

PERFORMANCE RATING

- Pressure Rating: 2" to 12": 200 psi
- Pressure Rating: 14" to 24": 150 psi

APPROVALS

- NSF/ANSI 372 Lead Free
- CRN 0C12102.8CL

MATERIAL OPTIONS

Body
- Ductile Iron ASTM A536, (65-45-12)

Disc Material
- Aluminum Bronze
- Ductile Iron A536 Nickel Plated
- Stainless Steel, CF8M

Seat Material
- EPDM: -20°F to +250°F Intermittent, 225°F Continuous
- BUNA-N: +10°F to +180°F

Operator
- -0 - None
- -1 - 10 Position Handle
- -2 - Gear Operator (12" handwheels)
- -3 - Infinite Position Handle
- -4 - Locking Handle
- -5 - Gear Operator w/ Chain Wheel
- -7 - Locking Gear Operator
- -8 - Locking Gear Operator w/ Chain Wheel

Provide with nickel plated ductile iron disc

Provide with 10 position lever handle

STANDARD MATERIALS LIST

Part Name	Material
Body	Ductile Iron ASTM A536
Bushings	Glass Reinforced Epoxy Resin
Stem Seal	Buna-N
Shaft	416 SS ASTM A276 Type 416

TORQUE RATING * (INCH - LBS)

Valve Size	Valve Size	Full Rated Pressures (psi)				Flow
In.	mm	ΔP 50	ΔP 100	ΔP 150	ΔP 200	Cv Full Open
2	50	100	106	111	117	115
2.5	65	150	163	176	189	196
3	80	207	220	232	244	302
4	100	290	323	357	390	600
5	125	423	481	540	598	1022
6	150	599	691	783	875	1579
8	200	1060	1183	1307	1430	3136
10	250	1671	1872	2074	2275	5340
12	300	2568	2795	3023	3250	8250
14	350	2640	3070	3500	N/A	11917
16	400	4260	4880	5500	N/A	16388
18	450	6287	7243	8200	N/A	21705
20	500	8360	9180	10000	N/A	27908
24	600	15427	16813	18200	N/A	43116

** Lubricating media service*

WEIGHT

Weight WD141 (lbs.)	Weight LD141 (lbs.)
6	9
8	10
9	11
11	18
15	22
18	26
32	43
47	66
-	102
-	148
-	206
-	277
-	410
-	592

** LEAD FREE: The wetted surfaces of this product shall contain no more than 0.25% lead by weighted average. Complies with Federal Public Law 111-380. ANSI 3rd party approved and listed.*

Apollo Valves / **Conbraco Industries, Inc.**
701 Matthews Mint-Hill Road, Matthews, NC 28105 USA
www.**apollovalves**.com | (704) 841-6000

This specification is provided for reference only. Conbraco Industries Inc. reserves the right to change any portion of this specification without notice and without incurring obligation to make such changes to Conbraco products previously or subsequently sold. Please visit our website @ www.apollovalves.com for the most current information.

AALBERTS INDUSTRIES

"Apollo" Valves

SUBMITTAL SHEET

LEAD FREE

LD141/WD141 Series

General Purpose **Butterfly Valves**

WD MODEL
2" - 12"

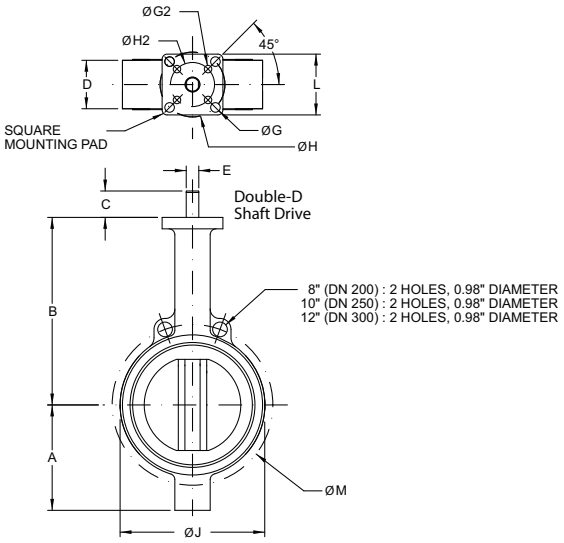

LD MODEL

2" - 12"

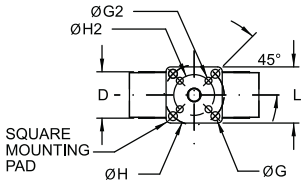

14" - 24"

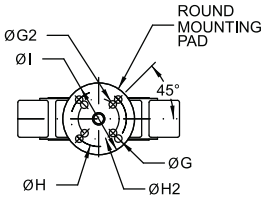

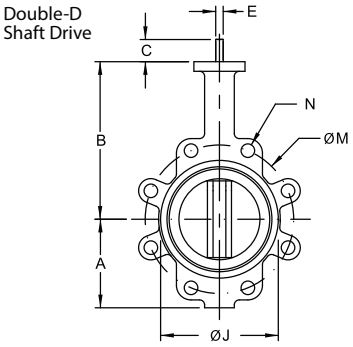

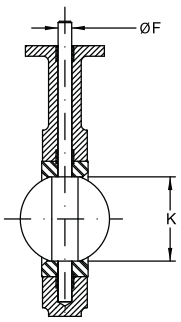

Shaft Drive:
Double-D (14")
Round & Keyed (16" & larger)

DOUBLE-D AND KEYED STEM

Size Inches	Size DN	Dimensions in Inches																	
		A	B	C	D	E	ØF	ØG	ØG2	Key	ØH	ØH2	ØI	ØJ	K	L	M	N (WD)	N (LD)
2	50	3.25	6.375	1.25	1.75	0.394	0.496	0.375	--	--	2.756	--	2.699	4	2.09	1.113	4.75	0.688	.625-11
2.5	65	3.75	6.880	1.25	1.88	0.394	0.496	0.375	--	--	2.756	--	2.699	4.75	2.54	1.706	5.50	0.688	.625-11
3	80	4.00	7.130	1.25	1.88	0.394	0.496	0.375	--	--	2.756	--	2.699	5.13	3.09	2.450	6.00	0.688	.625-11
4	100	4.88	7.880	1.25	2.13	0.472	0.621	0.375	--	--	2.756	--	2.699	6.75	4.09	3.488	7.50	0.688	.625-11
5	125	5.38	8.380	1.25	2.25	0.551	0.745	0.375	--	--	2.756	--	2.699	7.75	4.85	4.296	8.50	0.813	.625-11
6	150	5.88	8.880	1.25	2.25	0.551	0.745	0.375	--	--	2.756	--	2.699	8.63	6.13	5.697	9.50	0.813	.751-10
8	200	7.13	10.250	1.75	2.50	0.669	0.870	0.563	0.438	--	4.921	4.015	4.606	10.56	7.89	7.468	11.75	0.813	.750-10
10	250	8.25	11.500	1.88	2.75	0.866	1.120	0.563	0.438	--	4.921	4.015	4.606	13.06	9.89	9.484	14.25	0.938	.750-10
12	300	9.75	13.250	1.88	3.13	0.945	1.244	0.563	--	--	4.921	--	4.606	16	11.89	11.456	17.00	0.938	.875-9
14*	350	11.00	14.500	1.88	3.13	0.945	1.244	0.563	--	--	4.921	--	Ø5.91	17.13	13.38	13.000	18.75	1.060	.875-9
16*	400	12.00	15.750	2.00	3.50	--	1.313	0.563	--	0.313	4.921	--	Ø5.91	20	15.38	14.970	21.25	1.060	1.00-8
18*	450	14.38	16.630	2.00	4.25	--	1.500	0.813	--	0.375	6.496	--	Ø8.27	21.38	17.38	16.847	22.75	1.250	1.00-8
20*	500	14.63	18.880	2.50	5.25	--	1.625	0.813	--	0.375	6.496	--	Ø8.27	23.31	19.38	18.650	25.00	1.250	1.125-7
24*	600	18.00	22.130	2.75	6.13	--	2.000	0.813	--	0.500	6.496	--	Ø8.27	27.88	23.38	22.558	29.50	1.380	1.125-7

** LD141 Series only*

Apollo Valves / **Conbraco Industries, Inc.**
701 Matthews Mint-Hill Road, Matthews, NC 28105 USA
www.**apollovalves**.com | (704) 841-6000

This specification is provided for reference only. Conbraco Industries Inc. reserves the right to change any portion of this specification without notice and without incurring obligation to make such changes to Conbraco products previously or subsequently sold. Please visit our website @ www.apollovalves.com for the most current information.

AALBERTS INDUSTRIES

REVIEWED BY CONTRACTOR
Kudlik Construction Ltd.
NAME: Sandra Rousseau P.Eng
DATE: Jul 17, 2018

Mécanique Nordique
Plumbing
Heating
Ventillation
mecanique.nordique@hotmail.com

1255 Rue J.A.Bombardier
Lévis, Québec
G7A 2P4
Téléphone: 418-496-1109
Télécopieur: 418-496-3803

IQALUIT WWTP UPGRADE

DRAWING FOR APPROVAL

Ingineer : NUNAMI STANTEC

DRAWING #: AD-023R2

Section	23 05 22	VALVES -BRONZE FOR HEATING
Article	2.1 , 2.2 ,	2.3 , 2.4 , 2.5 , 2.6 , 2.7
Plans	M-603	
Application	: VALVES ,	CHECK VALVES , STRAINER , CBV
Brand	: KITZ ,	TOYO , ARMSTRONG , APOLLO
Model	: Different	
Revised #	: 2	
Supplyer	: Wolseley	
Pages incl.	33	
Date	: **2018-07-17**	
By	: **Mécanique Nordique Inc.**	

STANTEC PROJECT #: 110126045

SUBMITTAL # AD-023R2

This review by Stantec is for general conformance with the design concept of Stantec's design of the:

- ☐ Architectural
- ☐ Structural
- ☑ Mechanical
- ☐ Electrical
- ☐ Other

Stantec

component(s) only and does not mean that Stantec has verified or approves the shop drawing(s). The Contractor remains solely responsible for the shop drawing(s) and this review by Stantec does not relieve the Contractor of the Contractor's responsibility for errors or omissions in the shop drawing(s) or for meeting all requirements of the contract documents. This review does not mean that Stantec approves the detailed design inherent in the shop drawing, responsibility for which shall remain with the Contractor submitting same, nor does this review mean that Stantec accepts any deviation of the shop drawing(s) from the contract documents. The Contractor is responsible for confirming all dimensions and correlating them at the job site, for all construction means, methods and techniques, and for coordination of construction work of all trades, including coordination of all shop drawings.

- ☐ REVIEWED
- ☑ REVIEWED, AS NOTED
- ☐ REVISE AND RESUBMIT
- ☐ NOT REVIEWED

DATE 2018-07-20

BY Brendan Zrum, P.Eng

TAG: SECTION 23 05 23 2.1 BALL VALVE SOLDERED

RWV®

ECO-VALVE

Figure # 5049AB

Low Lead Brass Ball Valve (1/2"-2")

NOTE RED-WHITE = TOYO



Product Features

- 150# WSP / 600# WOG
- Forged Brass Body
- Full Port
- Adjustable Packing
- Solder Ends
- Blow-Out Proof Stem
- MSS-SP-110
- AB1953, NSF-61, NSF-372 Certified

Certified to ANSI/NSF 61

Pressure/Temperature Rating	
600 PSI from 15F to 160 F	150 PSI MAX at 366F

Connection Working Pressure				
Solder used in joints	Working Temp deg. °F	Maximum working pressure (PSI)		
		3/8" - 1"	1-1/4" -2"	2-1/2" - 3"
95-5 Tin Antimony (ASTM B32 grade 95TA)	100	500	400	300
	150	400	350	275
	200	300	250	200
	250	200	175	150

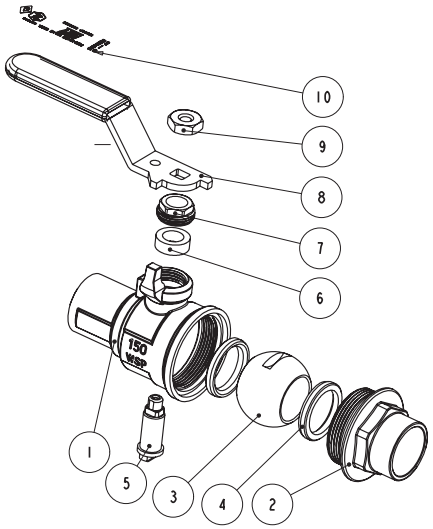

Materials & Specifications

Item	Description	Material	Specification
1	Body	Low Lead Brass	C28500
2	End piece	Low Lead Brass	C28500
3	Ball	Low Lead Brass/Cr Plated	C28500
4	Seat	PTFE	PTFE
5	Stem	Low Lead Brass	C28500
6	Packing	PTFE	PTFE
7	Packing nut	Brass	B124 C37700
8	Handle	Steel/Dc plated	A36 Dacromet
9	Handle nut	Steel/Zn plated	A36
10	Valve info	-	-

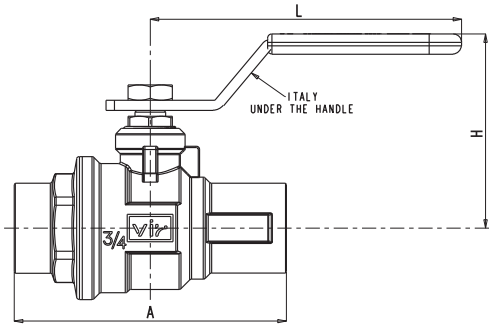

Dimensions, Weights (inches-lbs.) & Valve Data

Size	1/2	3/4	1	1-1/4	1-1/2	2
Ø	0.627-0.631	0.877-0.881	1.128-1.131	1.378-1.381	1.628-1.632	2.128-2.132
A	2.60	3.15	3.31	3.86	4.53	5.51
C	0.51	0.75	0.91	0.97	1.09	1.34
H	2.13	2.24	2.57	2.79	3.28	3.58
L	3.60	3.60	4.98	4.98	5.57	5.57
P	0.59	0.79	0.98	1.26	1.57	1.97
Cv	15	30	60	110	130	360
Wt	0.56	0.79	1.21	2.04	3.02	4.56

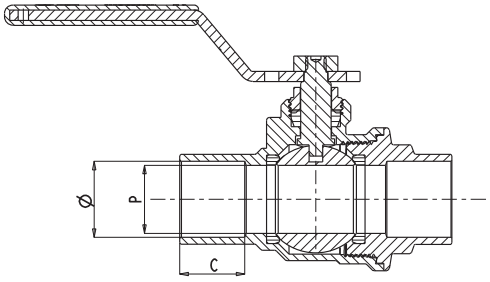

RED-WHITE VALVE CORP.
20600 Regency Lane, Lake Forest, CA 92630
TEL: 949.859.1010 • FAX: 949.859.7200 • www.redwhitevalvecorp.com

TAG: SECTION 23 05 22 2.1 BALL VALVE NPT

Lead Free Brass Full Port Ball Valve

NOTE RED-WHITE = TOYO



HEATING BALL VALVES

Feature

150# WSP / 600# WOG
Lead free brass body
Full port
Adjustable packing
FNPT x FNPT
Threaded ends (ASME B1.20.1-NPT)
Blow-out proof stem
MSS-SP-110
550 psi for UL use (1½" & 2")
CSA ½, 5 & 125 psi (½" - 2")
CSA ½ & 5 psi (2½" & 3")
UL approved (¼" - 2")
FM approved (½" - 2")
AB1953, NSF/ANSI 61 & 372 certified

Meet BAA requirement

NSF/ANSI 61 & 372

Pressure/ Temperature rating	
600 psi from 15 °F to 160 °F	150 psi max. at 366 °F

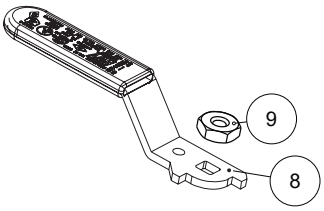

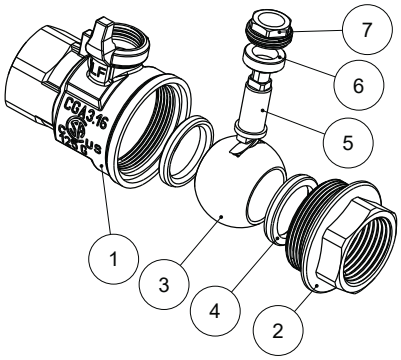

Material

	Part	Material	Specification
1	Body	Lead Free Brass	C28500
2	End piece	Lead Free Brass	C28500
3	Ball	Lead Free Brass / Cr plated	C28500
4	Seat	PTFE	PTFE
5	Stem	Lead Free Brass	C28500
6	Packing	PTFE	PTFE
7	Packing nut	Brass	B124 C37700
8	Handle	Steel / Geomet® plated	A36
9	Handle nut	Steel / Zn plated	A36

Dimension, Cv, Weight

	A [in]	C [in]	H [in]	L [in]	P [in]	Cv	Wt. [lb]
¼"	1.73	0.45	1.55	3.19	0.39	8	0.34
⅜"	1.73	0.45	1.55	3.19	0.39	8	0.32
½"	2.13	0.55	2.13	3.60	0.59	15	0.58
¾"	2.56	0.59	2.26	3.60	0.79	30	0.86
1"	2.92	0.71	2.57	4.98	0.98	60	1.34
1¼"	3.39	0.73	2.79	4.98	1.26	110	2.14
1½"	3.90	0.77	3.28	5.57	1.57	130	3.12
2"	4.45	0.81	3.58	5.57	1.97	360	4.82
2½"	6.02	1.18	4.70	11.07	2.56	450	9.78
3	6.81	1.22	5.15	11.07	3.15	620	13.9
4	7.64	1.32	5.64	11.07	3.94	1200	20.4

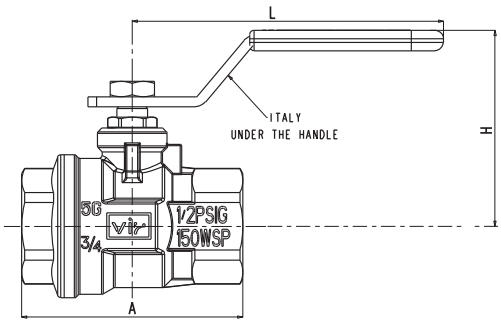

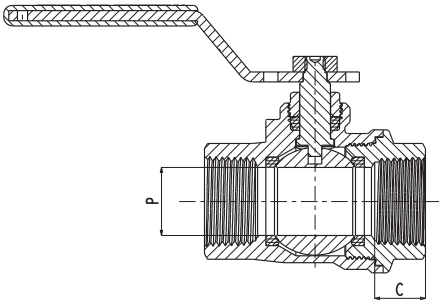

Drawings, photos and data are provided for information only and subject to change without notice. No part of this document may be reproduced, copied, modified or adapted, without the prior written consent of the copyright owner, unless otherwise indicated.
The Drinking Water Act has defined lead free as having the average wetted surface ratio of the fixture to contain less than .25% of lead per volume.
© 2018 Red-White Valve Corp. All Rights Reserved

236AB

Lead Free Brass Threaded Ends Swing Check Valve

TAG: SECTION 23 05 22 2.2 CHECK VALVE

Feature

125# WSP / 200# WOG
Lead free brass body
Lead free brass disc
FNPT x FNPT
Threaded ends (ASME B1.20.1-NPT)
Swing check
"Y" Pattern
MSS-SP-80
AB1953, NSF/ANSI 61 & 372 certified

Meet BAA requirement

C US
NSF/ANSI 61 & 372



Pressure/ Temperature rating	
200 psi from 15 °F to 160 °F	125 psi max. at 366 °F

NOTE : RED-WHITE = TOYO

Material

	Part	Material	Specification
1	Body	Lead Free Brass	ASTM B927 C28500
2	Disc	Lead Free Brass	ASTM B927 C28500
3	Stem	Lead Free Brass	ASTM B927 C28500
4	Screw	Lead Free Brass	ASTM B927 C28500
5	Gasket	PTFE	PTFE
6	Cap	Lead Free Brass	ASTM B927 C28500

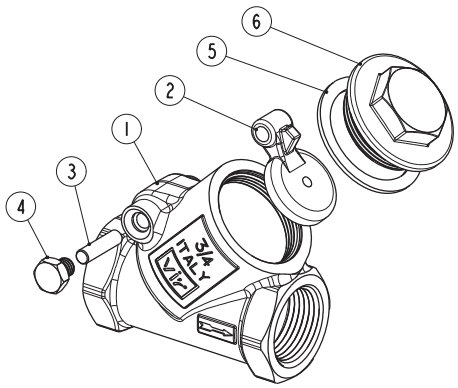

Dimension, Cv, Weight

Size	A [in]	H [in]	P [in]	Cv	Wt. L [lb]
½"	2.21	1.65	0.59	5.33	0.56
¾"	2.76	1.97	0.75	10.5	0.86
1"	3.15	2.28	0.98	19.0	1.28
1¼"	3.78	2.71	1.26	32.8	2.06
1½"	4.33	3.19	1.50	50.6	2.84
2"	5.04	3.86	1.97	88.1	4.46

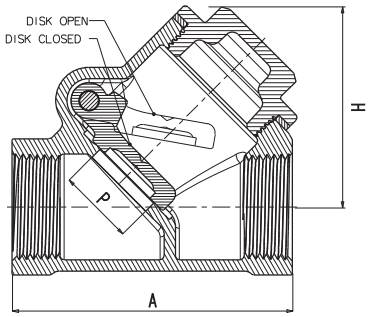

Drawings, photos and data are provided for information only and subject to change without notice. No part of this document may be reproduced, copied, modified or adapted, without the prior written consent of the copyright owner, unless otherwise indicated.
The Drinking Water Act has defined lead free as having the average wetted surface ratio of the fixture to contain less than .25% of lead per volume.
© 2018 Red-White Valve Corp. All Rights Reserved

Figure # 435

Cast Iron Flanged Swing Check Valve (2”-12”)

TAG: SECTION 23 05 22 2.2 CHECK VALVE

Product Features

- 125# WSP / 200# WOG
- Cast Iron Body
- Flanged Ends per ANSI B16.5
- IBBM
- Bolted Cap
- MSS-SP-71



Materials & Specifications

Item	Description	Material	Specification
1	Body	Cast Iron	A126-B
2	Seat Ring	Bronze	B62-C83600
3	Disc Ring	Bronze	B62-C83600
4	Disc	Cast Iron	A126-B
5	Hinge	Cast Steel	A216-WCB
6	Nut	Steel	A563-A
7	Pin	Stainless Steel	304
8	Washer	Stainless Steel	A276-410
9	Hinge Pin	Stainless Steel	304
10	Gasket	Compressed Sheet	Non-asbestos
11	Cover / Cap	Steel	A36
12	Cover Bolt	Steel	A307-B
13	Cover Nut	Steel	A563-A
14	Eye Bolt (6-12”)	Steel	A36
15	Plug	Steel	A307-B
16	Name Plate	Aluminum	B209
17	Stop Bolt	Steel	A307-B
18	Stop Nut	Steel	A563-A

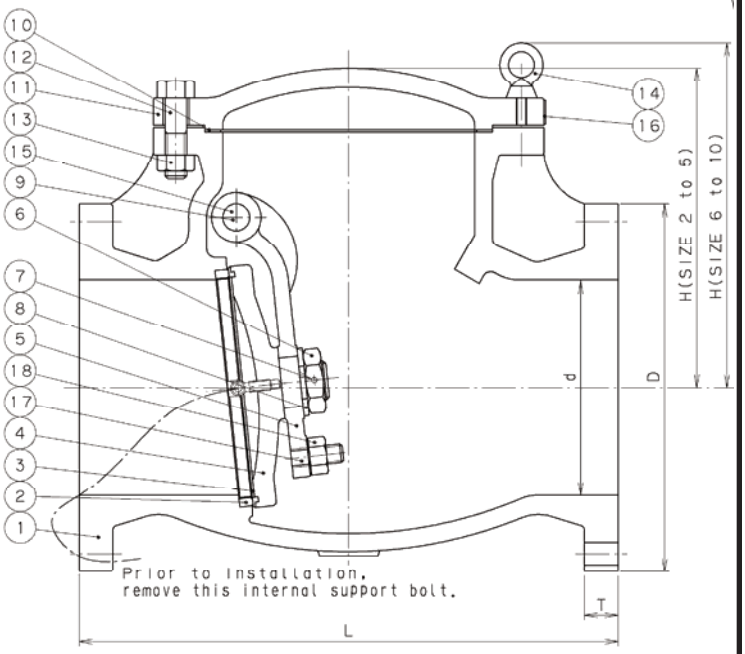

Dimensions, Weights (inches-lbs.) & Valve Data

Size	2	2-1/2	3	4	5	6	8	10	12
C	4.75	5.5	6	7.5	8.5	9.5	11.75	14.25	17
D	6	7	7.5	9	10	11	13.5	16	19
d	2	2.5	3	4	5	6	8	10	12
G	5/8	5/8	5/8	5/8	3/4	3/4	3/4	7/8	7/8
H	6.0	6.38	6.93	8.66	8.9	12.09	12.8	15.12	16.77
h	.75	.75	.75	.75	.88	.88	.88	1	1
L	8	8.5	9.5	11.5	13	14	19.5	24.5	27.5
N = Qty	4	4	4	8	8	8	8	12	12
T	.62	.69	.75	.94	.94	1	1.12	1.19	1.25
Cv	110	143	206	440	575	830	1500	2370	3470
Wt.- lbs.	31	44	55	86	130	154	279	407	595

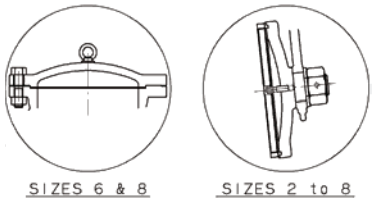

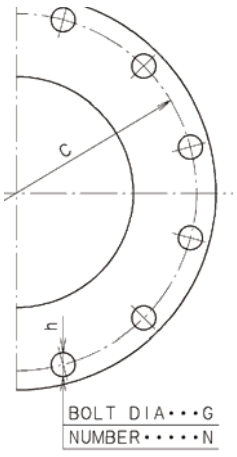

RED-WHITE VALVE CORP. 20600 Regency Lane • Lake Forest, CA 92630
tel: 949.859.1010 • fax: 949.859.7200 • www.redwhitevalvecorp.com

FORGED BRASS BALL VALVE

CAP & CHAIN

Two Piece Body • Full Port

Blowout Proof Stem • Chrome Plated Ball • PTFE Seats and Seals

CODE # 68C (AKTAFC)
THREADED x HOSE

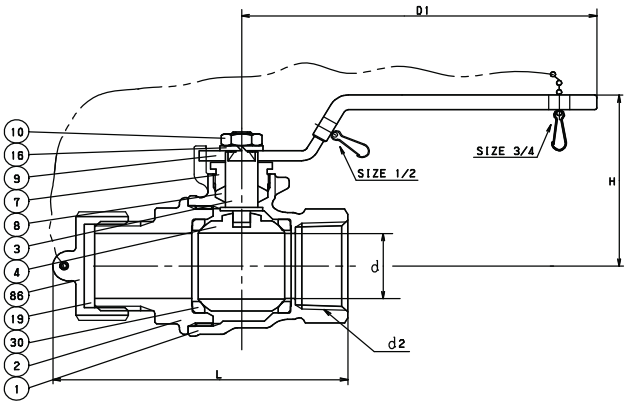

CODE # 69C (CTAFC)
SOLDER* x HOSE

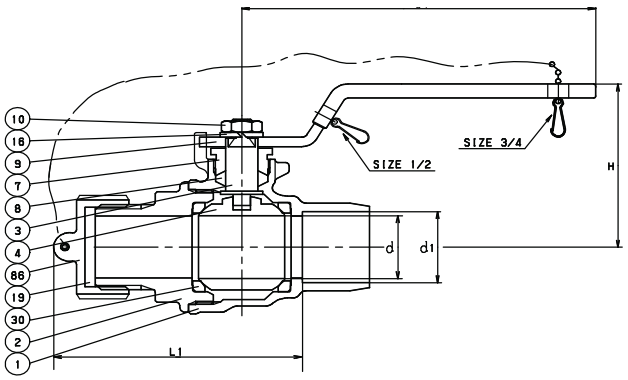

**REFERENCE VALVE INSTALLATION TIPS FOR SOUND SOLDER JOINTS (PAGE BV-66) OR SEE INSTALLATION SHEET PACKAGED WITH VALVE.*

STANDARDS	
END TO END	KITZ
THREADED ENDS	ANSI B1.20.1/ANSI B2.4 ¾ 11.5 NHR
SOLDER JOINT ENDS	ANSI B16.18/ANSI B2.4 ¾ 11.5 NHR
WALL THICKNESS	KITZ
CONFORMS TO MSS-SP 110	

PRESSURE/TEMPERATURE
150 PSI - SATURATED STEAM TO 366ºF
600 PSI - NON-SHOCK COLD WATER, OIL OR GAS

NOTE: PRESSURE/TEMPERATURE CHART - PAGE BV-29

MATERIAL LIST

NO.	NAME OF PART	SPECIFICATION
1	BODY	FORGED BRASS (B283, C37700)
2	BODY CAP	BRASS ROD (B16)
	(¾″)	FORGED BRASS (B283, C37700)
3	STEM	(1) SPECIAL BRASS (KITZ, "K-METAL")
4	BALL	(2) FORGED BRASS (B283, C37700)
7	GLAND	BRASS ROD (B16)
8	GLAND PACKING	PTFE
9	HANDLE	(3) CARBON STEEL
10	HANDLE NUT	CARBON STEEL
16	SPRING WASHER	CARBON STEEL
19	GASKET	NBR
30	BALL SEATS	PTFE
86	CAP & CHAIN	PP/BRASS

NOTES:
(1) PROPRIETARY DEZINCIFICATION RESISTANT MATERIAL.
(2) CR. PLATING
(3) ELECTROPLATED ZINC WITH PLASTIC COVERING

DIMENSIONS - WEIGHTS - QUANTITIES

d2 SIZE	d	H	D1	L	L1	d1 Max. Min	APPROX. NET WT.	CARTON QTY
½	.59	1.65	3.23	2.93	2.46	.631 .627	52	96
¾	.79	2.01	3.94	3.30	2.79	.881 .877	50	60

SPECIFICATION

Approved valve shall have two piece forged brass body, chrome plated ball, blowout proof stem, PTFE seats/seals, PP or brass cap & chain and full port design. Valves shall be pressure rated to 150 WSP/600 WOG and conform to MSS-SP 110.

KITZ Code No. 68C (AKTAFC) Threaded Ends
69C (CTAFC) Solder Ends

SECTION 23 05 22 2.4 RADIATOR GLOBE VALVES

Dahl Brass Radiator Valves
Heavy Pattern - Straight

TDS-1004
Rev July/10
Replaces: TDS-3

For Steam, Forced Heating or Cooling Systems

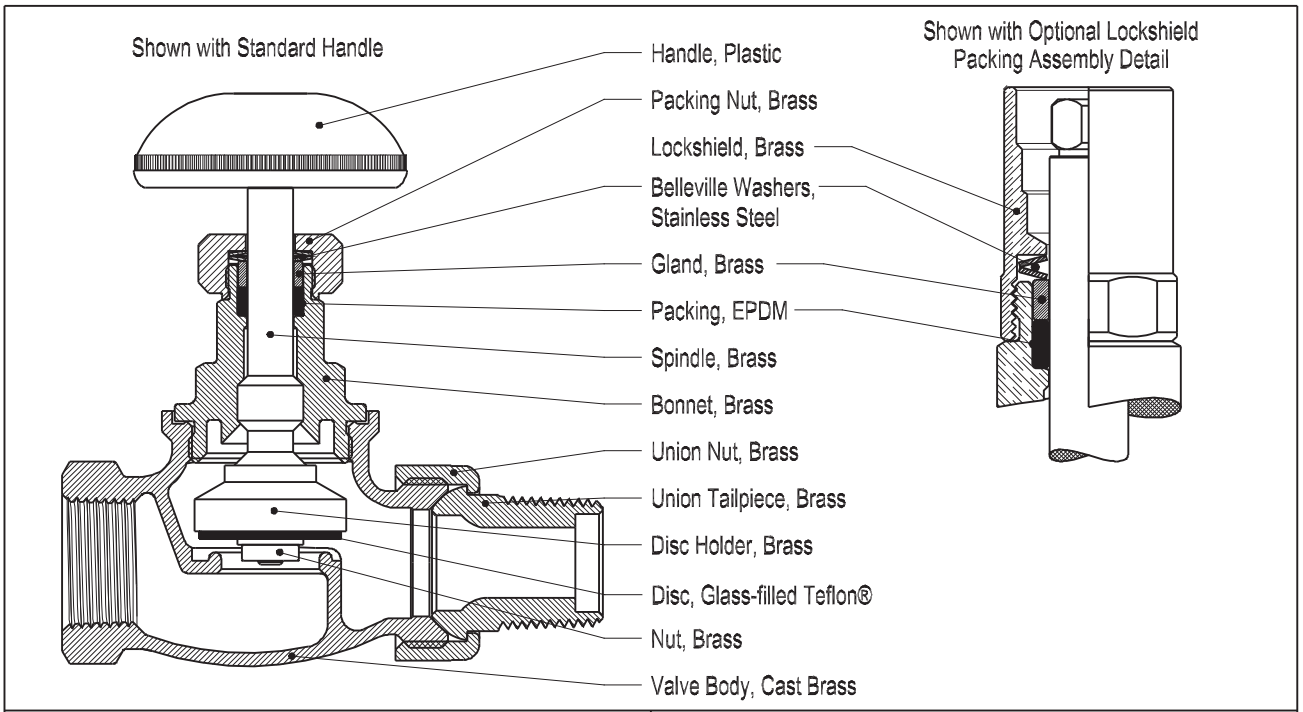

- Self-adjusting, spring loaded packing system
- Low friction packing
- Working pressure/temperature: 250 psi / 250°F
- Designed and manufactured in Canada
- Swivel-type disc holder minimizes wear
- Replaceable disc
- Glass-filled Teflon® disc is good for low pressure steam applications (150 WSP / 300 W), standard on all heavy pattern valves

With Standard Handle

	Size (Inlet x Outlet)	Part Number	C_V (USGPM)	H_{Handle}	L
11042	1/2F x 1/2 Dual Union	110424112	4.7	3-3/4"	3-3/4"
	3/4F x 1/2 Dual Union	110426121	TBA	3-3/4"	4-1/8"
	3/4F x 3/4M Union	110426113	8.2	3-3/4"	4-1/8"
	1 F x 1 M Union	110428114	13.0	4-5/8"	5-1/4"
	1-1/4F x 1-1/4M Union	110429115	21.1	4-3/4"	5-3/4"

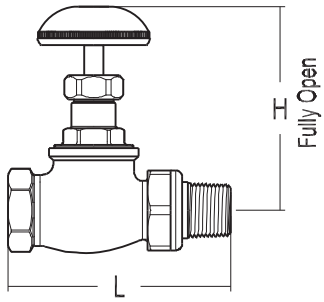

With Tamper Resistant Lockshield

	Size (Inlet x Outlet)	Part Number	C_V (USGPM)	$H_{Lockshield}$	L
11042-LS	1/2F x 1/2 Dual Union	1104241124	4.7	3-1/4"	3-3/4"
	3/4F x 1/2 Dual Union	1104261214	TBA	3-1/4"	4-1/8"
	3/4F x 3/4M Union	1104261134	8.2	3-1/4"	4-1/8"
	1 F x 1 M Union	1104281144	13.0	4-1/8"	5-1/4"
	1-1/4F x 1-1/4M Union	1104291154	21.1	4-1/4"	5-3/4"

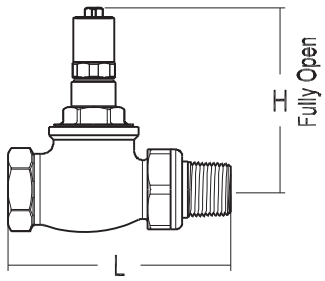

dahl brothers canada limited
2600 S. SHERIDAN WAY, MISSISSAUGA, ON, CANADA L5J 2M4
905-822-2330 CAN 800-268-5355 U.S. 800-268-2363
FAX(905) 855-1450, USA AND CANADA 800-226-1801
www.sales@dahlvalve.com www.dahlvalve.com

We reserve the right to alter prices and/or technical details without notice

Globe Stops

Partition Stops

ELIMINATES THE NEED FOR ACCESS BOXES



#2310-442008





#2330-442008



#9921 Partition Plate

No need to flush cut the tube, the extra deep stainless steel partition plate covers the protruding portion. No tube removal and no marking of the finished wall when cutting tube!

See **Repair Parts and Accessories** for Keys and Plates.

MINIMUM ROUGHING-IN DIMENSIONS	
VALVE SIZE	MIN "M"
1/2"	2-7/8"
3/4"	3-1/8"
Same for angle & straight patterns	

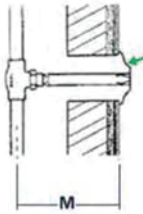

#9921
Partition Plate
Sold Separately

Allow minimum 3" between hot and cold as partition plate has a diameter of 2-1/2"



Pattern	Finish	Description	Part Number
STR	RB	E2310-K 1/2 C x 1/2 C Less Plate	E2310-442008
STR	RB	E2310-K 3/4 C x 3/4 C Less Plate	E2310-662008
ANG	RB	E2330-K 1/2 C x 1/2 C Less Plate	E2330-442008
ANG	RB	E2330-K 3/4 C x 3/4 C Less Plate	E2330-662008

Piggy-Back™ Drain Valves



Pattern	Finish	Description	Part Number
STR	RB	E21616 1/2 C x 1/2 C x Hose L/Cap & Chain	E21616-4
STR	RB	E21616 3/4 C x 3/4 C x Hose L/Cap & Chain	E21616-6
STR	RB	E21616 1/2 C x 1/2 C x Hose W/Cap & Chain	E21616-40000
STR	RB	E21616 3/4 C x 3/4 C x Hose W/Cap & Chain	E21616-60000

Sediment Faucets



Pattern	Finish	Description	Part Number
ANG	RB	E2316 1/2 Dual (C or M) Inlet	E2316-40
ANG	RB	E2316 3/4M Inlet	E2316-61
ANG	RB	E2316 3/4 C Inlet *	E2316-65

Figure # 211

Bronze Threaded Globe Valve

TAG: SECTION 23 05 22 2.5 GLOBE VALVE NPT

Product Features

NOTE RED-WHITE = TOYO

- 125# WSP / 200# WOG
- Bronze Body
- Threaded Ends
- Inserted Bonnet
- Swivel Type Disc
- MSS-SP-80

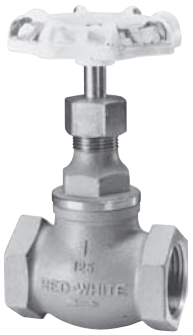

Materials & Specifications

Item	Description	Material	Specification
1	Body	Cast Bronze	B62-C83600
2	Bonnet	1/2" - 4" Bronze	B62-C83600
2	Bonnet	1/4" & 3/8" Brass	B283-C37700
3	Stem	Brass	DR Alloy
4	Disc	2" - 4" Bronze	B62-C83600
4	Disc	1/4" - 1-1/2" Brass	DR Alloy
5	Lock Nut	Brass	B16-C36000
6	Packing Nut	Brass	B283-C37700
7	Gland	Brass	B124-C37700
8	Gland Packing	Plastic/Graphite	T#2996NA
9	Handwheel	3/4" - 4" Alum. Alloy	B85-SC114A
9	Handwheel	1/4" - 1/2" Zinc Alloy	B86-AG40A
10	Wheel Nut	Zinc Plated	A36
11	Name Plate	Aluminum	B209-1100

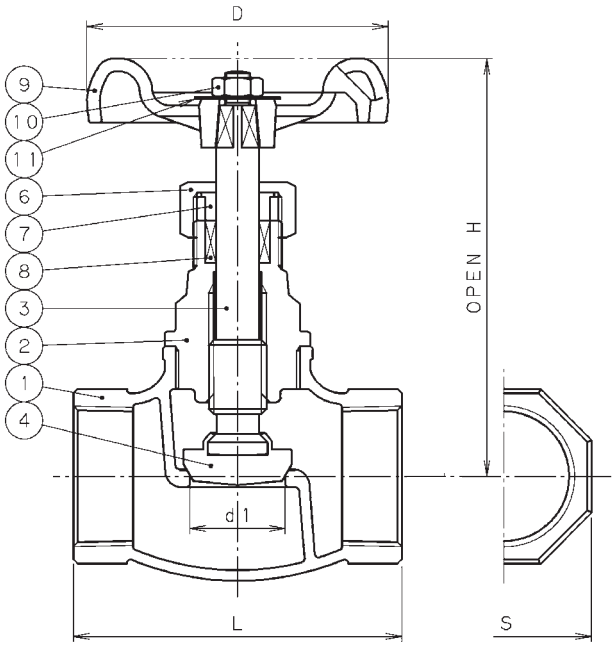

Dimensions & Weights (inches-lbs.)

Size	1/4	3/8	1/2	3/4	1	1-1/4	1-1/2	2	2-1/2	3
D	1.89	2.17	2.17	2.48	2.76	3.15	3.54	3.94	4.92	5.51
d1	.39	.47	.59	.79	.98	1.26	1.58	1.97	2.56	3.15
H	2.64	2.91	3.03	3.5	4.33	5.16	5.67	6.5	8.09	8.74
L	1.65	1.81	2.17	2.56	2.99	3.35	3.86	4.53	5.59	6.5
S	.79	.95	1.1	1.38	1.61	1.97	2.24	2.76	3.47	4.09
Cv	1.1	2	3.5	6.5	12	21	30	49	81	126
Wt.- lbs.	.40	.49	.64	.95	1.48	2.27	3.18	5.05	9.04	14.11

Sizes 2" & 2-1/2"

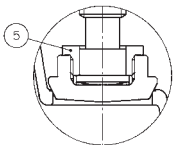

Sizes 3" & 4"

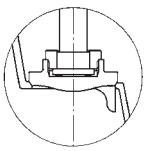

RED-WHITE VALVE CORP. 20600 Regency Lane • Lake Forest, CA 92630
tel: 949.859.1010 • fax: 949.859.7200 • www.redwhitevalvecorp.com

TAG: SECTION 23 05 22 2.6 STRAINERS

RWV®

ECO-VALVE

Figure # 380AB

Low Lead Brass Threaded Y-strainer

NOTE: RED-WHITE = TOYO

Product Features

- 125# WSP / 200# WOG
- Low Lead Brass Body
- Threaded Ends
- Stainless Steel Mesh Screen
- Threaded Cap with Clean Out Plug

* NSF 61-G & NSF 372 Certified

Certified to ANSI/NSF 61

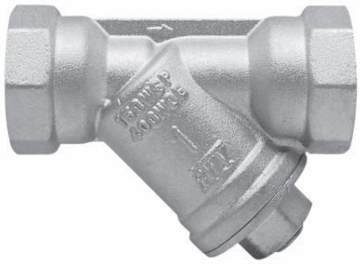

Materials & Specifications

Item	Description	Material	Specification
1	Body	Low Lead Brass	UNS C28500
2	Strainer	Stainless Steel	SS 304
3	Gasket	PTFE	PTFE
4	Cap	Low Lead Brass	UNS C28500
5	Plug	Low Lead Brass	UNS C28500

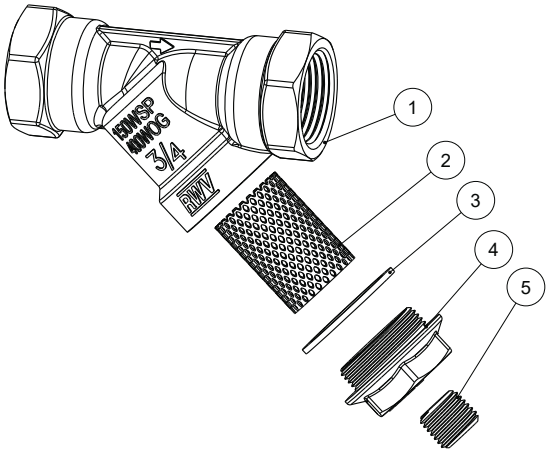

Dimensions, Weights (inches-lbs.) & Valve Data

Size	1/2	3/4	1	1-1/4	1-1/2	2
A	2.76	3.23	3.64	4.11	4.69	5.28
H	2.13	2.36	2.64	3.50	4.13	4.74
P	0.59	0.67	0.79	1.26	1.57	1.97
C	0.61	0.75	0.75	0.77	0.77	0.83
Wt	0.46	0.65	0.95	1.30	1.98	2.69

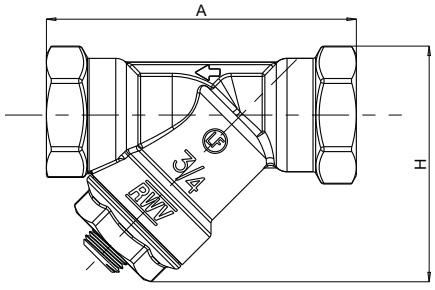

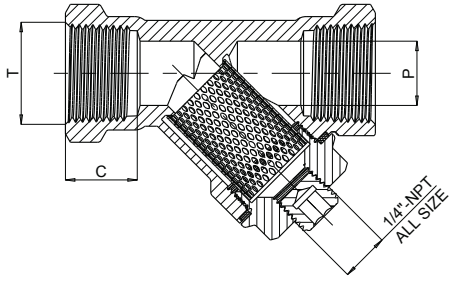

RED-WHITE VALVE CORP.
20600 Regency Lane, Lake Forest, CA 92630
TEL: 949.859.1010 • FAX: 949.859.7200 • www.redwhitevalvecorp.com

Feature

TAG: SECTION 23 05 22 2.6 STRAINERS

125# WSP
200# WOG
Iron body
Flanged ends per ANSI B16.5
SS304 perforated screen
Bolted cap with clean out plug
20 MESH wire screen option available
(Wire screen is supported by perforated screen)



Material

	Part	Material	Specification
1	Body	Cast Iron / Ductile Iron[1]	A126-B / A536[1]
2	Screen	Stainless Steel	SS304
3	Bonnet	Cast Iron / Ductile Iron[1]	A126-B / A536[1]
4	Plug	Steel	-
5	Cap Bolt	Steel	-
6	Gasket	EPDM	-

[1] Ductile iron A536 for 8" and above

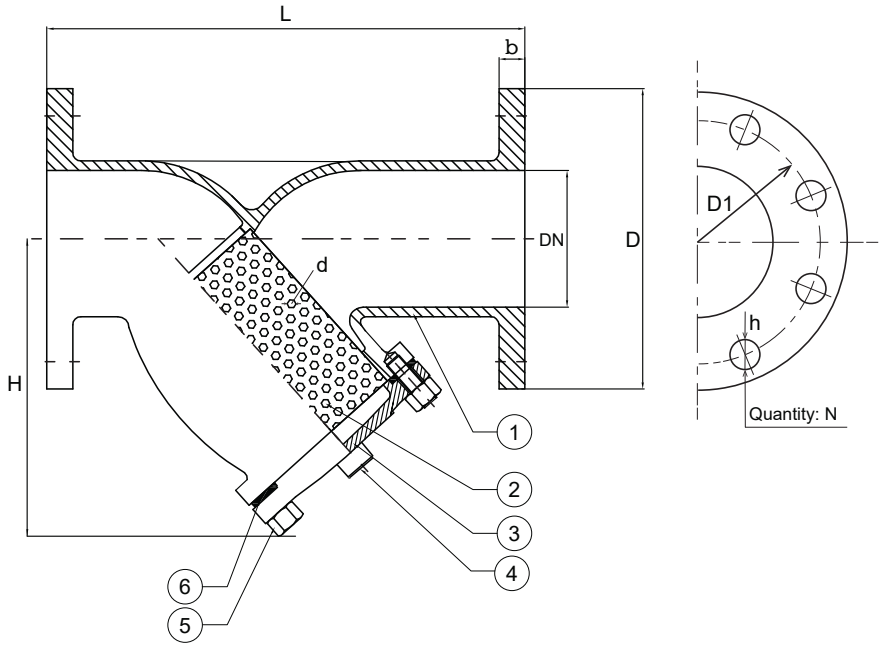

Dimension, Weight

Size DN	D [in]	D1 [in]	H [in]	L [in]	b [in]	d [in]	N - h [in]	Clean out [in]	Cv	Wt. [lb]
2"	5.98	4.76	4.92	8.86	0.71	0.079	4 - 0.75	1	52	19.8
2½"	7.01	5.51	5.91	10.75	0.71	0.079	4 - 0.75	1	80	23.4
3"	7.52	5.98	6.89	11.50	0.79	0.079	4 - 0.75	1	116	32.4
→ 4"	9.02	3.58	7.68	13.86	0.79	0.079	8 - 0.75	1¼	205	46.2
5"	10.00	8.50	9.25	16.54	0.87	0.118	8 - 0.88	1¼	325	65.0
6	10.98	9.49	10.83	18.50	0.94	0.118	8 - 0.88	1½	465	91.8
8"	13.50	11.77	13.78	21.38	0.94	0.197	8 - 0.88	1½	845	131
10"	15.98	14.25	16.54	25.98	1.02	0.197	12 - 1.00	1½	1350	205
12"	19.02	17.01	19.29	30.00	1.02	0.197	12 - 1.00	1½	2080	269

Drawings, photos and data are provided for information only and subject to change without notice. No part of this document may be reproduced, copied, modified or adapted, without the prior written consent of the copyright owner, unless otherwise indicated.
© 2018 Red-White Valve Corp. All Rights Reserved

Balancing Valves
TA Series 786/787/788/789 and Series 78K

08.16



Product Description:

Tour & Andersson calibrated balancing valves offer a reliable, simple and cost effective way to measure and balance all flow rates. Full throttling range is achieved by 4, 8, 12, 16, 20 or 22 full turns of the handwheel, enabling a precise setting. This high degree of accurate adjustment means that the system can be balanced precisely.

The actual pressure drops in heating and cooling systems are difficult to establish by calculation because water flows vary from design flows. They can be corrected easily by regulating the desired water flow with Tour & Andersson globe style balancing valves. By measuring the pressure drop across measuring ports at a particular handwheel setting, the water flow for the valve size can be read easily from the appropriate pressure drop graph or flow balancing wheel. If the flow does not conform with that specified, adjust the valve and repeat the measuring procedure until the correct flow has been obtained.

NOTE: All Tour & Andersson balancing valves include a concealed memory feature with a locking tamper-proof setting.

Series 78K and TA Series 786 and 787 valves have an Ametal® body.

TA Series 788 and 789 balancing valves have ductile iron bodies and Ametal or ductile iron trim, depending on size. Test ports feature self-sealing construction for insertion-type pressure or temperature probes.

All valves are rated from –4°F/–20°C to +250°F/+120°C. Service will also be governed by the connecting coupling gasket ratings for grooved and flanged valves.

Insulation kits are available for ½ – 6"/15 – 150 mm sizes for Series 78K and TA Series 786, 787, 788 and 789 balancing valves.

Job/Owner

System No.	
Location	

Contractor

Submitted By	
Date	

Engineer

Spec Section	
Paragraph	
Approved	
Date	

08.16 0930 Rev Q Updated 05/2014 © 2014 Victaulic Company. All rights reserved.

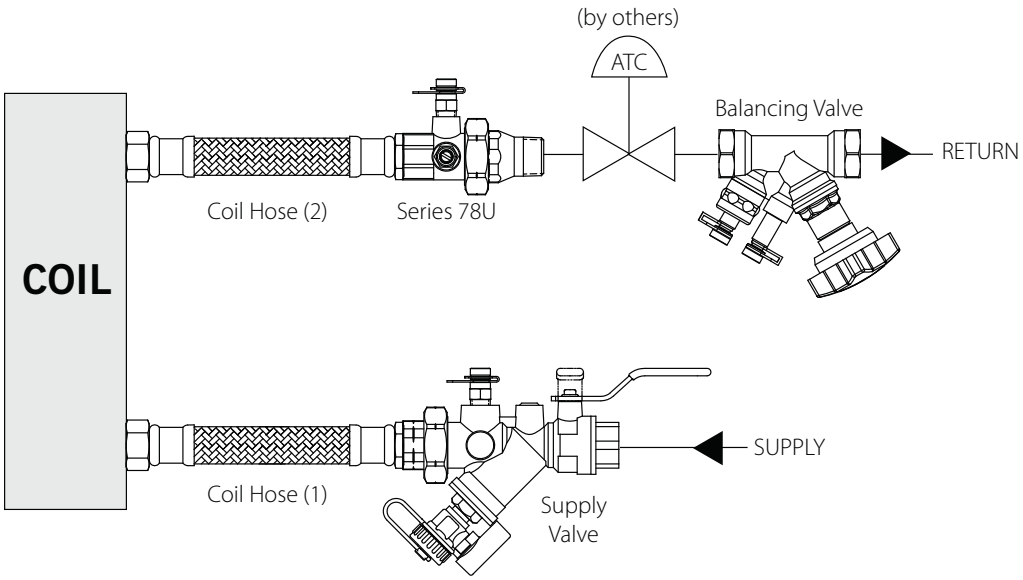

Victaulic Series 799/79V KOIL-KIT™ Coil Pack
Note: TA Series 787 shown, other options available.

Balancing valves can be ordered individually or as a component of the Series 799, 79V, 79B, or 79A KOIL-KIT Coil Pack. See the Series 799/79V/79B/79A Contractor Order Form (A) (publication SF-33) for help ordering your Victaulic KOILKIT Coil Pack.

Victaulic KOIL-KIT Coil Packs provide a simplified, quality coil installation while ensuring optimal hydronic systems design requirements are met. The Series 799/79V is suitable for a variety of hot and cold water applications including treated and untreated water systems.

The Victaulic KOIL-KIT Coil Pack consists of the following components: Series 78Y Y-Strainer/Ball Valve or Series 78T Ball Valve Union Combination, two Coil Hoses, a Series 78U Union Port Fitting and a TA balancing valve. There are two options when ordering a Victaulic KOIL-KIT Coil Pack: Series 799 KOIL-KIT Coil Pack or Series 79V KOIL-KIT Coil Pack with ATC Valve.

The Series 799 and Series 79V comes standard with the components listed above. Additionally, the Series 79V includes the option to have the ATC valve of your choosing assembled and shipped with the Victaulic KOIL-KIT Coil Pack. Please note that when ordering a Series 79V, Victaulic offers one balancing valve, the Series 78K. Specify either Series 799 or Series 79V when ordering.

The Series 79B and Series 79A come standard with the components listed above, however these two packages also include the Bypass Option. When choosing a Victaulic KOIL-KIT Coil Pack with a Bypass Option, the following components are available as options: Series 78Y with Bypass Tee or Series 78T with Bypass Tee, a third coil hose, and a bypass valve. (Bypass valve options consist of Series 78Y, 78T, 78K, 786, 787).

The Series 79A includes the Bypass Option and the option to have the ATC valve of your choosing assembled and shipped with the Victaulic KOIL-KIT Coil Pack.

For added convenience, when coil hoses are ordered as a component of the Series 799 or 79V KOIL-KIT Coil Pack, all hoses can be provided pre-connected to the Series 78Y or 78T on the supply side and the Series 78U on the return side (specify connection preference when ordering).

For information on Victaulic KOIL-KIT Coil Packs in ½ – 2"/15 – 50 mm sizes, refer to publication 08.30.

For information on Victaulic KOIL-KITS for air handling units in 2 ½ – 6"/65 – 150 mm sizes, refer to publication 08.35.

 © 2014 Victaulic Company. All rights reserved.

Material Specifications:

Balancing Valves

Body:

Series 78K and TA Series 786, 787: Ametal, (pressure die cast, nonporous copper alloy)

TA Series 788, 789: Ductile iron, ASTM A536 Grade 60-40-18 (BS Grade 400/15)

Body coating:

TA Series 788, 789: 2 ½, 3, 4" – Epoxy resin coated

5 – 16" – painted

Trim: (Bonnet, Stem and Restriction Cone)

Series 78K and TA Series 786, 787: Ametal

TA Series 788, 789:

Bonnet – 2 ½ – 6" – Ametal

Bonnet – 8 – 16" – Ductile Iron

Stem: Ametal

Restriction Cone: Ametal

Union:

Series 78K: Brass with EPDM o-ring

Tailpiece & adapter:

Series 78K: DZR Brass

Seat:

Series 78K, and TA Series 786, 787: Ametal

TA Series 788, 789: Ductile Iron

Seat seal:

Series 78K and TA Series, 786, 787, 788, 789: EPDM

Stem seals:

EPDM

Probe seals:

EPDM

Handwheel:

Series 78K and TA Series 786, 787 – Red Polyamide plastic

TA Series 788, 789: 2 ½ – 6" – Red Polyamide plastic

8 – 16" – Aluminum

Optional Equipment:

☐ TA Series 786, 787: Drain kit-Ametal

☐ TA Series 786, 787: Insulation Kit-Polyurethane.

Also available on TA Series 789 2 ½ – 6" sizes.

Allen wrench sizes:

3 mm memory ½ – 2" TA Series 786, 788 valves

5 mm memory 2 ½ – 12" TA Series 788 & 2 ½ – 6" TA Series 789 valves

8 mm memory 8 – 16" TA Series 789 valves

5 mm drain kit ½ – 2" TA Series 786 valves

 © 2014 Victaulic Company. All rights reserved.

Comparison of balancing valve throttling characteristics

This curve illustrates the advantage of the four (4) turn adjustment available with Tour & Andersson balancing valves (½ – 2"/15 – 50 mm). Valves 2 ½"/65 mm) and larger have 8, 12 or 16 turns.

A 90° fully open to closed valve requires just a 12° change in adjustment to equal 30% change of the flow.

Tour & Andersson balancing valves would require a 408° change in adjustment to equal the same 30% change in the flow.

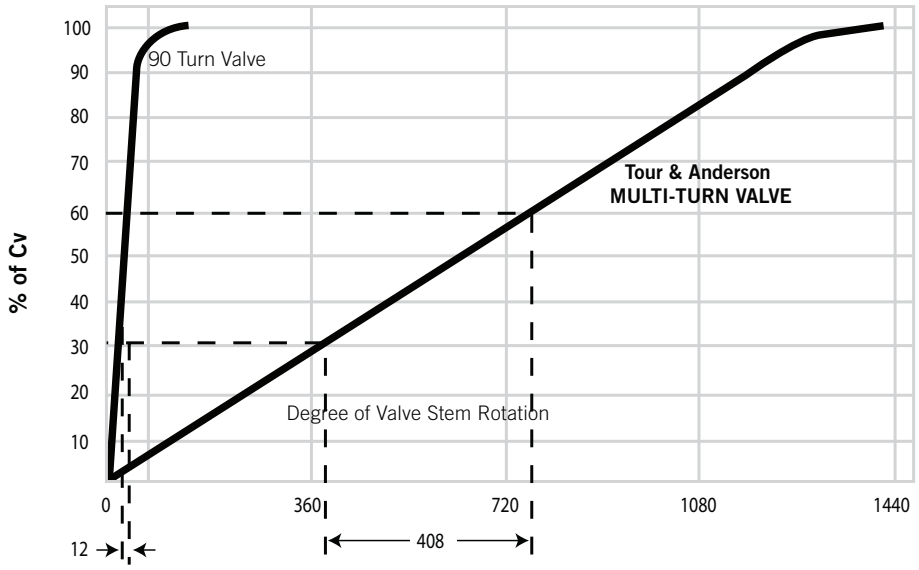

 © 2014 Victaulic Company. All rights reserved.

Dimensions:

Balancing Valve

TA Series 786 Solder End

TA Series 787 Female Threaded End

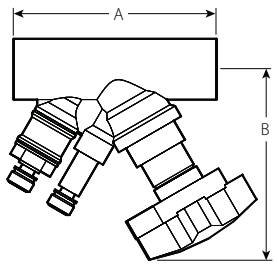

TA Series 786
½–2"/15–50 mm sizes

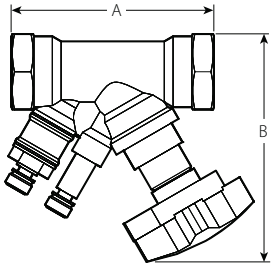

TA Series 787
½–2"/15–50 mm sizes

Size		TA Series 786 Solder End (300 psi/2065 kPa) Balancing Valve			TA Series 787 NPT (Female) Threaded End (300 psi/2065 kPa) Balancing Valve		
Nominal Size inches mm	**Actual Outside Diameter** inches mm	**A End to End** inches mm	**B Center to Top** inches mm	**Approx. Weight Each** Lbs. kg	**A End to End** inches mm	**B Center to Top** inches mm	**Approx. Weight Each** Lbs. kg
½ 15	0.840 21.3	3.50 89	4.00 102	1.4 0.6	3.50 89	4.00 102	1.5 0.7
¾ 20	1.050 26.7	3.81 97	4.00 102	1.4 0.6	3.81 97	4.00 102	1.6 0.7
1 25	1.315 33.7	4.31 110	4.50 114	1.9 0.9	4.31 110	4.50 114	2.0 0.9
1 ¼ 32	1.660 42.4	4.88 124	4.31 110	2.4 1.1	4.88 124	4.31 110	2.6 1.2
1 ½ 40	1.900 48.3	5.13 130	4.75 121	3.1 1.4	5.13 130	4.75 121	3.3 1.5
2 50	2.375 60.3	6.13 156	4.75 121	4.5 2.0	6.13 156	4.75 121	5.0 2.3

 © 2014 Victaulic Company. All rights reserved.

Valve Selection Guide:

Size		Flow Data for TA Series 786 / 787 / 78K		
Nominal Size inches mm	**Actual Outside Diameter** inches mm	**Absolute Min. Flow** GPM LPM	**Nominal Range of Flow** GPM LPM	**Absolute Max. Flow** GPM LPM
½ 15	0.840 21.3	0.1 0.5	0.6 – 2.8 2.3 – 10.6	8.6 32.6
¾ 20	1.050 26.7	0.4 1.5	2.0 – 6.0 7.6 – 22.7	20.0 76.0
1 25	1.315 33.7	0.5 1.7	3.9 – 10.0 14.8 – 37.9	30.0 114.0
1 ¼ 32	1.660 42.4	0.9 3.3	5.0 – 15.0 18.9 – 56.8	48.0 182.0
1 ½ 40	1.900 48.3	1.3 4.9	6.6 – 20.0 25.0 – 75.7	66.0 250.0
2 50	2.375 60.3	2.0 7.6	12.6 – 36.0 47.7 – 136.0	110.0 416.0

Important Notes:

Balancing valves should be sized in accordance with the GPM/LPM flows (and not in relation to pipeline size). Sizing balancing valves based on the minimum or maximum flow rates is not recommended. Valves should be sized using the nominal flow rate only. The Minimum Flow is calculated from the minimum open setting of the valve and a minimum pressure drop 1 Ft. WG (= 3 kPa). The Nominal Flow is calculated from the maximum open setting of the valve and the minimum recommended pressure drop, 2 Ft. WG (= 6 kPa). The Maximum Flow is calculated from the maximum open setting of the valve and the maximum pressure drop, 20 Ft. WG (= 60 kPa). A computer program, TA-Select, is available for calculation of valve handwheel pre-set position and other applications.

Note: For information regarding Allen Wrench sizes see the Material Specifications section on page 3..

Measuring Accuracy:

The hand wheel zero position is calibrated and must not be changed. Valves have an accuracy of flow measurement of 2% to 3% when used within their recommended flow range and installed in accordance with the figure below.

Note: For the most accurate results, a Series 734 TA SCOPE or Series 73M CMI should be used. However, any differential pressure meter may be used.

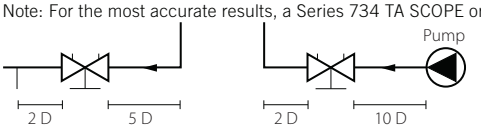

The illustration relates to the accuracy of differential pressure measurement and is not an installation requirement.

 © 2014 Victaulic Company. All rights reserved.

C_V Values for various handle settings

Series 78K and TA Series 786/787

The values below or the graph on page 16 may be used when calculating and sizing a piping system.

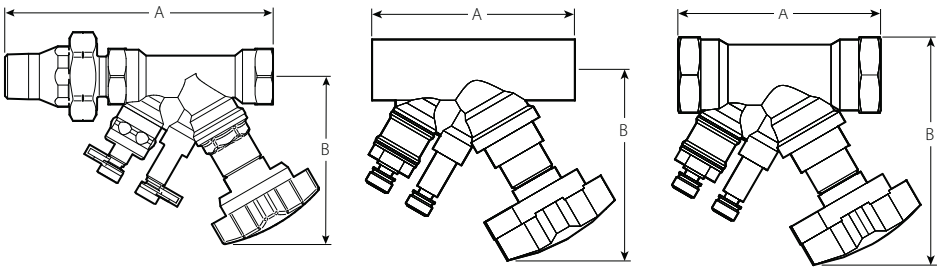

Series 78K TA Series 786 TA Series 787

Style	C_V Values for Sizes listed below [1]					
No. of Turns	½"	¾"	1"	1 ¼"	1 ½"	2"
0.50	0.15	0.59	0.70	1.32	2.03	2.97
1.00	0.25	0.88	1.19	2.20	3.83	4.87
1.50	0.36	1.38	2.44	3.60	5.34	8.35
2.00	0.66	2.20	4.20	5.40	7.08	13.60
2.50	1.02	3.24	6.15	8.24	10.20	18.80
3.00	1.60	4.49	8.00	11.00	14.60	24.90
3.50	2.30	5.51	9.28	13.70	18.60	30.70
4.00 [2]	2.92	6.61	10.09	16.50	22.30	38.00

1 C_v = GPM at a ΔP of 1 psi/7 kPa) through the valve at any given setting.

1 psi = 2.31 ft. of H_2O

2 Full open valve.

 © 2014 Victaulic Company. All rights reserved.

Balancing Valve

Series 78K Male and Female

Optional tailpieces are available for double reductions, or for changing end configurations from sweat to threaded or threaded to sweat. If needed, specify tailpiece option when ordering.

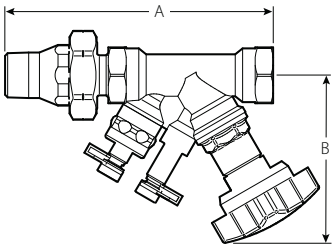

Series 78K
Typical ½–2"/15–50 mm sizes

Nominal Size inches mm			Series 78K Male x Female (300 psi/ 2065 kPa) Balancing Valve		
			A End to End inches mm	B Center to End inches mm	Approx. Weight Each Lbs. kg
MPT Union		FPT Valve			
½ 15	x	½ 15	5.75 146	4.00 102	1.7 0.8
	x	¾ 20	5.94 151	4.00 102	1.8 0.8
	x	1 25	6.27 159	4.50 114	2.7 1.2
	x	1 ¼ 32	7.37 187	4.72 120	4.1 1.9
¾ 20	x	¾ 20	5.99 152	4.00 102	2.3 1
	x	1 25	6.81 173	4.50 114	2.2 1.0
	x	1 ½ 40	7.66 195	4.75 121	5.0 2.3
1 25	x	1 25	7.70 186	5.30 135	4.02 1.8
	x	1 ¼ 32	7.83 199	4.31 109	2.8 1.3
	x	1 ½ 40	7.66 195	4.75 121	5.2 2.4
	x	2 50	8.91 226	4.75 121	7.3 3.3
1 ¼ 32	x	1 ¼ 32	8.18 208	4.72 120	5.52 2.5
	x	1 ½ 40	8.21 209	4.75 121	3.6 1.6
	x	2 50	8.91 226	4.75 121	7.5 3.4
1 ½ 40	x	1 ½ 40	9.00 229	4.75 121	7.16 3.2
	x	2 50	9.02 229	4.75 121	5.3 2.4
2 50	x	2 50	8.86 2.25	4.75 121	7.19 3.3

 © 2014 Victaulic Company. All rights reserved.

Balancing Valve

TA Series 788 Flanged End
(Class 150 RF, ASME/ANSI B16.42)

TA Series 789 Grooved End

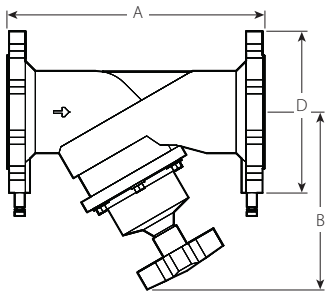

TA Series 788
Typical 2½–16"/65–400 mm sizes

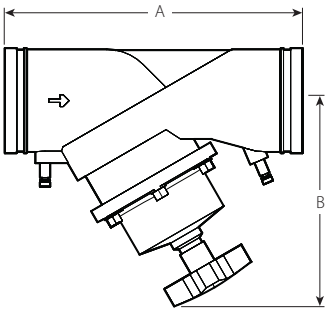

TA Series 789
Typical 2½–12"/65–300 mm sizes

Size		TA Series 788 Flanged End (250 psi/1720 kPa) Balancing Valve			TA Series 789 Grooved End (350 psi/2400 kPa) Balancing Valve		
Nominal Size inches mm	**Actual Outside Diameter** inches mm	**A** **End to End** inches mm	**B** **Center to Top** inches mm	**Approx. Weight Each** Lbs. kg	**A** **End to End** inches mm	**B** **Center to Top** inches mm	**Approx. Weight Each** Lbs. kg
2½ 65	2.875 73.0	11.38 289	8.00 203	24.0 10.9	11.38 289	8.00 203	14.0 6.4
3 80	3.500 88.9	12.25 311	8.63 219	31.0 14.1	12.25 311	8.63 219	20.0 9.1
4 100	4.500 114.3	13.75 350	9.44 240	43.0 19.6	13.75 350	9.44 240	31.0 14.1
5 125	5.563 141.3	15.75 400	10.88 276	62.0 28.5	15.75 400	10.88 276	50.0 22.7
6 150	6.625 168.3	18.88 480	11.25 286	82.0 37.5	18.88 480	11.25 286	69.0 31.3
8 200	8.625 219.1	23.63 600	17.00 432	168.0 76.5	23.63 600	17.00 432	140.0 63.7
10 250	10.750 273.0	28.75 730	17.75 451	270.0 122.9	28.75 730	17.75 451	202.0 91.9
12 300	12.750 323.9	33.50 851	19.00 483	360.0 163.9	33.50 851	19.00 483	280.0 127.4
14 350	14.00 355.6	38.60 980	23.00 584	655 297	–	–	–
16 400	16.00 406.4	43.30 1100	25.20 640	895 406	–	–	–

 © 2014 Victaulic Company. All rights reserved.

Balancing Valve

TA Series 788 Flanged End
(Class 150 RF, ASME/ANSI B16.42)

TA Series 789 Grooved End

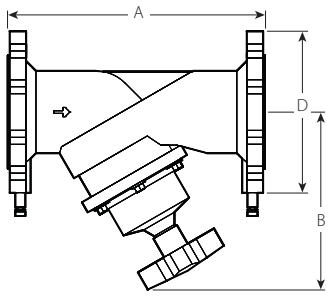

TA Series 788
Typical 2½–16"/65–400 mm sizes

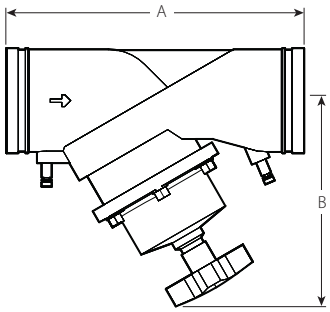

TA Series 789
Typical 2½–12"/65–300 mm sizes

Valve Selection Guide:

Size		Flow Data for TA Series 788 & 789		
Nominal Size inches mm	**Actual Outside Diameter** inches mm	**Absolute Min. Flow** GPM LPM	**Nominal Range of Flow** GPM LPM	**Absolute Max. Flow** GPM LPM
2½ 65	2.875 73.0	1.4 5.3	38.0 – 100.0 144.0 – 379.0	290.0 1097.7
3 80	3.500 88.9	1.5 5.7	31.0 – 130.0 117.0 – 493.0	410.0 1551.9
4 100	4.500 114.3	1.9 7.2	68.0 – 200.0 257.0 – 757.0	650.0 2460.3
5 125	5.563 141.3	4.2 15.9	90.0 – 320.0 341.0 – 1211.0	1020.0 3860.7
6 150	6.625 168.3	5.0 18.9	182.0 – 450.0 689.0 – 1703.0	1430.0 5412.6
8 200	8.625 219.1	30.0 113.6	367.0 – 820.0 1389.0 – 3104.0	2600.0 9841.0
10 250	10.750 273.0	70.0 265.0	540.0 – 1300.0 2044.0 – 4921.0	4040.0 15291.4
12 300	12.750 323.9	115.0 435.3	960.0 – 1500.0 3634.0 – 5678.0	4950.0 18735.8
14 [3] 350	14.00 355.6	83.0 314.0	1020.0 – 2700.0 3861.0 – 10220.0	7414.0 28062.0
16 [3] 400	16.00 406.4	95.0 360.0	1330.0 – 3400.0 5034.0 – 12869.0	9371.0 35469.0

3 Only the TA Series 788 Flanged End Balancing Valves is available in 14-16" / 350-400mm sizes

Important Notes (See page 5 for Balancing Accuracy):

Balancing valves should be sized in accordance with the GPM/LPM flows (and not in relation to pipeline size). Sizing balancing valves based on the minimum or maximum flow rates is not recommended. Valves should be sized using the nominal flow rate only. The Minimum Flow is calculated from the minimum open setting of the valve and a minimum pressure drop 1 Ft. WG (= 3 kPa). The Nominal Flow is calculated from the maximum open setting of the valve and the minimum recommended pressure drop, 2 Ft. WG (= 6 kPa). The Maximum Flow is calculated from the maximum open setting of the valve and the maximum pressure drop, 20 Ft. WG (= 60 kPa).A computer program, TA-Select, is available for calculation of valve handwheel pre-set position and other applications.

Note: For information regarding Allen Wrench sizes see the Material Specifications section on page 3.

Note: For the most accurate results, a Series 734 TA SCOPE or Series 73M CMI should be used. However, any differential pressure meter may be used.

 © 2014 Victaulic Company. All rights reserved.



Link Differential Pressure Sensor

TA Series 736

Provides connection between a building's heating and cooling and building's monitoring system (BMS).

Continuously measures the flow and differential pressure through and across the Tour & Andersson balancing valves.

Measurement probes provided for direct connection to the measurement points on all TA Series 786, 787, 788, and 789 balancing valves.



TA Select Computer Program

TA Select helps you choose the right balancing valve, taking the desired flow rate and pressure drop into consideration. The software will advise the correct combination of valve, handwheel position and pipe size to correctly balance the system. A sophisticated viscosity correction procedure displays the density, viscosity, specific heat and freezing point of fluids such as glycols and brines. It also displays the true value of flow through each valve.

The program will also size the pipe, generate Cv values for the ATC valves and give pre-set information for all TA valves on the project.



TA SCOPE

TA Series 734

The TA Series 734 SCOPE is a wireless, handheld device for the swift and accurate measurement of differential pressure, flow, temperature and power.

An independent sensor communicates with the TA SCOPE to deliver data quickly, thereby enabling contractors to balance a system, troubleshoot hydronic problems and log system performance.

The TA Series 734 SCOPE Premium is a more robust case compared to the TA Series 734 SCOPE. See page 12 of this publication for additional details on the TA SCOPE and TA SCOPE Premium.

Differential pressure:
- TA SCOPE: 0-29 psi / 0-200 kPa
- TA SCOPE (High Pressure): 0-145 psi / 0-1000 kPa

 © 2014 Victaulic Company. All rights reserved.

TA Series 734 SCOPE Premium / SCOPE

TA SCOPE Premium case is a robust partitioned case that includes:

- Combined safety pressure and temperature probe allowing automatic correction for fluid temperatures and easier power measurements
- A large set of accessories
- Extra space for a second (optional) differential pressure sensor and tools.

The TA SCOPE contains a reduced set of accessories compared to the TA SCOPE Premium. All * marked parts are included in both the TA SCOPE Premium and TA SCOPE kits.





1. *Handheld unit (Hh)
2. *Dp Sensor unit (DpS)
3. *Digital Temperature Sensor (DTS)
4. *Measuring hoses, 20 in. red/blue
5. Safety pressure and temperature probe (SPTP)
6. Safety pressure probes (SPP)
7. Measuring hoses with twin needle, 5.9 in
8. Flashlight
9. Mirror
10. Chucks for older valves, red/blue
11. *Allen Keys 3mm/5mm
12. Spanner for measuring points on older valves
13. *Presetting tool TA Series TC/TCM/TCP
14. *Spare filters (4 pcs)
15. Chain for mounting
16. Neckstrap
17. *USB-cables for connection: Hh - DpS and Hh - PC
18. *Multi-charger for handheld, Dp sensor(s) and TA-SCOPE Relays
19. *DC cable (2 PCS)
20. *AC cable (EU, UK, US or AU.NZ)
21. Cable wrapping
22. *Case
23. TA-Select Software
24. User manual
25. *Calibration certificates for DpS, DTS, and SPTP
26. *Quick Guide
27. SPTP/SPP instruction
28. SPTP/SPP stickers

NOTE: * Denotes this part is available in the SCOPE as well as the SCOPE Premium.

 © 2014 Victaulic Company. All rights reserved.

Accessories

Drain Kit Series 786-DK

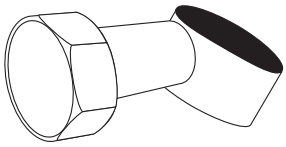

- A separate drain kit with a ¾"/20 mm connection is available for Series 786 and Series 787 valves
- Kit must be field mounted
- Kit comes complete with 2 gaskets and a hexnut.
- Partcode= K-000-786-CBV

Probe Port

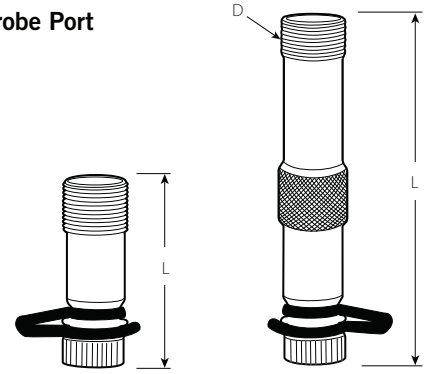

TA Series 786/787/788/789 TA Series 788/789

Style	Size		
	inches mm	Part Code	L inches mm
786/787	½ – 2 15 – 50	K-000-740-003	1.75 45
788/789	2½ – 16 65 – 400	K-000-740-002	1.19 30
788/789	2½ – 16 65 – 400	K-000-740-001	3.50 89

Universal Gauge Meter Conversion Kit

- This kit includes 2 probes, necessary fittings, flow wheel and instruction sheet.
- Partcode= K-000-738-100

Handwheels

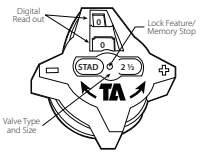

TA Series 786/787
Plastic
½–2"

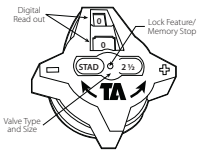

TA Series 788/789
Plastic
2½–6"

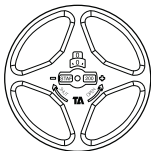

TA Series 788/789
Aluminum
8–16"

Part Code	Part Code	Part Code
P-004-784-001	P-024-784-001	P-080-784-001

Balancing Wheel



By using the balancing wheel it is easy to determine the relationship between flow, pressure drop and the handwheel setting values for all valve sizes. Order the balancing wheel from your nearest Victaulic representative.

 © 2014 Victaulic Company. All rights reserved.

Prefab Insulation

TA Series 786 & TA Series 787

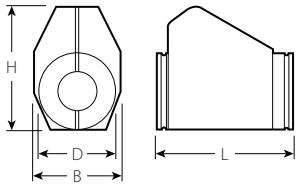

Valve Size inches mm	Part Code	Dimensions Inches/mm			
		H	D	B	L
½ & ¾ 15 & 20	K-004-784-INS	5.31 135	3.54 90	4.06 103	5.51 140
1 25	K-010-784-INS	5.59 142	3.70 94	4.06 103	6.30 160
1 ¼ 32	K-012-784-INS	6.14 156	4.17 106	4.06 103	7.09 180
1 ½ 40	K-014-784-INS	6.65 169	4.25 108	4.45 113	8.43 214
2 50	K-020-784-INS	7.01 178	4.25 108	4.49 114	9.65 245

Prefab Insulation

TA Series 788 & TA Series 789

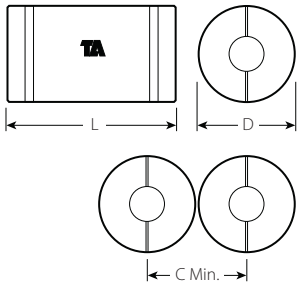

Valve Size inches mm	Part Code	Dimensions Inches/mm		
		H	D	B
2 ½ 65	K-024-784-INS	17.75 451	10.63 270	10.63 270
3 80	K-030-784-INS	19.00 483	11.44 291	11.44 291
4 100	K-040-784-INS	20.50 521	12.63 321	12.63 321
5 125	K-050-784-INS	22.50 572	13.75 349	13.75 349
6 150	K-060-784-INS	26.00 660	15.00 381	15.00 381

 © 2014 Victaulic Company. All rights reserved.

Correction Factors:

For liquids other than water, the flow values from the balancing wheel can be adjusted as follows:

Divide the flow rate (as indicated by the balancing wheel) by the square root of the specific gravity.

$$\text{Actual Flow} = \frac{q_{CBI}}{\sqrt{SG}}$$

This applies to liquids having, on the whole, the same viscosity as water, i.e. most water/glycol mixtures and water/brine solutions at room temperature. At low temperatures, the viscosity increases and laminar flow may occur in certain valves. The risk increases with small valves, low settings and low differential pressures.

A computer program (TA-Select) is available for calculation of pre-setting values and other applications. When the flow setting is verified or changed to the final setting, the memory stop should be set. Contact Victaulic for further information.

Correction Factors:

When Δp and the design flow rate are known, use the formula shown to calculate the C_V value or use the graphs on page 17 – 19. The Tour & Andersson balancing wheel can also be used.

$$C_v = 1.52 \frac{q}{\sqrt{\Delta p}}$$

q in GPM, Δp in Ft. of H_2O

$$C_v = \frac{q}{\sqrt{\Delta p}}$$

q in GPM, Δp in psi

A computer program, TA-Select, is available from Victaulic for calculation of pre-setting values and other applications.

 © 2014 Victaulic Company. All rights reserved.

C_V Values for various handle settings

TA Series 788/789

The values below or the graph on page 17 and 18 may be used when calculating and sizing a piping system.

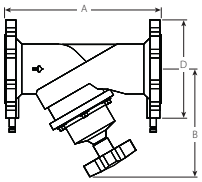

TA Series 788

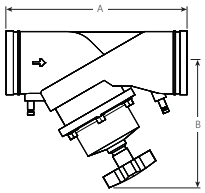

TA Series 789

Style	C_V Values for Sizes listed below [4]									
No. of Turns	2½"	3"	4"	5"	6"	8"	10"	12"	14" [5]	16" [5]
0.50	2.09	2.32	2.90	6.38	7.54	—	—	—	—	—
1.00	3.94	4.64	6.96	12.20	13.90	—	—	—	—	—
1.50	5.68	6.96	10.40	18.00	25.50	—	—	—	—	—
2.00	7.54	9.28	13.30	24.90	46.40	46.40	104.00	—	—	—
2.50	10.80	12.80	18.60	31.30	75.40	58.00	128.00	—	—	—
3.00	18.90	16.20	30.20	41.80	116.00	75.40	162.00	174.00	124.90	143.20
3.50	29.70	22.60	51.00	63.80	157.00	104.00	226.00	267.00	147.80	169.60
4.00	40.90	33.60	73.10	96.30	196.00	139.00	296.00	348.00	169.60	195.50
4.50	51.60	47.60	92.80	132.00	240.00	191.00	371.00	429.00	194.80	238.30
5.00	60.30	63.80	114.00	164.00	281.00	261.00	447.00	522.00	237.10	302.40
5.50	70.20	78.90	133.00	194.00	324.00	331.00	516.00	621.00	291.00	373.50
6.00	78.90	92.80	153.00	229.00	362.00	394.00	580.00	719.00	346.00	442.20
6.50	84.70	107.00	168.00	255.00	394.00	464.00	632.00	800.00	403.30	514.40
7.00	89.30	119.00	184.00	289.00	426.00	505.00	684.00	870.00	462.80	590.00
7.50	93.40	131.00	203.00	320.00	454.00	545.00	766.00	945.00	539.60	675.90
8.00	98.60 [6]	139.00 [6]	220.00 [6]	348.00 [6]	487.00 [6]	597.00	841.00	1032.00	637.00	779.00
9.00	—	—	—	—	—	690.00	951.00	1125.00	898.10	1024.20
10.00	—	—	—	—	—	754.00	1090.00	1206.00	1096.40	1306.00
11.00	—	—	—	—	—	824.00	1218.00	1299.00	1260.20	1432.00
12.00	—	—	—	—	—	887.00 [6]	1375.00 [6]	1392.00	1443.50	1603.90
13.00	—	—	—	—	—	—	—	1531.00	1626.80	1787.20
14.00	—	—	—	—	—	—	—	1589.00	1844.50	1981.90
15.00	—	—	—	—	—	—	—	1624.00	2016.30	2222.50
16.00	—	—	—	—	—	—	—	1682.00 [6]	2142.30	2451.60
17.00	—	—	—	—	—	—	—	—	2245.40	2612.00
18.00	—	—	—	—	—	—	—	—	2337.10	2760.90
19.00	—	—	—	—	—	—	—	—	2440.20	2898.40
20.00	—	—	—	—	—	—	—	—	2520.40 [6]	3013.00
21.00	—	—	—	—	—	—	—	—	—	3104.60
22.00	—	—	—	—	—	—	—	—	—	3184.80 [6]

4 C_v = GPM at a ΔP of 1 psi/7 kPa) through the valve at any given setting.

1 psi = 2.31 ft. of H_2O

5 Only the TA Series 788 Flanged End Balancing Valve is available in 14-16" / 350-400mm sizes.

6 Full open valve.

 © 2014 Victaulic Company. All rights reserved.

Diagram

TA Series 786/787 and Series 78K

This graph shows the pressure drop across the pressure test points of the valve.

A straight line connecting the bars for flow rate, C_V and pressure drop shows the relationship between these variables. The position for each valve size is arrived at by drawing a horizontal line from the C_V value obtained.

Example:

Wanted: Pre-setting for a 1" valve at a desired flow rate of 6.7 GPM and a pressure drop of 3 ft.

Solution: Draw straight line joining 6.7 GPM and 3 ft. This gives C_V = 5.9. Now draw a horizontal line from C_V = 5.9. This intersects the bar for a 1" valve at the desired pre-setting of 2.35 turns.

Note:

If the flow rate falls outside of the scale in the diagram, the reading can be made as follows: Starting with the example above, we get 3 ft., C_V = 5.9 and the flow rate 6.7 GPM. At 3 ft. and C_V = .59 we get the flow rate .67 GPM. That is, for a given pressure drop, it is possible to read 10 times or 0.1 times the flow and C_V values.

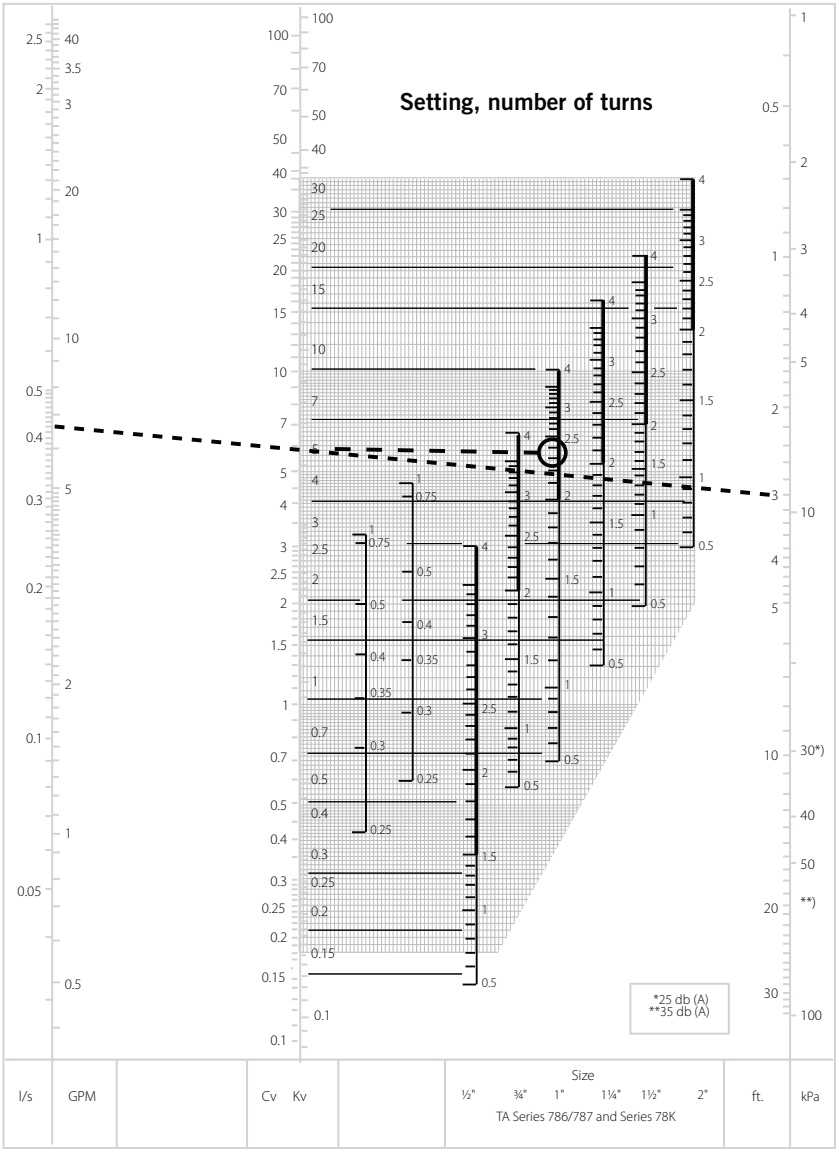

 © 2014 Victaulic Company. All rights reserved.

Diagram

TA Series 788/789
Sizes 2½ – 6"/60 – 150 mm

This graph shows the pressure drop across the pressure test points of the valve.

A straight line connecting the flow rate scale, C_V and pressure drop shows the relationship between these variables.

Example:

Wanted: Pre-setting for a TA Series 788 or TA Series 789 2 ½" at a desired flow rate of 47 GPM and a pressure drop of 2 ft. WG.

Solution: Draw straight line joining 47 GPM and 2 ft. WG. This gives C_V = 50. Now draw a horizontal line from C_V = 50. This intersects the flow rate scale for Series 788 2 ½" at the desired pre-setting of 4.5 turns.

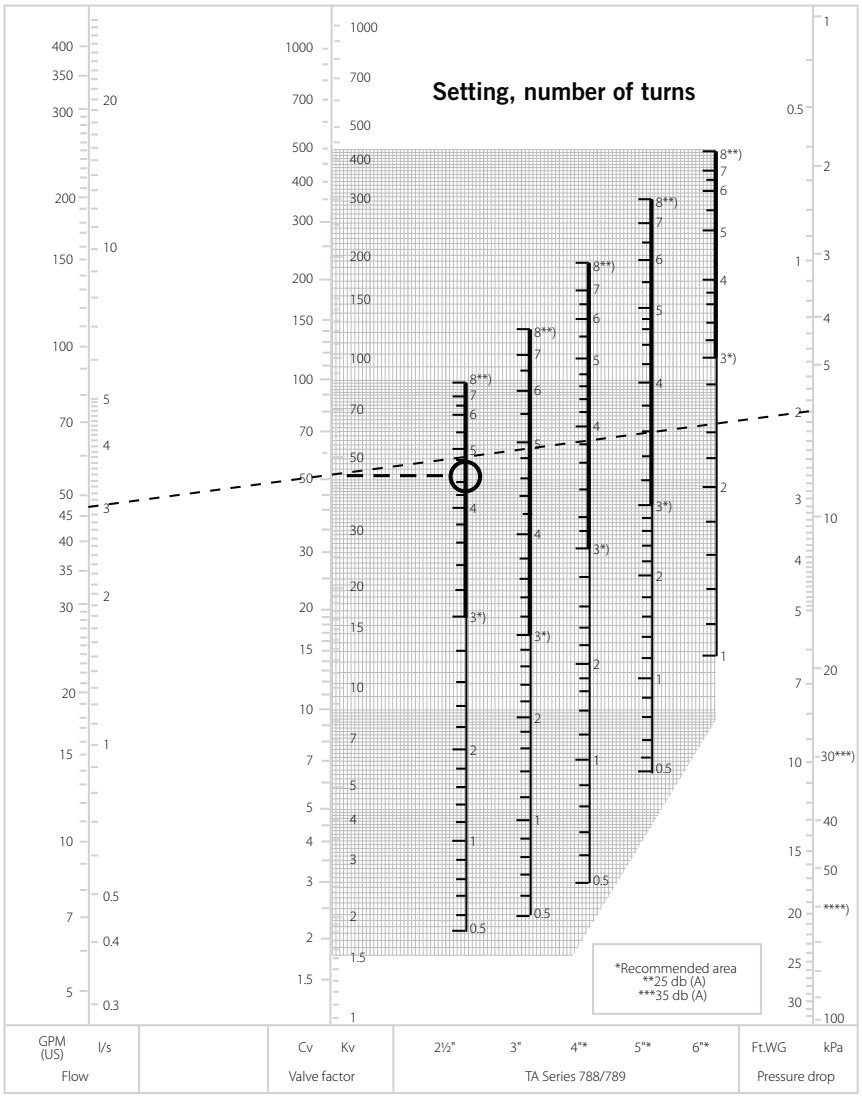

 © 2014 Victaulic Company. All rights reserved.

Diagram

TA Series 788/789
Sizes 8 – 16"/200 – 400 mm

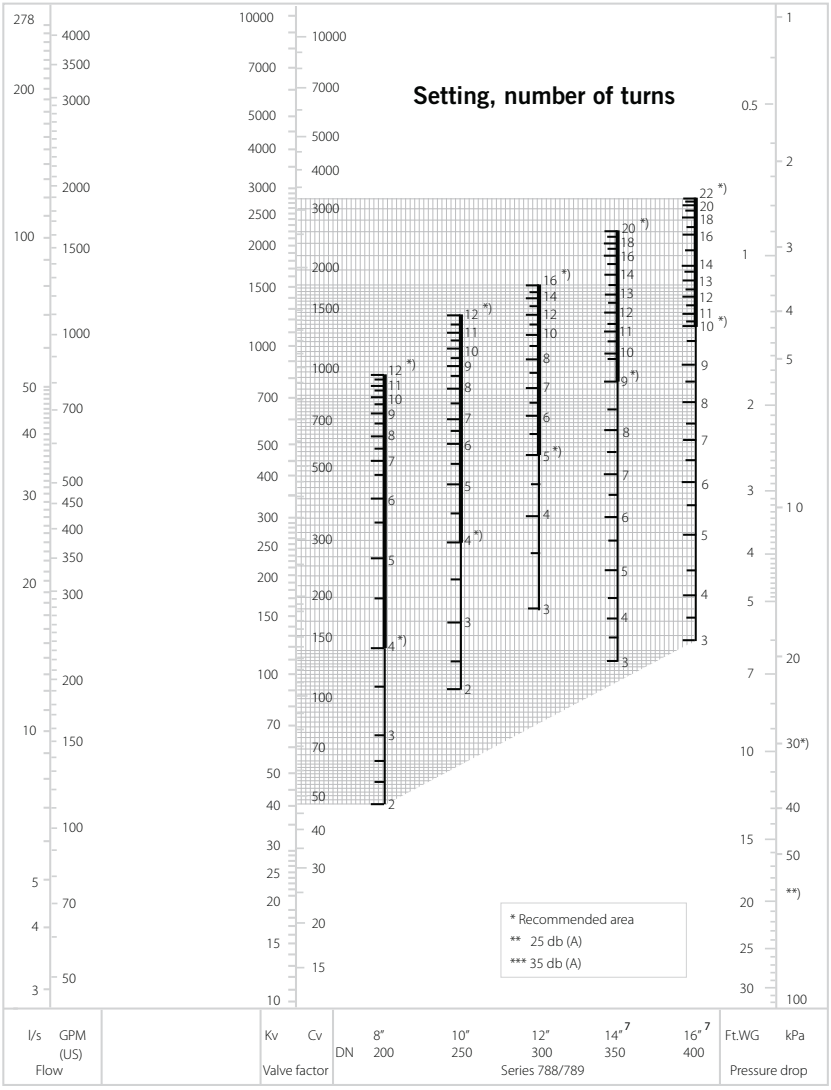

7 Only the TA Series 788 Flanged End Balancing Valve is available in 14-16" / 350-400mm sizes.

 © 2014 Victaulic Company. All rights reserved.

Typical Specifications:

SERIES 78K – (½ – 2" M x F)

TA SERIES 786 STAS – (½ – 2" SOLDER WITH DIGITAL HAND WHEEL)

TA SERIES 787 STAD – (½ – 2" NPT)

Furnish and install, as shown on the job plans, TA Series 786/787 Balancing Valves with provision for connecting a portable differential (Ft. of Head) pressure meter. Each meter shall have pressure/temperature probes.

The balancing valves shall be Y-pattern globe style design and all metal parts of nonferrous, pressure die cast, nonporous Ametal. Each valve shall provide four (4) functions:

(1) Precise flow measurement, (2) Precision flow balancing, (3) Positive shut-off with no drip seat, eliminating the need of an additional isolation valve, (4) Drain connection using 3/4 " NPT hose end thread.

These valves shall have four (4) 360° adjustment turns of the handwheel for precise setting with hidden memory to provide a tamper-proof balancing setting. Handwheel shall have digital readout. The handwheel can be installed in any position without affecting performance.

TA SERIES 788 STAF – (2 ½ – 12" FLANGED WITH DIGITAL HAND WHEEL)

TA SERIES 789 STAG – (2 ½ – 12" GROOVED WITH DIGITAL HAND WHEEL)

Furnish and install, as shown on the job plans, TA Series 788/789 Balancing valves with provision for connecting a portable differential (Ft. of Head) pressure meter. Each meter connection shall have pressure/temperature probes.

The balancing valves shall be Y-pattern globe style design with ductile iron body all other wetted parts of nonferrous, pressure die cast Ametal. Each valve shall provide three (3) functions:

(1) Precision flow measurement, (2) Precision flow balancing, (3) Shut-off feature, eliminating the need of an additional isolation valve.

These valves shall have eight (8), twelve (12), sixteen (16) or twenty-two (22) 360° adjustment turns of the handwheel for precise setting with hidden memory feature to program the valve with precision tamper-proof balancing setting. Handwheel shall have digital readout. The handwheel can be installed in any position without affecting performance.

TA Balancing Valves ½" through 2":

300 psi/2065 kPa, y-pattern, globe type with soldered or threaded ends, non-ferrous Ametal® brass copper alloy body, EPDM o-ring seals. 4-turn digital readout handwheel for balancing, hidden memory feature with locking tamper-proof setting, and connections for portable differential meter. TA Series 786 STAS or 787 STAD.

TA Balancing Valves 2 ½" through 16":

250 psi / 1725 kPa (TA Series 788) 350 psi / 2400 kPa (TA Series 789), y-pattern, globe type with flanged or grooved ends, ASTM A536 ductile iron body, all other metal parts of Ametal® brass copper alloy, EPDM O-ring seals. 8, 12, 16, 20 or 22 turn digital readout handwheel for balancing, hidden memory feature with locking tamper-proof setting, and connections for portable differential meter. TA Series 788 STAF or 789 STAG.

Purchased TA CBI-II or TA CMI balancing instruments are to be left with the project owner upon completion of the project.

Balancing Meter:

If a balancing meter is required to be left with the owner after commissioning, the balancing meter shall be from the same provider as the balancing valves, Victaulic/Tour and Andersson. The Series 734 TA-Scope, or TA Series 73M CMI Pressure Differential Meter are acceptable and are manufactured by Tour and Andersson. Needle gauge type meters will not be allowed.

INSULATION:

For insulation against heat loss or condensation. Preformed rigid polyurethane insulation is available for ½ – 2" TA Series 786/787 valves and for 2 ½ – 6" TA Series 788/789 valves.

Installation
Reference should always be made to the current TA Hydronics installation/assembly instructions for the product you are installing. For coupling and strainer installation, reference should always be made to the I-100 Victaulic Field Installation Handbook for the product you are installing. Handbooks are included with each shipment of Victaulic products for complete installation and assembly data, and are available in PDF format on our website at www.victaulic.com

Warranty
Refer to the Warranty section of the current Price List or contact Victaulic for details.

Note
This product shall be manufactured by Victaulic or to Victaulic specifications. Victaulic recommends all products to be installed in accordance with current TA Hydronics installation/assembly instructions. Victaulic and TA Hydronics reserve the right to change product specifications, designs and standard equipment without notice and without incurring obligations.

Trademarks
Victaulic® is a registered trademark of Victaulic Company.

 © 2014 Victaulic Company. All rights reserved.

BUTTERFLY VALVES FOR HEATING WITH EPDM GASKET

"Apollo" Valves

SUBMITTAL SHEET

LEAD FREE

LD141/WD141 Series

General Purpose **Butterfly Valves**

Job Name:	
Job Location:	
Engineer:	
Contractor:	
Tag:	
PO Number:	
Representative:	
Wholesale Distributor:	



DESCRIPTION

The Apollo® LD141/WD141 Series Ductile Iron Butterfly Valves are ideal for use in Industrial and HVAC/Mechanical applications. The WD141 Series is a wafer style valve and the LD141 Series is a companion lug style.

FEATURES

- Compatible with ANSI 125# & 150# Flanges
- ISO 5211 Top Plate Allows Choice of Apollo® Pneumatic Actuators and manual operators
- Conforms to MSS SP-67 & API 609
- LD141 Series Suitable for End of Line Service to Rated Pressure (2" - 12")
- 3" -24" meet performance requirements of AWWA C-504

PERFORMANCE RATING

- Pressure Rating: 2" to 12": 200 psi
- Pressure Rating: 14" to 24": 150 psi

APPROVALS

- NSF/ANSI 372 Lead Free
- CRN 0C12102.8CL

MATERIAL OPTIONS

Body

- Ductile Iron ASTM A536, (65-45-12)

Disc Material

- Aluminum Bronze
- Ductile Iron A536 Nickel Plated
- Stainless Steel, CF8M

Seat Material

- EPDM: -20°F to +250°F Intermittent, 225°F Continuous
- BUNA-N: +10°F to +180°F

Operator

- -0 - None
- -1 - 10 Position Handle
- -2 - Gear Operator (12" handwheels)
- -3 - Infinite Position Handle
- -4 - Locking Handle
- -5 - Gear Operator w/ Chain Wheel
- -7 - Locking Gear Operator
- -8 - Locking Gear Operator w/ Chain Wheel

provide nickel plated ductile iron disc

provide 10 position lever handle

STANDARD MATERIALS LIST

Part Name	Material
Body	Ductile Iron ASTM A536
Bushings	Glass Reinforced Epoxy Resin
Stem Seal	Buna-N
Shaft	416 SS ASTM A276 Type 416

TORQUE RATING * (INCH - LBS)

Valve Size In.	Valve Size mm	Full Rated Pressures (psi) ΔP 50	ΔP 100	ΔP 150	ΔP 200	Flow Cv Full Open
2	50	100	106	111	117	115
2.5	65	150	163	176	189	196
3	80	207	220	232	244	302
4	100	290	323	357	390	600
5	125	423	481	540	598	1022
6	150	599	691	783	875	1579
8	200	1060	1183	1307	1430	3136
10	250	1671	1872	2074	2275	5340
12	300	2568	2795	3023	3250	8250
14	350	2640	3070	3500	N/A	11917
16	400	4260	4880	5500	N/A	16388
18	450	6287	7243	8200	N/A	21705
20	500	8360	9180	10000	N/A	27908
24	600	15427	16813	18200	N/A	43116

** Lubricating media service*

WEIGHT

Weight WD141 (lbs.)	Weight LD141 (lbs.)
6	9
8	10
9	11
11	18
15	22
18	26
32	43
47	66
-	102
-	148
-	206
-	277
-	410
-	592

** LEAD FREE: The wetted surfaces of this product shall contain no more than 0.25% lead by weighted average. Complies with Federal Public Law 111-380. ANSI 3rd party approved and listed.*

Apollo Valves / **Conbraco Industries, Inc.**
701 Matthews Mint-Hill Road, Matthews, NC 28105 USA
www.**apollovalves**.com | (704) 841-6000

This specification is provided for reference only. Conbraco Industries Inc. reserves the right to change any portion of this specification without notice and without incurring obligation to make such changes to Conbraco products previously or subsequently sold. Please visit our website @ www.apollovalves.com for the most current information.

AALBERTS INDUSTRIES

"Apollo" Valves

SUBMITTAL SHEET

LEAD FREE

LD141/WD141 Series

General Purpose **Butterfly Valves**

WD MODEL
2" - 12"

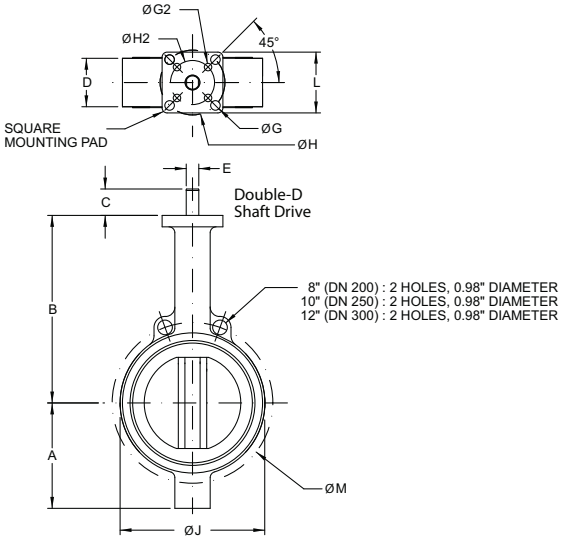

LD MODEL
2" - 12"

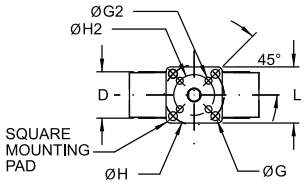

14" - 24"

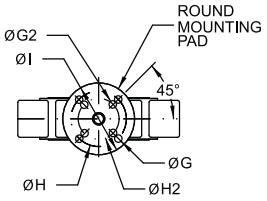

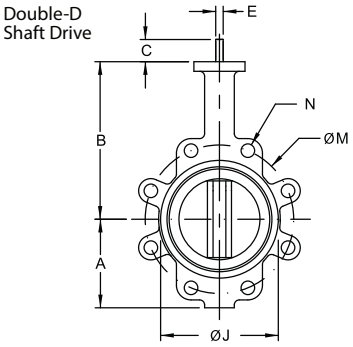

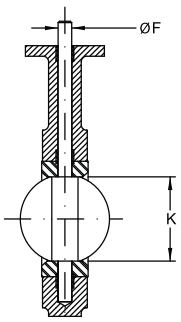

Shaft Drive:
Double-D (14")
Round & Keyed (16" & larger)

DOUBLE-D AND KEYED STEM

Size Inches	Size DN	Dimensions in Inches																	
		A	B	C	D	E	ØF	ØG	ØG2	Key	ØH	ØH2	ØI	ØJ	K	L	M	N (WD)	N (LD)
2	50	3.25	6.375	1.25	1.75	0.394	0.496	0.375	--	--	2.756	--	2.699	4	2.09	1.113	4.75	0.688	.625-11
2.5	65	3.75	6.880	1.25	1.88	0.394	0.496	0.375	--	--	2.756	--	2.699	4.75	2.54	1.706	5.50	0.688	.625-11
3	80	4.00	7.130	1.25	1.88	0.394	0.496	0.375	--	--	2.756	--	2.699	5.13	3.09	2.450	6.00	0.688	.625-11
4	100	4.88	7.880	1.25	2.13	0.472	0.621	0.375	--	--	2.756	--	2.699	6.75	4.09	3.488	7.50	0.688	.625-11
5	125	5.38	8.380	1.25	2.25	0.551	0.745	0.375	--	--	2.756	--	2.699	7.75	4.85	4.296	8.50	0.813	.625-11
6	150	5.88	8.880	1.25	2.25	0.551	0.745	0.375	--	--	2.756	--	2.699	8.63	6.13	5.697	9.50	0.813	.751-10
8	200	7.13	10.250	1.75	2.50	0.669	0.870	0.563	0.438	--	4.921	4.015	4.606	10.56	7.89	7.468	11.75	0.813	.750-10
10	250	8.25	11.500	1.88	2.75	0.866	1.120	0.563	0.438	--	4.921	4.015	4.606	13.06	9.89	9.484	14.25	0.938	.750-10
12	300	9.75	13.250	1.88	3.13	0.945	1.244	0.563	--	--	4.921	--	4.606	16	11.89	11.456	17.00	0.938	.875-9
14*	350	11.00	14.500	1.88	3.13	0.945	1.244	0.563	--	--	4.921	--	Ø5.91	17.13	13.38	13.000	18.75	1.060	.875-9
16*	400	12.00	15.750	2.00	3.50	--	1.313	0.563	--	0.313	4.921	--	Ø5.91	20	15.38	14.970	21.25	1.060	1.00-8
18*	450	14.38	16.630	2.00	4.25	--	1.500	0.813	--	0.375	6.496	--	Ø8.27	21.38	17.38	16.847	22.75	1.250	1.00-8
20*	500	14.63	18.880	2.50	5.25	--	1.625	0.813	--	0.375	6.496	--	Ø8.27	23.31	19.38	18.650	25.00	1.250	1.125-7
24*	600	18.00	22.130	2.75	6.13	--	2.000	0.813	--	0.500	6.496	--	Ø8.27	27.88	23.38	22.558	29.50	1.380	1.125-7

** LD141 Series only*

Apollo Valves / **Conbraco Industries, Inc.**
701 Matthews Mint-Hill Road, Matthews, NC 28105 USA
www.**apollovalves**.com | (704) 841-6000

This specification is provided for reference only. Conbraco Industries Inc. reserves the right to change any portion of this specification without notice and without incurring obligation to make such changes to Conbraco products previously or subsequently sold. Please visit our website @ www.apollovalves.com for the most current information.

AALBERTS INDUSTRIES

Mécanique Nordique
Plumbing
Heating
Ventillation
mecanique.nordique@hotmail.com
1255 Rue J.A.Bombardier Lévis QC G7A 2P4
Tél : (418) 496-1109 Fax : (418) 496-3803

REVIEWED BY CONTRACTOR
Kudlik Construction Ltd.
NAME: Sandra Rousseau P.Eng
DATE: Jul 03, 2018

IQUALUIT WWTP UPGRADES

DRAWING FOR APPROVAL

ENGINEER: **NUNAMI STANTEC LIMITED**

DRAWING #: AD-024

Section	:	23 21 14 HYDRONIC SPECIALTIES
Article	:	2.2
Plans	:	M-602
Application	:	AUTOMATIC AIR VENT
Brand	:	WATTS , ARMSTRONG
Model	:	FV-4 , 1-AV
Revised #	:	
Supplyer	:	WOLSELEY
Date	:	**02/07/2018**
By	:	Martin Boucher

STANTEC PROJECT #: 110126045
SUBMITTAL # AD-024

This review by Stantec is for general conformance with the design concept of Stantec's design of the:
☐ Architectural ☐ Electrical
☐ Structural ☐ Other
☑ Mechanical

component(s) only and does not mean that Stantec has verified or approves the shop drawing(s). The Contractor remains solely responsible for the shop drawing(s) and this review by Stantec does not relieve the Contractor of the Contractor's responsibility for errors or omissions in the shop drawing(s) or for meeting all requirements of the contract documents. This review does not mean that Stantec approves the detailed design inherent in the shop drawing, responsibility for which shall remain with the Contractor submitting same, nor does this review mean that Stantec accepts any deviation of the shop drawing(s) from the contract documents. The Contractor is responsible for confirming all dimensions and correlating them at the job site, for all construction means, methods and techniques, and for coordination of construction work of all trades, including coordination of all shop drawings.

Stantec

☑ REVIEWED
☐ REVIEWED, AS NOTED
☐ REVISE AND RESUBMIT
☐ NOT REVIEWED

DATE 2018-07-04
BY Brendan Zrum, P.Eng

TAG: SECTION 23 21 14 2.2 AUTOMATIC AIR VENT

ES-FV-4M1

For Hydronic Heating Applications

Job Name _____ Contractor _____

Job Location _____ Approval _____

Engineer _____ Contractor's P.O. No. _____

Approval _____ Representative _____

Series FV-4M1

Automatic Air Vent Valves

Sizes: ⅛" – 1" (3 – 25mm)

Series FV-4M1 Automatic Air Vent Valves provide automatic air venting for hot or cold water distribution systems. These vents purge air that may be in the water system.

The vent valve utilizes a float to actuate the valve plug which is located at the top of the valve. Once the air is displaced and the system pressure is sustained, the valve plug seals and prevents any water from escaping from the system.

The float vent can also operate as an anti-vacuum device since it will permit air to enter the system when it must be drained. It can also be installed to permit the separation and dispersal of air while fluid is actually circulating in the system.

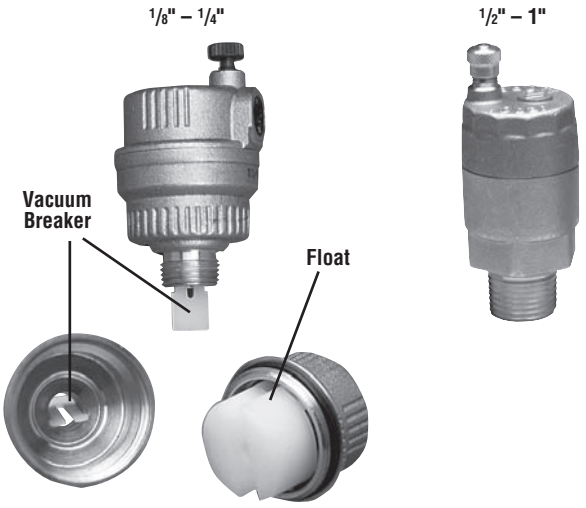

Features

- Body and cover are brass construction
- Air vent with silicone rubber seal
- Impurities do not usually affect function as maximum float line of water is always lower than the valve seal
- Float is high temperature resistant polyethylene
- Suitable for use with glycol systems
- Can be disassembled for inspection and cleaning

Pressure – Temperature

Minimum working pressure: 1.45psi (10 kPa)

Maximum working pressure: 150psi (10 bars)

Temperature Range: 33˚F – 240˚F (5˚C – 116˚C)

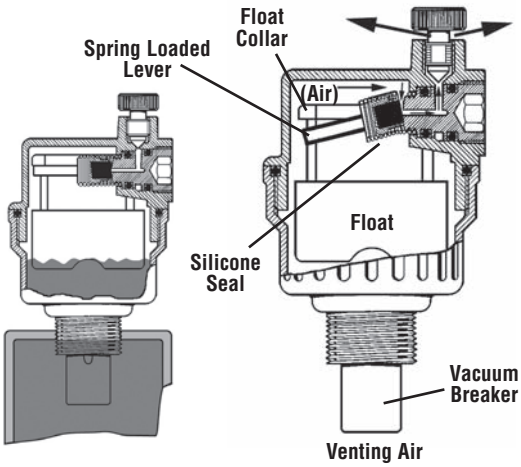

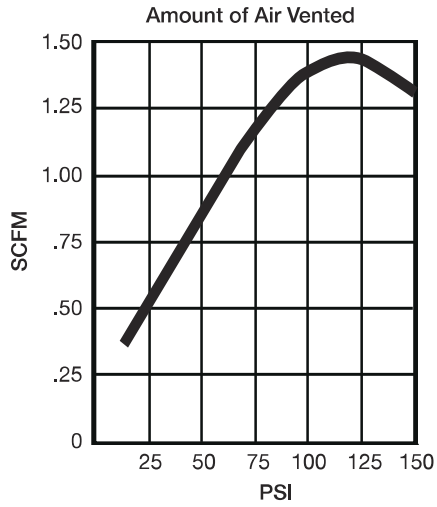

Diagram above shows the quantity of air vented by the "Float Vent" according to the pressure in the system.

Specifications

Air vent shall have brass body & cover and silicone rubber seal. Float shall be constructed of high temperature resistant polyethylene and shall be for use with glycol systems. Air vent shall be Watts Regulator Company Series FV-4M1.

WATTS® REGULATOR

Watts product specifications in U.S. customary units and metric are approximate and are provided for reference only. For precise measurements, please contact Watts Technical Service. Watts reserves the right to change or modify product design, construction, specifications, or materials without prior notice and without incurring any obligation to make such changes and modifications on Watts products previously or subsequently sold.

TAG: SECTION 23 21 14 2.2 AUTOMATIC AIR VENT

Installation

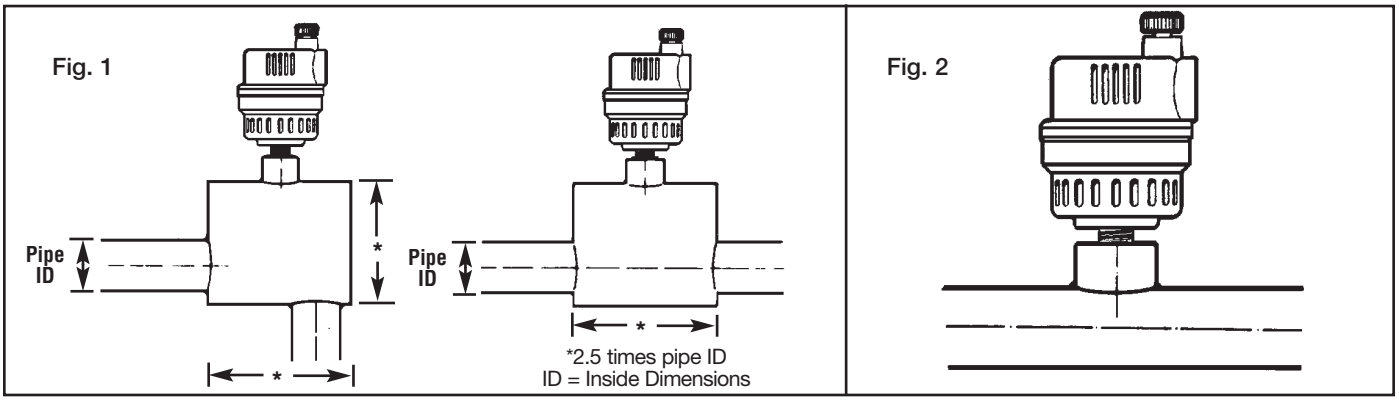

Figure 1 shows the installation of the FV-4M1 for the venting of air while the fluid is circulating in the system. The figure shows the required increase in pipe size in order to obtain proper separation of air from water. Watts Series AS Air Scoop which is designed for efficient separation of air from water in hydronic heating systems can also be installed. See Watts literature S-AS.

Figure 2 – When the FV-4M1 is installed as shown, the air will not be vented while the fluid is circulating in the system, but it can vent when the system is shut off.

The FV-4M1 should be mounted only in a vertical position as its operation is based on the vertical movement of the float (see Fig. 3).

Note: In order to get the best results in venting air from risers, use connecting pipes of at least ½" diameter between the "Float Vent" valves and the installation.

Maintenance

No maintenance is normally necessary. However, if the FV-4M1 is disassembled for inspection or cleaning it is important that when re-assembling to ensure that the spring loaded lever properly engages under the float collar (see reverse side).

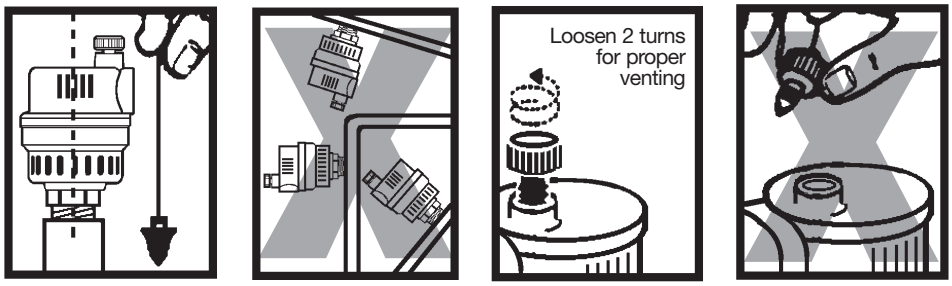

Fig. 3 Fig. 4

Operation: IMPORTANT!

After installing the FV-4M1, back off the small vent cap two turns (see Fig. 4). This is the proper operating setting which will allow air to be vented from the system. It is advisable to leave the cap on to prevent impurities from entering the valve.

Dimensions – Weights

SIZE (DN)		DIMENSIONS												WEIGHT	
		A		B		C		D		E		F			
in	mm	in	mm	in	mm	in	mm	in	mm	in	mm	in	mm	lbs	kg
⅛	3	2 15/16	75	2⅝	67	1⅝	41	13/16	21	5/16	7.9	5/16	7.9	.40	.18
¼	8	3⅛	79	2⅝	67	1⅝	41	13/16	21	⅛	3.1	½	12.7	.43	.20
½	15	3 5/16	85	2 11/16	69	1¼	32	1 1/16	18	⅝	16	–	–	.44	.20
¾	20	3⅜	85	2 11/16	69	1¼	32	1 1/16	18	⅝	16	–	–	.45	.20
1	25	3½	89	2 11/16	69	1⅜	35	1 1/16	18	13/16	20	–	–	.47	.21

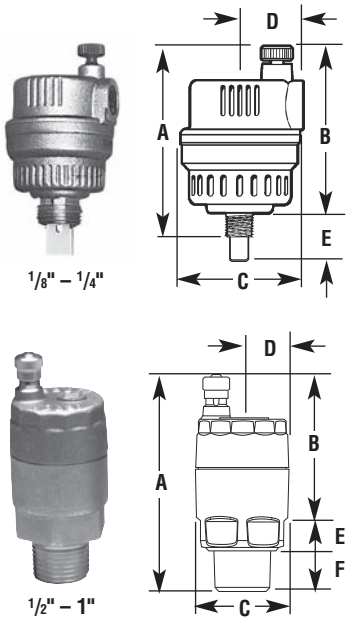

A LEADER IN VALVE TECHNOLOGY
WATTS® REGULATOR
Since 1874 — Watts Industries, Inc.
Water Products Division • Safety & Control Valves

ISO 9001 CERTIFIED

USA: 815 Chestnut St., No. Andover, MA 01845-6098; www.wattsreg.com
Canada: 5435 North Service Rd., Burlington, ONT. L7L 5H7; www.wattscda.com

© Watts Regulator Company, 2003

TAG: SECTION 23 21 14 2.2 AUTOMATIC AIR VENT

Free Floating Lever Air/Gas Vents—Cast Iron

For Pressures to 300 psig (21 bar) or Specific Gravity Down to 0.40

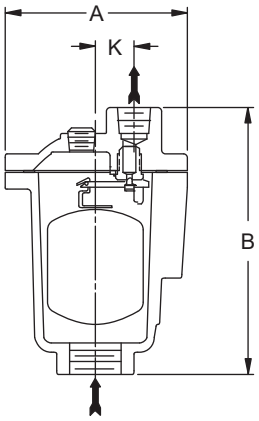

Model 1-AV

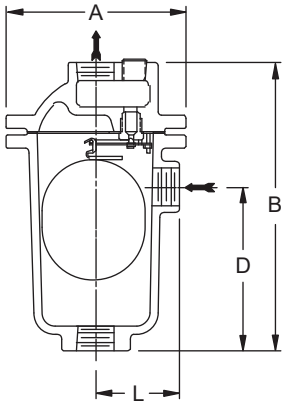

Model 2-AV, 3-AV and 6-AV



REVIEWED by MV

Armstrong free floating lever Air/Gas Vents use the same bodies, caps, lever mechanisms, valves and seats of Armstrong inverted bucket steam traps that have been proven in years of service.

Elliptical floats and high leverage make it possible to open large orifices to provide adequate capacity for vent size and weight. The hemispherical valve, seat and leverage are identical in design, materials and workmanship to those for saturated steam service up to 1,000 psig, with the exception of the addition of a guidepost to assure a positive, leaktight valve closing under all conditions.

1-AV—A cast iron air vent that uses a positive-closing free floating lever to ensure leaktight closing under all conditions. This vent is good for low capacity air/gas venting up to 300 psi.

For a fully detailed certified drawing, refer to CD #1070.

2-AV, 3-AV and 6-AV—Cast iron vents using the same proven free floating lever mechanisms used in Armstrong steam traps. For applications where high air/gas venting capacity is required up to 250 psi.

For a fully detailed certified drawing, refer to CD #1034.

Physical Data

Model No.	Cast Iron							
	1-AV**		2-AV		3-AV		6-AV	
Pipe Connections	in	mm	in	mm	in	mm	in	mm
	1/2*, 3/4*	15, 20	1/2, 3/4	15, 20	3/4, 1	20, 25	1-1/2, 2	40, 50
"A"	3-3/4	89	5-1/4	133	6-3/8	162	10-3/16	259
"B"	5-1/2	140	8	203	10-5/8	270	17	432
"D"	-	-	4-3/4	111	6-3/32	155	8-3/8	213
"K"	13/16	21	-	-	-	-	-	-
"L"	-	-	2-7/16	62	2-7/8	73	4-5/8	-
Weight, lb (kg)	4 (1.8)		13 (6)		22 (10)		80 (36)	
Max. Allowable Pressure (Vessel Design)	300 psig @ 200°F (21 bar @ 93°C) 250 psig @ 450°F (17 bar @ 232°C)		250 psig @ 450°F (17 bar @ 232°C)					

*Outlet connection 1/4" (7 mm). **1-AV available with side connection if specified on order. On models 2-AV, 3-AV and 6-AV, pipe size of side connections is same as that of inlet and outlet connections. Some floats are oil filled. Consult factory for details.

List of Materials

Model No.	Valve & Seat	Leverage System	Float	Body & Cap	Gasket	Bolts	Nuts
1-AV	Stainless Steel			ASTM A48 Class 30 Cast Iron	Non-asbestos	ASTM A193 Gr. B7	ASTM A563 Gr. A
2-AV						SAE Gr. 2	
3-AV							
6-AV							

All dimensions and weights are approximate. Use certified print for exact dimensions. Design and materials are subject to change without notice.

Armstrong Steam and Condensate Group, 816 Maple St., Three Rivers, MI 49093 – USA Phone: (269) 273-1415 Fax: (269) 278-6555
www.armstrong-intl.com

Free Floating Lever Air/Gas Vents—Cast Iron

For Pressures to 300 psig (21 bar) or Specific Gravity Down to 0.40

Armstrong®

1-AV Maximum Operating Pressures		
Minimum Specific Gravity	0.80	
Orifice Size (in)	Maximum Operating Pressure	
	psi	**bar**
1/8	146	10
7/64	173	12
#38	219	15
5/64	300	21

Maximum Operating Pressures of free floating lever vents with weighted floats for different orifice sizes, and the specific gravities on which they can be used.

2-AV Maximum Operating Pressures																						
Specific Gravity*	1.00		0.95		0.90		0.85		0.80		0.75		0.70		0.65		0.60		0.55		0.50	
Float wt., oz (g)	7.7 (217)		7.3 (206)		6.9 (195)		6.5 (184)		6.1 (174)		5.7 (163)		5.4 (152)		5.0 (141)		4.6 (130)		4.2 (119)		3.8 (109)	
Orifice Size (in)	Maximum Operating Pressure																					
	psi	bar	psi	bar	psi	bar	psi	bar	psi	bar	psi	bar	psi	bar	psi	bar	psi	bar	psi	bar	psi	bar
5/16	27	1.8	25	1.8	24	1.7	23	1.6	22	1.5	20	1.4	19	1.3	18	1.2	16	1.1	15	1.0	14	0.9
1/4	44	3.0	42	2.9	40	2.7	38	2.6	35	2.4	33	2.3	31	2.1	29	2.0	27	1.8	24	1.7	22	1.5
3/16	97	6.7	92	6.4	88	6.0	83	5.7	78	5.4	73	5.0	68	4.7	64	4.4	59	4.1	54	3.7	49	3.4
5/32	167	12	159	11	151	10.4	142	9.8	134	9.3	126	8.7	118	8.1	110	7.6	101	7.0	93	6.4	85	5.8
1/8	250	17	250	17	250	17	244	17	230	16	216	15	202	14	187	13	173	12	159	11	145	10.0
7/64	250	17	250	17	250	17	250	17	250	17	250	17	250	17	240	17	222	15	204	14	186	13
#38	250	17	250	17	250	17	250	17	250	17	250	17	250	17	250	17	250	17	250	17	231	16
5/64	250	17	250	17	250	17	250	17	250	17	250	17	250	17	250	17	250	17	250	17	250	17

3-AV Maximum Operating Pressures																		
Specific Gravity*	1.00		0.95		0.90		0.85		0.80		0.75		0.70		0.65		0.60	
Float wt., oz (g)	14.9 (423)		14.2 (402)		13.4 (381)		12.7 (360)		12.0 (339)		11.2 (318)		10.5 (296)		9.7 (275)		9.0 (254)	
Orifice Size (in)	Maximum Operating Pressure																	
	psi	bar	psi	bar	psi	bar	psi	bar	psi	bar	psi	bar	psi	bar	psi	bar	psi	bar
1/2	21	1.5	20	1.4	19	1.3	18	1.3	17	1.2	16	1.1	15	1.0	14	1.0	13	0.9
3/8	45	3.1	43	3.0	41	2.8	38	2.7	36	2.5	34	2.3	32	2.2	30	2.0	27	1.9
5/16	72	5.0	69	4.7	65	4.5	61	4.2	58	4.0	54	3.8	51	3.5	47	3.3	44	3.0
9/32	96	6.6	91	6.3	87	6.0	82	5.6	77	5.3	72	5.0	68	4.7	63	4.3	58	4.0
1/4	144	9.9	137	9.4	130	8.9	123	8.5	116	8.0	109	7.5	102	7.0	94	6.5	87	6.0
7/32	206	14	196	13	186	13	176	12	165	11	155	10.7	145	10.0	135	9.3	125	8.6
3/16	250	17	250	17	250	17	250	17	249	17	234	16	218	15	203	14	188	13
5/32	250	17	250	17	250	17	250	17	250	17	250	17	250	17	250	17	250	17

6-AV Maximum Operating Pressures																										
Specific Gravity*	1.00		0.95		0.90		0.85		0.80		0.75		0.70		0.65		0.60		0.55		0.50		0.45		0.40	
Float wt., oz (g)	73.5 (2,084)		69.8 (1,979)		66.2 (1,875)		62.5 (1,771)		58.8 (1,667)		55.1 (1,563)		51.5 (1,459)		47.8 (1,354)		44.1 (1,250)		40.4 (1,146)		36.8 (1,042)		33.1 (938)		29.4 (833)	
Orifice Size (in)	Maximum Operating Pressure																									
	psi	bar	psi	bar	psi	bar	psi	bar	psi	bar	psi	bar	psi	bar	psi	bar	psi	bar	psi	bar	psi	bar	psi	bar	psi	bar
1-1/16	22	1.5	21	1.5	20	1.4	19	1.3	18	1.2	17	1.2	16	1.1	14	1.0	13	0.9	12	0.8	11	0.8	10	0.70	9	0.62
7/8	35	2.4	33	2.3	31	2.2	30	2.0	28	1.9	26	1.8	24	1.7	23	1.6	21	1.5	19	1.3	18	1.2	16	1.1	14	1
3/4	50	3.5	48	3.3	45	3.1	43	3.0	40	2.8	38	2.6	35	2.4	33	2.3	30	2.1	28	1.9	25	1.8	23	1.6	20	1.4
5/8	77	5.3	73	5.0	69	4.8	66	4.5	62	4.3	58	4.0	54	3.7	50	3.5	46	3.2	43	2.9	39	2.7	35	2.4	31	2.2
9/16	102	7.0	97	6.7	92	6.3	87	6.0	82	5.6	77	5.3	72	4.9	67	4.6	62	4.2	57	3.9	51	3.6	46	3.2	41	3.9
1/2	148	10.2	140	9.7	133	9.2	126	8.7	119	8.2	111	7.7	104	7.2	97	6.7	89	6.2	82	5.6	75	5.1	67	4.6	60	4.1
7/16	210	14	200	14	189	13	179	12	168	12	158	11	148	10.2	137	9.5	127	8.7	116	8.0	106	7.3	96	6.6	85	5.9
3/8	250	17	250	17	250	17	250	17	250	17	249	17	233	16	216	15	200	14	184	13	167	12	151	10.4	134	9.3
11/32	250	17	250	17	250	17	250	17	250	17	250	17	250	17	250	17	250	17	245	17	223	15	201	14	179	12
5/16	250	17	250	17	250	17	250	17	250	17	250	17	250	17	250	17	250	17	250	17	250	17	250	17	230	16
9/32	250	17	250	17	250	17	250	17	250	17	250	17	250	17	250	17	250	17	250	17	250	17	250	17	250	17
1/4	250	17	250	17	250	17	250	17	250	17	250	17	250	17	250	17	250	17	250	17	250	17	250	17	250	17

*If specific gravity falls between those shown, use next lowest: e.g., if actual gravity is 0.73, use 0.70 specific gravity data.

Mécanique Nordique
Plumbing Heating Ventillation
mecanique.nordique@hotmail.com
1255 Rue J.A.Bombardier Lévis QC G7A 2P4
Tél : (418) 496-1109 Fax : (418) 496-3803

REVIEWED BY CONTRACTOR
Kudlik Construction Ltd.
NAME: Sandra Rousseau P.Eng
DATE: Jul 03, 2018

IQUALUIT WWTP UPGRADES

DRAWING FOR APPROVAL

ENGINEER: **NUNAMI STANTEC LIMITED**

DRAWING #: AD-025

Section	:	23 05 21 THERMOMETERS & PRESSURE GAUGE
Article	:	2.2 , 2.3 , 2.4 ,
Plans	:	M-602 , M-603
Application	:	DIRECT THERMOMETERS & PRESSURE GAUGE
Brand	:	BI METAL THERMOMETERS
Model	:	TBM30040 B1 & B8 , P9S90201 , P9S90203
Revised #	:	
Supplyer	:	WOLSELEY
Date	:	**02/07/2018**
By	:	Martin Boucher

STANTEC PROJECT #: 110126045
SUBMITTAL # AD-025

This review by Stantec is for general conformance with the design concept of Stantec's design of the:
☐ Architectural ☐ Structural ☑ Mechanical ☐ Electrical ☐ Other

Stantec

component(s) only and does not mean that Stantec has verified or approves the shop drawing(s). The Contractor remains solely responsible for the shop drawing(s) and this review by Stantec does not relieve the Contractor of the Contractor's responsibility for errors or omissions in the shop drawing(s) or for meeting all requirements of the contract documents. This review does not mean that Stantec approves the detailed design inherent in the shop drawing, responsibility for which shall remain with the Contractor submitting same, nor does this review mean that Stantec accepts any deviation of the shop drawing(s) from the contract documents. The Contractor is responsible for confirming all dimensions and correlating them at the job site, for all construction means, methods and techniques, and for coordination of construction work of all trades, including coordination of all shop drawings.

☑ REVIEWED
☐ REVIEWED, AS NOTED
☐ REVISE AND RESUBMIT
☐ NOT REVIEWED

DATE 2018-07-04
BY Brendan Zrum, P.Eng

TAG: SECTION 23 05 21 2.2 DIRECT READING THERMOMETERS



Description & Features:

- A general purpose, versatile 1" (25mm) to 6" (150mm) dial, 304 stainless steel thermometer
- Bi-metallic sensing element for reliable readings
- Back, bottom or adjustable angle connection
- Welded stem length from 2.5" (63mm) and up
- ±1% accuracy
- Anti-parallax dial that reduces operator reading errors
- Re-zero adjustment screws are standard on the 2" (50mm) to 6" (150mm) dials
- 5 year warranty

Applications:

- Industrial process, food processing and wastewater

Specifications	
Dial	1” (25mm), 2” (50mm), 3” (75mm), 4” (100mm), 5” (125mm), 6” (150mm) aluminum with black markings, dish-shaped
Case	AISI 304 SS
Stem	AISI 304 SS welded to socket, centre back, bottom or adjustable angle configurations (316 SS optional*) 2” (50mm): centre back connection only
Recalibrator	Standard**
Lens	1” (25mm): Acrylic Others: Glass standard, hermetically sealed
Ring	AISI 304 SS
Connection	1” (25mm): None 2” (50mm): ¼” NPT standard 3” (75mm), 4” (100mm), 5” (125mm), 6” (150mm): ½” NPT standard
Sensing Element	Bi-metallic coil
Pointer	Aluminum, painted black
Maximum Operating Pressure	125 psi (861 kPa)
Operating Temperature	75% of full scale value (recommended maximum)
Ambient Temperature	-58°F to 248°F (-50°C to 120°C)
Accuracy	±1%
Enclosure Rating	IP68

*Contact Winters for 316 SS requirements
**Not available on 1” pocket and 2” laboratory thermometer
Note: The use of a thermowell is recommended to protect the thermometer in corrosive or pressure applications, as well as to maintain a closed system during its removal from the process

TAG: SECTION 23 05 21 2.2 DIRECT READING THERMOMETERS

Order Codes (products in bold are normally in stock)

To order, specify the code for each dial/stem length and the range: i.e. TBM20025 - B26

Dial Size	Stem Length	Fixed Centre Back	Bottom	Adjustable Angle
1" (25mm) pocket thermometer	5" (125mm)	**TBM10050**	-	-
2" (50mm) lab thermometer	8" (200mm)	**TBM20080**	-	-
2" (50mm)	2.5" (63mm)	**TBM20025**	-	-
	4" (100mm)	**TBM20040**	-	-
	6" (150mm)	**TBM20060**	-	-
	9" (225mm)	**TBM20090**	-	-
	12" (300mm)	**TBM20120**	-	-
3" (75mm)	2.5" (63mm)	**TBM30025**	TBM31025	**TBM32025**
→	4" (100mm)	**TBM30040**	TBM31040	**TBM32040**
	6" (150mm)	**TBM30060**	TBM31060	**TBM32060**
	9" (225mm)	**TBM30090**	TBM31090	**TBM32090**
	12" (300mm)	**TBM30120**	TBM31120	**TBM32120**
4" (100mm)	2.5" (63mm)	TBM40025	TBM41025	TBM42025
	4" (100mm)	TBM40040	TBM41040	TBM42040
	6" (150mm)	TBM40060	TBM41060	TBM42060
	9" (225mm)	TBM40090	TBM41090	TBM42090
	12" (300mm)	TBM40120	TBM41120	TBM42120
5" (125mm)	2.5" (63mm)	**TBM50025**	TBM51025	**TBM52025**
	4" (100mm)	**TBM50040**	TBM51040	**TBM52040**
	6" (150mm)	**TBM50060**	TBM51060	**TBM52060**
	9" (225mm)	**TBM50090**	TBM51090	**TBM52090**
	12" (300mm)	**TBM50120**	TBM51120	**TBM52120**
6" (150mm)	2.5" (63mm)	TBM60025	TBM61025	TBM62025
	4" (100mm)	TBM60040	TBM61040	TBM62040
	6" (150mm)	TBM60060	TBM61060	TBM62060
	9" (225mm)	TBM60090	TBM61090	TBM62090
	12" (300mm)	TBM60120	TBM61120	TBM62120

Available Ranges					
°F & °C (Dual)	Code	°F only	Code	°C Only	Code
DUCT → -100°F to 150°F & -70°C to 70°C	**B1**	-40°F to 120°F	**B14**	-80°C to 50°C	B26
-40°F to 120°F & -40°C to 50°C	B2	-40°F to 160°F	**B15**	-50°C to 50°C	B27
0°F to 140°F & -20°C to 60°C	**B3**	0°F to 140°F	**B16**	0°C to 50°C	B28
-40°F to 160°F & -40°C to 70°C	**B4**	0°F to 200°F	**B17**	-50°C to 100°C	B29
25°F to 125°F & - 5°C to 50°C	B5	20°F to 240°F	**B18**	0°C to 100°C	B30
0°F to 200°F & -20°C to 90°C	**B6**	0°F to 250°F	**B19**	-20°C to 120°C	B31
20°F to 240°F & - 5°C to 115°C	B7	50°F to 300°F	**B20**	0°C to 150°C	B32
HW & DW → 0°F to 250°F & -20°C to 120°C	**B8**	50°F to 400°F	**B21**	0°C to 200°C	B33
50°F to 300°F & 10°C to 150°C	**B9**	50°F to 550°F	**B22**	0°C to 300°C	B34
50°F to 400°F & 10°C to 200°C	**B10**	150°F to 750°F	**B23**	0°C to 450°C	B35
50°F to 500°F & 10°C to 260°C	**B11**	0°F to 800°F	B24	100°C to 550°C	B36
150°F to 750°F & 100°C to 400°C	**B12**	200°F to 1,000°F	B25	-	-
200°F to 1,000°F & 100°C to 540°C	**B13**	-	-	-	-

Other ranges, stem lengths and connection sizes available upon request. Flat dial on 6" model available. For glycerin fill, maximum temperature limit is 300°F (150°C). Silicone fill available.

Option suffix:

AP3 = 3" acrylic lens
AP4 = 4" acrylic lens
AP5 = 5" acrylic lens
AP6 = 6" acrylic lens

BG3 = 3" glycerin filling
BG4 = 4" glycerin filling
BG5 = 5" glycerin filling
BG6 = 6" glycerin filling

DUCT = Aluminum duct flange
SCK = Socket conversion kit
SPG3 = 3" Shatterproof glass lens
SPG5 = 5" Shatterproof glass lens

Note: The use of a thermowell is recommended to protect the thermometer from corrosive or damaging environments, as well as to maintain a closed system during its removal from the process

TAG: SECTION 23 05 21 2.2 DIRECT READING THERMOMETERS

1” Back Connection

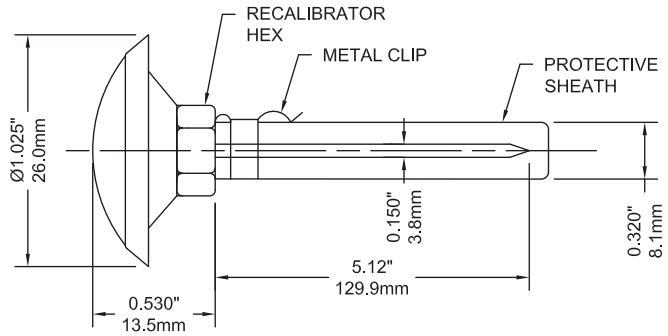

2” Back Connection

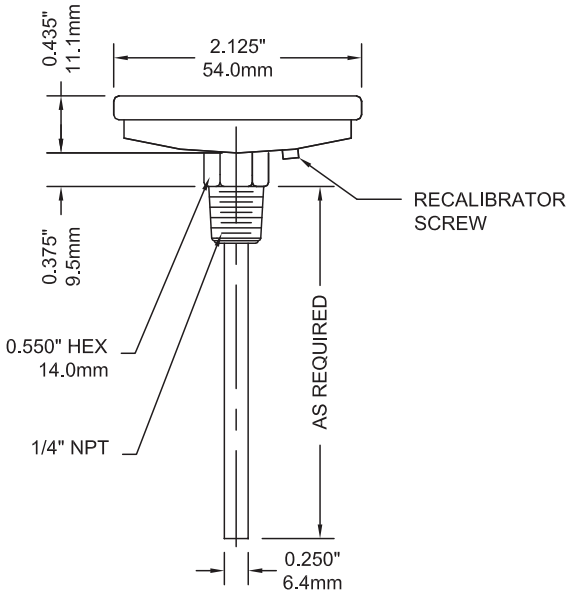

3” Adjustable Angle Connection

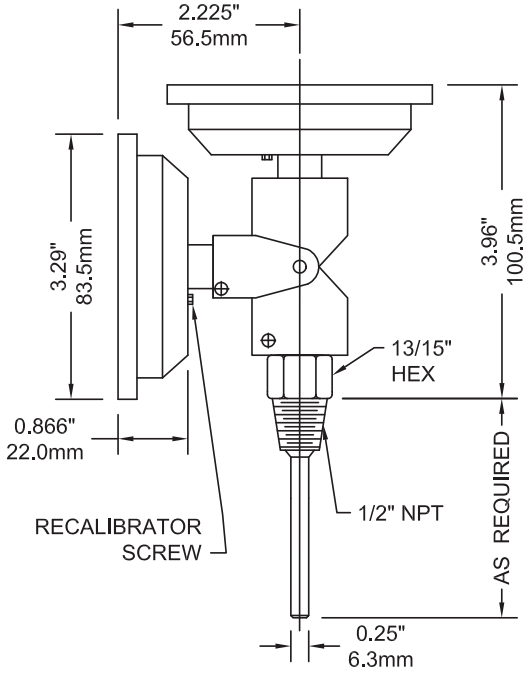

4” Back Connection

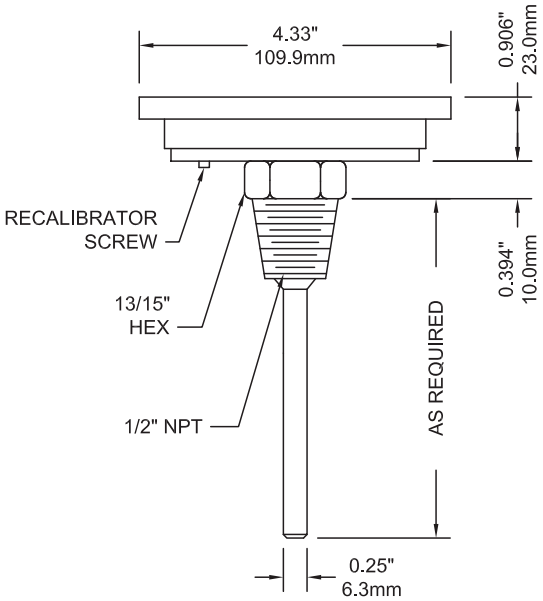

TBR Bi-Metal Threaded Thermowell

TAG: SECTION 23 05 21 2.3 THERMOWELL



RoHS compliant

Description & Features:

- Available in a wide range of materials for use on most applications
- Standard “stepped construction” offering is complemented by an array of custom thermowells including: straight, tapered, sanitary and flanged configurations
- CRN registered
- 1 year warranty

Applications:

- Allows for the creation of a “sealed system”, whereby the thermometer can be removed from the application without the need for shutting down or draining the system
- To protect the thermometer from possible exposure to the process media

Specifications	
Thermometer Connection	½” NPT female connection standard Other thread sizes are available upon request
Process Connection	¾”, ½” or 1” NPT connection standard Other thread sizes are available upon request
Bore	0.260” (6.5mm) bore standard
Construction	Stepped construction standard Tapered construction available upon request
Material	Brass, AISI 304 SS, AISI 316 SS standard Other materials available upon request

Material	Pressure - Temperature Rating (PSI)						
	70°F (21°C)	200°F (93°C)	400°F (204°C)	600°F (316°C)	800°F (427°C)	1000°F (538°C)	1200°F (649°C)
Brass	5,000	4,200	1,000	-	-	-	-
304 SS	7,000	6,200	5,600	5,400	5,200	4,500	1,650
316 SS	7,000	7,000	6,400	6,200	6,100	5,100	2,500

Note: For process media velocities above 10m/s (30 feet/s) contact Winters

TAG: SECTION 23 05 21 2.3 THERMOWELL

Order Codes (Thermowells without lag. Products in bold are normally in stock)

Stem Length A	NPT Connection P	Material	Code	Standard Insertion Length U	Shank Diameter
2.5" (63mm)	½"	Brass	**TBR2550**	1⅜" (35mm)	½" (12.5mm)
		304 SS	**TBR2550-1**		
		316 SS	**TBR2550-2**		
	¾"	Brass	**TBR25**		
		304 SS	**TBR25-1**		
		316 SS	**TBR25-2**		
4" (100mm)	½"	Brass	**TBR3550**	2.5" (63mm)	½" (12.5mm)
		304 SS	**TBR3550-1**		
		316 SS	**TBR3550-2**		
	¾"	Brass	**TBR35**		
		304 SS	**TBR35-1**		
		316 SS	**TBR35-2**		
	1"	Brass	TBR35100		
		304 SS	TBR35100-1		
		316 SS	TBR35100-2		
6" (150mm)	½"	Brass	**TBR650**	4.5" (115mm)	⅝" (16mm)
		304 SS	**TBR650-1**		
		316 SS	**TBR650-2**		
	¾"	Brass	**TBR6**		¾" (19mm)
		304 SS	**TBR6-1**		
		316 SS	**TBR6-2**		
	1"	Brass	TBR6100		⅞" (22mm)
		304 SS	TBR6100-1		
		316 SS	**TBR6100-2**		
9" (229mm)	½"	Brass	TBR950	7.5" (190mm)	⅝" (16mm)
		304 SS	TBR950-1		
		316 SS	TBR950-2		
	¾"	Brass	TBR9		¾" (19mm)
		304 SS	**TBR9-1**		
		316 SS	TBR9-2		
	1"	Brass	TBR9100		⅞" (22mm)
		304 SS	TBR9100-1		
		316 SS	TBR9100-2		
12" (305mm)	½"	Brass	TBR1250	10.5" (266mm)	⅝" (16mm)
		304 SS	TBR1250-1		
		316 SS	TBR1250-2		
	¾"	Brass	TBR12		¾" (19mm)
		304 SS	TBR12-1		
		316 SS	TBR12-2		
	1"	Brass	TBR12100		⅞" (22mm)
		304 SS	TBR12100-1		
		316 SS	TBR12100-2		

TAG: SECTION 23 05 21 2.3 THERMOWELL

Order Codes (Thermowells with lag. Products in bold are normally in stock)

Stem Length A	NPT Connection P	Material	Code	Standard Insertion Length U	Lag Length T	Shank Diameter
6" (150mm)	½"	Brass	TBRN650	2.5" (63mm)	2"	½" (12.5mm)
		304 SS	TBRN650-1			
		316 SS	TBRN650-2			
	¾"	Brass	**TBRN6**	2.5" (63mm)	2"	½" (12.5mm)
		304 SS	**TBRN6-1**			
		316 SS	TBRN6-2			
	1"	Brass	TBRN6100	2.5" (63mm)	2"	½" (12.5mm)
		304 SS	TBRN6100-1			
		316 SS	**TBRN6100-2**			
9" (229mm)	½"	Brass	TBRN950	4.5" (115mm)	3"	⅝" (16mm)
		304 SS	TBRN950-1			
		316 SS	TBRN950-2			
	¾"	Brass	TBRN9	4.5" (115mm)	3"	¾" (19mm)
		304 SS	TBRN9-1			
		316 SS	TBRN9-2			
	1"	Brass	TBRN9100	4.5" (115mm)	3"	⅞" (22mm)
		304 SS	TBRN9100-1			
		316 SS	TBRN9100-2			
12" (305mm)	½"	Brass	TBRN1250	7.5" (190mm)	3"	⅝" (16mm)
		304 SS	TBRN1250-1			
		316 SS	TBRN1250-2			
	¾"	Brass	TBRN12	7.5" (190mm)	3"	¾" (19mm)
		304 SS	TBRN12-1			
		316 SS	TBRN12-2			
	1"	Brass	TBRN1210	7.5" (190mm)	3"	⅞" (22mm)
		304 SS	TBRN1210-1			
		316 SS	TBRN1210-2			

Other configurations available. ¼" NPT thermometer connection available. BSP threads available upon request. Tapered construction available upon request. Other lengths available up to 48" (welded construction only). Other materials such as Monel®, Inconel®, Hastelloy® C and Titanium are available upon request.

Note: Standard well is stepped as shown to 0.5" OD except U=2.5". Straight shank supplied as an option. Specify additional lagging extensions as needed

Option suffix:
SCK = Socket Conversion Kit
W60 = Brass cap and chain (½")
W60-1 = Stainless steel cap and chain (½")

Hastelloy® is a registered trademark of Haynes International, Inc.
Inconel® is a registered trademark of Special Metals Corporation
Monel® is a registered trademark of Inco Alloys International

TAG: SECTION 23 05 21 2.3 THERMOWELL

Standard Thermowell without lag

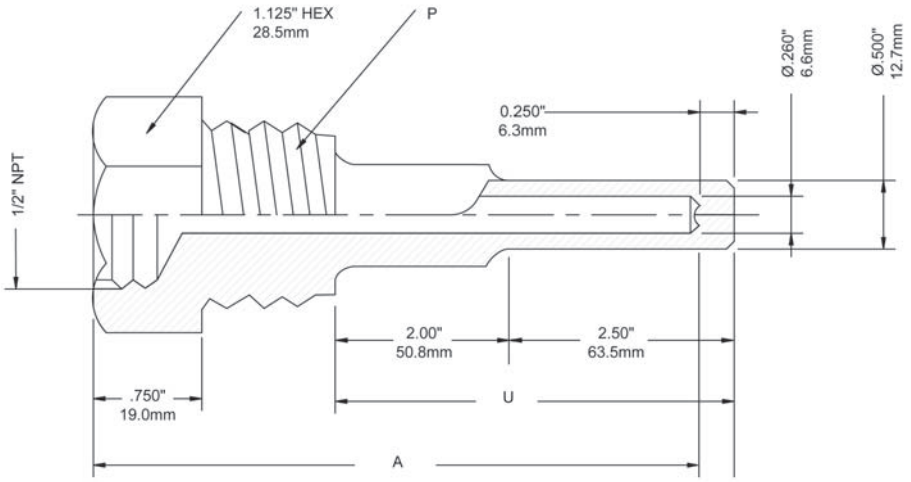

Standard Thermowell with lag

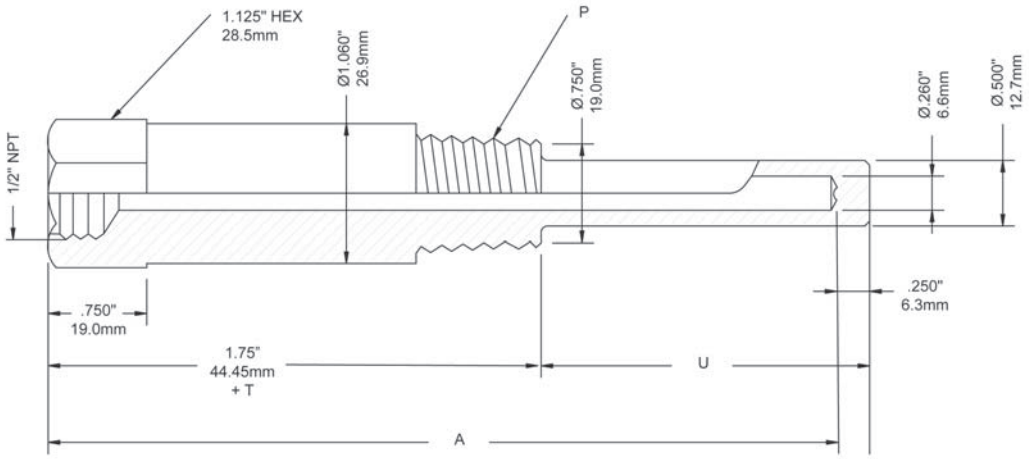

TAG: SECTION 23 05 21 2.4 PRESSURE GAUGES



Description & Features:

- A general-purpose gauge that is serviceable and pulsation resistant
- 1.5” (40mm) to 3.5” (90mm) dial sizes
- Dampened movement combined with a flutterless pointer
- Removable lens
- Zero-adjustment
- ASME B40.100 compliant
- CRN registered
- ±2-1-2% accuracy
- 5 year warranty

Applications:

- Compressors, filters, regulators, water pumps, paint sprayers and a variety of other rapid pressure fluctuation applications
- Suitable for non-clogging and non-corroding media

Specifications	
Dial	1.5” (40mm), 2” (50mm), 2.5” (63mm), 3.5” (90mm) white aluminum with black and red markings
Case	Steel, painted black
Lens	Acrylic, threaded
Socket	Brass
Connection	1/8” NPT or 1/4” NPT standard
Bourdon Tube	Phosphor bronze
Movement	Brass (flutterless) with zero adjustment
Pointer	Aluminum, black
Welding	<1,000 psi: 60% tin 40% lead, ≥1,000 psi: silver alloy
Over-pressure Limit	25% of full scale value
Working Pressure	Maximum 75% of full scale value
Ambient/Process Temperature	-40°F to 150°F (-40°C to 65°C)
Accuracy	±2-1-2% ANSI/ASME Grade A

1.5” Bottom Connection

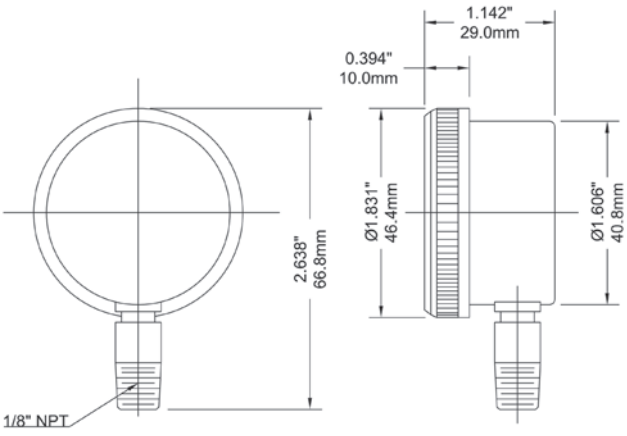

1.5” Back Connection

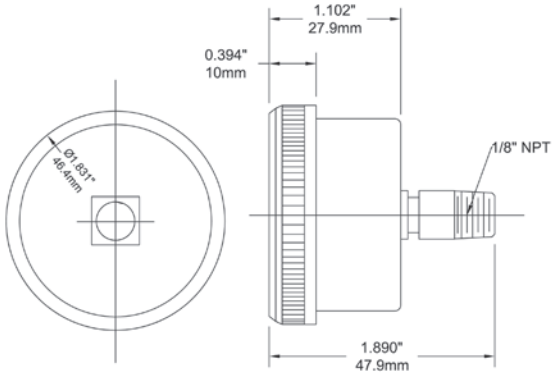

Economy

HW

DW

TAG: SECTION 23 05 21 2.4 PRESSURE GAUGES

Order Codes (products in bold are normally stock in North America)

Dial Size	1.5" (40mm)		2" (50mm)				2.5" (63mm)		3.5" (90mm)	
Connection	1/8" Bottom	1/8" Back (CB)	1/8" Bottom	1/8" Back (CB)	1/4" Bottom	1/4" Back (CB)	1/4" Bottom	1/4" Back (CB)	1/4" Bottom	1/4" Back (CB)
30" Hg Vac/kPa	P9S901297	P9S901397	P9S90195	P9S901424	P9S90135	P9S901428	P9S90210	P9S901431	P9S90220	P9S901455
30"/0/15 psi/kPa	-	-	-	-	-	-	P9S90152	-	-	-
30"/0/30 psi/kPa	-	-	-	-	-	-	**P9S90153**	-	-	-
30"/0/60 psi/kPa	-	-	-	-	-	-	P9S90154	-	-	-
30"/0/100 psi/kPa	-	-	-	-	-	-	P9S90155	-	-	-
0/15 psi/kPa	P9S901299	**P9S901399**	P9S90196	P9S901425	**P9S90136**	**P9S901429**	**P9S90211**	P9S901436	P9S90229	P9S901464
0/30 psi/kPa	P9S901300	**P9S901400**	P9S90206	P9S901402	P9S90199	**P9S901403**	**P9S90212**	P9S901437	**P9S90221**	P9S901456
0/60 psi/kPa	**P9S901301**	P9S901401	P9S90207	P9S901404	P9S90201	**P9S901405**	**P9S90213**	P9S901438	P9S90222	P9S901457
0/100 psi/kPa	P9S901320	P9S901420	P9S90208	P9S901406	**P9S90202**	**P9S901407**	**P9S90214**	P9S901439	**P9S90223**	P9S901458
0/160 psi/kPa	P9S901321	**P9S901421**	P9S90197	P9S901408	P9S90203	**P9S901409**	**P9S90215**	P9S901440	P9S90224	P9S901459
0/200 psi/kPa	P9S901322	P9S901422	P9S90209	P9S901426	P9S90204	P9S901410	**P9S90216**	P9S901441	**P9S90225**	P9S901460
0/300 psi/kPa	P9S901323	P9S901423	P9S90198	P9S901427	P9S90205	P9S901411	P9S90217	P9S901442	P9S90226	P9S901461
0/400 psi/kPa	P9S901324	P9S901443	P9S901449	P9S901445	P9S901451	P9S901447	P9S90219	P9S901453	P9S90227	P9S901462
0/600 psi/kPa	P9S901325	**P9S901444**	P9S901450	P9S901446	P9S901452	P9S901448	P9S90218	P9S901454	P9S90228	P9S901463

Other ranges and connection sizes available upon request. For scale change, refer to How to Order Guide for scale codes.

2" Bottom Connection

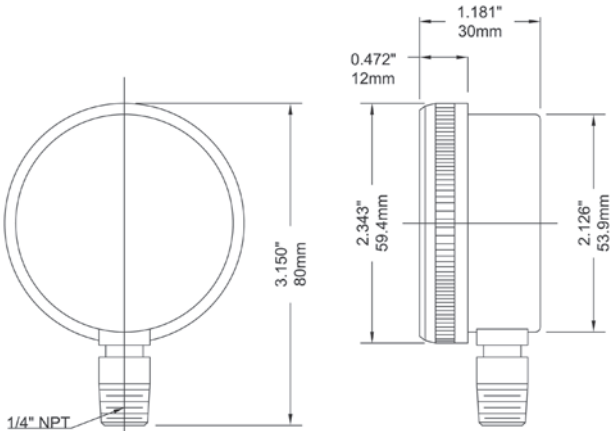

2" Back Connection

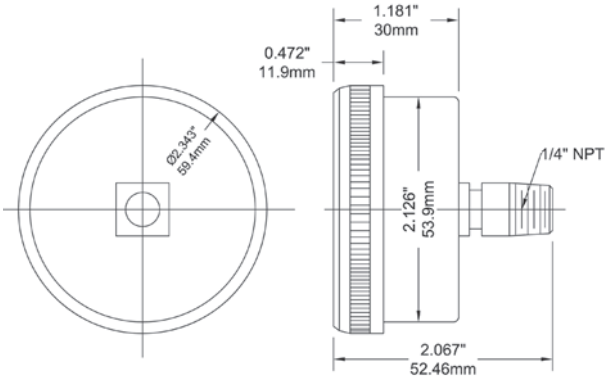

REVIEWED BY CONTRACTOR
Kudlik Construction Ltd.
NAME: Sandra Rousseau P.Eng
DATE: Jul 06, 2018

Mécanique Nordique Plumbing Heating Ventillation
mecanique.nordique@hotmail.com

1255 Rue J.A.Bombardier
Lévis, Québec
G7A 2P4
Téléphone: 418-496-1109
Télécopieur: 418-496-3803

IQALUIT WWTP UPGRADE

DRAWING FOR APPROVAL

Ingineer : NUNAMI STANTEC

DRAWING #: AD-026

Section		
Article		
Plans	M-801	Plumbing Fixtures Schedule
Application	: LV-1	
Brand	: American Standard	Moen
Model	: 7820.400	L64600
Revised #	: 1	
Supplyer	:Deschenes	
Pages incl.	5	
Date	: **2018-07-06**	
By	: **Mécanique Nordique Inc.**	

STANTEC PROJECT #: 110126045
SUBMITTAL # AD-026

This review by Stantec is for general conformance with the design concept of Stantec's design of the:
☐ Architectural ☐ Electrical
☐ Structural ☐ Other
☑ Mechanical

Stantec

component(s) only and does not mean that Stantec has verified or approves the shop drawing(s). The Contractor remains solely responsible for the shop drawing(s) and this review by Stantec does not relieve the Contractor of the Contractor's responsibility for errors or omissions in the shop drawing(s) or for meeting all requirements of the contract documents. This review does not mean that Stantec approves the detailed design inherent in the shop drawing, responsibility for which shall remain with the Contractor submitting same, nor does this review mean that Stantec accepts any deviation of the shop drawing(s) from the contract documents. The Contractor is responsible for confirming all dimensions and correlating them at the job site, for all construction means, methods and techniques, and for coordination of construction work of all trades, including coordination of all shop drawings.

☑ REVIEWED
☐ REVIEWED, AS NOTED
☐ REVISE AND RESUBMIT
☐ NOT REVIEWED

DATE 2018-07-13
BY Brendan Zrum, P.Eng

American Standard
Style That Works Better

BARRIER FREE

TAG : LV-1

NEWBERN™ VANITY TOP
FINE FIRE CLAY

NEWBERN™ VANITY TOP

❑ **7820.400** Faucet holes on 4" centers
❑ **7820.800** Faucet holes on 8" centers

- Seamless one piece design made from Fine Fire Clay
- Interior Oval bowl design
- Includes 1" backsplash
- Fits most standard 30" vanities
- Pre-drilled for 4" and 8" faucet holes
- Includes safety overflow design

Nominal Dimensions:
31-1/8" x 22-7/8"
(791 x 581 mm)

Bowl sizes:
16" (406mm) wide
13" (330mm) front to back
6-1/2" (165mm) deep

Compliance Certifications -
Meets or Exceeds the Following Specifications:
- ASME A112.19.9M for Non-Vitreous Ceramic Fixtures

To Be Specified
❑ Color: ❑ White
❑ Faucet:
❑ Faucet Finish:
❑ Supplies:
❑ Trap:

* See faucet section for additional models available



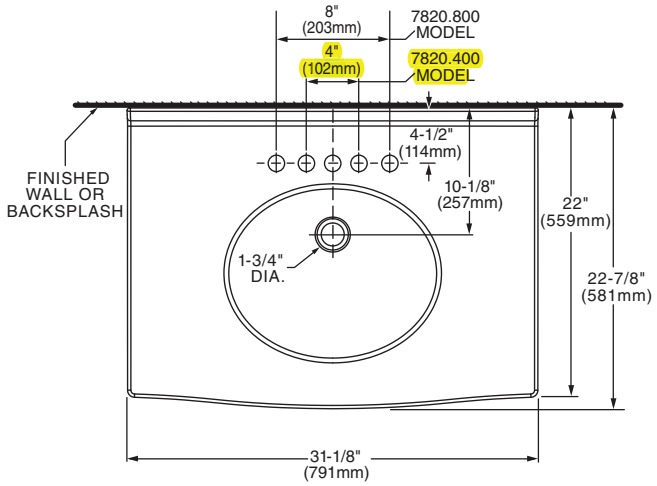

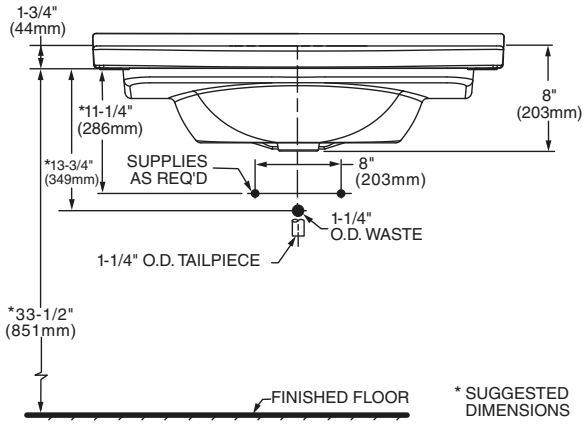

NOTES:
* DIMENSIONS SHOWN FOR LOCATION OF SUPPLIES AND "P" TRAP ARE SUGGESTED.
FITTINGS NOT INCLUDED WITH FIXTURE AND MUST BE ORDERED SEPARATELY.
FOR COUNTERTOP CUTOUT AND INSTALLATION INSTRUCTIONS USE TEMPLATE SUPPLIED WITH SINK.

IMPORTANT: Dimensions of fixtures are nominal and may vary within the range of tolerances established by ANSI Standard A112.19.9M. These measurements are subject to change or cancellation. No responsibility is assumed for use of superseded or voided pages.

© 2011 AS America Inc.

MOEN

Buy it for looks. Buy it for life.®

Specifications

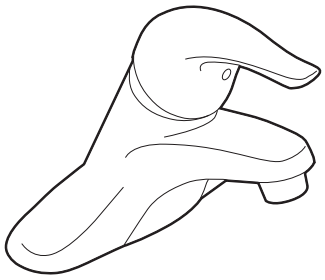

CHATEAU®
Single-Handle Lavatory Faucet

with Metal Waste Assembly
Model: L4625 series
L4631BC
Bulk Packed (12 per carton):
L64624 series

with 50/50 Waste Assembly
Bulk Packed (12 per carton):
L64625 series

Less Waste
Bulk Packed (12 per carton):
L64600 series

NOTE: THIS FAUCET IS DESIGNED TO BE INSTALLED THRU 3-1" DIA. HOLES, 2" ON CENTER

DESCRIPTION
- Metal construction with various finishes identified by suffix
- 16" long 3/8" tubing connections
- Includes metal or 50/50 pop-up type waste assembly where noted

OPERATION
- Pivot action lever style handle
- Temperature controlled through 180˚ degree arc of handle travel

FLOW
- Flow is limited to 1.5 gpm max (5.7L/min) at 60 psi

CARTRIDGE
- 1225 cartridge design
- Nonmetallic/nonferrous and stainless steel material
- Can accommodate reversed piping and back to back installations

STANDARDS
- Third party certified to WaterSense,® CSA B-125.1, ASME A112.18.1 and all applicable requirements referenced therein including NSF61/9
- Complies with California Proposition 65 and with the Federal Safe Drinking Water Act
- **ADA** for lever handle

WARRANTY
- Lifetime limited warranty against leaks, drips and finish defects to the original consumer purchaser
- 5 year warranty if used in commercial installations

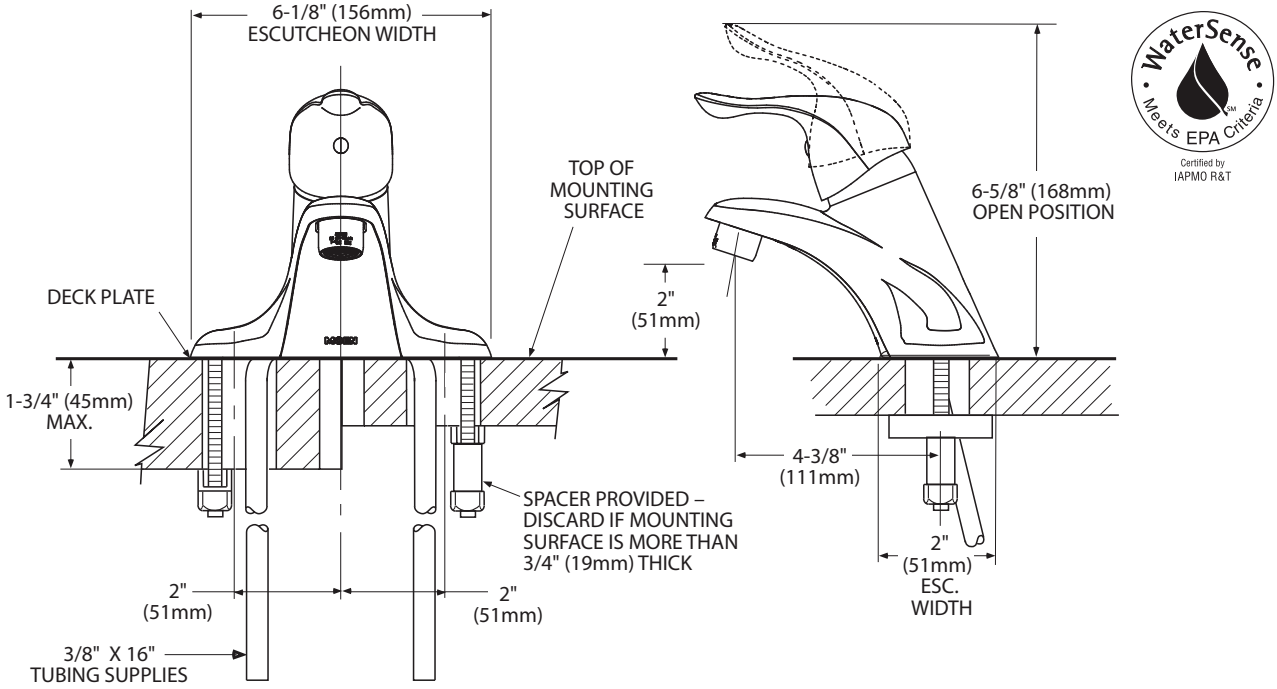

CRITICAL DIMENSIONS

(DO NOT SCALE)

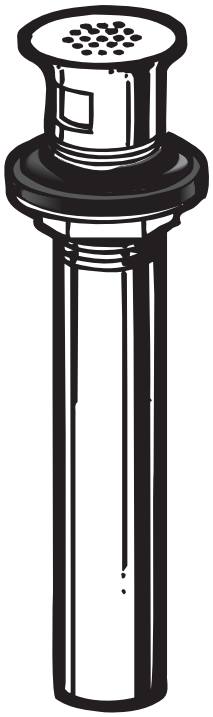

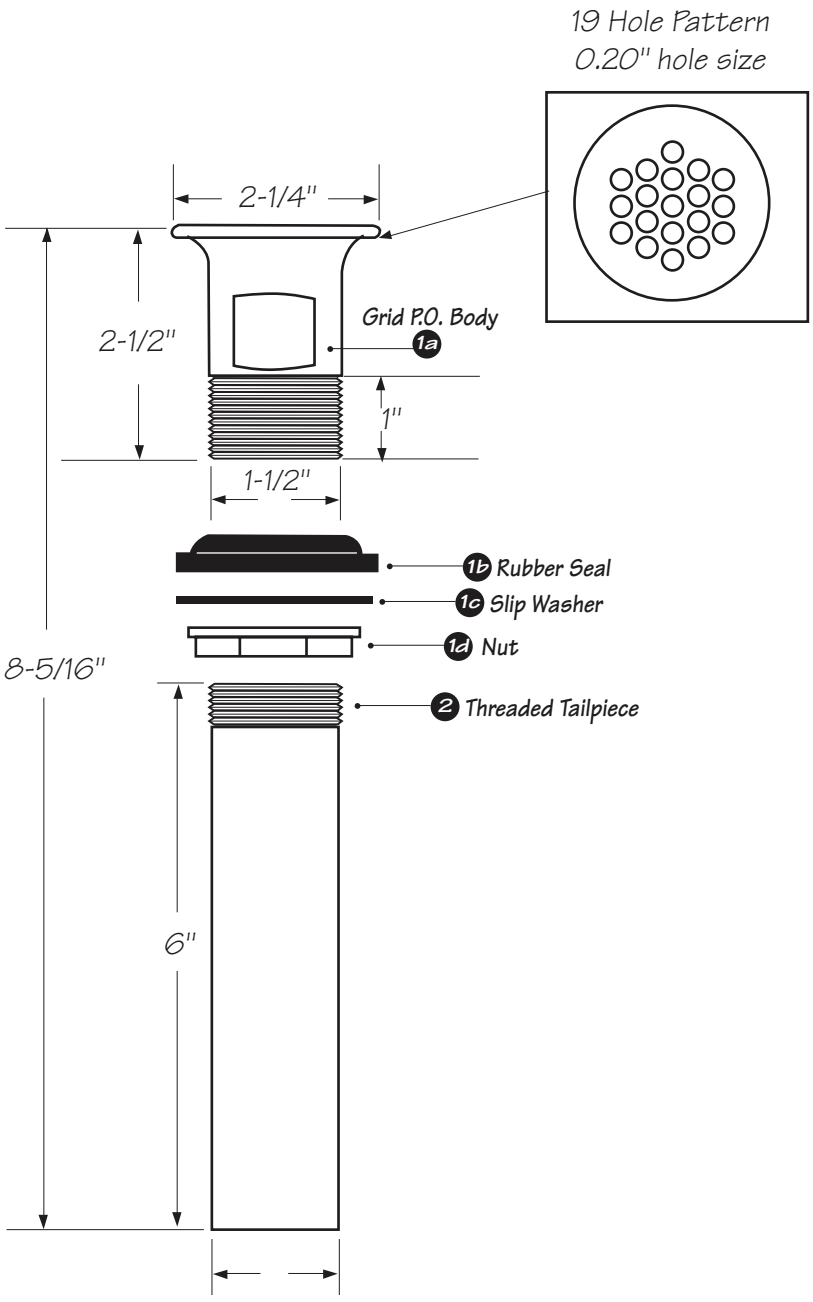

1	370	Grid P.O. Body Assembly
2	4831-6	17 Gauge Tailpiece

OS&B
OAKVILLE STAMPING & BENDING

Date: March 31/00	Approved by:	Drawn by: S.Black
Scale: not to scale		Revision: 01
Product: P.O. Plug		Number: 3700

McGuire Manufacturing Co., Inc.
60 Grandview Court
P.O. Box 746 • Cheshire, CT 06410
203-699-1801 • Fax: 203-699-1813
www.mcguiremfg.com

PRODUCT SPECIFICATION

Part No.
8872, 8902, 8902CNC, 8912, 8912CNC, 8903, 8904

Cast Body P-Trap With or Without Cleanout

Job Name: _____ **Submittal Number:** _____

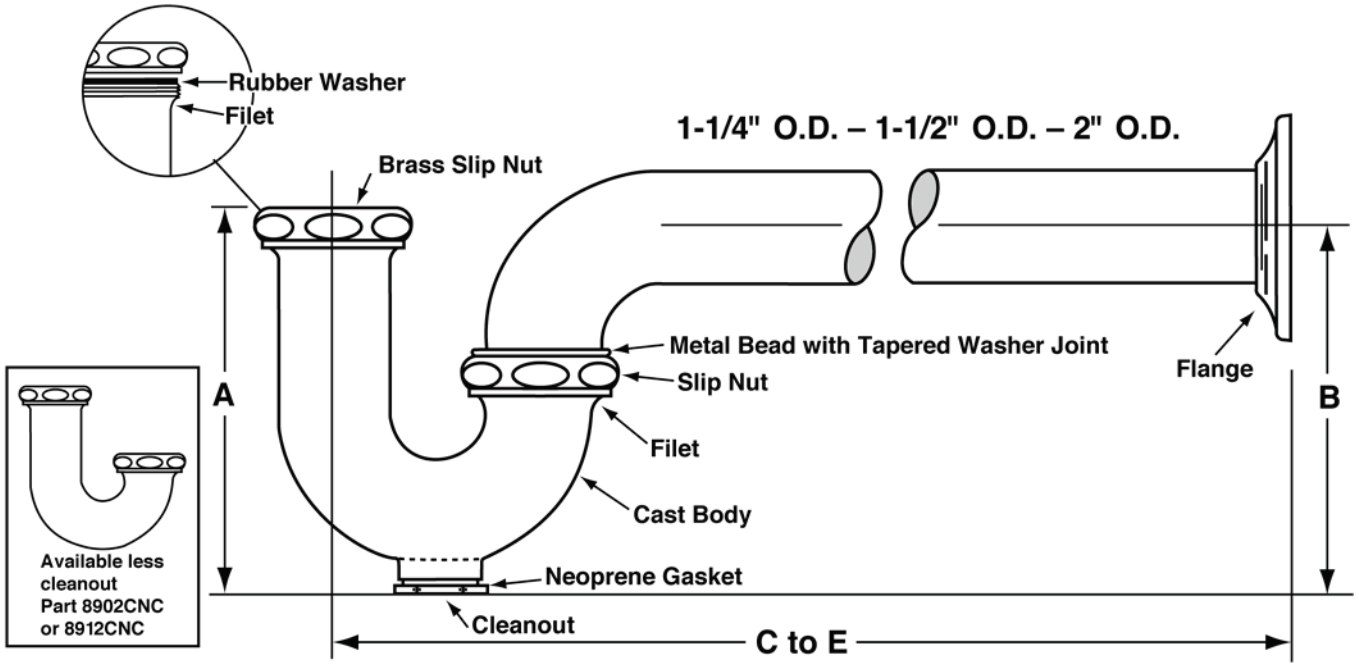

PROFESSIONAL LINE

ROUGHING MEASUREMENTS					
NO.	TRAP DIMENSIONS		A	B	C to E
	INLET	OUTLET			
8872	1-1/4"	1-1/4"	4-1/2"	4-1/4"	11-1/2"
8902	1-1/4"	1-1/2"	5"	5-1/2"	11-1/2"
8902CNC	1-1/4"	1-1/2"	4-5/8"	4-3/4"	11-1/2"
8912	1-1/2"	1-1/2"	5"	5-1/2"	11-1/2"
8912CNC	1-1/2"	1-1/2"	4-5/8"	4-1/8"	11-1/2"
8903	1-1/2"	2"	5"	6"	13-3/4"
8904	2"	2"	5"	6"	13-3/4"

FED SPEC W.W.P. 541
CAST BRASS P TRAP
MINIMUM SEAL 2"

See options and accessories section for details on product variations.

ASME A112.18.1-2011/CSA B125-2.11

Specifications:

P-Trap shall be chrome plated cast brass body (with, without) cleanout, with 17 gauge seamless tubular wall bend, cast brass slip nuts. Reducing washers shall be used with reducing cast brass nut. With (shallow, deep, bell) (steel, brass) or (forged brass with set screw) flange. P-Trap shall be McGuire "Classic" Professional Line (8872C, 8902C, 8912C, 8903, 8904). Trap shall be certified by CSA or other recognized testing authority. P-Trap shall bear manufacturer and testing mark.

© 2015 McGuire Manufacturing Co., Inc. All rights reserved / I Traps / www.mcguiremfg.com

REVIEWED BY CONTRACTOR

Kudlik Construction Ltd.

NAME: Sandra Rousseau P.Eng

DATE: Aoû 22, 2018

Mécanique Nordique
Plumbing
Heating
Ventillation
mecanique.nordique@hotmail.com

1255 Rue J.A.Bombardier
Lévis, Québec
G7A 2P4
Téléphone: 418-496-1109
Télécopieur: 418-496-3803

IQALUIT WWTP UPGRADE

DRAWING FOR APPROVAL

Ingineer : NUNAMI STANTEC

DRAWING #: AD-027R2

Section	:	22 07 20	23 07 19	23 07 13
Article	:	2.2,2.4,2.5	2.2,2.4,2.6	2.2 2.3 2.4
Plans	:	ALL		
Application	:	Insulation	Plumbing	Heating D
Brand	:	Johns Manville	Certainteed	3M Venture tape
Model	:			
Revised #	:	1		
Supplyer	:	Hd Nunavik		

Pages incl. : 12
Date : **2018-08-22**
By : **Mécanique Nordique Inc.**

STANTEC PROJECT #: 110126045

SUBMITTAL # AD-027R2

This review by Stantec is for general conformance with the design concept of Stantec's design of the:

☐ Architectural ☐ Structural ☑ Mechanical ☐ Electrical ☐ Other

Stantec

component(s) only and does not mean that Stantec has verified or approves the shop drawing(s). The Contractor remains solely responsible for the shop drawing(s) and this review by Stantec does not relieve the Contractor of the Contractor's responsibility for errors or omissions in the shop drawing(s) or for meeting all requirements of the contract documents. This review does not mean that Stantec approves the detailed design inherent in the shop drawing, responsibility for which shall remain with the Contractor submitting same, nor does this review mean that Stantec accepts any deviation of the shop drawing(s) from the contract documents. The Contractor is responsible for confirming all dimensions and correlating them at the job site, for all construction means, methods and techniques, and for coordination of construction work of all trades, including coordination of all shop drawings.

☐ REVIEWED
☑ REVIEWED, AS NOTED
☐ REVISE AND RESUBMIT
☐ NOT REVIEWED

DATE 2018-08-27

BY Brendan Zrum, P.Eng

Johns Manville

Micro-Lok®

Fiber Glass Pipe Insulation

Description

Micro-Lok fiber glass pipe insulation is made from glass fibers bonded with a thermosetting resin and produced in 36" (0.92 m) lengths. Jacketed with a reinforced vapor retarder facing and a factory-applied, longitudinal acrylic adhesive closure system, Micro-Lok is designed for application temperatures from 0°F to 850°F (-18°C to 454°C). Section joints are sealed with butt strips which are supplied from the factory. **Micro-Lok AP-T Plus** may be painted with a latex paint after installation.

The factory-installed tape system permits installation at ambient temperatures down to 15°F (-9°C), and will not soften or separate when exposed to high ambient temperatures and humidity.

Uses

Micro-Lok fiber glass pipe insulation is suitable for installation over hot, cold, concealed and exposed piping systems with operating temperatures up to 850°F (454°C). Weather-protective jacketing is required for outdoor applications. Pipes operating below ambient temperatures require all joints to be sealed with the factory-applied, self-seal lap and butt strips.

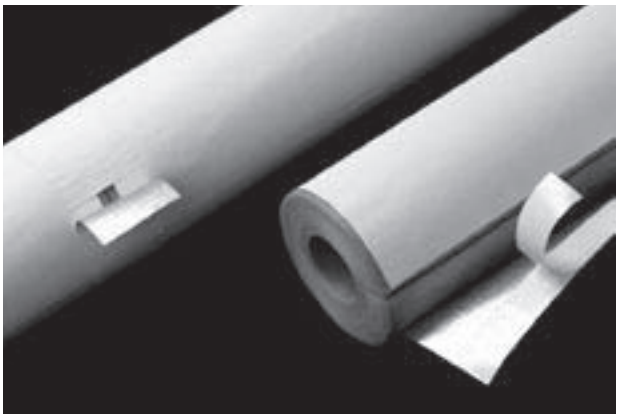

Operating Temperature Limits: 0°F to 850°F (-18°C to 454°C)

Specification Compliance

ASTM C 1136 (Jacketing) (Replaces HH-B-100B, Type I & II)
ASTM C 547 Type I (Replaces HH-I-558B, Form D, Type III, Class 12, Class 13 up to 850°F [454°C])
MIL-I-22344C
New York City MEA # 330-85-M
NFPA 90A & 90B, FHC 25/50

Physical Properties

Service Temp. Range	0°F to 850°F (-18°C to 454°C)
Moisture Sorption	<0.2% by volume
Alkalinity	<0.6% expressed as Na_2O
Corrosivity	Does not accelerate
Capillarity	Negligible (after 24 hours)
Shrinkage	None
Fungi & Bacteria Resistance	Does not breed or promote
Surface Burning Characteristics	Composite FHC 25/50 per ASTM E 84, UL 723, NFPA 255, CAN/ULC S102-M88
Limited Combustibility	NFPA 259
Jacketing	ASTM C 1136 (Type I)
Water Vapor Permeance (ASTM E 96 - Procedure A)	.02 perms max.
Beach Puncture (ASTM D 781)	50 oz. in./in. (58 SI) tear min.
Tensile Strength (ASTM D 828)	45 lbs./in. (7.9N/mm) width min. (MD) 30 lbs./in. (5.23N/mm) width min. (CD)

Thermal Conductivity ("k")

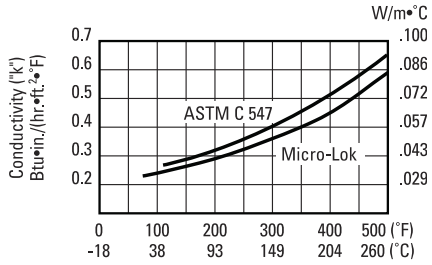

Mean Temperature	°F	75	100	200	300	400	500
	°C	24	38	200	149	204	260
Btu•in/(hr•ft²•°F)		.23	.24	.29	.36	.45	.59
W/m•°C		.033	.035	.042	.052	.065	.085

ASTM Test Methods & Guidelines

C 356.....Linear Shrinkage
C 411.....Hot Surface Performance
C 547.....Pipe Insulation
C 585.....Simplified Dimensional Standards for Nesting [Except $^3/_4$" (20 mm) IPS, 1" (25 mm) IPS, and $1^5/_8$" (41mm) CT]
C 1136.....Vapor Barrier Jacketing (Type I)

Micro-Lok®

Fiber Glass Pipe Insulation

22 07 20 2.2

23 07 19 2.2

Size Availability

Insulation Thickness		Iron Pipe Size Range		Copper Tubing Size Range	
in.	mm	in.	mm	in.	mm
1/2	13	1/2 - 18	13 - 457	5/8 -12 1/8	16 - 308
1	25	1/2 - 18	13 - 457	5/8 -12 1/8	16 - 308
1 1/2	38	1/2 - 18	13 - 457	5/8 -12 1/8	16 - 308
2	51	1/2 - 18	13 - 457	5/8 -12 1/8	16 - 308
2 1/2*	64	1/2 - 18	13 - 457	5/8 -12 1/8	16 - 308
3*	76	1/2 - 18	13 - 457	5/8 -12 1/8	16 - 308

* Contact the nearest Regional Sales Office for availability.

Qualifications for use

A sufficient thickness of insulation must be used to keep the maximum surface temperature of Micro-Lok AP-T Plus below 150°F (66°C). In addition, at operating temperatures above 500°F (260°C), Micro-Lok pipe insulation must be applied in a thickness ranging from 2" (51 mm) minimum to 6" (152 mm) maximum.

During initial heat-up to operating temperatures above 350°F (177°C), an acrid odor and some smoke may be given off as the organic binders used in the fiber glass pipe insulation begin to decompose. When this occurs, caution should be exercised to ventilate the area well. This loss of binder does not directly affect the thermal performance of the pipe insulation, but the compressive strength and resiliency of the product are reduced. For applications with excessive physical abuse or vibration at high temperatures, consult your local Performance Materials Division territory manager for alternate material recommendations.

Application Recommendations.
AP-T Plus Jacket and Butt Strips.

1. Do not apply Micro-Lok insulation with AP-T Plus jacketing if air temperature is below 15°F (-9°C) or above 130°F (54°C) due to the effect of temperature on tape performance. We recommend stapling when application falls outside this temperature range.

2. If stored below 15°F (-9°C) or above 130°F (54°C), insulation cartons should stand within the recommended temperature range for 24 hours prior to application.

3. Once release paper is removed, both adhesive and lap must be kept free of dirt and water, and the lap sealed immediately.

4. When adhered, the lap and butt strips must be pressurized by rubbing firmly with a plastic squeegee or the back of a knife blade to assure positive closure.

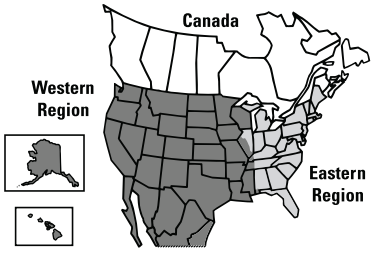

North American Sales Offices, Performance Materials Division

Eastern Region
P.O. Box 158
Defiance, OH 43512
(800) 334-2399
Fax: (419) 784-7866

Western Region and Canada
P.O. Box 5108
Denver, CO 80217
(800) 368-4431
Fax: (303) 978-4661

Outside North America
(303) 978-4655
Fax: (303) 978-2627

Johns Manville

Performance Materials Division
P.O. Box 5108
Denver, CO 80217-5108
www.jm.com

The physical and chemical properties of Micro-Lok® fiber glass pipe insulation represent typical, average values obtained in accordance with accepted test methods and are subject to normal manufacturing variations. They are supplied as a technical service and are subject to change without notice. Numerical flame spread and smoke developed ratings are not intended to reflect hazards presented by this or any other materials under actual fire conditions. Check with the Regional Sales Office nearest you to assure current information. **All Johns Manville products are sold subject to Johns Manville's Limited Warranty and Limitation of Remedy. For a copy of the Johns Manville Limited Warranty and Limitation of Remedy, call the 800 number below.** For information on other Johns Manville thermal insulations and systems and a copy of the Spec-Line® CSI formatted specification, call **1-800-654-3103**.

CI-34 1-05 (Replaces 5-04)

Copyright ©2005 Johns Manville
Printed in USA

Johns Manville

Zeston 2000® Series White PVC Insulated Fitting Covers and Jacketing

Features

- Protect insulated or bare pipes
- Meets most requirements for federal, state and local fire-safety codes
- Accepted for commercial, institutional, industrial and residential projects in all parts of the US
- System is uncomplicated and easy to install
- UV-resistant for outdoor applications
- Long-lasting protection and an attractive finished appearance
- Available with Hi-Lo Temp fiber glass inserts

Applications

- Commercial, institutional and industrial applications

Construction

- Covering and jacketing manufactured from high-impact, gloss white, UV-resistant polyvinyl chloride jacketing

Application Recommendations

- Wrap the Hi-Lo Temp fiber glass insert completely around the pipe fitting without overly compressing it or leaving any voids
- Ensure that the insulation insert covers all exposed surfaces
- Install the Zeston PVC fitting cover over the pipe fitting and fiber glass insert by securing the throat of the Zeston PVC insert using either serrated tacks, Perma-Weld adhesive or Zeston Z-Tape
- If applied in an outdoor setting or exposed to the sun, precautions should be taken to account for expansion joints



ZESTON 2000 SERIES WHITE PVC
INSULATED FITTING COVERS AND JACKETING

22 07 20 2.4
23 07 19 2.6

Johns Manville

Mechanical Insulations

Zeston 2000® Series White PVC Insulated Fitting Covers and Jacketing

Qualifications For Use

Hot Systems

- Use proper insulation thickness to ensure PVC covers are kept below 150°F (66°C)
- PVC covers should be kept away from contact with and/or exposure to sources of direct or radiated heat
- For fittings where operating temperatures exceed 250°F (121°C) or where pipe insulation thickness is greater than 1½" (38mm), two or more layers of Hi-Lo Temp insulation inserts are required beneath the fitting cover (refer to MECH-261 Zeston Hi-Lo Temp Inserts)

Cold Systems

- An approved vapor-barrier compatible with PVC must be applied between pipe insulation and fitting cover and on fitting cover throat overlap seal. Please refer to Insulspec MECH-261 on jm.com
- For fittings where operating temperature is below 45°F (7°C) or where the pipe insulation thickness is greater than 1½ " (38mm), two or more layers of Hi-Lo Temp insulation inserts are required beneath fitting cover (refer to MECH-261 Zeston Hi-Lo Temp Inserts)

Refrigerant Systems and Cold Systems In Severe Ambient Conditioning

- Mitered pipe insulation segments, fabricated or pre-molded insulation shapes may be used in lieu of Hi-Lo temp insulation inserts
- An intermediate vapor-barrier compatible with PVC is required to completely seaL the insulation prior to installing the Zeston 2000 PVC fitting cover
- Care should be taken to ensure the vapor barrier mastic is applied between the pipe insulation and the fitting cover and on the fitting cover throat overlap seam

Totally Sealed Systems (USDA Approval)

- 20 or 30 mil (0.5 mm or 0.8mm) Zeston PVC jacketing should be applied to pipe insulation in conjunction with Zeston PVC fitting covers
- Circumferential and longitudinal jacket and fitting cover seams should be sealed with Zeston Perma-Weld solvent welding adhesive
- Circumferential seams should be a minimum of 1" (25mm) overlap and longitudinal seams should be 1½"- 2" (38mm to 51mm) overlap
- Upon completion, all seams should visually be checked for seal and, if necessary, touched up
- Slip joints are periodically required between fixed supports and on continuous long runs of straight piping.
- To implement a slip joint, increase the circumferential overlap to 8" to 10" (203 mm to 254 mm) and apply a flexible white caulking in the overlap area to maintain a sealed system
- Refer to Zeston installation instructions CI-35 at www.jm.com

Performance Specifications

Electrical Conductance	Non-conductor
Elongation at Yield (MD), %	3.0
Flame Spread	25 or less (up to 30 mil [0.8mm])
Flexural Modulus, psi (kPa)	430,000 (2,964,750)
Flexural Strength, psi (kPa)	11,000 (75,850)
Gardner – SPI Impact, in.lb./mil by Ductile Failure	10 mil (0.3 mm)1.3 15 mil (0.4 mm) 1.4 20 mil (0.5 mm) 1.5 30 mil (0.8 mm) 1.6
Smoke Developed	50 or less (up to 30 mil [0.8 mm])
Specific Gravity	1.48
Tensile Modulus, psi (kPa)	425,000 (2,930,270)
Tensile Strength at Yield, psi (kPa)	6,000 (41,370)

Specification Compliance

ASTM	D257 (Electrical surface resistance)
	D638 (Tensile strength)
	D790 (Flexural Strength)
	D792 (Density & specific gravity)
	D1784 (Specification for rigid PVC)
	D3679 (Specification for rigid PVC)
	E84 (Surface burning characteristics)
	E136 25/50 non-combustibility (fiber glass inserts)
Agriculture Canada	Pass (Canada Department of Agriculture)
Canada	CGSB51-GP-53M
CAN/ULC	S102
L-P*: Composition	535E (Federal standard for PVC)
A, Type II, Grade GU	1035A (US Army standard PVC)
New York City MEA	#7-87 (Toxicity test)
USDA	US Department of Agriculture

Compressed Thermal Conductivity Zeston Hi-Lo Temp Insulation Inserts

Mean Temperature		"K"	
°F	°C	BTU•in/(hr•ft²•°F)	W/M•°C
75	24	0.23	0.033
150	66	0.27	0.039
300	149	0.40	0.058

FOR ADDITIONAL INFORMATION CONSULT THE FULL PRODUCT MANUAL.

The physical and chemical properties of PRODUCT listed herein represent typical, average values obtained in accordance with accepted test methods and are subject to normal manufacturing variations. They are supplied as technical service and are subject to change without notice. Numerical flame spread and smoke developed ratings are not intended to reflect hazards presented by these or any other materials under actual fire conditions. Check with the Regional Sales Office nearest you to assure current information. **All Johns Manville products are sold subject to Johns Manville's standard Terms and Conditions including Limited Warranty and Limitation of Remedy. For a copy of the Johns Manville standard Terms and Conditions, Limited warranty and Limitation of Remedy, and information on other Johns Manville thermal insulations and systems, call (800)-654-3103Limited Warranty and Limitation Remedy. For a copy of the Johns Manville standard Terms and Conditions, Limited Warranty and Limitation of Remedy, and information on other Johns Manville thermal insulations and systems, call (800) 654-3103.**

22 07 20 2.4

23 07 19 2.6

PROTO FITTING COVERS

25/50 RATED
PER ASTM E-84 — LoSMOKE® PVC

SUBMITTAL SHEET

Effective: 05/01/07

Submitted Date: _____

PROTO REGULAR PVC
LoSMOKE® PVC JACKETING

PROTO CORP.
10500 47th Street North
Clearwater, FL 33762-5017
Tel: (727) 573-4665
Fax: (727) 572-6823
Toll Free (800) 875-7768

PVC FITTING COVERS, PRE-MOLDED, INSULATED
WHITE GLOSS FINISH — INDOOR OUTDOOR GRADE

SUBMITTAL SHEET DOES NOT SUPERCEDE WRITTEN SPECIFICATIONS OR OWNER AGREEMENT.

DESCRIPTION

The Proto Fitting Cover System consists of one piece and two piece pre-molded high impact LoSMOKE® PVC fitting covers with fiberglass inserts and accessories, which include elbows, tee/valves, end caps, mechanical line couplings, specialty fittings, white and indoor color jacketing, Protop® Tank End Panels, tack fasteners, tapes and specialty items.

APPLICATIONS

The Proto Fitting Cover System is used to insulate mechanical piping systems at fitting locations and provide a PVC jacketing for straight run piping. Both give a quality appearance and have excellent durability.

FEATURES AND BENEFITS

25/50 Rated. All Proto PVC Fittings are made of LoSMOKE® grade PVC. Roll Jacketing is available in either 25/50 rated or regular PVC Grade (not 25/50 rated). The 25/50 products meet fire and smoke safety requirements of federal, state and local building codes.

Excellent Appearance. Bright high-gloss white coloring adds a distinct quality appearance to the system. The standard line of Proto Fitting Covers are made in LoSMOKE® PVC designed for indoor and outdoor use. Virtually all sizes pass 25/50 when made of LoSMOKE® PVC. Colored PVC is manufactured from a LoSMOKE® formula that is suitable for indoor use only.

Easy To Clean. Due to the smooth, high gloss finish on Proto PVC Fittings, the product cleans easily with soap and water. This makes the system ideal for food and drug facilities.

Low Cost Installation. Significant cost savings vs. conventional cement, molded sections, and mitered sections.

Fast and Easy. At fitting locations, wrap the fiberglass insert around the pipe fitting, apply the Proto PVC Fitting over the insert and tack or tape in place. Do not use tacks where a vapor retarder is applied.

Wide Temperature Range. May be used for mechanical piping systems operating from -20°F to +140°F surface temperature of insulation. Variety: LoSMOKE®, Indoor/Outdoor, Exod®, Exotuff®. Proto products are also available in LoSMOKE® Indoor colors. Exod® is CPVC, GOOD TO 225° F.

Long Lasting. Can be used more than once on retrofit projects, general maintenance.

Excellent Thermal Value. K value of .26 at 75°F (.037 W/m °C at 24°C) of fiberglass insert, mean temperature assures better thermal efficiency than conventional cement fittings.

Resistance To Fungi and Bacteria. (ASTM G 21, ASTM G 22) Does not promote growth of fungi or bacteria.

U.V. Resistant. Can be used on indoor or outdoor applications, for both (White) LoSMOKE® PVC and Regular PVC. Extra thick fitting covers should be used outdoors. (All Std. Proto Fitting covers are made of LoSMOKE® PVC.)

TECHNICAL PHYSICAL PROPERTIES OF PVC LoSMOKE® MATERIALS

Specific Gravity (ASTM D-792) 1.41
Tensile Modulus, PSI (ASTM D-638) . . . . . .361,000 (25,380 kg/cm²)
Tensile Strength, PSI (ASTM D-638) 6,011
Flexural Strength, PSI (ASTM D-790) 9,396
Izod Impact (1/4") ft. lb./in (ASTM D-256) 3.7
Heat Deflection Temp. (ASTM D-648) . . . . . .157°F (70°C)
at 264 PSI (8.95 kg/cm²), °F
VICAT Softening Temp. (ASTM D-1525) . . . . . .198°F (92°C)

Water Vapor Transmission
ASTM E 96-95
70°F & 50% Relative Humidity
.015" thick = .058
.020" thick = .047
.030" thick = .027

Surface Burning Characteristics of All Fitting Covers and Jacketing
LoSMOKE® PVC . . . . . .passes 25/50 ASTM-E 84
Up to .035" Thk.
Puncture Resistance (ASTM D 781) . . .006" thick = 178 Beach Units
.015" thick = 221 Beach Units

FEDERAL SPECIFICATIONS COMPLIANCE—

POLY VINYL CHLORIDE — ASTM 1784-92

LP-1035A Type II Grade GU and Type III

LP-535E Type II Grade GU and Type III

United States Department of Agriculture Authorized
Agriculture Canada Authorized
New York City MEA 243-84-M, Chicago, Los Angeles ASTM C-585-76 (sizes)
Canada CAN/CGSB - 51.53-95

TECHNICAL PROPERTIES OF FIBERGLASS INSERT MATERIAL

Thermal Conductivity (ASTM C 177)

Mean Temperature –	°F	"k" — BTU in/hr. Ft.2 °F
HH-I-558 Form B	75° 1(24°C)	.26 (.037 W/m. °C)
Type 1 Class B	150° 1(66°C)	.33 (.048 W/m. °C)
	250° (121°C)	.44 (.063 W/m. °C)

APPLICATION AND SPECIFICATION GUIDELINES

A. STORAGE

Protect cartons from water damage or other abuse. Proto Fitting Cover cartons are not designed for outside storage.

B. PREPARATION

Proto Fitting Covers should be applied on clean, dry surfaces.

C. APPLICATION

1. **General:** The matching fiberglass insert shall be wrapped completely around the metal fitting leaving no voids. Loose wrappings of twine is helpful in shaping difficult surfaces. The Proto Fitting Cover shall then be applied over the fitting and insert, and the throat secured by either tack fastening or taping.

2. **Cold Pipe:** Fitting systems below ambient temperature must have a continuous vapor retarder or vapor retardant mastic as specified by the engineer. When using Proto PVC Tape, a 2" (51mm) minimum downward overlap is recommended for optimum performance. Care should be taken not to stretch the last 2" (51mm) of Proto PVC Tape, to avoid stretching or creeping.

3. **Hot Pipe:** Insulate as per General Instructions given above. Due to PVC softening point at approximately 159°F (70.6°C), care should be taken to ensure sufficient insulation thicknesses are applied.

For hot piping which requires Pipe Insulation over 1 1/2" (38 mm) wall thickness, an extra fiberglass insert shall be applied for each additional inch of pipe insulation wall thickness. Proto recommends the surface temperature of the Pipe Insulation and PVC to be no higher than 125°F (52°C). To complete application of Proto PVC Fittings on hot piping, the throat seam shall be tack fastened or taped. Seal all laps outdoors and in wash down areas.

CAUTION: During initial heat-up to operating temperatures above 350°F, (177°C) an acrid odor and some smoke may be given off as a portion of the bonding material used in the insulation begins to undergo a controlled decomposition. If natural convection is not adequate in confined areas, forced ventilation should be provided in order to protect against any harmful fumes and vapors that might be generated.

4. **Outdoor Pipe:** Insulate as per above instructions.

Minimum Proto PVC Jacketing thickness for outdoor applications should be .030" (.7 mm). Over 15" O.D., .040 is recommended. Under 3 1/8" O.D., .020 is permitted. The PVC Jacketing shall be overlapped a minimum of 2" (51 mm) on the down side so as to shed water. All long and round joints shall be completely weather sealed with caulk adhesive.

On all piping, insulation shall be of sufficient thickness to keep the surface temperature below 125°F (52°C). Additionally, a slip type expansion joint of 8" (202 mm) minimum width shall be applied at least every 25 lineal feet (6.1 lineal meters) and between fittings.

Painting: Painting must be done only after priming the PVC surface with a suitable primer, such as X-1-M 400W Primer, or a similar, approved product.

Outdoor Painting: Only over White Exotuff® 195°F deflection temp. (modified PVC) or EXOD™225°F deflection temp. CPVC after X-1-M primer, or a similar, approved product. Use PVC compatible paints without strong solvents. Test paint a section before proceeding.

5. **CAUTION:** Fiberglass may cause temporary skin irritation. Wear long-sleeved, loose-fitting clothing, head covering, gloves and eye protection when handling and applying material. Wash with soap and warm water after handling. Wash work clothes separately and rinse washer. A disposable mask designed for nuisance type dusts should be used where sensitivity to dust and airborne particles may cause irritation to the nose or throat.

D. HEAVY INDUSTRIAL APPLICATIONS OUTDOORS

Use .030" or higher PVC Jacketing. Use "heavy duty" two piece fitting covers made from minimum .030" thick to .050" thick PVC sheet depending on size of fitting cover. Jacketing to be cut and oven precurled

E. FIRE TEST RESULTS: PROTO LoSMOKE® — PVC

USA: E-84 25/50 Rated up to .035" thick (The Best Rated PVC)

CANADA: Conforms to CAN 4-S102.2

LoSMOKE® fitting covers conform to virtually all city, state and federal codes, for use in hotel, commercial and industrial buildings.

LoSMOKE® fitting covers will be labeled on the box "Passes ASTM E-84." Flame spread 25; smoke developed 50".

All E-84 ratings shown here were tested on flat sheets from which fitting covers are made.

Virtually all Proto LoSMOKE® fitting covers will pass E-84 25/50 flame spread and smoke development rating requirements.

SUGGESTIONS

Slide Joints: Do not apply PVC Jacketing too tightly. Slide joints plus PVC thickness must work together to prevent cracks and puckering.

Caulk/Adhesives:
Use: Celulon® (Red Devil Inc.) water base "Ultra Clear".
Service temp. -25°F to +175°F

PVC Cement: Avoid use if possible. Heavy application can cause puckering and cracks. Learn how to use it sparingly.

Vapor Retarder: A vapor retarder is required under all fitting covers for systems operating below ambient temperatures, such as chilled water lines, and is recommended for all outdoor applications. The fitting vapor retarder should provide a continuous seal with the adjacent pipe vapor retarder.

Outdoor Fitting Covers: Use extra thick, plastic heavy duty covers.

Outdoor and Indoor Washdown Areas: Use EXOD™ (CPVC) by Proto, for its higher deflection temperature (225°F). It is light grey.

PVC Outdoor Thickness (Reg. PVC Jacketing): Use .030" thick cut and oven precurled jacketing. Use "heavy duty" plastic fitting covers formed from minimum .030" to .050" thick PVC sheet depending on size of fitting cover. On pipe insulation larger than 15" O.D. use .040" thick PVC.

PVC Indoor Thickness: Use white or indoor color LoSMOKE® on piping. Use .020" thick with standard one piece fitting cover, .030" jacketing can also be used.

Vessels and Tank Tops: Use .050" or .060" thick tank panels for outdoor applications and .030" or .040" for indoor tanks. Use .050" thick Protop® segments for tank heads. (Only Proto Corp. has them.) Made of LoSMOKE® PVC.

Pipe Insulation End Caps: Use on all outdoor, indoor washdown areas, and all vapor sealed systems. End caps will be PVC, metal, or gasket materials appropriate for the metal pipe temperatures. Silicone rubber (500°F) can be applied (min. 1/16" thick) as an end cap outdoors.

Indoor hot piping need not be sealed to the end cap. Cap will be sealed or taped to the jacket.

Two-Ply Waterproofing System: Use .010" thick PVC with self-sealing long lap tape, as the first waterproof layer. Overlap ends 3" and PVC tape over. Caulk all openings with Celulon® or similar, approved product. The finished jacketing material should employ staggered joints with at least a .010 mil thick first layer. Recaulk again over last layer. Install slide joints every 25', caulk shut all other seams, openings, or end overlaps with PVC tape or caulk. Use vapor seal jacketing (instead of .010" thick PVC first layer) where a vapor seal system is required.

CPVC-High Chemical Resistance and High Deflection Temperature: Use "Exod®" CPVC jacketing and fitting covers for 225°F deflection temperature and maximum chemical resistance. Offered only by Proto Corp. as a substitute for stainless steel.

Regular PVC Jacketing Outdoors: Use regular PVC jacketing outdoors. It is less expensive, does the same job as LoSMOKE® PVC. Regular PVC has very good fire (self-extinguishing) properties — not as good as the LoSMOKE® PVC used in confined people areas (buildings), however much better than common plastics used outdoors.

Vessels with ends 24" O.D. or larger: Use .040" thick jacketing up to 48" O.D. On sides of vessels larger than 48" O.D. See Protop® brochure for instructions requiring a suspended band system, to hang panels from, (Gerrard & Company or equal). Use thick PVC panels on Outdoor Tanks not PVC Roll Jacketing. See Tank Tops above for end segments.

PROTO PVC CORP™

10500 47th Street North
Clearwater, FL 33762-5017
Tel: (727) 573-4665
Fax: (727) 572-6823
Toll Free (800) 875-7768

The physical and chemical properties of Proto Corp. PVC represent typical average values obtained in accordance with accepted test methods and are subject to normal manufacturing variations. They are supplied as a technical service and are subject to change without notice. Numerical flame spread rating is not intended to reflect hazards presented by this or any other materials under actual fire conditions. Check with Proto Corp. office to assure current information. Purchaser will be responsible to determine suitability of this product for purchaser's use. Proto Corp. liability will be limited to the purchase price of the material. No person is authorized to alter this without a Proto Corp. officer's written approval.

23 07 13 2.2

Specification Sheet

CertainTeed
SAINT-GOBAIN

CertaPro™ Commercial Board

1. PRODUCT NAME

CertaPro™ Commercial Board

2. MANUFACTURER

CertainTeed Corporation
P.O. Box 860
Valley Forge, PA 19482-0105
Phone: 610-341-7000
800-233-8990
Fax: 610-341-7571
Website:
www.certainteed.com/insulation

3. PRODUCT DESCRIPTION

Basic Use: CertaPro Commercial Board is used where board stiffness properties are required and also functions as an exterior insulation when covered with a weather barrier. Commercial Board is used in exterior curtain walls, interior walls and floor/ceiling assemblies, and as an exterior insulation on HVAC ducts and plenums or in constructions where framing is not present. It is also used as thermal insulation on tanks and vessels.

AVAILABLE SIZES/THERMAL PERFORMANCE

Product Type	Thickness		Density		Thermal Resistance		Thermal Conductivity	
	in.	mm	Lb/ft³	Kg/m³	R	RSI	Btu•in / h•ft²•°F	W / m•°C
CB 110	1-1/2	38	1.1	17.57	6.0	1.06	0.25	0.036
	3-1/2	89	1.1	17.57	14.0	2.47	0.25	0.036
	6	153	1.1	17.57	25.0	4.20	0.25	0.036
CB150	1-1/2	38	1.50	24	6.0	1.06	0.25	0.036
	2	51	1.50	24	8.0	1.41	0.25	0.036
	2-1/2	64	1.50	24	10.0	1.76	0.25	0.036
	3	76	1.50	24	12.0	2.11	0.25	0.036
	3-1/2	89	1.50	24	14.0	2.47	0.25	0.036
	4	102	1.50	24	16.0	2.82	0.25	0.036
CB180	1-1/2	38	1.50	24	6.0	1.06	0.24	0.035
	2	51	1.50	24	8.0	1.41	0.24	0.035
	2-1/2	64	1.50	24	10.0	1.76	0.24	0.035
	3	76	1.50	24	12.0	2.11	0.24	0.035
	3-1/2	89	1.50	24	14.0	2.47	0.24	0.035
	4	102	1.50	24	16.0	2.82	0.24	0.035
CB 225	1	25	2.25	36	4.2	0.73	0.24	0.035
	1-1/2	38	2.25	36	6.3	1.10	0.24	0.035
	2	51	2.25	36	8.3	1.47	0.24	0.035
	2-1/2	64	2.25	36	10.4	1.83	0.24	0.035
	3	76	2.25	36	12.5	2.19	0.24	0.035
	3-1/2	89	2.25	36	14.6	2.56	0.24	0.035
	4	102	2.25	36	16.6	2.91	0.24	0.035
CB 250	1	25	2.50	40	4.2	0.73	0.24	0.035
	2	51	2.50	40	8.3	1.47	0.24	0.035
CB 300	1	25	3.00	48	4.3	0.77	0.23	0.033
	1-1/2	38	3.00	48	6.5	1.15	0.23	0.033
	2	51	3.00	48	8.7	1.53	0.23	0.033
	2-1/2	64	3.00	48	10.9	1.92	0.23	0.033
	3	76	3.00	48	13.0	2.30	0.23	0.033
	3-1/2	89	3.00	48	15.2	2.68	0.23	0.033
	4	102	3.00	48	17.4	3.06	0.23	0.033
CB 450	1	25	4.50	72	4.5	0.80	0.22	0.032
	2	51	4.50	72	9.1	1.60	0.22	0.032
CB 600	1	25	6.00	96	4.5	0.80	0.22	0.032
	1-1/2	38	6.00	96	6.8	1.20	0.22	0.032
	2	51	6.00	96	9.1	1.60	0.22	0.032

All/Service/Jacket (ASJ facing) is not available in Type CB 150.
CB 110, 150 and 600 are not available in FSK, WMP or ASJ facings.

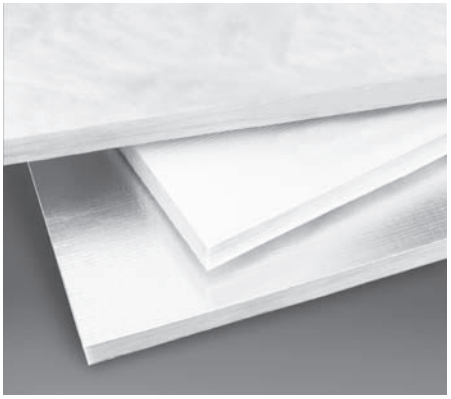

Benefits: CertaPro Commercial Board provides high sound absorption and excellent thermal performance. This product contains a minimum of 60% recycled content. The product is offered in a variety of stiffness properties from flexible to rigid and all can be easily cut, handled, fabricated and installed. The vapor retarder facing provides abuse resistance. The ASJ and FSK facings provide vapor retarder performance and a Class A surface that may be left exposed.

Composition and Materials: The product is composed of glass fibers bonded together with a thermoset binder. It is available unfaced or with a foil-scrim-kraft (FSK) or white kraft-scrim-foil (ASJ) facing adhered to the fiber glass board.

Limitations: Insulation should be kept clean and dry at all times.

Sizes: See table to the left. Contact CertainTeed for other sizes and minimum order quantities.

4. TECHNICAL DATA

Applicable Standards

- Model Building Codes:
  - ICC
  - New York City
    MEA 35-79-M
  - California Quality Standards
    Reg. No. CA-T024 (PA)
  - City of Los Angeles, RR 8148
- Material Standards:
  - CAN/ULC S-702, Type I
  - ASTM C553
    CB 150, Type I, II & III
  - ASTM C612
    CB 150 & CB 225, Type IA
    CB 300 & CB 600, Types IA & IB
  - CAN/CGSB-51.10-92
    CB 150 & CB 225, Type II, Class II
    CB 300 & CB 600, Type I, Class II

Fire Resistance:

- Fire Hazard Classification:
  - ASTM E84, UL 723

23 07 13 2.2

– CAN/ULC-S102
Max. Flame Spread Index: 25
Max Smoke Developed Index: 50
- Limited Combustible:
  – NFPA 259
  ≤ 3,500 Btu/lb

Physical/Chemical Properties:

- Thermal Performance:
  – ASTM C177 or ASTM C518
  See table at left
- Acoustical Performance:
  – ASTM C423
  See table on other side
- Operating Limits:
  – Temperature (ASTM C411):
  Max. 250°F (121°C) (Faced)
  Max. 450°F (232°C) (Unfaced)
- Water Vapor Permeance:
  – ASTM E96, Dessicant Method
  Max. 0.02 perms
  (1.15 x 10^{-9} g/Pa•s•m^2)
  (ASJ and FSK Facing)
- Water Vapor Sorption:
  – ASTM C1104
  ≤ 5% by weight
- Corrosiveness (ASTM C665):
  – Pass
- Fungi Resistance (ASTM C1338):
  – Pass
- Odor Emission (ASTM C1304):
  – Pass

5. INSTALLATION

Exterior Walls – The faced side of the board should be installed toward the interior side of the structure, except in warm and humid areas where local code regulations may require a vapor retarder to face toward the exterior.

ACOUSTICAL PERFORMANCE

Type	Thickness		Absorption Coefficients @ Octave Band Frequency (Hz)						NRC
	in	mm	125	250	500	1000	2000	4000	
CB 110	1-1/2	38	0.25	0.51	0.85	0.97	1.00	1.03	0.85
	3-1/2	89	0.55	1.15	1.29	1.18	1.14	1.18	1.20
	6	153	1.09	1.45	1.26	1.13	1.11	1.10	1.25
CB 150	1-1/2	38	0.19	0.51	0.82	0.86	0.95	0.97	0.80
	2	51	0.23	0.61	0.94	0.97	0.98	0.96	0.90
	2-1/2	64	0.41	0.78	0.96	0.94	0.93	0.97	0.90
	3	76	0.41	0.94	1.07	1.01	1.00	0.97	1.00
	3-1/2	89	0.60	1.08	1.09	1.02	1.04	1.06	1.05
	4	102	0.64	1.05	1.07	0.97	0.96	1.01	1.00
CB 180	2-1/2	64	0.41	0.89	1.22	1.24	1.16	1.18	1.15
CB 225	1	25	0.06	0.30	0.68	0.85	0.91	0.94	0.70
	1-1/2	38	0.12	0.48	0.83	0.90	0.90	0.89	0.80
	2	51	0.22	0.63	1.04	1.00	1.00	0.97	0.90
	2-1/2	64	0.31*	0.81*	1.08*	1.02*	1.04*	1.03*	1.00*
	3	76	0.34	0.95	1.08	0.99	0.98	0.99	1.00
	3-1/2	89	0.54	1.11	1.12	1.01	1.02	1.00	1.05
	4	102	0.70	1.15	1.12	0.99	1.01	1.08	1.05
CB 250	1	25	0.05	0.25	0.66	0.98	1.04	1.07	0.75
	2	51	0.21	0.79	1.21	1.14	1.09	1.07	1.05
CB 300	1	25	0.08	0.25	0.72	0.88	0.93	0.94	0.70
	1-1/2	38	0.10	0.51	0.89	0.95	0.92	0.93	0.80
	2	51	0.21	0.73	1.08	1.04	1.04	0.96	0.95
	2-1/2	64	0.31	0.81	1.08	1.02	1.04	1.03	1.00
	3	76	0.41	0.96	1.13	1.03	1.03	1.02	1.05
	3-1/2	89	0.72	1.14	1.11	1.00	1.02	1.00	1.05
	4	102	0.75	1.18	1.09	1.00	1.00	1.02	1.05
CB 450	1	25	0.09	0.33	0.79	1.06	1.07	1.06	0.80
	2	51	0.32	0.95	1.19	1.11	1.04	1.02	1.05
CB 600	1	25	0.05	0.27	0.78	0.97	0.97	0.91	0.75
	1-1/2	38	0.17	0.50	0.98	1.03	0.99	0.98	0.90
	2	51	0.31	0.89	1.07	0.99	1.02	0.98	1.00

* Estimated sound absorption coefficents and NRC.
Sound absorption tested in accordance with ASTM C423 using Type A mounting per ASTM E795.

Curtain Walls – CertaPro Commercial Board is applied to spandrel and pre-cast concrete panels with approved adhesives or mechanical fasteners. Boards may also be installed using hat channels or Z studs. Where a vapor retarder is required, all joints, seams and penetrations must be sealed. Exterior applications require the insulation to be covered with appropriate weather barrier finish in addition to the factory-applied vapor retarder facing. Choice of finish depends on mechanical abuse, weather exposure and appearance requirements.

HVAC/Mechanical – All fabrication, application and installation steps should be in accordance with the requirements of the National Commercial and Industrial Installation Standards (current edition) published by the Midwest Insulation Contractors Association (MICA).

These installation recommendations are general in nature. Other methods are acceptable. Please consult your contractor for recommendations best suited to the application.

6. AVAILABILITY AND COST

Manufactured and sold throughout the United States and Canada. For availability and cost, contact your local contractor, distributor or call CertainTeed at 800-233-8990.

7. WARRANTY

Refer to CertainTeed Limited Warranty for Commercial Insulation (30-25-034). Inasmuch as CertainTeed has no control over the installation design, installation workmanship, accessory materials or conditions of application, CertainTeed does not warrant the performance or results of any installation containing its products.

8. MAINTENANCE

An inspection and preventative maintenance program for the insulation and vapor retarder system is recommended to ensure optimum performance.

9. TECHNICAL SERVICES

Technical assistance can be obtained either from the local CertainTeed sales representative, or by calling Sales Support Group at 800-233-8990.

10. FILING SYSTEMS

- CertainTeed Pub. No. 30-25-056
- Additional product information available upon request.

Seal and Insulate with ENERGY STAR — LEARN MORE AT energystar.gov

NAIMA

GREENGUARD Children & Schools — Indoor Air Quality Certified

U.S. GREEN BUILDING COUNCIL MEMBER

ENERGY STAR AWARD 2010 — PARTNER OF THE YEAR

ASK ABOUT OUR OTHER CERTAINTEED PRODUCTS AND SYSTEMS:

EXTERIOR: ROOFING • SIDING • WINDOWS • FENCE • RAILING • TRIM • DECKING • FOUNDATIONS • PIPE
INTERIOR: INSULATION • GYPSUM • CEILINGS

CertainTeed Corporation
P.O. Box 860
Valley Forge, PA 19482

Professional: 800-233-8990
Consumer: 800-782-8777
www.certainteed.com/insulation

CertainTeed SAINT-GOBAIN

Code No. 30-25-021, © 05/10 CertainTeed Corporation.

23 07 13 2.3

sustainable insulation

Specification Sheet

Acceptable where specifications allow type C2 insulation

CertainTeed
SAINT-GOBAIN

SoftTouch™ Duct Wrap Insulation

Product Name	CertainTeed SoftTouch™ Duct Wrap Insulation
Manufacturer	CertainTeed Corporation
Address	P.O. Box 860 Valley Forge, PA 19482-0105
Phone	610-341-7000 • 800-233-8990
Fax	610-341-7571
Website	www.certainteed.com/insulation

PRODUCT DESCRIPTION



Basic Use: SoftTouch™ Duct Wrap Insulation is used to insulate rectangular and round heating, ventilating and air conditioning ductwork.

Benefits: SoftTouch Duct Wrap Insulation provides thermal efficiency that reduces unwanted heat loss or gain from equipment and ductwork. When properly installed in the correct thickness, this product virtually eliminates condensation problems on cold duct surfaces.

Composition and Materials: SoftTouch Duct Wrap is a blanket-type insulation composed of tan, uniformly textured, inorganic fibrous glass formed with a formaldehyde-free plant-based binding agent. It is available unfaced or with FSK, gray PSK or white PSK vapor retarder facing. On faced products, a stapling/taping tab is provided on one edge.

Limitations: The product should be kept clean and dry from the time of manufacture through job site installation and system operation.

SoftTouch Duct Wrap is suitable for use with most heating, ventilating and air conditioning ductwork operating at temperatures from 35°F to 250°F (1.7°C to 121°C) for faced SoftTouch Duct Wrap, and from 35°F to 450°F (1.7°C to 232°C) for unfaced SoftTouch Duct Wrap.

Sizes: See table on back for available sizes. Contact CertainTeed for other sizes and minimum order quantities.

INSTALLATION

Sheet metal ducts must be clean, dry and sealed tightly prior to insulating with CertainTeed SoftTouch Duct Wrap.

To ensure installed thermal performance, CertainTeed SoftTouch Duct Wrap must be cut to "stretch-out" dimensions. This requires measurement of the duct perimeter, then cutting the duct wrap to the dimensions (perimeter + add-on) indicated in the stretch-out table on the other side. A 2" piece of insulation is removed from the facing at the end of the piece of insulation to form an overlapping stapling and taping flap.

CertainTeed SoftTouch Duct Wrap is installed by wrapping the insulation around the perimeter of the duct with the facing out. Adjacent sections of duct wrap are tightly butted with the 2" taping flap overlapping. Seams must be stapled with outward-clinching staples on approximately 6" centers. When a vapor retarder is required, all seams, joints, tears, punctures and/or other penetrations of the duct wrap must be sealed with a pressure sensitive vapor retarder tape that matches the facing, or a suitable mastic system.

Where rectangular ducts are 24" in width or greater, CertainTeed SoftTouch Duct Wrap must be additionally secured to the bottom of the duct with mechanical fasteners spaced 18" on center to prevent sagging.

For additional installation details, consult the National Commercial and Industrial Insulation Standards (current edition) published by the Midwest Insulation Contractors Association (MICA).

AVAILABILITY AND COST

Manufactured in U.S.A. Available in select Western U.S./Canada regions. For availability and cost contact your local distributor, or call CertainTeed Sales Support Group in Valley Forge, PA at 800-233-8990.

WARRANTY

Refer to CertainTeed's Limited One-Year Warranty for Fiber Glass Duct Wraps (30-29-047).

MAINTENANCE

An inspection and preventative maintenance program for the HVAC system is recommended to ensure optimum performance.

TECHNICAL DATA

Applicable Standards

- Model Building Codes:
  – ICC
- Material Standards:
  – ASTM C1290
    Type I, Unfaced
    Type II, PSK – Grey
    Type III, FSK & PSK – White
  – ASTM C553
    Type I, Type 75 Duct Wrap
    Type II, Type 100 & 150 Duct Wrap
    Type III, Type 150 Duct Wrap
  – CAN/CGSB-51.11-92
  – ASTM C1136: FSK & White PSK, Type II, Gray PSK, Type IV
- Fire Safety Standards:
  – NFPA 90A, NFPA 90B

Fire Resistance

- Fire Hazard Classification:
  – UL 723, ASTM E84, CAN/ULC-S102
    Max. Flame Spread Index: 25
    Max. Smoke Developed Index: 50
- Non-Combustible: ASTM E136 / Meets test requirements

Physical/Chemical Properties

- Thermal Performance: See table on other side
- Operating Limits:
  – Temperature: ASTM C411
    Faced: Max. 250°F / 121°C
    Unfaced: Max. 450°F / 232°C
- Water Vapor Sorption: ASTM C1104 / < 5% by weight
- Water Vapor Transmission – Facing:
  – ASTM E96, Desiccant Method
    FSK and white PSK: Max. 0.02 perms (1.15×10^{-9} g/Pa•s•m²)
    Gray PSK: Max. 0.09 perms (5.17×10^{-9} g/Pa•s•m²)
- Corrosiveness: ASTM C665
  – Pass test requirements
- Fungi Resistance: ASTM C1338
  – Pass test requirements
- Odor Emission: ASTM C1304
  – Pass test requirements

Quality Assurance

CertainTeed's commitment to quality and environmental management has ensured the registration of the Athens, Chowchilla and Kansas City plants to ISO 9001:2000 and ISO 14001:2004 standards. The GREENGUARD® Environmental Institute has certified SoftTouch Duct Wrap Insulation for low emissions of total particle, formaldehyde and other Volatile Organic Compounds (VOCs).

TECHNICAL SERVICES

Technical assistance can be obtained either from your local CertainTeed sales representative, or by calling CertainTeed Sales Support Group in Valley Forge, PA at 800-233-8990.

FILING SYSTEMS

- CertainTeed Pub. No. 30-36-081
- Sweet's Catalog Files, 230700
- Additional product information available upon request.

CONDENSATION CONTROL

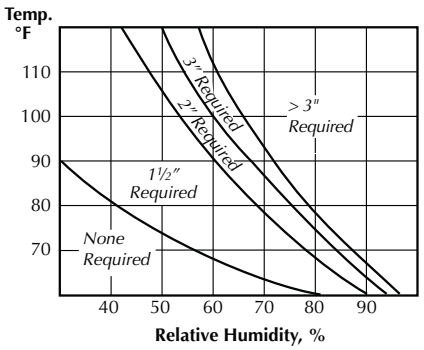

This chart is based on indoor conditions so far as wind and other factors are concerned.

To determine thickness to prevent condensation, based on installed thickness at 75% of nominal (out-of-package) thickness and a duct internal air temperature of 55°F, refer to the condensation control chart.

To use: 1) Select maximum relative humidity (%) on lower axis; 2) Read up vertically until that line intersects the maximum ambient air temperature; 3) Select the thickness indicated at the point of intersection.

THERMAL PERFORMANCE

Product Type	Thickness in.	Thickness mm	R-Value h•ft²•°F/Btu	R-Value m²•°C/W	Installed R-Value h•ft²•°F/Btu	Installed R-Value m²•°C/W	K-Value Btu•in/h•ft²•°F	K-Value W/m²•°C	Installed K-Value Btu•in/h•ft²•°F	Installed K-Value W/m²•°C
75 (0.75 pcf*)	1	25	3.8	0.67	3.0	0.53	0.26	0.038	0.25	0.036
	1½	38	5.2	0.92	4.2	0.74	0.29	0.042	0.27	0.039
	2	51	6.9	1.22	5.7	1.00	0.29	0.042	0.26	0.038
	2⅛	54	7.3	1.29	6.0	1.06	0.29	0.042	0.27	0.038
	2½	64	8.6	1.51	7.1	1.25	0.29	0.042	0.26	0.037
	3	76	10.2	1.80	8.3	1.46	0.29	0.42	0.27	0.039
	4	102	13.5	2.38	11.0	1.94	0.30	0.043	0.27	0.039
100 (1.0 pcf*)	1	25	3.8	0.67	3.0	0.53	0.26	0.038	0.25	0.036
	1½	38	5.7	1.00	4.5	0.79	0.26	0.038	0.25	0.036
	2	51	7.6	1.34	6.1	1.07	0.26	0.038	0.25	0.035
150 (1.5 pcf*)	1	25	4.1	0.72	3.2	0.56	0.24	0.035	0.23	0.034
	1½	38	6.2	1.09	4.8	0.85	0.24	0.035	0.23	0.034
	2	51	8.3	1.46	6.4	1.13	0.24	0.035	0.23	0.034

Tested in accordance with ASTM C518 and/or ASTM C177 at 75°F (24°C) mean temperature. R means resistance to heat flow. The higher the R-value, the greater the insulating power. The installed R-value and K-value based upon 25% compression of the product thickness during installation. To get the installed R-value, it is essential that this insulation be installed properly. If you do it yourself, follow the installation instructions carefully.

*pcf. is pounds per square foot

INSTALLATION STRETCH-OUT DIMENSIONS

Product Label Thickness in.	Product Label Thickness mm	Average Installed Thickness in.	Average Installed Thickness mm	Stretch-Out Dimensions[1] perim.	Round Duct in.	Round Duct mm	Square Duct in.	Square Duct mm	Rectangular Duct in.	Rectangular Duct mm
1	25	0.75	19	P+	7.0	178	6.0	152	5.0	127
1.5	38	1.13	29	P+	9.5	241	8	203	7	178
2	51	1.50	38	P+	12	305	10	254	8	203
2.125	54	1.59	40	P+	12.6	321	10.4	270	8.4	213
2.5	64	1.875	48	P+	14.5	368	12.5	318	9.5	241
3	76	2.25	57	P+	17	432	14.5	368	11.5	292
4	106	3.00	76	P+	22.0	559	18.5	470	14.5	368

[1] The stretch-out dimension is equal to the duct perimeter (P) plus the add-on factor for the type of duct being installed.

AVAILABLE SIZES

Product Type	Facing	Thickness in.	Thickness mm	Length in.	Length m	Width in.	Width mm
75 (0.75 pcf)	UNFACED	1	25	150	45.7	9 - 72	229 - 1829
		1½	38	150	45.7		
		2	51	75	22.9		
		2½	64	75	22.9		
		3	76	50	15.2		
	FSK/PSK	1½	38	100	30.5	48	1219
		2	51	75	22.9		
		2⅛	54	75	22.9		
		2½	64	75	22.9		
		3	76	50	15.2		
		4	102	50	15.2		
100 (1.0 pcf)	Unfaced	1	25	150	45.7	9 - 72	229 - 1829
	FSK/PSK	1	25	100	30.5	48	1219
		1½	38	100	30.5		
		2	38	75	22.9		
150 (1.5 pcf)	FSK/PSK	1½	38	75	22.9	48	1219
		2	51	50	15.2		

NAIMA · GREENGUARD · U.S. Green Building Council Member · ENERGY STAR AWARD 2014 PARTNER OF THE YEAR Sustained Excellence · ISO 9001:2000 Registered

ASK ABOUT ALL OF OUR OTHER CERTAINTEED® PRODUCTS AND SYSTEMS:

ROOFING • SIDING • TRIM • DECKING • RAILING • FENCE
GYPSUM • CEILINGS • INSULATION

CertainTeed Corporation
P.O. Box 860
Valley Forge, PA 19482

Professional: 800-233-8990
Consumer: 800-782-8777

www.certainteed.com http://blog.certainteed.com

© 11/14 CertainTeed Corporation, Printed in the U.S.A.
Code No. 30-35-016

SAINT-GOBAIN

23 07 13 2.4

Venture Tape™ Aluminum Foil Tape 1521CW

Technical Data **April, 2015**

Product Description

3M™ Venture Tape™ Aluminum Foil Tape 1521CW is a high strength dead soft aluminum foil coated with a cold weather solvent acrylic pressure sensitive adhesive.

Product Construction

Backing	Adhesive	Color	Liner	Standard Roll Length
Aluminum Foil	Acrylic	Natural Aluminum	Release Liner	50 yds (45.7 m)

Features

- Excels in demanding temperature and humidity applications
- Conforms well to irregular surfaces
- Specifically designed for cold weather conditions
- Hand tearable

Typical Physical Properties

Note: The following technical information and data should be considered representative or typical only and should not be used for specification purposes.

Test	Typical Value	Typical Value (Metric)	Test Method
Product Thickness	2.7 mils	0.07 mm	PSTC-133
Peel Adhesion	40 oz/in	11.1 N/25 mm	PSTC-101
Shear Adhesion	>24 hrs @ 2.2 psi	>24 hrs @ 15.2 kPa	PSTC-107
Tensile Strength	16 lb/in	72.3 N/25 mm	PSTC-131
Elongation	5%	5%	PSTC-131
Service Temperature	-40° to 250°F	-40° to 121°C	

Application Ideas

- Applies easily to both fibrous and sheet metal ducts

Classifications

- UL723 Classified (5/10 Flame/Smoke Rating) [UL file #R10984]
- U.S. Coast Guard Approved (CGA #164.112/63/0)

3M™ Venture Tape™ Aluminum Foil Tape 1521CW

Storage

Store in a clean, dry place. Temperature of 40-80°F (4-26°C) and 40 to 50% relative humidity are recommended.

Shelf Life

To obtain best performance, use this product within 12 months from date of manufacture

Technical Information

The technical information, recommendations and other statements contained in this document are based upon tests or experience that 3M believes are reliable, but the accuracy or completeness of such information is not guaranteed.

Product Use

Many factors beyond 3M's control and uniquely within user's knowledge and control can affect the use and performance of a 3M product in a particular application. Given the variety of factors that can affect the use and performance of a 3M product, user is solely responsible for evaluating the 3M product and determining whether it is fit for a particular purpose and suitable for user's method of application.

Warranty, Limited Remedy, and Disclaimer

Unless an additional warranty is specifically stated on the applicable 3M product packaging or product literature, 3M warrants that each 3M product meets the applicable 3M product specification at the time 3M ships the product. 3M MAKES NO OTHER WARRANTIES OR CONDITIONS, EXPRESS OR IMPLIED, INCLUDING, BUT NOT LIMITED TO, ANY IMPLIED WARRANTY OR CONDITION OF MERCHANTABILITY OR FITNESS FOR A PARTICULAR PURPOSE OR ANY IMPLIED WARRANTY OR CONDITION ARISING OUT OF A COURSE OF DEALING, CUSTOM OR USAGE OF TRADE. If the 3M product does not conform to this warranty, then the sole and exclusive remedy is, at 3M's option, replacement of the 3M product or refund of the purchase price.

Limitation of Liability

Except where prohibited by law, 3M will not be liable for any loss or damage arising from the 3M product, whether direct, indirect, special, incidental or consequential, regardless of the legal theory asserted, including warranty, contract, negligence or strict liability.

ISO 9001

This Industrial Adhesives and Tapes Division product was manufactured under a 3M quality system registered to ISO 9001 standards.

Section 20 07-13 23-07-16
23-07-19

3M

Industrial Adhesives and Tapes Division

3M Center, Building 225-3S-06
St. Paul, MN 55144-1000
800-362-3550 • 877-369-2923 (Fax)
www.3M.com/construction

Recycled Paper
40% pre-consumer
10% post-consumer

3M and Venture Tape are trademarks of 3M Company.
Printed in U.S.A.
©3M 2015 All rights reserved.
E 70-0709-4183-9

Mécanique Nordique
Plumbing
Heating
Ventillation
mecanique.nordique@hotmail.com
1255 Rue J.A.Bombardier Lévis QC G7A 2P4
Tél : (418) 496-1109 Fax : (418) 496-3803

REVIEWED BY CONTRACTOR
Kudlik Construction Ltd.
NAME: Sandra Rousseau P.Eng
DATE: Jul 12, 2018

IQUALUIT WWTP UPGRADES

DRAWING FOR APPROVAL

ENGINEER: **NUNAMI STANTEC LIMITED**

DRAWING #: AD-028

Section	:	ACESSORIES FOR HEATING PUMPS
Article	:	P-1.3 & P-1.4
Plans	:	M602 & M702
Application	:	SUCTION GUIDE DIFFUSER 4"
Brand	:	COMBINATION VALVES 4"
Model	:	GRUNDFOS ANSI 125 & ANGLE TYPE
Revised #	:	
Supplyer	:	WOLSELEY
Date	:	**12/07/2018**
By	:	Martin Boucher

Pump inlet/outlet size are 2.5" (see AD-007). Confirm suction guide suitable with pump prior to ordering.

STANTEC PROJECT #: 110126045
SUBMITTAL # AD-028

This review by Stantec is for general conformance with the design concept of Stantec's design of the:
- ☐ Architectural
- ☐ Structural
- ☑ Mechanical
- ☐ Electrical
- ☐ Other

Stantec

component(s) only and does not mean that Stantec has verified or approves the shop drawing(s). The Contractor remains solely responsible for the shop drawing(s) and this review by Stantec does not relieve the Contractor of the Contractor's responsibility for errors or omissions in the shop drawing(s) or for meeting all requirements of the contract documents. This review does not mean that Stantec approves the detailed design inherent in the shop drawing, responsibility for which shall remain with the Contractor submitting same, nor does this review mean that Stantec accepts any deviation of the shop drawing(s) from the contract documents. The Contractor is responsible for confirming all dimensions and correlating them at the job site, for all construction means, methods and techniques, and for coordination of construction work of all trades, including coordination of all shop drawings.

- ☐ REVIEWED
- ☑ REVIEWED, AS NOTED
- ☐ REVISE AND RESUBMIT
- ☐ NOT REVIEWED

DATE 2018-07-20
BY Brendan Zrum, P.Eng

Accessories

February 2011

Combination valve



TM 04 7386 2010

Fig. 1 Combination valve

General information

A combination valve fitted between the discharge pipe and the discharge flange of a Grundfos pump gives the following advantages:

- The combination valve combines three valves in one: shut-off valve, balancing valve and check valve.
- The combination valve provides the feature of changing the flange orientation to allow 90 ° pipe connection.
- The combination valve makes it possible to reduce the overall system pressure drop since fewer individual components are needed when installing a pump.
- The combination valve is easy to dismantle and service. Internal parts, such as the disc can be easily removed and/or replaced.
- The combination valve has a built-in bypass valve allowing for drainage of water upstream of the check valve. (See Fig 3. and Fig 4.)
  The bypass valve MUST be CLOSED at all times in normal operation.
  The bypass valve should ONLY be used by authorized personel to drain water from the piping above.

Combination valve range

Combination valves are available with ANSI 125 flanges and ANSI 250 flanges, see technical data below, and a variety of sizes ranging from 2 inches to 14 inches suction and discharge ports, see dimensional table.

Technical data

	ANSI 125	ANSI 250
Pumped liquid	Water	Water
Max. pressure	175 psi	250 psi
Max. liquid temperature	150 °F	248 °F
Test pressure	265 psi	426 psi
Materials:		
Upper body	ASTM A395 (ductile iron) / ASTM A126 Class B (cast iron)	ASTM A395 (ductile iron)
Lower body	ASTM A395 (ductile iron) / ASTM A126 Class B (cast iron)	ASTM A395 (ductile iron)
Stem	ASTM B124 C37700 (bronze)	ASTM A240-304 (stainless steel)
Hand wheel	ASTM A395 (ductile iron)	
Disc	ASTM A395 (ductile iron) / ASTM B124 C37700 (bronze) / ASTM A240- 304 (stainless steel)	
Soft seat	EPDM / ASTM B124 C37900 (bronze)	
Sleeve	ASTM B124 C37700 (bronze)	
Bush	ASTM B124 C37700 (bronze)	
Gland	ASTM B124 C37700 (bronze)	
Spring	ASTM A240-304 (stainless steel)	
Gasket	PTFE	
O-Ring	EPDM	
Disc ring	ASTM B584 C85400 (bronze)	
Disc bush	ASTM B124 C37700 (bronze)	
Bonnet	ASTM B124 C37700 (bronze)	
Disc packing	PTFE	

Installation

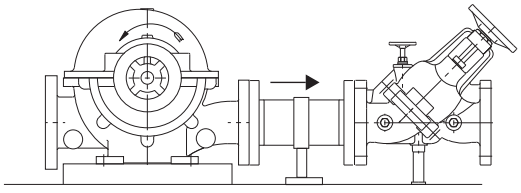

TM04 7387 2410

Fig. 2 Pump installation with combination valve

Accessories

Sectional drawing and components

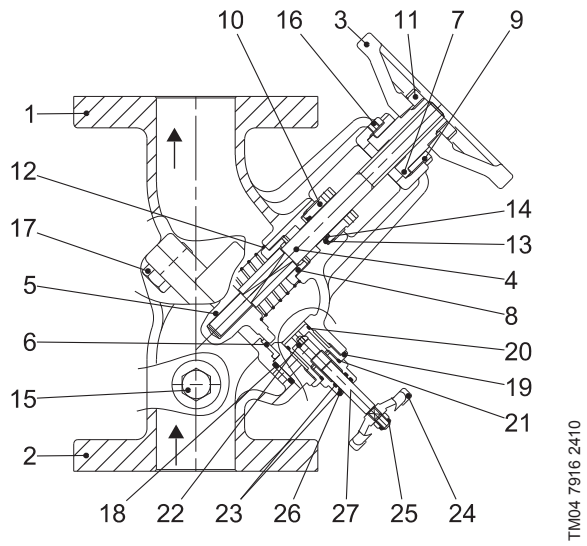

Fig. 3 Sectional drawing of a combination valve 2" to 8"

Typical component list

Po no.	Description	Po no.	Description
1	Upper body	16	Socket set screw
2	Lower body	17	Bolt
3	Hand wheel	18	O-ring
4	Stem	19	Soft seat (bypass)
5	Disc	20	O-ring
6	Soft seat	21	O-ring
7	Sleeve (on shaft)	22	Disc packing
8	Bush	23	O-ring
9	Yoke nut (on shaft)	24	Hand wheel
10	Gland	25	Locknut
11	Hand wheel nut	26	Bonnet
12	Spring	27	Stem B
13	Gasket		
14	O-ring		
15	Plug		

Positions 20-27 cover the bypass valve only.
2" to 8" valves.

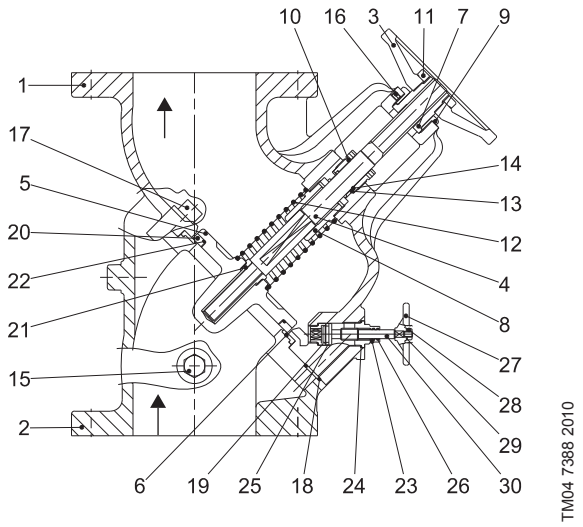

Fig. 4 Sectional drawing of a combination valve 10" to 14"

Typical component list

Po no.	Description	Po no.	Description
1	Upper body	16	Socket set screw
2	Lower body	17	Wrench bolt
3	Hand wheel	18	O-ring
4	Stem	19	Soft seat (bypass)
5	Disc	20	Disc ring
6	Soft seat	21	Disc bush
7	Sleeve (on shaft)	22	O-ring
8	Bush	23	Bonnet
9	Yoke nut (on shaft)	24	O-ring
10	Gland	25	Disc packing
11	Hand wheel nut	26	O-ring
12	Spring	27	Hand wheel
13	Gasket	28	Nut
14	O-ring	29	Spring washer
15	Plug	30	Stem B

Positions 23-30 cover the bypass valve only.
10" to 14" valves.

Accessories

Dimensions and weights- Straight Type

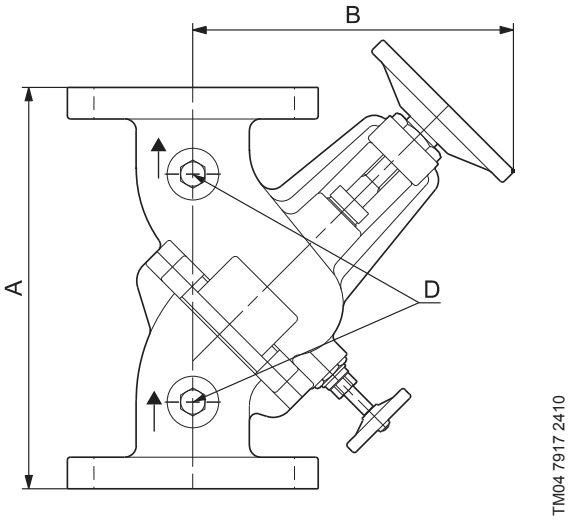

Fig. 5 Dimensional drawing of a combination valve 2" to 8"

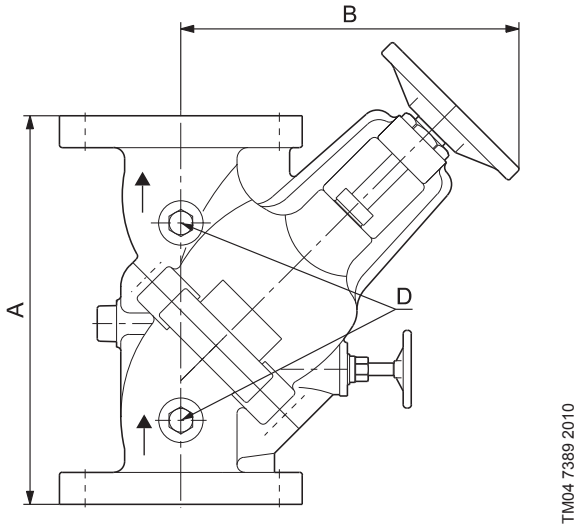

Fig. 6 Dimensional drawing of a combination valve 10" to 14"

ANSI 125

Inlet/outlet [inches]	Dimensions [inches]			Weight [lbs]
	A	B	D-NPT	
2 x 2	9.37	7.91	3/8	25
2.5 x 2.5	11.02	8.82	1/2	34
3 x 3	11.65	9.61	1/2	40
4 x 4	13.27	10.83	1/2	56
5 x 5	14.53	11.89.	1/2	75
6 x 6	17.28	14.45	1/2	120
8 x 8	20.24	16.69	1/2	194
10 x 10	25.04	21.54	1/2	422
12 x 12	27.44	23.35	1/2	635
14 x 14	29.80	27.68	1/2	696

Dimensions shown are valve with open/close position.
All dimension tolerances +/– .25".

ANSI 250

Inlet/outlet [inches]	Dimensions [inches]			Weight [lbs]
	A	B	D-NPT	
2 x 2	9.37	7.91	3/8	25
2.5 x 2.5	11.02	8.82	1/2	34
3 x 3	11.65	9.61	1/2	40
4 x 4	13.27	10.83	1/2	56
5 x 5	14.53	11.89.	1/2	75
6 x 6	17.28	14.45	1/2	120
8 x 8	20.24	16.69	1/2	194
10 x 10	26.42	21.54	1/2	422
12 x 12	28.94	23.35	1/2	635
14 x 14	31.30	27.68	1/2	696

Dimensions shown are valve with open/close position.
All dimension tolerances +/– .25".

Accessories

Dimensions and weights- Angle Type

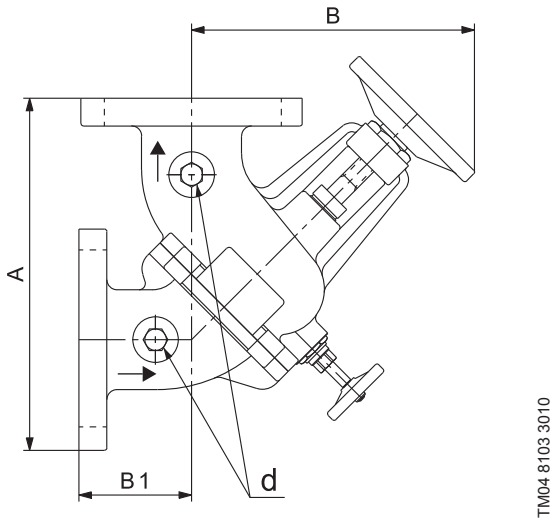

Fig. 7 Dimensional drawing of a combination valve 2" to 8"

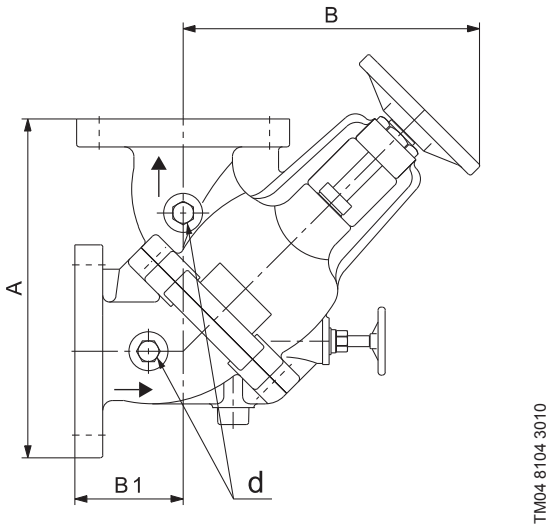

Fig. 8 Dimensional drawing of a combination valve 10" to 14"

ANSI 125

Inlet/outlet [inches]	Dimensions [inches]				Weight [lbs]
	A	B	B1	D-NPT	
2 x 2	7.91	9.33	3.03	3/8	25
2.5 x 2.5	8.82	11.02	3.50	1/2	34
3 x 3	9.61	11.85	3.58	1/2	40
4 x 4	10.83	13.66	4.13	1/2	56
5 x 5	11.89.	15.31	4.17	1/2	75
6 x 6	14.45	17.89	4.88	1/2	120
8 x 8	16.69	20.87	6.12	1/2	194
10 x 10	21.54	25.20	7.76	1/2	422
12 x 12	23.35	28.41	8.50	1/2	635
14 x 14	27.68	31.87	8.54	1/2	696

Dimensions shown are valve with open/close position.
All dimension tolerances +/– .25".

ANSI 250

Inlet/outlet [inches]	Dimensions [inches]				Weight [lbs]
	A	B	B1	D-NPT	
2 x 2	7.91	9.33	3.03	3/8	25
2.5 x 2.5	8.82	11.02	3.50	1/2	34
3 x 3	9.61	11.85	3.58	1/2	40
4 x 4	10.83	13.66	4.13	1/2	56
5 x 5	11.89.	15.31	4.17	1/2	75
6 x 6	14.45	17.89	4.88	1/2	120
8 x 8	16.69	20.87	6.12	1/2	194
10 x 10	21.54	25.20	7.76	1/2	422
12 x 12	23.35	28.41	8.50	1/2	635
14 x 14	27.68	31.87	8.54	1/2	696

Dimensions shown are valve with open/close position.
All dimension tolerances +/– .25".

Accessories

Part numbers

Combination valves can be ordered using these part numbers.
Straight type valve shipped from factory only.See IOM for conversion to angle type valve.

Inlet/outlet [inches]	ANSI 125		ANSI 250	
	Reference No.	Part No.	Reference No.	Part No.
2 x 2	CV20-125	97523122	CV20-250	97523104
2.5 x 2.5	CV25-125	97523123	CV25-250	97523105
3 x 3	CV30-125	96877844	CV30-250	97523106
4 x 4	CV40-125	96877845	CV40-250	97523107
5 x 5	CV50-125	97523124	CV50-250	97523108
6 x 6	CV60-125	96877846	CV60-250	97523109
8 x 8	CV80-125	96877847	CV80-250	97523141
10 x 10	CV10-125	97523125	CV10-250	97523142
12 x 12	CV12-125	97523126	CV12-250	97523143
14 x 14	CV14-125	97523127	CV14-250	97523144

NOTE: Use part no. to order the combination valve.
250# flanges are available upon request with 14 weeks delivery.

Pressure drop

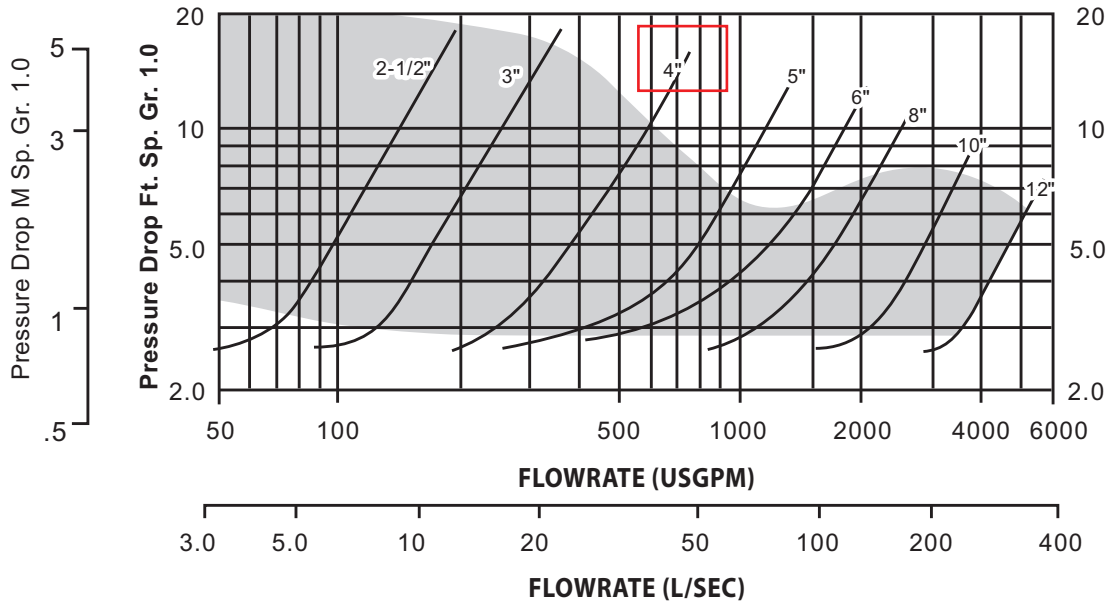

TM04 7390 2010

Fig. 9 Pressure drop graph for combination valves.
Valve in full open position. Size valves in shaded area only.

Accessories

February 2011

Suction diffuser



TM04 7049 1510

Fig. 1 Suction diffuser

General information

A suction diffuser fitted between the suction pipe and the suction flange of a Grundfos pump gives the following advantages:

- The suction diffuser provides and ensures a uniform flow pattern to the suction side of the pump. This ensures a stable NPSH.
- The suction diffuser makes it possible to install the pump in a very narrow spacing as no long bends are necessary.
  The suction diffuser may even save floor space - and thus money.
- The suction diffuser incorporates a cylindrical strainer preventing impurities from entering the pump.
- The suction diffuser comes with a disposable, fine mesh, stainless steel start-up screen for capture and removal of foreign particulates in system piping.
- The suction diffuser has an adjustable support for mounting.
- The suction diffuser is easy to dismantle and service. Internal parts such as strainer can be easily removed, cleaned and/or replaced.

Suction diffuser range

Suction diffusers are available in ANSI 125 flanges and ANSI 250 flanges, see technical data below, and a variety of sizes ranging from 1.5 x 2 inches to 12 x 12 inches suction and discharge ports, see dimensional table.

Technical data

	ANSI 125	ANSI 250
Pumped liquid	Water	Water
Max. pressure	175 psi	250 psi
Max. liquid temperature	150 °F	248 °F
Test pressure	265 psi	426 psi
Materials:		
Body	ASTM 126 Class B (cast iron)	ASTM A395 (ductile iron)
Cover	ASTM 126 Class B (cast iron)	ASTM A395 (ductile iron)
O-ring	EPDM	
Screen	ASTM A240-304 (stainless steel)	

Installation

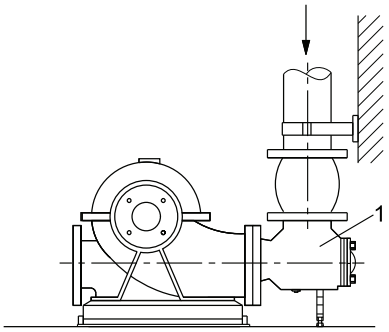

TM04 0096 4907

Fig. 2 Pump installation with suction diffuser

Sectional drawing and components

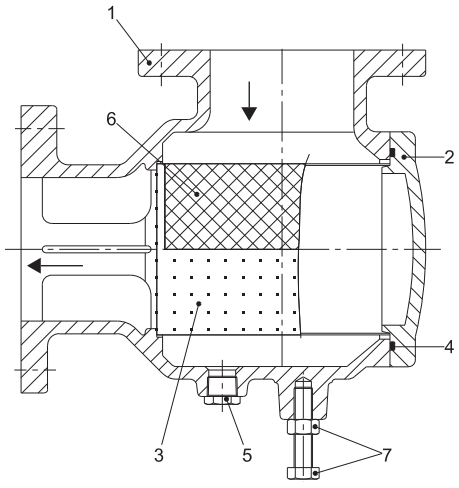

TM04 7050 1510

Fig. 3 Sectional drawing of a suction diffuser

Po no.	Description
1	Body
2	Cover
3	Screen (permanent)
4	O-ring

Po no.	Description
5	Drain plug
6	Screen (temporary)
7	Bolt, nut

Accessories

Dimensions and weights

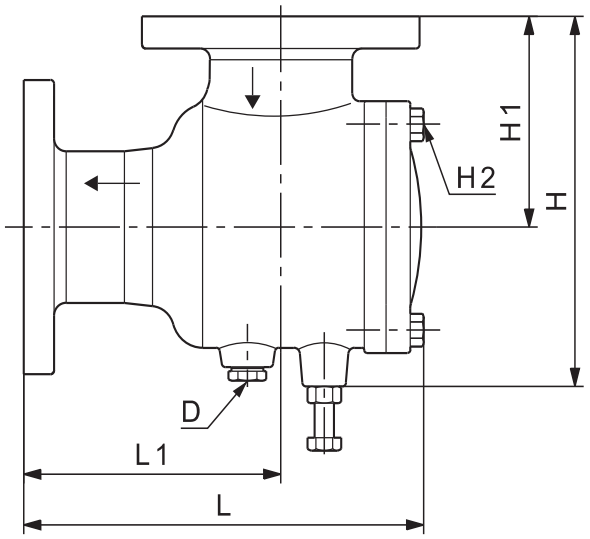

TM04 7051 1510

Fig. 4 Dimensional drawing of a suction diffuser

ANSI 125

Inlet/outlet [inches]	Dimensions [inches]					H2 [no. of bolts]	Weight [lbs]
	L*	L1	H	H1	D-NPT		
2 x 1.5	8.2	5.0	7.2	4.0	1/2	4	21
2 x 2	8.3	5.1	7.2	4.0	1/2	4	22
2.5 x 2	9.7	6.0	8.6	5.0	1/2	4	29
2.5 x 2.5	9.7	6.0	8.6	5.0	1/2	4	34
3 x 2	11.1	7.1	9.6	5.6	1/2	4	39
3 x 2.5	11.1	7.1	9.6	5.6	1/2	4	39
3 x 3	11.1	7.1	9.6	5.6	1/2	4	40
4 x 3	12.9	8.3	11.4	6.5	3/4	6	60
4 x 4	12.9	8.3	11.4	6.5	3/4	6	64
5 x 4	14.3	9.4	12.7	6.9	3/4	6	91
5 x 5	13.9	9.0	12.7	6.9	3/4	6	93
6 x 4	15.7	10.1	14.4	8.0	3/4	6	120
6 x 5	15.9	10.3	14.4	8.0	3/4	6	122
6 x 6	15.6	10.1	14.4	8.0	3/4	6	137
8 x 6	18.9	11.9	17.5	10.0	3/4	6	188
8 x 8	18.9	11.9	17.5	10.0	3/4	6	201
10 x 8	23.5	14.3	20.6	11.5	1	6	305
10 x 10	23.5	14.3	20.6	11.5	1	6	314
12 x 8	28.0	17.9	23.5	12.9	1	8	441
12 x 10	28.0	17.9	23.5	12.9	1	8	448
12 x 12	28.0	17.9	23.5	12.9	1	8	455

* Includes bolt head only, not washer.
All dimension tolerances +/-.125".
Screen Size: Mesh- 20#, Perforated Hole- 0.138".

ANSI 250

Inlet/outlet [inches]	Dimensions [inches]					H2 [no. of bolts]	Weight [lbs]
	L*	L1	H	H1	D-NPT		
2 x 1.5	8.4	5.2	7.4	4.2	1/2	4	21
2 x 2	8.5	5.3	7.4	4.2	1/2	4	22
2.5 x 2	9.7	6.0	8.6	5.0	1/2	4	29
2.5 x 2.5	9.7	6.0	8.6	5.0	1/2	4	34
3 x 2	11.1	7.1	9.6	4.0	1/2	4	39
3 x 2.5	11.1	7.1	9.6	5.6	1/2	4	39
3 x 3	11.1	7.1	9.6	5.6	1/2	4	40
4 x 3	12.9	8.3	11.4	6.5	3/4	6	60
4 x 4	12.9	8.3	11.4	6.5	3/4	6	64
5 x 4	14.3	9.4	12.7	6.9	3/4	6	91
5 x 5	13.9	9.0	12.7	6.9	3/4	6	93
6 x 4	15.7	10.1	14.4	8.0	3/4	6	120
6 x 5	15.9	10.3	14.4	8.0	3/4	6	122
6 x 6	15.6	10.1	14.4	8.0	3/4	6	137
8 x 6	19.4	12.3	18.1	10.5	3/4	6	188
8 x 8	19.4	12.4	18.1	10.5	3/4	6	201
10 x 8	23.5	14.3	20.6	11.5	1	6	305
10 x 10	23.5	14.3	20.6	11.5	1	6	314
12 x 8	28.0	17.9	23.5	12.9	1	8	441
12 x 10	28.0	17.9	23.5	12.9	1	8	448
12 x 12	28.0	17.9	23.5	12.9	1	8	455

* Includes bolt head only, not washer.
All dimension tolerances +/-.125".
Screen Size: Mesh- 20#, Perforated Hole- 0.138".

Accessories

Part numbers

Suction diffusers can be ordered using these part numbers:

Inlet/outlet [inches]	ANSI 125		ANSI 250	
	Reference No.	Part No.	Reference No.	Part No.
2 x 1.5	SD2025-125	97523145	SD2025-250	97523428
2 x 2	SD2020-125	97523146	SD2020-250	97523429
2.5 x 2	SD2520-125	97523147	SD2520-250	97523430
2.5 x 2.5	SD2525-125	97523148	SD2525-250	97523441
3 x 2	SD3020-125	97523149	SD3020-250	97523443
3 x 2.5	SD3025-125	97523150	SD3025-250	97523444
3 x 3	SD3030-125	96877828	SD3030-250	97523445
4 x 3	SD4030-125	97523151	SD4030-250	97523446
4 x 4	SD4040-125	96877830	SD4040-250	97523463
5 x 4	SD5040-125	96877831	SD5040-250	97523464
5 x 5	SD5050-125	97523152	SD5050-250	97523465
6 x 4	SD6040-125	97523153	SD6040-250	97523466
6 x 5	SD6050-125	97523154	SD6050-250	97523467
6 x 6	SD6060-125	96877842	SD6060-250	97523468
8 x 6	SD8060-125	97523155	SD8060-250	97523469
8 x 8	SD8080-125	97666296	SD8080-250	97523470
10 x 8	SD1080-125	97523156	SD1080-250	97523481
10 x 10	SD1010-125	97523157	SD1010-250	97523482
12 x 8	SD1280-125	97523158	SD1280-250	97523483
12 x 10	SD1210-125	97523159	SD1210-250	97523484
12 x 12	SD1212-125	97523160	SD1212-250	97534549

NOTE: Use part no. to order the suction diffuser.
250# flanges are available upon request with 14 weeks delivery.

Pressure drop

In operation the suction diffuser causes a minor pressure drop.

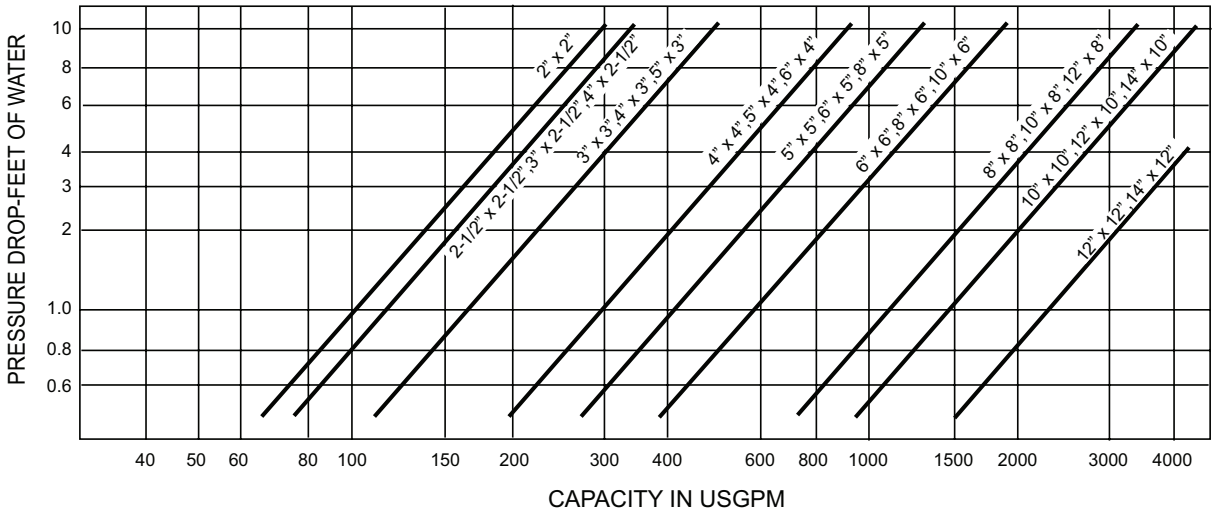

Fig. 5 Pressure drop graph for suction diffusers.

Figure XPTT
GAUGES & THERMOMETERS

FNW™

LOW LEAD COMPLIANT PRESSURE/TEMPERATURE TEST PLUG

The figure XPTT lead free brass pressure/temperature test plugs facilitate quick pressure and temperature readings at recommended test points without disturbing the process. They are widely used in the HVAC industry.



Features:

- 1,000 PSI Maximum Operating Pressure
- 1/4" or 1/2" MNPT End Process Connection
- Lead Free Brass Body
- Complies with Federal Lead-Free Law (Sec. 1417)
- EPDM Diaphragm/Core
- Plastic Cap Retainer
- 320°F (160°C) Process Temperature Limit

Low Lead Compliant: Referring to laws defining "Lead Free" as wetted surface of pipe, fittings and fixtures in potable water systems that have a weighted average lead content ≤ 0.25% per the Safe Drinking Water Act (Sec. 1417) amended 1-4-2011 as well as other state regulations.

LOW LEAD COMPLIANT

Part Numbers

Size	Part Number
1/4"	FNWXPTTB
1/2"	FNWXPTTD

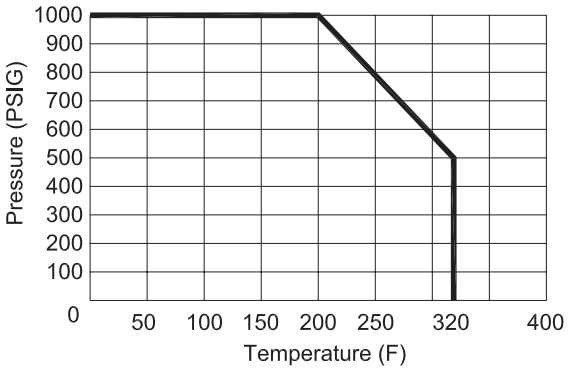

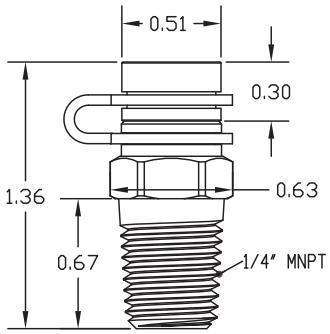

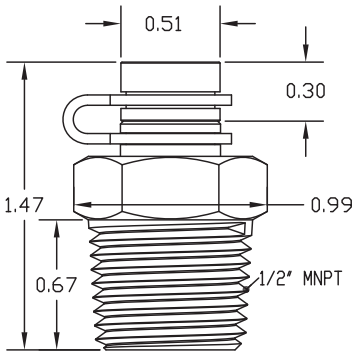

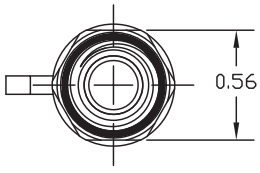

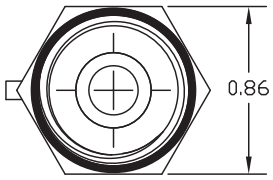

DOC: FNWXPTT13 Ver. 10/2013

© 2013 - FNW. All rights reserved.
The FNW logo is a trademark of Ferguson Enterprises, Inc., PL Sourcing, PO Box 2778, Newport News, VA 23609 www.fnw.com

The contents of this publication are presented for information purposes only, and while effort has been made to ensure their accuracy, they are not to be construed as warranties or guarantees, expressed or implied, regarding the products or services described herein or their use or applicability. All sales are governed by our terms and conditions, which are available on request. We reserve the right to modify or improve the designs or specifications of our products at any time without notice. Always verify that you have the most recent product specifications or other documentation prior to the installation of these products.

REVIEWED BY CONTRACTOR

Kudlik Construction Ltd.

NAME: Sandra Rousseau P.Eng

DATE: Jul 18, 2018

Mécanique Nordique
Plumbing
Heating
Ventillation
mecanique.nordique@hotmail.com

1255 Rue J.A.Bombardier
Lévis, Québec
G7A 2P4
Téléphone: 418-496-1109
Télécopieur: 418-496-3803

IQALUIT WWTP UPGRADE

DRAWING FOR APPROVAL

Ingineer : NUNAMI STANTEC

DRAWING #: AD-030

Section 23 21 16
Article 2.2.2.2 2.3.5
Plans M-302 M-500 M-602
Application : ROLL GROOVED COUPLINGS & FITTINGS
Brand : GRUVLOK
Model : 7401,7012, 7045 ,7046 & GROOVED FITTINGS
Revised # :
Supplyer : Deschenes

Acceptable for use of Div 23 piping. If intended for Div 22 piping use gaskets to be NSF 61 approved.

Pages incl. 22
Date : **2018-07-18**
By : **Mécanique Nordique Inc.**

STANTEC PROJECT #: 110126045

SUBMITTAL # AD-030

This review by Stantec is for general conformance with the design concept of Stantec's design of the:

- ☐ Architectural
- ☐ Structural
- ☑ Mechanical
- ☐ Electrical
- ☐ Other

Stantec

component(s) only and does not mean that Stantec has verified or approves the shop drawing(s). The Contractor remains solely responsible for the shop drawing(s) and this review by Stantec does not relieve the Contractor of the Contractor's responsibility for errors or omissions in the shop drawing(s) or for meeting all requirements of the contract documents. This review does not mean that Stantec approves the detailed design inherent in the shop drawing, responsibility for which shall remain with the Contractor submitting same, nor does this review mean that Stantec accepts any deviation of the shop drawing(s) from the contract documents. The Contractor is responsible for confirming all dimensions and correlating them at the job site, for all construction means, methods and techniques, and for coordination of construction work of all trades, including coordination of all shop drawings.

- ☐ REVIEWED
- ☑ REVIEWED, AS NOTED
- ☐ REVISE AND RESUBMIT
- ☐ NOT REVIEWED

DATE 2018-07-27

BY Brendan Zrum, P.Eng

PRODUCTS FOR GROOVED PIPING SYSTEM

The Gruvlok® System has been manufactured since the late 1960's. The Gruvlok product line has grown from standard couplings and fittings to today's extensive range of grooved product, plain-end product, butterfly valves, check valves, pump protection components, pipe preparation tools and various accessories.

Gruvlok is part of our overall commitment to provide today's piping industry with tomorrow's products.

c UL us LISTED
FM APPROVED
LPCB
VdS
UPC FOUNDED 1926 IAPMO®
DNV
U.S. GREEN BUILDING COUNCIL MEMBER
Certified to ANSI/NSF 61

For Listings/Approval Details and Limitations, visit our website at www.anvilintl.com or contact an Anvil® Sales Representative.

ISO 9001:2008

INDUSTRY & GOVERNMENT STANDARDS & APPROVALS

ANSI	American National Standards Institute
API	American Petroleum Institute: API Std. 5L, Sect. 7.5
ASHRAE	American Society of Heating, Refrigerating and Air Conditioning Engineers
ASME	American Society of Mechanical Engineers: Power Piping, B 31.1; Chemical Plant and Petroleum Refinery Piping, B 31.3; Refrigeration Piping, B 31.5; Building Services Piping, B 31.9; Slurry Pipelines, B 31.11
ASTM	American Society of Testing and Materials: F 1476, F 1387
AWWA	American Water Works Association: C 606
BV	Bureau Veritas
CDF	California State Fire Marshal
COE	Corps of Engineers: CEGS 15000
CSA	Canadian Standards Association: B 242
DNV	Det Norske Veritas
	Hong Kong Fire Services Board
	New Zealand Insurance Council
	New Zealand Building Act. (1991)
FAA	Federal Aviation Administration: HVAC, Plumbing, Fire Protection
FHA	Federal Housing Administration
FM	Factory Mutual Engineering Corp.
GSA	General Services Administration: 15000 Series
IAPMO	International Association of Plumbing & Mechanical Officials
LPC	Loss Prevention Council
MEA	Materials & Equipment Acceptance
MIL	Military Specifications: MILP-10388 Fittings; MIL-C-10387 Couplings; MIL-P-11087A(CE) Steel Pipe, Grooved MIL-I-45208 Inspection Procedure
NASA	National Aeronautics and Space Administration: 15000 Series
NAVFAC	Naval Facilities Engineering Command: NFGS 15000 Series
NFPA	National Fire Protection Association
NIH	National Institute of Health (Dept. of Health): 15000 Series
NSF	NSF International
NY-BSA	New York Board of Standards and Appeals
NYC	New York City
TVA	Tennessee Valley Authority: Fire protection, storm drains
UL	Underwriter's Laboratories, Inc.
ULC	Underwriter's Laboratories of Canada
	Bureau of Marine Inspection: Salt and fresh water, oil transfer
	Bureau of Public Roads; Div. of Bridges: Drain lines and bridge crossings
	Canadian Coast Guard
	U.S. Coast Guard –Approves each vessel individually
USGBC	United States Green Building Council
VA	Veterans Affairs : 15000 Series
VdS	Verband der Sachversicherer e.V.

Note: Please refer to product specific pages for exact listings and approvals related to a specific size for a specific product.

GRUVLOK® – THE ENGINEERED COUPLING

HOUSING (A) FLEXIBLE OR RIGID

The Gruvlok Coupling housing is designed to self-center around the pipe. The housing encircles and retains the gasket against the application of internal system pressure or vacuum.

The housing key sections fit into and engage the pipe-end grooves around the entire pipe circumference, thus restraining the pipe ends from separation due to the application of internal pressure.

Flexible Couplings provide designed-in clearances between the housing key sections and the pipe grooves to permit both angular and longitudinal movement of the pipe. Rigid couplings grip the pipe and lock the joint into position.

All housings are coated with paint for general service applications. The paint serves to provide protection against normal atmospheric corrosion. However, for couplings used in corrosive environments, hot-dip galvanizing, and stainless steel are available.

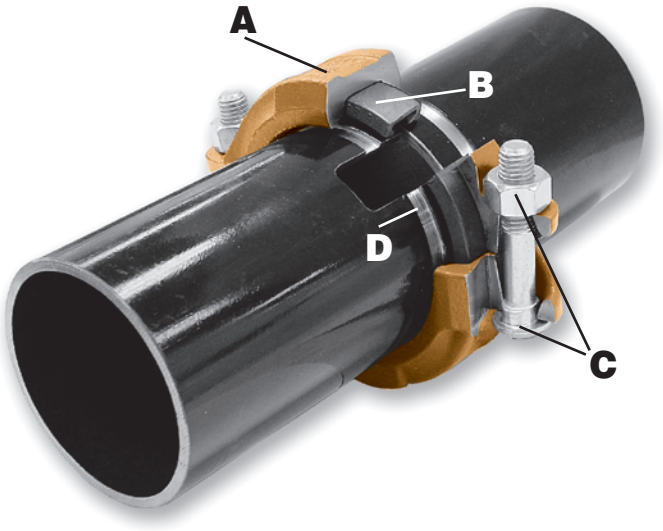

GASKET (B)

The unique single piece "C" style design of the gasket has been engineered to provide a pressure responsive, leak-tight seal in both pressure and vacuum applications without the aid of external forces. The "lips" of the gasket are molded so that upon installation onto the pipe ends they provide compression against the pipe surface to establish the leak-tight seal.

The gasket cavity functions as a "pressure reservoir". Pressure within the pipe system is applied to the internal surfaces of the gasket which increases the sealing force and enhances the leak-tight seal. In vacuum systems, non-pressure-responsive seals tend to "lift off" the pipe, producing leak paths. However, the Gruvlok gasket reacts to the negative pressure (higher outside atmospheric pressure) as to improve the sealing capability of the gasket.

Gasket Reaction to Pressure

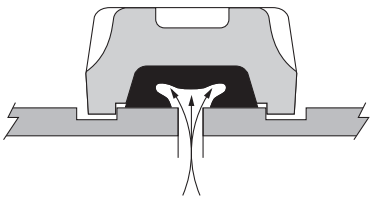

Gasket Reaction to Vacuum

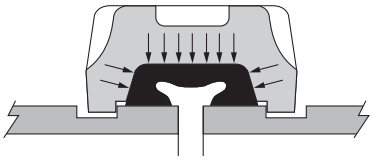

BOLTS AND NUTS (C)

Heat treated oval neck track head bolts serve to connect and secure the housing segments together. The oval neck design prevents turning of the bolt while tightening the hex nut with a single wrench. The bolt size and corresponding wrench (or socket) size for the hex nuts are shown in the chart below.

ANSI

Bolt Size	3/8	1/2	5/8	3/4	7/8	1	1 1/4
Wrench Size	11/16	7/8	1 1/16	1 1/4	1 7/16	1 5/8	2

METRIC

Bolt Size	M10	M12	M16	M20	M22
Wrench Size	16	22	24	30	34

GROOVED PIPE ENDS (D)

The ends of the pipe must have a groove in them which may be either cut grooved or roll grooved. The grooved pipe ends engage the coupling keys, thus, providing a self-restraining, mechanical joint capable of resisting the separation of the pipe ends due to the application of system pressure. The groove diameters must be dimensionally accurate to obtain the maximum benefit of the Gruvlok Coupling.

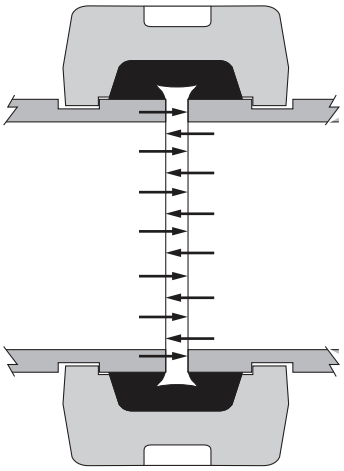

THE GRUVLOK® PIPING METHOD

Gruvlok couplings and grooved-end fittings are widely used for joining pipe in a wide variety of piping systems. Gruvlok couplings for grooved-end pipe are designed to provide a self-centering joint which accommodates the application of pressure, vacuum and other external forces, while limiting the burdensome need for special supports, expansion joints, etc.

The Gruvlok piping method offers many mechanical design features which benefit the design engineer, the contractor, and the end user. Utilization of the functional characteristics of the Gruvlok coupling will aid in pipe system design and must be considered for proper installation, assembly and performance.

The design factors presented in the Gruvlok technical data section should always be referenced to when designing any grooved piping system to obtain the maximum benefit of the Gruvlok piping method.



GRUVLOK FEATURES

RIGIDITY OR FLEXIBILITY

Couplings are available where rigid connections are required. Rigid couplings are clearly marked with an "X" for identification.

Couplings with flexible design allow for pipe expansion and contractions with temperature changes. The need for an expansion joint is minimized or eliminated.

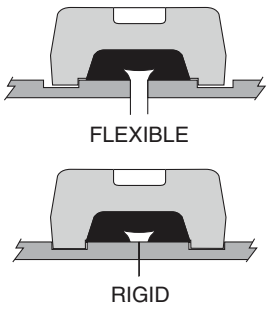

SELF RESTRAINED JOINT

The couplings engage the pipe around the entire circumference and restrain the pipe ends from separation due to pressure and other forces, up to the maximum coupling rated working pressure.

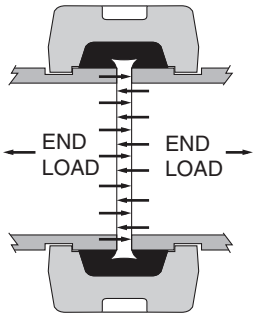

UNION AT EVERY JOINT

Gruvlok couplings can be disassembled easily permitting maintenance and servicing of the piping system. It will facilitate periodic rotation of pipe to distribute internal wear from slurries or other abrasive media.

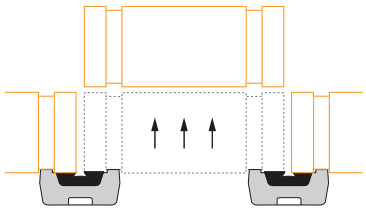

STRESS-FREE SYSTEM

Flexibility designed in the Gruvlok coupling absorbs and eliminates stress from settlement of buried pipe or those induced by seismic tremors.

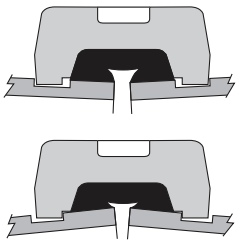

MINIMIZES NOISE & VIBRATION

The resilient elastomeric gasket and pre-designed gap of the Gruvlok coupling help isolate and absorb noise and vibration, this minimizes vibration transmission.

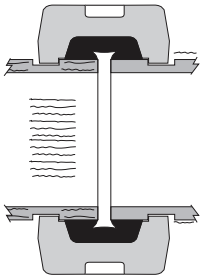

ACCOMMODATES MISALIGNMENT AND JOINT DEFLECTION

The flexibility designed into the Gruvlok coupling will accommodate misalignments caused by imprecise location of pipe opening through walls and floors, will provide pitch for drainage piping systems and facilitate laying pipe on uneven terrain, thus permitting deflection in any direction.

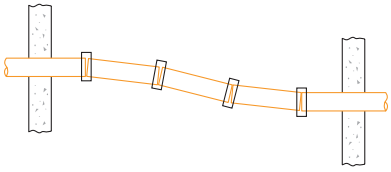

GRUVLOK® COUPLINGS FOR GROOVED-END PIPE

Gruvlok couplings for grooved-end pipe are available in nominal pipe sizes 1" thru 60" and metric sizes. The variety of coupling designs provide a universal means for the connection of pipe, fittings and pipe system components. The wide assortment of Gruvlok couplings and gaskets permit selection of the most suitable combination for a specific application, thus providing the most versatile and economical pipe system installation.

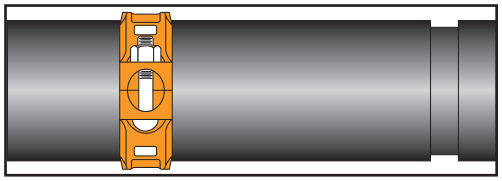

MATERIAL SPECIFICATIONS

BOLTS:
SAE J429, Grade 5, Zinc Electroplated
ISO 898-1, Class 8.8, Zinc Electroplated followed by a Yellow Chromate Dip

HEAVY HEX NUTS:
ASTM A563, Grade A, Zinc Electroplated
ISO 898-2, Class 8.8, Zinc Electroplated followed by a Yellow Chromate Dip

STAINLESS STEEL BOLTS & NUTS:
Stainless steel bolts and nuts are available for the Fig. 7001, 7401, 7401-2, 7001-2, 7004, 7000 and 7400 couplings in standard 304SS, (316SS available as special order)

HOUSING:
Ductile Iron conforming to ASTM A 536, Grade 65-45-12

COATINGS:
Rust inhibiting paint Color: ORANGE (standard)
Hot Dipped Zinc Galvanized (optional)
Other Colors Available (IE: RAL3000 and RAL9000)
For other Coating requirements contact an Anvil Representative.

GASKETS: Materials
Properties as designated in accordance with ASTM D 2000

GRADE "EP" EPDM (Green/Red color code) NSF-61 Certified
-40°F to 250°F (Service Temperature Range)(-40°C to 121°C)
Recommended for water service, diluted acids, alkalies solutions, oil-free air and many other chemical services.
NOT FOR USE IN PETROLEUM APPLICATIONS.

GRADE "E" EPDM (Green color code) NSF-61 Certified
-40°F to 230°F (Service Temperature Range)(-40°C to 110°C)
Recommended for water service, diluted acids, alkalies solutions, oil-free air and many chemical services.
NOT FOR USE IN PETROLEUM APPLICATIONS.

GRADE "T" Nitrile (Orange color code)
-20°F to 180°F (Service Temperature Range)(-29°C to 82°C)
Recommended for petroleum applications. Air with oil vapors and vegetable and mineral oils.
NOT FOR USE IN HOT WATER OR HOT AIR

GRADE "O" Fluoro-Elastomer (Blue color code)
Size Range: 1" - 12" (C style only)
20°F to 300°F (Service Temperature Range)(-29°C to 149°C)
Recommended for high temperature resistance to oxidizing acids, petroleum oils, hydraulic fluids, halogenated hydrocarbons and lubricants

GRADE "L" Silicone (Red color code)
Size Range: 1" - 12" (C style only)
-40°F to 350°F (Service Temperature Range)(-40°C to 177°C)
Recommended for dry, hot air and some high temperature chemical services

GASKET TYPE:
Standard C Style
Flush Gap: 1" - 24"
End Guard: 1" - 12" (Fig. 7004 and 7377)
SlideLOK: 2" - 8"

LUBRICATION:
Standard Gruvlok
Gruvlok Xtreme™ (Do Not use with Grade "L")

WORKING PRESSURE, END LOAD, PIPE END SEPARATION & DEFLECTION FROM CENTER LINE:
Based on standard wall steel pipe with cut or roll grooves in accordance with Gruvlok specifications. Pressure ratings for light wall, stainless steel, aluminum, and ISO pipe available. See technical data section.

COUPLING DATA CHART NOTES

COUPLING DATA CHART NOTES														
Nominal Size	O.D.	Max. Work. Pressure	Max. End Load	Range of Pipe End Separation	Deflection from ℄		Coupling Dimensions			Coupling Bolts		Specified Torque		Approx. Wt. Ea.
					Per Coupling	of Pipe	X	Y	Z	Qty.	Size	Min.	Max.	
In./DN(mm)	*In./mm*	*PSI/bar*	*Lbs./kN*	*In./mm*	*Degrees(°)-Minutes(')*	*In./ft-mm/m*	*In./mm*	*In./mm*	*In./mm*		*In./mm*	*Ft.-Lbs/N-m*		*Lbs./kg*
1	2	3	4	5	6		7			8		9		10

1 Gruvlok Couplings are identified by either the nominal ANSI pipe size in inches or pipe O.D. in millimeters (see column 2).

2 Nominal Outside Diameter of Pipe.

3 Maximum line pressure, including surge, to which a joint can be subjected. Working pressure ratings are based on standard wall steel pipe with standard cut or roll grooves in accordance with Gruvlok specifications. For Performance Data on other than standard wall pipe, refer to Technical data section. **NOTE: For one time field test only, the maximum joint working pressure may be increased to 1.5 times the figure shown unless otherwise noted.**

4 Maximum end load from all interior and/or exterior forces to which the joint can be subjected are based on standard wall steel pipe with standard cut or roll grooves in accordance with Gruvlok specifications.

5 Range of pipe end separation for roll grooved pipe, Double values shown when using cut groove pipe; see page 222 for details.

6 Maximum allowable angular deflection values from centerline when using standard roll grooved pipe; Double values shown when using cut groove pipe; see page 222 for details.

7 "X", "Y", and "Z" are external dimensions for reference purposes only.

8 The quantity of bolts per coupling.

9 Nuts must be tightened alternating and evenly to the specified bolt torque. See individual product installation instructions for additional important information.

10 Approximate weight for a fully assembled coupling with gasket, bolts, and nuts.

FIG. 7401

Rigidlok® Coupling

The Fig. 7401 Rigidlok Coupling is an ideal connector for service and applications that require a rigid connection.

The Fig. 7401 Rigidlok coupling utilizes a technologically advanced housing design that conforms to and grips the pipe.

Coupling installation is fast and easy, remove only one nut and swing the housing over the gasket and into the grooves. The exclusive Guidelok® feature automatically separates the grooved pipe ends and guides the coupling into position as the bolts are tightened. Precisely sized and oriented tines in the housing key section firmly grip the pipe. The combination of these designed in features produce a secure, rigid pipe joint connection.

The Fig. 7401 Rigidlok Coupling is designed for use with roll grooved or cut grooved standard weight and roll grooved lightweight pipe, as well as with grooved-end fittings and valves. The Rigidlok Coupling provides a rigid pipe connection allowing pipe hanging practices per ASME B31 pipe codes.

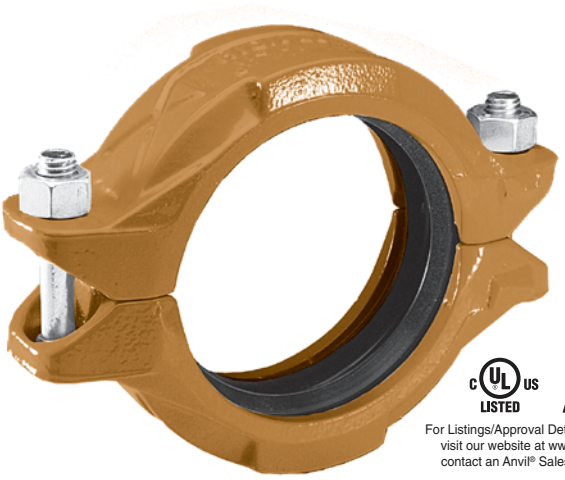

c UL us LISTED FM APPROVED

For Listings/Approval Details and Limitations, visit our website at www.anvilintl.com or contact an Anvil® Sales Representative.

The Fig. 7401 Rigidlok Coupling allows for a maximum working pressure of 750 psi (51.7 bar) when used on standard wall roll or cut grooved pipe.

MATERIAL SPECIFICATIONS

BOLTS:
SAE J429, Grade 5, Zinc Electroplated
ISO 898-1, Class 8.8, Zinc Electroplated followed by a Yellow Chromate Dip

HEAVY HEX NUTS:
ASTM A563, Grade A, Zinc Electroplated
ISO 898-2, Class 8.8, Zinc Electroplated followed by a Yellow Chromate Dip

STAINLESS STEEL BOLTS & NUTS:
304SS bolts and nuts are available as a standard option.
(316SS are available for special order).

HOUSING:
Ductile Iron conforming to ASTM A 536, Grade 65-45-12

COATINGS:
Rust inhibiting paint – Color: ORANGE (standard)
Hot Dipped Zinc Galvanized (optional)
Other Colors Available (IE: RAL3000 and RAL9000)
For other Coating requirements contact an Anvil Representative.

GASKETS: Materials
Properties as designated in accordance with ASTM D 2000

Grade "EP" EPDM (Green and Red color code)
-40°F to 250°F (Service Temperature Range)(-40°C to 121°C)
Recommended for water service, diluted acids, alkalies solutions, oil-free air and many other chemical services.
NOT FOR USE IN PETROLEUM APPLICATIONS.

For hot water applications the use of Gruvlok Extreme Temperature lubricant is recommended. NSF-61 Certified for cold and hot water applications up through 12".

Grade "T" Nitrile (Orange color code)
-20°F to 180°F (Service Temperature Range)(-29°C to 82°C)
Recommended for petroleum applications. air with oil vapors and vegetable and mineral oils.
NOT FOR USE IN HOT WATER OR HOT AIR

Grade "O" Fluoro-Elastomer (Blue color code)
Size Range: 1" - 12" (C style only)
20°F to 300°F (Service Temperature Range)(-29°C to 149°C)
Recommended for high temperature resistance to oxidizing acids, petroleum oils, hydraulic fluids, halogenated hydrocarbons and lubricants.

Grade "L" Silicone (Red color code)
Size Range: 1" - 12" (C style only)
-40°F to 350°F (Service Temperature Range)(-40°C to 177°C)
Recommended for dry, hot air and some high temperature chemical services. Contact an Anvil Representative for availability.

GASKET TYPE:
C Style (1" - 24")
Flush Gap (1" - 24")

LUBRICATION:
Standard
Gruvlok Xtreme™ (Do Not use with Grade "L")

FIG. 7401

Rigidlok® Coupling

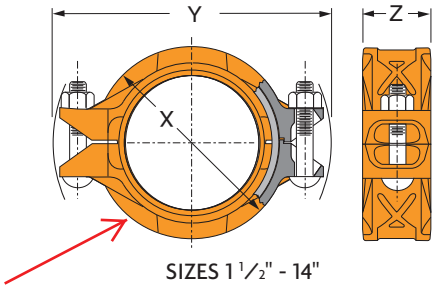

SIZES 1 1/2" - 14"

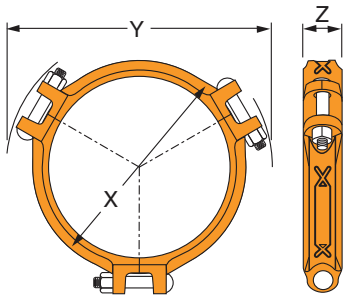

SIZE 16"

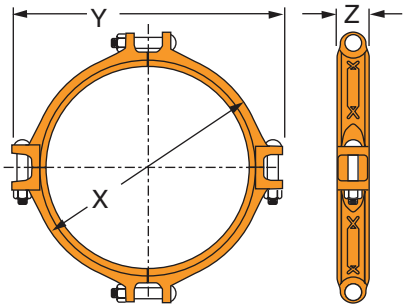

SIZES 18" - 24"

FIGURE 7401 RIGIDLOK COUPLING

Nominal Size	O.D.	Max. Working Pressure†	Max. End Load	Range of Pipe End Separation	Coupling Dimensions			Coupling Bolts*		Specified Torque §		Approx. Wt. Ea.
					X	Y	Z	Qty.	Size	Min.	Max.	
In./DN(mm)	*In./mm*	*PSI/bar*	*Lbs./kN*	*In./mm*	*In./mm*	*In./mm*	*In./mm*		*In./mm*	*Ft.-Lbs/N-M*		*Lbs./kg*
1½	1.900	750	2,126	0-1/32	3	5⅛	1⅞	2	⅜ x 2¼	30	45	1.8
40	*48.3*	*51.7*	*9.46*	*0-0.79*	*76*	*130*	*48*		*M10 x 57*	*40*	*60*	*0.8*
2	2.375	750	3,323	0-1/32	3½	5⅝	1⅞	2	⅜ x 2½	30	45	2.4
50	*60.3*	*51.7*	*14.78*	*0-0.79*	*89*	*143*	*48*		*M10 x 63*	*40*	*60*	*1.1*
2½	2.875	750	4,869	0-1/32	4	6⅛	1⅞	2	⅜ x 2½	30	45	2.9
65	*73.0*	*51.7*	*21.66*	*0-0.79*	*102*	*156*	*48*		*M10 x 63*	*40*	*60*	*1.3*
3 O.D.	*2.996*	*750*	*5,207*	*0-1/32*	*4⅛*	*6⅛*	*1⅞*	*2*	*⅜ x 2½*	*80*	*100*	*3.4*
76.1	76.1	51.7	23.52	0-0.79	105	156	48		M10 x 63	110	150	1.5
3	3.500	750	7,216	0-1/32	4¾	7¼	1⅞	2	½ x 3	80	100	3.6
80	*88.9*	*51.7*	*32.10*	*0-0.79*	*121*	*184*	*48*		*M12 x 76*	*110*	*150*	*1.6*
4	4.500	750	11,928	0-3/32	5⅞	8⅜	2⅛	2	½ x 3	80	100	5.0
100	*114.3*	*51.7*	*53.06*	*0-2.38*	*149*	*213*	*54*		*M12 x 76*	*110*	*150*	*2.3*
5½ O.D.	*5.500*	*750*	*17,819*	0-3/32	*7*	*9¼*	*2⅛*	*2*	*⅝ x 3½*	*100*	*130*	*6.9*
139.7	139.7	51.7	79.26	*0-2.38*	178	248	54		M16 x 85	135	175	3.1
5	5.563	750	18,229	0-3/32	7	10	2⅛	2	⅝ x 3½	100	130	6.9
125	*141.3*	*51.7*	*81.09*	*0-2.38*	*178*	*254*	*54*		*M16 x 85*	*135*	*175*	*3.1*
6½ O.D.	*6.500*	*750*	*24,887*	*0-3/32*	*8*	*11*	*2⅛*	*2*	*⅝ x 3½*	*100*	*130*	*7.6*
165.1	165.1	51.7	110.70	0-2.38	203	279	54		M16 x 85	135	175	3.4
6	6.625	750	25,854	0-3/32	8⅛	11⅛	2⅛	2	⅝ x 3½	100	130	7.9
150	*168.3*	*51.7*	*115.00*	*0-2.38*	*206*	*283*	*54*		*M16 x 85*	*135*	*175*	*3.6*
8	8.625	600	35,056	0-3/32	10½	14⅛	2⅝	2	¾ x 4½	130	180	15.9
200	*219.1*	*41.4*	*155.94*	*0-2.38*	*267*	*359*	*67*		*M20 x 110*	*175*	*245*	*7.2*
10	10.750	500	45,381	0-3/32	12⅞	17½	2⅝	2	1 x 6	200	250	25.6
250	*273.1*	*34.5*	*201.87*	*0-2.38*	*327*	*445*	*67*		*M24 x 150*	*270*	*340*	*11.6*
12	12.750	400	51,070	0-3/32	15	19½	2⅝	2	⅞ x 6	180	220	30.5
300	*323.9*	*27.6*	*227.17*	*0-2.38*	*381*	*495*	*67*		*M22 x 150*	*245*	*300*	*13.8*
14	14.000	300	46,181	0-3/32	16¼	19¾	3	2	⅞ x 5½	180	220	36.1
350	*355.6*	*20.7*	*205.43*	*0-2.38*	*413*	*502*	*76*		*M22 x 140*	*245*	*300*	*16.4*
16	16.000	300	60,319	0-3/32	18⅛	22¼	3	3	⅞ x 5½	180	220	42.0
400	*406.4*	*20.7*	*268.31*	*0-2.38*	*460*	*565*	*76*		*M22 x 140*	*245*	*300*	*19.1*
18	18.000	300	76,341	0-3/32	20½	24⅜	3⅛	4	1 x 4	200	250	51.6
450	*457.2*	*20.7*	*339.58*	*0-2.38*	*521*	*619*	*79*		*M24 x 100*	*270*	*340*	*23.4*
20	20.000	300	94,248	0-3/32	23	26⅞	3⅛	4	1 x 4	200	250	68.3
500	*508.0*	*20.7*	*419.23*	*0-2.38*	*581*	*683*	*79*		*M24 x 100*	*270*	*340*	*31.0*
24	24.000	250	113,097	0-3/32	27⅛	30⅞	3⅛	4	1 x 4	200	250	89.3
600	*609.6*	*17.2*	*503.08*	*0-2.38*	*689*	*784*	*79*		*M24 x 100*	*270*	*340*	*40.5*

NOTE:

Range of Pipe End Seperation values are for roll grooved pipe and may be doubled for cut groove pipe.

†Maximum Working Pressure Rating is for schedule 40 steel pipe. For light wall, stainless steel, aluminum and ISO pipe pressure ratings, please refer to the technical data section.

For additional details see "Coupling Data Chart Notes" on page 17.
* Available in ANSI or metric bolt sizes only as indicated.
§ – For additional Bolt Torque information, see page 222.
See Installation & Assembly directions on page 183.
Not for use in copper systems.

FIG. 7012
Gruvlok Flanges

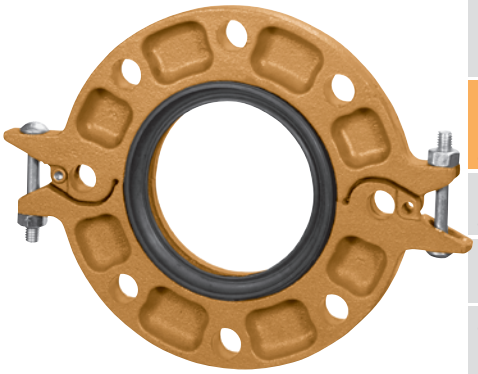

Sizes 2" - 12"

The Gruvlok® Fig. 7012 Flange allows direct connection of Class 125 or Class 150 flanged components to a grooved piping system. The two interlocking halves of the 2" thru 12" sizes of the Gruvlok Flange are hinged for ease of handling, and are drawn together by a latch bolt which eases assembly on the pipe. Precision machined bolt holes, key and mating surfaces assure concentricity and flatness to provide exact fit-up with flanged, lug, and wafer styles of pipe system equipment. A specially designed gasket provides a leak-tight seal on both the pipe and the mating flange face.

The 14" thru 24" sizes of the Gruvlok Fig. 7012 Flange are cast in four segments. A sleek profile gasket design allows quick and easy assembly of the Gruvlok Flange onto the pipe.

All Gruvlok Fig. 7012 Flanges have designed-in anti-rotation tines which bite into and grip the sides of the pipe grooves to provide a secure, rigid connection.

The Gruvlok Fig. 7012 Flange requires the use of a steel adapter insert when used against rubber faced surfaces, wafer/lug design valves and serrated or irregular sealing surfaces. In copper systems a phenolic adapter insert is required, in place of the steel adapter insert. (See Installation and Assembly Instructions Section or contact your Anvil Rep. for details.)

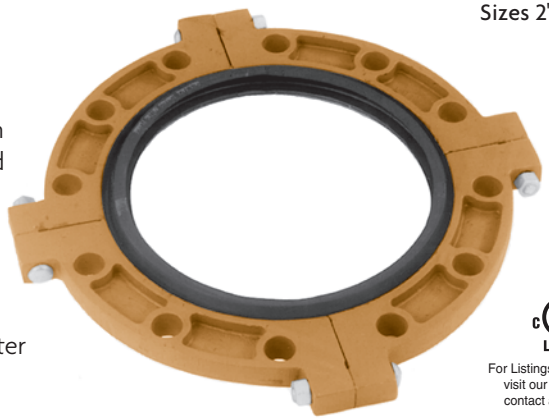

Sizes 14" - 24"

c UL us LISTED FM APPROVED

For Listings/Approval Details and Limitations, visit our website at www.anvilintl.com or contact an Anvil® Sales Representative.

MATERIAL SPECIFICATIONS

LATCH BOLT (2" - 12"), SEGMENT BOLT (14" - 24"):
SAE J429, Grade 5, Zinc Electroplated
ISO 898-1, Class 8.8, Zinc Electroplated followed by a Yellow Chromate Dip

LATCH NUT (2" - 12"), SEGMENT NUT (14" - 24"):
ASTM A563, Grade A, Zinc Electroplated
ISO 898-2, Class 8.8, Zinc Electroplated followed by a Yellow Chromate Dip

HOUSING:
Ductile Iron conforming to ASTM A 536, Grade 65-45-12.

COATINGS:
Rust inhibiting paint – Color: ORANGE (standard), Red (optional)
Hot Dipped Zinc Galvanized (optional)
Other Colors Available (IE: RAL3000 and RAL9000)
For other Coating requirements contact an Anvil Representative.

GASKETS: Materials
Properties as designated in accordance with ASTM D 2000

Grade "E" EPDM (Green color code)
-40°F to 230°F (Service Temperature Range)(-40°C to 110°C)
Recommended for water service, diluted acids, alkalies solutions, oil-free air and many other chemical services.
NOT FOR USE IN PETROLEUM APPLICATIONS.

Grade "T" Nitrile (Orange color code)
-20°F to 180°F (Service Temperature Range)(-29°C to 82°C)
Recommended for petroleum applications. air with oil vapors and vegetable and mineral oils.
NOT FOR USE IN HOT WATER.

LUBRICATION:
Standard Gruvlok
Gruvlok Xtreme™ (Do Not use with Grade "L")

FIG. 7012

Gruvlok Flanges

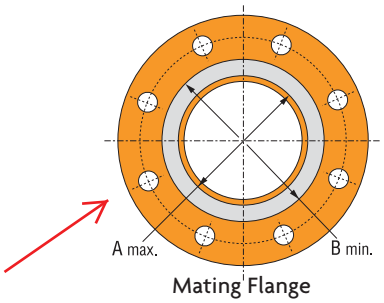

Mating Flange

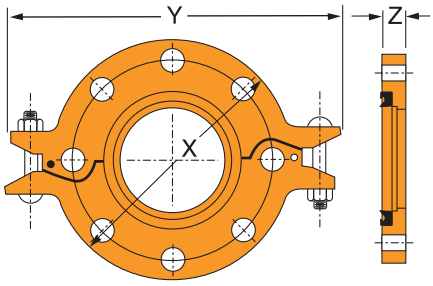

2"-12" sizes

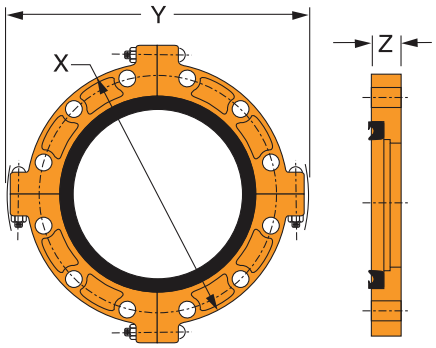

14"-24" sizes

GRUVLOK FIGURE 7012 FLANGE: ANSI CLASS 150 OR ISO PN10 OR PN16 BOLT PATTERNS

Nominal Size	O.D.	Max. Working Pressure†	Max. End Load▼	Latch Bolt			Dimensions			Sealing Surface		Mating Flange Bolts						Approx. Wt. Ea.
				Latch Bolt Size*	Specified Torque §		X	Y	Z	A Max.	B Min.	Mating Flange Bolts		Bolt Circle Diameter	Bolt Hole Diameter	Specified Torque §		
					Min.	Max.						Qty. ANSI	Size (ANSI)			Min.	Max.	
In./DN(mm)	*In./mm*	*PSI/bar*	*Lbs./kN*	*In./mm*	*Ft.-Lbs/N-m*		*In./mm*	*In./mm*	*In./mm*	*In./mm*	*In./mm*	*PN10 (16)*	*in. (ISO) mm*	*In./mm*	*In./mm*	*Ft.-Lbs/N-m*		*Lbs./Kg*
2	2.375	300	1,329	⅜ x 2¾	30	45	6¼	8⅜	¾	2⅜	3⁷⁄₁₆	4	⅝ x 2¾	4¾	¾	110	140	4.2
50	*60.3*	*20.7*	*5.91*	*M10 x 70*	*40*	*60*	*159*	*213*	*19*	*60*	*87*	*4*	*M16 x 70*	*120.7*	*19.1*	*149*	*190*	*1.9*
2½	2.875	300	1,948	⅜ x 2¾	30	45	7	9½	¾	2⅞	4	4	⅝ x 2¾	5½	¾	110	140	4.6
65	*73.0*	*20.7*	*8.66*	*M10 x 70*	*40*	*60*	*178*	*241*	*19*	*73*	*102*	*-*	*M16 x 70*	*139.7*	*19.1*	*149*	*190*	*2.1*
3 O.D.	*2.996*	*300*	*2,115*	*-*	*30*	*45*	*7¼*	*9¾*	*¾*	*3*	*4⅛*	*-*	*-*	*-*	*-*	*110*	*140*	*4.8*
76.1	76.1	20.7	9.41	M10 x 70	40	60	184	248	19	76	105	4	M16 x 70	-	-	149	190	2.2
3	3.500	300	2,886	⅜ x 2¾	30	45	7⅞	10½	¾	3½	4⁹⁄₁₆	4	⅝ x 2¾	6	¾	110	140	6.0
88.9	*88.9*	*20.7*	*12.84*	*M10 x 70*	*40*	*60*	*200*	*267*	*19*	*89*	*116*	*8*	*M16 x 70*	*152.4*	*19.1*	*149*	*190*	*2.7*
4	4.500	300	4,771	⅜ x 2¾	30	45	9	11½	¾	4½	5⁹⁄₁₆	8	⅝ x 2¾	7½	¾	110	140	6.3
100	*114.3*	*20.7*	*21.22*	*M10 x 70*	*40*	*60*	*229*	*292*	*19*	*114*	*141*	*8*	*M16 x 70*	*190.5*	*19.1*	*149*	*190*	*2.9*
5½ O.D.	*5.500*	*300*	*7,127*	*-*	*30*	*45*	*9⅞*	*12⅞*	*⅞*	*5⁹⁄₁₆*	*6¾*	*-*	*-*	*-*	*-*	*220*	*250*	*15.6*
139.7	139.7	20.7	31.70	M10 x 70	40	60	251	327	22	141	171	8	M16 x 75	-	-	298	339	7.1
5	5.563	300	7,292	⅜ x 2¾	30	45	10	12½	⅞	5⁹⁄₁₆	6¾	8	¾ x 2⅞	8½	⅞	220	250	8.8
125	*141.3*	*20.7*	*32.44*	*M10 x 70*	*40*	*60*	*254*	*318*	*22*	*141*	*171*	*-*	*-*	*215.9*	*22.2*	*298*	*339*	*4.0*
6½ O.D.	*6.500*	*300*	*9,955*	*-*	*30*	*45*	*11¼*	*14*	*⅞*	*6⅝*	*7¹³⁄₁₆*	*-*	*-*	*-*	*-*	*220*	*250*	*9.7*
165.1	165.1	20.7	44.28	M10 x 70	40	60	286	356	22	168	198	8	M20 x 80	-	-	298	339	4.4
6	6.625	300	10,341	⅜ x 2¾	30	45	11	14	⅞	6⅝	7¹³⁄₁₆	8	¾ x 3⅛	9½	⅞	220	250	9.6
150	*168.3*	*20.7*	*46.00*	*M10 x 70*	*40*	*60*	*279*	*356*	*22*	*168*	*198*	*8*	*M20 x 80*	*241.1*	*22.2*	*298*	*339*	*4.4*
8	8.625	300	17,528	⅜ x 2¾	30	45	13½	16½	1	8⅝	10	8	¾ x 3¼	11¾	⅞	220	250	15.6
200	*219.1*	*20.7*	*77.97*	*M10 x 70*	*40*	*60*	*343*	*419*	*25*	*219*	*254*	*8 (12)*	*M20 x 80*	*298.5*	*22.2*	*298*	*339*	*7.1*
10	10.750	300	27,229	⅜ x 2¾	30	45	16	19	1	10¾	12⅛	12	⅞ x 3½	14¼	1	320	400	18.2
250	*273.1*	*20.7*	*121.12*	*M10 x 70*	*40*	*60*	*406*	*483*	*25*	*273*	*308*	*12*	*M20 x 90*	*362.0*	*25.4*	*439*	*542*	*8.3*
12	12.750	300	38,303	⅜ x 2¾	30	45	19	21¾	1¼	12¾	14⅛	12	⅞ x 3¾	17	1	320	400	29.9
300	*323.9*	*20.7*	*170.38*	*M10 x 70*	*40*	*60*	*483*	*552*	*32*	*324*	*359*	*12*	*-*	*431.8*	*25.4*	*439*	*542*	*13.6*
14	14.000	300	46,181	⅝ x 4¼	100	130	21	24	1½	14	16	12	1 x 4¼	18¾	1⅛	360	520	52.5
350	*355.6*	*20.7*	*205.43*	*-*	*136*	*176*	*533*	*610*	*38*	*356*	*406*	*-*	*-*	*476.3*	*28.6*	*488*	*705*	*23.8*
16	16.000	300	60,319	⅝ x 4¼	100	130	23½	26½	1½	16	18	16	1 x 4¼	21¼	1⅛	360	520	67.0
400	*406.4*	*20.7*	*268.31*	*-*	*136*	*176*	*597*	*673*	*38*	*406*	*457*	*-*	*-*	*539.8*	*28.6*	*488*	*705*	*30.4*
18	18.000	300	76,341	¾ x 5	130	180	25	29	1⅝	18	20	16	1⅛ x 4¾	22¾	1¼	450	725	82.5
450	*457.2*	*20.7*	*339.58*	*-*	*176*	*244*	*635*	*737*	*41*	*457*	*508*	*-*	*–*	*577.9*	*31.8*	*610*	*983*	*37.4*
20	20.000	300	94,248	¾ x 5	130	180	27½	31½	1¾	20	22	20	1⅛ x 4¾	25	1¼	450	725	106.5
500	*508.0*	*20.7*	*419.23*	*-*	*176*	*244*	*699*	*800*	*44*	*508*	*559*	*-*	*–*	*635.0*	*31.8*	*610*	*983*	*48.3*
24	24.000	250	113,097	⅞ x 5½	180	220	32	36½	1⅞	24	26	20	1¼ x 5½	29½	1⅜	620	1,000	138.5
600	*609.6*	*17.2*	*503.08*	*-*	*244*	*298*	*813*	*927*	*48*	*610*	*660*	*-*	*-*	*749.3*	*34.92*	*841*	*1,356*	*62.8*

NOTES:

†Maximum Working Pressure Rating is for schedule 40 steel pipe. For light wall, stainless steel, aluminum and ISO pipe pressure ratings, please refer to the technical data section.

The Gruvlok Flange bolt hole pattern conforms to ANSI Class 150 and Class 125 flanges.

To avoid interference issues, flanges cannot be assembled directly to Series 7700 butterfly valve. Flange can be assembled to one side of series 7500 and 7600 valve only.

Mating flange bolts must be at least Intermediate Strength Bolting per ASME B16.5. Bolts with material properties equal or greater than SAE J429 Grade 5 are acceptable.

For additional details see "Coupling Data Chart Notes" on page 17.
+ PN 16 uses M24 x 90 (PN) Dimensions for bolt circle PN 10 & 16 Flange.
* Available in ANSI or metric bolt sizes only as indicated.
▼ Based on use with standard wall pipe.
§ – For additional Bolt Torque information, see page 222.
See Installation & Assembly directions on page 198-200.

FIG. 7012
Gruvlok Flanges

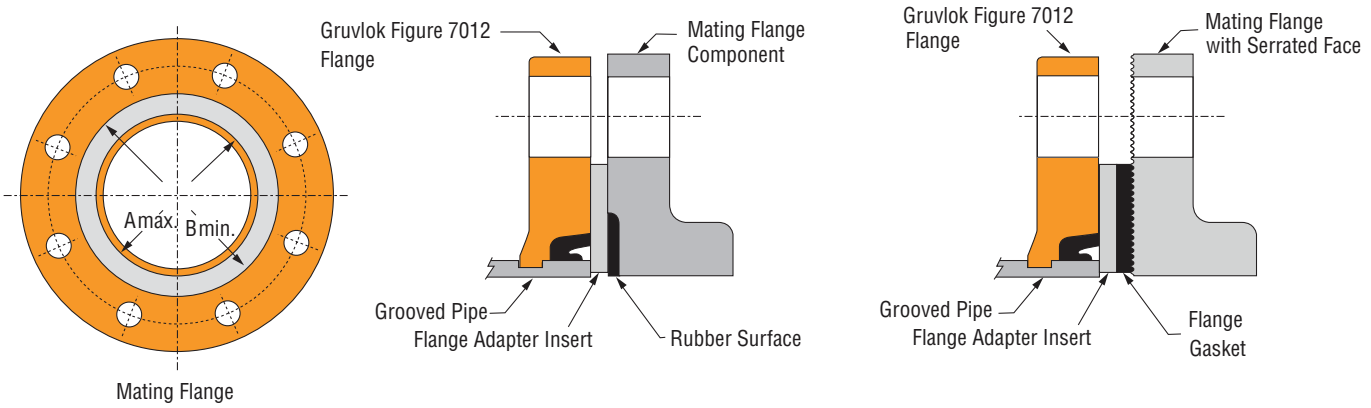

A. The sealing surfaces A Max. to B Min. of the mating flange must be free from gouges, undulations and deformities of any type to ensure proper sealing of the gasket.

B. Gruvlok Flanges are to be assembled on butterfly valves so as not to interfere with actuator or handle operation.

C. Do not use Gruvlok Flanges within 90 degrees of one another on standard fittings because the outside dimensions may cause interference.

D. Gruvlok Flanges should not be used as anchor points for tierods across non-restrained joints.

E. Fig. 7012 Gruvlok Flange sealing gaskets require a hard flat surface for adequate sealing. The use of a Gruvlok Flange Adapter Insert is required for applications against rubber faced valves or other equipment. The Gruvlok Flange Adapter Insert is installed between the Gruvlok Flange sealing gasket and the mating flange or surface to provide a good sealing surface area.

F. Gruvlok Flanges are not recommended for use against formed rubber flanges.

G. Contact an Anvil Representative for Di-Electric Flange connections.

Applications which require a Gruvlok Flange Adapter Insert (page 49):

1. When mating to a wafer valve (lug valve), if the valve is rubber faced in the area designated by the sealing surface dimensions (A Max. to B Min.), place the Gruvlok Flange Adapter Insert between the valve and the Gruvlok flange.
2. When mating to a rubber-faced metal flange, the Gruvlok Flange Adapter Insert is placed between the Gruvlok Flange and the rubber-faced flange.
3. When mating to a serrated flange surface, a standard full-faced flange gasket is installed against the serrated flange face and the Gruvlok Flange Adapter Insert is placed between the Gruvlok Flange and the standard Flange gasket.
4. When mating to valves or other component equipment where the flange face has an insert, use procedure described in note 3.

FIG. 7045

Clamp-T, FPT Branch

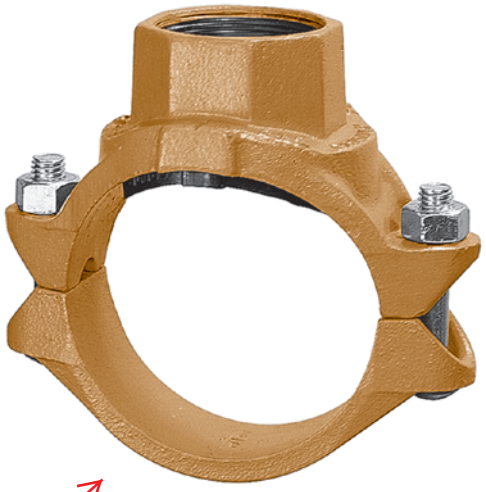

c UL us LISTED FM APPROVED

For Listings/Approval Details and Limitations, visit our website at www.anvilintl.com or contact an Anvil® Sales Representative.

The Gruvlok Clamp-T provides a quick and easy outlet at any location along the pipe. A hole drilled or cut in the pipe to receive the locating collar of the Clamp-T is all that is required. The full, smooth outlet area provides for optimum flow characteristics.

The Clamp-T housing is specially engineered to conform to the pipe O.D. and the Clamp-T gasket providing a leak tight reliable seal in both positive pressure and vacuum conditions. The maximum working pressure for all sizes is 500 PSI (34.5 bar) when assembled on standard wall steel pipe.

The Gruvlok Clamp-T provides for a branch or cross connection in light wall or standard wall steel pipe.

The Fig. 7045 Clamp-T female pipe thread branch is available with NPT or ISO 7/1 connection and the Fig. 7046 Clamp-T has grooved-end branch connection.

Clamp-T cross connections are available in various sizes allowing greater versatility in piping design.

NOTE: Variable End Configurations are Possible — Thd x Thd and Gr. x Thd.
Sizes — 2" x 1/2" through 8" x 4"

CLAMP-T FLOW DATA (FRICTIONAL RESISTANCE)

Branch Size Inches	Fig. 7045 Threaded Branch	
	C.V. Value	Equiv. Pipe Length Feet
DN/mm		*Meters*
1/2 *15*	22 -	1.0 *0.3*
3/4 *20*	25 -	2.0 *0.6*
1 *25*	44 -	2.0 *0.6*
1 1/4 *32*	76 -	2.5 *0.8*
1 1/2 *40*	89 -	4.0 *1.2*
2 *50*	164 -	3.5 *1.1*
2 1/2 *65*	152 -	12.5 *3.8*
3 *80*	318 -	8.5 *2.6*
4 *100*	536 -	8.0 *2.4*

MATERIAL SPECIFICATIONS

BOLTS:
SAE J429, Grade 5, Zinc Electroplated
ISO 898-1, Class 8.8, Zinc Electroplated followed by a Yellow Chromate Dip

HEAVY HEX NUTS:
ASTM A563, Grade A, Zinc Electroplated
ISO 898-2, Class 8.8, Zinc Electroplated followed by a Yellow Chromate Dip

U-BOLT:
Cold drawn steel and zinc plated.

HOUSING:
Ductile Iron conforming to ASTM A 536, Grade 65-45-12

COATINGS:
Rust inhibiting paint – Color: ORANGE (standard)
Hot Dipped Zinc Galvanized (optional)
Other Colors Available (IE: RAL3000 and RAL9000)
For other Coating requirements Contact an Anvil Representative for more information.

GASKETS: Materials
Properties as designated in accordance with ASTM D 2000

Grade "E" EPDM (Green color code)
-40°F to 230°F (Service Temperature Range)(-40°C to 110°C)
Recommended for water service, diluted acids, alkalies solutions, oil-free air and many other chemical services.
NOT FOR USE IN PETROLEUM APPLICATIONS.

Grade "T" Nitrile (Orange color code)
-20°F to 180°F (Service Temperature Range)(-29°C to 82°C)
Recommended for petroleum applications. air with oil vapors and vegetable and mineral oils.
NOT FOR USE IN HOT WATER OR HOT AIR.

LUBRICATION:
Standard Gruvlok
Gruvlok Xtreme™ (Do Not use with Grade "L")

FIG. 7045

Clamp-T, FPT Branch

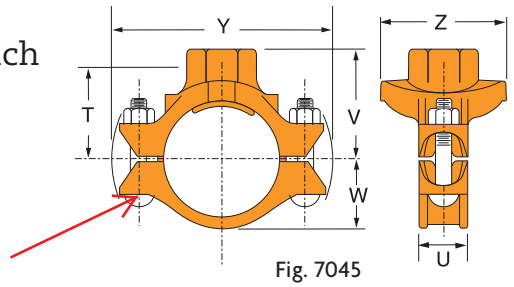

Fig. 7045

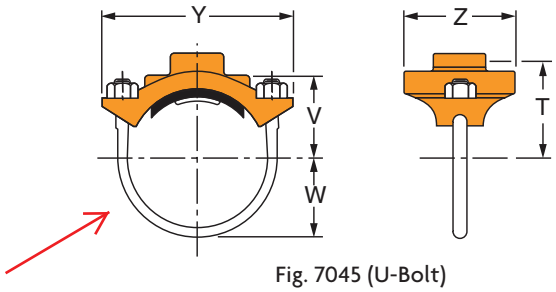

Fig. 7045 (U-Bolt)

FIGURE 7045-FPT BRANCH (TABLE CONTINUES TO NEXT PAGE)

Nominal Size	O.D.	Hole Dimensions		▼ Max. Working Pressure	Clamp-T Dimensions						Bolt Size	Specified Torque §		Approx. Wt. Each
		Min. Diameter	Max. Diameter		T	U	V Threaded	W	Y	Z		Min.	Max.	
In./DN(mm)	*In./mm*	*In./mm*	*In./mm*	*PSI/bar*	*In./mm*	*In./mm*	*In./mm*	*In./mm*	*In./mm*	*In./mm*	*In./mm*	*Ft.-Lbs/N-m*		*Lbs./Kg*
2 x ½ *50 x 15*	2.375 x 0.840 *60.3 x 21.3*	1½ *38*	1⅝ *41*	500 *34.5*	2 3/16 *56*	9/16 *14*	2⅝ *67*	½ *12*	5½ *140*	3 *76*	½ U-Bolt -	30	40	2.3 *1.0*
2 x ¾ *50 x 20*	2.375 x 1.050 *60.3 x 26.7*	1½ *38*	1⅝ *41*	500 *34.5*	2 1/16 *52*	9/16 *14*	2⅝ *67*	1½ *38*	5½ *140*	3 *76*	½ U-Bolt -	30	40	2.3 *1.0*
2 x 1 *50 x 25*	2.375 x 1.315 *60.3 x 33.7*	1½ *38*	1⅝ *41*	500 *34.5*	1 15/16 *51*	9/16 *14*	2⅝ *67*	1½ *38*	5½ *140*	3 *76*	½ U-Bolt -	30	40	2.6 *1.2*
2 x 1¼ *50 x 32*	2.375 x 1.660 *60.3 x 42.4*	2 *51*	2⅛ *54*	500 *34.5*	2 3/16 *55*	9/16 *14*	2⅞ *73*	1½ *38*	5½ *140*	3½ *89*	½ U-Bolt -	30	40	2.7 *1.2*
2 x 1½ *50 x 40*	2.375 x 1.900 *60.3 x 48.3*	2 *51*	2⅛ *54*	500 *34.5*	2 3/16 *55*	9/16 *14*	2⅞ *73*	1½ *38*	7 *178*	3½ *89*	½ U-Bolt -	30	40	2.5 *1.1*
2½ x ½ *65 x 15*	2.875 x 0.840 *73.0 x 21.3*	1½ *38*	1⅝ *41*	500 *34.5*	2 7/16 *62*	9/16 *14*	2⅞ *73*	1¾ *44*	5½ *140*	3 *76*	½ U-Bolt -	30	40	3.0 *1.4*
2½ x ¾ *65 x 20*	2.875 x 1.050 *73.0 x 26.7*	1½ *38*	1⅝ *41*	500 *34.5*	2 5/16 *59*	9/16 *14*	2⅞ *73*	1¾ *44*	5½ *140*	3 *76*	½ U-Bolt -	30	40	2.9 *1.3*
2½ x 1 *65 x 25*	2.875 x 1.315 *73.0 x 33.7*	1½ *38*	1⅝ *41*	500 *34.5*	2 3/16 *55*	9/16 *14*	2⅞ *73*	1¾ *44*	6⅛ *156*	3 *76*	½ U-Bolt -	30	40	2.9 *1.3*
2½ x 1¼ *65 x 32*	2.875 x 1.660 *73.0 x 42.4*	2 *51*	2⅛ *54*	500 *34.5*	2 7/16 *62*	9/16 *14*	3⅛ *79*	1¾ *44*	6⅛ *156*	3⅜ *86*	½ U-Bolt -	30	40	3.4 *1.5*
2½ x 1½ *65 x 40*	2.875 x 1.900 *73.0 x 48.3*	2 *51*	2⅛ *54*	500 *34.5*	2 7/16 *62*	9/16 *14*	3⅛ *79*	1¾ *44*	6⅛ *156*	3⅜ *86*	½ U-Bolt -	30	40	3.4 *1.5*
3 x ½ *80 x 15*	3.500 x 0.840 *88.9 x 21.3*	1½ *38*	1⅝ *41*	500 *34.5*	2 9/16 *65*	9/16 *14*	3 *76*	2⅛ *54*	7 *178*	3¾ *95*	½ U-Bolt -	30	40	2.8 *1.2*
3 x ¾ *80 x 20*	3.500 x 1.050 *88.9 x 26.7*	1½ *38*	1⅝ *41*	500 *34.5*	2 7/16 *62*	9/16 *14*	3 *76*	2⅛ *54*	7 *178*	3¾ *95*	½ U-Bolt -	30	40	2.7 *1.2*
3 x 1 *80 x 25*	3.500 x 1.315 *88.9 x 33.7*	1½ *38*	1⅝ *41*	500 *34.5*	2 5/16 *59*	9/16 *14*	3 *76*	2⅛ *54*	7 *178*	3¾ *95*	½ U-Bolt -	30	40	2.7 *1.2*
3 x 1¼ *80 x 32*	3.500 x 1.660 *88.9 x 42.4*	2 *51*	2⅛ *54*	500 *34.5*	2 11/16 *68*	1½ *38*	3⅜ *86*	2⅛ *54*	6⅞ *175*	3¾ *95*	½x 2¾ -	80	100	3.4 *1.5*
3 x 1½ *80 x 40*	3.500 x 1.900 *88.9 x 48.3*	2 *51*	2⅛ *54*	500 *34.5*	2 11/16 *68*	1½ *38*	3⅜ *86*	2⅛ *54*	6⅞ *175*	3¾ *95*	½ x 2¾ -	80	100	4.4 *2.0*
3 x 2 *80 x 50*	3.500 x 2.375 *88.9 x 60.3*	2½ *64*	2⅝ *67*	500 *34.5*	2 11/16 *68*	1½ *38*	3⅜ *86*	2⅛ *54*	6⅞ *175*	4⅛ *105*	½ x 2¾ -	80	100	4.6 *2.1*
4 x ½ *100 x 15*	4.500 x 0.840 *114.3 x 21.3*	1½ *38*	1⅝ *41*	500 *34.5*	3 1/16 *76*	9/16 *14*	3½ *89*	2⅝ *67*	7¾ *197*	3¾ *95*	½ U-Bolt -	30	40	2.9 *1.3*
4 x ¾ *100 x 20*	4.500 x 1.050 *114.3 x 26.7*	1½ *38*	1⅝ *41*	500 *34.5*	3 1/16 *78*	9/16 *14*	3½ *89*	2⅝ *67*	7¾ *197*	3¾ *95*	½ U-Bolt -	30	40	2.8 *1.3*
4 x 1 *100 x 25*	4.500 x 1.315 *114.3 x 33.7*	1½ *38*	1⅝ *41*	500 *34.5*	2 13/16 *73*	9/16 *14*	3½ *89*	2⅝ *67*	7¾ *197*	3¾ *95*	½ U-Bolt -	30	40	2.7 *1.2*
4 x 1¼ *100 x 32*	4.500 x 1.660 *114.3 x 42.4*	2 *51*	2⅛ *54*	500 *34.5*	3 3/16 *81*	1⅞ *48*	3⅞ *98*	2⅝ *67*	7½ *191*	3¾ *95*	½ x 2¾ -	80	100	4.5 *2.0*
4 x 1½ *100 x 40*	4.500 x 1.900 *114.3 x 48.3*	2 *51*	2⅛ *54*	500 *34.5*	3 3/16 *81*	1⅞ *48*	3⅞ *98*	2⅝ *67*	7½ *191*	3¾ *95*	½ x 2¾ -	80	100	4.6 *2.1*
4 x 2 *100 x 50*	4.500 x 2.375 *114.3 x 60.3*	2½ *64*	2⅝ *67*	500 *34.5*	3 5/16 *84*	1⅞ *48*	4 *102*	2⅝ *67*	7½ *191*	4⅛ *105*	½ x 2¾ -	80	100	7.7 *3.5*
4 x 2½ *100 x 65*	4.500 x 2.875 *114.3 x 73.0*	2¾ *70*	2⅞ *73*	500 *34.5*	3 11/16 *78*	1⅞ *48*	4 *102*	2⅝ *67*	7½ *191*	4⅜ *111*	½ x 2¾ -	80	100	5.2 *2.4*
4 x 3 O.D. 100 x 80	*4.500 x 2.996* 114.3 x 76.1	*2¾* 70	*2⅞* 73	*500* 34.5	*3* 76	*1⅞* 48	*4* 102	*2⅝* 67	*7½* 191	*4⅜* 111	*½ x 2¾* -	*80*	*100*	*5.2* 2.4
4 x 3 *100 x 80*	4.500 x 3.500 *114.3 x 88.9*	3½ *89*	3⅝ *92*	500 *34.5*	3¼ *83*	1⅞ *48*	4¼ *108*	2⅝ *67*	7½ *191*	5¼ *133*	½ x 3½ -	80	100	6.5 *2.9*

NOTE:
2½", 5" and 6" Nom. Run pipe size Clamp-T may be used on 3" O.D., 5½" O.D. and 6½" O.D. pipe.

(Additional larger sizes on next page.)

▼ Based on use with standard wall pipe.
§ – For additional Bolt Torque information, see page 222.
See Installation & Assembly directions on page 202.
Not for use with copper systems.

FIG. 7046

Clamp-T, Grooved Branch

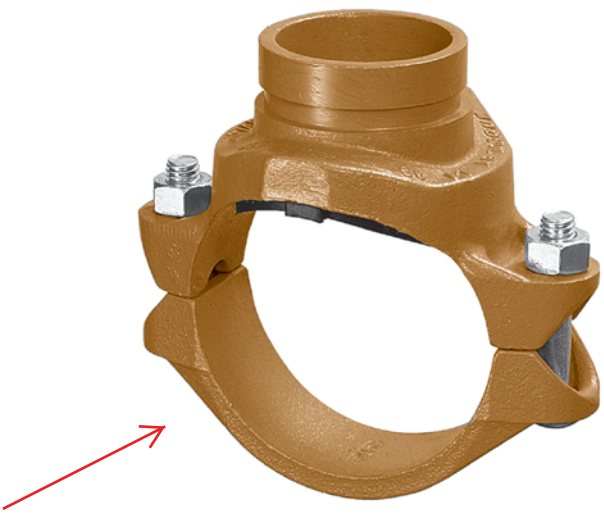

c UL us LISTED FM APPROVED

For Listings/Approval Details and Limitations, visit our website at www.anvilintl.com or contact an Anvil® Sales Representative.

The Gruvlok Clamp-T provides a quick and easy outlet at any location along the pipe. A hole drilled or cut in the pipe to receive the locating collar of the Clamp-T is all that is required. The full, smooth outlet area provides for optimum flow characteristics.

The Clamp-T housing is specially engineered to conform to the pipe O.D. and the Clamp-T gasket providing a leak-tight reliable seal in both positive pressure and vacuum conditions. The maximum working pressure for all sizes is 500 PSI (34.5 bar) when assembled on standard wall steel pipe.

The Gruvlok Clamp-T provides for a branch or cross connection in light wall or standard wall steel pipe.

Clamp-T cross connections are available in most sizes allowing greater versatility in piping design.

CLAMP-T FLOW DATA (FRICTIONAL RESISTANCE)

Branch Size	Fig. 7046 Grooved Branch	
	C.V. Value	Equiv. Pipe Length
In./DN/mm		*Ft./Meters*
1¼ *32*	5.4	5.0 *1.5*
1½ *40*	95	3.5 *1.1*
2 *50*	148	4.5 *1.4*
2½ *65*	205	7.0 *2.1*
3 *80*	294	9.5 *2.9*
4 *100*	571	7.0 *2.1*

MATERIAL SPECIFICATIONS

BOLTS:
SAE J429, Grade 5, Zinc Electroplated
ISO 898-1, Class 8.8, Zinc Electroplated followed by a Yellow Chromate Dip

HEAVY HEX NUTS:
ASTM A563, Grade A, Zinc Electroplated
ISO 898-2, Class 8.8, Zinc Electroplated followed by a Yellow Chromate Dip

U-BOLT:
Cold drawn steel and zinc plated.

HOUSING:
Ductile Iron conforming to ASTM A 536, Grade 65-45-12

COATINGS:
Rust inhibiting paint – Color: ORANGE (standard)
Hot Dipped Zinc Galvanized (optional)
Other Colors Available (IE: RAL3000 and RAL9000)
For other Coating requirements contact an Anvil Representative for more information.

GASKETS: Materials
Properties as designated in accordance with ASTM D 2000

Grade "E" EPDM (Green color code)
-40°F to 230°F (Service Temperature Range)(-40°C to 110°C)
Recommended for water service, diluted acids, alkalies solutions, oil-free air and many other chemical services.
NOT FOR USE IN PETROLEUM APPLICATIONS.

Grade "T" Nitrile (Orange color code)
-20°F to 180°F (Service Temperature Range)(-29°C to 82°C)
Recommended for petroleum applications. air with oil vapors and vegetable and mineral oils.
NOT FOR USE IN HOT WATER OR HOT AIR.

LUBRICATION:
Standard Gruvlok
Gruvlok Xtreme™ (Do Not use with Grade "L")

FIG. 7046

Clamp-T, Grooved Branch

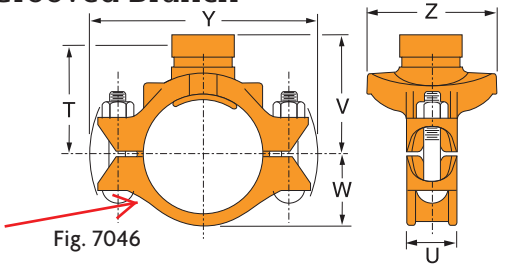

Fig. 7046

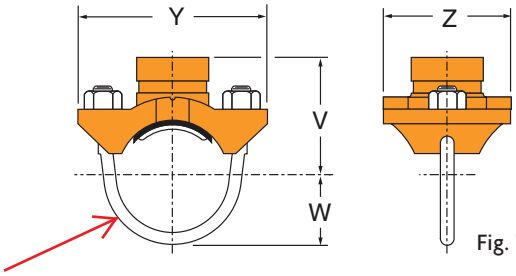

Fig. 7046 (U-Bolt)

FIGURE 7046-GR BRANCH

Nominal Size	O.D.	Hole Dimensions		▼ Max. Working Pressure	Clamp-T Dimensions					Bolt Size	Specified Torque §		Approx. Wt. Each
		Min. Diameter	Max. Diameter		U	V Grooved	W	Y	Z		Min.	Max.	
In./DN(mm)	*In./mm*	*In./mm*	*In./mm*	*PSI/bar*	*In./mm*	*In./mm*	*In./mm*	*In./mm*	*In./mm*	*In./mm*	*Ft.-Lbs/N-m*		*Lbs./Kg*
2½ x 1¼•	2.875 x 1.660	2	2⅛	500	9/16	3⅛	1¾	6⅛	3½	½ U-Bolt	30	40	3.4
65 x 32	*73.0 x 42.4*	*51*	*54*	*34.5*	*14*	*79*	*44*	*156*	*89*	-			*1.5*
2½ x 1½	2.875 x 1.900	2	2⅛	500	9/16	3⅛	1¾	6⅛	3½	½ U-Bolt	30	40	3.4
65 x 40	*73.0 x 48.3*	*51*	*54*	*34.5*	*14*	*79*	*44*	*156*	*89*	-			*1.5*
3 x 1¼	3.500 x 1.660	2	2⅛	500	1½	3½	2⅛	6⅞	3¾	½ x 2¾	80	100	3.4
80 x 32	*88.9 x 42.4*	*51*	*54*	*34.5*	*38*	*89*	*54*	*175*	*95*	-			*1.5*
3 x 1½	3.500 x 1.900	2	2⅛	500	1½	3½	2⅛	6⅞	3¾	½ x 2¾	80	100	4.4
80 x 40	*88.9 x 48.3*	*51*	*54*	*34.5*	*38*	*89*	*54*	*175*	*95*	-			*2.0*
3 x 2	3.500 x 2.375	2½	2⅝	500	1½	3½	2⅛	6⅞	4⅛	½ x 2¾	80	100	4.6
80 x 50	*88.9 x 60.3*	*64*	*67*	*34.5*	*38*	*89*	*54*	*175*	*105*	-			*2.1*
4 x 1¼	4.500 x 1.660	2	2⅛	500	1⅞	4	2⅝	7½	3¾	½ x 2¾	80	100	4.2
100 x 32	*114.3 x 42.4*	*51*	*54*	*34.5*	*48*	*102*	*67*	*191*	*95*	-			*1.9*
4 x 1½	4.500 x 1.900	2	2⅛	500	1⅞	4	2⅝	7½	3¾	½ x 2¾	80	100	4.3
100 x 40	*114.3 x 48.3*	*51*	*54*	*34.5*	*48*	*102*	*67*	*191*	*95*	-			*2.0*
4 x 2	4.500 x 2.375	2½	2⅝	500	1⅞	4	2⅝	7½	4⅛	½ x 2¾	80	100	4.6
100 x 50	*114.3 x 60.3*	*64*	*67*	*34.5*	*48*	*102*	*67*	*191*	*105*	-			*2.1*
4 x 2½	4.500 x 2.875	2¾	2⅞	500	1⅞	4	2⅝	7½	4⅜	½ x 2¾	80	100	5.0
100 x 65	*114.3 x 73.0*	*70*	*73*	*34.5*	*48*	*102*	*67*	*191*	*111*	-			*2.3*
4 x 3 O.D.	*4.500 x 2.996*	*2¾*	*2⅞*	*500*	*1⅞*	*4*	*2⅝*	*7½*	*4⅜*	*½ x 2¾*	*80*	*100*	*5.0*
100 x 80	114.3 x 76.1	70	73	34.5	48	102	67	191	111	-			2.3
4 x 3	4.500 x 3.500	3½	3⅝	500	1⅞	4	2⅝	7½	5¼	½ x 3½	80	100	5.6
100 x 80	*114.3 x 88.9*	*89*	*92*	*34.5*	*48*	*102*	*67*	*191*	*133*	-			*2.5*
5 x 1¼	5.563 x 1.660	2	2⅛	500	1⅞	4¼	3¼	9⅛	3¾	⅝ x 3¼	80	100	5.6
125 x 32	*141.3 x 42.4*	*51*	*54*	*34.5*	*48*	*108*	*83*	*232*	*95*	-			*2.5*
5 x 1½	5.563 x 1.900	2	2⅛	500	1⅞	4¼	3¼	9⅛	3¾	⅝ x 3¼	100	130	5.6
125 x 40	*141.3 x 48.3*	*51*	*54*	*34.5*	*48*	*108*	*83*	*232*	*95*	-			*2.5*
5 x 2	5.563 x 2.375	2½	2⅝	500	1⅞	4¼	3¼	9⅛	4⅛	⅝ x 3¼	100	130	5.5
125 x 50	*141.3 x 60.3*	*64*	*67*	*34.5*	*48*	*108*	*83*	*232*	*105*	-			*2.5*
5 x 2½	5.563 x 2.875	2¾	2⅞	500	1⅞	4¼	3¼	9⅛	4⅜	⅝ x 3¼	100	130	5.8
125 x 65	*141.3 x 73.0*	*70*	*73*	*34.5*	*48*	*108*	*83*	*232*	*111*	-			*2.6*
5 x 3	5.563 x 3.500	3½	3⅝	500	1⅞	4⅝	3¼	9⅛	5¼	⅝ x 3¼	100	130	7.1
125 x 80	*141.3 x 88.9*	*89*	*92*	*34.5*	*48*	*117*	*83*	*232*	*133*	-			*3.2*
6 x 1¼	6.625 x 1.660	2	2⅛	500	2	5	3⅜	10⅛	3¾	⅝ x 4¼	100	130	7.2
150 x 32	*168.3 x 42.4*	*51*	*54*	*34.5*	*51*	*127*	*98*	*257*	*95*	*			*3.3*
6 x 1½	6.625 x 1.900	2	2⅛	500	2	5	3⅜	10⅛	3¾	⅝ x 4¼	100	130	7.2
150 x 40	*168.3 x 48.3*	*51*	*54*	*34.5*	*51*	*127*	*98*	*257*	*95*	*			*3.3*
6 x 2	6.625 x 2.375	2½	2⅝	500	2	5	3⅜	10⅛	4⅛	⅝ x 4¼	100	130	7.8
150 x 50	*168.3 x 60.3*	*64*	*67*	*34.5*	*51*	*127*	*98*	*257*	*105*	*			*3.5*
6 x 2½	6.625 x 2.875	2¾	2⅞	500	2	5⅛	3⅜	10⅛	4⅜	⅝ x 4¼	100	130	7.6
150 x 65	*168.3 x 73.0*	*70*	*73*	*34.5*	*51*	*130*	*98*	*257*	*111*	*			*3.4*
6 x 3 O.D.	*6.625 x 2.996*	*2¾*	*2⅞*	*500*	*2*	*5⅛*	*3⅜*	*10⅛*	*4⅜*	*⅝ x 4¼*	*100*	*130*	*7.6*
150 x 80	168.3 x 76.1	70	73	34.5	51	130	98	257	111	*			3.4
6 x 3	6.625 x 3.500	3½	3⅝	500	2	5⅛	3⅜	10⅛	5¼	⅝ x 4¼	100	130	8.0
150 x 80	*168.3 x 88.9*	*89*	*92*	*34.5*	*51*	*130*	*98*	*257*	*133*	*			*3.6*
6 x 4	6.625 x 4.500	4½	4⅝	500	2	5¼	3⅜	10⅛	6½	⅝ x 4¼	100	130	10.4
150 x 100	*168.3 x 114.3*	*114*	*117*	*34.5*	*51*	*133*	*98*	*257*	*165*	*			*4.7*
8 x 2	8.625 x 2.375	2½	2⅝	500	2¼	6⅛	5	12¾	4¼	¾ x 4½	130	180	10.4
200 x 50	*219.1 x 60.3*	*64*	*67*	*34.5*	*57*	*156*	*127*	*324*	*108*	-			*4.7*
8 x 2½	8.625 x 2.875	2¾	2⅞	500	2¼	6⅛	5	12¾	4⅜	¾ x 4½	130	180	10.6
200 x 65	*219.1 x 73.0*	*70*	*73*	*34.5*	*57*	*156*	*127*	*324*	*111*	*M20 x 110*	*175*	*245*	*4.8*
8 x 3	8.625 x 3.500	3½	3⅝	500	2¼	6⅛	5	12¾	5¼	¾ x 4½	130	180	11.5
200 x 80	*219.1 x 88.9*	*89*	*92*	*34.5*	*57*	*156*	*127*	*324*	*133*	*M20 x 110*	*175*	*245*	*5.2*
8 x 4	8.625 x 4.500	4½	4⅝	500	2¼	6¼	5	12¾	6½	¾ x 4½	130	180	16.2
200 x 100	*219.1 x 114.3*	*114*	*117*	*34.5*	*57*	*159*	*127*	*324*	*165*	*M20 x 110*	*175*	*245*	*7.3*

NOTES:
2½", 5" and 6" Nom. Run pipe size Clamp-T may be used on 3" O.D., 5½" O.D. and 6½" O.D. pipe.
• Cannot be used in cross configuration.

▼ Based on use with standard wall pipe.
§ – For additional Bolt Torque information, see page 222.
See Installation & Assembly directions on page 202.
Not for use with copper systems.

GRUVLOK FITTINGS FOR GROOVED-END PIPE

Gruvlok fittings are available through 24" nominal pipe size in a variety of styles. Use the Fitting Size Table to convert nominal pipe size to corresponding pipe O.D.

These fittings are designed to provide minimum pressure drop and uniform strength.

Depending on styles and size, Gruvlok fittings are provided in various materials including ductile iron, forged steel or fabricated steel.

Pressure ratings of Gruvlok standard fittings conform to those of Fig. 7001 Gruvlok coupling.

Not for use in copper systems.

NSF/ANSI 61 UPC

Galvanized Gruvlok Fittings are NSF-61 and Low Lead Approved

c UL us LISTED FM APPROVED

For Listings/Approval Details and Limitations, visit our website at www.anvilintl.com or contact an Anvil® Sales Representative.



FLOW DATA – FRICTIONAL RESISTANCE (EXPRESSED AS EQUIVALENT STRAIGHT PIPE)

Nom. Size	O.D.	Pipe Wall Thickness	Elbow		Tee	
			90°	45°	Branch	Run
In./DN(mm)	*In./mm*	*In./mm*	*Ft./m*	*Ft./m*	*Ft./m*	*Ft./m*
1 *25*	1.315 *33.4*	0.133 *3.4*	1.7 *0.5*	0.9 *0.3*	4.4 *1.3*	1.7 *0.5*
1¼ *32*	1.660 *42.2*	0.140 *3.6*	2.3 *0.7*	1.2 *0.4*	5.8 *1.8*	2.3 *0.7*
1½ *40*	1.900 *48.3*	0.145 *3.7*	2.7 *0.8*	1.3 *0.4*	6.7 *2.0*	2.7 *0.8*
2 *50*	2.375 *60.3*	0.154 *3.9*	3.4 *1.0*	1.7 *0.5*	8.6 *2.6*	3.4 *1.0*
2½ *65*	2.875 *73.0*	0.203 *5.2*	4.1 *1.2*	2.1 *0.6*	10.3 *3.1*	4.1 *1.2*
3 O.D. 76.1	*2.996* 76.1	*0.197* 5.0	*4.3* 1.3	*2.2* 0.7	*10.8* 3.3	*4.3* 1.3
3 *80*	3.500 *88.9*	0.216 *5.5*	5.1 *1.6*	2.6 *0.8*	12.8 *3.9*	5.1 *1.6*
4¼ O.D. 108.0	*4.250* 108.0	*0.220* 5.6	*6.4* 2.0	*3.2* 1.0	*16.1* 4.9	*6.4* 2.0
4 *100*	4.500 *114.3*	0.237 *6.0*	6.7 *2.0*	3.4 *1.0*	16.8 *5.1*	6.7 *2.0*
5¼ O.D. 133.0	*5.236* 133.0	*0.248* 6.3	*8.0* 2.4	*4.0* 1.2	*20.1* 6.1	*8.0* 2.4
5½ O.D. 139.7	*5.500* 139.7	*0.248* 6.3	*8.3* 2.5	*4.2* 1.3	*20.9* 6.4	*8.3* 2.5
5 *125*	5.563 *141.3*	0.258 *6.6*	8.4 *2.6*	4.2 *1.3*	21.0 *6.4*	8.4 *2.6*
6¼ O.D. 159.0	*6.259* 159.0	*0.280* 7.1	*9.7* 3.0	*4.9* 1.5	*24.3* 7.4	*9.7* 3.0
6½ O.D. 165.1	*6.500* 165.1	*0.280* 7.1	*10.0* 3.0	*5.0* 1.5	*24.9* 7.6	*10.0* 3.0
6 *150*	6.625 *168.3*	0.280 *7.1*	10.1 *3.1*	5.1 *1.6*	25.3 *7.7*	10.1 *3.1*
8 *200*	8.625 *219.1*	0.322 *8.2*	13.3 *4.1*	6.7 *2.0*	33.3 *10.1*	13.3 *4.1*
10 *250*	10.750 *273.1*	0.365 *9.3*	16.7 *5.1*	8.4 *2.6*	41.8 *12.7*	16.7 *5.1*
12 *300*	12.750 *323.9*	0.375 *9.5*	20.0 *6.1*	10.0 *3.0*	50.0 *15.2*	20.0 *6.1*
14 *350*	14.000 *355.6*	0.375 *9.5*	22.2 *6.8*	17.7 *5.4*	64.2 *19.6*	22.9 *7.0*
16 *400*	16.000 *406.4*	0.375 *9.5*	25.5 *7.8*	20.4 *6.2*	73.9 *22.5*	26.4 *8.0*
18 *450*	18.000 *457.2*	0.375 *9.5*	28.9 *8.8*	23.1 *7.0*	87.2 *26.6*	31.1 *9.5*
20 *500*	20.000 *508.0*	0.375 *9.5*	32.2 *9.8*	25.7 *7.8*	97.3 *29.7*	34.8 *10.6*
24 *600*	24.000 *609.6*	0.375 *9.5*	38.9 *11.9*	31.1 *9.5*	113.0 *34.4*	40.4 *12.3*

For the reducing tee and branches, use the value that is corresponding to the branch size. For example: for 6" x 6" x 3" tee, the branch value of 3" is 12.8 ft (3.9).

MATERIAL SPECIFICATIONS

CAST FITTINGS:

~~Ductile iron conforming to ASTM A 536, Grade 65-45-12~~

Malleable iron conforming to ASTM A 47

FABRICATED FITTINGS:

1-12" Carbon steel, Schedule 40, conforming to ASTM A 53, Grade B

14-24" Carbon steel, 0.375 wall, conforming to ASTM A 53, Grade B

COATINGS:

Rust inhibiting paint – Color: ORANGE (standard)

Hot Dipped Zinc Galvanized conforming to ASTM A 153 (optional)

Other Colors Available (IE: RAL3000 and RAL9000)

FITTING SIZE

Nominal Size	O.D.	Nominal Size	O.D.
In./DN(mm)	*In./mm*	*In./DN(mm)*	*In./mm*
1 *25*	1.315 *33.4*	5 *140*	5.563 *141.3*
1¼ *32*	1.660 *42.4*	*6¼ O.D.* 159.0	*6.259* 159.0
1½ *40*	1.900 *48.3*	*6½ O.D.* 165.1	*6.500* 165.1
2 *50*	2.375 *60.3*	6 *150*	6.625 *168.3*
2½ *65*	2.875 *73.0*	8 *200*	8.625 *219.1*
3 O.D. 76.1	*2.996* 76.1	10 *250*	10.750 *273.0*
3 *80*	3.500 *88.9*	12 *300*	12.750 *323.9*
3½ *90*	4.000 *101.6*	14 *350*	14.000 *355.6*
4¼ O.D. 108.0	*4.250* 108.0	16 *400*	16.000 *406.4*
4 *100*	4.500 *114.3*	18 *450*	18.000 *457.2*
5¼ O.D. 133.0	*5.236* 133.0	20 *500*	20.000 *508.0*
5½ O.D. 139.7	*5.500* 139.7	24 *600*	24.000 *609.6*

The Fitting Size Chart is used to determine the O.D. of the pipe that the fittings is to be used with. Gruvlok Fittings are identified by either the Nominal size in inches or the Pipe O.D. in/mm.

FIG. 7050

90° Elbow*

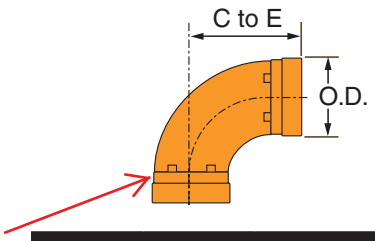

FIGURE 7050
90° ELBOW*

Nominal Size	O.D.	Center to End	Approx. Wt. Ea.
In./DN(mm)	*In./mm*	*In./mm*	*Lbs./Kg*
1 *25*	1.315 *33.4*	2¼ C *57*	0.6 *0.3*
1¼ *32*	1.660 *42.2*	2¾ C *70*	1.0 *0.5*
1½ *40*	1.900 *48.3*	2¾ C *70*	1.2 *0.5*
2 *50*	2.375 *60.3*	3¼ C *83*	1.7 *0.8*
2½ *65*	2.875 *73.0*	3¾ C *95*	2.6 *1.2*
3 O.D. 76.1	*2.996* 76.1	*4 C* 102	*3.6* 1.6
3 *80*	3.500 *88.9*	4¼ C *108*	4.0 *1.8*
3½ *90*	4.000 *101.6*	4½ C *114*	5.5 *2.5*
4¼ O.D. 108.0	*4.250* 108.0	*4¾ C* 121	*7.7* 3.5
4 *100*	4.500 *114.3*	5 C *127*	7.7 *3.5*
5¼ O.D. 133.0	*5.236* 133.0	*5¼ C* 133	*10.4* 4.7
5½ O.D. 139.7	*5.500* 139.7	*5¼ C* 133	*10.9* 4.9
5 *125*	5.563 *141.3*	5½ C *140*	11.1 *5.0*
6¼ O.D. 159.0	*6.259* 159.0	*6 C* 152	*15.2* 6.9
6½ O.D. 165.1	*6.500* 165.1	*6½ C* 165	*17.4* 7.9
6 *150*	6.625 *168.3*	6½ C *165*	16.5 *7.5*
8 *200*	8.625 *219.1*	7¾ C *197*	30.6 *13.9*
10 *250*	10.750 *273.1*	9 C *229*	53.5 *24.3*
12 *300*	12.750 *323.9*	10 C *254*	82 *37.2*
14* *350*	14.000 *355.6*	21 *533*	169.0 *76.7*
16* *400*	16.000 *406.4*	24 *610*	222.0 *100.7*
18* *450*	18.000 *457.2*	27 *686*	280.0 *127.0*
20* *500*	20.000 *508.0*	30 *762*	344.0 *156.0*
24* *600*	24.000 *609.6*	36 *914*	490.0 *222.3*

FIG. 7051

45° Elbow*

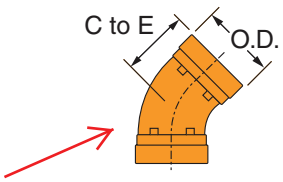

FIGURE 7051
45° ELBOW*

Nominal Size	O.D.	Center to End	Approx. Wt. Ea.
In./DN(mm)	*In./mm*	*In./mm*	*Lbs./Kg*
1 *25*	1.315 *33.4*	1¾ C *44*	0.5 *0.2*
1¼ *32*	1.660 *42.2*	1¾ C *44*	0.7 *0.3*
1½ *40*	1.900 *48.3*	1¾ C *44*	0.9 *0.4*
2 *50*	2.375 *60.3*	2 C *51*	1.5 *0.7*
2½ *65*	2.875 *73.0*	2¼ C *57*	1.9 *0.9*
3 O.D. 76.1	*2.996* 76.1	*2½ C* 64	*2.2* 1.0
3 *80*	3.500 *88.9*	2½ C *64*	3.3 *1.5*
3½ *90*	4.000 *101.6*	2¾ C *70*	4.3 *2.0*
4¼ O.D. 108.0	*4.250* 108.0	*2⅞ C* 83	*4.4* 2.0
4 *100*	4.500 *114.3*	3 C *76*	5.4 *2.4*
5¼ O.D. 133.0	*5.236* 133.0	*3¼ C* 83	*7.3* 3.3
5½ O.D. 139.7	*5.500* 139.7	*3¼ C* 83	*7.8* 3.5
5 *125*	5.563 *141.3*	3¼ C *83*	9.0 *4.1*
6¼ O.D. 159.0	*6.259* 159.0	*3½ C* 89	*10.1* 4.6
6½ O.D. 165.1	*6.500* 165.1	*3½ C* 89	*11.1* 5.0
6 *150*	6.625 *168.3*	3½ C *89*	11.2 *5.1*
8 *200*	8.625 *219.1*	4¼ C *108*	19.8 *9.0*
10 *250*	10.750 *273.1*	4¾ C *121*	34.3 *15.6*
12 *300*	12.750 *323.9*	5¼ C *133*	50.0 *22.7*
14* *350*	14.000 *355.6*	8¾ *222*	92.0 *41.7*
16* *400*	16.000 *406.4*	10 *254*	117.0 *53.1*
18* *450*	18.000 *457.2*	11¼ *286*	146.0 *66.2*
20* *500*	20.000 *508.0*	12½ *317*	179.0 *81.2*
24* *600*	24.000 *609.6*	15 *381*	255.0 *115.7*

FIG. 7052

22 ½° Elbow

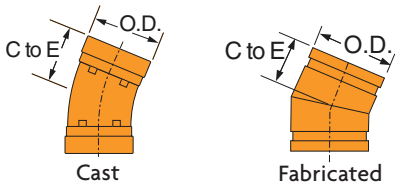

FIGURE 7052
22½° ELBOW*

Nominal Size	O.D.	Center to End	Approx. Wt. Ea.
In./DN(mm)	*In./mm*	*In./mm*	*Lbs./Kg*
1 *25*	1.315 *33.4*	3¼ *83*	0.5 *0.2*
1¼ *32*	1.660 *42.2*	1¾ *44*	0.7 *0.3*
1½ *40*	1.900 *48.3*	1¾ *44*	0.8 *0.4*
2 *50*	2.375 *60.3*	1⅞ C *48*	1.5 *0.7*
2½ *65*	2.875 *73.0*	2 *51*	1.9 *0.9*
3 *80*	3.500 *88.9*	2¼ C *57*	3.2 *1.5*
3½ *90*	4.000 *101.6*	2½ *64*	4.0 *1.8*
4 *100*	4.500 *114.3*	2⅝ C *67*	5.3 *2.4*
5 *125*	5.563 *141.3*	2⅞ *73*	7.2 *3.3*
6 *150*	6.625 *168.3*	3⅛ C *79*	8.2 *3.7*
8 *200*	8.625 *219.1*	3⅞ C *98*	17.8 *8.1*
10 *250*	10.750 *273.1*	4⅜ *111*	30.0 *13.6*
12 *300*	12.750 *323.9*	4⅞ *124*	40.4 *18.3*
14 *350*	14.000 *355.6*	5 *127*	46.0 *20.9*
16 *400*	16.000 *406.4*	5 *127*	52.2 *23.7*
18 *450*	18.000 *457.2*	5½ *140*	65.0 *29.5*
20 *500*	20.000 *508.0*	6 *152*	80.0 *36.3*
24 *600*	24.000 *609.6*	7 *178*	112.0 *50.8*

c UL us LISTED FM APPROVED

For Listings/Approval Details and Limitations, visit our website at www.anvilintl.com or contact an Anvil® Sales Representative.

C - Cast ductile iron, all others are fabricated steel.
* 14"-24" Standard Radius 90° & 45° Elbows are 1½ Long Radius.
Center to end dimensions and weights may differ from those shown in chart, contact an Anvil Representative for more information.

FIG. 7053

11 ¼° Elbow

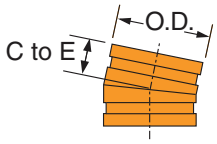

FIGURE 7053
11¼° ELBOW

Nominal Size	O.D.	Center to End	Approx. Wt. Ea.
In./DN(mm)	*In./mm*	*In./mm*	*Lbs./Kg*
1 *25*	1.315 *33.4*	1⅜ *35*	0.3 *0.1*
1¼ *32*	1.660 *42.2*	1⅜ *35*	0.5 *0.2*
1½ *40*	1.900 *48.3*	1⅜ *35*	0.7 *0.3*
2 *50*	2.375 *60.3*	1⅜ *35*	0.9 *0.4*
2½ *65*	2.875 *73.0*	1½ *38*	1.5 *0.7*
3 *80*	3.500 *88.9*	1½ *38*	2.0 *0.9*
3½ *90*	4.000 *101.6*	1¾ *44*	2.8 *1.3*
4 *100*	4.500 *114.3*	1¾ *44*	3.3 *1.5*
5 *125*	5.563 *141.3*	2 *51*	5.0 *2.3*
6 *150*	6.625 *168.3*	2 *51*	6.5 *2.9*
8 *200*	8.625 *219.1*	2 *51*	10.0 *4.5*
10 *250*	10.750 *273.1*	2⅛ *54*	14.5 *6.6*
12 *300*	12.750 *323.9*	2¼ *57*	18.7 *8.5*
14 *350*	14.000 *355.6*	3½ *89*	32.1 *14.6*
16 *400*	16.000 *406.4*	4 *102*	42.0 *19.1*
18 *450*	18.000 *457.2*	4½ *114*	53.2 *24.1*
20 *500*	20.000 *508.0*	5 *127*	65.7 *29.8*
24 *600*	24.000 *609.6*	6 *152*	96.0 *43.5*

FIG. 7050LR

90° Long Radius Elbow

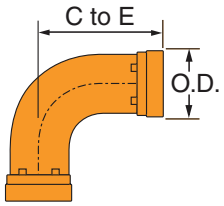

FIGURE 7050 LR
LONG RADIUS 90° ELBOW

Nominal Size	O.D.	Center to End	Approx. Wt. Ea.
In./DN(mm)	*In./mm*	*In./mm*	*Lbs./Kg*
1 *25*	1.315 *33.4*	3½ *89*	0.9 *0.4*
1¼ *32*	1.660 *42.2*	3⅞ *98*	1.3 *0.6*
1½ *40*	1.900 *48.3*	4¼ *108*	1.7 *0.8*
2 *50*	2.375 *60.3*	4⅜ *136*	2.5 *1.1*
2½ *65*	2.875 *73.0*	5¾ *146*	4.9 *2.2*
3 *80*	3.500 *88.9*	5⅞ *181*	6.5 *2.9*
3½ *90*	4.000 *101.6*	7¼ *184*	9.7 *4.4*
4 *100*	4.500 *114.3*	7½ *191*	11.5 *5.2*
5 *125*	5.563 *141.3*	9½ *241*	20.9 *9.5*
6 *150*	6.625 *168.3*	10¾ *273*	29.1 *13.2*
8 *200*	8.625 *219.1*	15 *381*	59.2 *26.9*
10 *250*	10.750 *273.1*	18 *457*	104.0 *47.2*
12 *300*	12.750 *323.9*	21 *533*	147.0 *66.7*
14 *350*	14.000 *355.6*	21 *533*	169.0 *76.7*
16 *400*	16.000 *406.4*	24 *610*	222.0 *100.7*
18 *450*	18.000 *457.2*	27 *686*	280.0 *127.0*
20 *500*	20.000 *508.0*	30 *762*	344.0 *156.0*
24 *600*	24.000 *609.6*	36 *914*	490.0 *222.3*

FIG. 7051LR

45° Long Radius Elbow

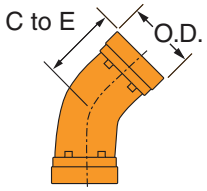

FIGURE 7051 LR
LONG RADIUS 45° ELBOW

Nominal Size	O.D.	Center to End	Approx. Wt. Ea.
In./DN(mm)	*In./mm*	*In./mm*	*Lbs./Kg*
1 *25*	1.315 *33.4*	2½ *64*	0.7 *0.3*
1¼ *32*	1.660 *42.2*	2½ *64*	1.0 *0.5*
1½ *40*	1.900 *48.3*	2½ *64*	1.2 *0.5*
2 *50*	2.375 *60.3*	2¾ *70*	1.7 *0.8*
2½ *65*	2.875 *73.0*	3 *76*	2.9 *1.3*
3 *80*	3.500 *88.9*	3⅜ *86*	4.3 *2.0*
3½ *90*	4.000 *101.6*	3½ *89*	5.3 *2.4*
4 *100*	4.500 *114.3*	4 *102*	7.2 *3.3*
5 *125*	5.563 *141.3*	5 *127*	12.2 *5.5*
6 *150*	6.625 *168.3*	5½ *140*	17.4 *7.9*
8 *200*	8.625 *219.1*	7¼ *184*	34.0 *15.4*
10 *250*	10.750 *273.1*	8½ *216*	57.4 *26.0*
12 *300*	12.750 *323.9*	10 *254*	82.6 *37.5*
14 *350*	14.000 *355.6*	8¾ *222*	92.0 *41.7*
16 *400*	16.000 *406.4*	10 *254*	117.0 *53.1*
18 *450*	18.000 *457.2*	11¼ *286*	146.0 *66.2*
20 *500*	20.000 *508.0*	12½ *317*	179.0 *81.2*
24 *600*	24.000 *609.6*	15 *381*	255.0 *115.7*

C - Cast ductile iron, all others are fabricated steel.
Center to end dimensions and weights may differ from those shown in chart, Contact an Anvil Representative for more information.

c UL us LISTED FM APPROVED

For Listings/Approval Details and Limitations, visit our website at www.anvilintl.com or contact an Anvil® Sales Representative.

FIG. 7060

Tee

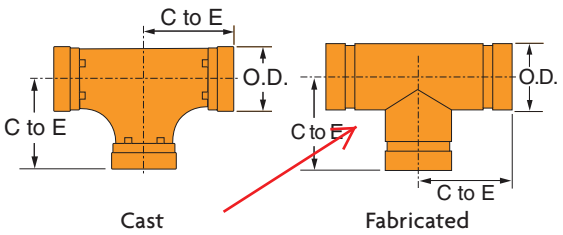

FIGURE 7060 TEE

Nominal Size	O.D.	Center to End	Approx. Wt. Ea.
In./DN(mm)	*In./mm*	*In./mm*	*Lbs./Kg*
1 *25*	1.315 *33.4*	2¼ C *57*	0.9 *0.4*
1¼ *32*	1.660 *42.2*	2¾ C *70*	1.5 *0.7*
1½ *40*	1.900 *48.3*	2¾ C *70*	1.8 *0.8*
2 *50*	2.375 *60.3*	3¼ C *83*	2.4 *1.1*
2½ *65*	2.875 *73.0*	3¾ C *95*	4.0 *1.8*
3 O.D. 76.1	*2.996* 76.1	*4 C* 101	*4.6* 2.1
3 *80*	3.500 *88.9*	4¼ C *108*	5.8 *2.6*
3½ *90*	4.000 *101.6*	4½ C *114*	9.8 *4.4*
4¼ O.D. 108.0	*4.250* 108.0	*4¾ C* 121	*9.3* 4.2
4 *100*	4.500 *114.3*	5 C *127*	10.3 *4.7*
5¼ O.D. 133.0	*5.236* 133.0	*5¼ C* 133	*14.1* 6.4
5½ O.D. 139.7	*5.500* 139.7	*5½ C* 140	*16.1* 7.3
5 *125*	5.563 *141.3*	5½ C *140*	16.2 *7.3*
6¼ O.D. 159.0	*6.259* 159.0	*6 C* 152	*20.8* 9.4
6½ O.D. 165.1	*6.500* 165.1	*6½ C* 165	*24.4* 11.1
6 *150*	6.625 *168.3*	6½ C *165*	25.7 *11.7*
8 *200*	8.625 *219.1*	7¾ C *197*	41.1 *18.6*
10 *250*	10.750 *273.1*	9 C *229*	74.5 *33.8*
12 *300*	12.750 *323.9*	10 C *254*	94.7 *43.0*
14 *350*	14.000 *355.6*	11 *279*	118.0 *53.5*
16 *400*	16.000 *406.4*	12 *305*	146.0 *66.2*
18 *450*	18.000 *457.2*	15½ *394*	218.0 *98.9*
20 *500*	20.000 *508.0*	17¼ *438*	275.0 *125*
24 *600*	24.000 *609.6*	20 *508*	379.0 *172*

C - Cast ductile iron, all others are fabricated steel.

c UL us LISTED FM APPROVED

For Listings/Approval Details and Limitations, visit our website at www.anvilintl.com or contact an Anvil® Sales Representative.

FIG. 7061

Reducing Tee Standard

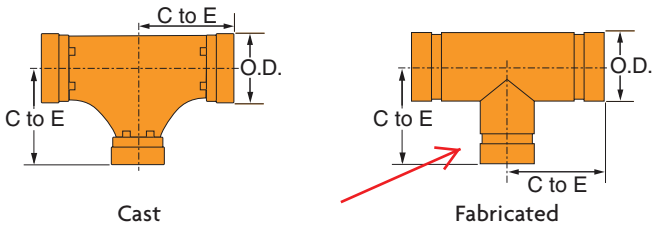

FIGURE 7061 STANDARD REDUCING TEE

Nominal Size	Center to End	Approx. Wt. Ea.	Nominal Size	Center to End	Approx. Wt. Ea.	Nominal Size	Center to End	Approx. Wt. Ea.
In./DN(mm)	*In./mm*	*Lbs./Kg*	*In./DN(mm)*	*In./mm*	*Lbs./Kg*	*In./DN(mm)*	*In./mm*	*Lbs./Kg*
1¼ x 1¼ x 1 *32 x 32 x 25*	2¾ *70*	1.5 *0.7*	5 x 5 x 2 *125 x 125 x 50*	5½ *140*	14 *6.4*	10 x 10 x 8 *250 x 250 x 200*	9 *229*	64.7 *29.3*
1½ x 1½ x 1 *40 x 40 x 25*	2¾ *70*	1.8 *0.8*	5 x 5 x 2½ *125 x 125 x 65*	5½ *140*	14.3 *6.5*	12 x 12 x 4 *300 x 300 x 100*	10 *254*	75.1 *34.1*
1½ x 1½ x 1¼ *40 x 40 x 32*	2¾ *70*	1.8 *0.8*	5 x 5 x 3 *125 x 125 x 80*	5½ *140*	14.6 *6.6*	12 x 12 x 5 *300 x 300 x 125*	10 *254*	75.6 *34.3*
2 x 2 x 1 *50 x 50 x 25*	3¼ C *83*	2.6 *1.2*	5 x 5 x 4 *125 x 125 x 100*	5½ C *140*	17.9 *8.1*	12 x 12 x 6 *300 x 300 x 150*	10 *254*	76.2 *34.6*
2 x 2 x 1¼ *50 x 50 x 32*	3¼ *83*	1.7 *0.8*	6 x 6 x 1 *150 x 150 x 25*	6½ *165*	20.5 *9.3*	12 x 12 x 8 *300 x 300 x 200*	10 *254*	76.3 *34.6*
2 x 2 x 1½ *50 x 50 x 40*	3¼ C *83*	2.7 *1.2*	6 x 6 x 1¼ *150 x 150 x 32*	6½ *165*	20.7 *9.4*	12 x 12 x 10 *300 x 300 x 250*	10 *254*	77.6 *35.2*
2½ x 2½ x 1 *65 x 65 x 25*	3¾ *95*	4.1 *1.9*	6 x 6 x 1½ *150 x 150 x 40*	6½ *165*	21.0 *9.5*	14 x 14 x 6 *350 x 350 x 150*	11 *279*	101 *45.8*
2½ x 2½ x 1¼ *65 x 65 x 32*	3¾ *95*	4.2 *1.9*	6 x 6 x 2 *150 x 150 x 50*	6½ C *165*	26.4 *12.0*	14 x 14 x 8 *350 x 350 x 200*	11 *279*	103 *46.7*
2½ x 2½ x 1½ *65 x 65 x 40*	3¾ *95*	4.3 *2.0*	6 x 6 x 2½ *150 x 150 x 65*	6½ C *165*	26.5 *12.0*	14 x 14 x 10 *350 x 350 x 250*	11 *279*	104 *47.2*
2½ x 2½ x 2 *65 x 65 x 50*	3¾ *95*	4.4 *2.0*	6 x 6 x 3 *150 x 150 x 80*	6½ C *165*	26.5 *12.0*	14 x 14 x 12 *350 x 350 x 300*	11 *279*	105 *47.6*
3 x 3 x 1 *80 x 80 x 25*	4¼ C *108*	7.0 *3.2*	6 x 6 x 4 *150 x 150 x 100*	6½ C *165*	26.5 *12.0*	16 x 16 x 10 *400 x 400 x 250*	12 *305*	129 *58.5*
3 x 3 x 1¼ *80 x 80 x 32*	4¼ *108*	5.8 *2.6*	6 x 6 x 5 *150 x 150 x 125*	6½ C *165*	28.0 *12.7*	16 x 16 x 12 *400 x 400 x 300*	12 *305*	130 *59.0*
3 x 3 x 1½ *80 x 80 x 40*	4¼ *108*	5.9 *2.7*	8 x 8 x 2 *200 x 200 x 50*	7¾ *197*	32.7 *14.8*	16 x 16 x 14 *400 x 400 x 350*	12 *305*	132 *59.9*
3 x 3 x 2 *80 x 80 x 50*	4¼ C *108*	5.5 *2.5*	8 x 8 x 2½ *200 x 200 x 65*	7¾ *197*	33.0 *15.0*	18 x 18 x 10 *450 x 450 x 250*	15½ *394*	194 *88.0*
3 x 3 x 2½ *80 x 80 x 65*	4¼ *108*	6.3 *2.9*	8 x 8 x 3 *200 x 200 x 80*	7¾ *197*	33.5 *15.2*	18 x 18 x 12 *450 x 450 x 300*	15½ *394*	196 *88.9*
4 x 4 x 1 *100 x 100 x 25*	3¾ *95*	7.0 *3.2*	8 x 8 x 4 *200 x 200 x 100*	7¾ C *197*	50.0 *22.7*	18 x 18 x 14 *450 x 450 x 350*	15½ *394*	201 *91.2*
4 x 4 x 1¼ *100 x 100 x 32*	5 *127*	9.6 *4.4*	8 x 8 x 5 *200 x 200 x 125*	7¾ *197*	34.7 *15.7*	18 x 18 x 16 *450 x 450 x 400*	15½ *394*	203 *92.1*
4 x 4 x 1½ *100 x 100 x 40*	5 *127*	10.2 *4.6*	8 x 8 x 6 *200 x 200 x 150*	7¾C *197*	54.0 *24.5*	20 x 20 x 12 *500 x 500 x 300*	17¼ *438*	246 *111.6*
4 x 4 x 2 *100 x 100 x 50*	5 C *127*	10.2 *4.6*	10 x 10 x 2 *250 x 250 x 50*	9 *229*	52.2 *23.7*	20 x 20 x 14 *500 x 500 x 350*	17¼ *438*	248 *112.5*
4 x 4 x 2½ *100 x 100 x 65*	5 C *127*	11.2 *5.1*	10 x 10 x 2½ *250 x 250 x 65*	9 *229*	52.6 *23.9*	20 x 20 x 16 *500 x 500 x 400*	17¼ *438*	250 *113.4*
4 x 4 x 3 *100 x 100 x 80*	5 C *127*	11.4 *5.2*	10 x 10 x 3 *250 x 250 x 80*	9 *229*	53.0 *24.0*	20 x 20 x 18 *500 x 500 x 450*	17¼ *438*	252 *114.3*
5 x 5 x 1 *125 x 125 x 25*	5½ *140*	13.6 *6.2*	10 x 10 x 4 *250 x 250 x 100*	9 *229*	53.6 *24.3*	24 x 24 x 16 *600 x 600 x 400*	20 *508*	342 *155.1*
5 x 5 x 1¼ *125 x 125 x 32*	5½ *140*	13.7 *6.2*	10 x 10 x 5 *250 x 250 x 125*	9 *229*	54.2 *24.6*	24 x 24 x 18 *600 x 600 x 450*	20 *508*	345 *156.5*
5 x 5 x 1½ *125 x 125 x 40*	5½ *140*	13.8 *6.3*	10 x 10 x 6 *250 x 250 x 150*	9 *229*	55.0 *24.9*	24 x 24 x 20 *600 x 600 x 500*	20 *508*	347 *157.4*

Center to end dimensions and weights may differ from those shown in chart, contact an Anvil Representative for more information.

See Fitting Size chart on page 61 for O.D.

FIG. 7063

Tee w/ Threaded Branch

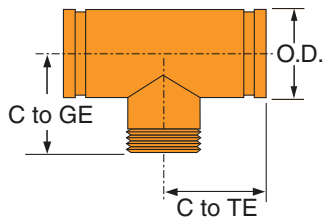

FIGURE 7063
TEE WITH THREADED BRANCH

Nominal Size	O.D.	C to GE	C to TE	Approx. Wt. Ea.
In./DN(mm)	In./mm	In./mm	In./mm	Lbs./Kg
1 25	1.315 33.4	2¼ 57	2¼ 57	0.9 0.4
1¼ 32	1.660 42.2	2¾ 70	2¾ 70	1.4 0.6
1½ 40	1.900 48.3	2¾ 70	2¾ 70	1.7 0.8
2 50	2.375 60.3	3¼ 83	4¼ 108	2.9 1.3
2½ 65	2.875 73.0	3¾ 95	3¾ 95	4.7 2.1
3 80	3.500 88.9	4¼ 108	6 152	8.1 3.7
4 100	4.500 114.3	5 127	7¼ 184	13.5 6.1
5 125	5.563 140	5½ 140	5½ 140	16.7 7.6
6 150	6.625 168.3	6½ 165	6½ 165	25.6 11.6
8 200	8.625 219.1	7¾ 197	7¾ 197	45.0 20.4
10 250	10.750 273.1	9 229	9 229	73.0 33.1
12 300	12.750 323.9	10 254	10 254	98.0 44.5

c UL us LISTED FM APPROVED

For Listings/Approval Details and Limitations, visit our website at www.anvilintl.com or contact an Anvil® Sales Representative.

FIG. 7064

Reducing Tee w/ Threaded Branch

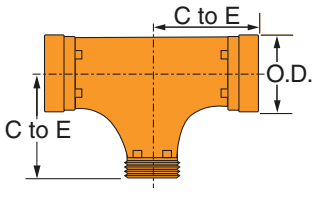

Cast

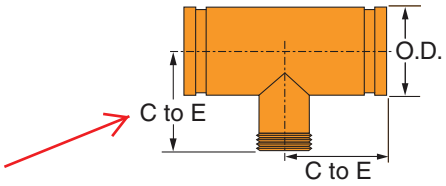

Fabricated

FIGURE 7064 REDUCING TEE WITH THREADED BRANCH

Nominal Size	Center to End	Approx. Wt. Ea.	Nominal Size	Center to End	Approx. Wt. Ea.	Nominal Size	Center to End	Approx. Wt. Ea.
In./DN(mm)	In./mm	Lbs/Kg	In./DN(mm)	In./mm	Lbs/Kg	In./DN(mm)	In./mm	Lbs/Kg
2 x 2 x ¾ 50 x 50 x 20	3¼ 83	1.6 0.7	5 x 5 x 2 125 x 125 x 50	5½ 140	14.5 6.6	12 x 12 x 3 300 x 300 x 80	10 254	84.9 38.5
2 x 2 x 1 50 x 50 x 25	3¼ C 83	2.6 1.2	5 x 5 x 2½ 125 x 125 x 65	5½ 140	17.5 7.9	12 x 12 x 4 300 x 300 x 100	10 254	85.8 38.9
2 x 2 x 1¼ 50 x 50 x 32	3¼ 83	1.7 0.8	5 x 5 x 3 125 x 125 x 80	5½ 140	16.1 7.3	12 x 12 x 5 300 x 300 x 125	10 254	87.0 39.5
2 x 2 x 1½ 50 x 50 x 40	3¼ C 83	2.7 1.2	5 x 5 x 4 125 x 125 x 100	5½ 140	17.9 8.1	12 x 12 x 6 300 x 300 x 150	10 254	88.3 40.1
2½ x 2½ x 1 65 x 65 x 25	3¾ 95	4.1 1.9	6 x 6 x 2 150 x 150 x 50	6½ 165	26.4 12.0	12 x 12 x 8 300 x 300 x 200	10 254	91.2 41.4
2½ x 2½ x 1¼ 65 x 65 x 32	3¾ 95	4.2 1.9	6 x 6 x 2½ 150 x 150 x 65	6½ 165	26.5 12.0	12 x 12 x 10 300 x 300 x 250	10 254	94.8 43.0
2½ x 2½ x 1½ 65 x 65 x 40	3¾ 95	4.3 2.0	6 x 6 x 3 150 x 150 x 80	6½ 165	26.5 12.0	14 x 14 x 8 350 x 350 x 200	11 279	110.0 49.7
2½ x 2½ x 2 65 x 65 x 50	3¾ 95	4.4 2.0	6 x 6 x 4 150 x 150 x 100	6½ 165	26.5 12.0	14 x 14 x 10 350 x 350 x 250	11 279	114.0 51.5
3 x 3 x ¾ 80 x 80 x 20	4¼ 108	5.7 2.6	6 x 6 x 5 150 x 150 x 125	6½ 165	28.0 12.7	14 x 14 x 12 350 x 350 x 300	11 279	117.0 52.8
3 x 3 x 1 80 x 80 x 25	4¼ C 108	7.0 3.2	8 x 8 x 2 200 x 200 x 50	7¾ 197	37.5 17.0	16 x 16 x 8 400 x 400 x 200	12 305	135.0 61.2
3 x 3 x 1¼ 80 x 80 x 32	4¼ 108	5.2 2.4	8 x 8 x 2½ 200 x 200 x 65	7¾ 197	38.0 17.2	16 x 16 x 10 400 x 400 x 250	12 305	139.0 63.0
3 x 3 x 1½ 80 x 80 x 40	4¼ 108	5.3 2.4	8 x 8 x 3 200 x 200 x 80	7¾ 197	38.7 17.6	16 x 16 x 12 400 x 400 x 300	12 305	142.0 64.4
3 x 3 x 2 80 x 80 x 50	4¼ 108	5.5 2.5	8 x 8 x 4 200 x 200 x 100	7¾ 197	50.0 22.7	18 x 18 x 10 450 x 450 x 250	15½ 394	204.0 92.5
3 x 3 x 2½ 80 x 80 x 65	4¼ 108	5.8 2.6	8 x 8 x 5 200 x 200 x 125	7¾ 197	41.0 18.6	18 x 18 x 12 450 x 450 x 300	15½ 394	209.0 94.8
4 x 4 x ¾ 100 x 100 x 20	3¾ 95	7.2 3.3	8 x 8 x 6 200 x 200 x 150	7¾ 197	54.0 24.5	18 x 18 x 14 450 x 450 x 350	15½ 0	211.0 95.7
4 x 4 x 1 100 x 100 x 25	3¾ 95	7.0 3.2	10 x 10 x 2 250 x 250 x 50	9 229	61.8 28.0	18 x 18 x 16 450 x 450 x 400	15½ 0	216.0 98.0
4 x 4 x 1¼ 100 x 100 x 32	5 127	9.1 4.1	10 x 10 x 3 250 x 250 x 80	9 229	63.0 28.6	24 x 24 x 8 600 x 600 x 200	20 508	334.0 152
4 x 4 x 1½ 100 x 100 x 40	5 127	9.2 4.2	10 x 10 x 4 250 x 250 x 100	9 229	64.0 29.0	24 x 24 x 10 600 x 600 x 250	20 508	342.0 155
4 x 4 x 2 100 x 100 x 50	5 127	10.2 4.6	10 x 10 x 5 250 x 250 x 125	9 229	65.1 29.5	24 x 24 x 12 600 x 600 x 300	20 508	349.0 158
4 x 4 x 2½ 100 x 100 x 65	5 127	11.2 5.1	10 x 10 x 6 250 x 250 x 150	9 229	55.0 24.9			
4 x 4 x 3 100 x 100 x 80	5 127	11.4 5.2	10 x 10 x 8 250 x 250 x 200	9 229	64.7 29.3			

C - Cast ductile iron, all others are fabricated steel.

See Fitting Size chart on page 61 for O.D.

FIG. 7076

Gr x Thd Concentric Reducers

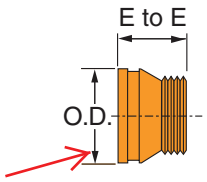

FIGURE 7076 – CONCENTRIC REDUCER GROOVE BY THREAD

Nominal Size	End to End	Approx. Wt. Ea.
In./DN(mm)	*In./mm*	*Lbs./Kg*
1½ x 1 *40 x 25*	2½ *6 4*	0.6 *0.3*
2 x ¾ *50 x 80*	2½ *64*	1.0 *0.5*
2 x 1 *50 x 25*	2½ *64*	0.8 *0.4*
2 x 1¼ *50 x 32*	2½ *64*	1.3 *0.6*
2 x 1½ *50 x 40*	2½ *64*	1.3 *0.6*
2½ x 1 *65 x 25*	2½ *64*	1.0 *0.5*
2½ x 1¼ *65 x 32*	2½ *64*	1.0 *0.5*
2½ x 1½ *65 x 40*	2½ *64*	1.3 *0.6*
2½ x 2 *65 x 50*	2½ *64*	1.2 *0.5*
3 x ¾ *80 x 80*	2½ *64*	1.2 *0.5*
3 x 1 *80 x 25*	2½ *64*	1.2 *0.5*
3 x 1¼ *80 x 32*	2½ *64*	1.3 *0.6*
3 x 1½ *80 x 40*	2½ *64*	1.3 *0.6*
3 x 2 *80 x 50*	2½ *64*	1.3 *0.6*
3 x 2½ *80 x 65*	2½ *64*	1.5 *0.7*
4 x 1 *100 x 25*	3 *76*	2.2 *1.0*
4 x 1¼ *100 x 32*	3 *76*	2.3 *1.0*
4 x 1½ *100 x 40*	3 *76*	2.3 *1.0*
4 x 2 *100 x 50*	3 *76*	2.3 *1.0*
4 x 2½ *100 x 65*	3 *76*	2.3 *1.0*
4 x 3 *100 x 80*	3 *76*	2.6 *1.2*
5 x 4 *125 x 100*	3½ *89*	4.5 *2.0*
6 x 1 *150 x 25*	4 *102*	6.0 *2.7*
6 x 1¼ *150 x 32*	4 *102*	6.0 *2.7*
6 x 1½ *150 x 40*	4 *102*	6.0 *2.7*
6 x 2 *150 x 50*	4 *102*	6.0 *2.7*
6 x 3 *150 x 80*	4 *102*	6.0 *2.7*
6 x 4 *150 x 100*	4 *102*	5.9 *2.7*

All are Fabricated Steel.
See Fitting Size chart on page 61 for O.D.

FIG. 7073 & FIG. 7097

Eccentric Reducers

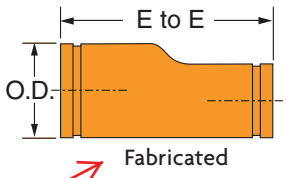

Fig. 7073– Gr. x Gr.

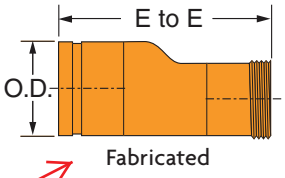

Fig. 7097 – Gr. x Thd.

FIGURE 7073 & 7097 ECCENTRIC REDUCER

Nominal Size	End to End	Approx. Wt. Ea.
In./DN(mm)	*In./mm*	*Lbs./Kg*
1¼ x 1 *32 x 25*	8½ *216*	1.5 *0.7*
1½ x ¾ *40 x 20*	8½ *216*	1.6 *0.7*
1½ x 1 *40 x 25*	8½ *216*	1.7 *0.8*
1½ x 1¼ *40 x 32*	8½ *216*	4.5 *2.0*
2 x ¾ *50 x 80*	9 *229*	2.1 *1.0*
2 x 1 *50 x 25*	9 *229*	2.2 *1.0*
2 x 1¼ *50 x 32*	9 *229*	2.4 *1.1*
2 x 1½ *50 x 40*	9 *229*	2.5 *1.1*
2½ x 1 *65 x 25*	9½ *241*	3.2 *1.5*
2½ x 1¼ *65 x 32*	9½ *241*	3.4 *1.5*
2½ x 1½ *65 x 40*	9½ *241*	3.6 *1.6*
2½ x 2 *65 x 50*	9½ *241*	4.0 *1.8*
3 x 1 *80 x 25*	9½ *241*	4.0 *1.8*
3 x 1¼ *80 x 32*	9½ *241*	4.3 *2.0*
3 x 1½ *80 x 40*	9½ *241*	4.5 *2.0*
3 x 2 *80 x 50*	9½ *241*	4.8 *2.2*
3 x 2½ *80 x 65*	9½ *241*	5.6 *2.5*
3½ x 3 *90 x 80*	9½ *241*	6.6 *3.0*
4 x 1 *100 x 25*	10 *254*	5.9 *2.7*
4 x 1½ *100 x 40*	10 *254*	6.4 *2.9*
4 x 2 *100 x 50*	10 *254*	6.7 *3.0*
4 x 2½ *100 x 65*	10 *254*	7.3 *3.3*
4 x 3 *100 x 80*	10 *254*	7.9 *3.6*
5 x 2 *125 x 50*	11 *279*	9.3 *4.2*
5 x 2½ *125 x 65*	11 *279*	9.9 *4.5*
5 x 3 *125 x 80*	11 *279*	10.7 *4.9*
5 x 4 *125 x 100*	11 *279*	11.9 *5.4*
6 x 1 *150 x 25*	11½ *292*	12.0 *5.4*
6 x 1½ *150 x 40*	11½ *292*	12.1 *5.5*
6 x 2 *150 x 50*	11½ *292*	12.2 *5.5*
6 x 2½ *150 x 65*	11½ *292*	12.8 *5.8*
6 x 3 *150 x 80*	11½ *292*	13.6 *6.2*
6 x 4 *150 x 100*	11½ *292*	14.9 *6.8*
6 x 5 *150 x 125*	11½ *292*	16.2 *7.3*
8 x 3 *200 x 80*	12 *305*	17.9 *8.1*
8 x 4 *200 x 100*	12 *305*	19.7 *8.9*
8 x 5 *200 x 125*	12 *305*	21.4 *9.7*
8 x 6 *200 x 150*	12 *305*	23.2 *10.5*
10 x 4 *250 x 100*	13 *330*	29.7 *13.5*
10 x 5 *250 x 125*	13 *330*	31.7 *14.4*
10 x 6 *250 x 150*	13 *330*	34.0 *15.4*
10 x 8 *250 x 200*	13 *330*	34.4 *15.6*
12 x 6 *300 x 150*	14 *356*	45.2 *20.5*
12 x 8 *300 x 200*	14 *356*	47.7 *21.6*
12 x 10 *300 x 250*	14 *356*	52.0 *23.6*
14 x 6 *350 x 150*	13 *330*	78 *35.4*
14 x 8 *350 x 200*	13 *330*	80 *36.3*
14 x 10 *350 x 250*	13 *330*	84 *38.1*
14 x 12 *350 x 300*	13 *330*	88 *39.9*
16 x 8 *400 x 200*	14 *356*	91 *41.3*
16 x 10 *400 x 250*	14 *356*	96 *43.5*
16 x 12 *400 x 300*	14 *356*	99 *44.9*
16 x 14 *400 x 350*	14 *356*	104 *47.2*
18 x 10 *450 x 250*	15 *381*	110 *49.9*
18 x 12 *450 x 300*	15 *381*	113 *51.3*
18 x 14 *450 x 350*	15 *381*	117 *53.1*
18 x 16 *450 x 400*	15 *381*	121 *54.9*
20 x 10 *500 x 250*	20 *508*	145 *65.8*
20 x 12 *500 x 300*	20 *508*	149 *67.6*
20 x 14 *500 x 350*	20 *508*	152 *68.9*
20 x 16 *500 x 400*	20 *508*	156 *70.8*
20 x 18 *500 x 450*	20 *508*	160 *72.6*
24 x 12 *600 x 300*	20 *508*	179 *81.2*
24 x 14 *600 x 350*	20 *508*	184 *83.5*
24 x 16 *600 x 400*	20 *508*	189 *85.7*
24 x 18 *600 x 450*	20 *508*	194 *88*
24 x 20 *600 x 500*	20 *508*	199 *90.3*

Fabricated Steel *Figure 7097 is available in sizes 1¼ x 1 through 12 x 10.
Center to end dimensions may differ from those shown above. Contact an Anvil Representative for more information.
See Fitting Size chart on page 61 for O.D.

c UL us LISTED FM APPROVED

For Listings/Approval Details and Limitations, visit our website at www.anvilintl.com or contact an Anvil® Sales Representative.

FIG. 7077, FIG. 7078 & FIG. 7079

Swaged Nipples

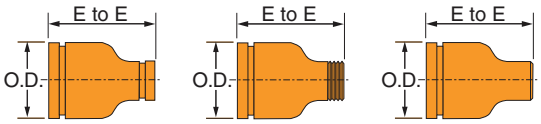

Fig. 7077 Gr x Gr

Fig. 7078 Gr x Thd

Fig. 7079 Gr x Bev

FIGURE 7077, 7078 & 7079 SWAGED NIPPLES

Nominal Size	End to End	Approx. Wt. Ea.	Nominal Size	End to End	Approx. Wt. Ea.
In./DN(mm)	*In./mm*	*Lbs./Kg*	*In./DN(mm)*	*In./mm*	*Lbs./Kg*
2 x 1 *50 x 25*	6½ C *165*	2.0 *0.9*	4 x 2½ *100 x 65*	9 *229*	8.0 *3.6*
2 x 1¼ *50 x 32*	6½ *165*	2.0 *0.9*	4 x 3 *100 x 80*	9 *229*	8.0 *3.6*
2 x 1½ *50 x 40*	6½ *165*	2.0 *0.9*	4 x 3½ *100 x 90*	9 *229*	8.0 *3.6*
2½ x 1 *65 x 25*	7 *178*	3.5 *1.6*	5 x 2 *125 x 50*	11 *279*	12.0 *5.4*
2½ x 1¼ *65 x 32*	7 *178*	3.5 *1.6*	5 x 2½ *125 x 65*	11 *279*	12.0 *5.4*
2½ x 1½ *65 x 40*	7 *178*	3.5 *1.6*	5 x 3 *125 x 80*	11 *279*	12.0 *5.4*
2½ x 2 *65 x 50*	7 *178*	3.5 *1.6*	5 x 4 *125 x 100*	11 *279*	12.0 *5.4*
3 x 1 *80 x 25*	8 *203*	5.0 *2.3*	6 x 1 *150 x 25*	12 *305*	19.0 *8.6*
3 x 1¼ *80 x 32*	8 *203*	5.0 *2.3*	6 x 1¼ *150 x 32*	12 *305*	19.0 *8.6*
3 x 1½ *80 x 40*	8 *203*	5.0 *2.3*	6 x 1½ *150 x 40*	12 *305*	19.0 *8.6*
3 x 2 *80 x 50*	8 *203*	5.0 *2.3*	6 x 2 *150 x 50*	12 *305*	19.0 *8.6*
3 x 2½ *80 x 65*	8 *203*	5.0 *2.3*	6 x 2½ *150 x 65*	12 *305*	19.0 *8.6*
3½ x 3 *90 x 80*	8 *203*	7.0 *3.2*	6 x 3 *150 x 80*	12 *305*	19.0 *8.6*
4 x 1 *100 x 25*	9 *229*	8.0 *3.6*	6 x 3½ *150 x 90*	12 *305*	17.0 *7.7*
4 x 1¼ *100 x 32*	9 *229*	8.0 *3.6*	6 x 4 *150 x 100*	12 *305*	19.0 *8.6*
4 x 1½ *100 x 40*	9 *229*	8.0 *3.6*	6 x 5 *150 x 125*	12 *305*	19.0 *8.6*
4 x 2 *100 x 50*	9 *229*	8.0 *3.6*			

This product is not ULC Listed.
See Fitting Size chart on page 61 for O.D.

UL LISTED FM APPROVED

For Listings/Approval Details and Limitations, visit our website at www.anvilintl.com or contact an Anvil® Sales Representative.

FIG. 7072

Gr x Gr Concentric Reducer

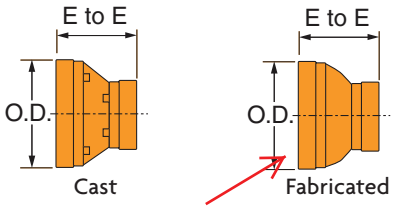

Cast

Fabricated

FIGURE 7072 CONCENTRIC REDUCER

Nominal Size	End to End	Approx. Wt. Ea.	Nominal Size	End to End	Approx. Wt. Ea.	Nominal Size	End to End	Approx. Wt. Ea.
In./DN(mm)	*In./mm*	*Lbs/Kg*	*In./DN(mm)*	*In./mm*	*Lbs/Kg*	*In./DN(mm)*	*In./mm*	*Lbs/Kg*
1¼ x 1 *32 x 25*	2½ *64*	0.6 *0.3*	5 x 2 *125 x 50*	3½ *89*	4.6 *2.1*	14 x 6 *350 x 150*	13 *330*	54.3 *24.6*
1½ x 1 *40 x 25*	2½ *64*	0.6 *0.3*	5 x 2½ *125 x 65*	3½ *89*	4.5 *2.0*	14 x 8 *350 x 200*	13 *330*	54.5 *24.7*
1½ x 1¼ *40 x 32*	2½ *64*	0.6 *0.3*	5 x 3 *125 x 80*	3½ *89*	4.4 *2.0*	14 x 10 *350 x 250*	13 *330*	55.7 *25.3*
2 x 1 *50 x 25*	2½ *64*	0.8 *0.4*	5 x 4 *125 x 100*	3½ C *89*	4.5 *2.0*	14 x 12 *350 x 300*	13 *330*	57.3 *26.0*
2 x 1¼ *50 x 32*	2½ C *64*	1.3 *0.6*	6 x 1 *150 x 25*	4 *102*	6.8 *3.1*	16 x 8 *400 x 200*	14 *356*	65.4 *29.7*
2 x 1½ *50 x 40*	2½ C *64*	1.3 *0.6*	6 x 1½ *150 x 40*	4 *102*	6.9 *3.1*	16 x 10 *400 x 250*	14 *356*	66.7 *30.3*
2½ x 1 *65 x 25*	2½ *64*	1.0 *0.5*	6 x 2 *150 x 50*	4 C *102*	6.0 *2.7*	16 x 12 *400 x 300*	14 *356*	68.1 *30.9*
2½ x 1¼ *65 x 32*	2½ *64*	1.0 *0.5*	6 x 2½ *150 x 65*	4 *102*	6.0 *2.7*	16 x 14 *400 x 350*	14 *356*	71.0 *32.2*
2½ x 1½ *65 x 40*	2½ *64*	1.3 *0.6*	6 x 3 *150 x 80*	4 C *102*	5.4 *2.4*	18 x 10 *450 x 250*	15 *381*	82.3 *37.3*
2½ x 2 *65 x 50*	2½ C *64*	1.6 *0.7*	6 x 4 *150 x 100*	4 C *102*	5.6 *2.5*	18 x 12 *450 x 300*	15 *381*	83.6 *37.9*
3 x 1 *80 x 25*	2½ *64*	1.2 *0.5*	6 x 5 *150 x 125*	4 C *102*	6.0 *2.7*	18 x 14 *450 x 350*	15 *381*	86.2 *39.1*
3 x 1¼ *80 x 32*	2½ *64*	1.3 *0.6*	8 x 3 *200 x 80*	5 *127*	12.0 *5.5*	18 x 16 *450 x 400*	15 *381*	87.2 *39.6*
3 x 1½ *80 x 40*	2½ *64*	1.3 *0.6*	8 x 4 *200 x 100*	5 C *127*	9.0 *4.1*	20 x 10 *500 x 250*	20 *508*	123.0 *55.8*
3 x 2 *80 x 50*	2½ C *64*	1.4 *0.6*	8 x 5 *200 x 125*	5 *127*	11.5 *5.2*	20 x 12 *500 x 300*	20 *508*	125.0 *56.7*
3 x 2½ *80 x 65*	2½ C *64*	1.5 *0.7*	8 x 6 *200 x 150*	5 C *127*	10.6 *4.8*	20 x 14 *500 x 350*	20 *508*	129.0 *58.5*
3½ x 3 *90 x 80*	3 *76*	1.8 *0.8*	10 x 4 *250 x 100*	6 *152*	20 *9.1*	20 x 16 *500 x 400*	20 *508*	131.0 *59.4*
4 x 1 *100 x 25*	3 *76*	2.2 *1.0*	10 x 5 *250 x 125*	6 *152*	20 *9.1*	20 x 18 *500 x 450*	20 *508*	133.0 *60.3*
4 x 1¼ *100 x 32*	3 *76*	2.2 *1.0*	10 x 6 *250 x 150*	6 C *152*	20 *9.1*	24 x 10 *600 x 250*	20 *508*	147.0 *66.7*
4 x 1½ *100 x 40*	3 *76*	2.3 *1.0*	10 x 8 *250 x 200*	6 *152*	23.9 *10.8*	24 x 12 *600 x 300*	20 *508*	149.0 *67.6*
4 x 2 *100 x 50*	3 C *76*	2.4 *1.1*	12 x 4 *300 x 100*	7 *178*	25 *11.3*	24 x 14 *600 x 350*	20 *508*	152.0 *68.9*
4 x 2½ *100 x 65*	3 C *76*	2.6 *1.2*	12 x 6 *300 x 150*	7 *178*	29 *13.2*	24 x 16 *600 x 400*	20 *508*	153.0 *69.4*
4 x 3 *100 x 80*	3 C *76*	3.2 *1.5*	12 x 8 *300 x 200*	7 *178*	29 *13.2*	24 x 18 *600 x 450*	20 *508*	154.0 *69.9*
4 x 3½ *100 x 90*	3 *76*	3.6 *1.6*	12 x 10 *300 x 250*	7 *178*	32.4 *14.7*	24 x 20 *600 x 500*	20 *508*	155.0 *70.3*

C - Cast ductile iron, all others are fabricated steel.

c UL US LISTED FM APPROVED

For Listings/Approval Details and Limitations, visit our website at www.anvilintl.com or contact an Anvil® Sales Representative.

Mécanique Nordique
Plumbing
Heating
Ventillation
mecanique.nordique@hotmail.com

1255 Rue J.A.Bombardier
Lévis, Québec
G7A 2P4
Téléphone: 418-496-1109
Télécopieur: 418-496-3803

REVIEWED BY CONTRACTOR
Kudlik Construction Ltd.
NAME: Sandra Rousseau P.Eng
DATE: Jul 23, 2018

IQALUIT WWTP UPGRADE

DRAWING FOR APPROVAL

Ingineer : NUNAMI STANTEC

DRAWING #: AD-031

Section 23 31 14
Article 2.1 2.2 2.3
Plans
Application : Duct Sealant and Fiberglass tape
Brand : TCE
Model : MULTI- PURPOSE
Revised # :
Supplyer : Emco

Pages incl. 6
Date : **2018-07-23**
By : **Mécanique Nordique Inc.**

STANTEC PROJECT #: 110126045
SUBMITTAL # AD-031

This review by Stantec is for general conformance with the design concept of Stantec's design of the:
☐ Architectural ☐ Electrical
☐ Structural ☐ Other
☑ Mechanical

component(s) only and does not mean that Stantec has verified or approves the shop drawing(s). The Contractor remains solely responsible for the shop drawing(s) and this review by Stantec does not relieve the Contractor of the Contractor's responsibility for errors or omissions in the shop drawing(s) or for meeting all requirements of the contract documents. This review does not mean that Stantec approves the detailed design inherent in the shop drawing, responsibility for which shall remain with the Contractor submitting same, nor does this review mean that Stantec accepts any deviation of the shop drawing(s) from the contract documents. The Contractor is responsible for confirming all dimensions and correlating them at the job site, for all construction means, methods and techniques, and for coordination of construction work of all trades, including coordination of all shop drawings.

Stantec

☑ REVIEWED
☐ REVIEWED, AS NOTED
☐ REVISE AND RESUBMIT
☐ NOT REVIEWED

DATE 2018-07-26
BY Brendan Zrum, P.Eng

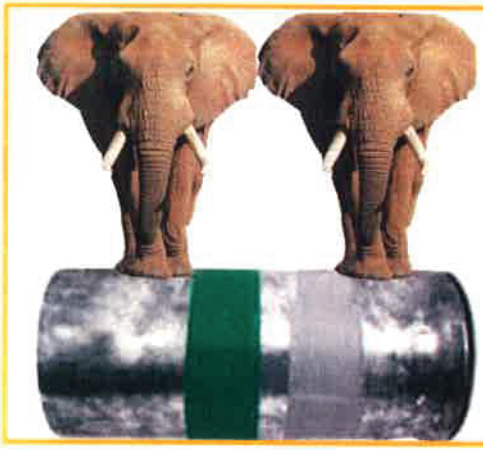

MULTI-PURPOSE

MP MULTI-PURPOSE

FOR SEALING JOINTS AND SEAMS OF HEATING & VENTILATION DUCTWORK

MULTI-PURPOSE SEALANT
"One Sealant does it all."

EXCLUSIVE FEATURES

FLEXIBLE

NON TOXIC

FLAME RESISTANT

DEPENDABILITY

FIREPROOF

ULC S-102 LISTED
FILE CR 1207

SMOKE PROOF

BELOW FREEZING APPLICATION

EACH GALLON BEARS A U.L.C. LABEL

- Will always remain flexible - 600% Elongation Cured Film.
- Will resist up to 25" Static Pressure.
- Will adhere to most dirty surfaces without conventional cleaning measures.
- No dangerous smell causing -
  Oxygen starvation
  Increased pulsation
  Eliminates headaches
- Will not flash or burn in the wet or dry state.
- Does not require special storage
- Special precautions not necessary. No fear of explosions.
- You have now solved your sealing problems with Multi-Purpose - economically and certain of no leaks.

DISTRIBUTED BY:

TCE **Trans Continental Equipment Ltd** Since 1952 info@tce.ca www.tce.ca
1025 Butler street, Montreal, Qc, Canada H3K 3E9 Tel.: 514 937-9145 **Toll Free: 800 825-9145** Fax: 514 937-3196
240 Cordova Road, Oshawa, On, Canada L1J 1N9 Tel.: 905 579-0878 **Toll Free: 800 314-9845** Fax: 905 579-2589
technical.qxp:mp_special_01 06/2008

PG 53 of 55
JUL 01 2010

MULTI-PURPOSE®

FLAME RESISTANT DUCT SEALANT

For High, Medium, or Low Velocity Connections

Technical Data And Characteristics

Solid Content: 55%
Viscosity: 1,000,000 cps
Storage life: 1 years
Flexibility: excellent
Cured film: 600% elongation
Application temperature: 5°C to 28°C / 40°F to 82°F
Service temperature range: -30°C to 65°C / -22°F to 150°F
Freeze/thaw stability: passes 5 cycles
Color: grey
Coverage: up to 600 lineal feet per gallon
Static pressure: up to 25 inch
Drying time: 24-72 hours (ambient)
Clean up: warm water
Toxicity: Non toxic. No dangerous smell causing oxygen starvation. No increased pulsation, eliminates headaches.

Tested in accordance with U.L.I. 723 and U.L.C. S-102	
Flame Spread Classification	7
Smoke Developed	0
Fuel contributed	0
Flash Point (Open Cup)	Nil



"The longer it's on, the stronger it gets!"

Advantages

Testing under normal conditions. Seals upon contact. Not necessary to seal the inside of ducts and joints. Will adhere to most dirty surfaces without conventional cleaning measures. Time saving application method. Once cured no possibility of leaks through drying or moisture reaction. Cleans up in moments with water, no solvents are necessary. Application of sealer after ducts are installed.

Specification

Seal all joints with a water based sealant which shall be non-toxic, non-combustible and flame resistant in a wet or dry state and in order for acceptance it shall be tested in accordance with U.L.C. S-102 / U.L.I. 723 surface burning tests. Flame spread shall not exceed 25, and smoke developed shall not exceed 50. Flash point (open cup) shall be nil. Conforms to National Building Code standard 6.2.4.6.(2).

Standard of Acceptance: Multi-Purpose® as provided by Trans Continental Equipment Ltd, Montreal, Oshawa.

TCE Trans Continental Equipment Ltd Since 1952 info@tce.ca www.tce.ca
1025 Butler street, Montreal, Qc, Canada H3K 3E9 Tel.: 514 937-9145 Toll Free: 800 825-9145 Fax: 514 937-3196
240 Cordova Road, Oshawa, On, Canada L1J 1N9 Tel.: 905 579-0878 Toll Free: 800 314-9845 Fax: 905 579-2589

ChimneyFLEXible, ClipCap, ClipFlashing, ClipTee, Drop-In, Drop-Up and Quadralock are registered and/or trademarks of Trans Continental Equipment Ltd. ClipCap/ClipFlashing locking system is patented U.S. Pat No. 6145258 and Can. Pat. No. 2276674. ClipSnoutTee Patent Pending
Prices subject to inadvertent error or change without notice.

TESTED APPLICATIONS

a) High and Low Velocity Ducts, Chambers and Plenums. Sealing of all beads & joints. All types of flexible hoses.
b) Galvanized, Steel, Copper, Aluminum, PVC, Plastic, Lead, Asbestos cement, Chipboard fiber and Fibreglass ductwork and Plenums.
c) All types of insulating materials.
d) Repair of leaks on systems which are operating.
e) Repair of pipe insulation, magnesium, asbestos, fibreglass and cork.

ADVANTAGES OVER CONVENTIONAL SEALERS

1) Installation in temperatures below freezing.
2) Testing under normal conditions.
3) Seals upon contact.
4) Not necessary to seal the inside of ducts and joints.
5) Will adhere to most dirty surfaces without conventional cleaning methods.
6) Time saving application method.
7) Once cured no possibility of leaks through dryout or moisture reaction.
8) Clean up in moments with water, no solvents are necessary.
9) Application of sealer after ducts are installed.

METHOD OF APPLICATION

a) Apply a liberal coat of MP Sealant over the area to be sealed. Let dry and test up to 6" Static Pressure (S.P.)
b) Over 6" S.P. follow step #a, then wrap our special open weave tape over the area to be sealed. Overlap 2", pull tightly and then apply a second liberal coat covering all the weave tape.Let dry and test up to 25" S.P.
c) You now have a sealed joint which will be ready for testing in 24 - 72 hours.

TECHNICAL DATA

MP Sealer is a specially prepared sealant which adheres to almost anything. Once dry it is no longer soluble.
When necessary, the combination of Multi-Purpose sealer and Multi-Purpose open weave tape sets into a flexible air tight seal, which is exceptionally durable. Multi-Purpose is not intended for use as an insulating material and has no K factor.

TEMPERATURE RANGE

TEMPERATURE RANGE -	4° to 300°F / -15° to 150°C
STATIC PRESSURE -	up to 25" S.P.
FLEXIBILITY -	excellent (cured film 600% elongation)
WATER RESISTANCE -	very good
DRYING TIME -	24 - 72 hours
STORAGE LIFE -	24 months
COVERAGE -	600 Linear ft. per gal x 3" wide
COLOR -	green

SPECIFICATIONS:

FOR HIGH OR LOW VELOCITY



LOOK FOR THE LABEL

Seal all joints with a water based sealant which shall be non-toxic, non-combustible and flame resistant in a wet or dry state and in order for acceptance shall be tested in accordance with U.L.C. (S-102) (M-1980). Flame spread shall not exceed 25, and smoke developed shall not exceed 50. Flash point (open cup) - Nil. Conforms to National Building Code standard (see paragraph 6.2.4.6.(2). Each gallon shall bear a U.L.C. label.

Standard of acceptance -
"Multi-Purpose" as provided by
Transcontinental Equipment, Montreal, Toronto

technical.qxp:mp_special_02 06/2008/MR1209/OC2609

TCE Trans Continental Equipment Ltd Since 1952 info@tce.ca www.tce.ca
1025 Butler street, Montreal, Qc, Canada H3K 3E9 Tel.: 514 937-9145 **Toll Free: 800 825-9145** Fax: 514 937-3196
240 Cordova Road, Oshawa, On, Canada L1J 1N9 Tel.: 905 579-0878 **Toll Free: 800 314-9845** Fax: 905 579-2589

MULTI-PURPOSE®

OPEN WEAVE TAPE

For H.V.A.C. Systems operating at 6"+ Static pressure

MULTI-PURPOSE® NEW OPEN WEAVE TAPE

This new tape has the following advanced properties:

a) is made of a cotton/poly or fiberglass material.
b) more open area perforation, allows Multi-Purpose® sealant to flow through the pores and homogenize with both layers.
c) this allows quicker drying time because the outside air can get to the inner layer much quicker.
d) gives a stronger and even more flexible joint.
e) Our 3" permascreen tape is one inch wider than normal permascreen tape and instead of supplying a 50 yard roll, it comes in a 100 yard roll which means you don't have to wrap around the duct joint twice, therefore you save on cutting and installation or wrapping time.

PLEASE NOTE

One gallon of MULTI-PURPOSE® sealant covers 300 linear feet x 3 inches wide (2 coats), and one roll of MULTI-PURPOSE® NEW OPEN WEAVE TAPE also covers 300 lineal feet x 3 inches wide.

With our NEW Open Weave tape, inter-action with the sealant takes place resulting in a **STRONGER** and more **FLEXIBLE** joint. This results in **ONE COMPLETE FLEXIBLE BOND.**

Trans Continental Equipment Ltd Since 1952 info@tce.ca www.tce.ca
1025 Butler street, Montreal, Qc, Canada H3K 3E9 Tel.: 514 937-9145 **Toll Free: 800 825-9145** Fax: 514 937-3196
240 Cordova Road, Oshawa, On, Canada L1J 1N9 Tel.: 905 579-0878 **Toll Free: 800 314-9845** Fax: 905 579-2589

MULTI-PURPOSE®

DUCT SEALANT

Bulletin
Workplace Hazardous Material Information System (W.H.M.I.S.)

The new Canadian legislation and regulations concerning worker's right-to-know come into effect on October 31,1988. This system has as its key elements cautionary labelling of containers of hazardous materials, provision of Material Safety Data Sheets(MSDS's) and provision of worker's education.

Because of the difficulty of meeting the October 31, 1988 implementation date, Secondary Suppliers (users of chemical raw materials) have been granted an extention to March 15, 1989 for implementation. Reference:
Canada Gazette, Part 1, August 27, 1988.

Prior to the March 15, 1989 implementation date, to assist you in your compliance with W.H.M.I.S., Trans Continental Equipment Ltd. will apply a classified "workplace" label to all controlled products (where applicable) that we supply you with. (See note).

Also prior to March 15, 1989 you can refer to existing Trans Continental Equipment Ltd. MSDS's for precautionary and first aid measures.

NOTE: Product used by you: MULTI-PURPOSE® DUCT SEALER (GREEN or GREY).
This product does not fall under the ingredients disclosure list of over one thousand seven hundred (1700) ingredients and subsequently does not require any "workplace" label. Congratulations on using the **safest duct sealer**. Your men will be grateful knowing that special precautionary measures need not be applied when using or storing Multi-Purpose®.

May 1991.

Trans Continental Equipment Ltd Since 1952 info@tce.ca www.tce.ca
1025 Butler street, Montreal, Qc, Canada H3K 3E9 Tel.: 514 937-9145 **Toll Free: 800 825-9145** Fax: 514 937-3196
240 Cordova Road, Oshawa, On, Canada L1J 1N9 Tel.: 905 579-0878 **Toll Free: 800 314-9845** Fax: 905 579-2589

Mécanique Nordique
Plumbing
Heating
Ventillation
mecanique.nordique@hotmail.com

1255 Rue J.A.Bombardier
Lévis, Québec
G7A 2P4
Téléphone: 418-496-1109
Télécopieur: 418-496-3803

REVIEWED BY CONTRACTOR
Kudlik Construction Ltd.
NAME: Sandra Rousseau P.Eng
DATE: Jul 23, 2018

IQALUIT WWTP UPGRADE

DRAWING FOR APPROVAL

Ingineer : NUNAMI STANTEC

DRAWING #: AD-032

Section		23 05 29
Article		2.4 2.5
Plans		M-301 M-302 M-500
Application	:	PIPE HANGERS
Brand	:	ANVIL
Model	:	260 , 181, 161 , 261 , 94
Revised #	:	
Supplyer	:	Wolseley

Pages incl.		8
Date	:	**2018-07-23**
By	:	**Mécanique Nordique Inc.**

STANTEC PROJECT #: 110126045

SUBMITTAL # AD-032

This review by Stantec is for general conformance with the design concept of Stantec's design of the:

- ☐ Architectural
- ☐ Structural
- ☑ Mechanical
- ☐ Electrical
- ☐ Other

Stantec

component(s) only and does not mean that Stantec has verified or approves the shop drawing(s). The Contractor remains solely responsible for the shop drawing(s) and this review by Stantec does not relieve the Contractor of the Contractor's responsibility for errors or omissions in the shop drawing(s) or for meeting all requirements of the contract documents. This review does not mean that Stantec approves the detailed design inherent in the shop drawing, responsibility for which shall remain with the Contractor submitting same, nor does this review mean that Stantec accepts any deviation of the shop drawing(s) from the contract documents. The Contractor is responsible for confirming all dimensions and correlating them at the job site, for all construction means, methods and techniques, and for coordination of construction work of all trades, including coordination of all shop drawings.

- ☑ REVIEWED
- ☐ REVIEWED, AS NOTED
- ☐ REVISE AND RESUBMIT
- ☐ NOT REVIEWED

DATE 2018-07-26

BY Brendan Zrum, P.Eng

Fig. 260 (Formerly Afcon Fig. 371) Adjustable Clevis Hanger



Size Range: 1/2" through 30"
Material: Carbon steel
Finish: ☐ Plain, ☑ 8" & Smaller: Zinc Plated (Hot-Dip Galvanized optional), 10" & Larger: Hot-Dip Galvanized with Zinc Plated Bolts & Nuts, or ❑ Primed, also available in ☐ Plastic or ☐ Epoxy Coated.
Service: Recommended for the suspension of stationary pipe lines.
Maximum Temperature: Plain 650° F, Galvanized and Epoxy 450° F
Approvals: Complies with Federal Specification A-A-1192A (Type 1), *WW-H-171-E (Type 1)*, ANSI/MSS SP-69 and MSS SP-58 (Type 1). FM Approved (Sizes 3/4" through 8"), UL and ULC Listed (Sizes 1/2" through 8")
Installation: Hanger load nut *above* clevis must be tightened securely to assure proper hanger performance.
Adjustment: Vertical adjustment without removing pipe may be made from 3/8" through 5 1/8", varying with the size of clevis. Tighten upper nut after adjustment.
Features:

- Design has yoke on outside of lower U-strap so yoke cannot slide toward center of bolt, thus bending of bolt is minimized.
- Sizes 5" and up have rod and two nuts instead of bolt and nut; thread length on clevis rod is such that the thread locks the nuts in place, and threads are not in shear plane.

Ordering: Specify pipe size, figure number, name and finish.
Notes:

- Punched forming holes may be present on certain sizes of this clevis hanger. These holes are solely for the purpose of manufacturing, and do not effect the structural integrity or load carrying capacities of these hangers.
- For insulated line options without shields, see Figures 260 ISS and Figure 300. For insulated line options with shields, see Figures 167 and 168. For ductile iron pipe sizes, see Figure 590.
- Fig. 260F (Felt lined) – available for use for suspension of copper (or other material) so as to prevent electrolysis between the dissimilar metals of the hanger and the pipe, tube or conduit.

Caution: When an oversize clevis is used, a pipe spacer or multispacer should be placed over clevis bolt to ensure that the lower U-strap will not move in on the bolt.

PROJECT INFORMATION	APPROVAL STAMP
Project:	☐ Approved
Address:	☐ Approved as noted
Contractor:	☐ Not approved
Engineer:	**Remarks:**
Submittal Date:	
Notes 1:	
Notes 2:	

Fig. 260 (Formerly Afcon Fig. 371) Adjustable Clevis Hanger (cont.)

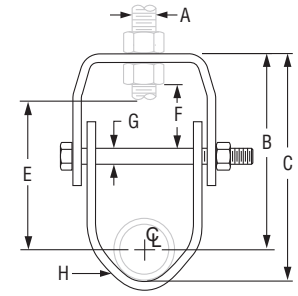

Pipe Size 1/2" to 3/4"

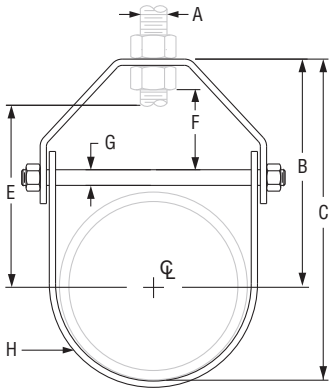

Pipe Sizes 1" and Larger

FIG. 260: DIMENSIONS (IN) • LOADS (LBS) • WEIGHTS (LBS)

Pipe Size	Max Load	Span Ft.	Weight	Rod Size A	B	C	Rod Take Out E	Adjust. F	G	H Width Lower
1/2	610	7*	0.34	3/8	2 3/16	2 11/16	1 1/2	5/8	1/4	1
3/4			0.34		2		1 5/16			
1	730		0.35		2 5/16	3	1 5/8			
1 1/4			0.40		2 3/8	3 1/4	1 11/16			
1 1/2		9*	0.45		2 13/16	3 13/16	2 1/8	7/8		
2		10*	0.50		3 5/16	4 1/2	2 5/8	1 1/8		
2 1/2	1,350	11*	0.65	1/2	4 1/16	5 1/2	3 3/16	1 5/16	3/8	
3		12*	0.85		4 3/4	6 1/2	4 1/16	1 5/8		
3 1/2		13*	1.10		5 1/16	7 1/16	4 3/16	1 13/16		1 1/4
4	1,430	14*	1.51	5/8	5 9/16	7 13/16	4 1/2	1 11/16	3/8	
5		16*	1.70		6 9/16	8 15/16	5 1/2	1 15/16		1 3/16
6	1,940	17*	3.10	3/4	6 15/16	10 1/4	5 3/4	1 11/16	1/2	1 7/16
8	2,000	19*	4.75		8 3/8	12 11/16	7 3/16	2		
10	3,600	22*	8.60	7/8	9 7/8	15 1/4	8 7/16	2 1/8	5/8	1 3/4
12	3,800	23*	11.20		11 9/16	17 15/16	10 1/8	2 13/16		2
14	4,200	25*	12.50	1	12 9/16	19 9/16	10 11/16	2 11/16	3/4	
16	4,600	27	19.85		14	22	12	2 3/4	1	2 1/2
18	4,800	28	22.25		15 15/16	24 15/16	13 15/16	3 13/16		
20	4,800	30	40.33	1 1/4	17 9/16	27 9/16	15 3/16	3 7/8	1 1/4	3
24	4,800	32	49.83		19 13/16	31 13/16	17 5/16		7/8*	
30**	6,000	33	70.18		24 3/16	39 3/16	21 9/16	5 1/8	1 1/4	

"Span" represents the maximum recommended distance between hangers on a continuous and straight run of horizontal standard weight steel pipe filled with water. In all cases, verify that chosen location of hangers does not subject hangers to a load greater than the maximum recommended load shown above. *Indicates that span represents the maximum span for water filled pipe.

* The 24" pipe size assembly includes a 1 1/4" SCH 40 pipe spacer over the 7/8" threaded rod.

** 30" pipe size: When assembled, the U-strap sits outside of the yoke.

Fig. 181

Adjustable Steel Yoke Pipe Roll

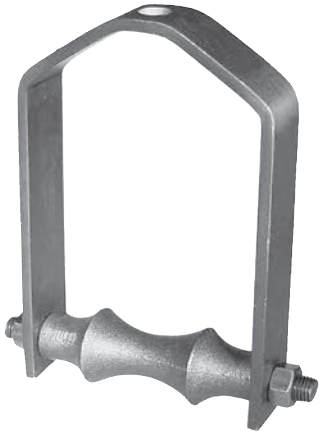

Size Range: 2 1/2" through 24"

Material: Cast iron roll; carbon steel yoke, roll rod and hex nuts

Finish: ☐ Plain, ☑ Hot-Dip Galvanized Yoke with Zinc Plated Parts or ❑ Resilient Coated

Service: For suspension of pipe from a single rod where longitudinal movement may occur because of expansion or contraction.

Maximum Temperature: 400° F at roller, 300° F at resilient coated roller.

Approvals: Complies with Federal Specification A-A-1192A (Type 43), *WW-H-171-E (Type 44)*, ANSI/MSS SP-69 and MSS SP-58 (Type 43).

Features: Advantages of pipe rollers with a protective resilient coated covering.

- Non conductive pipe rollers - prevent the passing of current from pipeline to structure.
- Corrosion resistant - for protection against severe weather conditions, moderate corrosive conditions such as marine atmospheres and weather resistant to ultra-violet radiation.
- Low coefficient of friction between pipe and resilient coated pipe roller.

How to size: If the roll is to support bare pipe, select the size directly from nominal pipe size (see below). If used with pipe covering protection saddle, see Figure 160 to 166A for size of pipe roll to be used.

Ordering: Specify pipe roll size, figure number, name and finish. Be certain to order oversized rolls when insulation and protection saddles are required.

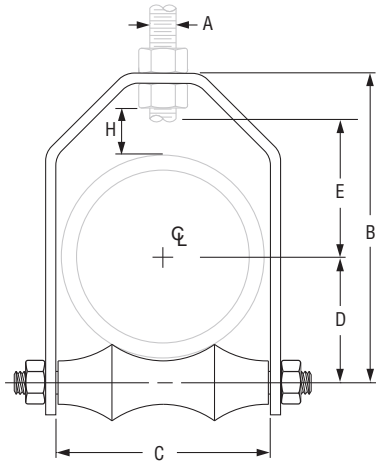

FIG. 181: DIMENSIONS (IN) • LOADS (LBS) • WEIGHT (LBS)

Pipe Size	Max O.D. of Covering	Max Load	Wgt.	Rod Size A	B	C	D	Rod Take Out E	H
2 1/2	3	225	1.7	1/2	5 3/4	3 1/4	1 15/16	2 7/8	1 11/16
3	3 5/8	310	2.2		6 3/8	3 7/8	2 1/4	3 1/8	1 5/8
3 1/2	4 1/8	390	2.5		7	4 3/8	2 9/16	3 1/2	1 11/16
4	4 11/16	475	3.2	5/8	7 9/16	4 15/16	2 13/16	3 5/8	1 5/8
5	5 3/4	685	6.3		9 1/8	6	3 7/16	4 1/2	1 15/16
6	6 7/8	780	9.3	3/4	10 5/16	7 1/8	4	5	1 7/8
8	9		14.5		12 11/16	9 1/4	5 1/8	6 1/8	2
10	11	965	18.8	7/8	15 1/16	11 1/4	6 3/8	7 1/4	2 1/16
12	13	1,200	27.7		17 7/16	13 1/4	7 7/16	8 3/8	2 1/4
14	14 1/4		39.1	1	18 7/8	14 1/2	8 3/8	8 3/4	2
16	16 1/4		49.1		20 13/16	16 1/2	9 3/8	9 11/16	1 15/16
18	18 1/4	1,400	57.8		23 3/4	18 1/2	10 7/16	11 7/16	2 13/16
20	20 1/4	1,600	75.9	1 1/4	26	20 1/2	11 5/8	12 1/4	2 1/2
24	24 1/4	1,800	119.3	1 1/2	32 5/16	24 5/8	13 15/16	15 3/4	4 3/8

DI/CI ROLL SIZING

DI/CI Pipe Size	Fig. 181 Roller Size
3	4
4	5
6	6
8	8
10	10
12	14
14	16
16	18
18	20
20	24

PROJECT INFORMATION	APPROVAL STAMP
Project:	☐ Approved
Address:	☐ Approved as noted
Contractor:	☐ Not approved
Engineer:	**Remarks:**
Submittal Date:	
Notes 1:	
Notes 2:	

Pipe Covering Protection Saddle

For Nominal Thickness of Covering Shown

☐ Fig. 160: 1"
☑ Fig. 161: 1½"
☐ Fig. 162: 2"
☐ Fig. 163: 2½"
☐ Fig. 164: 3"
☐ Fig. 165: 4"
☐ Fig. 165A: 4" (Alloy)
☐ Fig. 166A: 5½" (Alloy)

Size Range: ¾" through 36"

Material:

- Figs. 160, 161, 162, 163, 164, and 165 are curved carbon steel plate.
- Figs. 165A and 166A are alloy steel manufactured from ASTM A 387 Grade 22 Chrome Molybdenum steel plate.
- Figs. 165A and 166A have a welded-in center plate in all sizes.
- All other saddles have a welded-in center plate for pipe sizes 12" and larger.
- All saddles are 12" long with side edges turned up.

Finish: Plain

Service: Designed for use on insulated high temperature systems where heat losses are to be kept to a minimum and to protect insulation against damage.

Maximum Temperature: 650° F carbon steel, 950° F alloy steel.

Approvals: Complies with Federal Specification A-A-1192A (Type 39A & 39B), *WW-H-171-E (Type 40A & 40B)*, ANSI/MSS SP-69 and MSS SP-58 (Type 39A & 39B).

Features: Permits finished, weather tight covering at all points of pipe support.

Ordering: Specify pipe size, figure number and name. Data for 42" size available on request.

Installation: It is recommended that saddle be welded to the pipe.



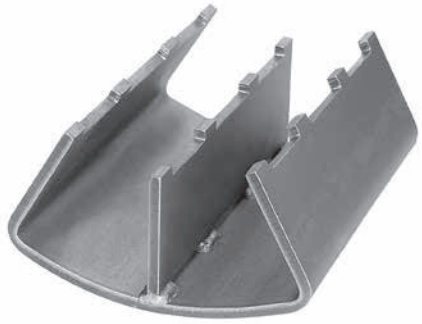

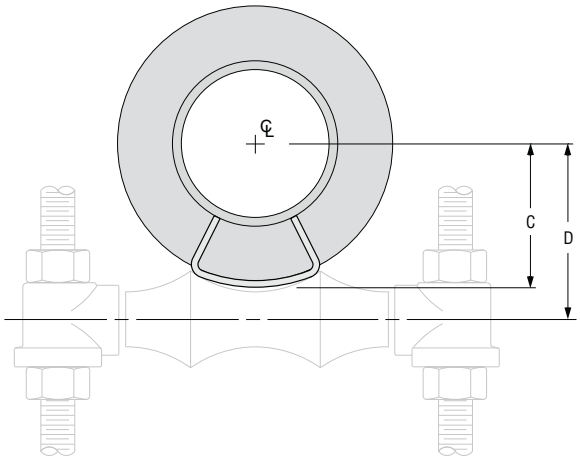

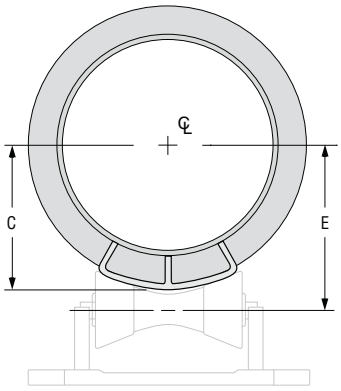

Continued on Following Page.

PROJECT INFORMATION	APPROVAL STAMP
Project:	☐ Approved
Address:	☐ Approved as noted
Contractor:	☐ Not approved
Engineer:	Remarks:
Submittal Date:	
Notes 1:	
Notes 2:	

Fig. 160 to Fig 166A Pipe Covering Protection Saddle (cont.)

FIG. 160, 161, 162, 163, 164, 165, 165A, 166A: DIMENSIONS (IN) • LOADS (LBS) • WEIGHT (LBS)										
Pipe Size	Fig. No.	Max Load ■	Weight	Size of Pipe Roll			Center Line of Pipe to Outside of Saddle C	Center Line of Pipe to Center Line of Roll		
				Figs. 171, 175, 177	Fig. 181	Figs. 271, 274, 277		D		E
								Figs. 171, 175, 177	Fig. 181	Figs. 271, 274, 277
¾	160•	1,200	1.4	2	2½	2-3½	1⅝	2 1/16	2⅛	2¼
	161•		2.1	3	3½		2 3/16	2¾	2¾	2⅞
	162•		2.8	4	5		2 11/16	3 5/16	3 5/16	3⅜
1	160•	1,200	1.4	2½	3	2-3½	1 13/16	2 5/16	2¼	2 7/16
	161•		2.1	3	4		2 5/16	2⅞	2⅞	3
	162•		2.8	4	5		2⅞	3½	3½	3½
1¼	160	1,200	1.4	2½	3	2-3½	1 15/16	2½	2 7/16	2 9/16
	161•		2.1	3½	5		2 9/16	3 1/16	3 1/16	3 3/16
	162•		2.8	4			3	3 5/8	3 5/8	3 11/16
	163•		3.6	5	6	4-6	3¾	4⅜	4⅜	4⅜
1½	160	1,200	1.5	3	3½	2-3½	2⅛	2⅝	2⅝	2 11/16
	161•		2.1	3½	5		2⅝	3¼	3¼	3 5/16
	162•		3.2	5	6	4-6	3 5/16	4	4	3⅞
	163•		3.6	6	8		3⅞	4½	4⅝	4½
2	160	1,200	1.7	3½	4	2-3½	2⅜	3	2 15/16	3 1/16
	161•		2.3	4	5		2⅞	3½	3½	3 9/16
	162•		3.2	5	6	4-6	3 9/16	4¼	4¼	4 3/16
	163•		3.6	6	8		4 1/16	4¾	4 13/16	4¾
	164•		4.5	8			4 9/16	5⅜	5⅜	5¼
2½	160	1,200	1.7	3½	5	2-3½	2 11/16	3¼	3¼	3 5/16
	161		2.8	5	6	4-6	3 5/16	4	4	3 15/16
	162		3.2	6	8		3⅞	4½	4⅝	4½
	163		4.1	8			4¼	5⅛	5⅛	5
	164		4.5		10		4⅞	5⅝	5¾	5½
3	160	1,200	1.9	4	5	2-3½	2 15/16	3½	3½	3 9/16
	161		2.8	5	6	4-6	3⅝	4 5/16	4 5/16	4¼
	162		3.6	6	8		4⅛	4 13/16	4 13/16	4 11/16
	163		4.1	8			4 11/16	5 7/16	5 7/16	5 5/16
	164		4.9		10	8-10	5 1/16	6	6	6 1/16
3½	160	1,200	2.3	5	6	4-6	3 5/16	4	4	3 15/16
	161		3.2	6	8		3 11/16	4 9/16	4 9/16	4½
	162		3.6	8			4 5/16	5⅛	5⅛	5
	163		4.5		10	8-10	4 11/16	5⅝	5⅝	5 11/16
	164		4.9	10			5⅜	6 5/16	6 5/16	6⅜
4	160	1,200	2.3	5	6	4-6	3 9/16	4¼	4¼	4 3/16
	161		3.2	6	8		4 1/16	4⅞	4⅞	4¾
	162		3.6	8			4 9/16	5⅜	5⅜	5¼
	163		4.5		10	8-10	5	5 15/16	5 15/16	6
	164		4.9	10			5⅝	6 9/16	6 9/16	6⅝
	165		6.1		12	12-14	6½	7⅝	7⅝	7 9/16
	165A	7,200	11.6							
	166A		15.7	14	16		8⅛	9⅝	9½	9 5/16

■ Maximum recommended loads are applicable only when saddle is used on a flat bearing surface or roller hangers and tack welded to pipe. When saddle is used with a pipe roll, the maximum load for the assembly is the smaller of the two loads.

• Saddles may require notching when used with a U-bolt.

Continued on Following Page.

REVIEWED by MV

Fig. 261 (Formerly Afcon Fig. 400) Extension Pipe or Riser Clamp

Size Range: 3/4" through 24"
Material: Carbon steel
Finish: ☐ Plain, ☐ Hot-Dip Galvanized with Zinc Plated Bolts & Nuts, ☑ Epoxy Coated or ☐ Painted.
Service: For support of stationary steel pipe risers, cast iron pipe or conduit. This product is not intended for use with hanger rods. For this application refer to Fig. 40 Riser Clamp, page 49.
Maximum Temperature: Plain 650° F, Galvanized and Epoxy 450° F
Approvals: Complies with Federal Specification A-A-1192A (Type 8) *WW-H-171-E (Type 8)*, ANSI/MSS SP-69 and MSS SP-58 (Type 8). UL, ULC Listed (Sizes 1 1/2" - 8").
Installation: Clamp is fitted and bolted preferably below a coupling, hub or welded lugs on steel pipe. Bolt torques should be per industry standards (see page 248). Clamp is designed for standard steel pipe O.D. and this must be considered in sizing the riser for other types of piping.
Ordering: Specify pipe size, figure number, name and finish.



Note: Refer to Technical Data Section of the Pipe Hanger Catalog for cast iron soil pipe data.

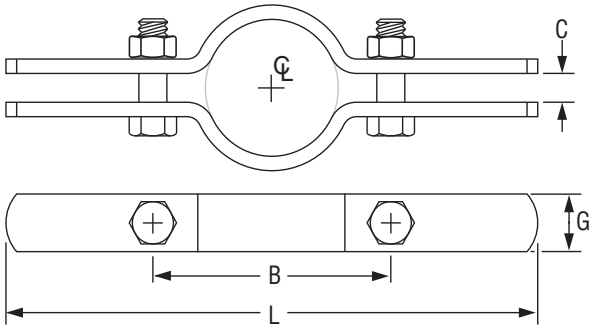

FIG. 261: DIMENSIONS (IN) • LOADS (LBS) • TORQUE (FT-LBS) • WEIGHT (LBS)

Pipe Size	Max Load	Weight	L	G Width	B	C	Bolt Diameter	Torque Values
3/4	220	1.1	8 7/8	1	2 7/8	3/8	3/8	21
1		1.1			3 1/8			
1 1/4	250	1.6	10		3 1/2			
1 1/2		1.6	10 1/4		3 7/8			
2	300	1.7			4 1/4	1/2	7/16	32
2 1/2	400	1.9	11 1/4		4 3/4			
3	500	1.9	11 3/8		5 1/2			
3 1/2	600	2.3	12 7/8		6 1/2	1/2	1/2	46
4	750	2.4			7			
5	1,500	3.6	13 3/4	1 1/2	8			
6	1,600	4.0	14 3/4		9			
8	2,500	7.6	18 1/2		12	5/8	5/8	100
10		11.1	20 1/4	2	13 3/4			
12	2,700	16.5	22 3/4		15 3/4			
14		17.7	24		17 1/4			
16	2,900	30.4	26	2 1/2	19 3/4	3/4	3/4	150
18		33.8	28		21 3/4			
20		35.0	30		23 3/4			
24	3,200	82.0	36 3/4	3	30	1	7/8	190

PROJECT INFORMATION	APPROVAL STAMP
Project:	☐ Approved
Address:	☐ Approved as noted
Contractor:	☐ Not approved
Engineer:	**Remarks:**
Submittal Date:	
Notes 1:	
Notes 2:	

REVIEWED by MV

Fig. 94

Wide Throat Top Beam C-Clamp

Size Range: 5/8" and 3/4"
Material: Ductile iron body, hardened steel cup point set screw and locknut.
Finish: ☐ Plain or ☑ Zinc Plated (Hot-Dip Galvanized optional)
Service: Recommended for use under roof installations with bar joist type construction, or for attachment to the top flange of structural shapes where the vertical hanger rod is required to be offset from the edge of the flange and where the thickness of joists or flange does not exceed 1 5/16".
Approvals: Complies with Federal Specification A-A-1192A (Type 19) *WW-H-171-E (Type 19)*, ANSI/MSS SP-69 and MSS SP-58 (Type 19), UL Listed.
How to size: Size of clamp is determined by size of rod to be used.
Installation: Follow maximum recommended set screw torque values per MSS-SP-69.
Features:

- Provides clamping to bar joists which are directly under roof installations.
- Provides for vertical hanger rod installed offset from the edge of the beam flange.
- Malleable iron body assures full thread engagement of rod.

Ordering: Specify rod size, figure number, name of clamp and finish.

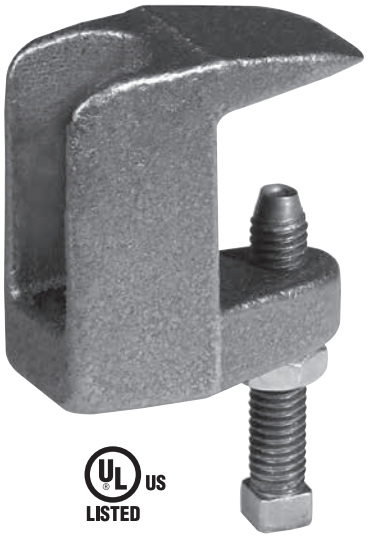

UL US LISTED

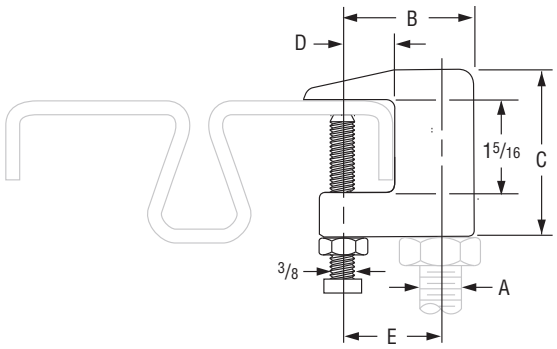

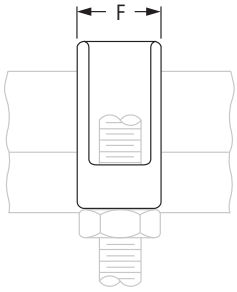

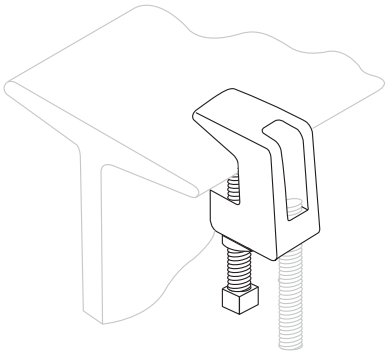

FIG. 94: DIMENSIONS (IN) • LOAD (LBS) • TORQUE (IN-LBS) • WEIGHT (LBS)									
Rod Size A	Set Screw Size	Torque Value	Max Loads ■	Weight	B	C	D	E	F
5/8	3/8	60	1,200	0.66	1 3/4	2 1/4	3/4	1 1/4	1
3/4	3/8	60	1,600	0.83	1 7/8	2 3/8		1 3/8	1 3/16

■ Maximum temperature of 450° F

PROJECT INFORMATION	APPROVAL STAMP
Project:	☐ Approved
Address:	☐ Approved as noted
Contractor:	☐ Not approved
Engineer:	**Remarks:**
Submittal Date:	
Notes 1:	
Notes 2:	

REVIEWED BY CONTRACTOR

Kudlik Construction Ltd.

NAME: Sandra Rousseau P.Eng

DATE: Oct 04, 2018

Mécanique Nordique
Plumbing
Heating
Ventillation
mecanique.nordique@hotmail.com

1255 Rue J.A.Bombardier
Lévis, Québec
G7A 2P4
Téléphone: 418-496-1109
Télécopieur: 418-496-3803

IQALUIT WWTP UPGRADE

DRAWING FOR APPROVAL

Ingineer : NUNAMI STANTEC

DRAWING #: AD-033R2

Section 23 05 49
Article 1.4 , 1.5 PART 2
Plans ALL
Application : SEISMIC
Brand :
Model :
Revised # :
Supplyer : GESTION SISMIQUE INC

Pages incl. 29
Date : **2018-08-29**
By : **Mécanique Nordique Inc.**

STANTEC PROJECT #: 110126045

SUBMITTAL # AD-033R2

This review by Stantec is for general conformance with the design concept of Stantec's design of the:
☐ Architectural ☐ Electrical
☐ Structural ☐ Other
☑ Mechanical

Stantec

component(s) only and does not mean that Stantec has verified or approves the shop drawing(s). The Contractor remains solely responsible for the shop drawing(s) and this review by Stantec does not relieve the Contractor of the Contractor's responsibility for errors or omissions in the shop drawing(s) or for meeting all requirements of the contract documents. This review does not mean that Stantec approves the detailed design inherent in the shop drawing, responsibility for which shall remain with the Contractor submitting same, nor does this review mean that Stantec accepts any deviation of the shop drawing(s) from the contract documents. The Contractor is responsible for confirming all dimensions and correlating them at the job site, for all construction means, methods and techniques, and for coordination of construction work of all trades, including coordination of all shop drawings.

☑ REVIEWED
☐ REVIEWED, AS NOTED
☐ REVISE AND RESUBMIT
☐ NOT REVIEWED

DATE 2018-10-10

BY Brendan Zrum, P.Eng

SEISMIC RESTRAINT GUIDELINE

***Issued by*:** Gestion Sismique Inc.
***Delivered to*:** Mécanique Nordique Inc.
***Project*:** IQALUIT WASTE WATER TREATMENT
***Discipline*:** Plumbing, Heating and HVAC
***Project address*:** Fremont Street**,** Iqaluit, Nunavut, Canada
Document number : D-0342
Registry :

DATE	Revision	Description
2018-07-25		For Approbation
2018-08-08	1	
2018-08-29	2	

This document was prepared and approved by:

PERMIT TO PRACTICE
GESTION SISMIQUE INC.
Signature
Date 2018-08-29
PERMIT NUMBER: P 1295
NT/NU Association of Professional Engineers and Geoscientists

REGISTERED PROFESSIONAL ENGINEER
Q.H. BUI
LICENSEE
NT/NU
August 28, 2018

Quang Hien Bui, Ing

PART 1: HEATING AND PLUMBING SUSPENDED PIPING

GENERAL NOTES FOR SUSPENDED PIPING

1- For individual supports, seismic restraints are required if the distance between the top of the pipe and it's attachment to the structure measures 12'' or more.

2- For suspended trapezes, seismic restraints are required if the length of the threaded rods measures 12'' or more.

3- Outside of a mechanical room, seismic restraints are required for pipes with a diameter of 2 ½'' or more.

4- Inside of a mechanical room, seismic restraints are required for pipes with a diameter of 1 ¼'' or more.

5- For natural gas, compressed air, medical gases and all other dangerous, explosive, flammable or life safety components, Seismic restraints are required regardless of the pipes diameter.

6- Each straight run with 2 or more supports requires a minimum of 2 transversal restraints and 1 longitudinal restraint.

7- The position, spacing and methods for seismic restraints have to be decided by Gestion Sismique Inc. engineers only.

8- Once decided, seismic restraints must always be installed on or next to an existing support with a threaded rod in place at maximum 4'' allowing a rod stiffener to be efficient.

9- There are flexible restraints and rigid restraints. It is forbidden to mix both of them on the same straight run.

10- For a system, it is forbidden to have restraints on two different part of a building, like anchoring to a wall and a ceiling.

RECOMMENDED SEISMIC ANCHORS FOR THREADED RODS

KWIK HUS-EZ I (KH-EZ I) Carbon Steel Screw Anchor 3.3.7

3.3.7.1 Product description

KWIK HUS-EZ I (KH-EZ I) anchors are comprised of a body with an internally threaded hex washer head. The anchor is manufactured from carbon steel and is heat treated. It has a minimum 0.0003 inch (8 µm) zinc coating in accordance with DIN EN ISO 4042. The internally threaded head is larger than the diameter of the anchor and is formed with serrations on the underside. The anchor body is formed with threads running most of the length of the anchor body. The anchor is installed in a predrilled hole with a powered impact wrench or torque wrench. The anchor threads cut into the concrete on the sides of the hole and interlock with the base material during installation. Applicable base materials include normal-weight concrete, structural lightweight concrete and lightweight concrete over metal deck.

Guide specifications

Screw anchors shall be KWIK HUS-EZ I as supplied by Hilti, Inc. Anchors shall be manufactured from heat treated carbon steel material, zinc plated to a minimum thickness of 8 µm. Anchors shall be installed using a drill bit of same nominal diameter as anchor.

Product features

- Suitable for cracked and uncracked normal-weight and lightweight concrete, and lightweight concrete over metal deck.
- Suitable for seismic and nonseismic loads.
- Quick and easy to install
- Thread design enables quality setting and exceptional load values in wide variety of base material strengths.
- Anchor is fully removable
- Anchor size is same as drill bit size.
- Suitable for reduced edge distances and spacing.

3.3.7.2 Material specifications

KWIK HUS-EZ I anchors are manufactured from carbon steel. The anchors are bright zinc plated to a minimum thickness of 8 µm.

3.3.7.3 Technical data

3.3.7.3.1 ACI 318-14 Chapter 17 design

The technical data contained in this section are Hilti Simplified Design Tables. The load values were developed using the design parameters and variables of ESR 3027 and the equations of ACI 318-14 Chapter 17. For a detailed explanation of the Hilti Simplified Design Tables, refer to section 3.1.8. Data tables from ESR 3027 are not contained in this section, but can be found at www.icc-es.org or at www.hilti.com.

3.3.7.1 Product description
3.3.7.2 Material specifications
3.3.7.3 Technical data
3.3.7.4 Installation instructions
3.3.7.5 Design guidelines
3.3.7.6 Ordering information



3.3.7

Listings/Approvals

ICC-ES (International Code Council)
ESR-3027
City of Los Angeles
Research Report No. 25897
FM (Factory Mutual)
Pipe Hanger Components for Automatic Sprinkler Systems for 3/8 internal threaded diameter anchor

Independent code evaluation

IBC® / IRC® 2015
IBC® / IRC® 2012
IBC® / IRC® 2009
IBC® / IRC® 2006

PART 2: SUSPENDED HVAC DUCTS

GENERAL NOTES FOR SUSPENDED HVAC DUCTS

1- For suspended trapezes with hvac ducts, seismic restraints are required if the length of the threaded rods measures 12'' or more.

2- Seismic restraints are required on rectangular ducts with 6 square feet or more of diameter.

3- Seismic restraints are required on circular ducts with 28 inches or more of diameter.

4- Chimneys and systems with hazardous or toxic gas, needs to be restrained regardless of its diameter.

5- When installing restraints on hvac ducts, the duct needs to be squeezed with a support over and under the duct and the supports needs to be secured with metal screws every 12 inches.

6- Each straight run with 2 or more supports requires a minimum of 2 transversal restraints and 1 longitudinal restraint.

7- The position, spacing and methods for seismic restraints have to be decided by Gestion Sismique Inc. engineers only.

8- Once decided, seismic restraints must always be installed on or next to an existing support with a threaded rod in place at maximum 4'' allowing a rod stiffener to be efficient.

9- There are flexible restraints and rigid restraints. It is forbidden to mix both of them on the same straight run.

10- For a system, it is forbidden to have restraints on two different part of a building, like anchoring to a wall and a ceiling.

PART 3: SUSPENDED AND GROUND UNITS

1. Earthquake data

City:	***IQALUIT, Nunavut***
Latitude, Longitude	***63.748041, -68.506128***
Risk Category:	***post-disaster***
Geotechnical Site Class:	***B***
Importance factor, IE:	***1,5***
Design spectral response acceleration, Sa(0.2):	***0,087***
Acceleration-based site coefficient, Fa:	***0,8***

2. Oil Tank (25000 L)

A) Coefficient of the Lateral Seismic Force (CLS) and Seismic Force:

- Coefficient of the Lateral Seismic Force (CLS):

Equipment:	***Oil Tank***
Mass (pound):	***64665***
Location	***Exterior***
Equipment:	***Standard***
Element or Component Category:	***11B***
Element or Component Seismic Coefficient, Cp:	***1***
Response Amplification Factor, Ar:	***2,5***
Height Coefficient, Ax:	***1***
Element or Component Response Modification Coefficient, Rp:	***2,5***
Modification Factor, Sp:	***1***
Coefficient of the Lateral Seismic Force (CLS):	***0,031***

- Seismic Force:
Lateral Seismic Force = CLS* mass = **3376** pound

- Lateral Seismic Force per support point (4 support points):
Tensile force = **0** pound
Shear force = **844** pound

B) Anchorages

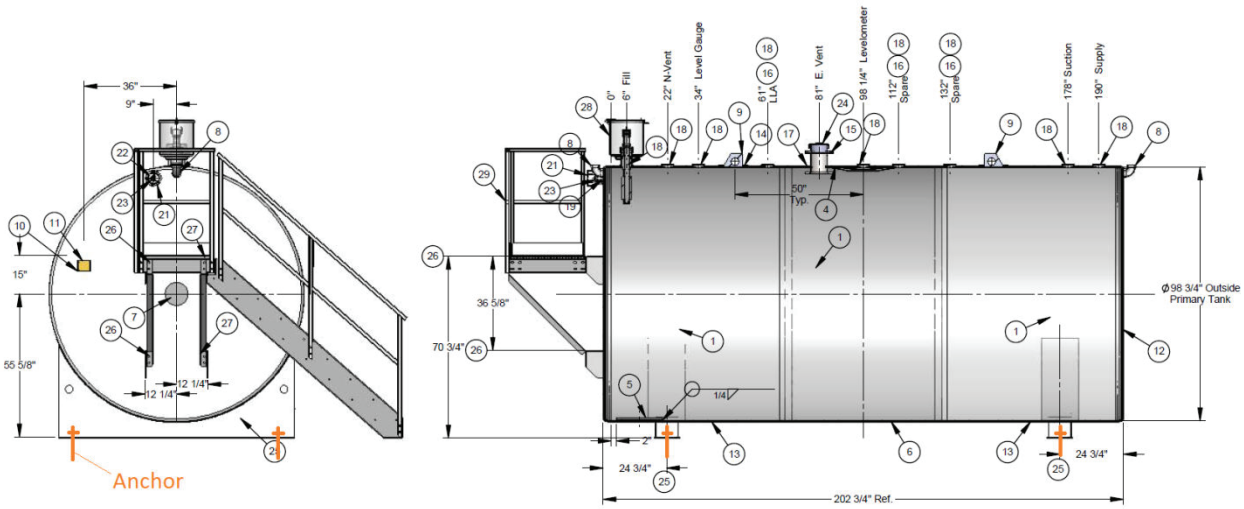

CONCLUSION :

4 seismic anchors of 3/4'' diameter x 6'' embedment.
Minimum thickness of floor: 8''
Minimum edge distance: 6''

3. Pumps P-1.1 and P-1.2 (165 pound); P-1.3 and P-1.4 (142 pound);

A) Coefficient of the Lateral Seismic Force (CLS) and Seismic Force:

- Coefficient of the Lateral Seismic Force (CLS):

Equipment: ***Pump P-1.1 (165lbs)***
Mass (pound): ***165***
Location: ***Mechanical room***

Equipment: ***Standard***
Element or Component Category: ***11B***
Element or Component Seismic Coefficient, Cp: ***1***
Response Amplification Factor, Ar: ***2,5***
Height Coefficient, Ax: ***3***
Element or Component Response Modification Coefficient, Rp: ***2,5***
Modification Factor, Sp: ***3***
Coefficient of the Lateral Seismic Force (CLS): ***0,094***

- Seismic Force:

Lateral Seismic Force = CLS* mass = = **15.51** pound

B) Suspension system

The pumps need to be attached to the steel service platform:

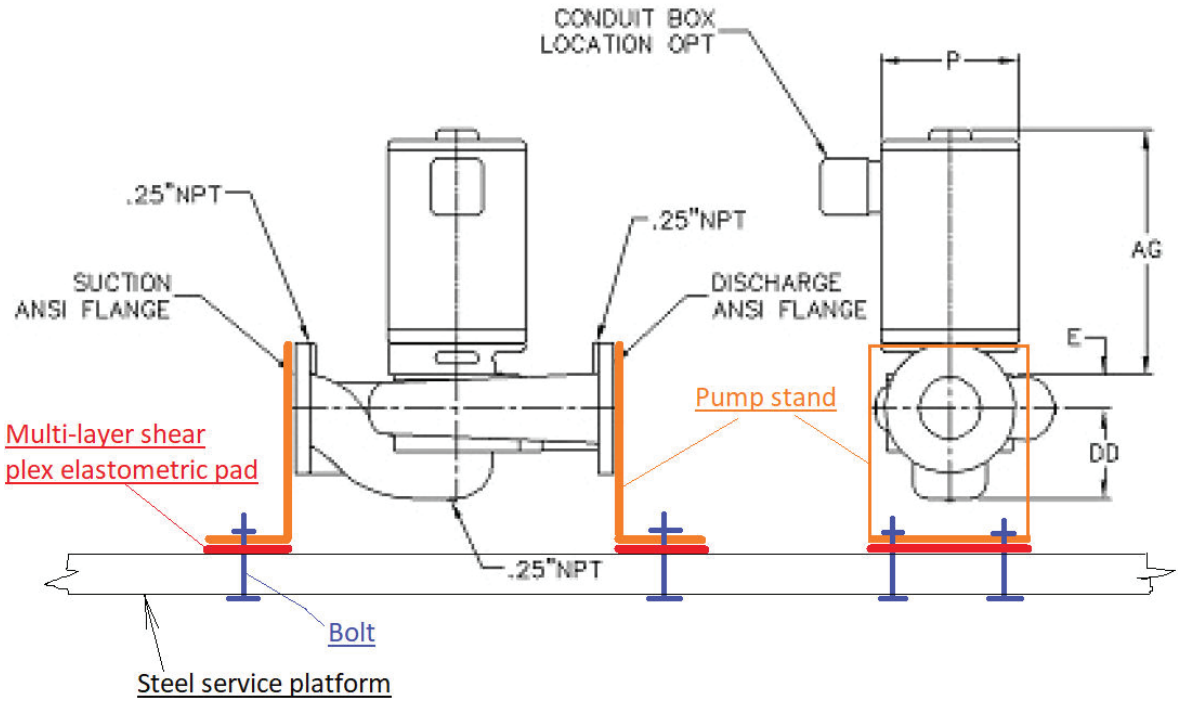

Bolt ASTM A307 of 3/8'' diameter
- Pump Stand:

LES PRODUITS SISMIQUES

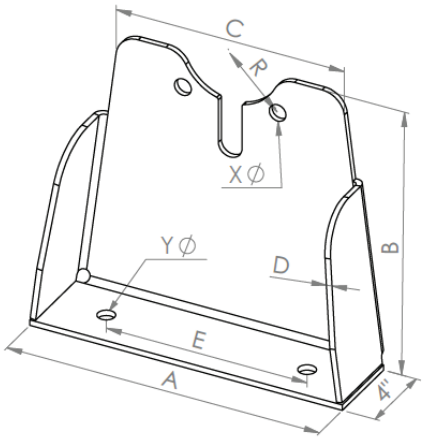

Modèle		A	B	C	D	E	X	Y	R
SPS-1.5	1.5 inch	14	12	10 1/4	1/4	9	5/8	3/4	1 15/16
SPS-2	2 inch	14	12	10 1/4	1/4	9	3/4	3/4	2 3/8
SPS-2.5	2.5 inch	14	12	10 1/4	1/4	9	3/4	3/4	2 3/4
SPS-3	3 inch	14	12	10 1/4	1/4	9	3/4	3/4	3
SPS-4	4 inch	18	15	15 9/16	3/8	12	3/4	7/8	3 3/4
SPS-5	5 inch	18	15	15 9/16	3/8	12	7/8	7/8	4 1/4
SPS-6	6 inch	18	15	15 9/16	3/8	12	7/8	7/8	4 3/4
SPS-8	8 inch	18	15	15 9/16	3/8	12	7/8	7/8	5 7/8

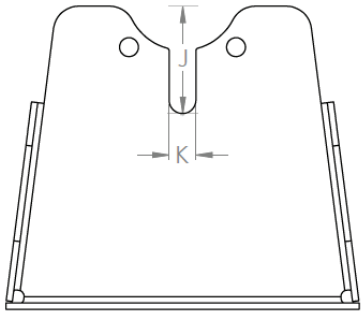

	J	K
1.5 inch	2.94	0.94
2 inch	3.50	1.06
2.5 inch	4	1.06
3 inch	4.25	1.06
4 inch	5	1.06
5 inch	5.56	1.19
6 inch	6.06	1.19
8 inch	7.31	1.19

4. Domestic water heaters (DHWH-1)

A) Coefficient of the Lateral Seismic Force (CLS) and Seismic Force:
- Coefficient of the Lateral Seismic Force (CLS):

Equipment: ***DHWT-1***
Mass (pound): ***1358***
Location: ***Mechanical room***

Equipment: ***Standard***
Element or Component Category: ***11B***
Element or Component Seismic Coefficient, Cp: ***1***
Response Amplification Factor, Ar: ***2,5***
Height Coefficient, Ax: ***1***
Element or Component Response Modification Coefficient, Rp: ***2,5***
Modification Factor, Sp: ***1***
Coefficient of the Lateral Seismic Force (CLS): ***0,031***

- Seismic Force:
Lateral Seismic Force = CLS* mass = **42.1** pound
B) Anchorages

DHWH-1 is to be installed on an existing concrete floor.

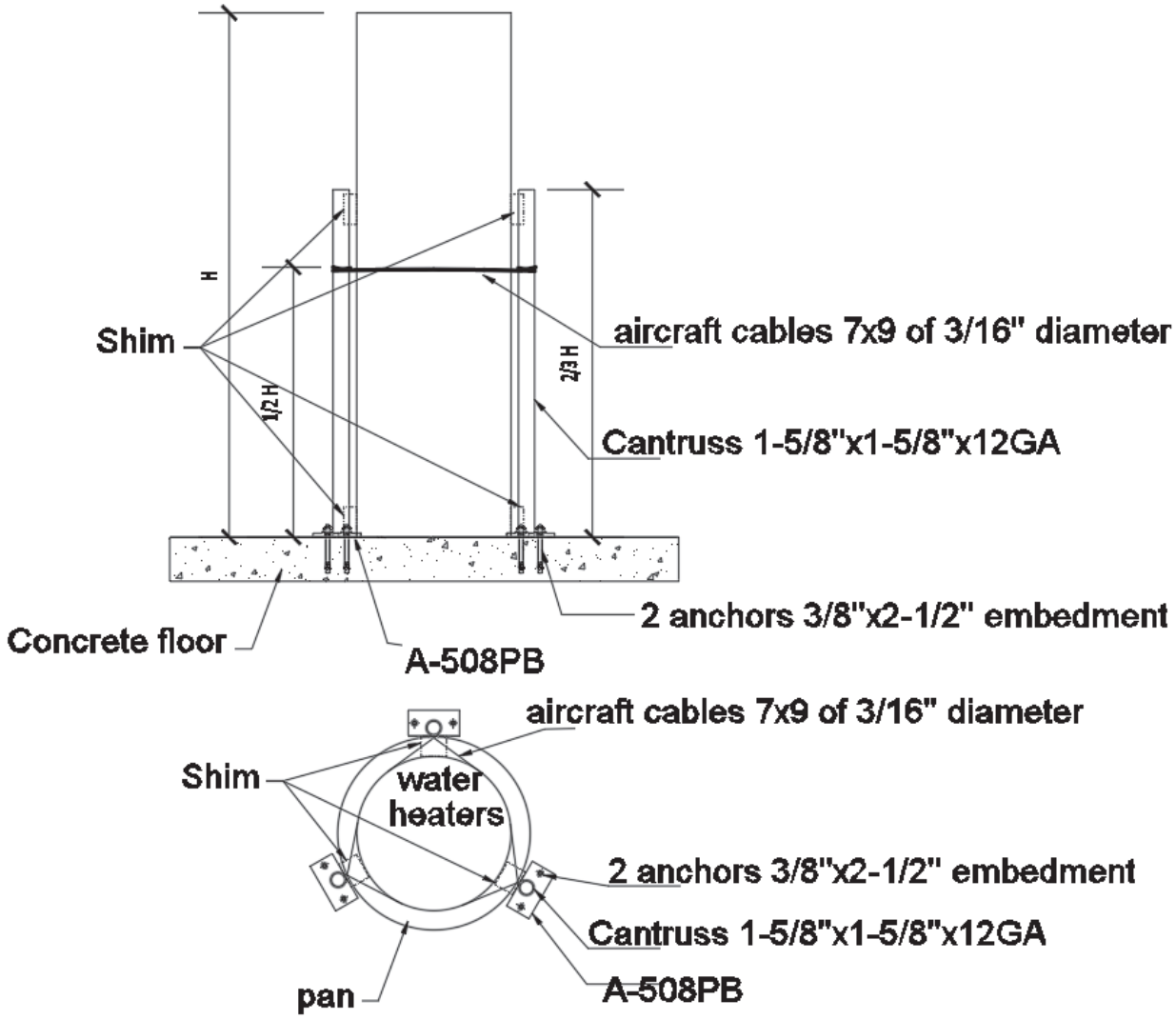

AIMCO INTERNATIONAL GROUP

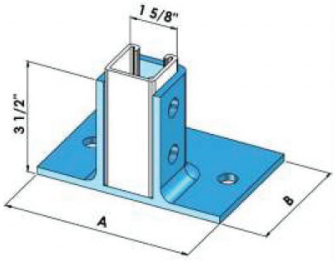

SINGLE POST BASE OPEN

Part #	A (in.)	B (in.)	Approx. Wt. (lbs.)
A-508PB	6	4	3.00
A-PB200	8	3	3.10

Specification Data	
Hole Dia. (in.)	9/16
Hole Spacing from End (in.)	13/16
Hole Spacing on Center (in.)	1 7/8
Width (in.)	1 5/8
Thickness (in.)	1/4

Shim refers to Strut channels made from 1-5/8 "X 1-5/8" X 12 GA sections that act as a blocker between the water heater and the steel pipe. The shim must be screwed to the steel pipes by a minimum of 2 metal screws of 1/4'' diameter.

5. Expansion Tanks TK-1.1 et TK-1.2 (135 pound)

A) Coefficient of the Lateral Seismic Force (CLS) and Seismic Force:

Equipment: ***Expansion tank***
Mass (pound): ***419***
Location: ***Mechanical room***

Equipment: ***Standard***
Element or Component Category: ***11B***
Element or Component Seismic Coefficient, Cp: ***1***
Response Amplification Factor, Ar: ***2,5***
Height Coefficient, Ax: ***1***
Element or Component Response Modification Coefficient, Rp: ***2,5***
Modification Factor, Sp: ***1***
Coefficient of the Lateral Seismic Force (CLS): ***0,031***

- Seismic Force:
Lateral Seismic Force = CLS* mass = **13** pound

B) Anchorages

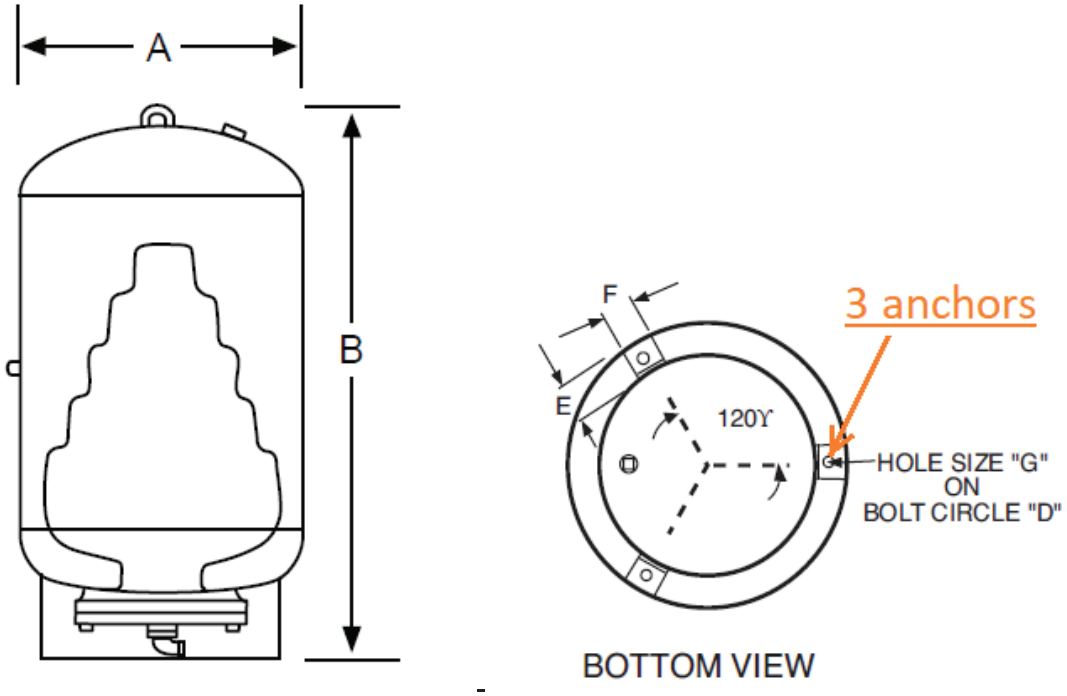

CONCLUSION:

3 seismic anchors of 3/8'' diameter X 2-1/2'' embedment.
Minimum thickness of floor: 4''
Minimum edge distance: 4''

6. Heating Boiler B.1 and B.2 (5074 pound)

A) Coefficient of the Lateral Seismic Force (CLS) and Seismic Force:

Equipment: ***Heating Boiler***
Mass (pound): ***5074***
Location: ***Mechanical room***

Equipment: ***Standard***
Element or Component Category: ***11B***
Element or Component Seismic Coefficient, Cp: ***1***
Response Amplification Factor, Ar: ***2,5***
Height Coefficient, Ax: ***1***
Element or Component Response Modification Coefficient, Rp: ***2,5***
Modification Factor, Sp: ***1***
Coefficient of the Lateral Seismic Force (CLS): ***0.031***

- Seismic Force:
Lateral Seismic Force = CLS* mass = **265** pound
- Lateral Seismic Force per support point (4 support points):
Tensile force = **0** pound
Shear force = **66** pound

B) Anchorages

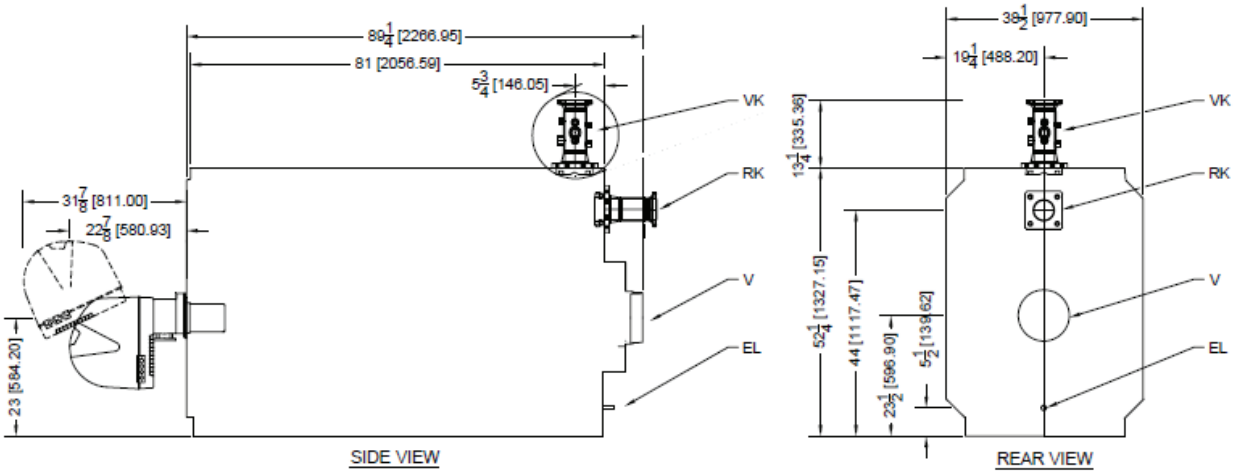

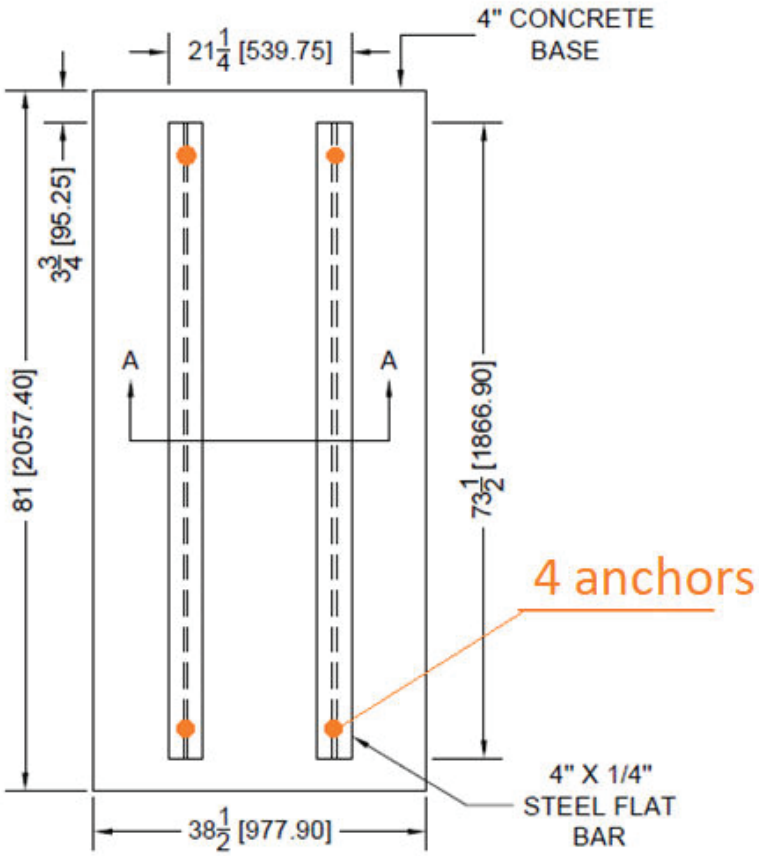

IMPORTANT: BUDERUS REQUEST A FLAT SURFACE FOR THE BOILER ASSEMBLY



VIEW A-A

FLAT BAR INSTALLATION FOR FIELD ASSEMBLY ON AN EXISTING CONCRETE BASE

CONCLUSION :

4 seismic anchors of 1/2'' diameter X 2-1/2'' embedment.
Minimum thickness of floor: 4''
Minimum edge distance: 4''

7. Air handling unit AHU-2

A) Coefficient of the Lateral Seismic Force (CLS) and Seismic Force:

Equipment: ***AHU-2***
Mass (pound): ***7370***
Location: ***Upper floor***

Equipment: ***Standard***
Element or Component Category: ***11B***
Element or Component Seismic Coefficient, Cp: ***1***
Response Amplification Factor, Ar: ***2,5***
Height Coefficient, Ax: ***2***
Element or Component Response Modification Coefficient, Rp: ***2,5***
Modification Factor, Sp: ***2***
Coefficient of the Lateral Seismic Force (CLS): ***0,063***

- Seismic Force:
Lateral Seismic Force = CLS* mass = **462** pound
- Lateral Seismic Force per support point (8 support points):
Tensile force = **0** pound
Shear force = **57** pound

B) Anchorages

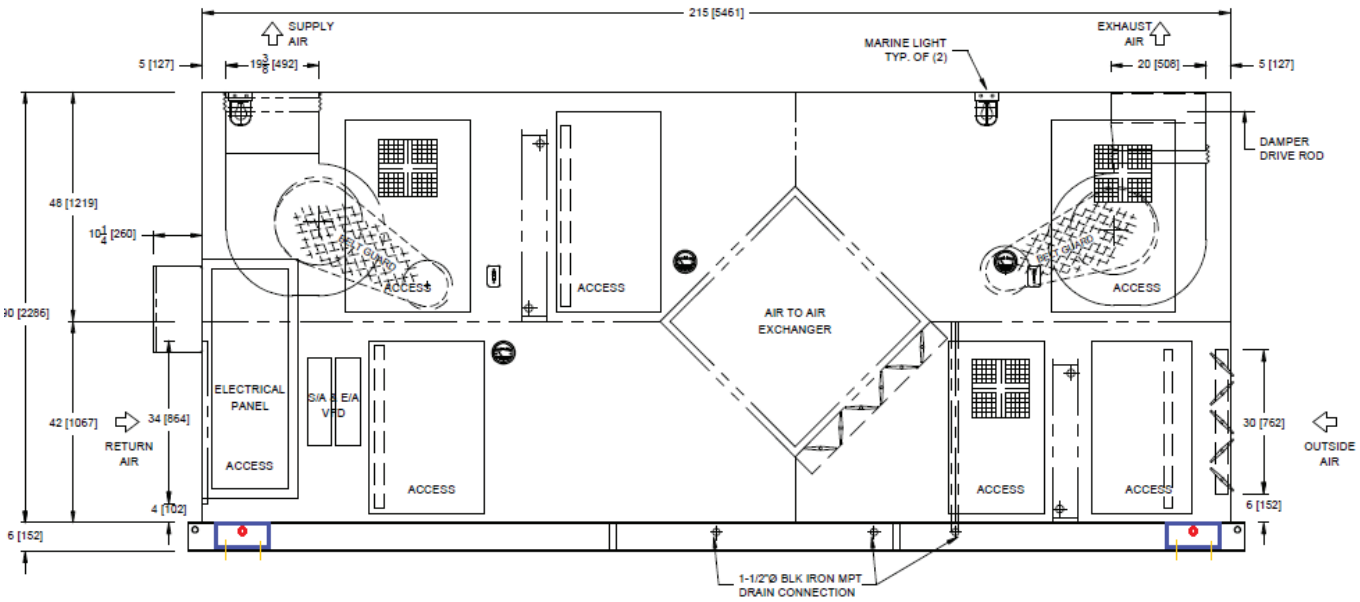

Elevation

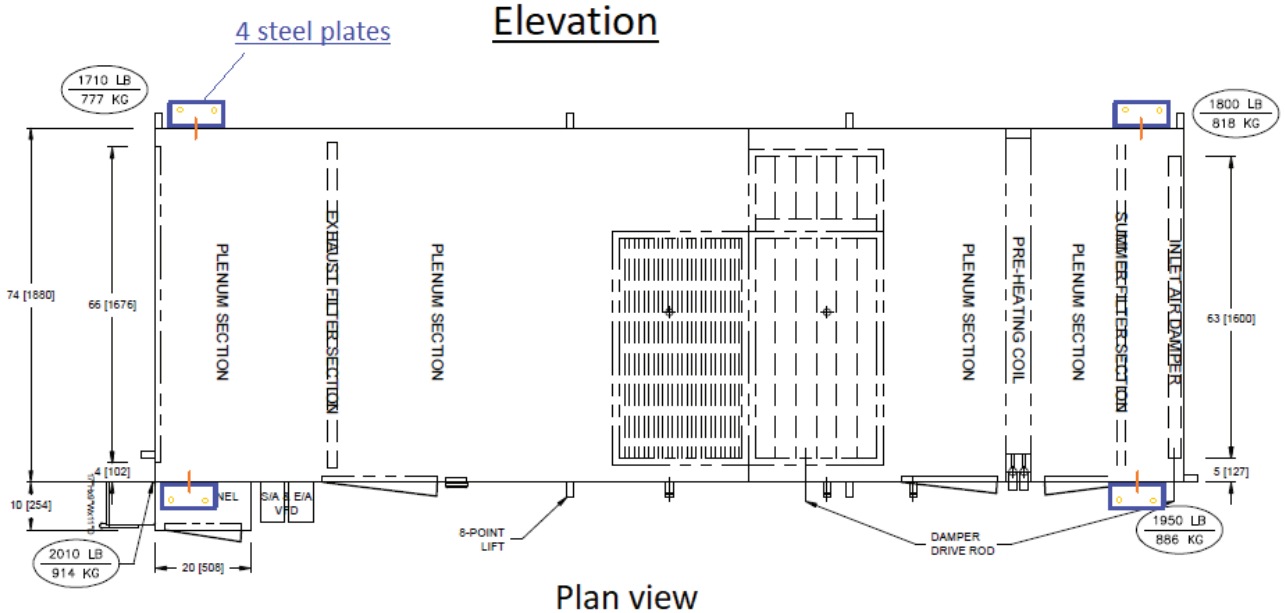

Plan view

- The AHU2 is to be installed on an existing steel structure.

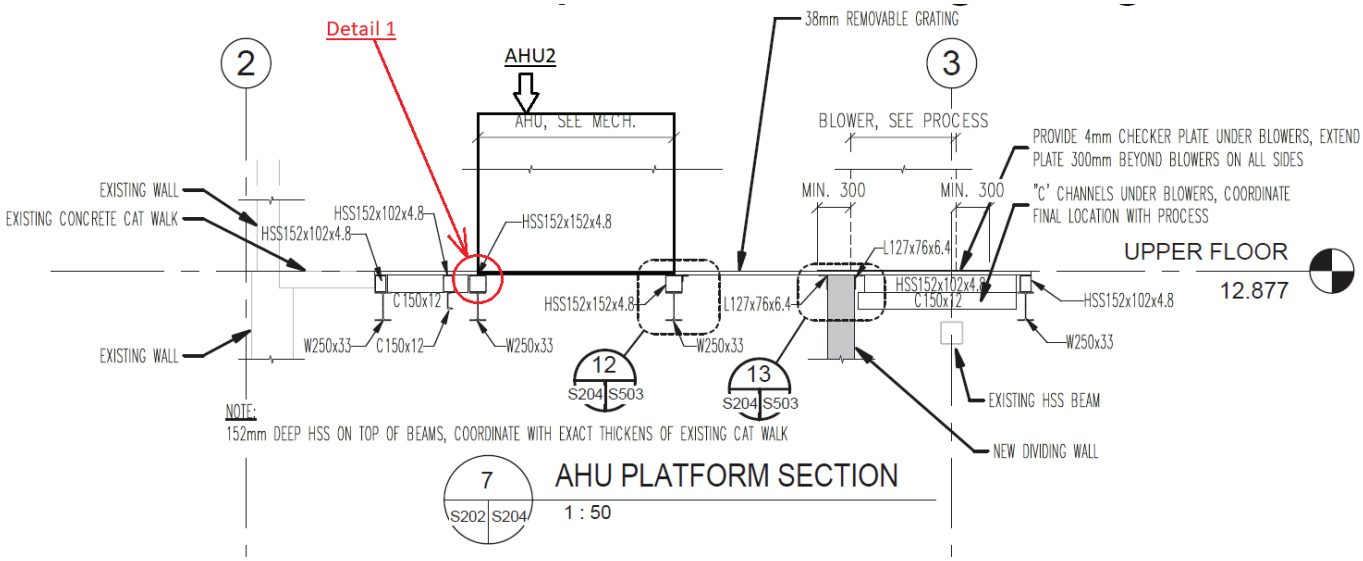

- Detail 1:

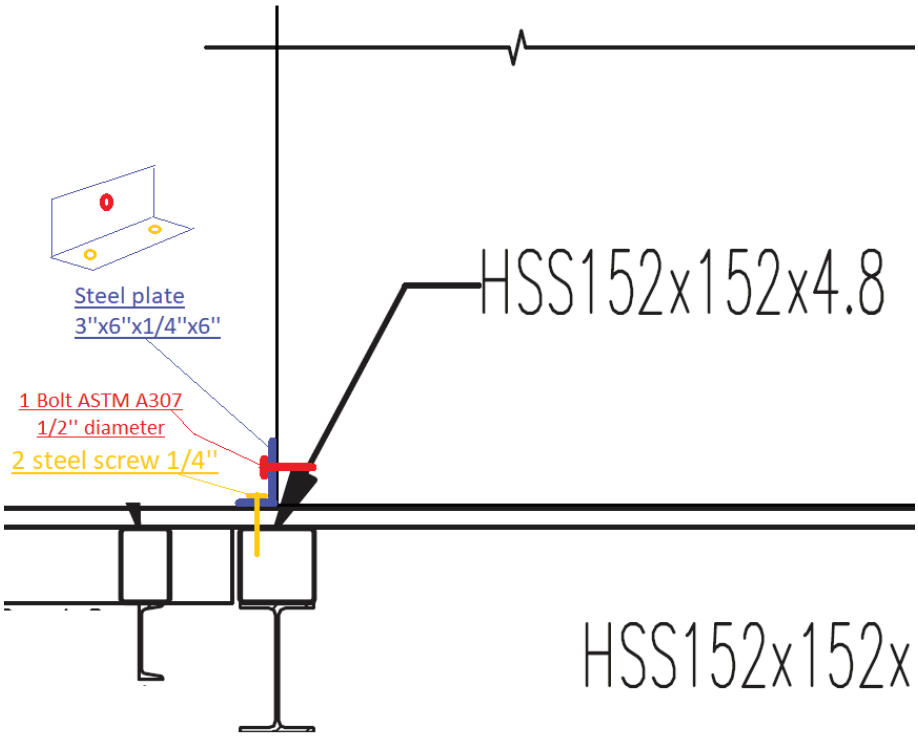

8. Fans CF-1 et CF-2; CFS=0.211; Maximum mass: 79 pound

Suspension system:
The fans need to be attached to the steel structure:
+ 4 threaded rods 3/8'' with rod stiffeners
+ 4 aircraft cables in 45 degrees 7x19 of 1/8'' diameter

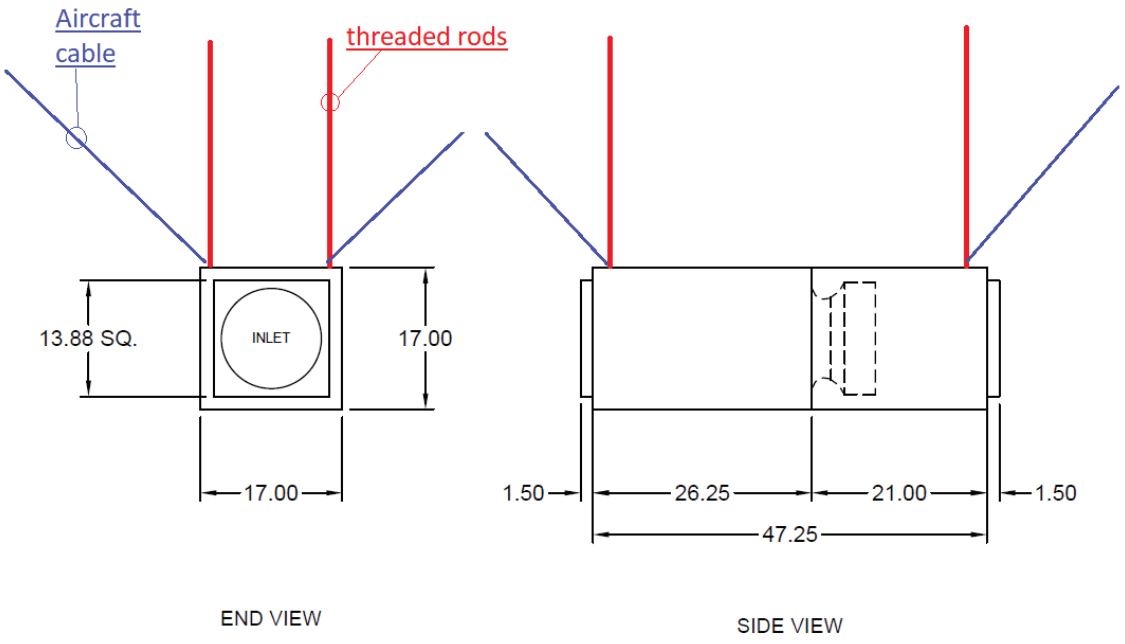

9. Heat recovery ventilator HRV-1; CLS=0.094; maximum mass: 65 pound
Seismic installation is not required. Follow the manufacturer's recommendations for installation.

10. Oil pumps P-4.1 and P-4.2; CLS=0.094; maximum mass: 100 pound (to be confirmed by contractor)
Secure the pump to the wall (in the metal studs) with 4 metal screws of 1/4'' diameter.

11. Brazed plate heat exchanger HEX-3.1 and HEX-3.2; CLS=0.094; maximum mass: 42 pound
Seismic installation is not required. Follow the manufacturer's recommendations for installation.

12. Tank of HVAC water treament systems; CLS=0.094; maximum mass: 460 pound

Diameter: 24'' ; Hight: 49'' ; Capacity: 208 Liters

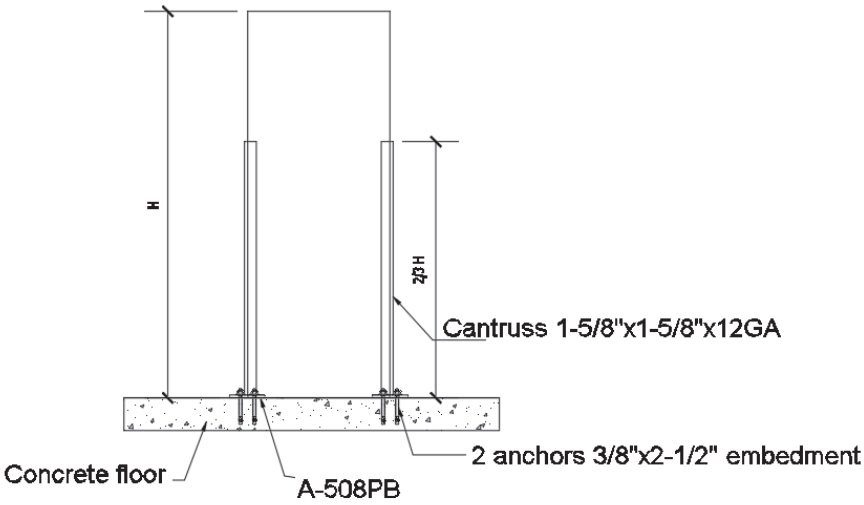



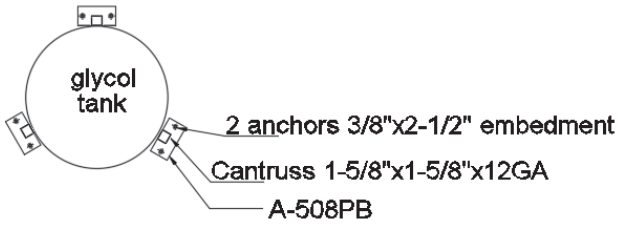

AIMCO INTERNATIONAL GROUP

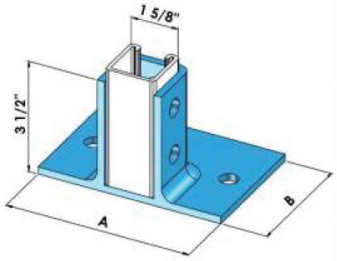

SINGLE POST BASE OPEN

Part #	A (in.)	B (in.)	Approx. Wt. (lbs.)
A-508PB	6	4	3.00
A-PB200	8	3	3.10

Specification Data	
Hole Dia. (in.)	9/16
Hole Spacing from End (in.)	13/16
Hole Spacing on Center (in.)	1 7/8
Width (in.)	1 5/8
Thickness (in.)	1/4

13. Suspended air seperator; CLS=0.094; maximum mass: 121 pound

Suspension system:

The unit needs to be attached to the steel structure:
+ 2 threaded rods 3/8'' with rod stiffeners
+ 4 aircraft cables in 45 degrees 7x19 of 1/8'' diameter

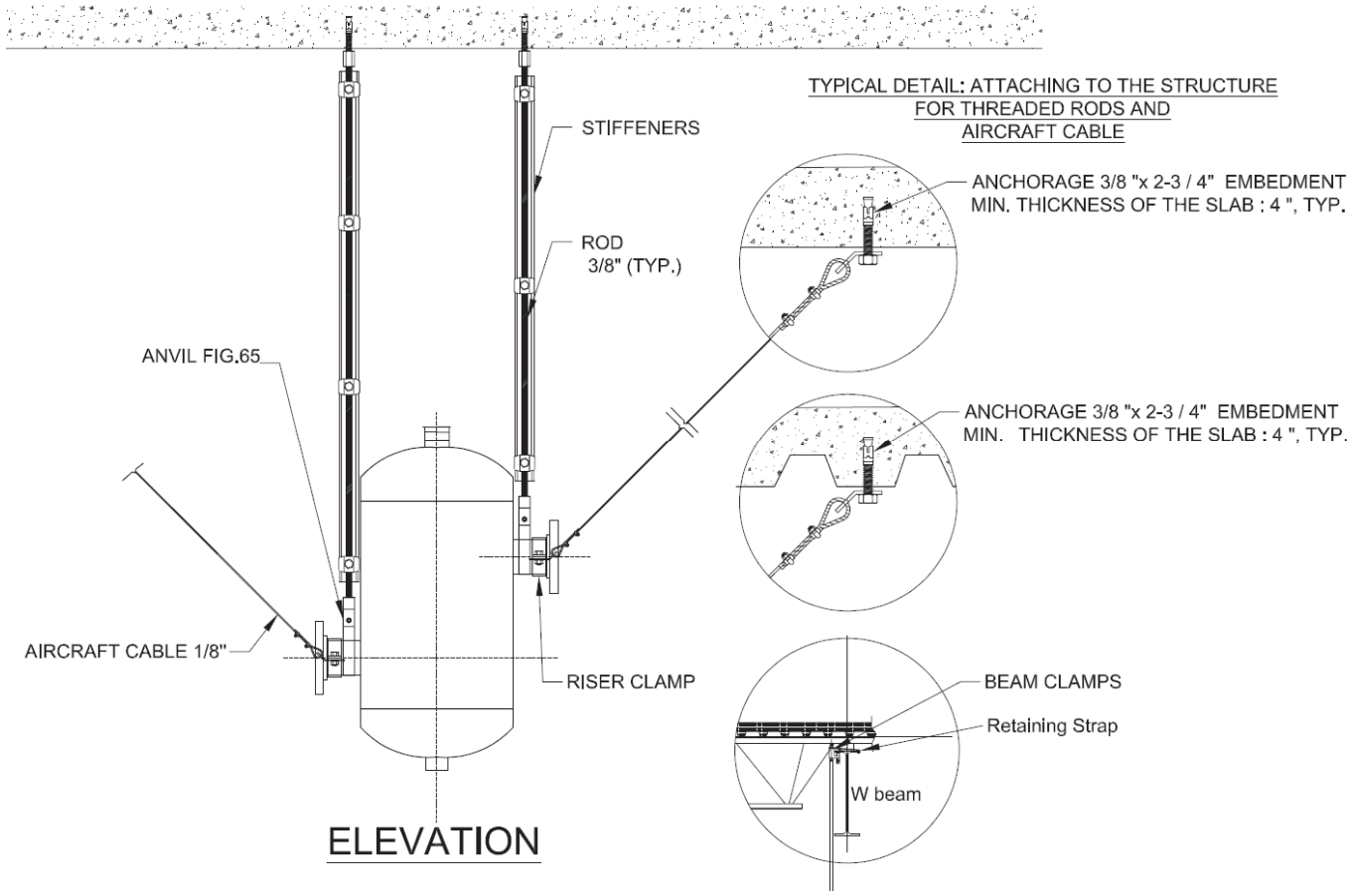

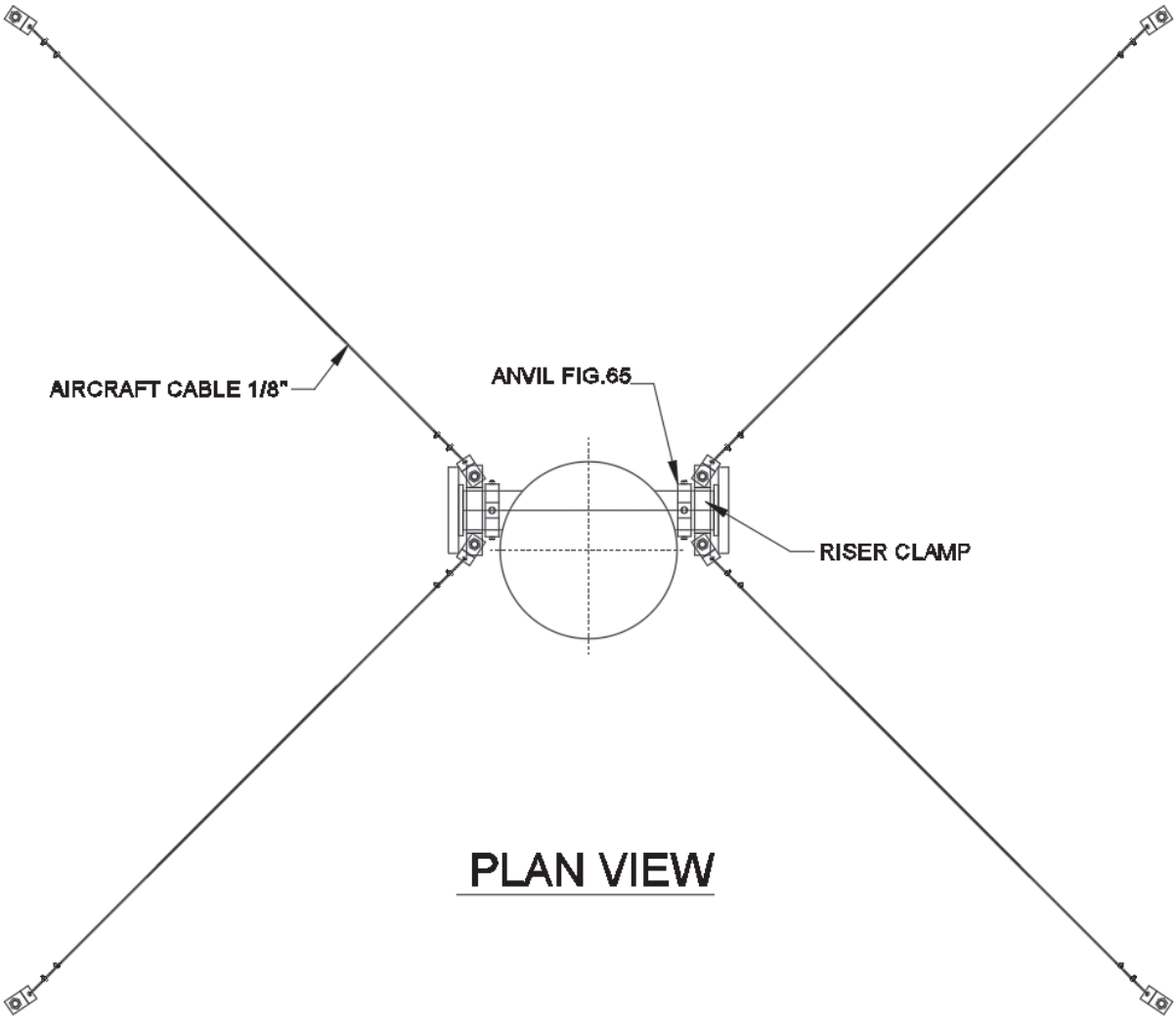

PLAN VIEW

PART 4: GENERAL NOTES FOR CABLE AND ROD STIFFENER INSTALLATION

1. *Plates and cable installation*



Type of steel: 44W

- Cable plates must be bended in 45 degrees.
- Cable plates must have a minimum of ¼ '' of thickness.
- Cable plates must be installed in the beginning of the threaded rods for seismic restraint and also installed to the concrete slab for restraint and anchorage.

2. *Cable U-bolts required installation*

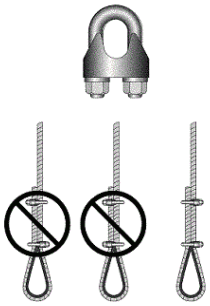

2 serres-câbles minimum par câbles par extrémités et doivent être installé de la façon suivante :

- A minimum of 2 u-bolts are required and must be installed as per above image

3. *Cable protectors*



- Cable protectors must be installed every time a cable passes through a cable plate

4. Notes on rod stiffeners



Attachment type 1:



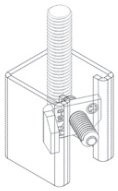

Attachment type 2:



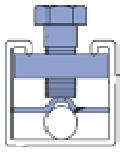

- Rod stiffeners must be installed on threaded rods only where seismic restraints are required and when rod length is 16'' or more for a 3/8'' rod.
- Rod stiffeners are made of a strut channel 1'' 5/8 X 1'' 5/8
- A minimum of 3 attachment are required in a rod stiffener even if the rod length is only 16''
- The first and the last attachment must begin at 2'' of the bottom and the top of the strut channel
- The spacing between attachments for a 3/8'' rod is 13''

Type of bolts: ASTM A307

PART 5: SEISMIC ANCHORS

1. ***Seismic Anchor list***

1- Simpson Strong-Tie model : Strong-bolt 2 ou Titen HD.
2- Powers Fasteners model : Power-Stud + SD2 ou Wedge-Bolt +.
3- Hilti model : Kwik Bolt TZ ou Kwik HUS-EZ mâle.
4- ITW Red-Head model : Trubolt +
5- Wej-it fastening systems Systems model : ANKR-Tite CCAT.

** Please contact us before using any other seismic anchor for verification and validation.

Seismic male screw anchor :

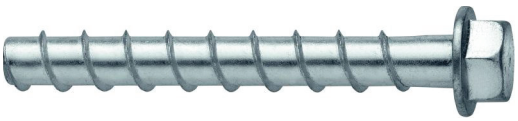

Seismic female screw anchor for threaded rod only:



Seismic expansion anchor :



Mécanique Nordique
Plumbing
Heating
Ventillation
mecanique.nordique@hotmail.com
1255 Rue J.A.Bombardier Lévis QC G7A 2P4
Tél : (418) 496-1109 Fax : (418) 496-3803

REVIEWED BY CONTRACTOR
Kudlik Construction Ltd.
NAME: Sandra Rousseau P.Eng
DATE: Aoû 21, 2018

IQUALUIT WWTP UPGRADES

DRAWING FOR APPROVAL

ENGINEER: **NUNAMI STANTEC LIMITED**

DRAWING #: AD-034

Section	:	23 25 00
Article	:	2.2
Plans	:	
Application	:	HW GLYCOL
Brand	:	DOW FROST HD
Model	:	50/50
Revised #	:	
Supplyer	:	PRODUIT CHIMIQUE ANCO
Date	:	**20/08/2018**
By	:	Martin Boucher

STANTEC PROJECT #: 110126045
SUBMITTAL # AD-034

This review by Stantec is for general conformance with the design concept of Stantec's design of the:
☐ Architectural ☐ Electrical
☐ Structural ☐ Other
☑ Mechanical

component(s) only and does not mean that Stantec has verified or approves the shop drawing(s). The Contractor remains solely responsible for the shop drawing(s) and this review by Stantec does not relieve the Contractor of the Contractor's responsibility for errors or omissions in the shop drawing(s) or for meeting all requirements of the contract documents. This review does not mean that Stantec approves the detailed design inherent in the shop drawing, responsibility for which shall remain with the Contractor submitting same, nor does this review mean that Stantec accepts any deviation of the shop drawing(s) from the contract documents. The Contractor is responsible for confirming all dimensions and correlating them at the job site, for all construction means, methods and techniques, and for coordination of construction work of all trades, including coordination of all shop drawings.

Stantec

☑ REVIEWED
☐ REVIEWED, AS NOTED
☐ REVISE AND RESUBMIT
☐ NOT REVIEWED

DATE 2018-08-27
BY Brendan Zrum, P.Eng

DOWFROST HD

Inhibited Propylene Glycol-based Heat Transfer Fluid

DOWFROST* HD heat transfer fluid is a formulation of 94.0 percent propylene glycol and a specially designed package of industrial corrosion inhibitors. The fluid is dyed bright yellow to aid in leak detection. Solutions in water provide freeze protection to below -50°C (-60°F) and burst protection to below -73°C (-100°F).

Recommended use temperature range: -45°C (-50°F) to 160°C (325°F)

Suitable applications: single fluid process heating and cooling, closed-loop, water-based HVAC applications where propylene glycol solutions are preferred or required.

For health and safety information for this product, contact your Dow sales representative or call the number for your area on the second page of this sheet for a Material Safety Data Sheet (MSDS).

Typical Concentrations of DOWFROST HD Fluid Required to Provide Freeze and Burst Protection at Various Temperatures

Temperature °C (°F)	Percent DOWFROST HD Fluid Concentration Required	
	For Freeze Protection Volume %	For Burst Protection Volume %
-7 (20)	18	12
-12 (10)	29	20
-18 (0)	36	24
-23 (-10)	42	28
-29 (-20)	46	30
-34 (-30)	50	33
-40 (-40)	54	35
-46 (-50)	57	35
-51 (-60)	60	35

NOTE: These figures are examples only and may not be appropriate to your situation. Generally, for an extended margin of protection, you should select a temperature in this table that is at least 3°C (5°F) lower than the expected lowest ambient temperature. Inhibitor levels should be adjusted for solutions of less than 20% glycol. Contact Dow for information on specific cases or further assistance.
ATTENTION: These are typical numbers only and are not to be regarded as specifications. As use conditions are not within its control, Dow does not guarantee results from use of the information or products herein; and gives no warranty, express or implied.

Typical Freezing and Boiling Points of DOWFROST HD Fluid†

Wt. % Propylene Glycol	Vol. % Propylene Glycol	Wt. % DOWFROST HD	Vol. % DOWFROST HD	Freezing Point °C (°F)	Boiling Point °C @ 101 kPa (°F@ 760 mmHg)	Degree Brix††	Refractive Index 22°C (72°F)
0.0	0.0	0.0	0.0	0 (32.0)	100.0 (212)	0.0	1.3328
5.0	4.8	5.3	5.1	-1.6 (29.1)	100.0 (212)	4.8	1.3383
10.0	9.6	10.7	10.2	-3.3 (26.1)	100.0 (212)	8.4	1.3438
15.0	14.5	16.0	15.4	-5.1 (22.9)	100.0 (212)	12.9	1.3495
20.0	19.4	21.3	20.6	-7.1 (19.2)	100.6 (213)	15.4	1.3555
25.0	24.4	26.6	26.0	-9.6 (14.7)	101.1 (214)	19.0	1.3615
30.0	29.4	31.9	31.3	-12.7 (9.2)	102.2 (216)	22.0	1.3675
35.0	34.4	37.2	36.6	-16.4 (2.4)	102.8 (217)	26.1	1.3733
40.0	39.6	42.6	42.1	-21.1 (-6.0)	103.9 (219)	29.1	1.3790
45.0	44.7	47.9	47.6	-26.7 (-16.1)	104.4 (220)	31.8	1.3847
50.0	49.9	53.2	53.1	-33.5 (-28.3)	105.6 (222)	34.7	1.3903
55.0	55.0	58.5	58.5	-41.6 (-42.8)	106.1 (223)	38.0	1.3956
60.0	60.0	63.8	63.8	-51.1 (-59.9)	107.2 (225)	40.6	1.4008
65.0	65.0	69.1	69.1	b	108.3 (227)	42.1	1.4058
70.0	70.0	74.5	74.5	b	110.0 (230)	44.1	1.4104
75.0	75.0	79.8	79.8	b	113.9 (237)	46.1	1.4150
80.0	80.0	85.1	85.1	b	118.3 (245)	48.0	1.4193
85.0	85.0	90.4	90.4	b	125.0 (257)	50.0	1.4235
90.0	90.0	95.7	95.7	b	132.2 (270)	51.4	1.4275
95.0	95.0	a	a	b	154.4 (310)	52.8	1.4315

† Typical properties, not to be construed as specifications.

†† Degree Brix is a measure of the sugar concentration in a fluid and is important in fermentation and syrups applications. Although there is no sugar present in DOWFROST heat transfer fluids, the glycol affects the refractive index of the fluid in a similar fashion.

[a] Propylene glycol concentrations greater than 94% are not attainable with DOWFROST HD fluid.

[b] Freezing points are below -50°C (-60°F).

NOTE: Generally, for an extended margin of protection, you should select a temperature in this table that is at least 3°C (5°F) lower than the expected lowest ambient temperature. Inhibitor levels should be adjusted for solutions of less than 20% glycol. Contact Dow for information on specific cases or further assistance.

*Trademark of The Dow Chemical Company

DOWFROST HD
Inhibited Propylene Glycol-based Heat Transfer Fluid

Typical Properties of DOWFROST HD Fluid†

	DOWFROST HD Heat Transfer Fluid
Composition (% by weight)	
Propylene Glycol	94
Performance Additives	6
Color	Fluorescent Yellow
Specific Gravity 15/15°C (60/60°F)	1.053–1.063
pH of Solution (50% glycol)	9.5–10.5
Reserve Alkalinity (min.)	15.0 ml

†Typical properties, not to be construed as specifications. Complete sales specifications are available on request.

Saturation Properties of DOWFROST HD Fluid at 30% Propylene Glycol Concentration by Volume

Temp. °C	(°F)	Specific Heat kJ/(kg)(K) (Btu/lb°F)	Density kg/m³ (lb/ft³)	Therm. Cond. W/mK [Btu/hr ft² (°F/ft)]	Viscosity mPa·s (cps)
10	(50)	3.756 (0.898)	1043.85 (65.17)	0.4344 (0.2510)	4.5068 (4.51)
40	(104)	3.841 (0.918)	1029.85 (64.29)	0.4622 (0.2670)	1.6295 (1.63)
65	(149)	3.913 (0.935)	1014.87 (63.36)	0.4771 (0.2757)	0.9144 (0.91)
90	(194)	3.984 (0.952)	996.86 (62.23)	0.4846 (0.2800)	0.6040 (0.60)
120	(248)	4.070 (0.973)	971.26 (60.63)	0.4838 (0.2795)	0.4246 (0.42)

Saturation Properties of DOWFROST HD Fluid at 40% Propylene Glycol Concentration by Volume

Temp. °C	(°F)	Specific Heat kJ/(kg)(K) (Btu/lb°F)	Density kg/m³ (lb/ft³)	Therm. Cond. W/mK [Btu/hr ft² (°F/ft)]	Viscosity mPa·s (cps)
-20	(-4)	3.453 (0.825)	1066.76 (66.60)	0.3635 (0.2100)	48.9043 (48.90)
10	(50)	3.564 (0.852)	1055.38 (65.89)	0.3936 (0.2274)	7.2173 (7.22)
40	(104)	3.675 (0.878)	1039.77 (64.91)	0.4150 (0.2398)	2.2389 (2.24)
65	(149)	3.767 (0.900)	1023.55 (63.90)	0.4262 (0.2463)	1.1762 (1.18)
90	(194)	3.859 (0.922)	1004.39 (62.70)	0.4313 (0.2492)	0.7462 (0.75)
120	(248)	3.970 (0.949)	977.53 (61.03)	0.4294 (0.2481)	0.5084 (0.51)

Saturation Properties of DOWFROST HD Fluid at 50% Propylene Glycol Concentration by Volume

Temp. °C	(°F)	Specific Heat kJ/(kg)(K) (Btu/lb°F)	Density kg/m³ (lb/ft³)	Therm. Cond. W/mK [Btu/hr ft² (°F/ft)]	Viscosity mPa·s (cps)
-30	(-22)	3.165 (0.756)	1081.98 (67.55)	0.3246 (0.1875)	172.8273 (172.83)
-20	(-4)	3.210 (0.767)	1078.51 (67.33)	0.3336 (0.1927)	73.0193 (73.02)
10	(50)	3.346 (0.800)	1065.40 (66.51)	0.3560 (0.2057)	10.6481 (10.65)
40	(104)	3.481 (0.832)	1048.23 (65.44)	0.3716 (0.2147)	3.1103 (3.11)
65	(149)	3.594 (0.859)	1030.83 (64.35)	0.3792 (0.2191)	1.5483 (1.55)
90	(194)	3.707 (0.886)	1010.61 (63.09)	0.3821 (0.2208)	0.9339 (0.93)
120	(248)	3.843 (0.919)	982.63 (61.34)	0.3792 (0.2191)	0.6029 (0.60)

For further information, call...

In the United States and Canada: 1-800-447-4369 • FAX: 1-989-832-1465

In Europe: +32 3 450 2240 • FAX: +32 3 450 2815

In the Pacific: +886 22 547 8731 • FAX: +886 22 713 0092

In other Global Areas: 1-989-832-1560 • FAX: 1-989-832-1465

www.dowfrost.com

NOTICE: No freedom from any patent owned by Seller or others is to be inferred. Because use conditions and applicable laws may differ from one location to another and may change with time, Customer is responsible for determining whether products and the information in this document are appropriate for Customer's use and for ensuring that Customer's workplace and disposal practices are in compliance with applicable laws and other governmental enactments. Seller assumes no obligation or liability for the information in this document. NO WARRANTIES ARE GIVEN; ALL IMPLIED WARRANTIES OF MERCHANTABILITY OR FITNESS FOR A PARTICULAR PURPOSE ARE EXPRESSLY EXCLUDED.

Published November 2001

Printed in U.S.A.

*Trademark of The Dow Chemical Company

NA/LA/Pacific: Form No. 180-01315-1101 AMS

REVIEWED BY CONTRACTOR

Kudlik Construction Ltd.

NAME: Sandra Rousseau P.Eng

DATE: Aug 31, 2018

Mécanique Nordique Plumbing Heating Ventillation

mecanique.nordique@hotmail.com

1255 Rue J.A.Bombardier
Lévis, Québec
G7A 2P4
Téléphone: 418-496-1109
Télécopieur: 418-496-3803

IQALUIT WWTP UPGRADE

DRAWING FOR APPROVAL

Ingineer : NUNAMI STANTEC

DRAWING #: AD-035

Section	PLAN
Article	SCHEDULE
Plans	M802
Application	: TK-3.2
Brand	: THERM-X TROL
Model	: ST-8
Revised #	:
Supplyer	: Wolseley

STANTEC PROJECT #: 110126045

SUBMITTAL # AD-035

This review by Stantec is for general conformance with the design concept of Stantec's design of the:

☐ Architectural ☐ Electrical
☐ Structural ☐ Other
☑ Mechanical

component(s) only and does not mean that Stantec has verified or approves the shop drawing(s). The Contractor remains solely responsible for the shop drawing(s) and this review by Stantec does not relieve the Contractor of the Contractor's responsibility for errors or omissions in the shop drawing(s) or for meeting all requirements of the contract documents. This review does not mean that Stantec approves the detailed design inherent in the shop drawing, responsibility for which shall remain with the Contractor submitting same, nor does this review mean that Stantec accepts any deviation of the shop drawing(s) from the contract documents. The Contractor is responsible for confirming all dimensions and correlating them at the job site, for all construction means, methods and techniques, and for coordination of construction work of all trades, including coordination of all shop drawings.

Stantec

☑ REVIEWED

☐ REVIEWED, AS NOTED

☐ REVISE AND RESUBMIT

☐ NOT REVIEWED

DATE 2018-08-31

BY Brendan Zrum, P.Eng

Pages incl.	2
Date	: **31-08-2018**
By	: **Mécanique Nordique Inc.**

Non-ASME THERM-X-TROL®

General Usage

- Residential Water Heaters
- Office Buildings
- Apartment Buildings
- Dormitories
- Elderly Housing
- Extended Care Facilities
- Condominiums/Multiple Residential
- Food Service
- Laundromats
- Hospitals
- Other General-Use Hot Water Systems

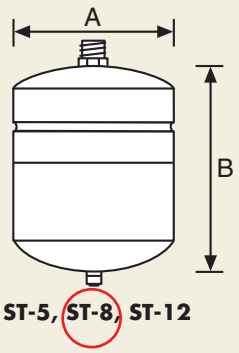

ST-5, ST-8, ST-12

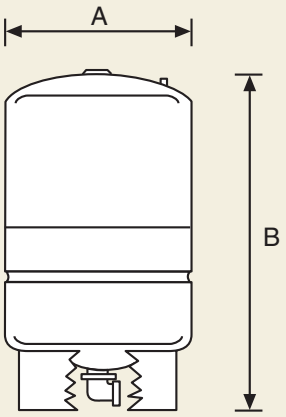

ST-25V through ST-210V

THERM-X-TROL Non-ASME Specifications

Model No.	Total Volume (Gals.)	Max. Acceptance Factor	Diameter (A)	Height (B)	System Connection	Ship Weight (lbs.)
ST-5	2.0	.45	8″	12 5/8″	3/4″ NPT	5
ST-8	3.2	.59	9″	15″	3/4″ NPT	7
ST-12	4.4	.73	11″	15″	3/4″ NPT	9
ST-25V	10.3	1.0	15 3/8″	19 1/4″	3/4″ NPT	23
ST-30V	14.0	.81	15 3/8″	23 7/8″	3/4″ NPT	25
ST-42V	20.0	.57	15 3/8″	31 5/8″	3/4″ NPT	33
ST-60V	34.0	1.00	22″	29 5/8″	1 1/4″ NPT	61
ST-80V	44.0	.77	22″	36″	1 1/4″ NPT	69
ST-180V	62.0	.55	22″	46 3/4″	1 1/4″ NPT	92
ST-200V	81.0	.41	22″	56 3/8″	1 1/4″ NPT	103
ST-210V	86.0	.54	26″	47 1/4″	1 1/4″ NPT	123
ST-451	158.0	.65	73 1/4″	30″	2″ NPT	508
ST-452	211.0	.65	91″	30″	2″ NPT	760
ST-453	264.0	.65	85 5/8″	36″	3″ NPT	810
ST-454	317.0	.65	98″	36″	3″ NPT	914
ST-455	370.0	.65	110 3/8″	36″	3″ NPT	1,018
ST-456	422.0	.65	81 7/8″	48″	3″ NPT	1,655
ST-457	528.0	.65	97 1/4″	48″	3″ NPT	1,925

Maximum Working Pressure: 150 PSI. All Models listed by NSF/ANSI 61® (excluding ST-451 – ST-457);
Maximum Allowable Working Temperature: ST-5 through ST-210V: 200°F; ST-451 through ST-457: 240°F;
Standard Factory Precharge: 40 PSIG (ST-5 – ST-210V); 55 PSIG (ST-451 – ST-457)

REVIEWED BY CONTRACTOR

Kudlik Construction Ltd.

NAME: Sandra Rousseau P.Eng

DATE: Déc 04, 2018

Mécanique Nordique Plumbing Heating Ventillation

mecanique.nordique@hotmail.com

1255 Rue J.A.Bombardier
Lévis, Québec
G7A 2P4
Téléphone: 418-496-1109
Télécopieur: 418-496-3803

IQALUIT WWTP UPGRADE

DRAWING FOR APPROVAL

Ingineer : NUNAMI STANTEC

DRAWING #: AD-036R

Section	:	25 10 02 25 30 01 25 30 02 25 90 00 25 90 02
Article	:	
Plans	:	All
Application	:	Building Controls System
Brand	:	Johnson Controls
Model	:	
Revised #	:	
Supplyer	:	Johnson Controls
Pages incl.		218
Date	:	**2018-12-04**
By	:	**Mécanique Nordique Inc.**

STANTEC PROJECT #: 110126045

SUBMITTAL # AD-036R

This review by Stantec is for general conformance with the design concept of Stantec's design of the:

- ☐ Architectural
- ☐ Structural
- ☑ Mechanical
- ☐ Electrical
- ☐ Other

component(s) only and does not mean that Stantec has verified or approves the shop drawing(s). The Contractor remains solely responsible for the shop drawing(s) and this review by Stantec does not relieve the Contractor of the Contractor's responsibility for errors or omissions in the shop drawing(s) or for meeting all requirements of the contract documents. This review does not mean that Stantec approves the detailed design inherent in the shop drawing, responsibility for which shall remain with the Contractor submitting same, nor does this review mean that Stantec accepts any deviation of the shop drawing(s) from the contract documents. The Contractor is responsible for confirming all dimensions and correlating them at the job site, for all construction means, methods and techniques, and for coordination of construction work of all trades, including coordination of all shop drawings.

Stantec

- ☐ REVIEWED
- ☑ REVIEWED, AS NOTED
- ☐ REVISE AND RESUBMIT
- ☐ NOT REVIEWED

DATE 2018-12-21

BY Brendan Zrum, P.Eng

This stamp applies to all items in this package EXCEPT for the control valve schedule.

Johnson Controls Ltd.
1375 Rue Frank-Carrel
Ville de Québec, QC G1N 2E7
Tel. 418-681-7958

TRANSMITTAL LETTER

TO:	Mecanique Nordique	Date:	October 11, 2018
	9257-6131 Quebec Inc.	Project Name:	Iqualuit Waste Water Treatment Plant Upgrade
	1255 Rue J.A. Bombardier	Project #:	8N0Y-0079
	Levis, QC G7A 2P4	Customer PO#:	

We are sending you: ☒ **Enclosed/Attached** ☐ **Under Separate Cover**

☐ Shop Drawings	☒ Product Data Sheets	☐ Copy of Letter
☐ Plans	☐ Copy of Letter	☒ Submittals
☐ Specifications	☐ Samples	☐ Operations & Maint. Manuals
☐ Damper Schedules	☐ Room Schedules	☐ Device Schedules
☒ Valve Schedules	☐ Door Schedules	☐

This material/information is being sent:

☐ Per your Request.	☐ For your Record and File	☐ For Correction & Resubmittal.
☒ For your Review and Approval.	☐ Approved as Submitted.	☐ For issue to Subcontractors.
☐ For your Review and Comment.	☐ Approved as Noted.	☐ Final Distributions
☐	☐	☐

We have detailed these Submittals based on our interpretation of the contract drawings & specifications

☒ Return 1 Approved Copy
☐ Fabrication Held for Approval & Written Release
☐ Equipment is being fabricated and any changes may create a delay in shipment and a possible increase in price.

Please have your detailing department look carefully at the attached submittals. We cannot be held responsible for any cost or lead time changes incurred for modifications once the equipment has been released for fabrication.

Item	Description / Comments	Document # / Ref	Rev	# of Sets
1	Iqualuit Waste Water Treatment Plant Upgrade: HW Submittal	8N0Y-0079	01	01
2	Iqualuit Waste Water Treatment Plant Upgrade: Re-Submittal	8N0Y-0079	02	01
3				
4				
5				
6				

Message/Comments:

Delivered by: Date: 10/11/2018

Received by: Date: 10/11/2018

CC to:	# of Copies

TRANSMITTED BY:
Philippe Cernosek
Project Manager

Date: October 11, 2018

BUILDING AUTOMATION SYSTEM

RE-SUBMITTAL

IQUALUIT WASTE WATER TREATMENT PLANT UPGRADE

Submitted To:
Mecanique Nordique
9257-6131 Quebec Inc.
1255 Rue J.A. Bombardier
Levis, QC G7A 2P4

Submitted By:
Philippe Cernosek
Project Manager

JCI Contract: 8N0Y-0079

Johnson Controls Ltd.
1375 Rue Frank-Carrel
Ville de Québec, QC G1N 2E7
Tel: 418-681-7958
Fax:

STAMPS

Iqualuit Waste Water Treatment Plant Upgrades

8N0Y-0079

DRAWING INDEX	
Drawing	Description
001.001	Network Riser Diagram
002.001	Heating Water System Flow Diagram
002.002	Heating Water System Sequence of Operation
002.003	Heating Water System Hardware Schedule
002.004	Heating Water System Wiring Details
003.001	Water Supply & Recirculation System Flow Diagram
003.002	Water Supply & Recirculation System Hardware Schedule & Wiring Details
004.001	Domestic Hot Water System Flow Diagram
004.002	Domestic Hot Water System Hardware Schedule & Wiring Details
005.001	Fuel Tank System Flow Diagram
005.002	Fuel Tank System Hardware Schedule & Wiring Details
006.001	AHU-2 Flow Diagram
006.002	AHU-2 Sequence of Operation
006.003	AHU-2 Wiring Diagram
006.004	AHU-2 Hardware Schedule
006.005	AHU-2 Wiring Details
006.006	AHU-3 Flow Diagram
006.007	AHU-3 Sequence of Operation
006.008	AHU-3 Hardware Schedule
006.009	AHU-3 Wiring Details
007.001	Mechanical Room Cooling CF-1 Flow Diagram
007.002	Mechanical Room Cooling CF-1 Hardware Schedule
007.003	Mechanical Room Cooling CF-1 Wiring Details
007.004	Electrical Room Cooling CF-2 Flow Diagram
007.005	Electrical Room Cooling CF-2 Hardware Schedule & Wiring Details

DRAWING INDEX	
Drawing	Description
008.001	Generator Room Ventilation Flow Diagram
008.002	Generator Room Ventilation Hardware Schedule & Wiring Details
009.001	HRV-1 Flow Diagram
009.002	HRV-1 Hardware Schedule & Wiring Details
010.001	UH Flow Diagram
010.002	UH W/Process Blower Flow Diagram
010.003	UH With Process Blowers Hardware Schedule & Wiring Details
010.004	Perimeter Heating Flow Diagram
011.001	Sump Pump Flow Diagram
011.002	Building Low Temperature Alarm Flow Diagram
011.003	Miscellaneous System Flow Diagram
011.004	Miscellaneous System Hardware Schedule & Wiring Details
012.001	Panel EN-1 Layout
012.002	Panel EN-2 Layout
012.003	Panel EN-3 Layout
012.004	Panel EN-4 Layout
012.005	Panel EN-5 Layout
012.006	Panel EN-6 Layout
012.007	Panel EN-7 Layout
VS-1	Valve Schedule
PD-1	Product Catalog

Johnson Controls

Creating a better climate for business.

- ☐ Environmental Control System
- ■ Facility Management System
- ☐ Air and Water System Balancing
- ☐ Fire Management System
- ☐ Security System
- ☐ Lighting Services
- ☐ Instrumentation System Installation
- ☐ Building Operations Management
- ☐ Energy Conservation Control
- ☐ Training Programs
- ☐ Performance Contracting
- ☐ Planned Service Agreements

Air Conditioning
Heating
Diagnostic Services
Coil Cleaning
Refrigeration
Automatic Temperature Controls
Facility Management Systems
Fire Management
Security Management
Building Operations and Management
Water Treatment
Electrical Equipment
Emergency Generator / Lighting Equipment
Industrial Controls / Recording / Indication Equipment

PROJECT TITLE

Iqualuit Waste Water Treatment Plant Upgrades

ARCHITECT

ENGINEER
Stantec Ltd.
1088C Noble House,
Iqaluit, Nunavut X0A 0H0
Phone: 867-979-0555
Fax: 867-979-0711

MECHANICAL CONTRACTOR
Mecanique Nordique
9257-6131 Quebec Inc.
Levis, QC G7A 2P4
Phone: 418-496-1109

ELECTRICAL CONTRACTOR

Rev. Number	Rev. Initials	Date	Rev. By	Rev. Description
2		10/11/2018	SH	Updated as per CCN001
1		07/23/2018	SH	Submittal

Johnson Controls

Branch Information
Johnson Controls Ltd.
1375 Rue Frank-Carrel
Ville de Quebec, QC G1N 2E7
Phone: 418-681-7958

SALES ENGINEER	PROJECT MANAGER	DESIGNER	DATE	CONTRACT NUMBER
G. D. Montigny	Philippe Cernosek	CoEE	10/11/2018	8N0Y-0079

H:\8N0Y0079\Drawings\TITLE PAGE DRAWING.vsd

LEGEND

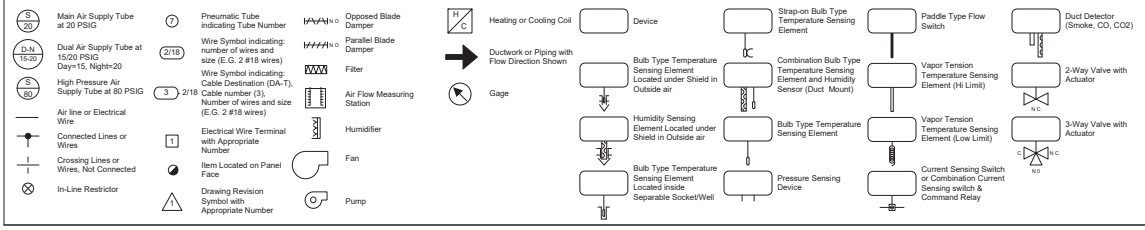

NETWORK RISER

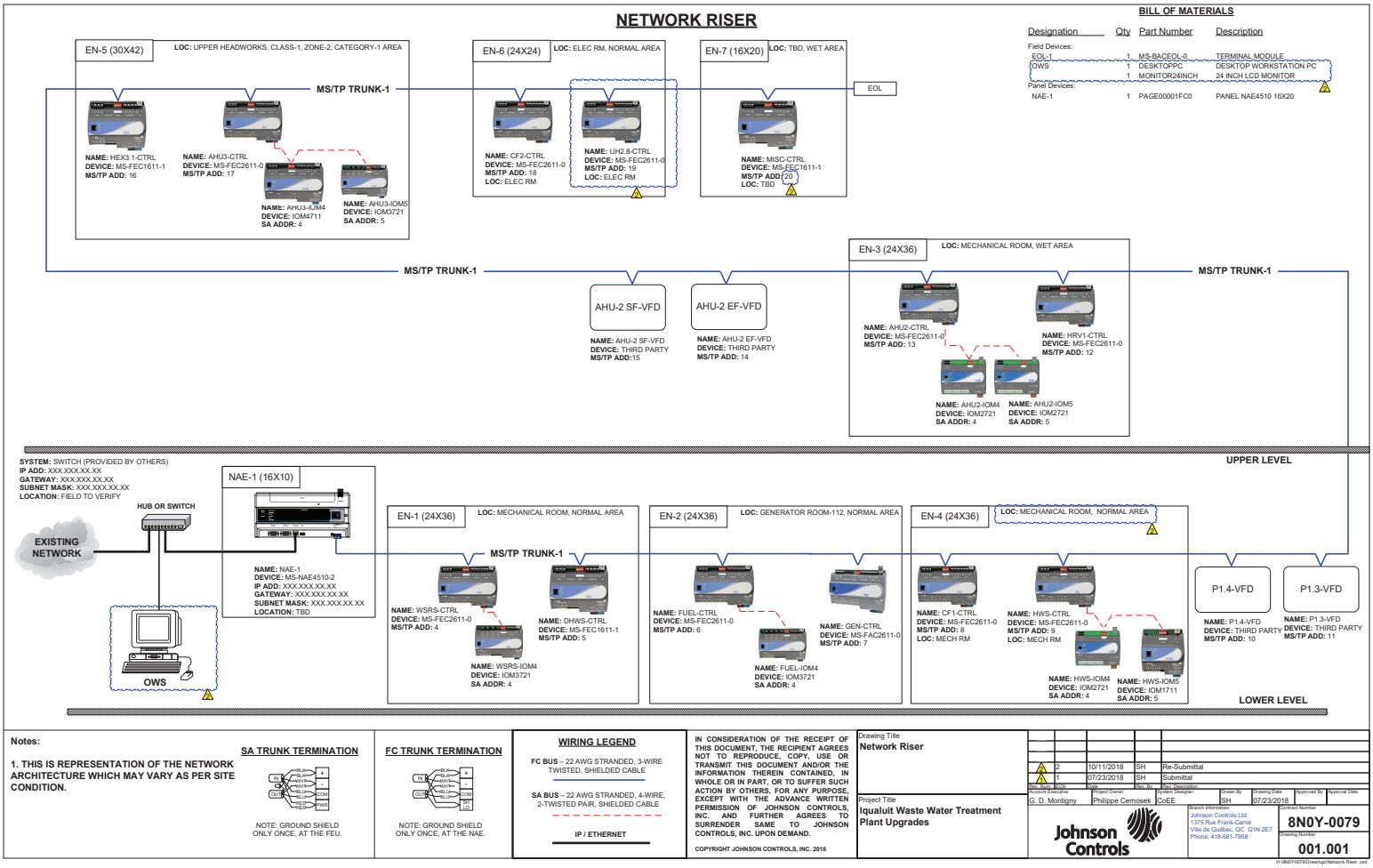

BILL OF MATERIALS

Designation	Qty	Part Number	Description
Field Devices:			
EOL-1	1	MS-BACEOL-0	TERMINAL MODULE
OWS	1	DESKTOPPC	DESKTOP WORKSTATION PC
	1	MONITOR24INCH	24 INCH LCD MONITOR
Panel Devices:			
NAE-1	1	PAGE00001FC0	PANEL NAE4510 16X20

Notes:

1. THIS IS REPRESENTATION OF THE NETWORK ARCHITECTURE WHICH MAY VARY AS PER SITE CONDITION.

SA TRUNK TERMINATION

NOTE: GROUND SHIELD ONLY ONCE, AT THE FEU.

FC TRUNK TERMINATION

NOTE: GROUND SHIELD ONLY ONCE, AT THE NAE.

WIRING LEGEND

FC BUS – 22 AWG STRANDED, 3-WIRE TWISTED, SHIELDED CABLE

SA BUS – 22 AWG STRANDED, 4-WIRE, 2-TWISTED PAIR, SHIELDED CABLE

IP / ETHERNET

IN CONSIDERATION OF THE RECEIPT OF THIS DOCUMENT, THE RECIPIENT AGREES NOT TO REPRODUCE, COPY, USE OR TRANSMIT THIS DOCUMENT AND/OR THE INFORMATION THEREIN CONTAINED, IN WHOLE OR IN PART, OR TO SUFFER SUCH ACTION BY OTHERS, FOR ANY PURPOSE, EXCEPT WITH THE ADVANCE WRITTEN PERMISSION OF JOHNSON CONTROLS, INC. AND FURTHER AGREES TO SURRENDER SAME TO JOHNSON CONTROLS, INC. UPON DEMAND.

COPYRIGHT JOHNSON CONTROLS, INC. 2018

Drawing Title: **Network Riser**

Project Title: **Iqualuit Waste Water Treatment Plant Upgrades**

Rev	Date	By	Description
2	10/11/2018	SH	Re-Submittal
1	07/23/2018	SH	Submittal

Account Executive	Project Owner	System Designer	Drawn By	Drawing Date	Approved By	Approval Date
G. D. Montigny	Philippe Cemosek	CoEE	SH	07/23/2018		

Johnson Controls

Branch Information
Johnson Controls Ltd.
1375 Rue Frank-Carrel
Ville de Québec, QC G1N 2E7
Phone: 418-681-7958

Contract Number: **8N0Y-0079**

Drawing Number: **001.001**

H:\8N0Y\0079\Drawings\Network Riser .vsd

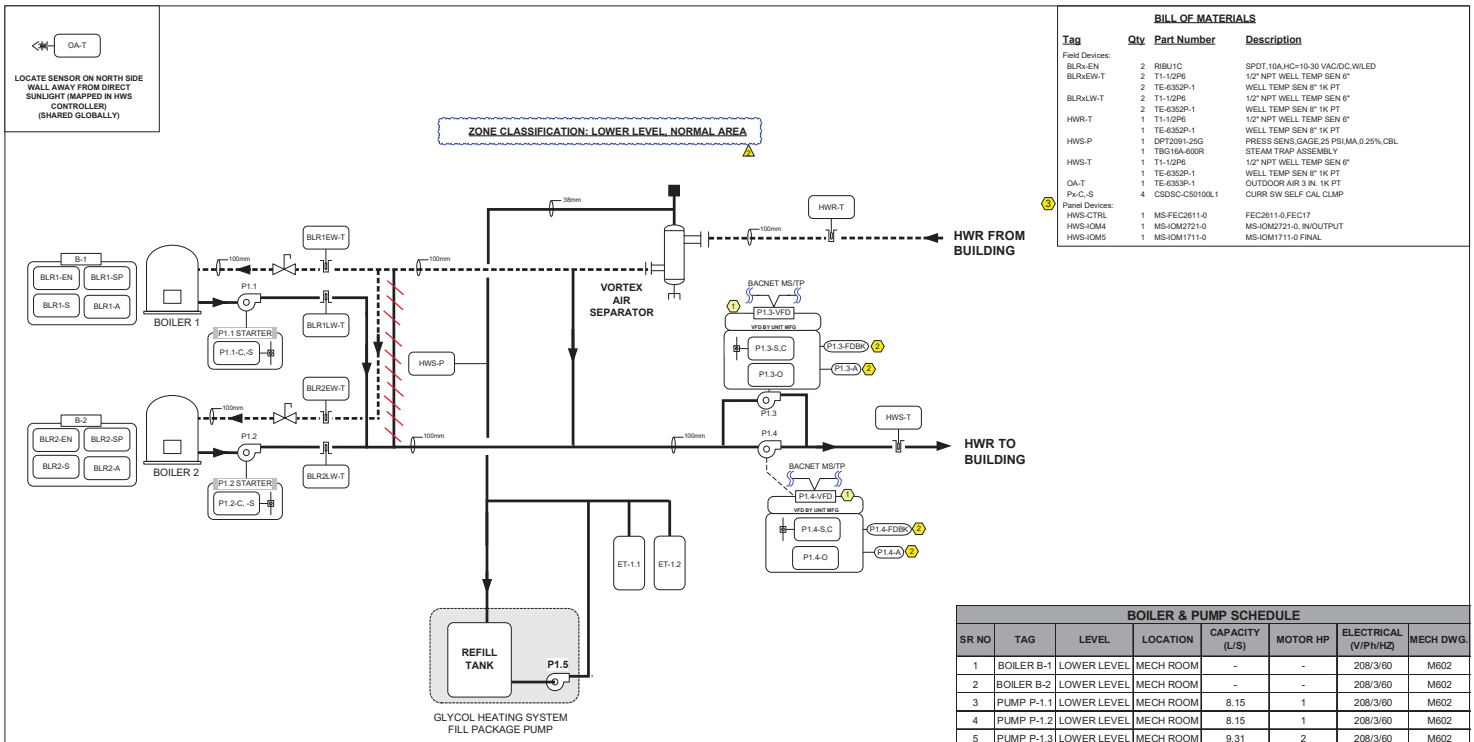

BILL OF MATERIALS

Tag	Qty	Part Number	Description
Field Devices:			
BLRx-EN	2	RIBU1C	SPDT,10A,HC=10-30 VAC/DC,W/LED
BLRxEW-T	2	T1-1/2P6	1/2" NPT WELL TEMP SEN 6"
	2	TE-6352P-1	WELL TEMP SEN 8" 1K PT
BLRxLW-T	2	T1-1/2P6	1/2" NPT WELL TEMP SEN 6"
	2	TE-6352P-1	WELL TEMP SEN 8" 1K PT
HWR-T	1	T1-1/2P6	1/2" NPT WELL TEMP SEN 6"
	1	TE-6352P-1	WELL TEMP SEN 8" 1K PT
HWS-P	1	DPT2091-25G	PRESS SENS,GAGE,25 PSI,MA,0.25%,CBL
	1	TBG16A-600R	STEAM TRAP ASSEMBLY
HWS-T	1	T1-1/2P6	1/2" NPT WELL TEMP SEN 6"
	1	TE-6352P-1	WELL TEMP SEN 8" 1K PT
OA-T	1	TE-6353P-1	OUTDOOR AIR 3 IN. 1K PT
Px-C,-S	4	CSDSC-C50100L1	CURR SW SELF CAL CLMP
Panel Devices:			
HWS-CTRL	1	MS-FEC2611-0	FEC2611-0,FEC17
HWS-IOM4	1	MS-IOM2721-0	MS-IOM2721-0, IN/OUTPUT
HWS-IOM5	1	MS-IOM1711-0	MS-IOM1711-0 FINAL

BOILER & PUMP SCHEDULE

SR NO	TAG	LEVEL	LOCATION	CAPACITY (L/S)	MOTOR HP	ELECTRICAL (V/Ph/HZ)	MECH DWG.
1	BOILER B-1	LOWER LEVEL	MECH ROOM	-	-	208/3/60	M602
2	BOILER B-2	LOWER LEVEL	MECH ROOM	-	-	208/3/60	M602
3	PUMP P-1.1	LOWER LEVEL	MECH ROOM	8.15	1	208/3/60	M602
4	PUMP P-1.2	LOWER LEVEL	MECH ROOM	8.15	1	208/3/60	M602
5	PUMP P-1.3	LOWER LEVEL	MECH ROOM	9.31	2	208/3/60	M602
6	PUMP P-1.4	LOWER LEVEL	MECH ROOM	9.31	2	208/3/60	M602
7	PUMP P-1.5	LOWER LEVEL	MECH ROOM	0.06	0.7A	115/1/60	M602

NOTES:

1. VFDS ARE PROVIDED BY OTHERS & COMMUNICATING ON BACnet.
2. COMMUNICATION THROUGH BACnet INTEGRATION.
3. REFER PANEL DETAILS ON DWG 012.004.

IN CONSIDERATION OF THE RECEIPT OF THIS DOCUMENT, THE RECIPIENT AGREES NOT TO REPRODUCE, COPY, USE OR TRANSMIT THIS DOCUMENT AND/OR THE INFORMATION THEREIN CONTAINED, IN WHOLE OR IN PART, OR TO SUFFER SUCH ACTION BY OTHERS, FOR ANY PURPOSE, EXCEPT WITH THE ADVANCE WRITTEN PERMISSION OF JOHNSON CONTROLS, INC. AND FURTHER AGREES TO SURRENDER SAME TO JOHNSON CONTROLS, INC. UPON DEMAND.

COPYRIGHT JOHNSON CONTROLS, INC. 2018

Drawing Title: **Heating Water System Flow Diagram**

Project Title: **Iqualuit Waste Water Treatment Plant Upgrades**

Rev.	Rev. Date	Rev. By	Rev. Description
2	10/11/2018	SH	Re-Submittal
1	07/23/2018	SH	Submittal

Account Executive	Project Owner	Drawn Designer	Drawn By	Drawing Date	Approved By	Approval Date
G. D. Montigny	Philippe Cemosek	CoEE	SH	07/23/2018		

Johnson Controls

Branch Information
Johnson Controls Ltd.
1375 Rue Frank-Carrel
Ville de Québec, QC G1N 2E7
Phone: 418-681-7958

Contract Number: **8N0Y-0079**

Drawing Number: **002.001**

SEQUENCE OF OPERATION:

GENERAL:
BUILDING HEATING WATER SYSTEM INCLUDES TWO MODULATING OIL FIRED HYDRONIC HEATING WATER BOILERS, PRIMARY RECIRCULATION PUMPS, PACKAGED GLYCOL FILL SYSTEM AND SECONDARY HEATING WATER PUMPS.
THE PRIMARY HEATING SYSTEM CONSISTS OF 2 GLYCOL BOILERS B-1 AND B-2 EACH COMPLETE WITH A CIRCULATION PUMP P-1.1 AND P-1.2 RESPECTIVELY.
EACH BOILER IS SUPPLIED WITH A DIGITAL UNIVERSAL CONTROLLER. THE BOILER BURNER INCLUDES LOCAL BURNER MANAGEMENT CONTROLS THAT CONTROL BOILER FIRING. BMS WILL PROVIDE BOILER STAGING, BOILER CIRCULATION PUMP CONTROL AND BOILER SETPOINT RESET AND ALL SAFETY OR OPERATIONAL INTERLOCKS TO THE BOILER BURNER AS REQUIRED.

PRIMARY HW SYSTEM & BOILER CONTROL (B-1, B-2, P1.1, P1.2):
1. THE PRIMARY HEATING SYSTEM IS TO BE ENABLED WHEN THE OUTDOOR AIR TEMPERATURE (OA-T) IS BELOW 16 DEG C. AN ANTI SHORT CYCLE TIME DELAY IS TO BE PROVIDED.
2 THE HEATING BOILERS (B-1 & B-2) WILL OPERATE IN CASCADE SEQUENCE AND ROTATE WHILE MAINTAINING MODULATION OF EACH BOILER AS FOLLOWS:
3. ONCE THE LEAD BOILER FIRING RATE IS GREATER THAN 95% FOR A PERTICULAR DELAY (TIME TO BE DETERMINED DURING COMMISSIONING), THE LAG BOILER CIRCULATION PUMP AND ASSOCIATED BOILER WILL BE ENABLED.
THE BOILERS WILL BE UNLOADED IN REVERSE ORDER WHEN THEIR FIRING RATE IS LESS THAN MINIMUM FIRING RATE FOR A PERTICULAR DELAY (TIME TO BE DETERMINED DURING COMMISSIONING).
4. PROVIDE A DEAD BAND BETWEEN ENABLING AND DISABLING OF THE BOILER. DEAD BAND TO BE DETERMINED DURING COMMISSIONING TO PREVENT EXCESSIVE CYCLING.
5. ONLY AFTER THE PUMP STATUS (P1.1 & P1.2) IS PROVEN CAN THE ASSOCIATED BOILER BE ENABLED.
6. WHEN A BOILER IS DISABLED, ITS CIRCULATION PUMP WILL CONTINUE TO OPERATE FOR 5 MINUTES TO DISSIPATE ANY RESIDUAL HEAT IN THE BOILER.
7. IF THE RUNNING BOILER OR CIRCULATION PUMP FAIL, THE OTHER BOILER AND PUMP WILL BE ENABLED AND THE PREVIOUS BOILER CIRCULATION PUMP AND BOILER WILL BE DISABLED. UPON A FAILURE OF THE PUMP OR ASSOCIATED BOILER, AN ALARM WILL BE GENERATED AT THE OWS.
8. THE LEAD BOILER IS TO ROTATE ON A DUTY RUN TIME EVERY WEEK.
9. BOILER BURNERS TO OPERATE USING PACKAGED BOILER OPERATING CONTROLS. PACKAGED CONTROLS MODULATE BURNER TO SATISFY HWST SETPOINT.
10. THE RESET RATIO AND SET POINTS ARE TO BE ADJUSTABLE BY GRAPHIC OPERATOR INTERFACE AT THE OWS RATHER THAN AT THE BOILER CONTROLLER. THE HWS TEMPERATURE IS TO RESET BASED ON O/A TEMP. INITIAL HWS RESET SCHEDULE SETPOINTS:

AT OAT < -30 DEG C HWS = 82 DEG.C
AT OAT > +16 DEG C HWS = 60 DEG C

11. WHEN LEAD BOILER ENERGIZED, ASSOCIATED BOILER PRIMARY CIRCULATION PUMP ENERGIZED. PRIMARY PUMP STATUS BY PUMP CURRENT. ON FAILURE OF PUMP, INDICATE ALARM AT OWS. BOILER CONTROLLER TO SEQUENCE TO NEXT SCHEDULED BOILER.
12. LOW WATER CUTOFF (LWCO) TO DISABLE BOILER IN EVENT OF LOW HEATING WATER LEVEL.
13. HIGH LIMIT CONTROLLER WITH MANUAL RESET TO DISABLE BOILER IN EVENT OF HIGH HEATING WATER TEMPERATURE. SETPOINT = 93 DEG C.
14. INDICATE BOILER INLET AND OUTLET WATER TEMPERATURES, TEMPERATURE DIFFERENTIAL, SET POINT TEMPERATURES, SET POINT DIFFERENTIAL, OUTDOOR AIR TEMPERATURE, AND RESET TEMPERATURES AT OWS.
15. INDICATE TROUBLE AT OWS IN EVENT THAT HWS TEMPERATURE IS 10 DEG C LESS THAN HWST SETPOINT FOR PERIOD GREATER THAN 10 MINUTES.

SECONDARY HW SYSTEM (P1.3, P1.4):
1. THE SECONDARY HEATING SYSTEM CONSISTS OF TWO PUMPS P1.3 & P1.4 SIZED FOR 100% OF THEIR RESPECTIVE LOAD. THE PUMP SPEEDS ARE CONTROLLED BY VARIABLE FREQUENCY DRIVE COMPLETE WITH BACNET CARDS (ALLOW FOR 5 MAPPED POINTS) AND ARE NORMALLY ACTIVATED VIA THE CONTROL SYSTEM WHEN THE PRIMARY HEATING SYSTEM IS ENABLED.
2. SECONDARY HW PUMPS TO OPERATE LEAD/STANDBY. LEAD SECONDARY PUMP TO START WHEN PRIMARY HW ENABLED. LEAD SECONDARY PUMPS TO ALTERNATE ON TOTAL RUN TIME DUTY CYCLE. ALTERNATE MAIN PUMP AFTER 168 HRS OPERATION. INDICATE TRANSFER.
3. ON PUMP START LEAD SECONDARY HW PUMP TO START AT 30% FLOW CONDITION. MODULATE PUMP SPEED TO MAINTAIN SECONDARY HWST AT RESET HW SUPPLY TEMPERATURE AND SECONDARY HWRT AT MAXIMUM 16.7 DEG C. TEMPERATURE DIFFERENTIAL TO MAXIMUM PUMP SPEED 1800 RPM. IN EVENT OF LEAD HW PUMP FAILURE AUTO-CHANGE TO STANDBY PUMP AND INDICATE FAILURE.
4. IN EVENT OF LEAD PUMP AND STANDBY PUMP FAILURE OR FAILURE OF EITHER PUMP. WHEN BOTH PUMPS TO BE OPERATING INDICATE FAILURE AND SEND SIGNAL TO STATION PROCESS CONTROL PLC.
5. IN EVENT OF LEAD PUMP FAILURE AS SENSED BY CURRENT SENSOR, ALARM LEAD PUMP FAILURE AT PUMP SEQUENCER AND ENERGIZE STANDBY PUMP.
6. PUMPS RUN CONTINUOUS UNTIL OUTDOOR AIR TEMPERATURE GREATER THAN 16 DEG C FOR 2 HOURS. MINIMUM DEADBAND = 3 DEG C.

MONITORING POINTS FROM BAS:

I. BOILER SUPPLY TEMPERATURES (BxHWS-T)
II.BOILER RETURN TEMPERATURES (BxHWR-T)
III.HW SYSTEM PRESSURE (HWS-P)
IV.BOILER-1 ALARM
V.BOILER-2 ALARM
VI.PUMP P-1.3 VFD ALARM
VII.PUMP P-1.4 VFD ALARM
VIII. SECONDARY SUPPLY TEMPERATURE (HWS-T)
IX. SECONDARY RETURN TEMPERATURE (HWR-T).

NOTE:

IN CONSIDERATION OF THE RECEIPT OF THIS DOCUMENT, THE RECIPIENT AGREES NOT TO REPRODUCE, COPY, USE OR TRANSMIT THIS DOCUMENT AND/OR THE INFORMATION THEREIN CONTAINED, IN WHOLE OR IN PART, OR TO SUFFER SUCH ACTION BY OTHERS, FOR ANY PURPOSE, EXCEPT WITH THE ADVANCE WRITTEN PERMISSION OF JOHNSON CONTROLS, INC. AND FURTHER AGREES TO SURRENDER SAME TO JOHNSON CONTROLS, INC. UPON DEMAND.

COPYRIGHT JOHNSON CONTROLS, INC. 2018

Drawing Title
Heating Water System Sequence of Operation

No.	Date	By	Description
1	07/23/2018	SH	Submittal

Account Executive	Project Owner	Comm Designer	Drawn By	Drawing Date	Approved By	Approval Date
G. D. Montigny	Philippe Cemosek	CoEE	SH	07/23/2018		

Project Title
Iqualuit Waste Water Treatment Plant Upgrades

Johnson Controls

Branch Information
Johnson Controls Ltd.
1375 Rue Frank-Carrel
Ville de Québec, QC G1N 2E7
Phone: 418-681-7958

Contract Number
8N0Y-0079

Drawing Number
002.002

H:\8N0Y\00790\Drawings\Heating Water System Sequence of Operation.vsd

Electrician/Fitter		Point Information			Controller Information						Panel Information				Intermediate Device				Field Device				
Tag	Point Type	System Name	Object Name	Expanded ID	Controller Details	Trunk Type	Trunk Nbr	Trunk Addr.	Cable Destination Bay/Terminal	Termination Out	Panel	Panel Location (1)	Reference Drawing	Cable Number	Wiring /Tubing	Termination In	Device	Termination Out	Wiring /Tubing	Termination In	Device	Ref Detail Shape	Comment
		HWS			FEC 2611						EN-4	LOWER LVL, MECH RM	M602										Power to Controller
		HWS			FEC 2611	MS/TP	1	9			EN-4	LOWER LVL, MECH RM	M602										BacNet FC Bus
	UI IN-1	HWS	BLR1LW-T	Boiler 1 HW Leaving Temp	FEC 2611	MS/TP	1	9	UI IN-1	IN1, ICOM1	EN-4	LOWER LVL, MECH RM	M602	4-9-UI IN-1					2/22	2-Wire	TE	F131	
	UI IN-2	HWS	BLR1EW-T	Boiler 1 HW EnteringTemp	FEC 2611	MS/TP	1	9	UI IN-2	IN2, ICOM2	EN-4	LOWER LVL, MECH RM	M602	4-9-UI IN-2					2/22	2-Wire	TE	F131	
	UI IN-3	HWS	BLR2LW-T	Boiler 2 HW Leaving Temp	FEC 2611	MS/TP	1	9	UI IN-3	IN3, ICOM3	EN-4	LOWER LVL, MECH RM	M602	4-9-UI IN-3					2/22	2-Wire	TE	F131	
	UI IN-4	HWS	BLR2EW-T	Boiler 2 HW EnteringTemp	FEC 2611	MS/TP	1	9	UI IN-4	IN4, ICOM4	EN-4	LOWER LVL, MECH RM	M602	4-9-UI IN-4					2/22	2-Wire	TE	F131	
	UI IN-5	HWS	HWS-P	Hot Water Supply Press	FEC 2611	MS/TP	1	9	UI IN-5	IN5, +15V	EN-4	LOWER LVL, MECH RM	M602	4-9-UI IN-5					2/22	-, +	DPT2xxx (mA)	F106	
	UI IN-6	HWS	OA-T	Outside Air Temp	FEC 2611	MS/TP	1	9	UI IN-6	IN6, ICOM6	EN-4	LOWER LVL, MECH RM	M602	4-9-UI IN-6					2/22	2-Wire	TE	F131	
	BI IN-7	HWS	P1.1-S	Pump 1.1 Status	FEC 2611	MS/TP	1	9	BI IN-7	IN7, ICOM7	EN-4	LOWER LVL, MECH RM	M602	4-9-BI IN-7	2/22	OUT, COM	Current Relay	Motor Lead	Motor Lead	See wiring detail	Motor Status (Contact)	F301	
	BI IN-8	HWS	P1.2-S	Pump 1.2 Status	FEC 2611	MS/TP	1	9	BI IN-8	IN8, ICOM8	EN-4	LOWER LVL, MECH RM	M602	4-9-BI IN-8	2/22	OUT, COM	Current Relay	Motor Lead	Motor Lead	See wiring detail	Motor Status (Contact)	F301	
	BO OUT-1	HWS	BLR1-EN	Boiler 1 Enable	FEC 2611	MS/TP	1	9	BO OUT-1	OUT1, 24V COM	EN-4	LOWER LVL, MECH RM	M602	4-9-BO OUT-1	2/22	COIL-, COIL+	Relay	COM, NO	2/14	See wiring detail	Boiler Control Panel (Sw Hi, EXT Src)	F1001	
	BO OUT-2	HWS	BLR2-EN	Boiler 2 Enable	FEC 2611	MS/TP	1	9	BO OUT-2	OUT2, 24V COM	EN-4	LOWER LVL, MECH RM	M602	4-9-BO OUT-2	2/22	COIL-, COIL+	Relay	COM, NO	2/14	See wiring detail	Boiler Control Panel (Sw Hi, EXT Src)	F1001	
	BO OUT-3	HWS	P1.1-C	Pump 1.1 Command	FEC 2611	MS/TP	1	9	BO OUT-3	OUT3, 24V COM	EN-4	LOWER LVL, MECH RM	M602	4-9-BO OUT-3	2/22	COIL-, COIL+	Relay	COM, NO	2/14	See wiring detail	Starter (w/o Safeties) (Sw Hi, EXT)	F1015	
	CO OUT-4	HWS	P1.2-C	Pump 1.2 Command	FEC 2611	MS/TP	1	9	CO OUT-4	OUT4, 24V COM	EN-4	LOWER LVL, MECH RM	M602	4-9-CO OUT-4	2/22	COIL-, COIL+	Relay	COM, NO	2/14	See wiring detail	Starter (w/o Safeties) (Sw Hi, EXT)	F1015	
	CO OUT-5	HWS	P1.3-C	Pump 1.3 Command	FEC 2611	MS/TP	1	9	CO OUT-5	OUT5, 24V COM	EN-4	LOWER LVL, MECH RM	M602	4-9-CO OUT-5	2/22	COIL-, COIL+	Relay	COM, NO	2/14	See wiring detail	VFD (w/o Safety) (Sw Hi, EXT)	F1043	
	CO OUT-6	HWS	P1.4-C	Pump 1.4 Command	FEC 2611	MS/TP	1	9	CO OUT-6	OUT6, 24V COM	EN-4	LOWER LVL, MECH RM	M602	4-9-CO OUT-6	2/22	COIL-, COIL+	Relay	COM, NO	2/14	See wiring detail	VFD (w/o Safety) (Sw Hi, EXT)	F1043	
	CO OUT-7	HWS			FEC 2611	MS/TP	1	9	CO OUT-7		EN-4	LOWER LVL, MECH RM	M602	4-9-CO OUT-7									
	AO OUT-8	HWS	BLR1-SP	Boiler 1 Setpoint Output	FEC 2611	MS/TP	1	9	AO OUT-8	OUT8, OCOM8	EN-4	LOWER LVL, MECH RM	M602	4-9-AO OUT-8					2/22	See Boiler Panel Detail	Boiler Control Panel (Vdc)		
	AO OUT-9	HWS	BLR2-SP	Boiler 2 Setpoint Output	FEC 2611	MS/TP	1	9	AO OUT-9	OUT9, OCOM9	EN-4	LOWER LVL, MECH RM	M602	4-9-AO OUT-9					2/22	See Boiler Panel Detail	Boiler Control Panel (Vdc)		
		HWS			IOM 2721						EN-4	LOWER LVL, MECH RM	M602										Power to Controller
		HWS			IOM 2721	SA Bus	1	4			EN-4	LOWER LVL, MECH RM	M602										BacNet SA Bus
	UI IN-1	HWS	HWS-T	Hot Water Supply Temp	IOM 2721	SA Bus	1	4	UI IN-1	IN1, ICOM1	EN-4	LOWER LVL, MECH RM	M602	9-4-4-UI IN-1					2/22	2-Wire	TE	F131	
	UI IN-2	HWS	HWR-T	Hot Water Return Temp	IOM 2721	SA Bus	1	4	UI IN-2	IN2, ICOM2	EN-4	LOWER LVL, MECH RM	M602	9-4-4-UI IN-2					2/22	2-Wire	TE	F131	
	UI IN-3	HWS	P1.3-S	Pump 1.3 Status	IOM 2721	SA Bus	1	4	UI IN-3	IN3, ICOM3	EN-4	LOWER LVL, MECH RM	M602	9-4-4-UI IN-3	2/22	OUT, COM	Current Relay	Motor Lead	Motor Lead	See wiring detail	Motor Status (Contact)	F301	
	UI IN-4	HWS	P1.4-S	Pump 1.4 Status	IOM 2721	SA Bus	1	4	UI IN-4	IN4, ICOM4	EN-4	LOWER LVL, MECH RM	M602	9-4-4-UI IN-4	2/22	OUT, COM	Current Relay	Motor Lead	Motor Lead	See wiring detail	Motor Status (Contact)	F301	
	UI IN-5	HWS	BLR1-S	Boiler 1 Status	IOM 2721	SA Bus	1	4	UI IN-5	IN5, ICOM5	EN-4	LOWER LVL, MECH RM	M602	9-4-4-UI IN-5					2/22	See Boiler Panel Detail	Boiler Control Panel (NO or NC)		
	UI IN-6	HWS	BLR2-S	Boiler 2 Status	IOM 2721	SA Bus	1	4	UI IN-6	IN6, ICOM6	EN-4	LOWER LVL, MECH RM	M602	9-4-4-UI IN-6					2/22	See Boiler Panel Detail	Boiler Control Panel (NO or NC)		
	UI IN-7	HWS			IOM 2721	SA Bus	1	4	UI IN-7		EN-4	LOWER LVL, MECH RM	M602	9-4-4-UI IN-7									
	UI IN-8	HWS			IOM 2721	SA Bus	1	4	UI IN-8		EN-4	LOWER LVL, MECH RM	M602	9-4-4-UI IN-8									
	AO OUT-1	HWS	P1.3-O	Pump 1.3 Output	IOM 2721	SA Bus	1	4	AO OUT-1	OUT1, OCOM1	EN-4	LOWER LVL, MECH RM	M602	9-4-4-AO OUT-1					2/22	See VFD Detail	VFD Speed Control (Vdc)	F1043	
	AO OUT-2	HWS	P1.4-O	Pump 1.4 Output	IOM 2721	SA Bus	1	4	AO OUT-2	OUT2, OCOM2	EN-4	LOWER LVL, MECH RM	M602	9-4-4-AO OUT-2					2/22	See VFD Detail	VFD Speed Control (Vdc)	F1043	
		HWS			IOM 1711						EN-4	LOWER LVL, MECH RM	M602										Power to Controller
		HWS			IOM 1711	SA Bus	1	5			EN-4	LOWER LVL, MECH RM	M602										BacNet SA Bus
	BI IN-1	HWS	BLR1-A	Boiler 1 Alarm	IOM 1711	SA Bus	1	5	BI IN-1	IN1, ICOM1	EN-4	LOWER LVL, MECH RM	M602	9-4-5-BI IN-1					2/22	See Boiler Panel Detail	Boiler Control Panel (NO or NC)		
	BI IN-2	HWS	BLR2-A	Boiler 2 Alarm	IOM 1711	SA Bus	1	5	BI IN-2	IN2, ICOM2	EN-4	LOWER LVL, MECH RM	M602	9-4-5-BI IN-2					2/22	See Boiler Panel Detail	Boiler Control Panel (NO or NC)		
	BI IN-3	HWS			IOM 1711	SA Bus	1	5	BI IN-3		EN-4	LOWER LVL, MECH RM	M602	9-4-5-BI IN-3									
	BI IN-4	HWS			IOM 1711	SA Bus	1	5	BI IN-4		EN-4	LOWER LVL, MECH RM	M602	9-4-5-BI IN-4									

NOTE:

(1) FIELD TO VERIFY EXACT LOCATION TO INSTALL PANEL.

IN CONSIDERATION OF THE RECEIPT OF THIS DOCUMENT, THE RECIPIENT AGREES NOT TO REPRODUCE, COPY, USE OR TRANSMIT THIS DOCUMENT AND/OR THE INFORMATION THEREIN CONTAINED, IN WHOLE OR IN PART, OR TO SUFFER SUCH ACTION BY OTHERS, FOR ANY PURPOSE, EXCEPT WITH THE ADVANCE WRITTEN PERMISSION OF JOHNSON CONTROLS, INC. AND FURTHER AGREES TO SURRENDER SAME TO JOHNSON CONTROLS, INC. UPON DEMAND.

COPYRIGHT JOHNSON CONTROLS, INC. 2018

Drawing Title
Heating Water System Hardware Schedule

Rev.	Rev. By	Description
1	SH	Submittal

Date	Account Executive	Project Owner	System Designer	Drawn By	Drawing Date	Approved By	Approval Date
07/23/2018	G. D. Montigny	Philippe Cernosek	CoEE	SH	07/23/2018		

Project Title
Iqualuit Waste Water Treatment Plant Upgrades

Johnson Controls

Branch Information
Johnson Controls Ltd.
1375 Rue Frank-Carrel
Ville de Québec, QC G1N 2E7
Phone: 418-681-7958

Contract Number
8N0Y-0079

Drawing Number
002.003

H:\8N0Y\0079\Drawings\Heating Water System Hardware Schedule.vsd

DETAIL F131 TEMPERATURE SENSOR INPUT

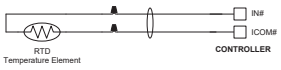

DETAIL F106 CURRENT INPUT - INTERNAL SOURCE (2 Wire)

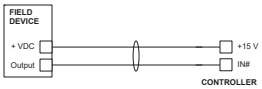

DETAIL F301 BINARY INPUT (DRY CONTACT)

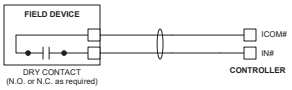

DETAIL F1015 Starter without Safeties Wiring

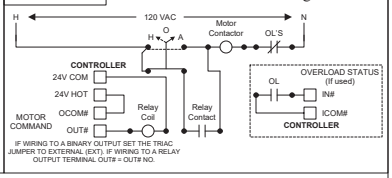

DETAIL F1001 Boiler Control Wiring Detail

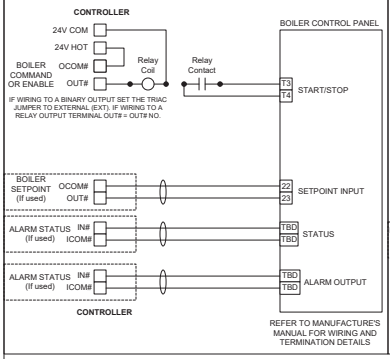

DETAIL F1043 VFD without Safeties Wiring

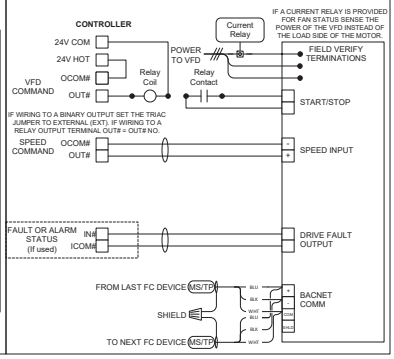

NOTE:

IN CONSIDERATION OF THE RECEIPT OF THIS DOCUMENT, THE RECIPIENT AGREES NOT TO REPRODUCE, COPY, USE OR TRANSMIT THIS DOCUMENT AND/OR THE INFORMATION THEREIN CONTAINED, IN WHOLE OR IN PART, OR TO SUFFER SUCH ACTION BY OTHERS, FOR ANY PURPOSE, EXCEPT WITH THE ADVANCE WRITTEN PERMISSION OF JOHNSON CONTROLS, INC. AND FURTHER AGREES TO SURRENDER SAME TO JOHNSON CONTROLS, INC. UPON DEMAND.

COPYRIGHT JOHNSON CONTROLS, INC. 2018

Drawing Title
Heating Water System Wiring Details

Project Title
Iqualuit Waste Water Treatment Plant Upgrades

Rev. Num.	Rev.	Date	Rev. By	Rev. Description
1	1	07/23/2018	SH	Submittal

Account Executive	Project Owner	System Designer	Drawn By	Drawing Date	Approved By	Approval Date
G. D. Montigny	Philippe Cemosek	CoEE	SH	07/23/2018		

Branch Information
Johnson Controls Ltd.
1375 Rue Frank-Carrel
Ville de Québec, QC G1N 2E7
Phone: 418-681-7958

Contract Number
8N0Y-0079

Drawing Number
002.004

H:\8N0Y0079\Drawing\Heating Water System Wiring Details.vsd

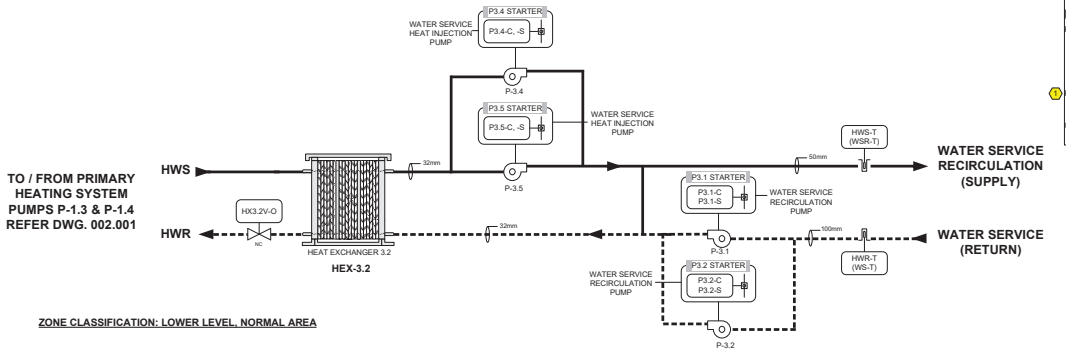

ZONE CLASSIFICATION: LOWER LEVEL, NORMAL AREA

BILL OF MATERIALS

Designation	Qty	Part Number	Description
Field Devices:			
HWR-T	1	T1-1/2P6	1/2" NPT WELL TEMP SEN 6"
	1	TE-6352P-1	WELL TEMP SEN 8" 1K PT
HWS-T	1	T1-1/2P6	1/2" NPT WELL TEMP SEN 6"
	1	TE-6352P-1	WELL TEMP SEN 8" 1K PT
Px-C,-S	4	CSDSC-CS0100L1	CURR SW SELF CAL CLMP
1 Panel Devices:			
WSRS-CTRL	1	MS-FEC2611-0	FEC2611-0,FEC17
WSRS-IOM4	1	MS-IOM3721-0	MS-IOM3721-0,IN/PUT
Other Devices:			
HX3.2V-O, -POS	1	VALVE	REFER VALVE SCHEDULE

PUMP SCHEDULE

SR NO	TAG	LEVEL	LOCATION	CAPACITY (L/S)	MOTOR HP	ELECTRICAL (V/Ph/HZ)	MECH DWG.
1	PUMP P3.1	LOWER LEVEL	GRID H: 6-7	1.7	1/3	115/1/60	M603
2	PUMP P3.2	LOWER LEVEL	GRID H: 6-7	1.7	1/3	115/1/60	M603
4	PUMP P3.4	LOWER LEVEL	GRID H: 6-7	1.59	1/3	115/1/60	M603
5	PUMP P3.5	LOWER LEVEL	GRID H: 6-7	1.59	1/3	115/1/60	M603

HEAT EXCHANGER SCHEDULE

SR NO	TAG	LEVEL	LOCATION	HOT SIDE FLOW	COLD SIDE FLOW	MECH DWG.
1	HEX3.2	LOWER LEVEL	GRID D-E: 6-7	0.68	1.58	M603

SEQUENCE OF OPERATION:

1.WATER SUPPLY & RECIRCULATION SYSTEM:
1. A NEW PIPED POTABLE WATER SYSTEM WILL BE PROVIDED FOR THE WWTP. THE WWTP WATER SUPPLY SYSTEM INCLUDES TWO DOMESTIC WATER RECIRCULATION PUMPS AND A HYDRONIC INDIRECT HEAT INJECTION SYSTEM.

2. WATER SUPPLY RECIRCULATION (P3.1 & P3.2):
1. WATER RECIRCULATION PUMPS ARE ENERGIZED AND RUN CONTINUOUSLY DURING THE WINTER MONTHS AND SHOULDER SEASONS. RECIRCULATION PUMPS ARE NOT REQUIRED WHEN MONTH EQUALS JUNE, JULY OR AUGUST.
2. PUMPS P-3.1 AND PUMP P-3.2 OPERATE AS DUTY/STANDBY PUMPS. ONLY ONE (1) PUMP OPERATES AT ANY TIME.
3. DUTY PUMP ALTERNATES EVERY 168 HOURS.
4. PUMP STATUS WILL BE INDICATED AT OPERATOR WORK STATION.
5. IN EVENT OF DUTY PUMP FAILURE AS SENSED BY CT CURRENT SENSOR, EMCS TO ENERGIZE STANDBY PUMP AND ALARM TROUBLE AT OWS.
6. ENTERING WATER TEMPERATURE (WSR-T) AND LEAVING WATER TEMPERATURE (WS-T) WILL BE INDICATED AT OWS.
7. IN EVENT THAT LEAVING WATER TEMPERATURE LESS THAN 3 DEG C (USER ADJUSTABLE AT OWS), ALARM AT OWS.

3. WATER SUPPLY RECIRCULATION HEAT INJECTION SYSTEM (HEX-3.2, P3.4 & P3.5):
1. THE HEAT INJECTION SYSTEM INCLUDES A DOUBLE WALLED STAINLESS STEEL PLATE HEAT EXCHANGER DESIGNATED HEX-3.2 AND TWO (2) INJECTION PUMPS P-3.4 AND P-3.5. THE INTENT IS TO SIDE STREAM AND HEAT RECIRCULATION WATER THAT IS THEN BLENDED WITH RECIRCULATION WATER TO ENSURE THAT RECIRCULATION LINES DOES NOT FREEZE. THE HEAT INJECTION PUMPS ARE INTERLOCKED WITH PUMPS P-3.1 AND P-3.2.
2. PUMPS P-3.4 AND P-3.5 OPERATE AS DUTY/STANDBY PUMPS. ONLY ONE (1) PUMP OPERATES AT ANY TIME.
3. DUTY PUMP ALTERNATES EVERY 168 HOURS.
4. PUMP STATUS WILL BE INDICATED AT OWS
5. IN EVENT OF DUTY PUMP FAILURE AS SENSED BY CT CURRENT SENSOR, EMCS TO ENERGIZE STANDBY PUMP AND ALARM TROUBLE AT OWS.
6. 2-WAY MODULATING CONTROL VALVE (HX3.2V-O) INSTALLED ON HOT SIDE OF HEX-3.2 MODULATES HW FLOW THROUGH HEX-3.2 TO MAINTAIN WATER SUPPLY RECIRCULATION TEMPERATURE. INITIAL SET POINT = 5 DEG C.
7. ALARM TROUBLE WILL BE INDICATED AT OWS IF WATER SUPPLY RETURN TEMPERATURE LESS THAN 3 DEG C.

NOTE:

1 REFER PANEL DETAILS ON DWG 012.001.

IN CONSIDERATION OF THE RECEIPT OF THIS DOCUMENT, THE RECIPIENT AGREES NOT TO REPRODUCE, COPY, USE OR TRANSMIT THIS DOCUMENT AND/OR THE INFORMATION THEREIN CONTAINED, IN WHOLE OR IN PART, OR TO SUFFER SUCH ACTION BY OTHERS, FOR ANY PURPOSE, EXCEPT WITH THE ADVANCE WRITTEN PERMISSION OF JOHNSON CONTROLS, INC. AND FURTHER AGREES TO SURRENDER SAME TO JOHNSON CONTROLS, INC. UPON DEMAND.

COPYRIGHT JOHNSON CONTROLS, INC. 2018

Drawing Title: **Water Supply & Recirculation System Flow Diagram**

Project Title: **Iqualuit Waste Water Treatment Plant Upgrades**

Rev. No.	Rev. Date	Rev. By	Rev. Description
2	10/11/2018	SH	Re-Submittal
1	07/23/2018	SH	Submittal

Account Executive	Project Owner	Drawn Designer	Drawn By	Drawing Date	Approved By	Approval Date
G. D. Montigny	Philippe Cemosek	CoEE	SH	07/23/2018		

Johnson Controls

Branch Information
Johnson Controls Ltd.
1375 Rue Frank-Carrel
Ville de Québec, QC G1N 2E7
Phone: 418-681-7958

Contract Number: **8N0Y-0079**

Drawing Number: **003.001**

I:\10.109.192.72\Field Engineering\NA\CANADA-HOUSTON\FY-18\PFM\8N0Y0079\Drawings\Water Supply & Recirculation System Flow Diagram.vsd

Electrician/Fitter	Point Information				Controller Information						Panel Information				Intermediate Device				Field Device				
Tag	Point Type	System Name	Object Name	Expanded ID	Controller Details	Trunk Type	Trunk Nbr	Trunk Addr.	Cable Destination Bay/Terminal	Termination Out	Panel	Panel Location (1)	Reference Drawing	Cable Number	Wiring /Tubing	Termination In	Device	Termination Out	Wiring /Tubing	Termination In	Device	Ref Detail Shape	Comment
		WSRS			FEC 2611						EN-1	LOWER LVL, MECH RM	M603										Power to Controller
		WSRS			FEC 2611	MS/TP	1	4			EN-1	LOWER LVL, MECH RM	M603										BacNet FC Bus
	UI IN-1	WSRS	WS-T	Water Supply Temp	FEC 2611	MS/TP	1	4	UI IN-1	IN1, ICOM1	EN-1	LOWER LVL, MECH RM	M603	1-4-UI IN-1					2/22	2-Wire	TE	F131	
	UI IN-2	WSRS	WSR-T	Water Service Recirculation Temp	FEC 2611	MS/TP	1	4	UI IN-2	IN2, ICOM2	EN-1	LOWER LVL, MECH RM	M603	1-4-UI IN-2					2/22	2-Wire	TE	F131	
	UI IN-3	WSRS	P3.4-S	Pump 3.4 Status	FEC 2611	MS/TP	1	4	UI IN-3	IN3, ICOM3	EN-1	LOWER LVL, MECH RM	M603	1-4-UI IN-3	2/22	OUT, COM	Current Relay	Motor Lead	Motor Lead	See wiring detail	Motor Status (Contact)	F301	
	UI IN-4	WSRS	P3.5-S	Pump 3.5 Status	FEC 2611	MS/TP	1	4	UI IN-4	IN4, ICOM4	EN-1	LOWER LVL, MECH RM	M603	1-4-UI IN-4	2/22	OUT, COM	Current Relay	Motor Lead	Motor Lead	See wiring detail	Motor Status (Contact)	F301	
	UI IN-5	WSRS			FEC 2611	MS/TP	1	4	UI IN-5		EN-1	LOWER LVL, MECH RM	M603	1-4-UI IN-5									
	UI IN-6	WSRS			FEC 2611	MS/TP	1	4	UI IN-6		EN-1	LOWER LVL, MECH RM	M603	1-4-UI IN-6									
	BI IN-7	WSRS	P3.1-S	Pump 3.1 Status	FEC 2611	MS/TP	1	4	BI IN-7	IN7, ICOM7	EN-1	LOWER LVL, MECH RM	M603	1-4-BI IN-7	2/22	OUT, COM	Current Relay	Motor Lead	Motor Lead	See wiring detail	Motor Status (Contact)	F301	
	BI IN-8	WSRS	P3.2-S	Pump 3.2 Status	FEC 2611	MS/TP	1	4	BI IN-8	IN8, ICOM8	EN-1	LOWER LVL, MECH RM	M603	1-4-BI IN-8	2/22	OUT, COM	Current Relay	Motor Lead	Motor Lead	See wiring detail	Motor Status (Contact)	F301	
	BO OUT-1	WSRS	P3.1-C	Pump 3.1 Command	FEC 2611	MS/TP	1	4	BO OUT-1	OUT1, 24V COM	EN-1	LOWER LVL, MECH RM	M603	1-4-BO OUT-1	2/22	COIL-, COIL+	Relay	COM, NO	2/14	See wiring detail	Starter (w/o Safeties) (Sw HI, EXT)	F1015	
	BO OUT-2	WSRS	P3.2-C	Pump 3.2 Command	FEC 2611	MS/TP	1	4	BO OUT-2	OUT2, 24V COM	EN-1	LOWER LVL, MECH RM	M603	1-4-BO OUT-2	2/22	COIL-, COIL+	Relay	COM, NO	2/14	See wiring detail	Starter (w/o Safeties) (Sw HI, EXT)	F1015	
	BO OUT-3	WSRS	P3.4-C	Pump 3.4 Command	FEC 2611	MS/TP	1	4	BO OUT-3	OUT3, 24V COM	EN-1	LOWER LVL, MECH RM	M603	1-4-BO OUT-3	2/22	COIL-, COIL+	Relay	COM, NO	2/14	See wiring detail	Starter (w/o Safeties) (Sw HI, EXT)	F1015	
	CO OUT-4	WSRS	P3.5-C	Pump 3.5 Command	FEC 2611	MS/TP	1	4	CO OUT-4	OUT4, 24V COM	EN-1	LOWER LVL, MECH RM	M603	1-4-CO OUT-4	2/22	COIL-, COIL+	Relay	COM, NO	2/14	See wiring detail	Starter (w/o Safeties) (Sw HI, EXT)	F1015	
BLDG-LT2	CO OUT-5	WSRS	HEATSYS-FAIL	Heating System Fail Enable	FEC 2611	MS/TP	1	4	CO OUT-5	OUT5, 24V COM	EN-1	LOWER LVL, MECH RM	M603	1-4-CO OUT-5					2/18	See wiring detail	24VAC OUT (Sw HI, EXT Source)	F901	REFER DWG 011.002
BLDG-LT2	CO OUT-6	WSRS	ALRM-LT	Light Enable Alarm Enable	FEC 2611	MS/TP	1	4	CO OUT-6	OUT6, 24V COM	EN-1	LOWER LVL, MECH RM	M603	1-4-CO OUT-6					2/18	See wiring detail	24VAC OUT (Sw HI, EXT Source)	F901	REFER DWG 011.002
	CO OUT-7	WSRS			FEC 2611	MS/TP	1	4	CO OUT-7		EN-1	LOWER LVL, MECH RM	M603	1-4-CO OUT-7									
	AO OUT-8	WSRS	HX3.2V-O	Heat Exch 3.2 Vlv Output	FEC 2611	MS/TP	1	4	AO OUT-8	OUT8, OCOM8,24VAC, COM	EN-1	LOWER LVL, MECH RM	M603	1-4-AO OUT-8					2/22 / 2/18	GRY, BLK/BLK, RED	M92xx-GGx-x (Vdc) (Ext Source)	F267	
	AO OUT-9	WSRS			FEC 2611	MS/TP	1	4	AO OUT-9		EN-1	LOWER LVL, MECH RM	M603	1-4-AO OUT-9									
		WSRS			IOM 3721						EN-1	LOWER LVL, MECH RM	M603										Power to Controller
		WSRS			IOM 3721	SA Bus	1	4			EN-1	LOWER LVL, MECH RM	M603										BacNet SA Bus
SUMP PUMP	BI IN-1	WSRS	SPHL2.3 & 2.4-A	Sump Pump 2.3 & 2.4 High Level Alarm	IOM 3721	SA Bus	1	4	BI IN-1	IN1, ICOM1	EN-1	LOWER LVL, MECH RM	M603	4-1-4-BI IN-1					2/22	See wiring detail	Dry Contact	F301	REFER DWG 011.001
SUMP PUMP	BI IN-2	WSRS	SUMP2.3-A	Sump Pump 2.3 Alarm	IOM 3721	SA Bus	1	4	BI IN-2	IN2, ICOM2	EN-1	LOWER LVL, MECH RM	M603	4-1-4-BI IN-2					2/22	See wiring detail	Dry Contact	F301	REFER DWG 011.001
SUMP PUMP	BI IN-3	WSRS	SUMP2.4-A	Sump Pump 2.4 Alarm	IOM 3721	SA Bus	1	4	BI IN-3	IN3, ICOM3	EN-1	LOWER LVL, MECH RM	M603	4-1-4-BI IN-3					2/22	See wiring detail	Dry Contact	F301	REFER DWG 011.001
SUMP PUMP	BI IN-4	WSRS	SPHL2.5 & 2.6-A	Sump Pump 2.5 & 2.6 High Level Alarm	IOM 3721	SA Bus	1	4	BI IN-4	IN4, ICOM4	EN-1	LOWER LVL, MECH RM	M603	4-1-4-BI IN-4					2/22	See wiring detail	Dry Contact	F301	REFER DWG 011.001
SUMP PUMP	BI IN-5	WSRS	SUMP2.5-A	Sump Pump 2.5 Alarm	IOM 3721	SA Bus	1	4	BI IN-5	IN5, ICOM5	EN-1	LOWER LVL, MECH RM	M603	4-1-4-BI IN-5					2/22	See wiring detail	Dry Contact	F301	REFER DWG 011.001
SUMP PUMP	BI IN-6	WSRS	SUMP2.6-A	Sump Pump 2.6 Alarm	IOM 3721	SA Bus	1	4	BI IN-6	IN6, ICOM6	EN-1	LOWER LVL, MECH RM	M603	4-1-4-BI IN-6					2/22	See wiring detail	Dry Contact	F301	REFER DWG 011.001
SUMP PUMP	BI IN-7	WSRS	SUMP2.3-S	Sump Pump 2.3 Status	IOM 3721	SA Bus	1	4	BI IN-7	IN7, ICOM7	EN-1	LOWER LVL, MECH RM	M603	4-1-4-BI IN-7					2/22	See wiring detail	Dry Contact	F301	REFER DWG 011.001
SUMP PUMP	BI IN-8	WSRS	SUMP2.4-S	Sump Pump 2.4 Status	IOM 3721	SA Bus	1	4	BI IN-8	IN8, ICOM8	EN-1	LOWER LVL, MECH RM	M603	4-1-4-BI IN-8					2/22	See wiring detail	Dry Contact	F301	REFER DWG 011.001
SUMP PUMP	BI IN-9	WSRS	SUMP2.5-S	Sump Pump 2.5 Status	IOM 3721	SA Bus	1	4	BI IN-9	IN9, ICOM9	EN-1	LOWER LVL, MECH RM	M603	4-1-4-BI IN-9					2/22	See wiring detail	Dry Contact	F301	REFER DWG 011.001
SUMP PUMP	BI IN-10	WSRS	SUMP2.6-S	Sump Pump 2.6 Status	IOM 3721	SA Bus	1	4	BI IN-10	IN10, ICOM10	EN-1	LOWER LVL, MECH RM	M603	4-1-4-BI IN-10					2/22	See wiring detail	Dry Contact	F301	REFER DWG 011.001
	BI IN-11	WSRS			IOM 3721	SA Bus	1	4	BI IN-11		EN-1	LOWER LVL, MECH RM	M603	4-1-4-BI IN-11									
	BI IN-12	WSRS			IOM 3721	SA Bus	1	4	BI IN-12		EN-1	LOWER LVL, MECH RM	M603	4-1-4-BI IN-12									
	BI IN-13	WSRS			IOM 3721	SA Bus	1	4	BI IN-13		EN-1	LOWER LVL, MECH RM	M603	4-1-4-BI IN-13									
	BI IN-14	WSRS			IOM 3721	SA Bus	1	4	BI IN-14		EN-1	LOWER LVL, MECH RM	M603	4-1-4-BI IN-14									
	BI IN-15	WSRS			IOM 3721	SA Bus	1	4	BI IN-15		EN-1	LOWER LVL, MECH RM	M603	4-1-4-BI IN-15									
	BI IN-16	WSRS			IOM 3721	SA Bus	1	4	BI IN-16		EN-1	LOWER LVL, MECH RM	M603	4-1-4-BI IN-16									
BLDG-LT2		WSRS			NET STAT						EN-1	LOWER LVL, MECH RM	M603										
BLDG-LT2		WSRS			NET STAT	SA Bus	1	200			EN-1	LOWER LVL, MECH RM	M603										BacNet SA Bus
BLDG-LT2	STAT	WSRS	ZN-T, -SP	Zone Temperature, Setpoint	NET STAT	SA Bus	1	200	STAT	+,-,COM,SA PWR	EN-1	LOWER LVL, MECH RM	M603	4-1-200-STAT					4/22	+,-,COM,SA PWR	NetSensor (Term,Addressable)	NS102	REFER DWG 011.002

DETAIL F131 TEMPERATURE SENSOR INPUT

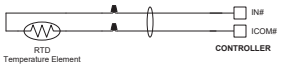

DETAIL F901 24 VAC TRIAC OUTPUT (Switch High, EXT Sourced)

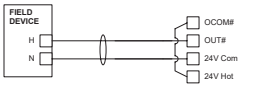

DETAIL F1015 Starter without Safeties Wiring

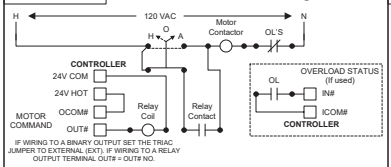

IF WIRING TO A BINARY OUTPUT SET THE TRIAC JUMPER TO EXTERNAL (EXT). IF WIRING TO A RELAY OUTPUT TERMINAL OUT# = OUT# NO.

DETAIL F267 0-10VDC OUTPUT to M92xx-GGx and HGx or VA92xx-GGx and HGx

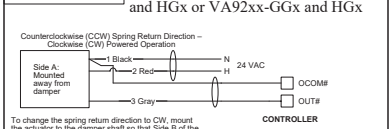

To change the spring return direction to CW, mount the actuator to the damper shaft so that Side B of the actuator is away from the damper. With power applied, the actuator now drives CCW from the 0° position, and spring returns CW.

DETAIL NS102 NET STAT WITH TERMINALS ADDRESSABLE

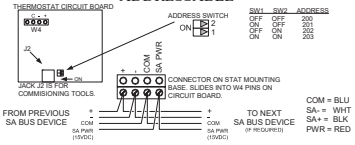

DETAIL F301 BINARY INPUT (DRY CONTACT)

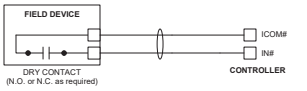

NOTE:

(1) FIELD TO VERIFY EXACT LOCATION TO INSTALL PANEL.

IN CONSIDERATION OF THE RECEIPT OF THIS DOCUMENT, THE RECIPIENT AGREES NOT TO REPRODUCE, COPY, USE OR TRANSMIT THIS DOCUMENT AND/OR THE INFORMATION THEREIN CONTAINED, IN WHOLE OR IN PART, OR TO SUFFER SUCH ACTION BY OTHERS, FOR ANY PURPOSE, EXCEPT WITH THE ADVANCE WRITTEN PERMISSION OF JOHNSON CONTROLS, INC. AND FURTHER AGREES TO SURRENDER SAME TO JOHNSON CONTROLS, INC. UPON DEMAND.

COPYRIGHT JOHNSON CONTROLS, INC. 2018

Drawing Title
Water Supply & Recirculation System Hardware Schedule & Wiring Details

Project Title
Iqualuit Waste Water Treatment Plant Upgrades

No.	Rev.	Date	By	Description
1	1	07/23/2018	SH	Submittal

Account Executive	Project Owner	System Designer	Drawn By	Drawing Date	Approved By	Approval Date
G. D. Montigny	Philippe Cemosek	CoEE	SH	07/23/2018		

Johnson Controls

Branch Information
Johnson Controls Ltd.
1375 Rue Frank-Carrel
Ville de Québec, QC G1N 2E7
Phone: 418-681-7958

Contract Number: **8N0Y-0079**

Drawing Number: **003.002**

H:\8N0Y00079\Drawings\Water Supply & Recirculation System Hardware Schedule & Wiring Details.vsd

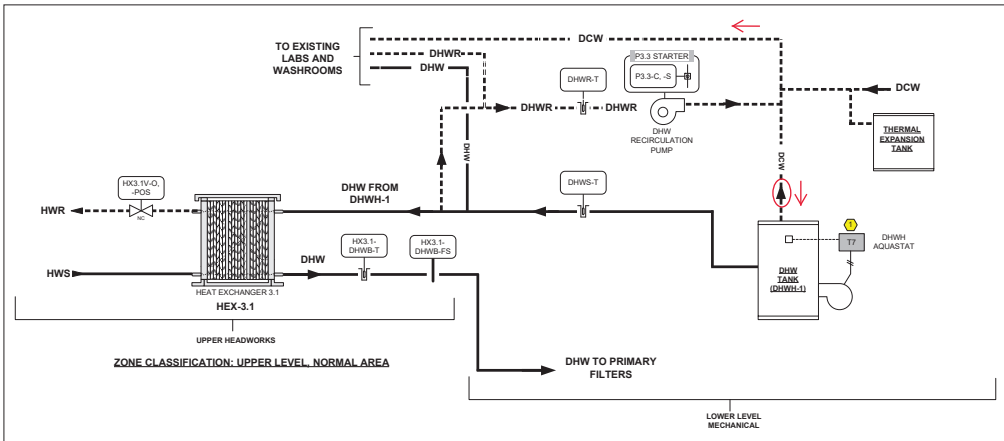

BILL OF MATERIALS

Designation	Qty	Part Number	Description
Field Devices:			
DHWR-T	1	T1-1/2P6	1/2" NPT WELL TEMP SEN 6"
	1	TE-6352P-1	WELL TEMP SEN 8" 1K PT
DHWS-T	1	T1-1/2P6	1/2" NPT WELL TEMP SEN 6"
	1	TE-6352P-1	WELL TEMP SEN 8" 1K PT
HX3.1-DHWB-FS	1	F261MAH-V01C	LIQUID FLOW SWITCH
HX3.1-DHWB-T	1	T1-1/2P6	1/2" NPT WELL TEMP SEN 6"
	1	TE-6352P-1	WELL TEMP SEN 8" 1K PT
P3.3-C,-S	1	CSDSC-C50100L1	CURR SW SELF CAL CLMP
Panel Devices:			
2 DHWS-CTRL	1	MS-FEC1611-1	MS-FEC1611-1 FINAL
3 HEX3.1-CTRL	1	MS-FEC1611-1	MS-FEC1611-1 FINAL
Other Devices:			
HX3.1V-O	1	VALVE	REFER VALVE SCHEDULE

PUMP SCHEDULE

SR NO	TAG	LEVEL	LOCATION	CAPACITY (L/S)	MOTOR HP	ELECTRICAL (V/Ph/HZ)	MECH DWG.
1	PUMP P-3.3	UPPER LEVEL	MECH ROOM	0.10	0.65A	115/1/60	M603

SEQUENCE OF OPERATION:

1. DOMESTIC HOT WATER (DHWH-1,P3.3):
1. PACKAGED CONTROLS ON OIL FIRED DOMESTIC HOT WATER HEATER TO CYCLE BURNER TO SATISFY DHWH SET POINT. INITIAL SET POINT = 60 DEG C.
2. DHW TANK SUPPLY TEMPERATURE WILL BE INDICATED AT OWS
3. DHWR PUMP P-3.3 WILL BE COMMANDED FROM BAS AND RUN CONTINUOUSLY.
4.DHWH PUMP STATUS WILL BE INDICATED AT OWS. IN EVENT OF P-3.3 FAILURE AS SENSED BY CT SENSOR, FAILURE WILL BE INDICATED AT OWS
5 ALARM TROUBLE WILL BE GENERATED AT OWS IF DHW SUPPLY TEMPERATURE OVER 65 DEGC FOR 20 MINUTES.
6 DHWH WILL BE LOCKED OUT AND ALARM TROUBLE WILL BE GENERATED AT OWS IF DHWH TEMPERATURE ABOVE 70 DEG C FOR 5 MINUTES

2.DHW BOOSTER (HEX-3.1):
1. HEX-3.1 IS INSTALLED TO BOOST THE DHW TEMPERATURE TO THE PRIMARY FILTERS. THE SYSTEM INCLUDES A FLOW SWITCH, NORMAL CLOSED MODULATING TWO-WAY CONTROL VALVE AND A TEMPERATURE TRANSMITTER.
2. ON CALL FOR PRIMARY FILTER DHW BY PLC, FLOW SWITCH INSTALLED ON DHW SUPPLY PROVES DHW FLOW TO FILTERS. ON PROOF OF FLOW, NORMAL CLOSED CONTROL VALVE ENERGIZED AND MODULATES HW FLOW THROUGH HOT SIDE OF HEAT EXCHANGER TO ACHIEVE DHW SUPPLY TEMPERATURE TO PRIMARY FILTER. INITIAL SET POINT = 80 DEG C.
3. CONTROL VALVE POSITION AND DHW BOOST TEMPERATURE WILL BE INDICATED AT OWS.

NOTES:

1. DHWH AQUASTAT T7 IS PROVIDED BY OTHERS AND INTERLOCKED WITH DHWH-1 TANK.
2. REFER PANEL DETAILS ON DWG 012.001.
3. REFER PANEL DETAILS ON DWG 012.005.

IN CONSIDERATION OF THE RECEIPT OF THIS DOCUMENT, THE RECIPIENT AGREES NOT TO REPRODUCE, COPY, USE OR TRANSMIT THIS DOCUMENT AND/OR THE INFORMATION THEREIN CONTAINED, IN WHOLE OR IN PART, OR TO SUFFER SUCH ACTION BY OTHERS, FOR ANY PURPOSE, EXCEPT WITH THE ADVANCE WRITTEN PERMISSION OF JOHNSON CONTROLS, INC. AND FURTHER AGREES TO SURRENDER SAME TO JOHNSON CONTROLS, INC. UPON DEMAND.

COPYRIGHT JOHNSON CONTROLS, INC. 2018

Drawing Title: **Domestic Hot Water System Flow Diagram**

Project Title: **Iqualuit Waste Water Treatment Plant Upgrades**

Rev. No.	Rev.	Date	Rev. By	Rev. Description
2		10/11/2018	SH	Re-Submittal
1		07/23/2018	SH	Submittal

Account Executive	Project Owner	Drawn Designer	Drawn By	Drawing Date	Approved By	Approval Date
G. D. Montigny	Philippe Cemosek	CoEE	SH	07/23/2018		

Johnson Controls

Branch Information
Johnson Controls Ltd.
1375 Rue Frank-Carrel
Ville de Québec, QC G1N 2E7
Phone: 418-681-7958

Contract Number: **8N0Y-0079**

Drawing Number: **004.001**

1/0.100.192.72\Field Engineering\NA\CANADA-HOUSTON\FY-18\PFM\8N0Y0079\Drawings\Domestic Hot Water System Flow Diagram.vsd

Electrician/Fitter		Point Information			Controller Information					Panel Information				Intermediate Device				Field Device				
Tag	Point Type	System Name	Object Name	Expanded ID	Controller Details	Trunk Type	Trunk Nbr	Trunk Addr.	Cable Destination Bay/Terminal	Termination Out	Panel	(1) Panel Location	Reference Drawing	Cable Number	Wiring /Tubing	Termination In	Device	Termination Out	Wiring /Tubing	Termination In	Device	Ref Detail Shape	Comment
		DHWS			FEC 1611						EN-1	LOWER LVL, MECH RM	M603										Power to Controller
		DHWS			FEC 1611	MS/TP	1	5			EN-1	LOWER LVL, MECH RM	M603										BacNet FC Bus
	UI IN-1	DHWS	DHWS-T	Domestic Water Supply Temp	FEC 1611	MS/TP	1	5	UI IN-1	IN1, ICOM1	EN-1	LOWER LVL, MECH RM	M603	1-5-UI IN-1					2/22	2-Wire	TE	F131	
	UI IN-2	DHWS	DHWR-T	Domestic Water Return Temp	FEC 1611	MS/TP	1	5	UI IN-2	IN2, ICOM2	EN-1	LOWER LVL, MECH RM	M603	1-5-UI IN-2					2/22	2-Wire	TE	F131	
	BI IN-3	DHWS	P3.3-S	Pump 3.3 Status	FEC 1611	MS/TP	1	5	BI IN-3	IN3, ICOM3	EN-1	LOWER LVL, MECH RM	M603	1-5-BI IN-3	2/22	OUT, COM	Current Relay	Motor Lead	Motor Lead	See wiring detail	Motor Status (Contact)	F301	
	BO OUT-1	DHWS	P3.3-C	Pump 3.3 Command	FEC 1611	MS/TP	1	5	BO OUT-1	OUT1, 24V COM	EN-1	LOWER LVL, MECH RM	M603	1-5-BO OUT-1	2/22	COIL-,COIL+	Relay	COM, NO	2/14	See wiring detail	Starter (w/o Safeties) (Sw Hi, EXT)	F1015	
	BO OUT-2	DHWS			FEC 1611	MS/TP	1	5	BO OUT-2		EN-1	LOWER LVL, MECH RM	M603	1-5-BO OUT-2									
	BO OUT-3	DHWS			FEC 1611	MS/TP	1	5	BO OUT-3		EN-1	LOWER LVL, MECH RM	M603	1-5-BO OUT-3									
	CO OUT-4	DHWS			FEC 1611	MS/TP	1	5	CO OUT-4		EN-1	LOWER LVL, MECH RM	M603	1-5-CO OUT-4									
	CO OUT-5	DHWS			FEC 1611	MS/TP	1	5	CO OUT-5		EN-1	LOWER LVL, MECH RM	M603	1-5-CO OUT-5									
	CO OUT-6	DHWS			FEC 1611	MS/TP	1	5	CO OUT-6		EN-1	LOWER LVL, MECH RM	M603	1-5-CO OUT-6									
	CO OUT-7	DHWS			FEC 1611	MS/TP	1	5	CO OUT-7		EN-1	LOWER LVL, MECH RM	M603	1-5-CO OUT-7									

Electrician/Fitter		Point Information			Controller Information					Panel Information				Intermediate Device				Field Device				
Tag	Point Type	System Name	Object Name	Expanded ID	Controller Details	Trunk Type	Trunk Nbr	Trunk Addr.	Cable Destination Bay/Terminal	Termination Out	Panel	(1) Panel Location	Reference Drawing	Cable Number	Wiring /Tubing	Termination In	Device	Termination Out	Location	Wiring /Tubing	Termination In	Device	Ref Detail Shape	Comment
		HEX3.1			FEC 1611						EN-5	UPPER HEADWORKS	M603										Power to Controller
		HEX3.1			FEC 1611	MS/TP	1	16			EN-5	UPPER HEADWORKS	M603										BacNet FC Bus
	UI IN-1	HEX3.1	HX3.1-DHWB-T	HX 3.1 DHW Boost Temp	FEC 1611	MS/TP	1	16	UI IN-1	IN1, ICOM1	EN-5	UPPER HEADWORKS	M603	5-16-UI IN-1						2/22	2-Wire	TE	F131	
	UI IN-2	HEX3.1	HX3.1V-POS	Heat Exch 3.1 Vlv Position	FEC 1611	MS/TP	1	16	UI IN-2	IN2, ICOM2	EN-5	UPPER HEADWORKS	M603	5-16-UI IN-2						2/22	ORG, BLK	M92xx-GGx FB (Vdc)	F168	
	BI IN-3	HEX3.1	HX3.1-DHWB-FS	HX 3.1 DHW Flow Switch	FEC 1611	MS/TP	1	16	BI IN-3	IN3, ICOM3	EN-5	UPPER HEADWORKS	M603	5-16-BI IN-3						2/22	See wiring detail	Dry Contact	F301	
BLDG-LT3	BO OUT-1	HEX3.1	HEATSYS-FAIL	Heating System Fail Alarm Enable	FEC 1611	MS/TP	1	16	BO OUT-1	OUT1, 24V COM	EN-5	UPPER HEADWORKS	M603	5-16-BO OUT-1						2/18	See wiring detail	24VAC OUT (Sw Hi, EXT Source)	F501	REFER DWG 011.002
BLDG-LT3	BO OUT-2	HEX3.1	ALRM-LT	Light Alarm Enable	FEC 1611	MS/TP	1	16	BO OUT-2	OUT2, 24V COM	EN-5	UPPER HEADWORKS	M603	5-16-BO OUT-2						2/18	See wiring detail	24VAC OUT (Sw Hi, EXT Source)	F501	REFER DWG 011.002
	BO OUT-3	HEX3.1			FEC 1611	MS/TP	1	16	BO OUT-3		EN-5	UPPER HEADWORKS	M603	5-16-BO OUT-3										
	CO OUT-4	HEX3.1	HX3.1V-O	Heat Exch 3.1 Vlv Output	FEC 1611	MS/TP	1	16	CO OUT-4	OUT4, OCOM4,24VAC, COM	EN-5	UPPER HEADWORKS	M603	5-16-CO OUT-4						2/22 / 2/18	GRY, BLK/BLK, RED	M92xx-GGx-x (Vdc) (Ext Source)	F267	
HEAT VENT	CO OUT-5	HEX3.1	HTVENT-VLV	Heat Vent Trace Valve Command	FEC 1611	MS/TP	1	16	CO OUT-5	OUT5, 24V COM	EN-5	UPPER HEADWORKS	M603	5-16-CO OUT-5	2/22	COIL+,COIL-	Relay	COM,NO		2/22	RED, BLK	M92xx-BGx-x (On-Off) (Sw Hi, EXT Source)	F978	REFER DWG 010.002
	CO OUT-6	HEX3.1			FEC 1611	MS/TP	1	16	CO OUT-6		EN-5	UPPER HEADWORKS	M603	5-16-CO OUT-6										
	CO OUT-7	HEX3.1			FEC 1611	MS/TP	1	16	CO OUT-7		EN-5	UPPER HEADWORKS	M603	5-16-CO OUT-7										
BLDG-LT3		HEX3.1			NET STAT						EN-5	UPPER HEADWORKS	M603										
BLDG-LT3		HEX3.1			NET STAT	SA Bus	1	200			EN-5	UPPER HEADWORKS	M603										BacNet SA Bus
BLDG-LT3	STAT	HEX3.1	ZN-T, -SP	Zone Temperature, Setpoint	NET STAT	SA Bus	1	200	STAT	+,-,COM,SA PWR	EN-5	UPPER HEADWORKS	M603	16-5-200-STAT						4/22	+,-,COM,SA PWR	NetSensor (Term,Addressable)	NS102	REFER DWG 011.002

DETAIL F131 TEMPERATURE SENSOR INPUT

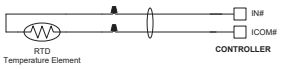

DETAIL F301 BINARY INPUT (DRY CONTACT)

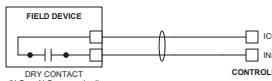

DETAIL F501 24 VAC BINARY OUTPUT (Switch High, EXT Sourced)

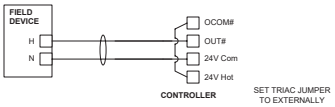

SET TRIAC JUMPER TO EXTERNALLY SOURCED (EXT) FOR ASSOCIATED BINARY OUTPUT(S).

DETAIL F267 0-10VDC OUTPUT to M92xx-GGx and HGx or VA92xx-GGx and HGx

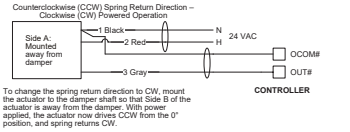

To change the spring return direction to CW, mount the actuator to the damper shaft so that Side B of the actuator is away from the damper. With power applied, the actuator now drives CCW from the 0° position, and spring returns CW.

DETAIL F1015 Starter without Safeties Wiring

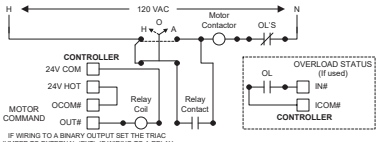

IF WIRING TO A BINARY OUTPUT SET THE TRIAC JUMPER TO EXTERNAL (EXT). IF WIRING TO A RELAY OUTPUT TERMINAL OUT# = OUT# NO.

DETAIL F168 M92xx-GGx-x/HGx-x and VA92xx-GGx-x/HGx-x VOLTAGE FEEDBACK

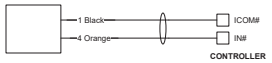

DETAIL NS102 NET STAT WITH TERMINALS ADDRESSABLE

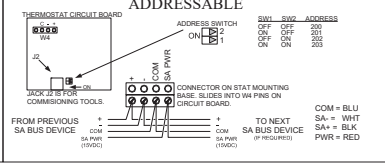

COM = BLU
SA- = WHT
SA+ = BLK
PWR = RED

DETAIL F978 ON-OFF CONTROL to M92xx-BGx-x and VA92xx-BGx-x (Switch High, EXT Sourced)

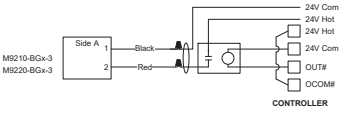

NOTE:

(1) FIELD TO VERIFY EXACT LOCATION TO INSTALL PANEL.

IN CONSIDERATION OF THE RECEIPT OF THIS DOCUMENT, THE RECIPIENT AGREES NOT TO REPRODUCE, COPY, USE OR TRANSMIT THIS DOCUMENT AND/OR THE INFORMATION THEREIN CONTAINED, IN WHOLE OR IN PART, OR TO SUFFER SUCH ACTION BY OTHERS, FOR ANY PURPOSE, EXCEPT WITH THE ADVANCE WRITTEN PERMISSION OF JOHNSON CONTROLS, INC. AND FURTHER AGREES TO SURRENDER SAME TO JOHNSON CONTROLS, INC. UPON DEMAND.

COPYRIGHT JOHNSON CONTROLS, INC. 2018

Drawing Title
Domestic Hot Water System Hardware Schedule & Wiring Details

Project Title
Iqaluit Waste Water Treatment Plant Upgrades

No.	Rev.	Date	By	Description
1	1	07/23/2018	SH	Submittal

Account Executive	Project Owner	System Designer	Drawn By	Drawing Date	Approved By	Approval Date
G. D. Montigny	Philippe Cernosek	CoEE	SH	07/23/2018		

Johnson Controls

Branch Information
Johnson Controls Ltd.
1375 Rue Frank-Carrel
Ville de Québec, QC G1N 2E7
Phone: 418-681-7958

Contract Number: 8N0Y-0079

Drawing Number: 004.002

H:\8N0Y\0079\Drawings\Domestic Hot Water System Hardware Schedule & Wiring Details.vsd

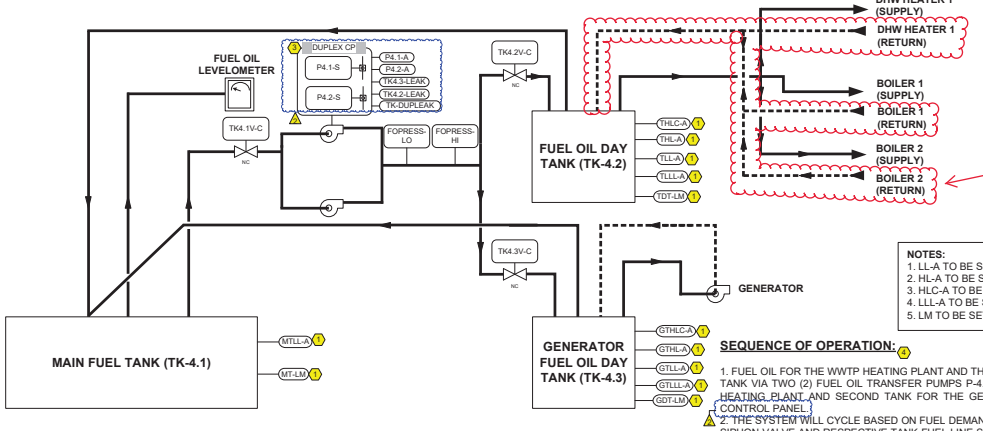

No return from burners to day tank. Each burner has a fuel oil de-aerator (Tigerloop)

BILL OF MATERIALS

Tag	Qty	Part Number	Description
Field Devices:			
FOPRESS-HI	1	F261MAH-V01C	LUBRICANT OIL FLOW SWITCH
FOPRESS-LO	1	F261MAL-V01C	LUBRICANT OIL FLOW SWITCH
Px-S	2	CSDSC-CS010GLB	CURR SW SELF CAL CLMP
Panel Devices:			
FUEL-CTRL	1	MS-FEC2611-0	FEC2611-0,FEC17
FUEL-IOM4	1	MS-IOM3721-0	MS-IOM3721-0,IN/PUT
Other Devices:			
TKxV-C	3	VALVE	REFER VALVE SCHEDULE

NOTES:
1. LL-A TO BE SET AT 25% OF TANK VOLUME.
2. HL-A TO BE SET AT 95% OF TANK VOLUME.
3. HLC-A TO BE SET AT 90% OF TANK VOLUME.
4. LLL-A TO BE SET AT 50% OF TANK VOLUME.
5. LM TO BE SET AT 30% OF TANK VOLUME.

ZONE CLASSIFICATION AREA: LOWER LEVEL, NORMAL AREA

PUMP SCHEDULE

SR NO	TAG	LEVEL	LOCATION	CAPACITY (L/S)	MOTOR HP	ELECTRICAL (V/Ph/HZ)	MECH DWG.
1	PUMP P-4.1	LOWER LEVEL	GRID B: 5-6	3.4	1/2	115/1/60	M604
2	PUMP P-4.2	LOWER LEVEL	GRID B: 5-6	0.21	1/2	115/1/60	M604

SEQUENCE OF OPERATION: (4)

1. FUEL OIL FOR THE WWTP HEATING PLANT AND THE GENERATOR IS TRANSFERRED FROM A SINGLE ABOVE GROUND PRIMARY FUEL OIL TANK VIA TWO (2) FUEL OIL TRANSFER PUMPS P-4.1 AND P-4.2 TO TWO (2) FUEL OIL AUXILIARY DAY TANKS (TK-4.2 & TK-4.3) ONE FOR HEATING PLANT AND SECOND TANK FOR THE GENERATOR. TRANSFER PUMPS P-4.1 AND P-4.2 WILL BE CONTROLLED BY ITS OWN CONTROL PANEL.
2. THE SYSTEM WILL CYCLE BASED ON FUEL DEMAND OF EITHER OF THE TWO FUEL OIL DAY TANKS. UPON SYSTEM START UP, THE ANTI-SIPHON VALVE AND RESPECTIVE TANK FUEL LINE SOLENOID VALVES OPEN. *THE LEAD PUMP WILL OPERATE CONTINUOUSLY WITH AUTO TRANSFER ON LEAD PUMP FAILURE BY TRANSFER PUMP CONTROL PANEL. IF FUEL DEMAND CANNOT BE MET AFTER MORE THAN 15 MIN, CONTROL PANEL WILL ENABLE THE SECOND FUEL OIL PUMP.* ONCE THE FUEL LOAD IS MET, *DISABLE THE PUMPS* & CLOSE ANTI-SIPHON VALVE AND TANK FUEL LINE SOLENOID VALVES.
3. *THE FUEL OIL TRANSFER PUMPS OPERATE AS LEAD/LAG WITH THE PUMPS ALTERNATING AFTER EACH DUTY CYCLE.*
4. THE FUEL OIL PUMP STATUS IS TO BE MONITORED ON THE BAS AND IN EVENT OF LEAD PUMP FAILURE AUTOCHANGE TO THE LAG PUMP AND ALARM FAILURE TO THE OWS.
5. IF BOTH THE LEAD AND LAG PUMPS FAIL (INIDCATED BY STATUS), ALARM WILL BE GENERATED TO THE OWS AND ALARM WILL BE SENT TO PROCESS CONTROL PLC.
6. IF THE SECOND TANK LEVEL CONTROL CALLS FOR FUEL WHILE THE LEAD PUMP IS ALREADY ON, DELAY SECOND TANK FILL OPERATION UNTIL FIRST TANK FILL COMPLETE. FUEL OIL TRANSFER PUMP OFF WHEN ALL THE TANK LEVELS SATISFIED.
7. ON HIGH FUEL OIL LEVEL AT ANY DAY TANK, A HARDWIRED OVERRIDE WILL SHUT THE TRANSFER PUMPS OFF. THE PUMPS WILL NOT RESTART UNTIL THE HIGH LIMIT CONDITION IS CORRECTED.
8. ON LOW OR HIGH FUEL OIL LEVEL A CRITICAL ALARM WILL BE GENERATED. ALARM CONDITIONS WILL BE MONITORED BY THE PROCESS CONTROL PLC.
9. IN EVENT OF FUEL LEAK AT EITHER AUXILIARY DAY TANK AS SENSED BY LEAK DETECTION DEVICE, ALARM TROUBLE AT OWS.

MONITORING POINTS FROM BAS:
I. TRANSFER PUMPS STATUS (Px-S)
II. FO PUMP HIGH PRESSURE SWITCH (FOPRESS-HI)
III. FO PUMP LOW PRESSURE SWITCH (FOPRESS-LO)
IV. LEAK DETECTION ALARM SIGNAL FOR TANK TK-4.2
V. LEAK DETECTION ALARM SIGNAL FOR TANK TK-4.3
VI. LEA DETECTION ALARM SIGNALL FOR DUPLEX SYSTEM.

NOTES:

(1) FUEL TANK LEVEL SWITCHES ARE PROVIDED BY OTHERS, BAS WILL MONITOR THE STATUS THROUGH LEVEL SWITCH DRY CONTACT.

(2) REFER PANEL DETAILS ON DWG 012.002.

(3) FUEL OIL TRANSFER PUMP WILL BE CONTROLLED BY ITS OWN CONTROL PANEL (I.E. DUPLEX CONTROL PANEL). BAS WILL ONLY MONITOR THE STATUS OF THE TRANSFER PUMPS. AND ALARMS

(4) SEQUENCE PROVIDED IN ITALIC IS CONTROLLED BY UNIT CONTROL PANEL.

IN CONSIDERATION OF THE RECEIPT OF THIS DOCUMENT, THE RECIPIENT AGREES NOT TO REPRODUCE, COPY, USE OR TRANSMIT THIS DOCUMENT AND/OR THE INFORMATION THEREIN CONTAINED, IN WHOLE OR IN PART, OR TO SUFFER SUCH ACTION BY OTHERS, FOR ANY PURPOSE, EXCEPT WITH THE ADVANCE WRITTEN PERMISSION OF JOHNSON CONTROLS, INC. AND FURTHER AGREES TO SURRENDER SAME TO JOHNSON CONTROLS, INC. UPON DEMAND.

COPYRIGHT JOHNSON CONTROLS, INC. 2018

Drawing Title: **Fuel Tank System Flow Diagram**

Project Title: **Iqualuit Waste Water Treatment Plant Upgrades**

Rev. No.	Rev. Date	Rev. By	Rev. Description
2	10/11/2018	SH	Re-Submittal
1	07/23/2018	SH	Submittal

Account Executive	Project Owner	Drawn Designer	Drawn By	Drawing Date	Approved By	Approval Date
G. D. Montigny	Philippe Cemosek	CoEE	SH	07/23/2018		

Johnson Controls

Branch Information
Johnson Controls Ltd.
1375 Rue Frank-Carrel
Ville de Québec, QC G1N 2E7
Phone: 418-681-7958

Contract Number: **8N0Y-0079**

Drawing Number: **005.001**

110.109.192.72\Field Engineering\NA\CANADA-HOUSTON\FY-18\PFM\8N0Y0079\Drawings\Fuel Tank System Flow Diagram.vsd

Electrician/Fitter	Point Information				Controller Information						Panel Information				Intermediate Device				Field Device				
Tag	Point Type	System Name	Object Name	Expanded ID	Controller Details	Trunk Type	Trunk Nbr	Trunk Addr.	Cable Destination Bay/Terminal	Termination Out	Panel	(1) Panel Location	Reference Drawing	Cable Number	Wiring /Tubing	Termination In	Device	Termination Out	Wiring /Tubing	Termination In	Device	Ref Detail Shape	Comment
		FUEL			FEC 2611						EN-2	GENERATOR RM 112	M604										
		FUEL			FEC 2611	MS/TP	1	6			EN-2	GENERATOR RM 112	M604										BacNet FC Bus
	UI IN-1	FUEL	MTLL-A	Main Tank Low Level Alarm	FEC 2611	MS/TP	1	6	UI IN-1	IN1, ICOM1	EN-2	GENERATOR RM 112	M604	2-6-UI IN-1					2/22	See wiring detail	Dry Contact	F301	
	UI IN-2	FUEL	MT-LM	Main Tank Leak Monitoring	FEC 2611	MS/TP	1	6	UI IN-2	IN2, ICOM2	EN-2	GENERATOR RM 112	M604	2-6-UI IN-2					2/22	See wiring detail	Dry Contact	F301	
	UI IN-3	FUEL	FOPRESS-HI	FO Pump High Pressure Switch	FEC 2611	MS/TP	1	6	UI IN-3	IN3, ICOM3	EN-2	GENERATOR RM 112	M604	2-6-UI IN-3					2/22	See wiring detail	Dry Contact	F301	
	UI IN-4	FUEL	FOPRESS-LO	FO Pump Low Pressure Switch	FEC 2611	MS/TP	1	6	UI IN-4	IN4, ICOM4	EN-2	GENERATOR RM 112	M604	2-6-UI IN-4					2/22	See wiring detail	Dry Contact	F301	
	UI IN-5	FUEL	P4.1-A	Pump 4.1 Alarm	FEC 2611	MS/TP	1	6	UI IN-5	IN5, ICOM5	EN-2	GENERATOR RM 112	M604	2-6-UI IN-5					2/22	See wiring detail	Dry Contact	F301	
	UI IN-6	FUEL	P4.2-A	Pump 4.2 Alarm	FEC 2611	MS/TP	1	6	UI IN-6	IN6, ICOM6	EN-2	GENERATOR RM 112	M604	2-6-UI IN-6					2/22	See wiring detail	Dry Contact	F301	
	BI IN-7	FUEL	P4.1-S	Pump 4.1 Status	FEC 2611	MS/TP	1	6	BI IN-7	IN7, ICOM7	EN-2	GENERATOR RM 112	M604	2-6-BI IN-7	2/22	OUT, COM	Current Relay	Motor Lead	Motor Lead	See wiring detail	Motor Status (Contact)	F301	
	BI IN-8	FUEL	P4.2-S	Pump 4.2 Status	FEC 2611	MS/TP	1	6	BI IN-8	IN8, ICOM8	EN-2	GENERATOR RM 112	M604	2-6-BI IN-8	2/22	OUT, COM	Current Relay	Motor Lead	Motor Lead	See wiring detail	Motor Status (Contact)	F301	
	BO OUT-1	FUEL			FEC 2611	MS/TP	1	6	BO OUT-1		EN-2	GENERATOR RM 112	M604	2-6-BO OUT-1									
	BO OUT-2	FUEL			FEC 2611	MS/TP	1	6	BO OUT-2		EN-2	GENERATOR RM 112	M604	2-6-BO OUT-2									
	BO OUT-3	FUEL			FEC 2611	MS/TP	1	6	BO OUT-3		EN-2	GENERATOR RM 112	M604	2-6-BO OUT-3									
	CO OUT-4	FUEL	TK4.3V-C	Tank 4.3 Vlv Command	FEC 2611	MS/TP	1	6	CO OUT-4	OUT4, 24V COM	EN-2	GENERATOR RM 112	M604	2-6-CO OUT-4	2/22	COIL+,COIL-	Relay	COM,NO	2/22	RED, BLK	M92xx-BGx-x (On-Off) (Sw Hi, EXT Source)	F978	
	CO OUT-5	FUEL	TK4.2V-C	Tank 4.2 Vlv Command	FEC 2611	MS/TP	1	6	CO OUT-5	OUT5, 24V COM	EN-2	GENERATOR RM 112	M604	2-6-CO OUT-5	2/22	COIL+,COIL-	Relay	COM,NO	2/22	RED, BLK	M92xx-BGx-x (On-Off) (Sw Hi, EXT Source)	F978	
	CO OUT-6	FUEL	TK4.1V-C	Tank 4.1 Vlv Command	FEC 2611	MS/TP	1	6	CO OUT-6	OUT6, 24V COM	EN-2	GENERATOR RM 112	M604	2-6-CO OUT-6	2/22	COIL+,COIL-	Relay	COM,NO	2/22	RED, BLK	M92xx-BGx-x (On-Off) (Sw Hi, EXT Source)	F978	
	CO OUT-7	FUEL			FEC 2611	MS/TP	1	6	CO OUT-7		EN-2	GENERATOR RM 112	M604	2-6-CO OUT-7									
	AO OUT-8	FUEL			FEC 2611	MS/TP	1	6	AO OUT-8		EN-2	GENERATOR RM 112	M604	2-6-AO OUT-8									
	AO OUT-9	FUEL			FEC 2611	MS/TP	1	6	AO OUT-9		EN-2	GENERATOR RM 112	M604	2-6-AO OUT-9									
		FUEL			IOM 3721						EN-2	GENERATOR RM 112	M604										Power to Controller
		FUEL			IOM 3721	SA Bus	1	4			EN-2	GENERATOR RM 112	M604										BacNet SA Bus
	BI IN-1	FUEL	THL-A	Tank High Level Alarm	IOM 3721	SA Bus	1	4	BI IN-1	IN1, ICOM1	EN-2	GENERATOR RM 112	M604	6-2-4-BI IN-1					2/22	See wiring detail	Dry Contact	F301	
	BI IN-2	FUEL	THLC-A	Tank High Level Cut off Alarm	IOM 3721	SA Bus	1	4	BI IN-2	IN2, ICOM2	EN-2	GENERATOR RM 112	M604	6-2-4-BI IN-2					2/22	See wiring detail	Dry Contact	F301	
	BI IN-3	FUEL	TLL-A	Tank Low Level Alarm	IOM 3721	SA Bus	1	4	BI IN-3	IN3, ICOM3	EN-2	GENERATOR RM 112	M604	6-2-4-BI IN-3					2/22	See wiring detail	Dry Contact	F301	
	BI IN-4	FUEL	TLLL-A	Tank Low Low Level Alarm	IOM 3721	SA Bus	1	4	BI IN-4	IN4, ICOM4	EN-2	GENERATOR RM 112	M604	6-2-4-BI IN-4					2/22	See wiring detail	Dry Contact	F301	
	BI IN-5	FUEL	TDTLM	Tank drip tray Leak Monitoring	IOM 3721	SA Bus	1	4	BI IN-5	IN5, ICOM5	EN-2	GENERATOR RM 112	M604	6-2-4-BI IN-5					2/22	See wiring detail	Dry Contact	F301	
	BI IN-6	FUEL	GTLLL-A	Generator Tank Low Low Level Alarm	IOM 3721	SA Bus	1	4	BI IN-6	IN6, ICOM6	EN-2	GENERATOR RM 112	M604	6-2-4-BI IN-6					2/22	See wiring detail	Dry Contact	F301	
	BI IN-7	FUEL	GDT-LM	Generator Tank drip tray Leak Monitoring	IOM 3721	SA Bus	1	4	BI IN-7	IN7, ICOM7	EN-2	GENERATOR RM 112	M604	6-2-4-BI IN-7					2/22	See wiring detail	Dry Contact	F301	
	BI IN-8	FUEL	GTLL-A	Generator Tank Low Level Alarm	IOM 3721	SA Bus	1	4	BI IN-8	IN8, ICOM8	EN-2	GENERATOR RM 112	M604	6-2-4-BI IN-8					2/22	See wiring detail	Dry Contact	F301	
	BI IN-9	FUEL	GTHL-A	Generator Tank High Level Alarm	IOM 3721	SA Bus	1	4	BI IN-9	IN9, ICOM9	EN-2	GENERATOR RM 112	M604	6-2-4-BI IN-9					2/22	See wiring detail	Dry Contact	F301	
	BI IN-10	FUEL	GTHLC-A	Generator Tank High Level Cut Off Alarm	IOM 3721	SA Bus	1	4	BI IN-10	IN10, ICOM10	EN-2	GENERATOR RM 112	M604	6-2-4-BI IN-10					2/22	See wiring detail	Dry Contact	F301	
	BI IN-11	FUEL	TK4.3V-S	Tank 4.3 Vlv Status	IOM 3721	SA Bus	1	4	BI IN-11	IN11, ICOM11	EN-2	GENERATOR RM 112	M604	6-2-4-BI IN-11					2/22	See wiring detail	M92xx-xxx-x EndSwitch	F365	
	BI IN-12	FUEL	TK4.2V-S	Tank 4.2 Vlv Status	IOM 3721	SA Bus	1	4	BI IN-12	IN12, ICOM12	EN-2	GENERATOR RM 112	M604	6-2-4-BI IN-12					2/22	See wiring detail	M92xx-xxx-x EndSwitch	F365	
	BI IN-13	FUEL	TK4.1V-S	Tank 4.1 Vlv Status	IOM 3721	SA Bus	1	4	BI IN-13	IN13, ICOM13	EN-2	GENERATOR RM 112	M604	6-2-4-BI IN-13					2/22	See wiring detail	M92xx-xxx-x EndSwitch	F365	
	BI IN-14	FUEL	TK4.3-LEAK	Tank 4.3 Leak Detection	IOM 3721	SA Bus	1	4	BI IN-14	IN14, ICOM14	EN-2	GENERATOR RM 112	M604	6-2-4-BI IN-14					2/22	See wiring detail	Dry Contact	F301	
	BI IN-15	FUEL	TK4.2-LEAK	Tank 4.2 Leak Detection	IOM 3721	SA Bus	1	4	BI IN-15	IN15, ICOM15	EN-2	GENERATOR RM 112	M604	6-2-4-BI IN-15					2/22	See wiring detail	Dry Contact	F301	
	BI IN-16	FUEL	TK-DUPLEAK	Tank Duplex System Leak Detection	IOM 3721	SA Bus	1	4	BI IN-16	IN16, ICOM16	EN-2	GENERATOR RM 112	M604	6-2-4-BI IN-16					2/22	See wiring detail	Dry Contact	F301	

DETAIL F301 BINARY INPUT (DRY CONTACT)

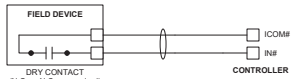

DETAIL F978 ON-OFF CONTROL to M92xx-BGx-x and VA92xx-BGx-x (Switch High, EXT Sourced)

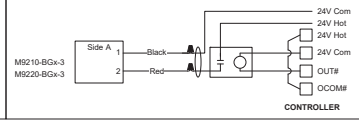

DETAIL F365 BINARY INPUT from M92xx-xxx-x, and VA92xx-xxx-x

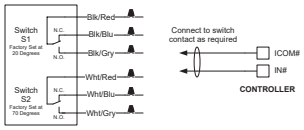

NOTE:

(1) FIELD TO VERIFY EXACT LOCATION TO INSTALL PANEL.

IN CONSIDERATION OF THE RECEIPT OF THIS DOCUMENT, THE RECIPIENT AGREES NOT TO REPRODUCE, COPY, USE OR TRANSMIT THIS DOCUMENT AND/OR THE INFORMATION THEREIN CONTAINED, IN WHOLE OR IN PART, OR TO SUFFER SUCH ACTION BY OTHERS, FOR ANY PURPOSE, EXCEPT WITH THE ADVANCE WRITTEN PERMISSION OF JOHNSON CONTROLS, INC. AND FURTHER AGREES TO SURRENDER SAME TO JOHNSON CONTROLS, INC. UPON DEMAND.

COPYRIGHT JOHNSON CONTROLS, INC. 2018

Drawing Title
Fuel Tank System Hardware Schedule & Wiring Details

Project Title
Iqualuit Waste Water Treatment Plant Upgrades

2	10/11/2018	SH	Re-Submittal	
1	07/23/2018	SH	Submittal	

Account Executive	Project Owner	System Designer	Drawn By	Drawing Date	Approved By	Approval Date
G. D. Montigny	Philippe Cernosek	CoEE	SH	07/23/2018		

Johnson Controls

Branch Information
Johnson Controls Ltd.
1375 Rue Frank-Carrel
Ville de Québec, QC G1N 2E7
Phone: 418-681-7958

Contract Number **8N0Y-0079**

Drawing Number **005.002**

1/10.109.192.72/Field Engineering/MA/CANADA-HOUSTON/FY-18/PRIMIN/0107/Drawings/Fuel Tank System Hardware Schedule & Wiring Details.vsd

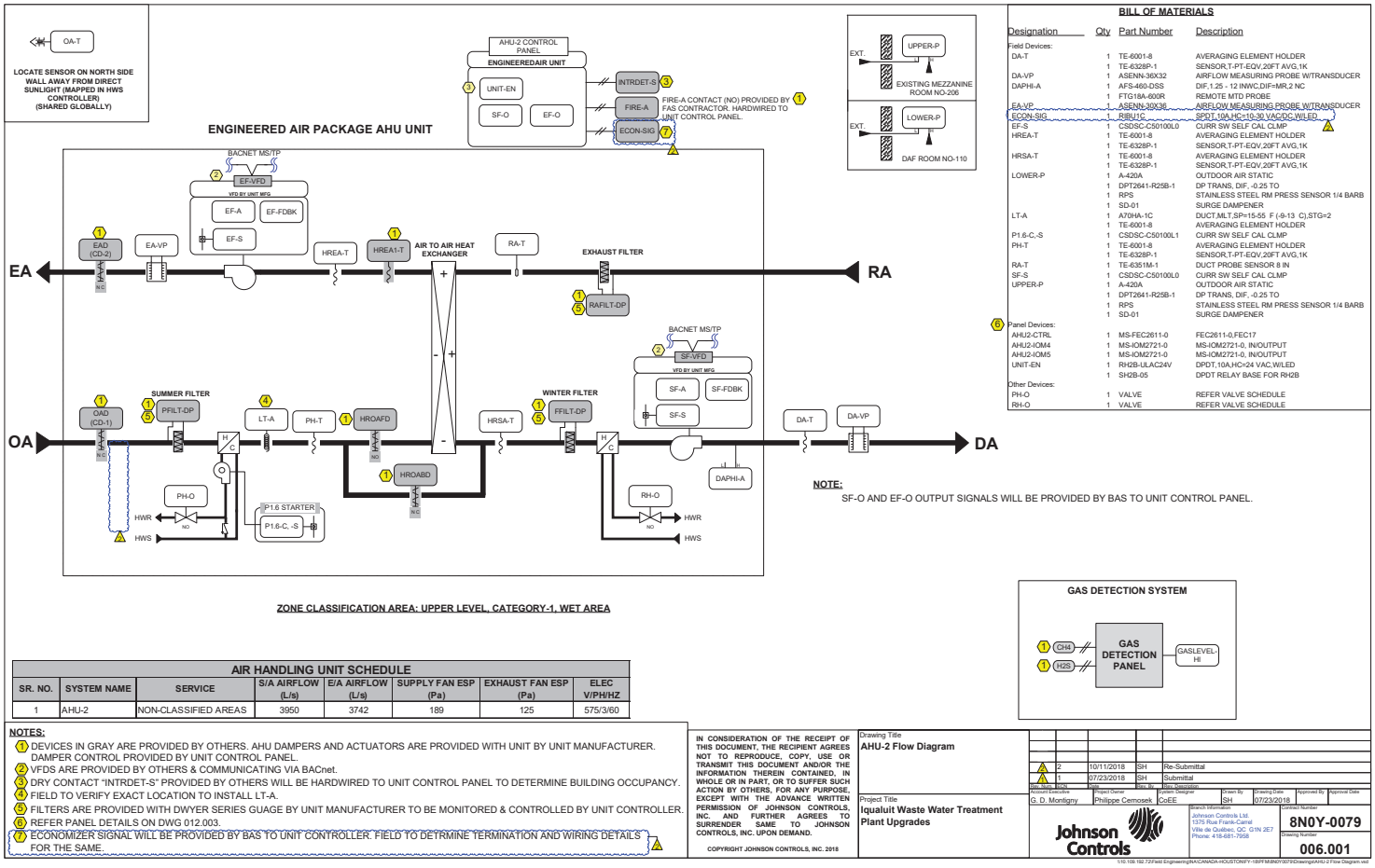

ZONE CLASSIFICATION AREA: UPPER LEVEL, CATEGORY-1, WET AREA

BILL OF MATERIALS

Designation	Qty	Part Number	Description
Field Devices:			
DA-T	1	TE-6001-8	AVERAGING ELEMENT HOLDER
	1	TE-6328P-1	SENSOR,T-PT-EQV,20FT AVG,1K
DA-VP	1	ASENN-36X32	AIRFLOW MEASURING PROBE W/TRANSDUCER
DAPHI-A	1	AFS-460-DSS	DIF,1.25 - 12 INWC,DIF=MR,2 NC
	1	FTG18A-600R	REMOTE MTD PROBE
EA-VP	1	ASENN-30X36	AIRFLOW MEASURING PROBE W/TRANSDUCER
ECON-SIG	1	RIBU1C	SPDT,10A,HC=10-30 VAC/DC,W/LED
EF-S	1	CSDSC-C50100L0	CURR SW SELF CAL CLMP
HREA-T	1	TE-6001-8	AVERAGING ELEMENT HOLDER
	1	TE-6328P-1	SENSOR,T-PT-EQV,20FT AVG,1K
HRSA-T	1	TE-6001-8	AVERAGING ELEMENT HOLDER
	1	TE-6328P-1	SENSOR,T-PT-EQV,20FT AVG,1K
LOWER-P	1	A-420A	OUTDOOR AIR STATIC
	1	DPT2641-R25B-1	DP TRANS, DIF, -0.25 TO
	1	RPS	STAINLESS STEEL RM PRESS SENSOR 1/4 BARB
	1	SD-01	SURGE DAMPENER
LT-A	1	A70HA-1C	DUCT,MLT,SP=15.55 F (-9-13 C),STG=2
	1	TE-6001-8	AVERAGING ELEMENT HOLDER
P1.6-C,-S	1	CSDSC-C50100L1	CURR SW SELF CAL CLMP
PH-T	1	TE-6001-8	AVERAGING ELEMENT HOLDER
	1	TE-6328P-1	SENSOR,T-PT-EQV,20FT AVG,1K
RA-T	1	TE-6351M-1	DUCT PROBE SENSOR 8 IN
SF-S	1	CSDSC-C50100L0	CURR SW SELF CAL CLMP
UPPER-P	1	A-420A	OUTDOOR AIR STATIC
	1	DPT2641-R25B-1	DP TRANS, DIF, -0.25 TO
	1	RPS	STAINLESS STEEL RM PRESS SENSOR 1/4 BARB
	1	SD-01	SURGE DAMPENER
6 Panel Devices:			
AHU2-CTRL	1	MS-FEC2611-0	FEC2611-0,FEC17
AHU2-IOM4	1	MS-IOM2721-0	MS-IOM2721-0, IN/OUTPUT
AHU2-IOM5	1	MS-IOM2721-0	MS-IOM2721-0, IN/OUTPUT
UNIT-EN	1	RH2B-ULAC24V	DPDT,10A,HC=24 VAC,W/LED
	1	SH2B-05	DPDT RELAY BASE FOR RH2B
Other Devices:			
PH-O	1	VALVE	REFER VALVE SCHEDULE
RH-O	1	VALVE	REFER VALVE SCHEDULE

AIR HANDLING UNIT SCHEDULE

SR. NO.	SYSTEM NAME	SERVICE	S/A AIRFLOW (L/s)	E/A AIRFLOW (L/s)	SUPPLY FAN ESP (Pa)	EXHAUST FAN ESP (Pa)	ELEC V/PH/HZ
1	AHU-2	NON-CLASSIFIED AREAS	3950	3742	189	125	575/3/60

NOTES:

1. DEVICES IN GRAY ARE PROVIDED BY OTHERS. AHU DAMPERS AND ACTUATORS ARE PROVIDED WITH UNIT BY UNIT MANUFACTURER. DAMPER CONTROL PROVIDED BY UNIT CONTROL PANEL.
2. VFDS ARE PROVIDED BY OTHERS & COMMUNICATING VIA BACnet.
3. DRY CONTACT "INTRDET-S" PROVIDED BY OTHERS WILL BE HARDWIRED TO UNIT CONTROL PANEL TO DETERMINE BUILDING OCCUPANCY.
4. FIELD TO VERIFY EXACT LOCATION TO INSTALL LT-A.
5. FILTERS ARE PROVIDED WITH DWYER SERIES GUAGE BY UNIT MANUFACTURER TO BE MONITORED & CONTROLLED BY UNIT CONTROLLER.
6. REFER PANEL DETAILS ON DWG 012.003.
7. ECONOMIZER SIGNAL WILL BE PROVIDED BY BAS TO UNIT CONTROLLER. FIELD TO DETRMINE TERMINATION AND WIRING DETAILS FOR THE SAME.

IN CONSIDERATION OF THE RECEIPT OF THIS DOCUMENT, THE RECIPIENT AGREES NOT TO REPRODUCE, COPY, USE OR TRANSMIT THIS DOCUMENT AND/OR THE INFORMATION THEREIN CONTAINED, IN WHOLE OR IN PART, OR TO SUFFER SUCH ACTION BY OTHERS, FOR ANY PURPOSE, EXCEPT WITH THE ADVANCE WRITTEN PERMISSION OF JOHNSON CONTROLS, INC. AND FURTHER AGREES TO SURRENDER SAME TO JOHNSON CONTROLS, INC. UPON DEMAND.

COPYRIGHT JOHNSON CONTROLS, INC. 2018

Drawing Title: **AHU-2 Flow Diagram**

Project Title: **Iqaluit Waste Water Treatment Plant Upgrades**

Mark	Num	Date	Rev. By	Description
2	2	10/11/2018	SH	Re-Submittal
1	1	07/23/2018	SH	Submittal

Account Executive	Project Owner	Drawn Designer	Drawn By	Drawing Date	Approved By	Approval Date
G. D. Montigny	Philippe Cemosek	CoEE	SH	07/23/2018		

Johnson Controls

Branch Information
Johnson Controls Ltd.
1375 Rue Frank-Carrel
Ville de Québec, QC G1N 2E7
Phone: 418-681-7958

Contract Number: **8N0Y-0079**

Drawing Number: **006.001**

SEQUENCE OF OPERATION:

GENERAL:
AHU-2 IS CUSTOM BUILT 100% OUTDOOR AIR UNIT COMPLETE WITH TWO (2) VFD TYPE FANS, AN AIR-TO-AIR FIXED PLATE HEAT EXCHANGER, FACE AND BYPASS DAMPERS, PREHEAT AND REHEAT HYDRONIC HEATING COILS AND EXHAUST AND OUTDOOR AIR DAMPERS. THE UNIT IS INSTALLED IN ABOVE THE MBBR CELLS AND PROVIDES FRESH AIR TO THE UNCLASSIFIED AREAS INCLUDING THE MBBR AND UPPER DAF TANK AREA, UPPER LEVEL MEZZANINE, BELT FILTER PRESS AREA, POLYMER MIZING AREA, PROCESS BLOWER AREA, LOWER DAF TANK AREA, AND THE SLUDGE TRAILER ROOM.

SUPPLY & EXHAUST FAN CONTROL (SF,EF):
1. AHU-2 AIR SYSTEM OPERATES CONTINUOUSLY. AHU-2 WILL NORMALLY OPERATE WITH THE SUPPLY FANS AND EXHAUST FAN AT 50% SPEED TO PROVIDE A MINIMUM OF 3 ACH OF CONTINUOUS VENTILATION.
2. WHEN THE INTRUSION DETECTION SYSTEM IS DISABLED DETECTED BY "INTRDET-S" CONTACT (I.E. WHEN BUILDING IS OCCUPIED) OR WHEN THE GAS DETECTION SYSTEM IS ACTIVATED OR WHEN THE OUTSIDE AIR TEMPERATURE (OA-T) IS ABOVE 10 DEG C, THE SUPPLY AND EXHAUST AIR FANS WILL BE RAMPED UP TO 100% TO PROVIDE 6 ACH OF CONTINUOUS VENTILATION. FINAL FAN SPEEDS (SF-O, EF-O) TO BE DETERMINED DURING COMMISSIONING.
3. PRELIMINARY CALCULATIONS INDICATE THAT THERE MAY BE CONDENSATION ISSUES AT LOWER AIR CHANGE RATES. IN THE EVENT THAT CONDENSATION IS A PROBLEM AT 3 ACH, CONTRACTOR TO RAMP UP LOWER FAN SPEED SO THAT CONDENSATION IS AVOIDED.
4. *GAS DETECTION BY PLC CONTRACTOR.* PLC I/O WILL BE INTERLOCKED WITH DDC AHU CONTROLS.
5 UNIT ON/OFF WILL BE PROVIDED BY BAS. *UPON SYSTEM ENABLE, THE UNIT OUTDOOR AIR (OAD) AND EXHAUST AIR (EAD) DAMPERS WILL BE ENERGIZED OPEN BY UNIT CONTROL PANEL.* ONCE THE DAMPERS END SWITCHES INDICATES THAT THE DAMPERS ARE OPEN SUPPLY AND EXHAUST FANS WILL BE ENABLED BY UNIT CONTROL PANEL. THE BAS WILL RUN THE SUPPLY FAN & EXHAUST FAN TO 3 ACH/ 50% AIRFLOW (SF-O, EF-O). FAN CONTROL 0-10 VDC SIGNAL IS PROVIDED BY BAS TO UNIT CONTROLLER.
6. THE BAS SYSTEM WILL MODULATE THE EXHAUST FAN (EF-O) AS REQUIRED TO MAINTAIN THE SPACE PRESSURE (UPPER-P,LOWER-P) UNDER POSITIVE PRESSURE OF 25 PA (FIELD ADJUSTABLE) RELATIVE TO AMBIENT. FINAL FAN SPEED TO BE DETERMINED DURING COMISSIONING.
7. IN EVENT OF EITHER SUPPLY FAN FAILURE (SF-A) OR EXHAUST FAN FAILURE (EF-A), ALARM TROUBLE AT OWS.
8. FAN STATUS (SF-S,EF-S) WILL BE SHOWN ON OPERATOR WORKSTATION.
9. AIR CHANGE PER HOUR (ACH) RATE WILL BE SHOWN ON OPERATOR WORKSTATION.
10. RELATIVE SPACE PRESSURE (UPPER-P,LOWER-P) WILL BE SHOWN ON OPERATOR WORKSTATION..
11. VARIOUS AIR FILTER DP (PFILT-DP,FFILT-DP,RAFILT-DP) VALUES WILL BE SHOWN ON OPERATOR WORKSTATION.

PREHEAT COIL:
1. PRE-HEAT COIL RECIRCULATION PUMP P-1.6 WILL BE ON (P1.6-C) WHEN OAT LESS THAN 5 DEC C.
2. BAS WILL MODULATE TWO WAY CONTROL VALVE (PH-O) TO MAINTAIN MINIMUM DAT SETPOINT AFTER HEAT TRANSFER CORE (HRSA-T). INITAL SETPOINT = -10C.

REHEAT COIL:
1. BAS WILL MODULATE TWO WAY CONTROL VALVE (RH-O) TO MAINTAIN SUPPLY AIR TEMPERATURE SETPOINT (DAT-SP) TO SPACE. INITAL SETPOINT = +10C.
2. LOW SUPPLY AIR TEMPERATURE ALARM: IN EVENT THAT SAT TEMPERATURE(DA-T) IS LESS THAN 5 DEG C AS SENSED BY DUCT MOUNTED TEMPERATURE SENSOR, ALARM TROUBLE AT OWS.

HRA FACE/BYPASS DAMPER CONTROL:
AHU HEAT TRANSFER CORE BYPASS DAMPERS ARE NORMALLY CLOSED (FULL HEAT RECOVERY MODE). *UNIT CONTROLLER* TO OPEN DAMPERS FULLY WHEN OAT GREATER THAN 5 DEG C (PARTIAL HEAT RECOVERY). WHEN OAT GREATER THAN 10 DEG C, CLOSE HEAT CORE FACE DAMPERS (NO HEAT RECOVERY). PROVIDE ANTI SHORT-CYCLE TIME DELAY. *UNIT CONTROL PANEL WILL MODULATE THE BYPASS DAMPER FULLY OPEN WHEN ECONOMIZER CONTACTS ARE CLOSED. ECONOMIZER CONTACTS WILL BE CLOSED BY A BAS CONTROLLER BASED ON OA-T CONDITIONS MENTIONED ABOVE.*

UNIT PROTECTION: (1)
1. DISCHARGE AIR HIGH STATIC SWITCH WILL BE MONITORED AT BAS. ALSO IT WILL BE CONNECTED TO UNIT CONTROLLER IN ORDER TO DISABLE THE SUPPLY AND EXHAUST FANS ONCE HI STATIC PRESSURE IS DETECTED. (SETPOINT DETERMINED BY TEST & BALANCE CONTRACTOR).
2. LOW TEMPERATURE ALARM (LT-A) - WHEN IN "ALARM", THE CONTROL SEQUENCE WILL STOP RUNNING, THE VALVE(S) WILL OPEN AND THE FAN(S) WILL BE DISABLED VIA A HARD WIRED SHUTDOWN CIRCUIT.
3. FIRE ALARM CONTACT WILL BE USED TO DISABLE THE FANS VIA UNIT CONTROL PANEL.

MONITORING POINTS FROM BAS:
1. OUTDOOR AIR TEMPERATURE (OA-T)
2. PRE-HEAT SUPPLY AIR TEMPERATURE (PH-T).
3. HR EXHAUST AIR TEMPERATURE (HREA-T) (MONITORING ONLY)
4. RETURN AIR TEMPERATURE (RA-T)
5. SUPPLY AIR FLOW (DA-VP)
6. EXHAUST AIR FLOW (EA-VP)
7. LOW TEMPERATURE ALARM (LT-A)
8. SUPPLY AIR TEMPERATURE (DA-T)

CONTROL PROVIDED BY UNIT CONTROL PANEL:
-ONCE BOTH THE FIRE ALARM CONTACT AND DUCT HIGH PRESSURE LIMIT ALARM CONTACTS CLOSED, SF & EF FAULT CONTACTS CLOSED, UNIT WILL BE READY FOR THE OPERATION. (1)
-ONCE UNIT IS ENABLED BY BAS, THE UNIT OUTDOOR AIR (OAD) AND EXHAUST AIR (EAD) DAMPERS WILL BE ENERGIZED OPEN BY UNIT CONTROL PANEL. ONCE THE DAMPERS END SWITCHES INDICATES THAT THE DAMPERS ARE OPEN, THE AHU CONTROL PANEL WILL ENABLE THE SUPPLY AND EXHAUST FANS TO RUN CONTINUOULSY. SUPPLY AND EXHAUST FAN SPEED SIGNALS WILL BE PROVIDED BY BAS TO UNIT CONTROL PANEL. FAN VFDS WILL OPERATE ACCORDINGLY VIA UNIT CONTROL PANEL.
-THE UNIT CONTROL PANEL WILL MODULATE HRA FACE & BYPASS DAMPERS TO MAINTAIN THE HEAT EXCHANGER EXHAUST AIR LEAVING TEMPERATURE (HREA1-T) ABOVE 34 DEG F (1.1°C). IF EC ONOMIZER CONTACT 'CLOSED', HRA FACE & BP DAMPERS OPEN TO 100% BP POSITION.
-AHU HEAT TRANSFER CORE BYPASS DAMPERS ARE NORMALLY CLOSED. UNIT CONTROL PANEL WILL MODULATE THE BYPASS DAMPERS FULLY OPEN WHEN ECONOMIZER CONTACTS ARE CLOSED.

NOTES:
(1) ITALIC SEQUENCE OF OPERATION IS PROVIDED BY JCI. FIELD TO VERIFY SEQUENCE BEFORE PROGRAMMING.

IN CONSIDERATION OF THE RECEIPT OF THIS DOCUMENT, THE RECIPIENT AGREES NOT TO REPRODUCE, COPY, USE OR TRANSMIT THIS DOCUMENT AND/OR THE INFORMATION THEREIN CONTAINED, IN WHOLE OR IN PART, OR TO SUFFER SUCH ACTION BY OTHERS, FOR ANY PURPOSE, EXCEPT WITH THE ADVANCE WRITTEN PERMISSION OF JOHNSON CONTROLS, INC. AND FURTHER AGREES TO SURRENDER SAME TO JOHNSON CONTROLS, INC. UPON DEMAND.

COPYRIGHT JOHNSON CONTROLS, INC. 2018

Drawing Title
AHU-2 Sequence of Operation

Project Title
Iqualuit Waste Water Treatment Plant Upgrades

Rev.	Rev. Date	Rev. By	Rev. Description
2	10/11/2018	SH	Re-Submittal
1	07/23/2018	SH	Submittal

Account Executive	Project Owner	Drawn Designer	Drawn By	Drawing Date	Approved By	Approval Date
G. D. Montigny	Philippe Cemosek	CoEE	SH	07/23/2018		

Johnson Controls

Branch Information
Johnson Controls Ltd.
1375 Rue Frank-Carrel
Ville de Québec, QC G1N 2E7
Phone: 418-681-7958

Contract Number
8N0Y-0079
Drawing Number
006.002

110.109.192.72\Field Engineering\NA\CANADA-HOUSTON\FY-18\PFM\8N0Y0079\Drawings\AHU-2 Sequence of Operation.vsd

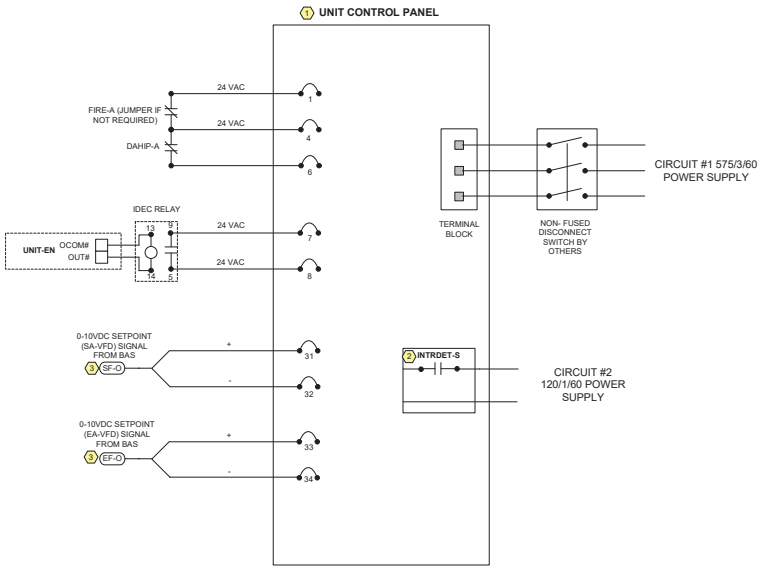

Notes:

1. AH INTEGRAL CONTROLLER PROVIDED BY UNIT MANUFACTURER. JCI WILL ONLY PROVIDE UNIT ENABLE AND SETPOINT SIGNAL TO AH CONTROL PANEL. JCI WILL ALSO PROVIDE FIRE ALARM & HIGH STATIC PRESSURE INTERLOCK WIRING FROM AH PANEL TO RESPECTIVE SYSTEM.
2. DRY CONTACT "INTRDET-S" PROVIDED BY OTHERS TO DETERMINE BUILDING OCCUPANCY.
3. SUPPLY AND EXHAUST FAN SPEED CONTROL SIGNAL WILL BE PROVIDED BY BAS TO AHU-2 CONTROL PANEL.

IN CONSIDERATION OF THE RECEIPT OF THIS DOCUMENT, THE RECIPIENT AGREES NOT TO REPRODUCE, COPY, USE OR TRANSMIT THIS DOCUMENT AND/OR THE INFORMATION THEREIN CONTAINED, IN WHOLE OR IN PART, OR TO SUFFER SUCH ACTION BY OTHERS, FOR ANY PURPOSE, EXCEPT WITH THE ADVANCE WRITTEN PERMISSION OF JOHNSON CONTROLS, INC. AND FURTHER AGREES TO SURRENDER SAME TO JOHNSON CONTROLS, INC. UPON DEMAND.

COPYRIGHT JOHNSON CONTROLS, INC. 2018

Drawing Title
AHU-2 Wiring Diagram

Project Title
Iqualuit Waste Water Treatment Plant Upgrades

Rev. No.	Rev. Date	Description	Rev. By
1	07/23/2018	Submittal	SH

Account Executive	Project Owner	System Designer	Drawn By	Drawing Date	Approved By	Approval Date
G. D. Montigny	Philippe Cernosek	CoEE	SH	07/23/2018		

Johnson Controls

Branch Information
Johnson Controls Ltd.
1375 Rue Frank-Carrel
Ville de Québec, QC G1N 2E7
Phone: 418-681-7958

Contract Number
8N0Y-0079

Drawing Number
006.003

H:\8N0Y\0079\Drawings\AHU-2 Wiring Diagram.vsd

Electrician/Fitter	Point Information				Controller Information						Panel Information				Intermediate Device				Field Device				
Tag	Point Type	System Name	Object Name	Expanded ID	Controller Details	Trunk Type	Trunk Nbr	Trunk Addr.	Cable Destination Bay/Terminal	Termination Out	Panel	(1) Panel Location	Reference Drawing	Cable Number	Wiring /Tubing	Termination In	Device	Termination Out	Wiring /Tubing	Termination In	Device	Ref Detail Shape	Comment
		AHU-2			FEC 2611						EN-3	UPPER LEVEL MECH ROOM	M601, M402										Power to Controller
		AHU-2			FEC 2611	MS/TP	1	13			EN-3	UPPER LEVEL MECH ROOM	M601, M402										BacNet FC Bus
	UI IN-1	AHU-2	DA-T	Discharge Air Temp	FEC 2611	MS/TP	1	13	UI IN-1	IN1, ICOM1	EN-3	UPPER LEVEL MECH ROOM	M601, M402	1-13-UI IN-1					2/22	2-Wire	TE	F131	
	UI IN-2	AHU-2	RA-T	Return Air Temp	FEC 2611	MS/TP	1	13	UI IN-2	IN2, ICOM2	EN-3	UPPER LEVEL MECH ROOM	M601, M402	1-13-UI IN-2					2/22	2-Wire	TE	F131	
	UI IN-3	AHU-2	PH-T	Preheat Temp	FEC 2611	MS/TP	1	13	UI IN-3	IN3, ICOM3	EN-3	UPPER LEVEL MECH ROOM	M601, M402	1-13-UI IN-3					2/22	2-Wire	TE	F131	
	UI IN-4	AHU-2	SF-FDBK	Supply Fan Feedback	FEC 2611	MS/TP	1	13	UI IN-4	IN4, ICOM4, +15V	EN-3	UPPER LEVEL MECH ROOM	M601, M402	1-13-UI IN-4					3/22	See wiring detail	Voltage Input (Internal Pwr)	F102	
	UI IN-5	AHU-2	PFILT-DP	PreFilter Diff Pressure	FEC 2611	MS/TP	1	13	UI IN-5	IN5, +15V	EN-3	UPPER LEVEL MECH ROOM	M601, M402	1-13-UI IN-5					2/22	See wiring detail	Current Input (2 Wire)	F106	
	UI IN-6	AHU-2			FEC 2611	MS/TP	1	13	UI IN-6		EN-3	UPPER LEVEL MECH ROOM	M601, M402	1-13-UI IN-6									
	BI IN-7	AHU-2	LT-A	Low Temp Alarm	FEC 2611	MS/TP	1	13	BI IN-7	IN7, ICOM7	EN-3	UPPER LEVEL MECH ROOM	M601, M402	1-13-BI IN-7					2/22 / '2/22 (Unit Shutdown)	LINE, M1, (LINE,M2)	A70 (NO)	F302	
	BI IN-8	AHU-2	SF-S	Supply Fan Status	FEC 2611	MS/TP	1	13	BI IN-8	IN8, ICOM8	EN-3	UPPER LEVEL MECH ROOM	M601, M402	1-13-BI IN-8	2/22	OUT, COM	Current Relay	Motor Lead	Motor Lead	See wiring detail	Motor Status (Contact)	F301	
	BO OUT-1	AHU-2	UNIT-EN	Unit Enable	FEC 2611	MS/TP	1	13	BO OUT-1	OUT1, 24V COM	EN-3	UPPER LEVEL MECH ROOM	M601, M402	1-13-BO OUT-1					2/18	See wiring detail	24VAC OUT (Sw Hi, EXT Source)	F501	
	BO OUT-2	AHU-2	P1.6-C	Pump 1.6 Command	FEC 2611	MS/TP	1	13	BO OUT-2	OUT2, 24V COM	EN-3	UPPER LEVEL MECH ROOM	M601, M402	1-13-BO OUT-2	2/22	COIL (Wh/Yel,Wh/Blue)	RIB Relay	COM, NO (Yel, Org)	2/14	See wiring detail	Starter (NO) (Sw Hi, EXT Source)	F502	
	BO OUT-3	AHU-2			FEC 2611	MS/TP	1	13	BO OUT-3		EN-3	UPPER LEVEL MECH ROOM	M601, M402	1-13-BO OUT-3									
	CO OUT-4	AHU-2	PH-O	Preheat Output	FEC 2611	MS/TP	1	13	CO OUT-4	OUT4, OCOM4,24VAC, COM	EN-3	UPPER LEVEL MECH ROOM	M601, M402	1-13-CO OUT-4					2/22 / 2/18	GRY, BLK/BLK, RED	M92xx-GGx-x (Vdc) (Ext Source)	F267	
	CO OUT-5	AHU-2	RH-O	Reheat Output	FEC 2611	MS/TP	1	13	CO OUT-5	OUT5, OCOM5,24VAC, COM	EN-3	UPPER LEVEL MECH ROOM	M601, M402	1-13-CO OUT-5					2/22 / 2/18	GRY, BLK/BLK, RED	M92xx-GGx-x (Vdc) (Ext Source)	F267	
	CO OUT-6	AHU-2	ECON-SIG	Economizer Signal	FEC 2611	MS/TP	1	13	CO OUT-6	OUT6, 24V COM	EN-3	UPPER LEVEL MECH ROOM	M601, M402	1-13-CO OUT-6					2/18	See wiring detail	24VAC OUT (Sw Hi, EXT Source)	F901	
	CO OUT-7	AHU-2			FEC 2611	MS/TP	1	13	CO OUT-7		EN-3	UPPER LEVEL MECH ROOM	M601, M402	1-13-CO OUT-7									
	AO OUT-8	AHU-2	SF-O	Supply Fan Output	FEC 2611	MS/TP	1	13	AO OUT-8	OUT8, OCOM8	EN-3	UPPER LEVEL MECH ROOM	M601, M402	1-13-AO OUT-8					2/22	See wiring detail	Output (Voltage)	F201	
	AO OUT-9	AHU-2	EF-O	Exhaust Fan Output	FEC 2611	MS/TP	1	13	AO OUT-9	OUT9, OCOM9	EN-3	UPPER LEVEL MECH ROOM	M601, M402	1-13-AO OUT-9					2/22	See wiring detail	Output (Voltage)	F201	
		AHU-2			IOM 2721						EN-3	UPPER LEVEL MECH ROOM	M601, M402										Power to Controller
		AHU-2			IOM 2721	SA Bus	1	4			EN-3	UPPER LEVEL MECH ROOM	M601, M402										BacNet SA Bus
	UI IN-1	AHU-2	HRSA-T	Heat Recovery Supply Air Temperature	IOM 2721	SA Bus	1	4	UI IN-1	IN1, ICOM1	EN-3	UPPER LEVEL MECH ROOM	M601, M402	13-1-4-UI IN-1					2/22	2-Wire	TE	F131	
	UI IN-2	AHU-2	HREA-T	Heat Recovery Exhaust Air Temperature	IOM 2721	SA Bus	1	4	UI IN-2	IN2, ICOM2	EN-3	UPPER LEVEL MECH ROOM	M601, M402	13-1-4-UI IN-2					2/22	2-Wire	TE	F131	
	UI IN-3	AHU-2	EF-FDBK	Exhaust Fan Feedback	IOM 2721	SA Bus	1	4	UI IN-3	IN3, ICOM3, +15V	EN-3	UPPER LEVEL MECH ROOM	M601, M402	13-1-4-UI IN-3					3/22	See wiring detail	Voltage Input (Internal Pwr)	F102	
	UI IN-4	AHU-2	FFILT-DP	FinFilter Diff Pressure	IOM 2721	SA Bus	1	4	UI IN-4	IN4, +15V	EN-3	UPPER LEVEL MECH ROOM	M601, M402	13-1-4-UI IN-4					2/22	See wiring detail	Current Input (2 Wire)	F106	
	UI IN-5	AHU-2	P1.6-S	Pump 1.6 Status	IOM 2721	SA Bus	1	4	UI IN-5	IN5, ICOM5	EN-3	UPPER LEVEL MECH ROOM	M601, M402	13-1-4-UI IN-5	2/22	OUT, COM	Current Relay	Motor Lead	Motor Lead	See wiring detail	Motor Status (Contact)	F301	
	UI IN-6	AHU-2	EF-S	Exhaust Fan Status	IOM 2721	SA Bus	1	4	UI IN-6	IN6, ICOM6	EN-3	UPPER LEVEL MECH ROOM	M601, M402	13-1-4-UI IN-6	2/22	OUT, COM	Current Relay	Motor Lead	Motor Lead	See wiring detail	Motor Status (Contact)	F301	
	UI IN-7	AHU-2	DA-VP	Discharge Air Vel Press	IOM 2721	SA Bus	1	4	UI IN-7	IN7, ICOM7	EN-3	UPPER LEVEL MECH ROOM	M601, M402	13-1-4-UI IN-7					2/22	See wiring detail	Voltage Input (External Pwr)	F101	
	UI IN-8	AHU-2	EA-VP	Exhaust Air Vel Press	IOM 2721	SA Bus	1	4	UI IN-8	IN8, ICOM8	EN-3	UPPER LEVEL MECH ROOM	M601, M402	13-1-4-UI IN-8					2/22	See wiring detail	Voltage Input (External Pwr)	F101	
	AO OUT-1	AHU-2			IOM 2721	SA Bus	1	4	AO OUT-1		EN-3	UPPER LEVEL MECH ROOM	M601, M402	13-1-4-AO OUT-1									
	AO OUT-2	AHU-2			IOM 2721	SA Bus	1	4	AO OUT-2		EN-3	UPPER LEVEL MECH ROOM	M601, M402	13-1-4-AO OUT-2									
		AHU-2			IOM 2721						EN-3	UPPER LEVEL MECH ROOM	M601, M402										Power to Controller
		AHU-2			IOM 2721	SA Bus	1	5			EN-3	UPPER LEVEL MECH ROOM	M601, M402										BacNet SA Bus
	UI IN-1	AHU-2	UPPER-P	Upper Static Pressure	IOM 2721	SA Bus	1	5	UI IN-1	IN1, +15V	EN-3	UPPER LEVEL MECH ROOM	M601, M402	13-1-5-UI IN-1					2/22	-, +	DPT2xxx (mA)	F106	
	UI IN-2	AHU-2	LOWER-P	Lower Static Pressure	IOM 2721	SA Bus	1	5	UI IN-2	IN2, +15V	EN-3	UPPER LEVEL MECH ROOM	M601, M402	13-1-5-UI IN-2					2/22	-, +	DPT2xxx (mA)	F106	
	UI IN-3	AHU-2	DAPHI-A	Discharge Air High Duct Pressure	IOM 2721	SA Bus	1	5	UI IN-3	IN3, ICOM3	EN-3	UPPER LEVEL MECH ROOM	M601, M402	13-1-5-UI IN-3					2/22 / '2/22 (Unit Shutdown)	See Detail	AFS-460 (NC)	F303	
	UI IN-4	AHU-2	RAFILT-DP	RA Filter Diff Pressure	IOM 2721	SA Bus	1	5	UI IN-4	IN4, +15V	EN-3	UPPER LEVEL MECH ROOM	M601, M402	13-1-5-UI IN-4					2/22	See wiring detail	Current Input (2 Wire)	F106	
	UI IN-5	AHU-2	GASLEVEL-HI	Gas High Level	IOM 2721	SA Bus	1	5	UI IN-5	IN5, ICOM5	EN-3	UPPER LEVEL MECH ROOM	M601, M402	13-1-5-UI IN-5					2/22	See wiring detail	Dry Contact	F301	
	UI IN-6	AHU-2	EF-A	Exhaust Fan Alarm	IOM 2721	SA Bus	1	5	UI IN-6	IN6, ICOM6	EN-3	UPPER LEVEL MECH ROOM	M601, M402	13-1-5-UI IN-6					2/22	See VFD Detail	VFD Fault		
	UI IN-7	AHU-2	SF-A	Supply Fan Alarm	IOM 2721	SA Bus	1	5	UI IN-7	IN7, ICOM7	EN-3	UPPER LEVEL MECH ROOM	M601, M402	13-1-5-UI IN-7					2/22	See VFD Detail	VFD Fault		
	UI IN-8	AHU-2			IOM 2721	SA Bus	1	5	UI IN-8		EN-3	UPPER LEVEL MECH ROOM	M601, M402	13-1-5-UI IN-8									
	AO OUT-1	AHU-2			IOM 2721	SA Bus	1	5	AO OUT-1		EN-3	UPPER LEVEL MECH ROOM	M601, M402	13-1-5-AO OUT-1									
	AO OUT-2	AHU-2			IOM 2721	SA Bus	1	5	AO OUT-2		EN-3	UPPER LEVEL MECH ROOM	M601, M402	13-1-5-AO OUT-2									

NOTE:

(1) FIELD TO VERIFY EXACT LOCATION TO INSTALL PANEL.

IN CONSIDERATION OF THE RECEIPT OF THIS DOCUMENT, THE RECIPIENT AGREES NOT TO REPRODUCE, COPY, USE OR TRANSMIT THIS DOCUMENT AND/OR THE INFORMATION THEREIN CONTAINED, IN WHOLE OR IN PART, OR TO SUFFER SUCH ACTION BY OTHERS, FOR ANY PURPOSE, EXCEPT WITH THE ADVANCE WRITTEN PERMISSION OF JOHNSON CONTROLS, INC. AND FURTHER AGREES TO SURRENDER SAME TO JOHNSON CONTROLS, INC. UPON DEMAND.

COPYRIGHT JOHNSON CONTROLS, INC. 2018

Drawing Title
AHU-2 Hardware Schedule

Project Title
Iqualuit Waste Water Treatment Plant Upgrades

Rev. Num.	ECN	Date	Rev. By	Rev. Description
2	2	10/11/2018	SH	Re-Submittal
1	1	07/23/2018	SH	Submittal

Account Executive	Project Owner	System Designer	Drawn By	Drawing Date	Approved By	Approval Date
G. D. Montigny	Philippe Cernosek	CoEE	SH	07/23/2018		

Johnson Controls

Branch Information
Johnson Controls Ltd.
1375 Rue Frank-Carrel
Ville de Québec, QC G1N 2E7
Phone: 418-681-7958

Contract Number
8N0Y-0079

Drawing Number
006.004

\\10.109.192.72\Field Engineering\NA\CANADA-HOUSTON\FY-18\PFM\8N0Y0079\Drawings\AHU-2 Hardware Schedule.vsd

DETAIL F131 TEMPERATURE SENSOR INPUT

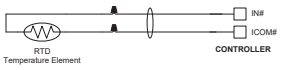

DETAIL F102 VOLTAGE INPUT - INTERNAL SOURCE

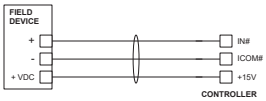

DETAIL F301 BINARY INPUT (DRY CONTACT)

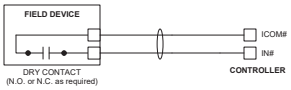

DETAIL F302 N.O. BINARY INPUT - A70

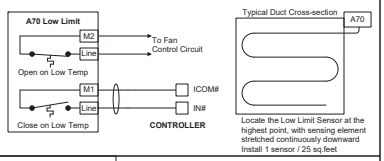

DETAIL F303 N.C. BINARY INPUT – AFS460

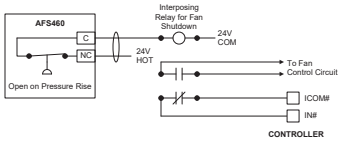

DETAIL F501 24 VAC BINARY OUTPUT (Switch High, EXT Sourced)

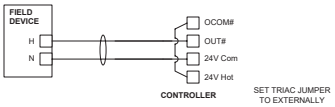

DETAIL F267 0-10VDC OUTPUT to M92xx-GGx and HGx or VA92xx-GGx and HGx

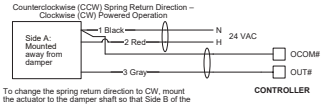

DETAIL F502 24 VAC BINARY OUTPUT to LOW CURRENT DRAW DEVICE (Switch High, EXT Sourced)

(Use when current draw of the Field Device is less than 50 mA)

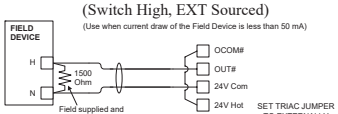

DETAIL F106 CURRENT INPUT - INTERNAL SOURCE (2 Wire)

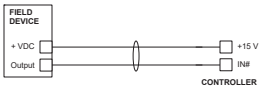

DETAIL F201 ANALOG OUTPUT (VOLTAGE)

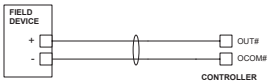

DETAIL F365 BINARY INPUT from M92xx-xxx-x, and VA92xx-xxx-x

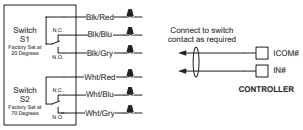

DETAIL F1042 VFD with Safeties Wiring (1)

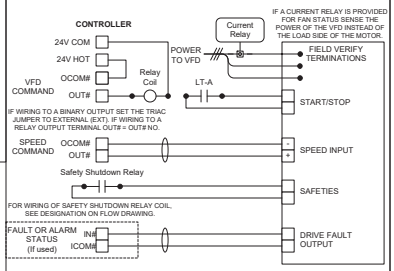

DETAIL F101 VOLTAGE INPUT - EXTERNAL SOURCE

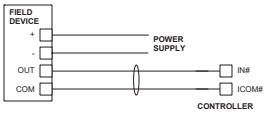

DETAIL F901 24 VAC TRIAC OUTPUT (Switch High, EXT Sourced)

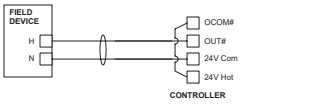

NOTE:

(1) LOW TEMPERATURE ALARM (LT-A) TO BE INTERLOCKED WITH FAN VFD. WIRING TO BE REFFERED FOR SAFETY SHUTDOWN.

IN CONSIDERATION OF THE RECEIPT OF THIS DOCUMENT, THE RECIPIENT AGREES NOT TO REPRODUCE, COPY, USE OR TRANSMIT THIS DOCUMENT AND/OR THE INFORMATION THEREIN CONTAINED, IN WHOLE OR IN PART, OR TO SUFFER SUCH ACTION BY OTHERS, FOR ANY PURPOSE, EXCEPT WITH THE ADVANCE WRITTEN PERMISSION OF JOHNSON CONTROLS, INC. AND FURTHER AGREES TO SURRENDER SAME TO JOHNSON CONTROLS, INC. UPON DEMAND.

COPYRIGHT JOHNSON CONTROLS, INC. 2018

Drawing Title
AHU-2 Wiring Details

Project Title
Iqualuit Waste Water Treatment Plant Upgrades

No.	Date	By	Description
1	07/23/2018	SH	Submittal

Account Executive	Project Owner	System Designer	Drawn By	Drawing Date	Approved By	Approval Date
G. D. Montigny	Philippe Cemosek	CoEE	SH	07/23/2018		

Johnson Controls

Branch Information
Johnson Controls Ltd.
1375 Rue Frank-Carrel
Ville de Québec, QC G1N 2E7
Phone: 418-681-7958

Contract Number
8N0Y-0079

Drawing Number
006.005

H:\8N0Y0079\Drawings\AHU-2 Wiring Details.vsd

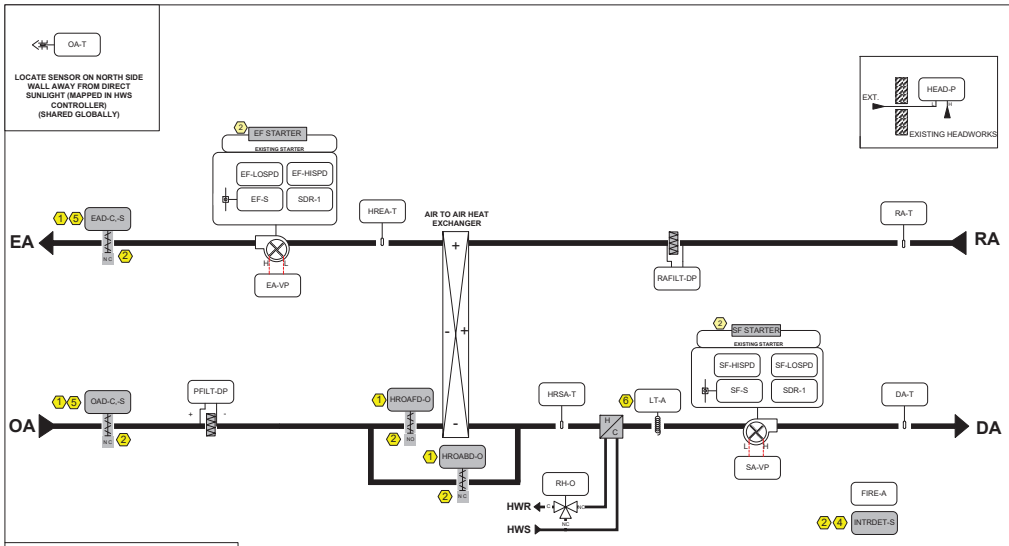

BILL OF MATERIALS

Designation	Qty	Part Number	Description
Field Devices:			
DA-T	1	TTE-112-W	XP 12" Pt1000, DUCT TEMP, HAZARDOUS LOC
EF-S	1	CSDSC-C50100L0	CURR SW SELF CAL CLMP
HEAD-P	1	A-602	MOUNTING KIT FOR AIR FILTER W/2 PRESSURE TIPS
	1	DCP-1.5-W	1.5 AMP POWER SUPPLY
	1	IX3F4S2P5IWLXFM	IS DP TRANSMITTER -2.5IN TO 2.5IN WC 0.25%
	1	MTL7706+	INTRINSIC SAFETY BARRIER, 4-20 mA 2-WIRE TRANSMITT
HREA-T	1	TTE-112-W	XP 12" Pt1000, DUCT TEMP, HAZARDOUS LOC
HROABD-O	1	ZS-260	EXPLOSION PROOF HOUSING
HROAFD-O	1	ZS-260	EXPLOSION PROOF HOUSING
HRSA-T	1	TTE-112-W	XP 12" Pt1000, DUCT TEMP, HAZARDOUS LOC
LT-A	1	HZLIM-LO-A	XP LO LIM MAN RESET 35 to 45, EXPL PROOF
RA-T	1	TTE-112-W	XP 12" Pt1000, DUCT TEMP, HAZARDOUS LOC
SF-S	1	CSDSC-C50100L0	CURR SW SELF CAL CLMP
XFILT-DP	2	A-602	MOUNTING KIT FOR AIR FILTER W/2 PRESSURE TIPS
	2	DCP-1.5-W	1.5 AMP POWER SUPPLY
	2	IX3F4S2P5IWXFM	IS DP TRANSMITTER 0.25 IN WC 0.25%
	2	MTL7706+	INTRINSIC SAFETY BARRIER, 4-20 mA 2-WIRE TRANSMITT
Panel Devices:			
AHU3-CTRL	1	MS-FEC2611-0	FEC2611-0,FEC17
AHU3-IOM4	1	MS-IOM4711-0	IOM4711,IOM 17 POINT,UL
AHU3-IOM5	1	MS-IOM3721-0	MS-IOM3721-0,INPUT
EA-VP	1	DPT260-MS2	DPT MR/OUTPUT1-10WC LCD
EF-HISPD	1	RH2B-ULAC24V	DPDT,10A,HC=24 VAC,W/LED
	1	SH2B-05	DPDT RELAY BASE FOR RH2B
EF-LOSPD	1	RH2B-ULAC24V	DPDT,10A,HC=24 VAC,W/LED
	1	SH2B-05	DPDT RELAY BASE FOR RH2B
RB-1	1	RIBMNLB-2	PANEL RIB RELAY LOGIC
SA-VP	1	DPT260-MS2	DPT MR/OUTPUT1-10WC LCD
SDR-1	1	RH2B-ULAC24V	DPDT,10A,HC=24 VAC,W/LED
	1	SH2B-05	DPDT RELAY BASE FOR RH2B
SF-HISPD	1	RH2B-ULAC24V	DPDT,10A,HC=24 VAC,W/LED
	1	SH2B-05	DPDT RELAY BASE FOR RH2B
SF-LOSPD	1	RH2B-ULAC24V	DPDT,10A,HC=24 VAC,W/LED
	1	SH2B-05	DPDT RELAY BASE FOR RH2B
Other Devices:			
RH-O	1	VALVE	REFER VALVE SCHEDULE
	1	ZS-260	EXPLOSION PROOF HOUSING

NOTES:
1. REFER PANEL EN-5 DETAILS ON DWG 012.005.
2. REFER DWG 006007 FOR SAFETY WIRING DETAILS.
3. REFER DWG 006007 FOR XFILT-DP AND HEAD-P SENSOR WIRING DETAILS.
4. BELOW ARE THE DEVICES THAT WILL BE PANEL MOUNTED. EXPLOSION PROOF DEVICES ARE NOT CONSIDERED FOR THEM AS THESE ARE PANEL MOUNTED. EA-VP, SA-VP, EF-HISPD, EF-LOSPD, SF-HISPD, SF-LOSPD, SDR-1, SAFETY RELAY RB-1.

GAS DETECTION SYSTEM

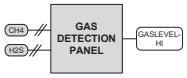

ZONE CLASSIFICATION AREA: UPPER LEVEL, CLASS-1, ZONE-2, CATEGORY-1 AREA

NOTES:
1. DAMPERS & ACTUATORS ARE EXISTING & TO BE REUSED. FIELD TO CHECK IF EXISTING ACTUATORS NEEDS EXPLOSION PROOF HOUSING. PRESENTLY WE HAVE NOT CONSIDER ANY EXPLOSION PROOF HOUSING FOR EXISTING ACTUATORS.

2. SUPPLY AND EXHAUST FAN STATUS SWITCH (SF-S, EF-S) WILL BE MOUNTED INSIDE STARTER ENCLOSURE. HENCE NO EXPLOSION PROOF DEVICE SELECTED FOR THESE DEVICES.

③ AIR HANDLING UNIT SCHEDULE

SR. NO.	SYSTEM NAME	SERVICE	S/A AIRFLOW (L/s)	E/A AIRFLOW (L/s)	SUPPLY FAN ESP (Pa)	SF HP	EXHAUST FAN ESP (Pa)	EF HP	ELEC V/PH/HZ
1	AHU-3 (EXISTING)	EXISTING HEADWORKS RM-101, 102	2740	3040	500	5	438	5	575/3/60

NOTES:
1. DAMPER & ACTUATOR ARE EXISTING AND WILL BE RE-USED. OA & EA DAMPER WILL BE COMMANDED FROM BAS.
2. DEVICES SHOWN IN GRAY ARE EXISTING AND WILL BE REUSED.
3. AHU-3 IS EXISTING UNIT INSTALLED ON THE MAIN FLOOR OF EXISTING HEADWORKS. AHU-3 CONTROL WILL BE MIGRATED TO NEW DDC.
4. DRY CONTACT "INTRDET-S" PROVIDED BY OTHERS WILL BE MONITORED ON BAS TO DETERMINE BUILDING OCCUPANCY.
5. INTERNAL AUXILIARY SWITCH OF AN EXISTING DAMPER ACTUATOR WILL BE USED FOR DAMPER STATUS MONITORING. FIELD TO VERIFY THE AVAILABILITY OF INTERNAL AUXILIARY SWITCH.
6. FIELD TO VERIFY EXACT LOCATION TO INSTALL LT-A.
7. FIRE ALARM (NO) CONTACT WILL PROVIDED BY FAS CONTRACTORS.

IN CONSIDERATION OF THE RECEIPT OF THIS DOCUMENT, THE RECIPIENT AGREES NOT TO REPRODUCE, COPY, USE OR TRANSMIT THIS DOCUMENT AND/OR THE INFORMATION THEREIN CONTAINED, IN WHOLE OR IN PART, OR TO SUFFER SUCH ACTION BY OTHERS, FOR ANY PURPOSE, EXCEPT WITH THE ADVANCE WRITTEN PERMISSION OF JOHNSON CONTROLS, INC. AND FURTHER AGREES TO SURRENDER SAME TO JOHNSON CONTROLS, INC. UPON DEMAND.

COPYRIGHT JOHNSON CONTROLS, INC. 2018

Drawing Title: **AHU-3 Flow Diagram**

Project Title: **Iqualuit Waste Water Treatment Plant Upgrades**

Rev. No.	Rev. Date	Rev. By	Rev. Description
1	07/23/2018	SH	Submittal

Account Executive	Project Owner	Concern Designer	Drawn By	Drawing Date	Approved By	Approval Date
G. D. Montigny	Philippe Cemosek	CoEE	SH	07/23/2018		

Johnson Controls

Branch Information
Johnson Controls Ltd.
1375 Rue Frank-Carrel
Ville de Québec, QC G1N 2E7
Phone: 418-681-7958

Contract Number: **8N0Y-0079**

Drawing Number: **006.006**

H:\8N0Y0079\Drawings\AHU-3 Flow Layout.vsd

SEQUENCE OF OPERATION:

GENERAL:
AHU-3 IS AN EXISTING CUSTOM BUILT 100% OUTDOOR AIR UNIT COMPLETE WITH TWO (2) TWO-SPEED FANS, AN AIR-TO-AIR FIXED PLATE HEAT EXCHANGER, DEFROST BYPASS DAMPERS, A REHEAT HYDRONIC HEATING COIL AND EXHAUST AND OUTDOOR AIR DAMPERS. THE UNIT IS INSTALLED ON THE MAIN FLOOR OF THE EXISTING HEADWORKS BUILDING AND SERVICES THE EXISTING HEADWORKS ROOM.

SUPPLY & EXHAUST FAN CONTROL (SF, EF):
1. EXISTING AHU-3 CONSISTS OF A TWO SPEED SUPPLY AND EXHAUST AIR FAN, REHEAT COIL, DEFROST BYPASS, HEAT RECOVERY SECTION AND FILTER SECTION.

2. AHU-3 AIR SYSTEM TO OPERATES CONTINUOUSLY. AHU-3 WILL NORMALLY OPERATE WITH THE SUPPLY FANS AND EXHAUST FAN AT 50% SPEED TO PROVIDE 6 ACH OF CONTINUOUS VENTILATION.

3. WHEN INTRUSION DETECTION SYSTEM IS DISABLED DETECTED BY "INTRDET-S" (I.E. WHEN BUILDING IS OCCUPIED) OR WHEN THE GAS DETECTION SYSTEM IS ACTIVATED, OR WHEN THE OUTSIDE AIR TEMPERATURE IS ABOVE 10 DEG C, THE SUPPLY FAN AND EXHAUST FAN WILL SWITCH TO SPEED 2 (100% SPEED) TO PROVIDE 12 ACH OF CONTINUOUS VENTILATION. FINAL FAN SPEEDS TO BE DETERMINED DURING COMMISSIONING.

4. GAS DETECTION BY PLC CONTRACTOR. INTERLOCK PLC I/O WITH DDC AHU CONTROLS.

5. IN EVENT OF EITHER SUPPLY FAN FAILURE OR EXHAUST FAN FAILURE, ALARM TROUBLE AT OWS.

6. FAN STATUS AT OPERATOR WORKSTATION WILL BE SHOWN.

7. AIR CHANGE PER HOUR (ACH) RATE AT OPERATOR WORKSTATION WILL BE SHOWN.

8. RELATIVE SPACE PRESSURE AT OPERATOR WORKSTATION WILL BE SHOWN.

9. AIR FILTER DP AT OPERATOR WORKSTATION WILL BE SHOWN.

10. AHU-3 HEAT TRANSFER CORE "DEFROST MODE" BYPASS DAMPERS ARE NORMALLY CLOSED (FULL AIR FLOW THROUGH HEAT EXCHANGER). BAS TO SWITCH AHU-3 TO DEFROST MODE WHEN SUPPLY AIR TEMPERATURE DOWNSTREAM OF HEX AND UPSTREAM OF REHEAT COIL IS LESS 5 DEG C AS SENSED BY AVERAGING TYPE DUCT TEMPERATURE SENSOR. IN "DEFROST MODE", BAS MODULATES AHU-3 FACE AND BYPASS DAMPERS TO MAINTAIN EXHAUST AIR TEMPERATURE ABOVE 2 DEG C.

REHEAT COIL:
1. NEW 3-WAY CONTROL VALVE FOR AHU-3 IS PROVIDED.

2. BAS WILL MODULATE AHU-3 REHEAT COIL 3-WAY CONTROL VALVE TO SATISFY SUPPLY AIR TEMPERATURE (DA-T) SETPOINT. INITIAL SETPOINT = 10 DEG C.

IN EVENT THAT SAT TEMPERATURE IS LESS THAN 5 DEG C AS SENSED BY DUCT MOUNTED AVERAGING TYPE TEMPERATURE SENSOR, ALARM TROUBLE AT OWS.

SAFETY INTERLOCK:
1 *1. OUTSIDE AIR AND EXHAUST AIR DAMPER STATUS WILL BE MONITORED AT BAS. SUPPLY FAN AND EXHAUST FAN WILL BE ENABLED ONCE BOTH OUTSIDE AIR AND EXHAUST AIR DAMPER OPEN STATUS IS PROVEN AT BAS.*

2. LOW TEMPERATURE ALARM (LT-A) - WHEN IN "ALARM", THE CONTROL SEQUENCE WILL STOP RUNNING, THE VALVE(S) WILL OPEN AND THE FAN(S) WILL BE DISABLED VIA A HARD WIRED SHUTDOWN CIRCUIT.

3. FIRE ALARM CONTACT WILL BE HARDWIRED INTERLOCKED WITH SUPPLY FAN AND EXHAUST FAN STARTER I.E. WHEN IN ALARM, FANS WILL GET SHUT-DOWN.

MONITORING POINTS FROM BAS:
1. OUTDOOR AIR TEMPERATURE (OA-T)
2. HR EXHAUST AIR TEMPERATURE (HREA-T)
3. RETURN AIR TEMPERATURE (RA-T)
4. SUPPLY AIR FLOW (DA-VP)
5. EXHAUST AIR FLOW (EA-VP)
6. LOW TEMPERATURE ALARM (LT-A)
7. SUPPLY AIR TEMPERATURE (DA-T).

AHU-3 SAFETY WIRING DETAILS

RELAY LOGIC BOARD(RIBMNLB-2)

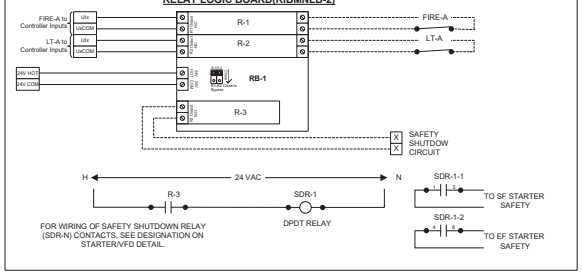

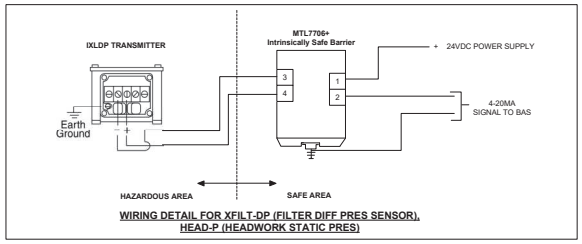

WIRING DETAIL FOR XFILT-DP (FILTER DIFF PRES SENSOR), HEAD-P (HEADWORK STATIC PRES)

Notes:
1 SEQUENCE OF OPERATION IN ITALIC IS BE PROPOSED BY JCI. PROPOSED SEQUENCE TO BE VERIFIED BY FIELD BEFORE PROGRAMMING.

IN CONSIDERATION OF THE RECEIPT OF THIS DOCUMENT, THE RECIPIENT AGREES NOT TO REPRODUCE, COPY, USE OR TRANSMIT THIS DOCUMENT AND/OR THE INFORMATION THEREIN CONTAINED, IN WHOLE OR IN PART, OR TO SUFFER SUCH ACTION BY OTHERS, FOR ANY PURPOSE, EXCEPT WITH THE ADVANCE WRITTEN PERMISSION OF JOHNSON CONTROLS, INC. AND FURTHER AGREES TO SURRENDER SAME TO JOHNSON CONTROLS, INC. UPON DEMAND.

COPYRIGHT JOHNSON CONTROLS, INC. 2018

Drawing Title: **AHU-3 Sequence of Operation**

Rev. No.	Rev. Date	Rev. By	Rev. Description
1	07/23/2018	SH	Submittal

Project Title: **Iqualuit Waste Water Treatment Plant Upgrades**

Account Executive	Project Owner	Concern Designer	Drawn By	Drawing Date	Approved By	Approval Date
G. D. Montigny	Philippe Cemosek	CoEE	SH	07/23/2018		

Johnson Controls

Branch Information
Johnson Controls Ltd.
1375 Rue Frank-Carrel
Ville de Québec, QC G1N 2E7
Phone: 418-681-7958

Contract Number: **8N0Y-0079**

Drawing Number: **006.007**

H:\8N0Y0079\Drawings\AHU-3 Sequence of Operation.vsd

Electrician/Fitter		Point Information			Controller Information						Panel Information				Intermediate Device				Field Device				
Tag	Point Type	System Name	Object Name	Expanded ID	Controller Details	Trunk Type	Trunk Nbr	Trunk Addr.	Cable Destination Bay/Terminal	Termination Out	Panel	(1) Panel Location	Reference Drawing	Cable Number	Wiring /Tubing	Termination In	Device	Termination Out	Wiring /Tubing	Termination In	Device	Ref Detail Shape	Comment
		AHU-3			FEC 2611						EN-5	UPPER HEADWORKS, OFFICE	M601, M301										Power to Controller
		AHU-3			FEC 2611	MS/TP	1	17			EN-5	UPPER HEADWORKS, OFFICE	M601, M301										BacNet FC Bus
	UI IN-1	AHU-3	DA-T	Discharge Air Temp	FEC 2611	MS/TP	1	17	UI IN-1	IN1, ICOM1	EN-5	UPPER HEADWORKS, OFFICE	M601, M301	5-17-UI IN-1					2/22	2-Wire	TE	F131	
	UI IN-2	AHU-3	RA-T	Return Air Temp	FEC 2611	MS/TP	1	17	UI IN-2	IN2, ICOM2	EN-5	UPPER HEADWORKS, OFFICE	M601, M301	5-17-UI IN-2					2/22	2-Wire	TE	F131	
	UI IN-3	AHU-3	HRSA-T	Heat Recovery Supply Air Temperature	FEC 2611	MS/TP	1	17	UI IN-3	IN3, ICOM3	EN-5	UPPER HEADWORKS, OFFICE	M601, M301	5-17-UI IN-3					2/22	2-Wire	TE	F131	
	UI IN-4	AHU-3	HREA-T	Heat Recovery Exhaust Air Temperature	FEC 2611	MS/TP	1	17	UI IN-4	IN4, ICOM4	EN-5	UPPER HEADWORKS, OFFICE	M601, M301	5-17-UI IN-4					2/22	2-Wire	TE	F131	
	UI IN-5	AHU-3			FEC 2611	MS/TP	1	17	UI IN-5		EN-5	UPPER HEADWORKS, OFFICE	M601, M301	5-17-UI IN-5									
	UI IN-6	AHU-3			FEC 2611	MS/TP	1	17	UI IN-6		EN-5	UPPER HEADWORKS, OFFICE	M601, M301	5-17-UI IN-6									
	BI IN-7	AHU-3	LT-A	Low Temp Alarm	FEC 2611	MS/TP	1	17	BI IN-7	IN7, ICOM7	EN-5	UPPER HEADWORKS, OFFICE	M601, M301	5-17-BI IN-7					2/22	See wiring detail	Dry Contact	F301	
	BI IN-8	AHU-3	SF-S	Supply Fan Status	FEC 2611	MS/TP	1	17	BI IN-8	IN8, ICOM8	EN-5	UPPER HEADWORKS, OFFICE	M601, M301	5-17-BI IN-8	2/22	OUT, COM	Current Relay	Motor Lead	2/22	See wiring detail	Dry Contact	F301	
	BO OUT-1	AHU-3	OAD-C	OA Damper Command	FEC 2611	MS/TP	1	17	BO OUT-1	OUT1, 24V COM	EN-5	UPPER HEADWORKS, OFFICE	M601, M301	5-17-BO OUT-1					2/18	See wiring detail	24VAC OUT (Sw Hi, EXT Source)	F501	
	BO OUT-2	AHU-3	EAD-C	EA Damper Command	FEC 2611	MS/TP	1	17	BO OUT-2	OUT2, 24V COM	EN-5	UPPER HEADWORKS, OFFICE	M601, M301	5-17-BO OUT-2					2/18	See wiring detail	24VAC OUT (Sw Hi, EXT Source)	F501	
	BO OUT-3	AHU-3			FEC 2611	MS/TP	1	17	BO OUT-3		EN-5	UPPER HEADWORKS, OFFICE	M601, M301	5-17-BO OUT-3									
	CO OUT-4	AHU-3	SF-HISPD	Supply Fan Hi Speed	FEC 2611	MS/TP	1	17	CO OUT-4	OUT4, 24V COM	EN-5	UPPER HEADWORKS, OFFICE	M601, M301	5-17-CO OUT-4	2/22	COIL-,COIL+	Relay	COM, NO	2/14	See wiring detail	Starter (2Spd w/Safety) (Sw Hi, EXT)	F1010	
	CO OUT-5	AHU-3	SF-LOSPD	Supply Fan Low Speed	FEC 2611	MS/TP	1	17	CO OUT-5	OUT5, 24V COM	EN-5	UPPER HEADWORKS, OFFICE	M601, M301	5-17-CO OUT-5	2/22	COIL-,COIL+	Relay	COM, NO	2/14	See wiring detail	Starter (2Spd w/Safety) (Sw Hi, EXT)	F1010	
	CO OUT-6	AHU-3			FEC 2611	MS/TP	1	17	CO OUT-6		EN-5	UPPER HEADWORKS, OFFICE	M601, M301	5-17-CO OUT-6									
	CO OUT-7	AHU-3			FEC 2611	MS/TP	1	17	CO OUT-7		EN-5	UPPER HEADWORKS, OFFICE	M601, M301	5-17-CO OUT-7									
	AO OUT-8	AHU-3	HROAFD-O	Heat Recovery OA Face Damper Output	FEC 2611	MS/TP	1	17	AO OUT-8	OUT8, OCOM8	EN-5	UPPER HEADWORKS, OFFICE	M601, M301	5-17-AO OUT-8					2/22	See wiring detail	Output (Voltage)	F201	
	AO OUT-9	AHU-3	HROABD-O	Heat Recovery OA Bypass Damper Output	FEC 2611	MS/TP	1	17	AO OUT-9	OUT9, OCOM9	EN-5	UPPER HEADWORKS, OFFICE	M601, M301	5-17-AO OUT-9					2/22	See wiring detail	Output (Voltage)	F201	
		AHU-3			IOM 4711						EN-5	UPPER HEADWORKS, OFFICE	M601, M301										Power to Controller
		AHU-3			IOM 4711	SA Bus	1	4			EN-5	UPPER HEADWORKS, OFFICE	M601, M301										BacNet SA Bus
	UI IN-1	AHU-3	HEAD-P	Headwork Static Pressure	IOM 4711	SA Bus	1	4	UI IN-1	IN1, ICOM1	EN-5	UPPER HEADWORKS, OFFICE	M601, M301	17-5-4-UI IN-1					2/18	See wiring detail	Current Input (Loop Pwr)	F104	
	UI IN-2	AHU-3	PFILT-DP	PreFilter Diff Pressure	IOM 4711	SA Bus	1	4	UI IN-2	IN2, ICOM2	EN-5	UPPER HEADWORKS, OFFICE	M601, M301	17-5-4-UI IN-2					2/18	See wiring detail	Current Input (Loop Pwr)	F104	
	UI IN-3	AHU-3	RAFILT-DP	Return Filter Diff Pressure	IOM 4711	SA Bus	1	4	UI IN-3	IN3, ICOM3	EN-5	UPPER HEADWORKS, OFFICE	M601, M301	17-5-4-UI IN-3					2/18	See wiring detail	Current Input (Loop Pwr)	F104	
	UI IN-4	AHU-3	SA-VP	Supply Air Vel Press	IOM 4711	SA Bus	1	4	UI IN-4	IN4, +15V	EN-5	UPPER HEADWORKS, OFFICE	M601, M301	17-5-4-UI IN-4					2/22	-, +	DPT2xxx (mA)	F106	
	UI IN-5	AHU-3	EA-VP	Exhaust Air Vel Press	IOM 4711	SA Bus	1	4	UI IN-5	IN5, +15V	EN-5	UPPER HEADWORKS, OFFICE	M601, M301	17-5-4-UI IN-5					2/22	-, +	DPT2xxx (mA)	F106	
	UI IN-6	AHU-3			IOM 4711	SA Bus	1	4	UI IN-6		EN-5	UPPER HEADWORKS, OFFICE	M601, M301	17-5-4-UI IN-6									
	BI IN-7	AHU-3	GASLEVEL-HI	Gas High Level	IOM 4711	SA Bus	1	4	BI IN-7	IN7, ICOM7	EN-5	UPPER HEADWORKS, OFFICE	M601, M301	17-5-4-BI IN-7					2/22	See wiring detail	Dry Contact	F301	
	BI IN-8	AHU-3	EF-S	Exhaust Fan Status	IOM 4711	SA Bus	1	4	BI IN-8	IN8, ICOM8	EN-5	UPPER HEADWORKS, OFFICE	M601, M301	17-5-4-BI IN-8	2/22	OUT, COM	Current Relay	Motor Lead	2/22	See wiring detail	Dry Contact	F301	
	BO OUT-1	AHU-3	EF-HISPD	Exhaust Fan Hi Speed	IOM 4711	SA Bus	1	4	BO OUT-1	OUT1, 24V COM	EN-5	UPPER HEADWORKS, OFFICE	M601, M301	17-5-4-BO OUT-1	2/22	COIL-,COIL+	Relay	COM, NO	2/14	See wiring detail	Starter (2Spd, Tower Vib) (Sw Hi, EXT)	F1010	
	BO OUT-2	AHU-3	EF-LOSPD	Exhaust Fan Low Speed	IOM 4711	SA Bus	1	4	BO OUT-2	OUT2, 24V COM	EN-5	UPPER HEADWORKS, OFFICE	M601, M301	17-5-4-BO OUT-2	2/22	COIL-,COIL+	Relay	COM, NO	2/14	See wiring detail	Starter (2Spd, Tower Vib) (Sw Hi, EXT)	F1010	
	BO OUT-3	AHU-3			IOM 4711	SA Bus	1	4	BO OUT-3		EN-5	UPPER HEADWORKS, OFFICE	M601, M301	17-5-4-BO OUT-3									
	CO OUT-4	AHU-3			IOM 4711	SA Bus	1	4	CO OUT-4		EN-5	UPPER HEADWORKS, OFFICE	M601, M301	17-5-4-CO OUT-4									
	CO OUT-5	AHU-3			IOM 4711	SA Bus	1	4	CO OUT-5		EN-5	UPPER HEADWORKS, OFFICE	M601, M301	17-5-4-CO OUT-5									
	CO OUT-6	AHU-3			IOM 4711	SA Bus	1	4	CO OUT-6		EN-5	UPPER HEADWORKS, OFFICE	M601, M301	17-5-4-CO OUT-6									
	CO OUT-7	AHU-3			IOM 4711	SA Bus	1	4	CO OUT-7		EN-5	UPPER HEADWORKS, OFFICE	M601, M301	17-5-4-CO OUT-7									
	AO OUT-8	AHU-3	RH-O	Reheat Output	IOM 4711	SA Bus	1	4	AO OUT-8	OUT8, OCOM8,24VAC, COM	EN-5	UPPER HEADWORKS, OFFICE	M601, M301	17-5-4-AO OUT-8					2/22 / 2/18	GRY, BLK/BLK, RED	M92xx-GGx-x (Vdc) (Ext Source)	F267	
	AO OUT-9	AHU-3			IOM 4711	SA Bus	1	4	AO OUT-9		EN-5	UPPER HEADWORKS, OFFICE	M601, M301	17-5-4-AO OUT-9									
		AHU-3			IOM 3721						EN-5	UPPER HEADWORKS, OFFICE	M601, M301										Power to Controller
		AHU-3			IOM 3721	SA Bus	1	5			EN-5	UPPER HEADWORKS, OFFICE	M601, M301										BacNet SA Bus
	BI IN-1	AHU-3	OAD-S	OA Damper Status	IOM 3721	SA Bus	1	5	BI IN-1	IN1, ICOM1	EN-5	UPPER HEADWORKS, OFFICE	M601, M301	17-5-5-BI IN-1					2/22	See wiring detail	Dry Contact	F301	
	BI IN-2	AHU-3	EAD-S	EA Damper Status	IOM 3721	SA Bus	1	5	BI IN-2	IN2, ICOM2	EN-5	UPPER HEADWORKS, OFFICE	M601, M301	17-5-5-BI IN-2					2/22	See wiring detail	Dry Contact	F301	
	BI IN-3	AHU-3	FIRE-A	Fire Alarm	IOM 3721	SA Bus	1	5	BI IN-3	IN3, ICOM3	EN-5	UPPER HEADWORKS, OFFICE	M601, M301	17-5-5-BI IN-3					2/22	See wiring detail	Dry Contact	F301	
	BI IN-4	AHU-3	INTRDET-S	Intrusion Detection System Status	IOM 3721	SA Bus	1	5	BI IN-4	IN4, ICOM4	EN-5	UPPER HEADWORKS, OFFICE	M601, M301	17-5-5-BI IN-4					2/22	See wiring detail	Dry Contact	F301	
SUMP PUMP	BI IN-5	AHU-3	SUMP2.1-S	Sump Pump 2.1 Status	IOM 3721	SA Bus	1	5	BI IN-5	IN5, ICOM5	EN-5	UPPER HEADWORKS, OFFICE	M601, M301	17-5-5-BI IN-5					2/22	See wiring detail	Dry Contact	F301	REFER DWG 011.001
SUMP PUMP	BI IN-6	AHU-3	SUMP2.2-S	Sump Pump 2.2 Status	IOM 3721	SA Bus	1	5	BI IN-6	IN6, ICOM6	EN-5	UPPER HEADWORKS, OFFICE	M601, M301	17-5-5-BI IN-6					2/22	See wiring detail	Dry Contact	F301	REFER DWG 011.001
SUMP PUMP	BI IN-7	AHU-3	SPHL2.1 & 2.2-A	Sump Pump 2.1 & 2.2 High Level Alarm	IOM 3721	SA Bus	1	5	BI IN-7	IN7, ICOM7	EN-5	UPPER HEADWORKS, OFFICE	M601, M301	17-5-5-BI IN-7					2/22	See wiring detail	Dry Contact	F301	REFER DWG 011.001
SUMP PUMP	BI IN-8	AHU-3	SUMP2.1-A	Sump Pump 2.1 Alarm	IOM 3721	SA Bus	1	5	BI IN-8	IN8, ICOM8	EN-5	UPPER HEADWORKS, OFFICE	M601, M301	17-5-5-BI IN-8					2/22	See wiring detail	Dry Contact	F301	REFER DWG 011.001
SUMP PUMP	BI IN-9	AHU-3	SUMP2.2-A	Sump Pump 2.2 Alarm	IOM 3721	SA Bus	1	5	BI IN-9	IN9, ICOM9	EN-5	UPPER HEADWORKS, OFFICE	M601, M301	17-5-5-BI IN-9					2/22	See wiring detail	Dry Contact	F301	REFER DWG 011.001
	BI IN-10	AHU-3			IOM 3721	SA Bus	1	5	BI IN-10		EN-5	UPPER HEADWORKS, OFFICE	M601, M301	17-5-5-BI IN-10									
	BI IN-11	AHU-3			IOM 3721	SA Bus	1	5	BI IN-11		EN-5	UPPER HEADWORKS, OFFICE	M601, M301	17-5-5-BI IN-11									
	BI IN-12	AHU-3			IOM 3721	SA Bus	1	5	BI IN-12		EN-5	UPPER HEADWORKS, OFFICE	M601, M301	17-5-5-BI IN-12									
	BI IN-13	AHU-3			IOM 3721	SA Bus	1	5	BI IN-13		EN-5	UPPER HEADWORKS, OFFICE	M601, M301	17-5-5-BI IN-13									
	BI IN-14	AHU-3			IOM 3721	SA Bus	1	5	BI IN-14		EN-5	UPPER HEADWORKS, OFFICE	M601, M301	17-5-5-BI IN-14									
	BI IN-15	AHU-3			IOM 3721	SA Bus	1	5	BI IN-15		EN-5	UPPER HEADWORKS, OFFICE	M601, M301	17-5-5-BI IN-15									
	BI IN-16	AHU-3			IOM 3721	SA Bus	1	5	BI IN-16		EN-5	UPPER HEADWORKS, OFFICE	M601, M301	17-5-5-BI IN-16									

NOTE:

(1) FIELD TO VERIFY EXACT LOCATION TO INSTALL PANEL.

IN CONSIDERATION OF THE RECEIPT OF THIS DOCUMENT, THE RECIPIENT AGREES NOT TO REPRODUCE, COPY, USE OR TRANSMIT THIS DOCUMENT AND/OR THE INFORMATION THEREIN CONTAINED, IN WHOLE OR IN PART, OR TO SUFFER SUCH ACTION BY OTHERS, FOR ANY PURPOSE, EXCEPT WITH THE ADVANCE WRITTEN PERMISSION OF JOHNSON CONTROLS, INC. AND FURTHER AGREES TO SURRENDER SAME TO JOHNSON CONTROLS, INC. UPON DEMAND.

COPYRIGHT JOHNSON CONTROLS, INC. 2018

Drawing Title
AHU-3 Hardware Schedule

Project Title
Iqualuit Waste Water Treatment Plant Upgrades

Rev. Num.	ECN	Date	Rev. By	Rev. Description
1	1	07/23/2018	SH	Submittal

Account Executive	Project Owner	System Designer	Drawn By	Drawing Date	Approved By	Approval Date
G. D. Montigny	Philippe Cernosek	CoEE	SH	07/23/2018		

Johnson Controls

Branch Information
Johnson Controls Ltd.
1375 Rue Frank-Carrel
Ville de Québec, QC G1N 2E7
Phone: 418-681-7958

Contract Number
8N0Y-0079

Drawing Number
006.008

H:\8N0Y0079\Drawings\AHU-3 Hardware Schedule.vsd

DETAIL F131 TEMPERATURE SENSOR INPUT

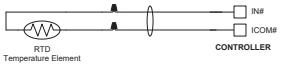

DETAIL F106 CURRENT INPUT - INTERNAL SOURCE (2 Wire)

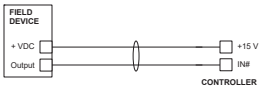

DETAIL F301 BINARY INPUT (DRY CONTACT)

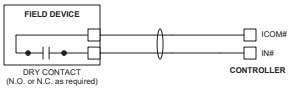

DETAIL F1010 Starter 2 Speed with Safety

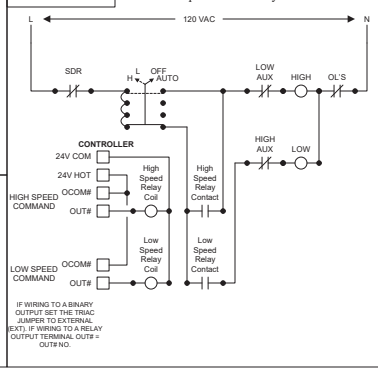

DETAIL F102 VOLTAGE INPUT - INTERNAL SOURCE

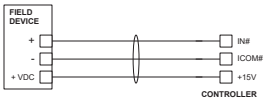

DETAIL F501 24 VAC BINARY OUTPUT (Switch High, EXT Sourced)

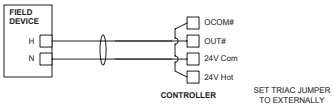

SET TRIAC JUMPER TO EXTERNALLY SOURCED (EXT) FOR ASSOCIATED BINARY OUTPUT(S).

DETAIL F267 0-10VDC OUTPUT to M92xx-GGx and HGx or VA92xx-GGx and HGx

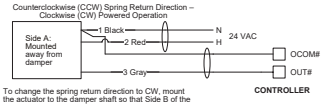

To change the spring return direction to CW, mount the actuator to the damper shaft so that Side B of the actuator is away from the damper. With power applied, the actuator now drives CCW from the 0° position, and spring returns CW.

DETAIL F104 CURRENT INPUT - EXTERNAL SOURCE (in Loop)

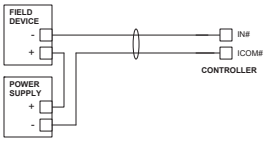

DETAIL F201 ANALOG OUTPUT (VOLTAGE)

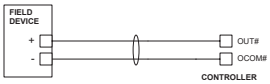

IN CONSIDERATION OF THE RECEIPT OF THIS DOCUMENT, THE RECIPIENT AGREES NOT TO REPRODUCE, COPY, USE OR TRANSMIT THIS DOCUMENT AND/OR THE INFORMATION THEREIN CONTAINED, IN WHOLE OR IN PART, OR TO SUFFER SUCH ACTION BY OTHERS, FOR ANY PURPOSE, EXCEPT WITH THE ADVANCE WRITTEN PERMISSION OF JOHNSON CONTROLS, INC. AND FURTHER AGREES TO SURRENDER SAME TO JOHNSON CONTROLS, INC. UPON DEMAND.

COPYRIGHT JOHNSON CONTROLS, INC. 2018

Drawing Title
AHU-3 Wiring Details

Project Title
Iqualuit Waste Water Treatment Plant Upgrades

Rev. Num.	Rev.	Date	Rev. By	Rev. Description
1	1	07/23/2018	SH	Submittal

Account Executive	Project Owner	System Designer	Drawn By	Drawing Date	Approved By	Approval Date
G. D. Montigny	Philippe Cernosek	CoEE	SH	07/23/2018		

Johnson Controls

Branch Information
Johnson Controls Ltd.
1375 Rue Frank-Carrel
Ville de Québec, QC G1N 2E7
Phone: 418-681-7958

Contract Number
8N0Y-0079

Drawing Number
006.009

H:\8N0Y\0079\Drawings\AHU-3 Wiring Details.vsd

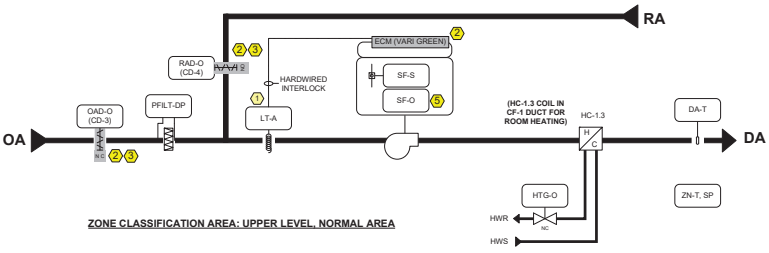

BILL OF MATERIALS

Tag	Qty	Part Number	Description
Field Devices:			
DA-T	1	TE-6351M-1	DUCT PROBE SENSOR 8 IN
LT-A	1	A70HA-1C	DUCT,MLT,SP=15-55 F (-9-13 C),STG=2
	1	TE-6001-8	AVERAGING ELEMENT HOLDER
OAD-O	1	M9208-GGA-3	ACT.ROTARY PROPORTIONAL
PFILT-DP	1	DPT2641-2R5D-1	DP TRANS, DIF, 0 TO 2.5
	2	FTG18A-600R	REMOTE MTD PROBE
RAD-O	1	M9208-GGA-3	ACT.ROTARY PROPORTIONAL
SF-S	1	CSDSC-C50100L0	CURR SW SELF CAL CLMP
ZN-T, -SP	1	NS-BTB7003-0	3X4.5.T.F/C.D.AJ.TB ADRS
Panel Devices:			
CF1-CTRL	1	MS-FEC2611-0	FEC2611-0,FEC17
Other Devices:			
HTG-O	1	VALVE	REFER VALVE SCHEDULE

SUPPLY FAN ECM MOTOR WIRING

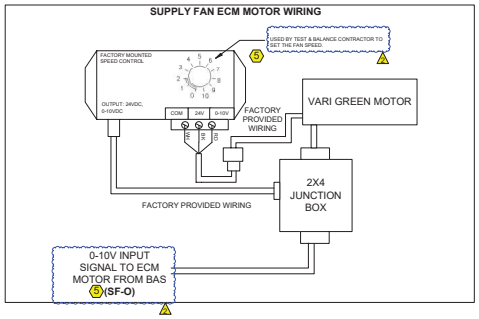

SR. NO.	SYSTEM NAME	SERVICE	LOCATION	S/A AIRFLOW (L/s)	SUPPLY FAN ESP (Pa)	SF HP	ELEC V/PH/HZ
1	CF-1	COOLING	MECH ROOM GRID B-C:4	635	125	1/4	115/1/60

SEQUENCE OF OPERATION:

GENERAL:

1. THE AIR SYSTEM PROVIDES ECONOMIZER FREE COOLING TO MECHANICAL ROOM.

2. WHEN ROOM TEMPERATURE IS ABOVE THERMOSTAT COOLING SETPOINT, INTIALLY SET AT 24 DEG C (USER ADJUSTABLE), ENERGIZE COOLING SYSTEM.

3. ON CALL FOR COOLING, ENERGIZE COOLING FAN (SF-O VIA 10V SIGNAL), MODULATE RETURN AIR AND OUTDOOR AIR DAMPERS TO SATISFY ZN-T SETPOINT. COOLING FAN WILL BE STARTED BY BAS (SF-O) TO PROVIDE CONSTANT SPEED DETERMINED BY TEST & BALANCE CONTRACTOR.

4. IF THE DISCHARGE AIR TEMP IS LESS THAN 5 DEG C FOR GREATER THAN FIVE (5) MINUTES, LOCK OUT THE COOLING FAN, DE-ENERGIZE DAMPERS AND ALARM AT OWS. THE ALARM SUPPRESSION TIME IS TO BE ADJUSTABLE AT THE OWS.

5. IF THE MECHANICAL ROOM TEMPERATURE EXCEEDS 38 DEG C (USER ADJUSTABLE) FOR LONGER THAN 15 MIN, ALARM TO THE OWS.

6. ON A HIGH-PRESSURE DROP AT THE FILTERS ALARM TO THE OWS. SET POINT TO BE FIELD DETERMINED AND ADJUSTABLE AT OWS.

MECHANICAL ROOM HEATING COIL (HC-1.3): (ONLY APPLICABLE FOR CF-1 SERVING TO MECHANICAL ROOM)

1. NORMALLY CLOSED MODULATING ZONE VALVE CYCLES OPENS WHEN ROOM TEMPERATURE BELOW 10 DEG C.
2. WHEN ROOM TEMPERATURE IS BELOW THERMOSTAT HEATING SETPOINT, INTIALLY SET AT 10 DEG C, ENERGIZE MECHANICAL ROOM COOLING.
-ENERGIZE MECHANICAL ROOM COOLING FAN.
-DAMPERS WILL REMAIN IN FULL CIRCULATION MODE (I.E. RAD OPEN AND OAD CLOSED).
-BAS WILL MODULATE NORMALLY CLOSED TWO WAY CONTROL VALVE TO MAINTAIN MINIMUM DA-T SETPOINT. INITAL SETPOINT = 10 DEG C.

NOTES:

1. FIELD TO VERIFY EXACT LOCATION TO INSTALL LT-A.
2. DEVICES IN GRAY PROVIDED BY OTHERS.
3. DAMPERS ARE PROVIDED WITH THE UNIT BY UNIT MANUFACTURER.
4. REFER PANEL DETAILS ON DWG 012.004.
5. 0-10V SIGNAL PROVIDED BY BAS TO ECM PANEL. 0 V SIGNAL WILL INDICATE FAN-OFF COMMAND AND 10V SIGNAL WILL INDICATE FAN ON COMMAND. FAN SPEED WILL BE MANUALLY SET BY TEST AND BALANCE CONTRACTORS.

IN CONSIDERATION OF THE RECEIPT OF THIS DOCUMENT, THE RECIPIENT AGREES NOT TO REPRODUCE, COPY, USE OR TRANSMIT THIS DOCUMENT AND/OR THE INFORMATION THEREIN CONTAINED, IN WHOLE OR IN PART, OR TO SUFFER SUCH ACTION BY OTHERS, FOR ANY PURPOSE, EXCEPT WITH THE ADVANCE WRITTEN PERMISSION OF JOHNSON CONTROLS, INC. AND FURTHER AGREES TO SURRENDER SAME TO JOHNSON CONTROLS, INC. UPON DEMAND.

COPYRIGHT JOHNSON CONTROLS, INC. 2018

Drawing Title: **Mechanical Room Cooling CF-1 Flow Diagram**

Project Title: **Iqualuit Waste Water Treatment Plant Upgrades**

Rev. No.	Rev. Date	Rev. By	Rev. Description
2	10/11/2018	SH	Re-Submittal
1	07/23/2018	SH	Submittal

Account Executive	Project Owner	Drawn Designer	Drawn By	Drawing Date	Approved By	Approval Date
G. D. Montigny	Philippe Cemosek	CoEE	SH	07/23/2018		

Johnson Controls

Branch Information: Johnson Controls Ltd.
1375 Rue Frank-Carrel
Ville de Québec, QC G1N 2E7
Phone: 418-681-7958

Contract Number: **8N0Y-0079**

Drawing Number: **007.001**

\\10.108.192.72\Field Engineering\NA\CANADA-HOUSTON\FY-18\PRM\8N0Y0079\Drawings\Mechanical Room Cooling CF-1 Flow Diagram.vsd

Electrician/Fitter		Point Information			Controller Information						Panel Information					Intermediate Device				Field Device				
Tag	Point Type	System Name	Object Name	Expanded ID	Controller Details	Trunk Type	Trunk Nbr	Trunk Addr.	Cable Destination Bay/Terminal	Termination Out	Panel	(1) Panel Location	Reference Drawing	Cable Number	Wiring /Tubing	Termination In	Device	Termination Out	Wiring /Tubing	Termination In	Device	Ref Detail Shape	Comment
		CF-1			FEC 2611						EN-4	Mech Room	M601, M500										Power to Controller
		CF-1			FEC 2611	MS/TP	1	8			EN-4	Mech Room	M601, M500										BacNet FC Bus
	UI IN-1	CF-1	DA-T	Discharge Air Temp	FEC 2611	MS/TP	1	8	UI IN-1	IN1, ICOM1	EN-4	Mech Room	M601, M500	4-8-UI IN-1					2/22	2-Wire	TE	F131	
	UI IN-2	CF-1	PFILT-DP	PreFilter Diff Pressure	FEC 2611	MS/TP	1	8	UI IN-2	IN2, +15V	EN-4	Mech Room	M601, M500	4-8-UI IN-2					2/22	-, +	DPT2xxx (mA)	F106	
	UI IN-3	CF-1	SF-S	Supply Fan Status	FEC 2611	MS/TP	1	8	UI IN-3	IN3, ICOM3	EN-4	Mech Room	M601, M500	4-8-UI IN-3	2/22	OUT, COM	Current Relay	Motor Lead	Motor Lead	See wiring detail	Motor Status (Contact)	F301	
	UI IN-4	CF-1	LT-A	Low Temp Alarm	FEC 2611	MS/TP	1	8	UI IN-4	IN4, ICOM4	EN-4	Mech Room	M601, M500	4-8-UI IN-4					2/22 / 2/22 (Unit Shutdown)	LINE, M1, (LINE,M2)	A70 (NO)	F302	
	UI IN-5	CF-1			FEC 2611	MS/TP	1	8	UI IN-5		EN-4	Mech Room	M601, M500	4-8-UI IN-5									
	UI IN-6	CF-1			FEC 2611	MS/TP	1	8	UI IN-6		EN-4	Mech Room	M601, M500	4-8-UI IN-6									
	BI IN-7	CF-1			FEC 2611	MS/TP	1	8	BI IN-7		EN-4	Mech Room	M601, M500	4-8-BI IN-7									
	BI IN-8	CF-1			FEC 2611	MS/TP	1	8	BI IN-8		EN-4	Mech Room	M601, M500	4-8-BI IN-8									
	BO OUT-1	CF-1			FEC 2611	MS/TP	1	8	BO OUT-1		EN-4	Mech Room	M601, M500	4-8-BO OUT-1									
BLDG-LT1	BO OUT-2	CF-1	HEATSYS-FAIL	Heating System Fail	FEC 2611	MS/TP	1	8	BO OUT-2	OUT2, 24V COM	EN-4	Mech Room	M601, M500	4-8-BO OUT-2					2/18	See wiring detail	24VAC OUT (Sw Hi, EXT Source)	F501	REFER DWG 011.002
BLDG-LT1	BO OUT-3	CF-1	ALRM-LT	Light Enable Alarm	FEC 2611	MS/TP	1	8	BO OUT-3	OUT3, 24V COM	EN-4	Mech Room	M601, M500	4-8-BO OUT-3					2/18	See wiring detail	24VAC OUT (Sw Hi, EXT Source)	F501	REFER DWG 011.002
	CO OUT-4	CF-1	HTG-O	Heating Valve	FEC 2611	MS/TP	1	8	CO OUT-4	OUT4, OCOM4,24VAC, COM	EN-4	Mech Room	M601, M500	4-8-CO OUT-4	2/22	COIL+,COIL-	Relay	COM,NO	2/22 / 2/18	GRY, BLK/BLK, RED	M92xx-GGx-x (Vdc) (Ext Source)	F267	
	CO OUT-5	CF-1	OAD-O	OA Damper Output	FEC 2611	MS/TP	1	8	CO OUT-5	OUT5, OCOM5,24VAC, COM	EN-4	Mech Room	M601, M500	4-8-CO OUT-5					2/22 / 2/18	GRY, BLK/BLK, RED	M92xx-GGx-x (Vdc) (Ext Source)	F267	
	CO OUT-6	CF-1	RAD-O	RA Damper Output	FEC 2611	MS/TP	1	8	CO OUT-6	OUT6, OCOM6,24VAC, COM	EN-4	Mech Room	M601, M500	4-8-CO OUT-6					2/22 / 2/18	GRY, BLK/BLK, RED	M92xx-GGx-x (Vdc) (Ext Source)	F267	
	CO OUT-7	CF-1			FEC 2611	MS/TP	1	8	CO OUT-7		EN-4	Mech Room	M601, M500	4-8-CO OUT-7									
	AO OUT-8	CF-1	SF-O	Supply Fan Output	FEC 2611	MS/TP	1	8	AO OUT-8	OUT8, OCOM8	EN-4	Mech Room	M601, M500	4-8-AO OUT-8					2/22	See wiring detail	Output (Voltage)	F201	
	AO OUT-9	CF-1			FEC 2611	MS/TP	1	8	AO OUT-9		EN-4	Mech Room	M601, M500	4-8-AO OUT-9									
		CF-1			NET STAT						EN-4	Mech Room	M601, M500										
		CF-1			NET STAT	SA Bus	1	200			EN-4	Mech Room	M601, M500										BacNet SA Bus
	STAT	CF-1	ZN-T, -SP	Zone Temperature, Setpoint	NET STAT	SA Bus	1	200	STAT	+,-,COM,SA PWR	EN-4	Mech Room	M601, M500	8-4-200-STAT					4/22	+,-,COM,SA PWR	NetSensor (Term,Addressable)	NS102	
BLDG-LT1		CF-1			NET STAT						EN-4	Mech Room	M601, M500										
BLDG-LT1		CF-1			NET STAT	SA Bus	1	201			EN-4	Mech Room	M601, M500										BacNet SA Bus
BLDG-LT1	STAT	CF-1	ZN-T1, -SP	Zone Temperature 1, Setpoint	NET STAT	SA Bus	1	201	STAT	+,-,COM,SA PWR	EN-4	Mech Room	M601, M500	8-4-201-STAT					4/22	+,-,COM,SA PWR	NetSensor (Term,Addressable)	NS102	REFER DWG 011.002

NOTE:

(1) FIELD TO VERIFY EXACT LOCATION TO INSTALL PANEL.

IN CONSIDERATION OF THE RECEIPT OF THIS DOCUMENT, THE RECIPIENT AGREES NOT TO REPRODUCE, COPY, USE OR TRANSMIT THIS DOCUMENT AND/OR THE INFORMATION THEREIN CONTAINED, IN WHOLE OR IN PART, OR TO SUFFER SUCH ACTION BY OTHERS, FOR ANY PURPOSE, EXCEPT WITH THE ADVANCE WRITTEN PERMISSION OF JOHNSON CONTROLS, INC. AND FURTHER AGREES TO SURRENDER SAME TO JOHNSON CONTROLS, INC. UPON DEMAND.

COPYRIGHT JOHNSON CONTROLS, INC. 2018

Drawing Title
Mechanical Room Cooling CF-1 Hardware Schedule

Rev. Nbre	Date	By	Description
1	07/23/2018	SH	Submittal

Project Title
Iqualuit Waste Water Treatment Plant Upgrades

Account Executive	Project Owner	System Designer	Drawn By	Drawing Date	Approved By	Approval Date
G. D. Montigny	Philippe Cernosek	CoEE	SH	07/23/2018		

Johnson Controls

Branch Information
Johnson Controls Ltd.
1375 Rue Frank-Carrel
Ville de Québec, QC G1N 2E7
Phone: 418-681-7958

Contract Number
8N0Y-0079

Drawing Number
007.002

H:\8N0Y\007\9\Drawings\Mechanical Room Cooling CF-1 Hardware Schedule.vsd

DETAIL F131 TEMPERATURE SENSOR INPUT

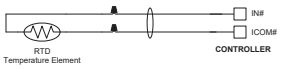

DETAIL F106 CURRENT INPUT - INTERNAL SOURCE (2 Wire)

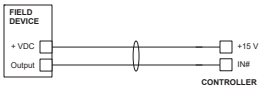

DETAIL F267 0-10VDC OUTPUT to M92xx-GGx and HGx or VA92xx-GGx and HGx

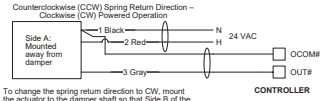

To change the spring return direction to CW, mount the actuator to the damper shaft so that Side B of the actuator is away from the damper. With power applied, the actuator now drives CCW from the 0° position, and spring returns CW.

DETAIL NS102 NET STAT WITH TERMINALS ADDRESSABLE

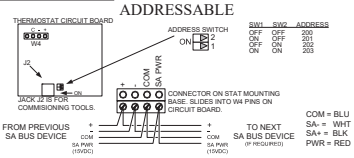

DETAIL F301 BINARY INPUT (DRY CONTACT)

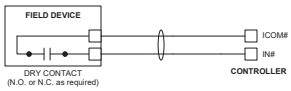

DETAIL F302 N.O. BINARY INPUT - A70

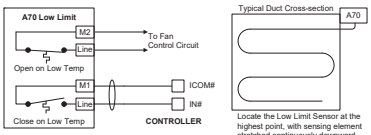

DETAIL F501 24 VAC BINARY OUTPUT (Switch High, EXT Sourced)

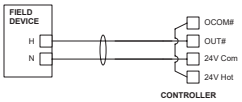

SET TRIAC JUMPER TO EXTERNALLY SOURCED (EXT) FOR ASSOCIATED BINARY OUTPUT(S).

DETAIL F201 ANALOG OUTPUT (VOLTAGE)

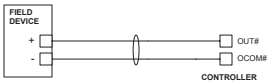

NOTE:

IN CONSIDERATION OF THE RECEIPT OF THIS DOCUMENT, THE RECIPIENT AGREES NOT TO REPRODUCE, COPY, USE OR TRANSMIT THIS DOCUMENT AND/OR THE INFORMATION THEREIN CONTAINED, IN WHOLE OR IN PART, OR TO SUFFER SUCH ACTION BY OTHERS, FOR ANY PURPOSE, EXCEPT WITH THE ADVANCE WRITTEN PERMISSION OF JOHNSON CONTROLS, INC. AND FURTHER AGREES TO SURRENDER SAME TO JOHNSON CONTROLS, INC. UPON DEMAND.

COPYRIGHT JOHNSON CONTROLS, INC. 2018

Drawing Title
Mechanical Room Cooling CF-1 Wiring Details

Project Title
Iqualuit Waste Water Treatment Plant Upgrades

Rev.	Mark	Date	Rev. By	Description
1		07/23/2018	SH	Submittal

Account Executive	Project Owner	System Designer	Drawn By	Drawing Date	Approved By	Approval Date
G. D. Montigny	Philippe Cernosek	CoEE	SH	07/23/2018		

Johnson Controls

Branch Information
Johnson Controls Ltd.
1375 Rue Frank-Carrel
Ville de Québec, QC G1N 2E7
Phone: 418-681-7958

Contract Number: **8N0Y-0079**

Drawing Number: **007.003**

H:\8N0Y0079\Drawings\Mechanical Room Cooling CF-1 Wiring Details.vsd

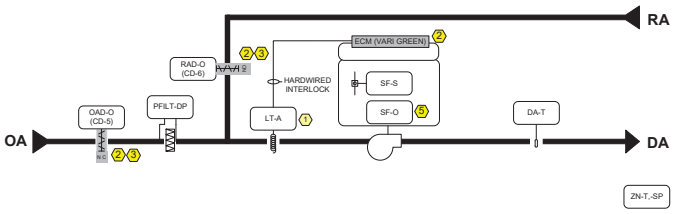

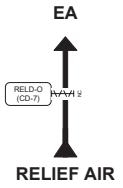

BILL OF MATERIALS

Tag	Qty	Part Number	Description
Field Devices:			
DA-T	1	TE-6351M-1	DUCT PROBE SENSOR 8 IN
LT-A	1	A70HA-1C	DUCT,MLT,SP=15-55 F (-9-13 C),STG=2
	1	TE-6001-8	AVERAGING ELEMENT HOLDER
OAD-O	1	M9208-GGA-3	ACT.ROTARY PROPORTIONAL
PFILT-DP	1	DPT2641-2R5D-1	DP TRANS, DIF, 0 TO 2.5
	2	FTG18A-600R	REMOTE MTD PROBE
RAD-O	1	M9208-GGA-3	ACT.ROTARY PROPORTIONAL
RELAD-O	1	M9208-GGA-3	ACT.ROTARY PROPORTIONAL
SF-S	1	CSDSC-C50100L0	CURR SW SELF CAL CLMP
ZN-T, -SP	1	NS-BTB7003-0	3X4.5,T.F/C.D.A/,TB ADRS
4 Panel Devices:			
CF2-CTRL	1	MS-FEC2611-0	FEC2611-0,FEC17

ZONE CLASSIFICATION AREA: UPPER LEVEL, NORMAL AREA

SUPPLY FAN ECM MOTOR WIRING

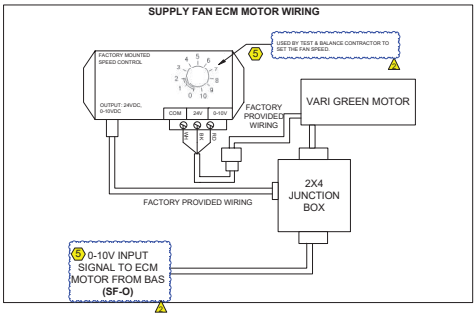

SR. NO.	SYSTEM NAME	SERVICE	LOCATION	S/A AIRFLOW (L/s)	SUPPLY FAN ESP (Pa)	SF HP	ELEC V/PH/HZ
1	CF-2	COOLING	ELEC ROOM GRID F:6	400	125	1/4	115/1/60

SEQUENCE OF OPERATION:

GENERAL:

1. THE AIR SYSTEM PROVIDES ECONOMIZER FREE COOLING TO ELECTRICAL ROOM.

2. WHEN ROOM TEMPERATURE (ZN-T) IS ABOVE THERMOSTAT COOLING SETPOINT, INTIALLY SET AT 24 DEG C (USER ADJUSTABLE), ENERGIZE COOLING SYSTEM.

3. ON CALL FOR COOLING, ENERGIZE COOLING FAN (SF-O), MODULATE THE RETURN AIR, RELIEF AIR AND OUTDOOR AIR DAMPERS TO SATISFY ZN-T SETPOINT. COOLING FAN WILL BE STARTED BY BAS (SF-O) TO PROVIDE CONSTANT SPEED DETERMINED BY TEST & BALANCE CONTRACTOR.

4. IF THE DISCHARGE AIR TEMP IS LESS THAN 5 DEG C FOR GREATER THAN FIVE (5) MINUTES, LOCK OUT THE COOLING FAN, DE-ENERGIZE DAMPERS AND ALARM AT OWS. THE ALARM SUPPRESSION TIME IS TO BE ADJUSTABLE AT THE OWS.

5. IF THE ELECTRICAL ROOM TEMPERATURE EXCEEDS 38 DEG C (USER ADJUSTABLE) FOR LONGER THAN 15 MIN, ALARM TO THE OWS.

6. ON A HIGH-PRESSURE DROP AT THE FILTERS ALARM TO THE OWS. SET POINT TO BE FIELD DETERMINED AND ADJUSTABLE AT OWS.

NOTES:

1. FIELD TO VERIFY EXACT LOCATION TO INSTALL LT-A.
2. DEVICES IN GRAY PROVIDED BY OTHERS.
3. DAMPERS ARE PROVIDED WITH THE UNIT BY UNIT MANUFACTURER.
4. REFER PANEL DETAILS ON DWG 012.006.
5. 0-10V SIGNAL PROVIDED BY BAS TO ECM PANEL. 0 V SIGNAL WILL INDICATE FAN-OFF COMMAND AND 10V SIGNAL WILL INDICATE FAN ON COMMAND. FAN SPEED WILL BE MANUALLY SET BY TEST AND BALANCE CONTRACTORS.

IN CONSIDERATION OF THE RECEIPT OF THIS DOCUMENT, THE RECIPIENT AGREES NOT TO REPRODUCE, COPY, USE OR TRANSMIT THIS DOCUMENT AND/OR THE INFORMATION THEREIN CONTAINED, IN WHOLE OR IN PART, OR TO SUFFER SUCH ACTION BY OTHERS, FOR ANY PURPOSE, EXCEPT WITH THE ADVANCE WRITTEN PERMISSION OF JOHNSON CONTROLS, INC. AND FURTHER AGREES TO SURRENDER SAME TO JOHNSON CONTROLS, INC. UPON DEMAND.

COPYRIGHT JOHNSON CONTROLS, INC. 2018

Drawing Title
Electrical Room Cooling CF-2 Flow Diagram

Project Title
Iqualuit Waste Water Treatment Plant Upgrades

Rev.	Date	Rev. By	Description
2	10/11/2018	SH	Re-Submittal
1	07/23/2018	SH	Submittal

Account Executive	Project Owner	Concern Designer	Drawn By	Drawing Date	Approved By	Approval Date
G. D. Montigny	Philippe Cemosek	CoEE	SH	07/23/2018		

Johnson Controls

Branch Information
Johnson Controls Ltd.
1375 Rue Frank-Carrel
Ville de Québec, QC G1N 2E7
Phone: 418-681-7958

Contract Number **8N0Y-0079**

Drawing Number **007.004**

\\10.109.192.72\Field Engineering\WA\CANADA-HOUSTON\FY-19\PFM\8N0Y0079\Drawings\Electrical Room Cooling CF-2 Flow Diagram.vsd

Electrician/Fitter	Point Information				Controller Information						Panel Information				Intermediate Device				Field Device				
Tag	Point Type	System Name	Object Name	Expanded ID	Controller Details	Trunk Type	Trunk Nbr	Trunk Addr.	Cable Destination Bav/Terminal	Termination Out	Panel	① Panel Location	Reference Drawing	Cable Number	Wiring /Tubing	Termination In	Device	Termination Out	Wiring /Tubing	Termination In	Device	Ref Detail Shape	Comment
		CF-2			FEC 2611						EN-6	Elec Room	M601, M402										Power to Controller
		CF-2			FEC 2611	MS/TP	1	18			EN-6	Elec Room	M601, M402										BacNet FC Bus
	UI IN-1	CF-2	DA-T	Discharge Air Temp	FEC 2611	MS/TP	1	18	UI IN-1	IN1, ICOM1	EN-6	Elec Room	M601, M402	6-18-UI IN-1					2/22	2-Wire	TE	F131	
	UI IN-2	CF-2	PFILT-DP	PreFilter Diff Pressure	FEC 2611	MS/TP	1	18	UI IN-2	IN2, +15V	EN-6	Elec Room	M601, M402	6-18-UI IN-2					2/22	-, +	DPT2xxx (mA)	F106	
	UI IN-3	CF-2	SF-S	Supply Fan Status	FEC 2611	MS/TP	1	18	UI IN-3	IN3, ICOM3	EN-6	Elec Room	M601, M402	6-18-UI IN-3	2/22	OUT, COM	Current Relay	Motor Lead	Motor Lead	See wiring detail	Motor Status (Contact)	F301	
	UI IN-4	CF-2	LT-A	Low Temp Alarm	FEC 2611	MS/TP	1	18	UI IN-4	IN4, ICOM4	EN-6	Elec Room	M601, M402	6-18-UI IN-4					2/22 / '2/22 (Unit Shutdown)	LINE, M1, (LINE,M2)	A70 (NO)	F302	
	UI IN-5	CF-2			FEC 2611	MS/TP	1	18	UI IN-5		EN-6	Elec Room	M601, M402	6-18-UI IN-5									
	UI IN-6	CF-2			FEC 2611	MS/TP	1	18	UI IN-6		EN-6	Elec Room	M601, M402	6-18-UI IN-6									
	BI IN-7	CF-2			FEC 2611	MS/TP	1	18	BI IN-7		EN-6	Elec Room	M601, M402	6-18-BI IN-7									
	BI IN-8	CF-2			FEC 2611	MS/TP	1	18	BI IN-8		EN-6	Elec Room	M601, M402	6-18-BI IN-8									
	BO OUT-1	CF-2			FEC 2611	MS/TP	1	18	BO OUT-1		EN-6	Elec Room	M601, M402	6-18-BO OUT-1									
	BO OUT-2	CF-2			FEC 2611	MS/TP	1	18	BO OUT-2		EN-6	Elec Room	M601, M402	6-18-BO OUT-2									
	BO OUT-3	CF-2			FEC 2611	MS/TP	1	18	BO OUT-3		EN-6	Elec Room	M601, M402	6-18-BO OUT-3									
	CO OUT-4	CF-2	RELD-O	Relief Damper Output	FEC 2611	MS/TP	1	18	CO OUT-4	OUT4, OCOM4,24VAC, COM	EN-6	Elec Room	M601, M402	6-18-CO OUT-4					2/22 / 2/18	GRY, BLK/BLK, RED	M92xx-GGx-x (Vdc) (Ext Source)	F267	
	CO OUT-5	CF-2	OAD-O	OA Damper Output	FEC 2611	MS/TP	1	18	CO OUT-5	OUT5, OCOM5,24VAC, COM	EN-6	Elec Room	M601, M402	6-18-CO OUT-5					2/22 / 2/18	GRY, BLK/BLK, RED	M92xx-GGx-x (Vdc) (Ext Source)	F267	
	CO OUT-6	CF-2	RAD-O	RA Damper Output	FEC 2611	MS/TP	1	18	CO OUT-6	OUT6, OCOM6,24VAC, COM	EN-6	Elec Room	M601, M402	6-18-CO OUT-6					2/22 / 2/18	GRY, BLK/BLK, RED	M92xx-GGx-x (Vdc) (Ext Source)	F267	
	CO OUT-7	CF-2			FEC 2611	MS/TP	1	18	CO OUT-7		EN-6	Elec Room	M601, M402	6-18-CO OUT-7									
	AO OUT-8	CF-2	SF-O	Supply Fan Output	FEC 2611	MS/TP	1	18	AO OUT-8	OUT8, OCOM8	EN-6	Elec Room	M601, M402	6-18-AO OUT-8					2/22	See wiring detail	Output (Voltage)	F201	
	AO OUT-9	CF-2			FEC 2611	MS/TP	1	18	AO OUT-9		EN-6	Elec Room	M601, M402	6-18-AO OUT-9									
		CF-2			NET STAT						EN-6	Elec Room	M601, M402										
		CF-2			NET STAT	SA Bus	1	200			EN-6	Elec Room	M601, M402										BacNet SA Bus
	STAT	CF-2	ZN-T, -SP	Zone Temperature, Setpoint	NET STAT	SA Bus	1	200	STAT	+,-,COM,SA PWR	EN-6	Elec Room	M601, M402	18-6-200-STAT					4/22	+,-,COM,SA PWR	NetSensor (Term,Addressable)	NS102	

DETAIL F131 TEMPERATURE SENSOR INPUT

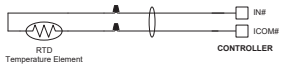

DETAIL F106 CURRENT INPUT - INTERNAL SOURCE (2 Wire)

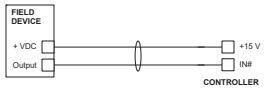

DETAIL F267 0-10VDC OUTPUT to M92xx-GGx and HGx or VA92xx-GGx and HGx

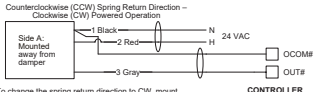

To change the spring return direction to CW, mount the actuator to the damper shaft so that Side B of the actuator is away from the damper. With power applied, the actuator now drives CCW from the 0° position, and spring returns CW.

DETAIL NS102 NET STAT WITH TERMINALS ADDRESSABLE

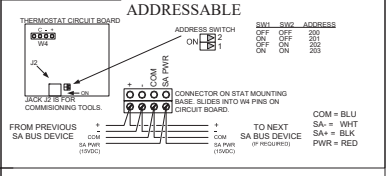

DETAIL F301 BINARY INPUT (DRY CONTACT)

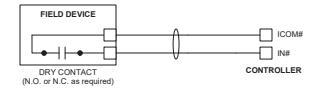

DETAIL F302 N.O. BINARY INPUT - A70

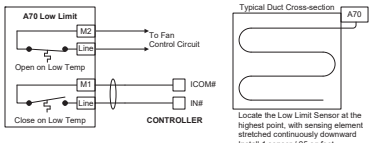

DETAIL F201 ANALOG OUTPUT (VOLTAGE)

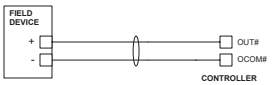

NOTE:

① FIELD TO VERIFY EXACT LOCATION TO INSTALL PANEL.

IN CONSIDERATION OF THE RECEIPT OF THIS DOCUMENT, THE RECIPIENT AGREES NOT TO REPRODUCE, COPY, USE OR TRANSMIT THIS DOCUMENT AND/OR THE INFORMATION THEREIN CONTAINED, IN WHOLE OR IN PART, OR TO SUFFER SUCH ACTION BY OTHERS, FOR ANY PURPOSE, EXCEPT WITH THE ADVANCE WRITTEN PERMISSION OF JOHNSON CONTROLS, INC. AND FURTHER AGREES TO SURRENDER SAME TO JOHNSON CONTROLS, INC. UPON DEMAND.

COPYRIGHT JOHNSON CONTROLS, INC. 2018

Drawing Title
Electrical Room Cooling CF-2
Hardware Schedule & Wiring Details

Project Title
Iqualuit Waste Water Treatment Plant Upgrades

Rev.	Rev. Nbr.	Date	By	Description
A	1	07/23/2018	SH	Submittal

Account Executive	Project Owner	System Designer	Drawn By	Drawing Date	Approved By	Approval Date
G. D. Montigny	Philippe Cernosek	CoEE	SH	07/23/2018		

Johnson Controls

Branch Information
Johnson Controls Ltd.
1375 Rue Frank-Carrel
Ville de Québec, QC G1N 2E7
Phone: 418-681-7958

Contract Number **8N0Y-0079**

Drawing Number **007.005**

H:\8N0Y\007\Drawings\Electrical Room Cooling CF-2 Hardware Point Schedule & Wiring Details.vsd

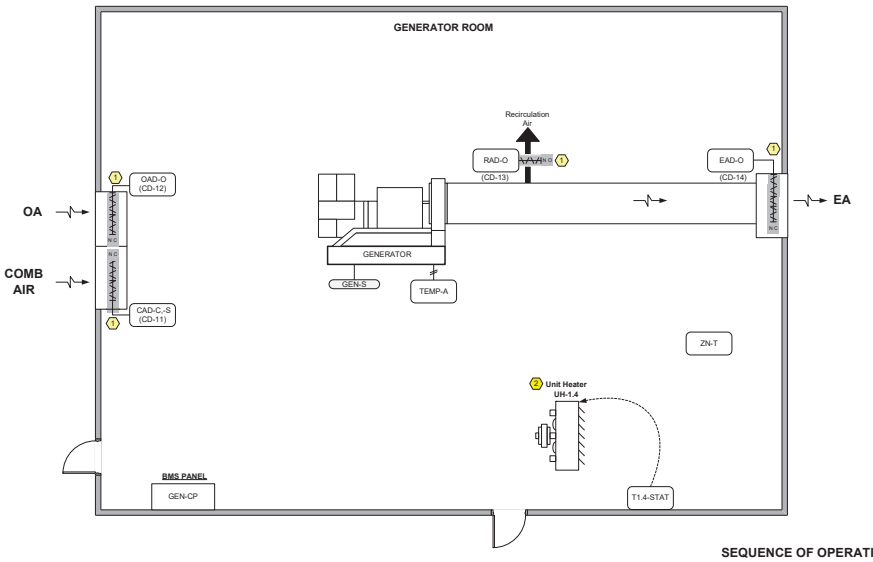

BILL OF MATERIALS

	Designation	Qty	Part Number	Description
	Field Devices:			
	CAD-C	1	M9220-BGC-3	20NM,SR,ACT,24V ON/OFF,2 AUX SW
	EAD-O	1	M9220-GGA-3	20NM,SR,DPR ACT,0-10 VDC,24 VAC
	OAD-O	1	M9220-GGA-3	20NM,SR,DPR ACT,0-10 VDC,24 VAC
	RAD-O	1	M9220-GGA-3	20NM,SR,DPR ACT,0-10 VDC,24 VAC
	TEMP-A	1	RBUHC	SPDT,10A,HC=10-30 VACIDC,W/LED
	ZN-T	1	NS-BTB7003-0	3X4.5.T.F/C.D.AJ.TB ADRS
3	Panel Devices:			
4	GEN-CTRL	1	MS-FAC2611-0	CTRL 6UI, 2BI, 3BO, 4CO,

ZONE CLASSIFICATION AREA: LOWER LEVEL, ~~CATEGORY 1, WET AREA~~
NORMAL AREA

SEQUENCE OF OPERATION:

GENERATOR COOLING:

1. THE ELECTRONIC GENERATOR HAS BEEN PROVIDED WITH A VENTILATION SYSTEM TO PROVIDE ECONOMIZER FREE COOLING WHILE THE GENERATOR IS OPERATING AND THE UH PROVIDES HEATING WHILE THE GENERATOR IS OFF. WHEN THE GENERATOR STARTS. THE UH IS TO BE LOCKED OUT (BASED ON THE LINE T-STAT SETPOINT) AND THE TWO POSITION COMBUSTION AIR DAMPER (CAD-C) OPENS FULLY. IF THE DAMPER DOES NOT OPEN ALARM TO THE OWS AND OPEN THE MAIN O/A DAMPERS (OAD-O) TO MINIMUM 15% OPEN.
2. WHILE THE GENERATOR IS OPERATING, THE O/A (OAD-O), R/A (RAD-O) AND E/A (EAD-O) DAMPERS ARE TO MODULATE IN ECONOMIZER MIXING MODE TO MAINTAIN THE SPACE TEMPERATURE (ZN-T) AT SET POINT.
3. IF THE GENERATOR IS ON AND THE SPACE TEMP (ZN-T) IS ABOVE 38 DEG C, ALARM WILL BE GENERATED AT THE OWS AND SIGNAL WILL BE SENT TO PLC CONTROLLER.
4. AFTER THE GENERATOR IS STAGED OFF, IF THE SPACE TEMPERATURE (ZN-T) IS LESS THAN 30 DEG C, DAMPERS TO NORMAL POSITIONS. IF THE SPACE TEMPERATURE (ZN-T) IS GREATER THAN 30 DEG C, CONTINUE TO ENABLE AND MODULATE THE ECONOMIZER DAMPERS TO MAINTAIN SPACE TEMPERATURE (ZN-T) AT A MAXIMUM 30DEGC. AFTER COOL DOWN IS COMPLETED DAMPERS TO NORMAL POSITION.

MONITORING POINTS BY BMS:

1.GENERATOR STATUS (GEN-S)

NOTES:

1. DAMPERS PROVIDED BY OTHERS & DAMPER ACTUATORS ARE PROVIDED BY JCI.
2. REFER DWG. 010.001 FOR UNIT HEATER CONTROL AND WIRING DETAILS.
3. REFER PANEL DETAILS ON DWG 012.002.
4. MS-FAC2611-0 REAL TIME CONTROLLER PROVIDED FOR GENERATOR IS CAPABLE OF PROVIDING INTENDED OPERATION IN CASE OF COMMUNICATION FAILURE.

IN CONSIDERATION OF THE RECEIPT OF THIS DOCUMENT, THE RECIPIENT AGREES NOT TO REPRODUCE, COPY, USE OR TRANSMIT THIS DOCUMENT AND/OR THE INFORMATION THEREIN CONTAINED, IN WHOLE OR IN PART, OR TO SUFFER SUCH ACTION BY OTHERS, FOR ANY PURPOSE, EXCEPT WITH THE ADVANCE WRITTEN PERMISSION OF JOHNSON CONTROLS, INC. AND FURTHER AGREES TO SURRENDER SAME TO JOHNSON CONTROLS, INC. UPON DEMAND.

COPYRIGHT JOHNSON CONTROLS, INC. 2018

Drawing Title
Generator Room Ventilation Flow Diagram

Project Title
Iqualuit Waste Water Treatment Plant Upgrades

Rev. No.	Rev. Date	Rev. By	Rev. Description
1	07/23/2018	SH	Submittal

Account Executive	Project Owner	Drawn Designer	Drawn By	Drawing Date	Approved By	Approval Date
G. D. Montigny	Philippe Cemosek	CoEE	SH	07/23/2018		

Johnson Controls

Branch Information
Johnson Controls Ltd.
1375 Rue Frank-Carrel
Ville de Québec, QC G1N 2E7
Phone: 418-681-7958

Contract Number **8N0Y-0079**

Drawing Number **008.001**

I:\10.109.192.72\Field Engineering\NA\CANADA-HOUSTON\FY-18\PFM\8N0Y0079\Drawings\Generator Room Ventilation Flow Layout.vsd

Electrician/Fitter	Point Information				Controller Information					Panel Information				Intermediate Device				Field Device				
Tag	Point Type	System Name	Object Name	Expanded ID	Controller Details	Trunk Type	Trunk Nbr	Trunk Addr.	Cable Destination Bay/Terminal	Termination Out	Panel	(1) Panel Location	Reference Drawing	Cable Number	Wiring /Tubing	Termination In	Device	Termination Out	Wiring /Tubing	Termination In	Device	Ref Detail Shape	Comment
		GEN ROOM			FAC 2611						EN-2	GENERATOR ROOM-112	M601										Power to Controller
		GEN ROOM			FAC 2611	MS/TP	1	7			EN-2	GENERATOR ROOM-112	M601										BacNet FC Bus
	UI IN-1	GEN ROOM	GEN-S	Generator Status	FAC 2611	MS/TP	1	7	UI IN-1	IN1, ICOM1	EN-2	GENERATOR ROOM-112	M601	2-12-UI IN-1					2/22	See wiring detail	Dry Contact	F301	
	UI IN-2	GEN ROOM	CAD-S	Combustion Air Damper Status	FAC 2611	MS/TP	1	7	UI IN-2	IN2, ICOM2	EN-2	GENERATOR ROOM-112	M601	2-12-UI IN-2					2/22	See wiring detail	M92xx-xxx-x EndSwitch	F365	
	UI IN-3	GEN ROOM			FAC 2611	MS/TP	1	7	UI IN-3		EN-2	GENERATOR ROOM-112	M601	2-12-UI IN-3									
	UI IN-4	GEN ROOM			FAC 2611	MS/TP	1	7	UI IN-4		EN-2	GENERATOR ROOM-112	M601	2-12-UI IN-4									
	UI IN-5	GEN ROOM			FAC 2611	MS/TP	1	7	UI IN-5		EN-2	GENERATOR ROOM-112	M601	2-12-UI IN-5									
	UI IN-6	GEN ROOM			FAC 2611	MS/TP	1	7	UI IN-6		EN-2	GENERATOR ROOM-112	M601	2-12-UI IN-6									
	BI IN-7	GEN ROOM			FAC 2611	MS/TP	1	7	BI IN-7		EN-2	GENERATOR ROOM-112	M601	2-12-BI IN-7									
	BI IN-8	GEN ROOM			FAC 2611	MS/TP	1	7	BI IN-8		EN-2	GENERATOR ROOM-112	M601	2-12-BI IN-8									
	BO OUT-1	GEN ROOM	CAD-C	Combustion Air Damper Command	FAC 2611	MS/TP	1	7	BO OUT-1	OUT1, 24V COM	EN-2	GENERATOR ROOM-112	M601	2-12-BO OUT-1	2/22	COIL+,COIL-	Relay	COM,NO	2/22	RED, BLK	M92xx-BGx-x (On-Off) (Sw HI, EXT Source)	F578	
	BO OUT-2	GEN ROOM	TEMP-A	Generator Zone Temp Alarm	FAC 2611	MS/TP	1	7	BO OUT-2	OUT2, 24V COM	EN-2	GENERATOR ROOM-112	M601	2-12-BO OUT-2					2/18	See wiring detail	24VAC OUT (Sw HI, EXT Source)	F501	
	BO OUT-3	GEN ROOM			FAC 2611	MS/TP	1	7	BO OUT-3		EN-2	GENERATOR ROOM-112	M601	2-12-BO OUT-3									
	CO OUT-4	GEN ROOM	RAD-O	Return Air Damper Output	FAC 2611	MS/TP	1	7	CO OUT-4	OUT4, OCOM4,24VAC, COM	EN-2	GENERATOR ROOM-112	M601	2-12-CO OUT-4					2/22 / 2/18	GRY, BLK/BLK, RED	M92xx-GGx-x (Vdc) (Ext Source)	F267	
	CO OUT-5	GEN ROOM	EAD-O	Exhaust Air Damper Output	FAC 2611	MS/TP	1	7	CO OUT-5	OUT5, OCOM5,24VAC, COM	EN-2	GENERATOR ROOM-112	M601	2-12-CO OUT-5					2/22 / 2/18	GRY, BLK/BLK, RED	M92xx-GGx-x (Vdc) (Ext Source)	F267	
	CO OUT-6	GEN ROOM	OAD-O	Outside Air Damper Output	FAC 2611	MS/TP	1	7	CO OUT-6	OUT6, OCOM6,24VAC, COM	EN-2	GENERATOR ROOM-112	M601	2-12-CO OUT-6					2/22 / 2/18	GRY, BLK/BLK, RED	M92xx-GGx-x (Vdc) (Ext Source)	F267	
	CO OUT-7	GEN ROOM			FAC 2611	MS/TP	1	7	CO OUT-7		EN-2	GENERATOR ROOM-112	M601	2-12-CO OUT-7									
	AO OUT-8	GEN ROOM			FAC 2611	MS/TP	1	7	AO OUT-8		EN-2	GENERATOR ROOM-112	M601	2-12-AO OUT-8									
	AO OUT-9	GEN ROOM			FAC 2611	MS/TP	1	7	AO OUT-9		EN-2	GENERATOR ROOM-112	M601	2-12-AO OUT-9									
		GEN ROOM			NET STAT						EN-2	GENERATOR ROOM-112	M601										
		GEN ROOM			NET STAT	SA Bus	1	200			EN-2	GENERATOR ROOM-112	M601										BacNet SA Bus
	STAT	GEN ROOM	ZN-T, -SP	Zone Temperature, Setpoint	NET STAT	SA Bus	1	200	STAT	+,-,COM,SA PWR	EN-2	GENERATOR ROOM-112	M601	7-2-200-STAT					4/22	+,-,COM,SA PWR	NetSensor (Term,Addressable)	NS102	

DETAIL F301 BINARY INPUT (DRY CONTACT)

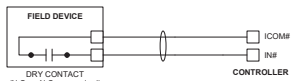

DETAIL F131 TEMPERATURE SENSOR INPUT

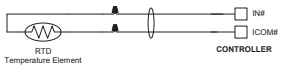

DETAIL F365 BINARY INPUT from M92xx-xxx-x, and VA92xx-xxx-x

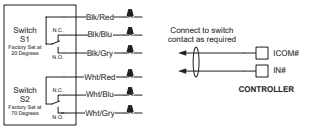

DETAIL F501 24 VAC BINARY OUTPUT (Switch High, EXT Sourced)

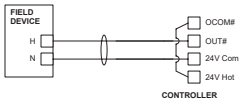

SET TRIAC JUMPER TO EXTERNALLY SOURCED (EXT) FOR ASSOCIATED BINARY OUTPUT(S).

DETAIL F267 0-10VDC OUTPUT to M92xx-GGx and HGx or VA92xx-GGx and HGx

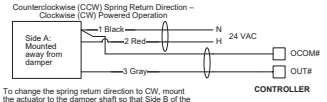

To change the spring return direction to CW, mount the actuator to the damper shaft so that Side B of the actuator is away from the damper. With power applied, the actuator now drives CCW from the 0° position, and spring returns CW.

DETAIL F578 ON-OFF CONTROL to M92xx-BGx-x and VA92xx-BGx-x (Switch High, EXT Sourced)

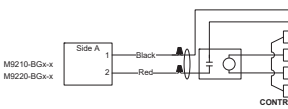

SET TRIAC JUMPER TO EXTERNALLY SOURCED (EXT) FOR ASSOCIATED BINARY OUTPUT(S).

NOTE:

(1) FIELD TO VERIFY EXACT LOCATION TO INSTALL PANEL.

IN CONSIDERATION OF THE RECEIPT OF THIS DOCUMENT, THE RECIPIENT AGREES NOT TO REPRODUCE, COPY, USE OR TRANSMIT THIS DOCUMENT AND/OR THE INFORMATION THEREIN CONTAINED, IN WHOLE OR IN PART, OR TO SUFFER SUCH ACTION BY OTHERS, FOR ANY PURPOSE, EXCEPT WITH THE ADVANCE WRITTEN PERMISSION OF JOHNSON CONTROLS, INC. AND FURTHER AGREES TO SURRENDER SAME TO JOHNSON CONTROLS, INC. UPON DEMAND.

COPYRIGHT JOHNSON CONTROLS, INC. 2018

Drawing Title
Generator Room Ventilation Hardware Schedule & Wiring Details

Project Title
Iqualuit Waste Water Treatment Plant Upgrades

Rev. No.	Rev.	Date	By	Description
1	1	07/23/2018	SH	Submittal

Account Executive	Project Owner	System Designer	Drawn By	Drawing Date	Approved By	Approval Date
G. D. Montigny	Philippe Cemosek	CoEE	SH	07/23/2018		

Johnson Controls

Branch Information
Johnson Controls Ltd.
1375 Rue Frank-Carrel
Ville de Québec, QC G1N 2E7
Phone: 418-681-7958

Contract Number
8N0Y-0079

Drawing Number
008.002

H:\8N0Y\00793\Drawings\Generator Room Ventilation Hardware Schedule & Wiring Details.vsd

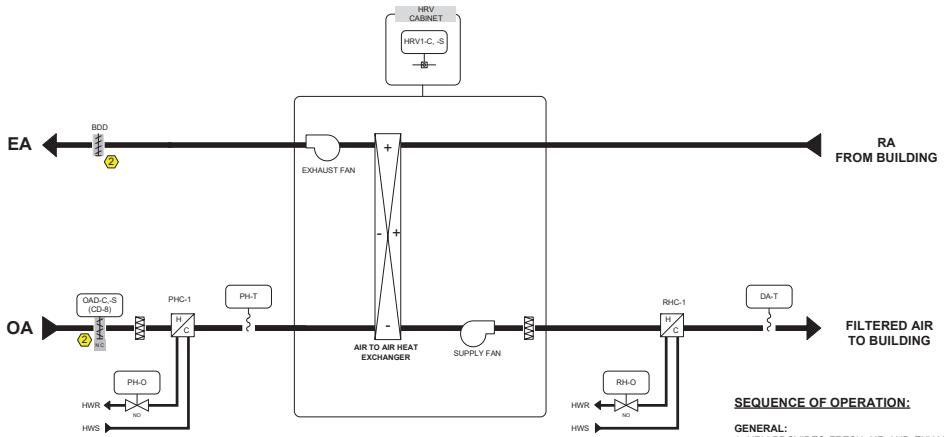

BILL OF MATERIALS

Designation	Qty	Part Number	Description
Field Devices:			
DA-T	1	TE-6001-8	AVERAGING ELEMENT HOLDER
	1	TE-6328P-1	SENSOR,T-PT-EQV,20FT AVG,1K
HRV1-C,-S	1	CSDSC-C50100L1	CURR SW SELF CAL CLMP
OAD-C	1	M9220-BGC-3	20NM,SR,ACT,24V ON/OFF,2 AUX SW
PH-T	1	TE-6001-8	AVERAGING ELEMENT HOLDER
	1	TE-6328P-1	SENSOR,T-PT-EQV,20FT AVG,1K
TIMER-S	1	93505C	0-6 HR TIMER W/KNOB AND TRIM PLATE
Panel Devices:			
HRV1-CTRL	1	MS-FEC2611-0	FEC2611-0,FEC17
Other Devices:			
PH-O	1	VALVE	REFER VALVE SCHEDULE
RH-O	1	VALVE	REFER VALVE SCHEDULE

ZONE CLASSIFICATION AREA: UPPER LEVEL, NORMAL AREA

HRV SCHEDULE

SR. NO.	SYSTEM NAME	SERVING	S/A AIRFLOW (L/s)	E/A AIRFLOW (L/s)	SUPPLY FAN ESP (Pa)	SUPPLY FAN MOTOR (Watts)	EXHAUST FAN ESP (Pa)	EXHAUST FAN MOTOR (Watts)
1	HRV-1	UPPER LVL OFFICE /LAB	85	85	125	195	125	195

TIMER-S WIRING

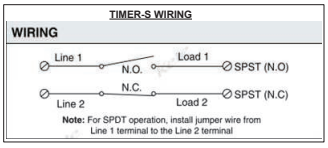

SEQUENCE OF OPERATION:

GENERAL:
1. HRV PROVIDES FRESH AIR AND EXHAUST AIR FOR THE NORMALLY OCCUPIED AREA OF THE WWTP INCLUDING THE OFFICE, WASHROOM AND LABORATORY. THE HRV SYSTEM INCLUDES THE HRV, OUTDOOR AIR 2-POSITION NORMAL CLOSED DAMPER, HYDRONIC PRE-HEAT HEATING COIL AND HYDRONIC RE-HEAT HEATING COIL.
2.0-6 HOUR SPRING RETURN TIMER WILL PROVIDE LOCAL OVERRIDE (TIMER-S). TIMER WILL ENABLE HRV-1 UNIT WHEN NOT IN THE OFF POSITION.

TIME SCHEDULE:
1.SCHEDULE TO BE FULLY ADJUSTABLE AT THE OWS. HRV-1 OPERATES BASED ON A 365 DAY TIME BASED SCHEDULE. INITIAL TIME-BASED SETPOINT (CONFIRM WITH OWNER):
- HRV-1 ON: MON-FRI @ 07.30 HRS
- HRV-1 OFF: MON-FRI @ 17.00 HRS
2. ON START-UP, HRV OUTDOOR AIR DAMPER (OAD-C) OPENS FULLY. WHEN DAMPER POSITION PROVEN BY END-SWITCH(OAD-ES), ENERGIZE HRV (HRV-C).

PREHEAT COIL:
1. EMCS TO MODULATE TWO WAY CONTROL VALVE (PH-O) TO MAINTAIN MINIMUM SAT (PH-T) SETPOINT INTO HEAT TRANSFER CORE. INITAL SETPOINT = -10 DEG C.

REHEAT COIL:
1. EMCS TO MODULATE TWO WAY CONTROL VALVE (RH-O) TO MAINTAIN MINIMUM SAT (DA-T) SETPOINT. INITAL SETPOINT = 18 DEG C.

TEMPERATURE CONTROL:
IN EVENT THAT SAT TEMPERATURE (DA-T) IS LESS THAN 10 DEG C AS SENSED BY DUCT MOUNTED AVERAGING TYPE TEMPERATURE SENSOR, ALARM TROUBLE AT OWS.

MONITORING POINTS BY BMS:
1.HRV1 STATUS (HRV1-S)

NOTES:
1. LOCAL OVERRIDE SWITCH WILL BE PROVIDED BY OTHERS AND MONITORED ON BAS.
2. DAMPER PROVIDED WITH THE UNIT BY UNIT MANUFACTURER.
3. REFER PANEL DETAILS ON DWG 012.003.

IN CONSIDERATION OF THE RECEIPT OF THIS DOCUMENT, THE RECIPIENT AGREES NOT TO REPRODUCE, COPY, USE OR TRANSMIT THIS DOCUMENT AND/OR THE INFORMATION THEREIN CONTAINED, IN WHOLE OR IN PART, OR TO SUFFER SUCH ACTION BY OTHERS, FOR ANY PURPOSE, EXCEPT WITH THE ADVANCE WRITTEN PERMISSION OF JOHNSON CONTROLS, INC. AND FURTHER AGREES TO SURRENDER SAME TO JOHNSON CONTROLS, INC. UPON DEMAND.

COPYRIGHT JOHNSON CONTROLS, INC. 2018

Drawing Title: **HRV-1 Flow Diagram**

Project Title: **Iqaluit Waste Water Treatment Plant Upgrades**

Rev. No.	Rev.	Date	Rev. By	Rev. Description
2		10/11/2018	SH	Re-Submittal
1		07/23/2018	SH	Submittal

Account Executive	Project Owner	Drawn Designer	Drawn By	Drawing Date	Approved By	Approval Date
G. D. Montigny	Philippe Cemosek	CoEE	SH	07/23/2018		

Johnson Controls

Branch Information: Johnson Controls Ltd.
1375 Rue Frank-Carrel
Ville de Québec, QC G1N 2E7
Phone: 418-681-7958

Contract Number: **8N0Y-0079**

Drawing Number: **009.001**

1:\10.109.192.72\Field Engineering\HVAC\CANADA-HOUSTON\IFY-18\PFM\8N0Y0079\Drawings\HRV-1 Flow Layout.vsd

Electrician/Fitter	Point Information				Controller Information						Panel Information				Intermediate Device					Field Device				
Tag	Point Type	System Name	Object Name	Expanded ID	Controller Details	Trunk Type	Trunk Nbr	Trunk Addr.	Cable Destination Bay/Terminal	Termination Out	Panel	(1) Panel Location	Reference Drawing	Cable Number	Wiring /Tubing	Termination In	Device	Termination Out	Location	Wiring /Tubing	Termination In	Device	Ref Detail Shape	Comment
		HRV-1			FEC 2611						EN-3	UPPER LVL, MECH RM	M601											Power to Controller
		HRV-1			FEC 2611	MS/TP	1	12			EN-3	UPPER LVL, MECH RM	M601											BacNet FC Bus
	UI IN-1	HRV-1	PH-T	Preheat Temp	FEC 2611	MS/TP	1	12	UI IN-1	IN1, ICOM1	EN-3	UPPER LVL, MECH RM	M601	3-12-UI IN-1						2/22	2-Wire	TE	F131	
	UI IN-2	HRV-1	DA-T	Discharge Air Temp	FEC 2611	MS/TP	1	12	UI IN-2	IN2, ICOM2	EN-3	UPPER LVL, MECH RM	M601	3-12-UI IN-2						2/22	2-Wire	TE	F131	
	UI IN-3	HRV-1	OAD-S	OA Damper Status	FEC 2611	MS/TP	1	12	UI IN-3	IN3, ICOM3	EN-3	UPPER LVL, MECH RM	M601	3-12-UI IN-3						2/22	See wiring detail	M92xx-xxx-x EndSwitch	F365	
	UI IN-4	HRV-1			FEC 2611	MS/TP	1	12	UI IN-4		EN-3	UPPER LVL, MECH RM	M601	3-12-UI IN-4										
	UI IN-5	HRV-1			FEC 2611	MS/TP	1	12	UI IN-5		EN-3	UPPER LVL, MECH RM	M601	3-12-UI IN-5										
	UI IN-6	HRV-1			FEC 2611	MS/TP	1	12	UI IN-6		EN-3	UPPER LVL, MECH RM	M601	3-12-UI IN-6										
	BI IN-7	HRV-1	HRV1-S	Heat Recovery Status	FEC 2611	MS/TP	1	12	BI IN-7	IN7, ICOM7	EN-3	UPPER LVL, MECH RM	M601	3-12-BI IN-7	2/22	OUT, COM	Current Relay	Motor Lead		Motor Lead	See wiring detail	Motor Status (Contact)	F301	
	BI IN-8	HRV-1	TIMER-S	Timer-Override Status	FEC 2611	MS/TP	1	12	BI IN-8	IN8, ICOM8	EN-3	UPPER LVL, MECH RM	M601	3-12-BI IN-8						2/22	See wiring detail	Dry Contact	F301	
	BO OUT-1	HRV-1	HRV1-C	Heat Recovery Command	FEC 2611	MS/TP	1	12	BO OUT-1	OUT1, 24V COM	EN-3	UPPER LVL, MECH RM	M601	3-12-BO OUT-1	2/22	COIL-,COIL+	Relay	COM, NO		2/14	See wiring detail	Starter (w/o Safeties) (Sw Hi, EXT)	F1015	
	BO OUT-2	HRV-1	OAD-C	OA Damper Command	FEC 2611	MS/TP	1	12	BO OUT-2	OUT2, 24V COM	EN-3	UPPER LVL, MECH RM	M601	3-12-BO OUT-2	2/22	COIL+,COIL-	Relay	COM,NO		2/22	RED, BLK	M62xx-BGx-x (On-Off) (Sw Hi, EXT Source)	F578	
	BO OUT-3	HRV-1			FEC 2611	MS/TP	1	12	BO OUT-3		EN-3	UPPER LVL, MECH RM	M601	3-12-BO OUT-3										
	CO OUT-4	HRV-1			FEC 2611	MS/TP	1	12	CO OUT-4		EN-3	UPPER LVL, MECH RM	M601	3-12-CO OUT-4										
	CO OUT-5	HRV-1			FEC 2611	MS/TP	1	12	CO OUT-5		EN-3	UPPER LVL, MECH RM	M601	3-12-CO OUT-5										
	CO OUT-6	HRV-1			FEC 2611	MS/TP	1	12	CO OUT-6		EN-3	UPPER LVL, MECH RM	M601	3-12-CO OUT-6										
	CO OUT-7	HRV-1			FEC 2611	MS/TP	1	12	CO OUT-7		EN-3	UPPER LVL, MECH RM	M601	3-12-CO OUT-7										
	AO OUT-8	HRV-1	PH-O	Preheat Output	FEC 2611	MS/TP	1	12	AO OUT-8	OUT8, OCOM8,24VAC, COM	EN-3	UPPER LVL, MECH RM	M601	3-12-AO OUT-8						2/22 / 2/18	GRY, BLK/BLK, RED	M62xx-GGx-x (Vdc) (Ext Source)	F267	
	AO OUT-9	HRV-1	RH-O	Reheat Output	FEC 2611	MS/TP	1	12	AO OUT-9	OUT9, OCOM9,24VAC, COM	EN-3	UPPER LVL, MECH RM	M601	3-12-AO OUT-9						2/22 / 2/18	GRY, BLK/BLK, RED	M62xx-GGx-x (Vdc) (Ext Source)	F267	

DETAIL F301 BINARY INPUT (DRY CONTACT)

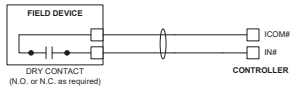

DETAIL F131 TEMPERATURE SENSOR INPUT

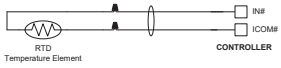

DETAIL F365 BINARY INPUT from M92xx-xxx-x, and VA92xx-xxx-x

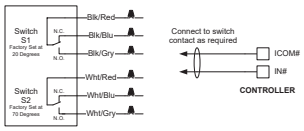

DETAIL F578 ON-OFF CONTROL to M92xx-BGx-x and VA92xx-BGx-x (Switch High, EXT Sourced)

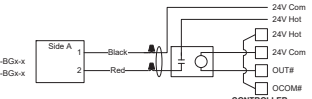

SET TRIAC JUMPER TO EXTERNALLY SOURCED (EXT) FOR ASSOCIATED BINARY OUTPUT(S).

DETAIL F267 0-10VDC OUTPUT to M92xx-GGx and HGx or VA92xx-GGx and HGx

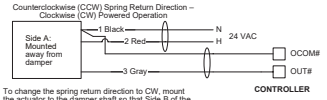

To change the spring return direction to CW, mount the actuator to the damper shaft so that Side B of the actuator is away from the damper. With power applied, the actuator now drives CCW from the 0° position, and spring returns CW.

NOTE:

(1) FIELD TO VERIFY EXACT LOCATION TO INSTALL PANEL.

IN CONSIDERATION OF THE RECEIPT OF THIS DOCUMENT, THE RECIPIENT AGREES NOT TO REPRODUCE, COPY, USE OR TRANSMIT THIS DOCUMENT AND/OR THE INFORMATION THEREIN CONTAINED, IN WHOLE OR IN PART, OR TO SUFFER SUCH ACTION BY OTHERS, FOR ANY PURPOSE, EXCEPT WITH THE ADVANCE WRITTEN PERMISSION OF JOHNSON CONTROLS, INC. AND FURTHER AGREES TO SURRENDER SAME TO JOHNSON CONTROLS, INC. UPON DEMAND.

COPYRIGHT JOHNSON CONTROLS, INC. 2018

Drawing Title
HRV-1 Hardware Schedule & Wiring Details

Project Title
Iqualuit Waste Water Treatment Plant Upgrades

Rev.	Rev. Date	Rev. By	Rev. Description
1	07/23/2018	SH	Submittal

Account Executive	Project Owner	System Designer	Drawn By	Drawing Date	Approved By	Approval Date
G. D. Montigny	Philippe Cernosek	CoEE	SH	07/23/2018		

Johnson Controls

Branch Information
Johnson Controls Ltd.
1375 Rue Frank-Carrel
Ville de Québec, QC G1N 2E7
Phone: 418-681-7958

Contract Number: 8N0Y-0079

Drawing Number: 009.002

H:\8N0Y0079\Drawings\HRV-1 Hardware Schedule.vsd

BILL OF MATERIALS

Designation	Qty	Part Number	Description
Field Devices:			
R-1	1	RIBU1C	SPDT,10A,HC=10-30 VAC/DC,W/LED
T-STAT	6	T26S-18C	SPC,BLB,SP=40-90 F(5-30 C),STG=1
UH1.5-T-STAT	1	T26S-18C	SPC,BLB,SP=40-90 F(5-30 C),STG=1
(3) UH2.5-T-STAT	1	T26S-18C	SPC,BLB,SP=40-90 F(5-30 C),STG=1
Other Devices:			
HTG-VLV	1	VALVE	REFER VALVE SCHEDULE

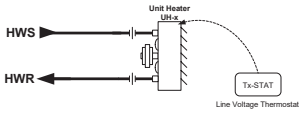

Unit Heater (New)
(TYPICAL OF 5)

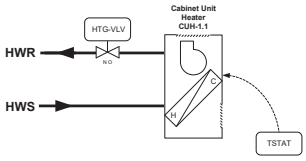

Cabinet Unit Heater
(CUH-1.1)

NEW UNIT HEATERS

SR. NO.	TAG	ROOM NUMBER	FAN (HP)	ELECTRICAL DATA V	PH	HZ	FLOW (L/S)	MECH DWG	ZONE/ CLASS
1	UH-1.4	LOWER LVL GRID F:5-6	1/20	115	1	60	260	M301	NORMAL
2	UH-1.6	LOWER LVL GRID E:5-6	1/20	115	1	60	293	M301	WET
3	UH-1.7	LOWER LVL GRID E:4-5	1/20	115	1	60	335	M301	WET
4	UH-2.2	ELEC RM (UPPER LVL)	1/20	115	1	60	260	M302	NORMAL
5	UH-2.6	DAF TANKS (UPPER LVL, GRID E-F:5-6)	1/20	115	1	60	293	M302	WET

CUH SCHEDULE									
SR. NO.	TAG	ROOM NUMBER	FAN (HP)	ELECTRICAL DATA V	PH	HZ	FLOW (L/S)	MECH DWG	ZONE/ CLASS
1	CUH-1.1	LOWER LVL GRID D:7	1/25	115	1	60	141	M301	NORMAL

(1) EXISTING UNIT HEATERS TO BE RE-USED AND RETAGGED

SR. NO.	TAG	ROOM NUMBER	FAN (HP)	ELECTRICAL DATA V	PH	HZ	FLOW (L/S)	MECH DWG	ZONE/CLASS
1	UH-1.1	LOWER LVL GRID B:2	1/20	115	1	60	260	M301	CLASS-1, ZONE-2, CAT-1
2	UH-1.2	LOWER LVL GRID B:3	1/12	115	1	60	472	M301	CLASS-1, ZONE-2, CAT-1
(3) 3	UH-1.5	LOWER LVL GRID B:5	1/3	115	1	60	1133	M301	WET
4	UH-2.1	UPPER LVL GRID B:3	1/6	115	1	60	585	M302	CLASS-1, ZONE-2, CAT-1
5	UH-2.3	UPPER LVL GRID D:2	1/8	115	1	60	698	M302	WET
6	UH-2.4	UPPER LVL GRID F:2	1/3	115	1	60	1193	M302	WET
(3) 7	UH-2.5	UPPER LVL GRID B:5	1/8	115	1	60	585	M302	WET
8	UH-2.7	UPPER LVL GRID C:4	1/3	115	1	60	1193	M302	WET

UH WIRING DETAILS

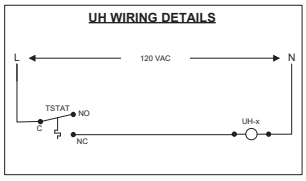

CUH WIRING DETAILS

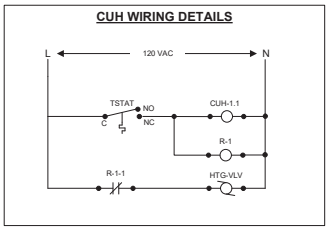

SEQUENCE OF OPERATION :

UNIT HEATERS
1. LINE VOLTAGE THERMOSTAT CYCLES BLOWER TO SATISFY THERMOSTAT SETPOINT.
2. INITIAL SETPOINT = 10 DEG C.

CABINET UNIT HEATERS
1. LINE VOLTAGE THERMOSTAT CYCLES BLOWER TO SATISFY THERMOSTAT SETPOINT.
(2) *2. HEATING VALVE IS ENABLED VIA LINE VOLTAGE THERMOSTAT.*
3. INITIAL SETPOINT = 10 DEG C.

NOTES:
(1) EXISTING UNIT HEATER WILL BE RE-USED. EXISTING THERMOSTAT ASSOCIATED WITH THESE UNIT HEATERS WILL BE RETAINED. EXISTING UNIT HEATERS WILL BE RETAGGED AS PER THE SCHEDULE PROVIDED.
(2) CUH-1.1 HEATING VALVE SEQUENCE IS PROPOSED PROVIDED IN ITALIC. FIELD TO VERIFY THE SEQUENCE BEFORE PROGRAMMING.
(3) NEW T-STAT PROVIDED FOR EXISTING UNIT HEATERS UH1.5 & UH2.5.

IN CONSIDERATION OF THE RECEIPT OF THIS DOCUMENT, THE RECIPIENT AGREES NOT TO REPRODUCE, COPY, USE OR TRANSMIT THIS DOCUMENT AND/OR THE INFORMATION THEREIN CONTAINED, IN WHOLE OR IN PART, OR TO SUFFER SUCH ACTION BY OTHERS, FOR ANY PURPOSE, EXCEPT WITH THE ADVANCE WRITTEN PERMISSION OF JOHNSON CONTROLS, INC. AND FURTHER AGREES TO SURRENDER SAME TO JOHNSON CONTROLS, INC. UPON DEMAND.

COPYRIGHT JOHNSON CONTROLS, INC. 2018

Drawing Title
UH Flow Diagram

Project Title
Iqualuit Waste Water Treatment Plant Upgrades

Rev. No.	Rev. Date	By	Description
1	07/23/2018	SH	Submittal

Account Executive	Project Owner	Drawn Designer	Drawn By	Drawing Date	Approved By	Approval Date
G. D. Montigny	Philippe Cemosek	CoEE	SH	07/23/2018		

Johnson Controls

Branch Information
Johnson Controls Ltd.
1375 Rue Frank-Carrel
Ville de Québec, QC G1N 2E7
Phone: 418-681-7958

Contract Number **8N0Y-0079**

Drawing Number **010.001**

H:\8N0Y0079\Drawings\UH Flow Diagram.vsd

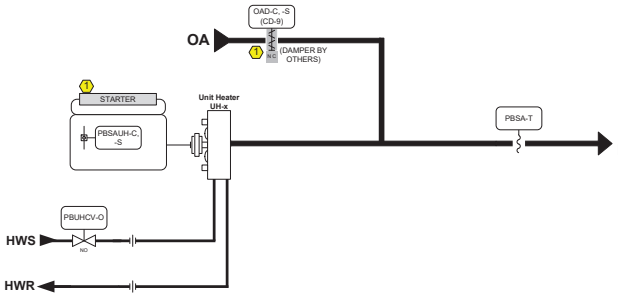

Unit Heater UH-2.8 (New)

BILL OF MATERIALS

Designation	Qty	Part Number	Description
Field Devices:			
OAD-C, -S	1	M9220-BGC-3	20NM,SR,ACT,24V ON/OFF,2 AUX SW
PBSA-T	1	TE-6328P-1	SENSOR,T-PT-EQV,20FT AVG,1K
PBSAUH-C, -S	1	CSDSC-C50100L1	CURR SW SELF CAL CLMP
R-x	3	RIB24P	DPDT,20A,HC=24 VAC/DC,W/LED
Panel Devices:			
UH2.8-CTRL	1	MS-FEC2611-0	FEC2611-0,FEC17
Other Devices:			
PBUHCV-O	1	VALVE	REFER VALVE SCHEDULE

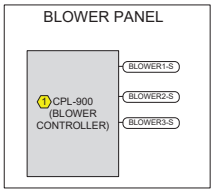

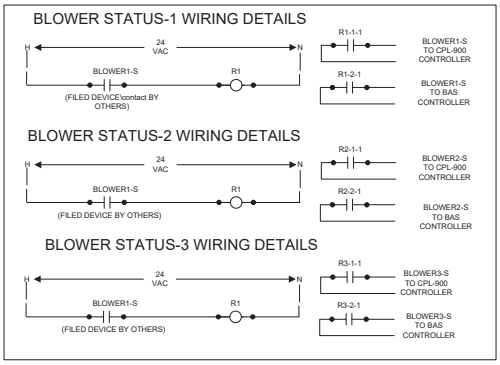

SEQUENCE OF OPERATION :

UNIT HEATER:
UNIT HEATER UH-2.8 PROVIDES TEMPERING OF ADDITIONAL MAKE-UP FOR PROCESS BLOWERS SERVING TO PRIMARY FILTERS AND PROCESS AREATION. IN ADDITION TO UNIT HEATER SYSTEM INCLUDES AN OUTDOOR AIR 2 POSITION NORMALLY CLOSE DAMPER, 2 WAY MODULATING HEATING CONTROL VALVE AND AN AVERAGING SUPPLY AIR TEMPERATURE SENSOR.

CONTROL DAMPER:
CONTROL DAMPER WILL BE INTERLOCKED WITH ALL THE PROCESS BLOWERS. CONTROL DAMPER WILL OPEN FULLY IF ANY PROCESS BLOWER IS OPERATING.

UNIT HEATER ENABLE:
UNIT HEATER WILL BE ENABLED BY BAS WHEN ANY PROCESS BLOWER IS OPERATING AND OUTDOOR AIR TEMPERATURE IS EQUAL TO OR BELOW -15 DEG C (ADJUSTABLE).
BAS WILL MODULATE THE 2-WAY CONTROL VALVE TO MAINTAIN PROCESS BLOWER SUPPLY AIR TEMPERATURE (PBSA-T) SETPOINT. INITIAL SETPOINT IS SET TO -15 DEG C (ADJUSTABLE).

ALARM:
IN THE EVENT SUPPLY AIR TEMPERATURE IS LESS THAN -20 DEG C AS SENSED BY THE PBSA-T, AN ALARM WILL BE GENERATED AT OWS.

NEW UNIT HEATER

UH SCHEDULE											
SR. NO.	TAG	ROOM NUMBER	FAN (HP)	CAPACITY (KW)	ELECTRICAL DATA V	PH	HZ	FLOW (L/S)	ZONE/ CLASS	MAPPED TO	REFER DWG.
1	UH-2.8	UPPER LEVEL, GRID F:5	1/6	20.1	120	1	60	0.31	NORMAL	CF-2 (EN-6)	007.005

NOTE:

1 DEVICES IN GRAY ARE PROVIDED BY OTHERS.

IN CONSIDERATION OF THE RECEIPT OF THIS DOCUMENT, THE RECIPIENT AGREES NOT TO REPRODUCE, COPY, USE OR TRANSMIT THIS DOCUMENT AND/OR THE INFORMATION THEREIN CONTAINED, IN WHOLE OR IN PART, OR TO SUFFER SUCH ACTION BY OTHERS, FOR ANY PURPOSE, EXCEPT WITH THE ADVANCE WRITTEN PERMISSION OF JOHNSON CONTROLS, INC. AND FURTHER AGREES TO SURRENDER SAME TO JOHNSON CONTROLS, INC. UPON DEMAND.

COPYRIGHT JOHNSON CONTROLS, INC. 2018

Drawing Title
UH W/Process Blower Flow Diagram

Project Title
Iqualuit Waste Water Treatment Plant Upgrades

Mark	No.	Date	By	Description
	2	10/11/2018	SH	Updated as per CCN001
	1	07/23/2018	SH	Submittal

Account Executive	Project Owner	Drawn By	Drawing Date	Approved By	Approval Date
G. D. Montigny	Philippe Cemosek	CoEE	SH 07/23/2018		

Johnson Controls

Branch Information
Johnson Controls Ltd.
1375 Rue Frank-Carrel
Ville de Québec, QC G1N 2E7
Phone: 418-681-7958

Contract Number **8N0Y-0079**

Drawing Number **010.002**

H:\8N0Y\00792\Drawings\sh1H With Process Blower Flow Diagram.vsd

Electrician/Fitter	Point Information				Controller Information						Panel Information					Intermediate Device			Field Device				
Tag	Point Type	System Name	Object Name	Expanded ID	Controller Details	Trunk Type	Trunk Nbr	Trunk Addr.	Cable Destination Bay/Terminal	Termination Out	Panel	Panel Location	Reference Drawing	Cable Number	Wiring /Tubing	Termination In	Device	Termination Out	Wiring /Tubing	Termination In	Device	Ref Detail Shape	Comment
		UH-2.8			FEC 2611						EN-6	Elec Room	M402										
		UH-2.8			FEC 2611	MS/TP	1	19			EN-6	Elec Room	M402										Power to Controller BacNet FC Bus
	UI IN-1	UH-2.8	PBSA-T	Process Blower Supply Air Temp	FEC 2611	MS/TP	1	19	UI IN-1	IN1, ICOM1	EN-6	Elec Room	M402	6-19-UI IN-1					2/22	2-Wire	TE	F131	
	UI IN-2	UH-2.8	PBSAUH-S	Process Blower Unit Heater Status	FEC 2611	MS/TP	1	19	UI IN-2	IN2, ICOM2	EN-6	Elec Room	M402	6-19-UI IN-2	2/22	OUT, COM	Current Relay	Motor Lead	Motor Lead	See wiring detail	Motor Status (Contact)	F301	
	UI IN-3	UH-2.8	BLOWER1-S	Process Blower-1 Status	FEC 2611	MS/TP	1	19	UI IN-3	IN3, ICOM3	EN-6	Elec Room	M402	6-19-UI IN-3					2/22	See wiring detail	Dry Contact	F301	
	UI IN-4	UH-2.8	OAD-S	OA Damper Status	FEC 2611	MS/TP	1	19	UI IN-4	IN4, ICOM4	EN-6	Elec Room	M402	6-19-UI IN-4					2/22	See wiring detail	M92xx-xxx-x EndSwitch	F365	
	UI IN-5	UH-2.8			FEC 2611	MS/TP	1	19	UI IN-5		EN-6	Elec Room	M402	6-19-UI IN-5									
	UI IN-6	UH-2.8			FEC 2611	MS/TP	1	19	UI IN-6		EN-6	Elec Room	M402	6-19-UI IN-6									
	BI IN-7	UH-2.8	BLOWER2-S	Process Blower-1 Status	FEC 2611	MS/TP	1	19	BI IN-7	IN7, ICOM7	EN-6	Elec Room	M402	6-19-BI IN-7					2/22	See wiring detail	Dry Contact	F301	
	BI IN-8	UH-2.8	BLOWER3-S	Process Blower-1 Status	FEC 2611	MS/TP	1	19	BI IN-8	IN8, ICOM8	EN-6	Elec Room	M402	6-19-BI IN-8					2/22	See wiring detail	Dry Contact	F301	
	BO OUT-1	UH-2.8	PBSAUH-C	Process Blower Unit Heater Command	FEC 2611	MS/TP	1	19	BO OUT-1	OUT1, 24V COM	EN-6	Elec Room	M402	6-19-BO OUT-1	2/22	COIL (Wh/Yel,Wh/Blue)	RIB Relay	COM, NC (Yel, Blue)	2/14	See wiring detail	Starter (NC) (Sw Hi, EXT Source)	F502	
	BO OUT-2	UH-2.8	OAD-C	OA Damper Command	FEC 2611	MS/TP	1	19	BO OUT-2	OUT2, 24V COM	EN-6	Elec Room	M402	6-19-BO OUT-2	2/22	COIL+, COIL-	Relay	COM,NO	2/22	RED, BLK	M92xx-BGx-x (On-Off) (Sw Hi, EXT Source)	F578	
	BO OUT-3	UH-2.8			FEC 2611	MS/TP	1	19	BO OUT-3		EN-6	Elec Room	M402	6-19-BO OUT-3									
	CO OUT-4	UH-2.8			FEC 2611	MS/TP	1	19	CO OUT-4		EN-6	Elec Room	M402	6-19-CO OUT-4									
	CO OUT-5	UH-2.8			FEC 2611	MS/TP	1	19	CO OUT-5		EN-6	Elec Room	M402	6-19-CO OUT-5									
	CO OUT-6	UH-2.8			FEC 2611	MS/TP	1	19	CO OUT-6		EN-6	Elec Room	M402	6-19-CO OUT-6									
	CO OUT-7	UH-2.8			FEC 2611	MS/TP	1	19	CO OUT-7		EN-6	Elec Room	M402	6-19-CO OUT-7									
	AO OUT-8	UH-2.8	PBUHCV-O	Process Blower Unit Heater Control Valve	FEC 2611	MS/TP	1	19	AO OUT-8	OUT8, OCOM8,24VAC, COM	EN-6	Elec Room	M402	6-19-AO OUT-8					2/22 / 2'18	GRY, BLK/BLK, RED	M92xx-GGx-x (Vdc) (Ext Source)	F267	
	AO OUT-9	UH-2.8			FEC 2611	MS/TP	1	19	AO OUT-9		EN-6	Elec Room	M402	6-19-AO OUT-9									

DETAIL F131 TEMPERATURE SENSOR INPUT

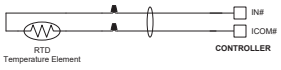

DETAIL F301 BINARY INPUT (DRY CONTACT)

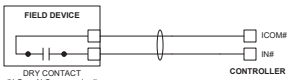

DETAIL F365 BINARY INPUT from M92xx-xxx-x, and VA92xx-xxx-x

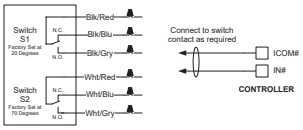

DETAIL F578 ON-OFF CONTROL to M92xx-BGx-x and VA92xx-BGx-x (Switch High, EXT Sourced)

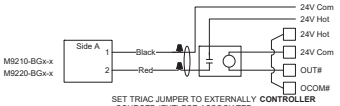

DETAIL F502 24 VAC BINARY OUTPUT to LOW CURRENT DRAW DEVICE (Switch High, EXT Sourced)

(Use when current draw of the Field Device is less than 50 mA)

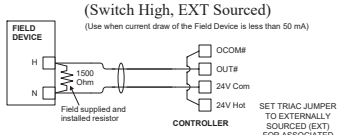

DETAIL F267 0-10VDC OUTPUT to M92xx-GGx and HGx or VA92xx-GGx and HGx

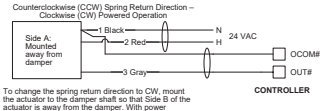

NOTE:

1. FIELD TO VERIFY EXACT LOCATION TO INSTALL PANEL.

IN CONSIDERATION OF THE RECEIPT OF THIS DOCUMENT, THE RECIPIENT AGREES NOT TO REPRODUCE, COPY, USE OR TRANSMIT THIS DOCUMENT AND/OR THE INFORMATION THEREIN CONTAINED, IN WHOLE OR IN PART, OR TO SUFFER SUCH ACTION BY OTHERS, FOR ANY PURPOSE, EXCEPT WITH THE ADVANCE WRITTEN PERMISSION OF JOHNSON CONTROLS, INC. AND FURTHER AGREES TO SURRENDER SAME TO JOHNSON CONTROLS, INC. UPON DEMAND.

COPYRIGHT JOHNSON CONTROLS, INC. 2018

Drawing Title
UH With Process Blowers Hardware Schedule & Wiring Details

2	10/11/2018	SH	Updated as per CCN001
1	07/23/2018	SH	Submittal

Account Executive	Project Owner	System Designer	Drawn By	Drawing Date	Approved By	Approval Date
G. D. Montigny	Philippe Cernosek	CoEE	SH	07/23/2018		

Project Title
Iqualuit Waste Water Treatment Plant Upgrades

Johnson Controls

Branch Information
Johnson Controls Ltd.
1375 Rue Frank-Carrel
Ville de Québec, QC G1N 2E7
Phone: 418-681-7958

Contract Number
8N0Y-0079

Drawing Number
010.003

\\10.109.192.72\Field Engineering\NA\CANADA\HOUSTON\FY-18\PF\M8N0Y0079\Drawings\UH With Process Blowers Hardware Schedule & Wiring Details.vsd

OA-T

LOCATE SENSOR ON NORTH SIDE WALL AWAY FROM DIRECT SUNLIGHT (MAPPED IN HWS CONTROLLER) (SHARED GLOBALLY)

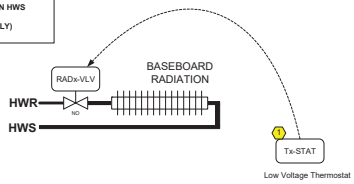

PERIMETER HEATING
TYPICAL OF 3

(LOCATED IN EXISTING ELECTRIC ROOM, LAB & WATER SERVICE ENTRY ROOM)

RADIATOR VALVE WIRING DETAILS

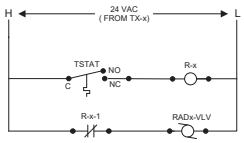

UH SCHEDULE

SR. NO.	TAG	ROOM NUMBER	CAPACITY (KW)	MECH DWG	ZONE/CLASS	T-STAT
1 1	E-WF-1	UPPER LEVEL B:2-3	1.423	M302	DRY ROOMS	EXISTING W/TSTAT & NEW VALVE
2 1	E-WF-1	UPPER LEVEL B:3	1.423	M302	DRY ROOMS	EXISTING W/TSTAT & NEW VALVE
3	WF-1	LOWER LEVEL GRID D-E:6 (WATER SERVICE ENTRY RM)	670	M301	WET	NEW RAD W/NEW T-STAT & VALVE

(FOR EXISTING RADIATORS E-WF-2 (QTY-2), EXISTING T-STAT TO REMAIN AS IS)

BILL OF MATERIALS

	Designation	Qty	Part Number	Description
	Field Devices:			
	R-x	3	RIBU1C	SPDT,10A,HC=10-30 VAC/DC,W/LED
	TX-x	3	Y65T31-0	TRANSFORMER UL CLASS 2
1	Tx-STAT	1	T26S-18C	SPC,BLB,SP=40-90 F(5-30 C),STG=1
	Other Devices:			
2	HTVENT-VLV	1	VALVE	REFER VALVE SCHEDULE
	RADx-VLV	3	VALVE	REFER VALVE SCHEDULE

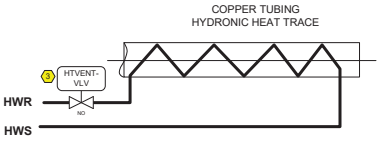

TANK VENT HEAT TRACE

LOCATION: UPPER LEVEL, GRID C/2

SEQUENCE OF OPERATION:

RADIATION PANEL:

1. LOW VOLTAGE THERMOSTAT CYCLES NORMALLY OPEN TWO POSITION ZONE VALVE TO SATISFY THERMOSTAT SETPOINT.
2. RADIATION VALVE WILL BE NORMALLY OPEN WHEN THERE IS NO POWER.
3. VALVE WILL CLOSE ONCE THERE IS POWER.
4. VALVE WILL OPEN WHEN THERE IS POWER AND A CALL FOR HEAT.
2. INITIAL SETPOINT = 20 DEG C.

TWAS TANK HEAT VENT TRACE :

1. NORMALLY OPEN TWO-POSITION ZONE VALVE CYCLES OPENS WHEN OUTDOOR AIR TEMP LESS THAN 1 DEG C. AN ANTI SHORT CYCLE TIME DELAY IS TO BE PROVIDED.

NOTE:

1. BASEBOARD RADIATORS E-WF-1 (QTY-2) ARE EXISTING. EXISTING THERMOSTAT WILL REMAIN AS IS. NEW CONTROLS AND CONTROL VALVE IS PROVIDED BY JCI. FIELD TO VERIFY.
2. 24VAC POWER SUPPLY TO THE RADIATOR VALVE IS PROVIDED BY TRANSFORMER TX-x.
3. CONTROL POINT "HTVENT-VLV" IS MAPPED INTO HEX 3.1 CONTROL PANEL (EN-5). REFER DEG. 004.002. PROVIDED IS 2-POSITION CONTROL SIGNAL. FIELD TO VERIFY.

IN CONSIDERATION OF THE RECEIPT OF THIS DOCUMENT, THE RECIPIENT AGREES NOT TO REPRODUCE, COPY, USE OR TRANSMIT THIS DOCUMENT AND/OR THE INFORMATION THEREIN CONTAINED, IN WHOLE OR IN PART, OR TO SUFFER SUCH ACTION BY OTHERS, FOR ANY PURPOSE, EXCEPT WITH THE ADVANCE WRITTEN PERMISSION OF JOHNSON CONTROLS, INC. AND FURTHER AGREES TO SURRENDER SAME TO JOHNSON CONTROLS, INC. UPON DEMAND.

COPYRIGHT JOHNSON CONTROLS, INC. 2018

Drawing Title: **Perimeter Heating Flow Diagram**

Project Title: **Iqualuit Waste Water Treatment Plant Upgrades**

Rev.	Rev. Date	Rev. By	Rev. Description
1	07/23/2018	SH	Submittal

Account Executive	Project Owner	System Designer	Drawn By	Drawing Date	Approved By	Approval Date
G. D. Montigny	Philippe Cernosek	CoEE	SH	07/23/2018		

Johnson Controls

Branch Information
Johnson Controls Ltd.
1375 Rue Frank-Carrel
Ville de Québec, QC G1N 2E7
Phone: 418-681-7958

Contract Number: **8N0Y-0079**

Drawing Number: **010.004**

H:\8N0Y0079\Drawings\Perimeter Heating Flow Diagram.vsd

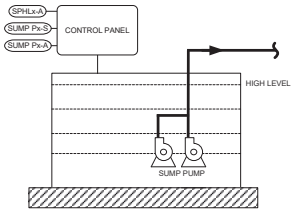

SUMP PUMP

SUMP PUMP SCHEDULE

S.NO	SYSTEM NAME	FLOOR	MAPPED IN	REFER DWG	POINTS MAPPED	MECH DWG	ZONE/CLASS
1	P2.1/P2.2	LOWER LEVEL	AHU3-CP	006.007	SPHL2.1 & 2.2-A, SUMP2.1-A, SUMP2.2-A, SUMP2.1-S, SUMP2.2-S	M201	AREA B-2, CLASS-1
2	P2.3/P2.4	LOWER LEVEL	WSRS-CP	003.002	SPHL2.3 & 2.4-A, SUMP2.3-A, SUMP2.4-A, SUMP2.3-S, SUMP2.4-S	M201	AREA C-6, WET
3	P2.5/P2.6	LOWER LEVEL	WSRS-CP	003.002	SPHL2.5 & 2.6-A, SUMP2.5-A, SUMP2.6-A, SUMP2.5-S, SUMP2.6-S	M201	AREA E-4, WET

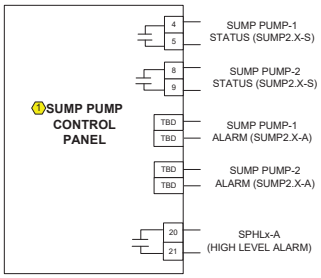

SEQUENCE OF OPERATION:

1. EXISTING SUMP PUMPS P-2.1, P-2.2, P-2.3 AND P-2.4 ARE EXISTING SUBMERSIBLE PUMPS THAT WILL BE REPLACED AS PART OF THIS CONTRACT. THE EXISTING PUMP CONTROL PANEL FOR EACH PAIR OF PUMPS WILL ALSO BE REPLACED.
2. SUMP PUMPS P-2.5 AND P-2.6 ARE NEW SUBMERSIBLE SUMP PUMPS NEW CONTROL PANELS ARE TO BE PROVIDED FOR EACH PAIR OF SUMP PUMPS.
3. SUMP PUMPS OPERATE AS DUTY/STANDBY. DUTY PUMP SWITCHES AFTER EACH RUN CYCLE.
4. SUMP PUMP CONTROLS INCLUDES FOUR (4) LEVEL SWITCHES.
   1. DUTY PUMP ON WHEN PUMP START SUMP LEVEL SWITCH ENABLED.
   2. DUTY PUMP OFF WHEN PUMP STOP SUMP LEVEL SWITCH ENABLED.
   3. STANDBY PUMP ON WHEN 3RD SUMP LEVEL SWITCH (HIGH LEVEL) ENABLED SO BOTH PUMPS ON. BOTH PUMP OFF WHEN PUMP STOP SUMP LEVEL SWITCH ENABLED.
4. ALARM HIGH LEVEL WHEN SUMP HIGH LEVEL SWITCH ENABLED.
5. INDICATE SUMP PUMP STATUS AT OWS.

NOTES:

1. FILED TO VERIFY EXACT TERMINAL NUMBERS BEFORE WIRING.

IN CONSIDERATION OF THE RECEIPT OF THIS DOCUMENT, THE RECIPIENT AGREES NOT TO REPRODUCE, COPY, USE OR TRANSMIT THIS DOCUMENT AND/OR THE INFORMATION THEREIN CONTAINED, IN WHOLE OR IN PART, OR TO SUFFER SUCH ACTION BY OTHERS, FOR ANY PURPOSE, EXCEPT WITH THE ADVANCE WRITTEN PERMISSION OF JOHNSON CONTROLS, INC. AND FURTHER AGREES TO SURRENDER SAME TO JOHNSON CONTROLS, INC. UPON DEMAND.

COPYRIGHT JOHNSON CONTROLS, INC. 2018

Drawing Title: **Sump Pump Flow Diagram**

Project Title: **Iqualuit Waste Water Treatment Plant Upgrades**

Rev. No.	Date	Rev. By	Rev. Description
1	07/23/2018	SH	Submittal

Account Executive	Project Owner	Concern Designer	Drawn By	Drawing Date	Approved By	Approval Date
G. D. Montigny	Philippe Cemosek	CoEE	SH	07/23/2018		

Johnson Controls

Branch Information
Johnson Controls Ltd.
1375 Rue Frank-Carrel
Ville de Québec, QC G1N 2E7
Phone: 418-681-7958

Contract Number: **8N0Y-0079**

Drawing Number: **011.001**

BILL OF MATERIALS

Designation	Qty	Part Number	Description
Field Devices:			
HEATSYS-FAIL	3	RIBU1C	SPDT,10A,HC=10-30 VAC/DC,W/LED
ZN-T, -SP	3	NS-BTB7003-0	3X4.5.T.F/C.D.AJ.TB ADRS

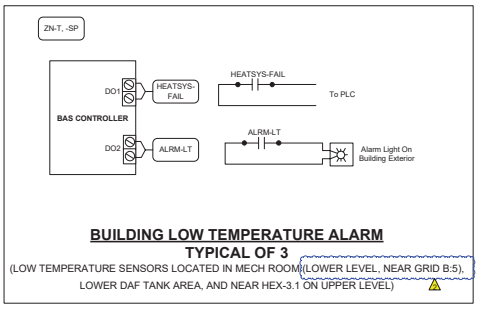

BUILDING LOW TEMPERATURE ALARM
TYPICAL OF 3

(LOW TEMPERATURE SENSORS LOCATED IN MECH ROOM (LOWER LEVEL, NEAR GRID B:5), LOWER DAF TANK AREA, AND NEAR HEX-3.1 ON UPPER LEVEL) 1

BUILDING LOW TEMPERATURE ALARM					
S.NO	TAG	SENSOR LOATION	MAPPED IN	REFER DWG	MECH DWG
1	BLDG-LT1	MECH ROOM-LOWER LEVEL (B:5)	CF1-CP	007.002	M601
2	BLDG-LT2	1 LOWER DAF TANK AREA	WSRS-CP	003.002	M301
3	BLDG-LT3	NEAR HEX-3.1	HEX3.1-CP	004.003	M302

SEQUENCE OF OPERATION:

1. IN EVENT OF LOW BUILDING TEMPERATURE AS SENSED BY TEMPERATURE SENSOR AND 15 MINUTE TIME DELAY, SIGNAL PROCESS CONTROL PLC.
2. INITIAL SETPOINT = 5 DEG C
3. LOW TEMPERATURE SENSORS LOCATED IN MECH ROOM, LOWER DAF TANK AREA, AND NEAR HEX-3.1 ON UPPER LEVEL.
2 4. ZONE TEMPERATURE WILL BE MONIOTRED ON BAS. *WHEN LOW TEMPERATURE CONDITIONS ARE SATISFIED, BAS WILL GENERATE HEAT SYSTEM FAIL ALARM. BAS WILL ALSO PROVIDE ALRM-LT SIGNAL TO ENABLE THE LIGHT ON THE BUILDING EXTERIOR.*

NOTES:

1 JCI WILL ONLY PROVIDE ALRM-LT (DO) SIGNAL ON LOW TEMPERATURE CONDITION TO ENABLE THE LIGHT ON BUILDING EXTERIOR. WIRING REQUIRED TO ENABLE THE LIGHT ON IS PROVIDED BY ELECTRIC CONTRACTOR. ELECTRIC CONTRACTOR TO PROVIDE REQUIRED RELAYS FOR CONTROL SYSTEM TO ENABLE LIGHT.

2 SEQUENCE PROVIDED IN ITALIC IS PROPOSED BY JCI BASED ON SCHEMATIC PRESENT ON MECHANICAL DRAWING M601. FIELD TO VERIFY THE SEQUENCE PROPOSED BEFORE SOFTWARE PROGRAMMING.

IN CONSIDERATION OF THE RECEIPT OF THIS DOCUMENT, THE RECIPIENT AGREES NOT TO REPRODUCE, COPY, USE OR TRANSMIT THIS DOCUMENT AND/OR THE INFORMATION THEREIN CONTAINED, IN WHOLE OR IN PART, OR TO SUFFER SUCH ACTION BY OTHERS, FOR ANY PURPOSE, EXCEPT WITH THE ADVANCE WRITTEN PERMISSION OF JOHNSON CONTROLS, INC. AND FURTHER AGREES TO SURRENDER SAME TO JOHNSON CONTROLS, INC. UPON DEMAND.

COPYRIGHT JOHNSON CONTROLS, INC. 2018

Drawing Title
Building Low Temperature Alarm Flow Diagram

Project Title
Iqualuit Waste Water Treatment Plant Upgrades

Rev. No.	Date	Drawn By	Description
2	10/11/2018	SH	Re-Submittal
1	07/23/2018	SH	Submittal

Account Executive	Project Owner	Content Designer	Drawn By	Drawing Date	Approved By	Approval Date
G. D. Montigny	Philippe Cemosek	CoEE	SH	07/23/2018		

Johnson Controls

Branch Information
Johnson Controls Ltd.
1375 Rue Frank-Carrel
Ville de Québec, QC G1N 2E7
Phone: 418-681-7958

Contract Number **8N0Y-0079**

Drawing Number **011.002**

1/0.100.192.72\Field Engineering\NA\CANADA-HOUSTON\FY-18\PRM\8N0Y0079\Drawings\Building Low Temperature Alarm Flow Diagram.vsd

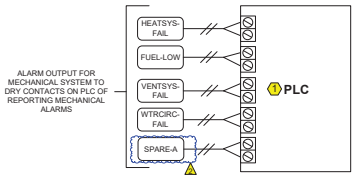

MECHANICAL ALARMS TO PLC

ZONE CLASSIFICATION: WET AREA

BILL OF MATERIALS

Designation	Qty	Part Number	Description
Field Devices:			
BLDG-LT	1	RIBU1C	SPDT,10A,HC=10-30 VAC/DC,W/LED
FUEL-LOW	1	RIBU1C	SPDT,10A,HC=10-30 VAC/DC,W/LED
HEATSYS-FAIL	1	RIBU1C	SPDT,10A,HC=10-30 VAC/DC,W/LED
VENTSYS-FAIL	1	RIBU1C	SPDT,10A,HC=10-30 VAC/DC,W/LED
WTRCIRC-FAIL	1	RIBU1C	SPDT,10A,HC=10-30 VAC/DC,W/LED
2 Panel Devices:			
MISC-CTRL	1	MS-FEC1611-1	MS-FEC1611-1 FINAL

SEQUENCE OF OPERATION:

BELOW ALARM OUTPUTS FOR MECHANICAL SYSTEM ARE PROVIDED TO DRY CONTACTS ON PLC OF REPORTING MECHANICAL ALARMS:
- HEATING SYSTEM FAIL ALARM (BUILDING LOW TEMPERATURE ALARM TO ENABLE HEATING SYSTEM FAIL ALARM).
- FUEL OIL SYSTEM LOW
- VENTILATION SYSTEM FAIL
- WATER SERVICE RECIRC FAIL
- SPARE ALARM 1

NOTES:

1. FIELD TO VERIFY THE TERMINAL NUMBERS AND OTHER DETAILS FOR PLC.
2. REFER PANEL DETAILS ON DWG 012.007.

IN CONSIDERATION OF THE RECEIPT OF THIS DOCUMENT, THE RECIPIENT AGREES NOT TO REPRODUCE, COPY, USE OR TRANSMIT THIS DOCUMENT AND/OR THE INFORMATION THEREIN CONTAINED, IN WHOLE OR IN PART, OR TO SUFFER SUCH ACTION BY OTHERS, FOR ANY PURPOSE, EXCEPT WITH THE ADVANCE WRITTEN PERMISSION OF JOHNSON CONTROLS, INC. AND FURTHER AGREES TO SURRENDER SAME TO JOHNSON CONTROLS, INC. UPON DEMAND.

COPYRIGHT JOHNSON CONTROLS, INC. 2018

Drawing Title: **Miscellaneous System Flow Diagram**

Project Title: **Iqualuit Waste Water Treatment Plant Upgrades**

Rev. No.	Date	Rev. By	Description
2	10/11/2018	SH	Re-Submittal
1	07/23/2018	SH	Submittal

Account Executive	Project Owner	Concern Designer	Drawn By	Drawing Date	Approved By	Approval Date
G. D. Montigny	Philippe Cemosek	CoEE	SH	07/23/2018		

Johnson Controls

Branch Information
Johnson Controls Ltd.
1375 Rue Frank-Carrel
Ville de Québec, QC G1N 2E7
Phone: 418-681-7958

Contract Number: **8N0Y-0079**

Drawing Number: **011.003**

Electrician/Fitter		Point Information			Controller Information						Panel Information				Intermediate Device				Field Device				
Tag	Point Type	System Name	Object Name	Expanded ID	Controller Details	Trunk Type	Trunk Nbr	Trunk Addr.	Cable Destination Bay/Terminal	Termination Out	Panel	Panel Location	Reference Drawing	Cable Number	Wiring /Tubing	Termination In	Device	Termination Out	Wiring /Tubing	Termination In	Device	Ref Detail Shape	Comment
		MISC			FEC 1611						EN-7	TBD	M601										Power to Controller
		MISC			FEC 1611	MS/TP	1	20			EN-7	TBD	M601										BacNet FC Bus
	UI IN-1	MISC			FEC 1611	MS/TP	1	20	UI IN-1		EN-7	TBD	M601	7-20-UI IN-1									
	UI IN-2	MISC			FEC 1611	MS/TP	1	20	UI IN-2		EN-7	TBD	M601	7-20-UI IN-2									
	BI IN-3	MISC			FEC 1611	MS/TP	1	20	BI IN-3		EN-7	TBD	M601	7-20-BI IN-3									
	BO OUT-1	MISC	HEATSYS-FAIL	Heating System Fail Alarm	FEC 1611	MS/TP	1	20	BO OUT-1	OUT1, 24V COM	EN-7	TBD	M601	7-20-BO OUT-1					2/18	See wiring detail	24VAC OUT (Sw Hi, EXT Source)	F501	
	BO OUT-2	MISC	FUEL-LOW	Fuel Oil System Low Alarm	FEC 1611	MS/TP	1	20	BO OUT-2	OUT2, 24V COM	EN-7	TBD	M601	7-20-BO OUT-2					2/18	See wiring detail	24VAC OUT (Sw Hi, EXT Source)	F501	
	BO OUT-3	MISC	VENTSYS-FAIL	Ventilation System Fail Alarm	FEC 1611	MS/TP	1	20	BO OUT-3	OUT3, 24V COM	EN-7	TBD	M601	7-20-BO OUT-3					2/18	See wiring detail	24VAC OUT (Sw Hi, EXT Source)	F501	
	CO OUT-4	MISC	WTRCIRC-FAIL	Water Service Re-Circulation Fail	FEC 1611	MS/TP	1	20	CO OUT-4	OUT4, 24V COM	EN-7	TBD	M601	7-20-CO OUT-4					2/18	See wiring detail	24VAC OUT (Sw Hi, EXT Source)	F901	
	CO OUT-5	MISC	SPARE-A	Spare Alarm	FEC 1611	MS/TP	1	20	CO OUT-5	OUT5, 24V COM	EN-7	TBD	M601	7-20-CO OUT-5					2/18	See wiring detail	24VAC OUT (Sw Hi, EXT Source)	F901	
	CO OUT-6	MISC			FEC 1611	MS/TP	1	20	CO OUT-6		EN-7	TBD	M601	7-20-CO OUT-6									
	CO OUT-7	MISC			FEC 1611	MS/TP	1	20	CO OUT-7		EN-7	TBD	M601	7-20-CO OUT-7									

DETAIL F501 24 VAC BINARY OUTPUT (Switch High, EXT Sourced)

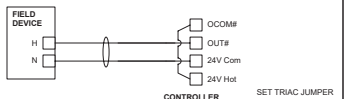

SET TRIAC JUMPER TO EXTERNALLY SOURCED (EXT) FOR ASSOCIATED BINARY OUTPUT(S).

DETAIL F901 24 VAC TRIAC OUTPUT (Switch High, EXT Sourced)

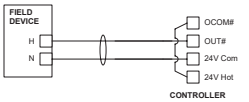

NOTE:

1. FIELD TO VERIFY EXACT LOCATION TO INSTALL PANEL. PANEL CAN BE LOCATED IN THE SAME ROOM WHERE PLC IS LOCATED.

IN CONSIDERATION OF THE RECEIPT OF THIS DOCUMENT, THE RECIPIENT AGREES NOT TO REPRODUCE, COPY, USE OR TRANSMIT THIS DOCUMENT AND/OR THE INFORMATION THEREIN CONTAINED, IN WHOLE OR IN PART, OR TO SUFFER SUCH ACTION BY OTHERS, FOR ANY PURPOSE, EXCEPT WITH THE ADVANCE WRITTEN PERMISSION OF JOHNSON CONTROLS, INC. AND FURTHER AGREES TO SURRENDER SAME TO JOHNSON CONTROLS, INC. UPON DEMAND.

COPYRIGHT JOHNSON CONTROLS, INC. 2018

Drawing Title
Miscellaneous System Hardware Schedule & Wiring Details

Rev.	Date	By	Description
2	10/11/2018	SH	Re-Submittal
1	07/23/2018	SH	Submittal

Project Title
Iqualuit Waste Water Treatment Plant Upgrades

Account Executive	Project Owner	System Designer	Drawn By	Drawing Date	Approved By	Approval Date
G. D. Montigny	Philippe Cernosek	CoEE	SH	07/23/2018		

Johnson Controls

Branch Information
Johnson Controls Ltd.
1375 Rue Frank-Carrel
Ville de Québec, QC G1N 2E7
Phone: 418-681-7958

Contract Number: **8N0Y-0079**

Drawing Number: **011.004**

\\10.109.192.72\Field Engineering\NA\CANADA-HOUSTON\FY-18\PFM\8N0Y0079\Drawings\Miscellaneous System Hardware Schedule & Wiring Details.vsd

PANEL EN-1 LAYOUT

LOWER LEVEL-MECH ROOM

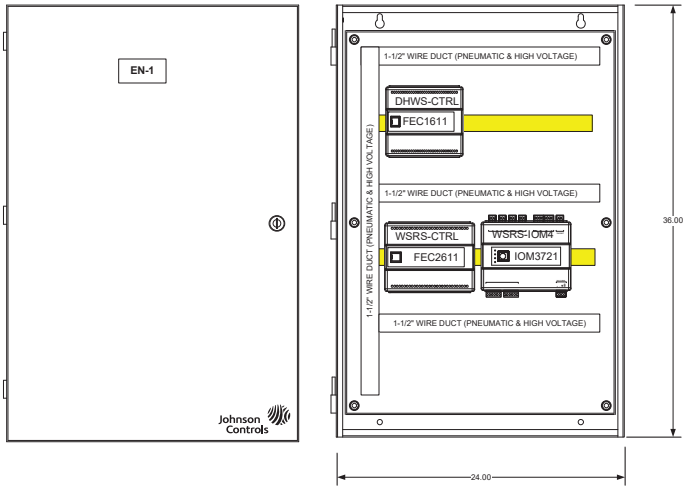

PANEL EN-1, LOWER LEVEL-MECH ROOM				
SR NO	DEVICE	PART	SYSTEM ASSOCIATED	REFER DWG
1	WSRS-CTRL	MS-FEC2611-0	WATER SUPPLY & RECIRCULATION	003.001
2	WSRS-IOM4	MS-IOM3721-0	WATER SUPPLY & RECIRCULATION	003.001
3	DHWS-CTRL	MS-FEC1611-1	DOM HOT WATER SYSTEM	004.001

TRANSFORMER VA REQUIRED					
SR NO	DEVICE	PART	QTY	VA REQUIRED	TOTAL VA RATING (x QTY)
1	DHWS-CTRL	MS-FEC1611-1	1	14	14
2	WSRS-CTRL	MS-FEC2611-0	1	14	14
3	WSRS-IOM4	MS-IOM3721-0	1	14	14
4	HX3.2V-O, -POS	VLV ACTUATOR	1	6	6
5	HX3.1V-O	VLV ACTUATOR	1	6	6
6	CURRENT SW	CSDSC-C50100L1	5	0.5	2.5
TOTAL VA REQUIRED FOR PANEL EN-1+ (20% SPARE)					67.8

NOTE:

IN CONSIDERATION OF THE RECEIPT OF THIS DOCUMENT, THE RECIPIENT AGREES NOT TO REPRODUCE, COPY, USE OR TRANSMIT THIS DOCUMENT AND/OR THE INFORMATION THEREIN CONTAINED, IN WHOLE OR IN PART, OR TO SUFFER SUCH ACTION BY OTHERS, FOR ANY PURPOSE, EXCEPT WITH THE ADVANCE WRITTEN PERMISSION OF JOHNSON CONTROLS, INC. AND FURTHER AGREES TO SURRENDER SAME TO JOHNSON CONTROLS, INC. UPON DEMAND.

COPYRIGHT JOHNSON CONTROLS, INC. 2018

Drawing Title: **Panel EN-1 Layout**

Rev. Num.	ECN	Date	Rev. By	Rev. Description
1		08/21/2018	SH	Submittal

Project Title: **Iqualuit Waste Water Treatment Plant Upgrades**

Account Executive	Project Owner	System Designer	Drawn By	Drawing Date	Approved By	Approval Date
G. D. Montigny	Philippe Cernosek	CoEE	SH	08/21/2018		

Johnson Controls

Branch Information
Johnson Controls Ltd.
1375 Rue Frank-Carrel
Ville de Québec, QC G1N 2E7
Phone: 418-681-7958

Contract Number: **8N0Y-0079**

Drawing Number: **012.001**

H:\8N0Y0079\Drawings\Panel EN-1 Layout.vsd

PANEL EN-2 LAYOUT

LOWER LEVEL-GENERATOR ROOM

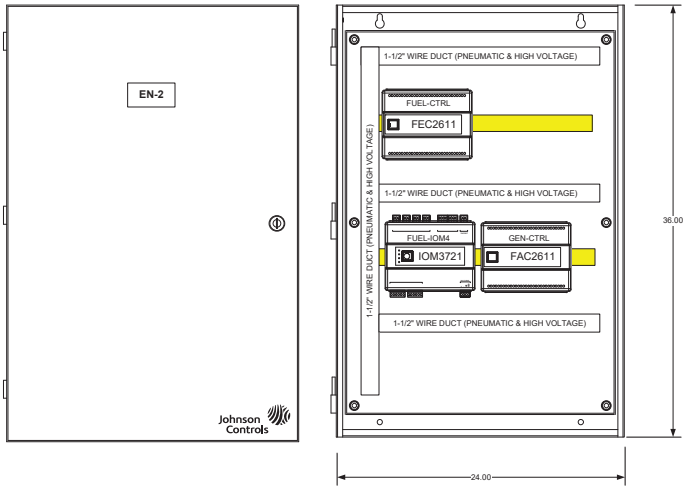

PANEL EN-2, LOWER LEVEL-GENERATOR ROOM				
SR NO	DEVICE	PART	SYSTEM ASSOCIATED	REFER DWG
1	FUEL-CTRL	MS-FEC2611-0	FUEL OIL SYSTEM	005.001
2	FUEL-IOM4	MS-IOM3721-0	FUEL OIL SYSTEM	005.001
3	GEN-CTRL	MS-FAC2611-0	GENERATOR	008.001

TRANSFORMER VA REQUIRED					
SR NO	DEVICE	PART	QTY	VA REQUIRED	TOTAL VA RATING (xQTY)
1	GEN-CTRL	MS-FEC1611-1	1	14	14
2	FUEL-CTRL	MS-FEC2611-0	1	14	14
3	FUEL-IOM4	MS-IOM3721-0	1	14	14
4	TKxV-C	VLV ACTUATOR	3	10	30
5	CURRENT SW	CSDSC-C50100L1	2	0.5	1
6	RELAY	RIBU1C	1	1.104	1.104
7	CAD-C	DMPR ACTUATOR	1	24	24
8	EAD-O	DMPR ACTUATOR	1	8	8
9	RAD-O	DMPR ACTUATOR	1	8	8
10	OAD-O	DMPR ACTUATOR	1	8	8
TOTAL VA REQUIRED FOR PANEL EN-2+ (20% SPARE)					147

NOTE:

IN CONSIDERATION OF THE RECEIPT OF THIS DOCUMENT, THE RECIPIENT AGREES NOT TO REPRODUCE, COPY, USE OR TRANSMIT THIS DOCUMENT AND/OR THE INFORMATION THEREIN CONTAINED, IN WHOLE OR IN PART, OR TO SUFFER SUCH ACTION BY OTHERS, FOR ANY PURPOSE, EXCEPT WITH THE ADVANCE WRITTEN PERMISSION OF JOHNSON CONTROLS, INC. AND FURTHER AGREES TO SURRENDER SAME TO JOHNSON CONTROLS, INC. UPON DEMAND.

COPYRIGHT JOHNSON CONTROLS, INC. 2018

Drawing Title: **Panel EN-2 Layout**

Rev. Num.	ECN	Date	Rev. By	Rev. Description
1		08/21/2018	SH	Submittal

Project Title: **Iqualuit Waste Water Treatment Plant Upgrades**

Account Executive	Project Owner	System Designer	Drawn By	Drawing Date	Approved By	Approval Date
G. D. Montigny	Philippe Cernosek	CoEE	SH	08/21/2018		

Johnson Controls

Branch Information:
Johnson Controls Ltd.
1375 Rue Frank-Carrel
Ville de Québec, QC G1N 2E7
Phone: 418-681-7958

Contract Number: **8N0Y-0079**

Drawing Number: **012.002**

H:\8N0Y0079\Drawings\Panel EN-2 Layout.vsd

PANEL EN-3 LAYOUT

UPPER LEVEL-MECH ROOM

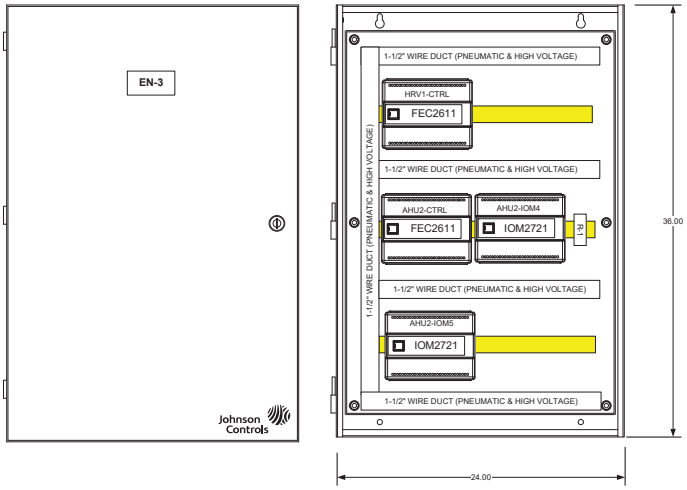

PANEL EN-3, UPPER LEVEL-MECH ROOM				
SR NO	DEVICE	PART	SYSTEM ASSOCIATED	REFER DWG
1	HRV1-CTRL	MS-FEC2611-0	HRV-1	009.001
2	AHU2-CTRL	MS-FEC2611-0	AHU-2	006.001
3	AHU2-IOM4	MS-IOM2721-0	AHU-2	006.001
4	AHU2-IOM5	MS-IOM2721-0	AHU-2	006.001

TRANSFORMER VA REQUIRED					
SR NO	DEVICE	PART	QTY	VA REQUIRED	TOTAL VA RATING (xQTY)
1	HRV1-CTRL	MS-FEC2611-0	1	14	14
2	AHU2-CTRL	MS-FEC2611-0	1	14	14
3	AHU2-IOM4	MS-IOM2721-0	1	14	14
4	AHU2-IOM5	MS-IOM2721-0	1	14	14
6	R-1 (UNIT-EN)	RH2B-ULAC24V	1	1.4	1.4
7	DA-VP	ASENN-28x14	1	0.12	0.12
8	EA-VP	ASENN-44x16	1	0.12	0.12
9	CURRENT SW	CSDSC-C50100L1	2	0.5	1
10	RELAY	RIBU1C	1	1.104	1.104
11	PH-O	VLV ACTUATOR	1	6	6
12	RH-O	VLV ACTUATOR	1	6	6
15	OAD-C	DMPR ACTUATOR	1	24	24
TOTAL VA REQUIRED FOR PANEL EN-3+ (20% SPARE)					115

NOTE:

IN CONSIDERATION OF THE RECEIPT OF THIS DOCUMENT, THE RECIPIENT AGREES NOT TO REPRODUCE, COPY, USE OR TRANSMIT THIS DOCUMENT AND/OR THE INFORMATION THEREIN CONTAINED, IN WHOLE OR IN PART, OR TO SUFFER SUCH ACTION BY OTHERS, FOR ANY PURPOSE, EXCEPT WITH THE ADVANCE WRITTEN PERMISSION OF JOHNSON CONTROLS, INC. AND FURTHER AGREES TO SURRENDER SAME TO JOHNSON CONTROLS, INC. UPON DEMAND.

COPYRIGHT JOHNSON CONTROLS, INC. 2018

Drawing Title: **Panel EN-3 Layout**

Rev. Num.	ECN	Date	Rev. By	Rev. Description
1		08/21/2018	SH	Submittal

Project Title: **Iqualuit Waste Water Treatment Plant Upgrades**

Account Executive	Project Owner	System Designer	Drawn By	Drawing Date	Approved By	Approval Date
G. D. Montigny	Philippe Cernosek	CoEE	SH	08/21/2018		

Johnson Controls

Branch Information
Johnson Controls Ltd.
1375 Rue Frank-Carrel
Ville de Québec, QC G1N 2E7
Phone: 418-681-7958

Contract Number: **8N0Y-0079**

Drawing Number: **012.003**

H:\8N0Y0079\Drawings\Panel EN-3 Layout.vsd

PANEL EN-4 LAYOUT

LOWER LEVEL MECH ROOM

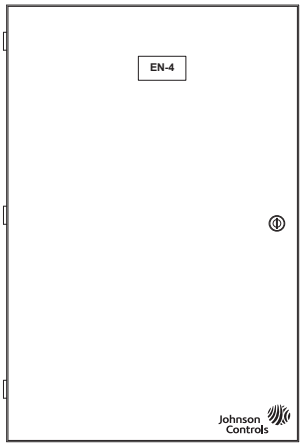

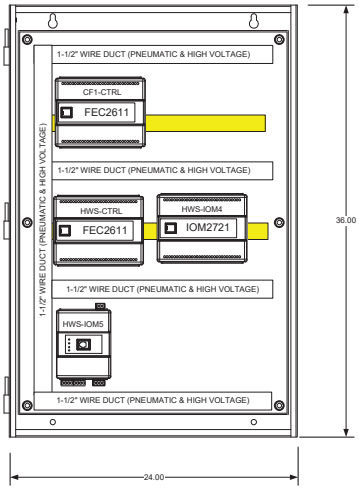

PANEL EN-4, LOWER LEVEL MECH ROOM				
SR NO	DEVICE	PART	SYSTEM ASSOCIATED	REFER DWG
1	HWS-CTRL	MS-FEC2611-0	HWS	002.001
2	HWS-IOM4	MS-IOM2721-0	HWS	002.001
3	HWS-IOM5	MS-IOM1711-0	HWS	002.001
4	CF1-CTRL	MS-FEC2611-0	CF-1	007.001

TRANSFORMER VA REQUIRED					
SR NO	DEVICE	PART	QTY	VA REQUIRED	TOTAL VA RATING (xQTY)
1	CF1-CTRL	MS-FEC2611-0	1	14	14
2	HWS-CTRL	MS-FEC2611-0	1	14	14
3	HWS-IOM4	MS-IOM2721-0	1	14	14
4	HWS-IOM5	MS-IOM1711-0	1	14	14
5	RAD-O	DMPR ACTUATOR	1	8	8
6	OAD-O	DMPR ACTUATOR	1	8	8
7	CURRENT SW	CSDSC-C50100L1	5	0.5	2.5
8	HTG-C	VLV ACTUATOR	1	24	24
9	RELAY	RIBU1C	1	1.104	1.104
TOTAL VA REQUIRED FOR PANEL EN-4+ (20% SPARE)					**120**

NOTE:

IN CONSIDERATION OF THE RECEIPT OF THIS DOCUMENT, THE RECIPIENT AGREES NOT TO REPRODUCE, COPY, USE OR TRANSMIT THIS DOCUMENT AND/OR THE INFORMATION THEREIN CONTAINED, IN WHOLE OR IN PART, OR TO SUFFER SUCH ACTION BY OTHERS, FOR ANY PURPOSE, EXCEPT WITH THE ADVANCE WRITTEN PERMISSION OF JOHNSON CONTROLS, INC. AND FURTHER AGREES TO SURRENDER SAME TO JOHNSON CONTROLS, INC. UPON DEMAND.

COPYRIGHT JOHNSON CONTROLS, INC. 2018

Drawing Title: **Panel EN-4 Layout**

Rev. No.	ECN	Date	Rev. By	Rev. Description
1		08/21/2018	SH	Submittal

Project Title: **Iqualuit Waste Water Treatment Plant Upgrades**

Account Executive	Project Owner	System Designer	Drawn By	Drawing Date	Approved By	Approval Date
G. D. Montigny	Philippe Cernosek	CoEE	SH	08/21/2018		

Johnson Controls

Branch Information:
Johnson Controls Ltd.
1375 Rue Frank-Carrel
Ville de Québec, QC G1N 2E7
Phone: 418-681-7958

Contract Number: **8N0Y-0079**

Drawing Number: **012.004**

H:\8N0Y0079\Drawings\Panel EN-4 Layout.vsd

PANEL EN-5 LAYOUT

UPPER LEVEL EXISTING HEADWORK

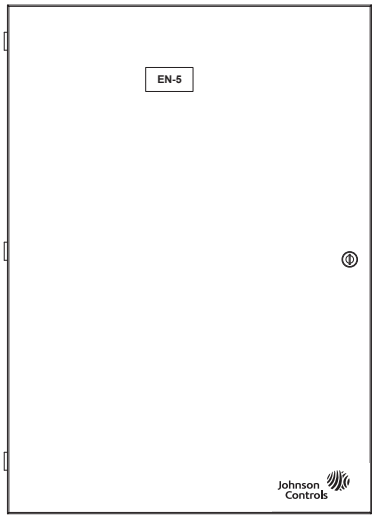

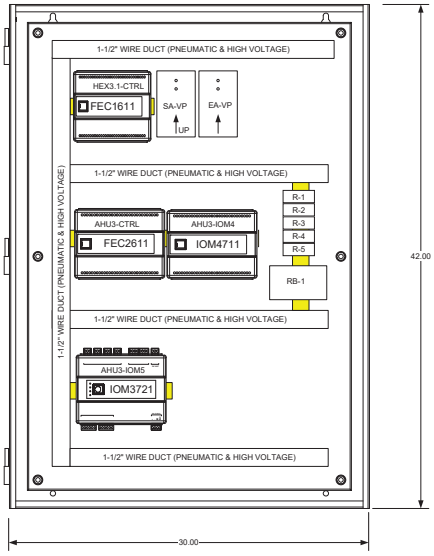

PANEL EN-5, UPPER LEVEL EXISTING HEADWORKS				
SR NO	DEVICE	PART	SYSTEM ASSOCIATED	REFER DWG
1	AHU3-CTRL	MS-FEC2611-0	AHU-3	002.001
2	AHU3-IOM4	MS-IOM4711-0	AHU-3	002.001
3	AHU3-IOM5	MS-IOM3721-0	AHU-3	002.001
4	HEX3.1-CTRL	MS-FEC1611-1	HEX-3.1	004.001
5	SA-VP	DPT260-MS2	AHU-3	002.001
6	EA-VP	DPT260-MS2	AHU-3	002.001
7	RB-1	RIBMNLB-2	AHU-3	002.001
8	R-1 (SF-HISPD)	RH2B-ULAC24V	AHU-3	002.001
9	R-2 (SF-LOSPD)	RH2B-ULAC24V	AHU-3	002.001
10	R-3 (EF-HISPD)	RH2B-ULAC24V	AHU-3	002.001
11	R-4 (EF-LOSPD)	RH2B-ULAC24V	AHU-3	002.001
12	R-5 (SDR-1)	RH2B-ULAC24V	AHU-3	002.001

TRANSFORMER VA REQUIRED					
SR NO	DEVICE	PART	QTY	VA REQUIRED	TOTAL VA RATING (xQTY)
1	HEX3.1-CTRL	MS-FEC1611-0	1	14	14
2	AHU3-CTRL	MS-FEC2611-0	1	14	14
3	AHU3-IOM4	MS-IOM4711-0	1	14	14
4	AHU3-IOM5	MS-IOM3721-0	1	14	14
5	HX3.1V-O	VLV ACTUATOR	1	6	6
6	CURRENT SW	CSDSC-C501001L1	3	0.5	1.5
7	DA-VP	ASENN-28X14	1	0.12	0.12
8	EA-VP	ASENN-44X16	1	0.12	0.12
9	RELAY	RIBU1C	2	1.104	2.208
10	RELAY BOARD	RIBU1C	1	1.87	1.87
11	RELAY	RH2B-UAC24V	5	1.4	7
12	RELAY	RIB24P	1	3.3	3.3
13	RH-O	VLV ACTUATOR	1	8	8
TOTAL VA REQUIRED FOR PANEL EN-5+ (20% SPARE)					103

NOTE:

IN CONSIDERATION OF THE RECEIPT OF THIS DOCUMENT, THE RECIPIENT AGREES NOT TO REPRODUCE, COPY, USE OR TRANSMIT THIS DOCUMENT AND/OR THE INFORMATION THEREIN CONTAINED, IN WHOLE OR IN PART, OR TO SUFFER SUCH ACTION BY OTHERS, FOR ANY PURPOSE, EXCEPT WITH THE ADVANCE WRITTEN PERMISSION OF JOHNSON CONTROLS, INC. AND FURTHER AGREES TO SURRENDER SAME TO JOHNSON CONTROLS, INC. UPON DEMAND.

COPYRIGHT JOHNSON CONTROLS, INC. 2018

Drawing Title: **Panel EN-5 Layout**

Rev. Num.	Rev.	Date	Rev. By	Description
1	1	08/21/2018	SH	Submittal

Project Title: **Iqualuit Waste Water Treatment Plant Upgrades**

Account Executive	Project Owner	System Designer	Drawn By	Drawing Date	Approved By	Approval Date
G. D. Montigny	Philippe Cernosek	CoEE	SH	08/21/2018		

Johnson Controls

Branch Information:
Johnson Controls Ltd.
1375 Rue Frank-Carrel
Ville de Québec, QC G1N 2E7
Phone: 418-681-7958

Contract Number: **8N0Y-0079**

Drawing Number: **012.005**

H:\8N0Y0079\Drawings\Panel EN-5 Layout.vsd

PANEL EN-6 LAYOUT

UPPER LEVEL, ELECTRICAL ROOM

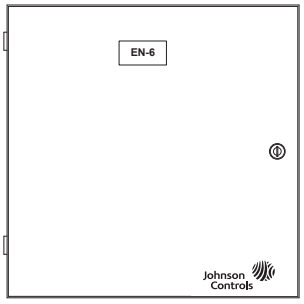

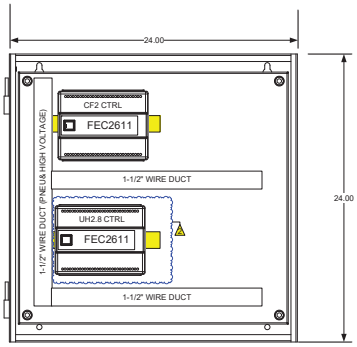

PANEL EN-6, UPPER LEVEL, ELECTRIC ROOM				
SR NO	DEVICE	PART	SYSTEM ASSOCIATED	REFER DWG
1	CF2-CTRL	MS-FEC2611-0	CF-2	007.004
2	UH2.8-CTRL	MS-FEC2611-0	UH-2.8 W/PROCESS BLOWER	10.002

TRANSFORMER VA REQUIRED					
SR NO	DEVICE	PART	QTY	VA REQUIRED	TOTAL VA RATING (xQTY)
1	CONTROLLER	MS-FEC2611-0	2	14	28
2	RELAD-O	DMPR ACTUATOR	1	8	8
3	CURRENT SW	CSDSC-C50100L1	1	0.5	0.5
4	RAD-O	DMPR ACTUATOR	1	8	8
5	OAD-O	DMPR ACTUATOR	1	8	8
5	OAD-C	DMPR ACTUATOR	1	24.6	24.6
5	PBUHCV-O	VLV ACTUATOR	1	6	6
5	RELAY	RIBU1C	3	1.104	3.312
	TOTAL VA REQUIRED FOR PANEL EN-6+ (20% SPARE)				**104**

NOTE:

IN CONSIDERATION OF THE RECEIPT OF THIS DOCUMENT, THE RECIPIENT AGREES NOT TO REPRODUCE, COPY, USE OR TRANSMIT THIS DOCUMENT AND/OR THE INFORMATION THEREIN CONTAINED, IN WHOLE OR IN PART, OR TO SUFFER SUCH ACTION BY OTHERS, FOR ANY PURPOSE, EXCEPT WITH THE ADVANCE WRITTEN PERMISSION OF JOHNSON CONTROLS, INC. AND FURTHER AGREES TO SURRENDER SAME TO JOHNSON CONTROLS, INC. UPON DEMAND.

COPYRIGHT JOHNSON CONTROLS, INC. 2018

Drawing Title
Panel EN-6 Layout

Rev. No.	EDN	Date	Rev. By	Rev. Description
2		10/11/2018	SH	Re-Submittal
1		08/21/2018	SH	Submittal

Project Title
Iqualuit Waste Water Treatment Plant Upgrades

Account Executive	Project Owner	System Designer	Drawn By	Drawing Date	Approved By	Approval Date
G. D. Montigny	Philippe Cernosek	CoEE	SH	08/21/2018		

Johnson Controls

Branch Information:
Johnson Controls Ltd.
1375 Rue Frank-Carrel
Ville de Québec, QC G1N 2E7
Phone: 418-681-7958

Contract Number: **8N0Y-0079**

Drawing Number: **012.006**

H:\8N0Y0079\Drawings\Panel EN-6 Layout.vsd

PANEL EN-7 LAYOUT

UPPER LEVEL, TBD

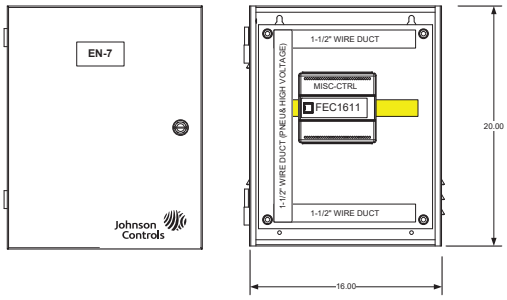

PANEL EN-6, UPPER LEVEL, TBD				
SR NO	DEVICE	PART	SYSTEM ASSOCIATED	REFER DWG
1	MISC-CTRL	MS-FEC1611-1	MISC PANEL	011.003

TRANSFORMER VA REQUIRED					
SR NO	DEVICE	PART	QTY	VA REQUIRED	TOTAL VA RATING (xQTY)
1	MISC-CTRL	MS-FEC1611-1	1	14	14
2	RELAY	RIBU1C	5	1.104	5.52
TOTAL VA REQUIRED FOR PANEL EN-7+ (20% SPARE)					23

NOTE:

IN CONSIDERATION OF THE RECEIPT OF THIS DOCUMENT, THE RECIPIENT AGREES NOT TO REPRODUCE, COPY, USE OR TRANSMIT THIS DOCUMENT AND/OR THE INFORMATION THEREIN CONTAINED, IN WHOLE OR IN PART, OR TO SUFFER SUCH ACTION BY OTHERS, FOR ANY PURPOSE, EXCEPT WITH THE ADVANCE WRITTEN PERMISSION OF JOHNSON CONTROLS, INC. AND FURTHER AGREES TO SURRENDER SAME TO JOHNSON CONTROLS, INC. UPON DEMAND.

COPYRIGHT JOHNSON CONTROLS, INC. 2018

Drawing Title
Panel EN-7 Layout

Rev. No.	EDN	Date	Rev. By	Rev. Description
1		08/21/2018	SH	Submittal

Account Executive	Project Owner	System Designer	Drawn By	Drawing Date	Approved By	Approval Date
G. D. Montigny	Philippe Cernosek	CoEE	SH	08/21/2018		

Project Title
Iqualuit Waste Water Treatment Plant Upgrades

Johnson Controls

Branch Information
Johnson Controls Ltd.
1375 Rue Frank-Carrel
Ville de Québec, QC G1N 2E7
Phone: 418-681-7958

Contract Number
8N0Y-0079

Drawing Number
012.007

H:\8N0Y0079\Drawings\Panel EN-7 Layout.vsd

Project Name: Iqualuit Waste Water Treatment Plant Upgrades
Project Number: 8N0Y-0079

Valve Schedule

Tag						Valve Information															Actuator Information		
Item	System	Service	Qty.	JCI DWG	Ref. Dwg.	Code Number	Valve Family	Configuration	Fail Position	Inlet Pipe Size (in)	Valve Size (in)	Medium	Flow (gpm or lbs/hr)	Design Delta P (psi)	Valve Delta P (psi)	Design Coefficient (Cv)	Valve Coefficient (Cv)	Valve Close Off (psi)	Trim Material	Connection	Code Number	Actuator Control	Comments
1	AHU-2	RH-O	1	006.001	M202	VG1245DP+928GGA	Ball Valve	2-Way	Valve Open	2	1-1/4	Water	38.2	5.0	4.2	17.1	18.7	200.0	Stainless Steel	Threaded	VA9208-GGA-2	0-10VDC PROP	
2	AHU-2	RH-O	1	006.001	M202	VG1245CL+923GGA	Ball Valve	2-Way	Valve Open	2	1	Water	11.1	5.0	2.2	5.0	7.4	200.0	Stainless Steel	Threaded	VA9203-GGA-2Z	0-10VDC PROP	
3	AHU-3	RH-O	1	006.006	M301	VG1845DP+948GGA	Ball Valve	3-Way	Normal Position	2	1-1/4	Water	26.9	5.0	2.1	12.1	18.7	200.0	Stainless Steel	Threaded	VA9208-GGA-2	0-10VDC PROP	NOTE-1
4	CF-1	HTG-O	1	007.001	M500	VG1245AD+923GGA	Ball Valve	2-Way	Valve Open	3/4	1/2	Water	1.6	3.0	1.8	0.9	1.2	200.0	Stainless Steel	Threaded	VA9203-GGA-2Z	0-10VDC PROP	NOTE-1
5	HRV-1	PH-O	1	009.001	M601	VG1245AD+923GGA	Ball Valve	2-Way	Valve Open	3/4	1/2	Water	0.6	3.0	0.3	0.4	1.2	200.0	Stainless Steel	Threaded	VA9203-GGA-2Z	0-10VDC PROP	NOTE-3
6	HRV-1	RH-O	1	009.001	M601	VG1245AD+923GGA	Ball Valve	2-Way	Valve Open	3/4	1/2	Water	0.5	3.0	0.2	0.3	1.2	200.0	Stainless Steel	Threaded	VA9203-GGA-2Z	0-10VDC PROP	NOTE-3
7	CUH-1.1	HTG-VLV	1	010.001	M602	VG1245CL+923BUB	Ball Valve	2-Way	Valve Open	3/4	1	Water	1.6	3.0	0.0	0.9	7.4	200.0	Stainless Steel	Threaded	VA9203-BUB-2	120VAC On/Off	
8	UH-2.8	PBUHCV-O	1	010.002	M402	VG1245CL+923GGA	Ball Valve	2-Way	Valve Open	1	1	Water	4.9	3.0	0.4	2.8	7.4	200.0	Stainless Steel	Threaded	VA9203-GGA-2Z	0-10VDC PROP	NOTE-1
9	RAD-1 (E-WF-1)	RAD1-VLV	1	010.002	M602	VG1245CL+923BGB	Ball Valve	2-Way	Valve Open	3/4	1	Water		3.0	0.0	0.0	7.4	200.0	Stainless Steel	Threaded	VA9203-BGB-2	24VAC On/Off	NOTE-2, 6
10	RAD-2 (E-WF-1)	RAD2-VLV	1	010.002	M602	VG1245CL+923BGB	Ball Valve	2-Way	Valve Open	3/4	1	Water		3.0	0.0	0.0	7.4	200.0	Stainless Steel	Threaded	VA9203-BGB-2	24VAC On/Off	NOTE-2, 6
11	RAD-3 (WF-1)	RAD3-VLV	1	010.002	M201	VG1245CL+923BGB	Ball Valve	2-Way	Valve Open	3/4	1	Water		3.0	0.0	0.0	7.4	200.0	Stainless Steel	Threaded	VA9203-BGB-2	24VAC On/Off	NOTE-2
12	HEAT VENT	HTVENT-VLV	1	010.002	M302	VG1245CL+923BGB	Ball Valve	2-Way	Valve Open	3/4	1	Water	0.7	3.0	0.0	0.4	7.4	200.0	Stainless Steel	Threaded	VA9203-BGB-2	24VAC On/Off	NOTE-4
13	HEX3.2	HX3.2V-O	1	003.001	M602	VG1245CL+943GGA	Ball Valve	2-Way	Valve Closed	1 1/2	1	Water	11.4	5.0	2.4	5.1	7.4	200.0	Stainless Steel	Threaded	VA9203-GGA-2Z	0-10VDC PROP	NOTE-1
14	HEX3.1	HX3.1V-O	1	004.001	M602	VG1245CL+943GGA	Ball Valve	2-Way	Valve Closed	1 1/2	1	Water	13.5	5.0	3.3	6.0	7.4	200.0	Stainless Steel	Threaded	VA9203-GGA-2Z	0-10VDC PROP	NOTE-1
15	FUEL OIL	TK4.1V-C	1	005.001	M604	7321GBN99N00	Ball Valve	2-Way	Valve Closed	2	2	Oil					38.6		Stainless Steel	Threaded		24VAC On/Off	NOTE-2
16	FUEL OIL	TK4.2V-C	1	005.001	M604	7321BBN64N00	Ball Valve	2-Way	Valve Closed	1	1	Oil					13.5		Stainless Steel	Threaded		24VAC On/Off	NOTE-2
17	FUEL OIL	TK4.3V-C	1	005.001	M604	7321BBN64N00	Ball Valve	2-Way	Valve Closed	1	1	Oil					13.5		Stainless Steel	Threaded		24VAC On/Off	NOTE-2

NOTES:

1. LINE SIZE IS NOT AVAILABLE IN MECHANICAL DRAWINGS. FIELD TO VERIFY LINE SIZE. VALVE IS SELECTED BASED ON FLOW DATA. FIELD TO VERIFY VALVE SELECTION BEFORE MATERIAL ORDERING.
2. FLOW (L/S) VALUE IS NOT PROVIDED IN MECHANICAL DRAWINGS. 2-POSITION VALVE IS SELECTED BASED ON AVAILBLE LINE SIZE. FIELD TO VERIFY VALVE FLOW AND LINE SIZE DATA BEFORE ORDERING.
3. FLOW VALUES PROVIDED FOR HRV-1 VALVES PH-O AND RH-O ARE VERY SMALL. 1/2" VALVES ARE SELECTED FOR THESE APPLICATION. AUTHORITY VALUES FOR 1/2" VALVES ARE NOT COMING WITHIN THE ACCEPTABLE RANGE FOR PROPER CONTROL. FIELD TO VERIFY FLOW DATA AND VALVE SELECTION BEFORE ORDERING THE VALVES.
4. FIELD TO VERIFY SIGNAL FOR HEAT VENT VALVE (HTVENT-VLV) BEFORE MATERIAL ORDERING. PROVIDED IS 2-POSITION VALVE WITH 24VAC ON/OFF SIGNAL.
5. FLOW VALUE PROVIDED FOR HEATING COIL HC1.3 IS VERY SMALL. 1/2" VALVE IS SELECTED FOR THIS APPLICATION WHICH PROVIDES BETTER VALVE AUTHORITY FOR PROPER CONTROL. FIELD TO DETERMINE LIZE SIZE, FLOW DATA FOR THE HEATING COIL HC1.3 AND VALVE SELECTION TO BE VERIFIED BEOFRE MATERIAL ORDERING.
6. NEW CONTROL VALVE IS PROVIDED FOR RADIATORS IN UPPER LEVEL (RAD-1 & RAD-2). FIELD TO VERIFY IF NEW VALVE IS REQUIRED OR EXISTING TO BE REUSED.

Line sizes listed incorrect for majority of valves. Review M602 for lines sizes.

Revise and resubmit accordingly.

STANTEC PROJECT #: 110126045

SUBMITTAL # AD-036R

This review by Stantec is for general conformance with the design concept of Stantec's design of the:

- ☐ Architectural
- ☐ Structural
- ☑ Mechanical
- ☐ Electrical
- ☐ Other

component(s) only and does not mean that Stantec has verified or approves the shop drawing(s). The Contractor remains solely responsible for the shop drawing(s) and this review by Stantec does not relieve the Contractor of the Contractor's responsibility for errors or omissions in the shop drawing(s) or for meeting all requirements of the contract documents. This review does not mean that Stantec approves the detailed design inherent in the shop drawing, responsibility for which shall remain with the Contractor submitting same, nor does this review mean that Stantec accepts any deviation of the shop drawing(s) from the contract documents. The Contractor is responsible for confirming all dimensions and correlating them at the job site, for all construction means, methods and techniques, and for coordination of construction work of all trades, including coordination of all shop drawings.

Stantec

- ☐ REVIEWED
- ☐ REVIEWED, AS NOTED
- ☑ REVISE AND RESUBMIT
- ☐ NOT REVIEWED

This stamp applies to this page only

DATE 2018-12-21

BY Brendan Zrum, P.Eng

Code No. LIT-1927140
Issued April 2018

A70 Series Four-Wire, Two-Circuit Temperature Control Catalog Page

Description

The A70 Series Temperature Control incorporates a vapor-charged sensing element. The A70G, A70H, and A70K have a four-wire, two-circuit contact block that contains two isolated sets of contacts.

The contacts are designed so that when the main contact opens, the auxiliary contact closes.

Refer to the *A70, A72 Series Temperature Controls for Refrigeration and Heating Product Bulletin (LIT-125155)* for important product application information.

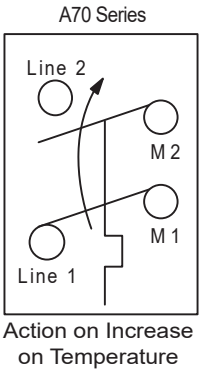

A70 Series Action Diagram



A70GA-1 Temperature Control

Features

- long-life, snap-acting contacts
- automatic or manual reset models

Applications

Typical applications include energizing an indicator light after a low temperature cutout on a ventilating system.

1.AHU-2 SA DUCT (downstraem of SF)
(THIS SENSOR USED FOR SF SAFETY INTERLOCK. STANDARD LOCATION PROVIDED FOR LT-A AFTER PREHEAT COIL)
2.CF-1, CF-2: DA DUCT

Selection Charts

A70 Series Four-Wire, Two-Circuit Temperature Control

Product Code Number	Switch Action		Range °F (°C)	Differential F° (C°)	Bulb and Capillary	Maximum Bulb Temperature °F (°C)	Range Adjuster
	Main Contacts	Auxiliary Contacts					
A70GA-1C[1]	Open low	Close low	15 to 55 (-9.4 to 12.8)	5 (2.8)	20 ft of 1/8 in. O.D. tubing	400 (204.4)	Screwdriver slot
A70GA-2C			35 to 80 (1.7 to 26.7)	3 to 30 (-16.1 to -1.1), factory set at 12 (-11.1)	3/8 in. x 3 in. 6 ft capillary	250 (121)	
A70HA-1C[1]			15 to 55 (-9.4 to 12.8)	Manual reset	20 ft of 1/8 in. O.D. tubing	400 (204.4)	
A70HA-2C			35 to 80 (1.7 to 26.7)		3/8 in. x 3 in. 6 ft capillary	250 (121)	
A70HA-14C			15 to 55 (-9.4 to 12.8)		20 ft of 1/8 in. O.D. tubing	400 (204.4)	
A70KA-1C	Open high	Close high	100 to 170 (37.8 to 76.7)		3/8 in. x 3 in. 6 ft capillary	240 (116)	

1. On these models, the low cutout stop is set and sealed at 35°F (1.6°C). It cannot be set lower. The control responds only to the lowest temperature along any 14 to 16 in. section of the entire 20 ft element.

Replacement Covers

Product Code Number	Description
CVR17A-620R	Automatic reset cover
CVR17A-621R	Manual reset cover

Technical Specifications

Electrical Ratings

Pole Number	LINE-M2 (Main)						LINE-M1 (Auxiliary)			
Motor Ratings VAC	120	208	240	277	480[1]	600[1]	120	208	240	277
AC Full Load A	16.0	9.2	8.0	—	5.0	4.8	6.0	3.4	3.0	—
AC Locked Rotor A	96.0	55.2	48.0	—	30.0	28.8	36.0	20.4	18.0	—
AC Non-Inductive A	16.0	9.2	8.0	7.2	—	—	6.0	6.0	6.0	6.0
Pilot Duty – Both Poles	125 VA, 120 to 600 VAC and 57.5 VA, 120 to 300 VDC									

1. Not compressor motor loads.

The performance specifications are nominal and conform to acceptable industry standards. For applications at conditions beyond these specifications, consult the local Johnson Controls office. Johnson Controls shall not be liable for damages resulting from misapplication or misuse of its products. © 2018 Johnson Controls.

AHU-2 SA DUCT (downstraem of SF)

CLEVELAND CONTROLS

Model AFS–460–DSS

Air Pressure Sensing Switch with Dual Snap Acting Switches & Manual Reset

Application

The **Model AFS-460–DSS** is a general purpose airflow proving switch designed for 120 VAC HVAC and Energy Management applications where dual manual reset switches with SPST contacts are needed. It may be used to sense positive, negative, or differential air pressure.

General Description & Operation

The plated housing contains a diaphragm, a calibration spring, and 2 snap-acting switches with a single manual reset button.

The sample connections located on each side of the diaphragm accept .25" (6.35 mm) OD tubing via the integral compression ferrule and nut.

An enclosure cover guards against accidental contact with the live switch terminal screws and the set point adjusting screw. The enclosure cover accepts two 0.5" (12.7 mm) conduit connections. The manual reset button is located on the top surface of the enclosure cover.

(Figure 1)

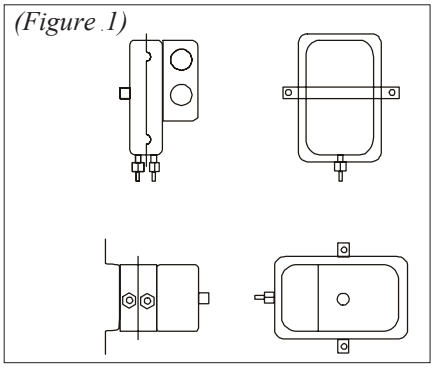

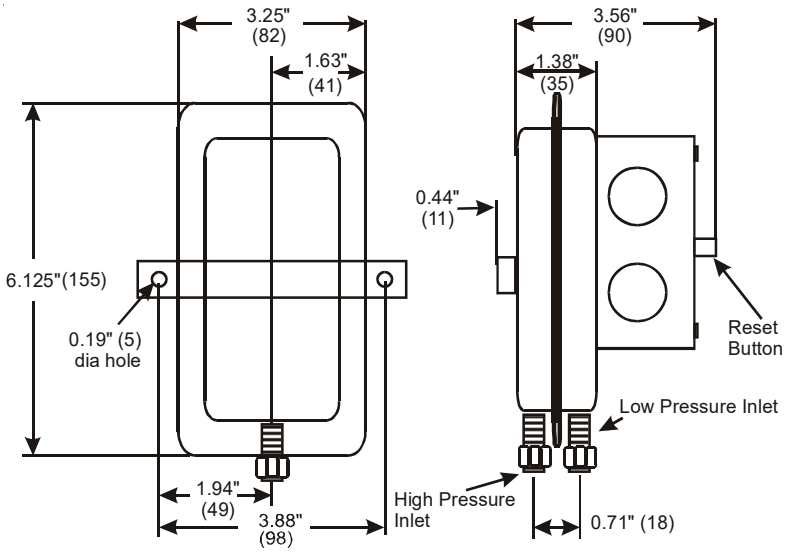

Mounting (see Figure 1)

Select a mounting location which is free from vibration. The **AFS-460–DSS** must be mounted with the diaphragm in any vertical plane in order to obtain the lowest specified operating set point. Avoid mounting with the sample line connections in the "up" position. Surface mount via the two $^{3}/_{16}$" (4.75 mm) diameter holes in the integral mounting bracket. The mounting holes are 3-$^{7}/_{8}$" (98.4 mm) apart.

Air Sampling Connection (see Figure 2)

The **AFS-460–DSS** is designed to accept firm-wall sample lines of ¼" (6.35 mm) OD tubing by means of ferrule and nut compression connections. An optional ¼" (6.35 mm) adapter, suitable for slip-on flexible tubing is available. For sample lines of up to 10 feet (3.05 metres), ¼" (6.35 mm) OD tubing is acceptable. For lines up to 20 feet (6.1 metres), use ¼" (6.35 mm) ID tubing. For lines up to 60 feet (18.3 metres), use ½" (12.7 mm) ID tubing. Locate the sampling probe a minimum of 1.5 duct diameters downstream from the air source. Install the sampling probe as close to the center of the airstream as possible. Refer to **Figure 2** to identify the high pressure inlet (H), and the low pressure inlet (L). Select one of the five application options listed below, and connect the sample lines as recommended.

(Figure 2)

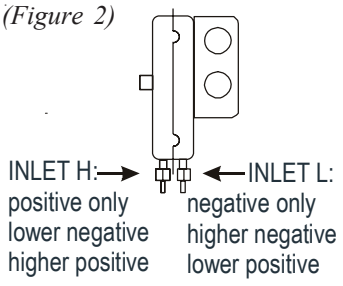

Distributed by:

Cleveland Controls
Division of UniControl Inc.
1111Brookpark Road • Cleveland OH 44109
Tel: (216) 398-0330 • Fax: (216) 398-8558
www.clevelandcontrols.com
email: saleshvac@unicontrolinc.com

POSITIVE PRESSURE ONLY: Connect the sample line to inlet H; inlet L remains open to the atmosphere.

NEGATIVE PRESSURE ONLY: Connect the sample line to inlet L; inlet H remains open to the atmosphere.

TWO NEGATIVE SAMPLES: Connect the higher negative sample to inlet L. Connect the lower negative sample to inlet H.

TWO POSITIVE SAMPLES: Connect the higher positive sample to inlet H. Connect the lower positive sample to inlet L.

ONE POSITIVE AND ONE NEGATIVE SAMPLE: Connect the positive sample to inlet H. Connect the negative sample to inlet L.

(Figure3)

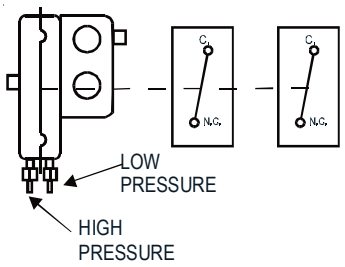

(Figure4)

To Prove Excessive or Insufficient Air Flow or Pressure:

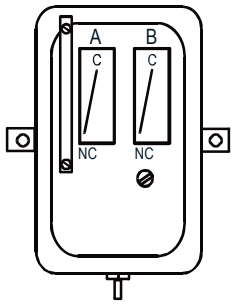

A: Lead Snap Switch (Control)
B: Lag Snap Switch (Alarm)

Pressure Conversion Table

1" H_2O = .0361 lbs./sq. in. or .0735 in. mercury
(25.4 mm w.c. or .249 kPa)
1" Hg. = .491 lbs./sq. in. or 13.6 in. water
(345 mm w.c or 3.39 kPa)
1 psi = 27.7 in. water or 2.036 in. mercury
(703 mm w.c. or 6.89 kPa)

Electrical Connections (see Figure 3)

Before pressure is applied to the diaphragm, the snap switch contacts will be in the normally closed (NC) position as shown in **Figure 3**.

The snap switches have screw top terminals with cup washers. Wire alarm and control applications as shown in **Figure 4**.

Field Adjustment: Lead & Lag Snap Switches (see Fig. 4)

The **AFS-460-DSS** Manual Reset Air Switch has a **lead** snap switch adjustment of **1.25" w.c. to 12.0" w.c**. (31.8 mm w.c. to 305 mm w.c.) The set point adjusting screw is used to adjust the set point of the **lead** snap switch **(Switch A, in Fig. 4)**. The **lag** snap switch **(Switch B, in Fig. 4)** operates after the **lead** snap switch at progressively increasing set point as indicated in **Table 1**, below. **Note**: if **simultaneous** operation of Switch A and Switch B is required, refer to **Descriptive Bulletin AFS-460-136.0x** or **AFS-460-137.0x.**

To adjust the set point of Switch A: Turn the adjusting screw counterclockwise until motion has stopped. Next, turn the adjusting screw **four** complete turns in a clockwise direction to engage the spring. From this point, the next **ten** turns will be used for the actual calibration. **Each full turn represents approximately 1.0" w.c. (25.4 mm w.c.). Please note:** To properly calibrate an air switch, a digital manometer or other measuring device should be used to confirm the actual set point.

Specifications

Model AFS-460-DSS Air Pressure Sensing Switch with Manual Reset and Dual SPST-NC Contact Arrangement

Sample Media: Air or combustion products that do not degrade silicone.
Mounting Position (in order to meet lowest operating specifications): Diaphragm in any vertical plane.
Field Adjustable Range: 1.25" ± 0.06" w.c. to 12.0" w.c. (31.8mm ±1.52mm w.c. to 305 mm w.c.)
Switch Differential: Progressive, increasing from approximately 0.06± 0.01"w.c.(1.52 ± .254mm w.c.)at minimum set point, to approximately 0.8" w.c.(20.3mm w.c.) at maximum set point.
Maximum Pressure: 0.5 psi (0.03 bar, 3.45 kPa)
Operating Temperature Range: -40 to 180F (-40.0 to 82.2C)
Life: Exceeds UL-recognized mechanical endurance test of 6,000 cycles minimum at 0.5 psi (0.03 bar, 3.45 kPa) maximum pressure each cycle and at maximum electrical load.
Electrical Rating: @ 60 Hz.
15 amp 125, 250, or 277 v AC
¼ hp 125 v AC, ½ amp 125 v DC,
¼ amp 250 v DC . 0.5 VA @ 24 v AC, 50/60 Hz.
Contact Arrangement:
2 SPST–NC(manual reset).
Electrical Connections: Screw top terminals with cup washers.
Sample Line Connections: Ferrule and nut compression type connectors will accept ¼" (6.35mm) OD rigid tubing.
Shipping Weight: 1.2 lbs. (.54 kg)
Agency Approvals & Recognitions: UL and CSA approved, CE pending.

Table 1	
Switch A	**Switch B**
Lead Switch	**Lag Switch**
Set Point	**Set Point**
1.25" - 3.00" w.c. (31.8 - 76.2 mm w.c.)	up to 5% after Switch A
3.00" - 6.00" w.c. (76.2 mm w.c. - 152.4 mm w.c.)	up to 10% after Switch A
6.00" - 9.00" w.c. (152.4 mm w.c. - 229 mm w.c.)	up to 15% after Switch A
9.00 - 12.00" w.c. (229 mmw.c. - 305 mm w.c.)	up to 35% after Switch A

Accessories

• **P/N 18311** Slip-on ¼" (6.35mm) OD Tubing Adapter, suitable for slipping on flexible plastic tubing. • Sample line probes. • Orifice plugs (pulsation dampers).

Code No. LIT-1900560
Issued March 14, 2014

AD-1251 Probe with Differential Pressure Transducer

AHU-2 DA & EA DUCT (downstraem of SF)

Description

The AD-1251 Probe with Differential Pressure Transducer (DPT) is designed to provide accurate and economical flow monitoring at all times. The probe is a differential pressure air measuring device that is designed to measure flow in duct applications. The device is intended for retrofit projects. You may install the AD-1251 in a straight duct or one duct diameter upstream from an unvaned elbow, or five duct diameters downstream from an unvaned elbow. The probes are tested per Air Movement and Control Association (AMCA) 610.93 setup.

This probe measures and reports differential pressure, effectively monitoring airflow from 400 to 5,000 Feet Per Minute (fpm) (122 to 1,524 Meters per Minute [mpm]) within ±5% accuracy. When used with the Pressure Across Measuring System (PAMS) chart accompanying the probe (or in the product literature), precise airflow is easy to determine.

The probe can be used in either a horizontal or vertical application. When ordered with an air straightener, the probe is automatically positioned in a vertical application. The 9 inch (229 mm) deep probe with air straightener allows for installation in tight space requirements where dampers are already installed, or where dampers are also required.

Refer to the *AD-1251 Probe with Differential Pressure Transducer Product Bulletin (LIT-12011473)* for important product information.

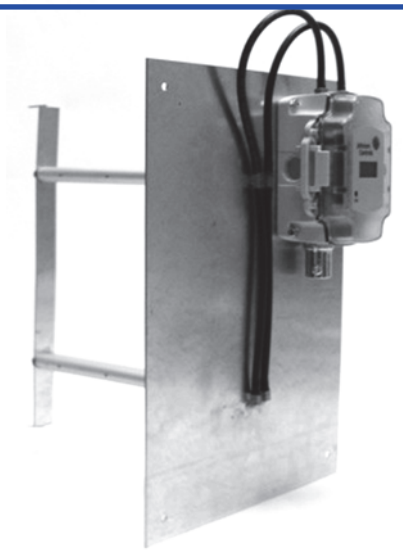

AD-1251 Probe with Differential Pressure Transducer

Features

- Slip Fit Mounting
- Horizontal or Vertical Anodized Aluminum Sensing Probes
- Factory-Piped DPT with Display

Repair Information

If the AD-1251 Probe with Differential Pressure Transducer fails to operate within its specifications, replace the unit. For a replacement AD-1251 Probe with Differential Pressure Transducer, contact the nearest Johnson Controls® representative.

All Johnson Controls AD-1251 Probes with Differential Pressure Transducers are built to order and cannot be returned due to ordering errors. All AD-1251 Probes with Differential Pressure Transducers are backed by a 3-year warranty, which covers defects in materials or workmanship. Refer to terms and conditions of sale for specifics.

Selection Charts.

Dimensions

Single and Multiple Panel Dimensions[1]	Width x Height, in. (mm)
Minimum Single Probe	6 x 6 (152 x 152)
Maximum Three Probes	60 x 42 (1,524 x 1,069)
Maximum (with Air Straightener)	Unlimited

1. Actual size is 1/4 inch less than nominal

Use the following to select the product:

1. Determine required size from drawings.
2. Select the part number required.
3. Enter width and height of duct.

www = width of duct (in inches)

hhh = height of duct (in inches)

4. Add W to the end of the code number to add the air straightener option.

Note: Actual probe size is 1/4 inch (6 mm) less than nominal. Example: ASENN-020x020W is an airflow measuring probe comprised of an aluminum air straightener, flow pickup station and DPT. Its dimensions are 20 inches (51 mm) wide x 20 inches (51 mm) high, and enclosed in a 9 inch (229 mm) long sleeve without flanges for a slip fit.

Ordering Information

Code Number	Description
ASENN-wwwxhhh	Airflow Measuring Probe with DMPR-RA001 Transducer
ASENN-wwwxhhhW	Airflow Measuring Probe with DMPR-RA001 Transducer and Air Straightener

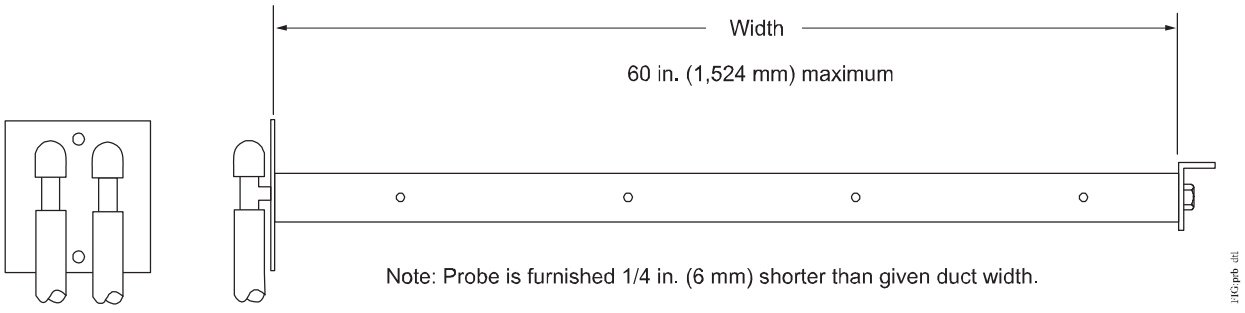

AD-1251 Probe Details

The performance specifications are nominal and conform to acceptable industry standards. For applications at conditions beyond these specifications, consult the local Johnson Controls office. Johnson Controls, Inc. shall not be liable for damages resulting from misapplication or misuse of its products. © 2014 Johnson Controls, Inc.

AD-1251 Probe with Differential Pressure Transducer (Continued)

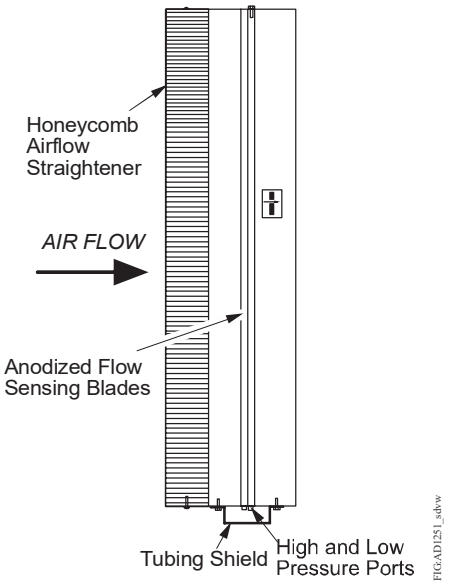

AD-1251 Probe with Air Straightener, Side View

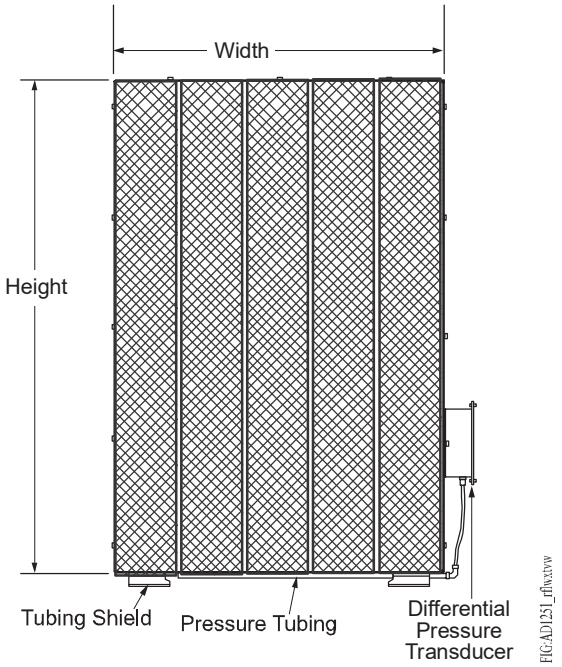

AD-1251 Probe with Air Straightener, Front View

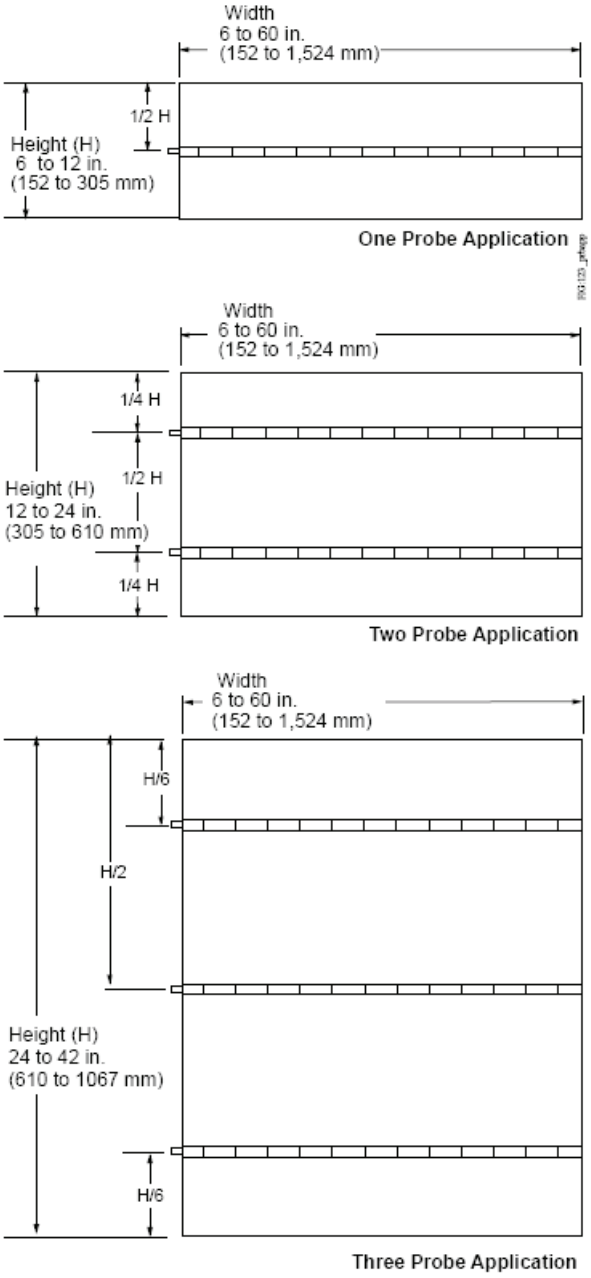

One, Two, and Three Probe Applications

The performance specifications are nominal and conform to acceptable industry standards. For applications at conditions beyond these specifications, consult the local Johnson Controls office. Johnson Controls, Inc. shall not be liable for damages resulting from misapplication or misuse of its products. © 2014 Johnson Controls, Inc.

AD-1251 Probe with Differential Pressure Transducer (Continued)

Technical Specifications

AD-1251 Probe with Differential Pressure Transducer[1]		
Velocity Requirements	Airflow Measuring Probe with DMPR-RA001 Transducer	Minimum 400 fpm (122 mpm) Maximum 5,000 fpm (1,524 mpm)
	Airflow Measuring Probe with DMPR-RA001 Transducer and Air Straightener	Minimum 300 fpm (91.44 mpm) Maximum 5,000 fpm (1,524 mpm)
Temperature Rating	Standard Operating Conditions: -22 to 140°F (-30 to 60°C) Actuator: -4 to 122°F (-20 to 50°C)	
Approximate Weight	Sensor with DPT and Side Plate: 8 lb (3.6 kg) for 60 in. (1,524 mm) long probe Sensor only: 1 lb (0.45 kg)	

1. Measuring stations are tested at an AMCA Certified Laboratory using instrumentation and procedures in accordance with AMCA Standard No. 610-93, Airflow Station Performance.

The performance specifications are nominal and conform to acceptable industry standards. For applications at conditions beyond these specifications, consult the local Johnson Controls office. Johnson Controls, Inc. shall not be liable for damages resulting from misapplication or misuse of its products. © 2014 Johnson Controls, Inc.

Code No. LIT-1901029
Issued September 2017

CSDSC Current Switch Devices

Description

The Current Switch Devices Self-Calibrating (CSDSC) Series of Current Switch Devices provide reliable verification of electrical equipment operation in a variety of applications, including fans and pumps. CSDSC current switch devices use a single-turn dial to select motor full load amps, eliminating the need for live calibration and significantly reducing installation time compared to traditional current switches.

CSDSC switches use full load amps instead of horsepower, eliminating the need for separate part numbers as a function of line voltage. CSDSC current switches are installed when the panel is de-energized. The ability to preset the sensor eliminates the need for Personal Protective Equipment (PPE) that is required by OSHA when working with a live panel.

Refer to the *CSDSC and CSDECM Current Switch Devices Product Bulletin (LIT-12012403)* for important product application information.

Features

- **Split and Solid Core Models with Mini-Sized Variants—**Fit in tight enclosures.
- **Monitored Load**—Supplies power without a power supply.
- **Optional N.O. Relay—**Adds 10 A at 125 VAC switching power with a choice of 24 or 12 V coil.
- **Polarity Insensitive Output—**Provides easier wiring.
- **Low Turn on Current—**Extends use to sub-fractional HP motors.
- **LED Indication of Switch Status—**Allows you to easily check the switch's on/off status.

CSDSC Current Switch Devices



Selection Chart

Code Number	Core Type	Minimum Turn-On Amps	Maximum Amps	LEDs	Relay Option
CSDSC-C45050Lx	Clamp	0.45 A	50 A	High, Low, Power	Yes[1]
CSDSC-C50100Lx		0.50 A	100 A		
CSDSC-C50150Lx			150 A		
CSDSCM-C01050		1.00 A	50 A	Trip	No
CSDSCM-S75050L	Solid	0.75 A	50 A	Trip	No
CSDSCM-S75005L					
CSDSCMM-S75050L					

1. See *Relay Options* for relay order code information.

Relay Options

Relay Order Code	Contact Rating	Coil	Relay Code Number (Field Accessory)	Relay Dimensions, in. (mm) (L x H x W)
1	N.O. 10 A at 125 VAC	24 VAC/VDC 15 mA	CRCSDP-NO-24	0.84 x 0.72 x 2.06 (21.3 x 18.3 x 52.3)
2			CRCSDP-NC-24	
3		12 VDC 30 mA	CRCSDP-NO-12	
4			CRCSDP-NC-12	
0	No Relay	N/A	N/A	N/A

1. HEATING WATER SYSTEM: BOILER PUMPS P1.1 & P1.2 STATUS,SECONDARY PUMPS P1.3 & P1.4 COMMAND& STATUS.
2. WATER SUPPLY & RECIRC. SYSTEM: PUMP P3.1,P3.2 & P3.4, P3.5 STATUS.
3. DOM. WATER SYSTEM: PUMP P3.3 COMMAND & STATUS
4. FUEL OIL TANK PUMP: P4.1 & P4.2 COMMAND & STATUS
5. AHU-2:HEATING COIL PUMP P1.6 COMMAND & STATUS, EA FAN & SA FAN STATUS
6. AHU-3:EA FAN & SA FAN STATUS
7. CF-1 & CF-2 SF(s) STATUS
8. HRV-1 UNIT COMMAND & STATUS

The performance specifications are nominal and conform to acceptable industry standards. For applications at conditions beyond these specifications, consult the local Johnson Controls office. Johnson Controls shall not be liable for damages resulting from misapplication or misuse of its products. © 2017 Johnson Controls.

CSDSC Current Switch Devices (Continued)

Technical Specifications

CSDSC Current Switch Devices				
	CSDSC-C45050Lx CSDSC-C50100Lx CSDSC-C50150Lx	**CSDSCM-C01050**	**CSDSC-S75050L**	**CSDSCM-S75005L CSDSCM-S75050L**
Status Output	Switch normally open			
Switch Load Capacity	1.0 at 30 VAC/VDC			
Switch Setpoint	Adjustable			
Maximum Current	50 A 100 A 150 A	50 A	50 A	5 A 50 A
Minimum Trip Setpoint Value	0.45 A 0.50 A 0.50 A	1.00 A	0.75 A	0.75 A 0.75 A
Aperture (Sensing Hole) Size; Dimensions, in. (mm)	0.75 x 0.75 (19.1 x 19.1)	0.4 x 0.32 (10.2 x 8.1 mm)	0.51 (13.0)	0.30 (7.6)
Switch LED Indication	Yes			
Current Switching Mode	Over/Under			
Sensor Supply Voltage	Induced from power conductor cable			
Status Output Wire Size	14 to 24 AWG (1.6 to 0.5 mm)			
Screw Torque	3.5 to 4.4 in·lb (0.4 to 0.5 N·m)			
Isolation Voltage	600 VAC rms (UL), 300 VAC rms (CE)			
Frequency Range	50/60 Hz			
Temperature Range	5 to 140°F (-15 to 60°C)			
Humidity Range	0 to 95% noncondensing			
Dimensions, in. (mm)	2.5 x 0.57 x 2.23 (63.5 x 14.5 x 56.6)	2.0 x 0.75 x 1.75 (50.8 x 19.1 x 44.5)	2.26 x 0.97 x 1.6 (57.4 x 24.6 x 40.6)	1.91 x 0.88 x 1.31 (48.5 x 22.4 x 33.3)
Command Relay Device Actuation Coil	20 to 30 VAC/VDC, 12 to 20 mA or 10 to 14 VAC/VDC, 25 to 35 mA (models except -0L0)	N/A	N/A	N/A
Relay Contact Rating	N.O. 10A at 125 VAC or N.C. 10A at 125 VAC	N/A	N/A	N/A
Relay LED Indication	Yes	N/A	N/A	N/A
Compliance **United States**	UL Listed, File E493157, CCN NMTR, Under UL 508, Industrial Control Equipment			
Canada	UL Listed, File E493157, CCN NMTR7, Under CAN/CSA C22.2 No. 14-M91			
CE **Europe**	CE Mark - Johnson Controls declares that this product is in compliance with the essential requirements and other relevant provisions of the EMC Directive and the Low Voltage Directive.			
Shipping Weight	0.15 lb (0.07 kg)			

The performance specifications are nominal and conform to acceptable industry standards. For applications at conditions beyond these specifications, consult the local Johnson Controls office. Johnson Controls shall not be liable for damages resulting from misapplication or misuse of its products. © 2017 Johnson Controls.

Model DPT 209 Transducer

Gauge Pressure

Range: 0 to 1 psig up to 0 to 10,000 psig

Now Available!

COMPOUND & VACUUM RANGES



Setra Systems Model 209 pressure transducers have been designed specifically for industrial applications with demanding price and performance requirements. The 209 offers exceptional reliability in typical industrial grade environments. Standard features tailor the Model 209 for applications with more extreme environmental conditions or more stringent performance needs. The Model 209 offers unparalleled performance in a configurable transducer designed specifically for the budget conscious OEM.

NOTE: Setra quality standards are based on ANSI-Z540-1. The calibration of this product is NIST traceable.

Setra's proven center mount electrode configuration is the heart of this simple, yet industrialized, design. A 17-4 PH stainless steel sensor and a rigid stainless steel electrode form the variable capacitor.

Setra 209 transducers are packaged in rugged stainless steel/Valox housings, which are small and lightweight for optimum compatibility with system designs. As a totally self - contained electronic package, the 209 stainless steel capacitance sensing element, coupled with a high level output IC-based circuit, assures excellent accuracy and long term stability.

HEATING WATER SYSTEM: SUPPLY WATER PRESSURE

Pressure Ranges

Full Scale Range	Proof Pressure	Burst Pressure
1	2	250
2	4	250
5	10	250
10	20	500
25	50	500
50	100	750
100	200	1000
200	400	2000
250	500	2000
500	1000	3000
1000	2000	5000
2000	3000	6500
3000	4500	7500
5000	7500	10,000
10,000	12,500	20,000

Applications

- Industrial OEM Equipment
- Hydraulic Systems
- Compressor Control
- HVAC/R Equipment
- Industrial Engines
- Process & Containerized Refrigeration Systems

Benefits

- Unparalleled Price/ Performance
- Rugged Design Survives Harsh Environments
- Operates Over a Wide Temperature Band
- Compatible with Wide Range of Gases & Liquids
- Operates on Low Cost Unregulated DC Power
- Suitable for High Shock & Vibration Applications
- No Seals or "O" Rings to Cause Leakage
- No Brazed Joints Susceptible to Corrosion Problems
- 3 to 5 Day Shipment for Small Quantities, Standard Configurations

ISO 9001 Certified

Visit Setra Online:
http://www.setra.com

setra

800-257-3872

159 Swanson Rd., Boxborough, MA/Telephone: 978-263-1400/Fax: 978-264-0292

Model DPT 209 Specifications

Performance Data

Accuracy RSS* (at constant temp)	±0.25% FS
Non-Linearity (BFSL)	±0.22% FS
Hysteresis	0.10% FS
Non-Repeatability	0.05% FS
Thermal Effect	
Compensated Range °F (°C)	-4 to +176 (-20 to +80)
Zero Shift %FS/100°F (%FS/50°C)	2.0 (1.8)
Span Shift %FS/100°F (%FS/50°C)	1.5 (1.3)
Warm-up Shift	±0.1% FS total
Response Time	5 milliseconds
Stability	0.5% FS/Year

*RSS of Non-Linearity, Non-Repeatability and Hysteresis.

Environmental Data

Temperature	
Operating °F (°C)	-40 to +260 (-40 to +127)
Storage °F (°C)	-40 to +260 (-40 to +127)
Vibration*	20g
Shock**	200g
Environmental Protection	Weather Resistant

*MIL-STD 202, Method 204, Cond. C

**MIL-STD 202, Method 213B, Cond. C

Electrical Data (Voltage)

Circuit	3-Wire (Com, Out, Exc)
Excitation	9 to 30 VDC
Output*	0.5 to 5.5 VDC**
Output Impedance	10 ohms

*Calibrated into a 50K ohm load, operable into a 5000 ohm load or greater.

**Zero output factory set to within ±50mV.

**Span (Full Scale) output factory set to within ±50mV.

Note: Other outputs are available with 9 to 30 VDC excitation. An output of 0.5 to 4.5 VDC output is available with 15 VDC excitation.

Electrical Data (Current)

Circuit	2-Wire
Output*	4 to 20 mA**
External Load	0 to 800 ohms

Minimum supply voltage (VDC) = 9 + 0.02 x (Resistance of receiver plus line).

Maximum supply voltage (VDC) = 28 + 0.004 x (Resistance of receiver plus line).

*Calibrated at factory with a 24 VDC loop supply voltage and a 250 ohm load.

**Zero output factory set to within ±0.16mA.

**Span (Full Scale) output factory set to within ±0.16mA.

Physical Description

Case	Stainless Steel & Valox
Sensor	17-4 PH Stainless Steel
Electrical Connection	2 ft. multi-conductor cable
Pressure Fitting*	1/4" -18 NPT external, 17-4 PH Stainless Steel
Vent	Through cable
Weight (approx.)	2.3 ounces (65 grams)

*See ordering information for other fittings available (minimum quantities apply).

Pressure Media

Liquids or gases compatible with 17-4 PH Stainless Steel*.

*Note: Hydrogen not recommended for use with 17-4 PH Stainless Steel.

Specifications subject to change without notice.

Outline Drawings

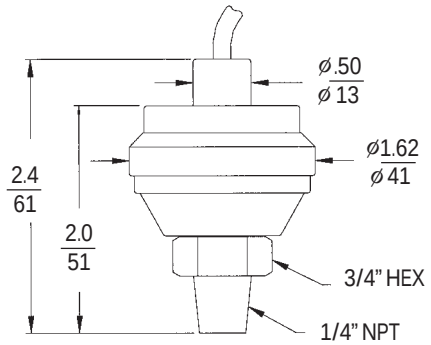

Cable Anchor

IN
MM

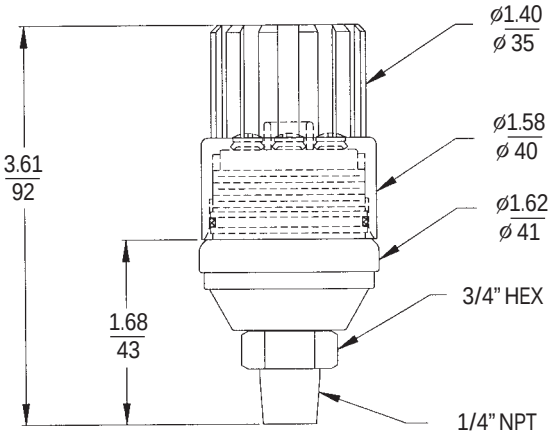

Conduit Version

SSP 209/C209CI-2pg. RevD 06/13/01

Ordering Information

Input Range PSIG	Product Codes-Cable Version 0.5 to 5.5 VDC Output	Product Codes-Cable Version 4 to 20 mA Output	Input Range PSIG	Product Codes-Conduit Version 0.5 to 5.5 VDC Output	Product Codes-Conduit Version 4 to 20 mA Output
0 to 5	DPT2090-5G	DPT2091-5G	0 to 5	DPT2090C-5G	DPT2091C-5G
0 to 10	DPT2090-10G	DPT2091-10G	0 to 10	DPT2090C-10G	DPT2091C-10G
0 to 25	DPT2090-25G	DPT2091-25G	0 to 25	DPT2090C-25G	DPT2091C-25G
0 to 50	DPT2090-50G	DPT2091-50G	0 to 50	DPT2090C-50G	DPT2091C-50G
0 to 100	DPT2090-100G	DPT2091-100G	0 to 100	DPT2090C-100G	DPT2091C-100G
0 to 250	DPT2090-250G	DPT2091-250G	0 to 250	DPT2090C-250G	DPT2091C-250G
0 to 500	DPT2090-500G	DPT2091-500G	0 to 500	DPT2090C-500G	DPT2091C-500G
0 to 1000	DPT2090-1000G	DPT2091-1000G	0 to 1000	DPT2090C-1000G	DPT2091C-1000G
Compound			Compound		
-14.7 to 30	DPT2090-30C	DPT2091-30C	-14.7 to 30	DPT2090C-30C	DPT2091C-30C
-14.7 to 100	DPT2090-100C	DPT2091-100C	-14.7 to 100	DPT2090C-100C	DPT2091C-100C
Vacuum			Vacuum		
14.7 PSIV	DPT2090-14.7V	DPT2091-14.7V	14.7 PSIV	DPT2090C-14.7V	DPT2091C-14.7V

Add DPT-CAL-CERT for Calibration Certificate

159 Swanson Road, Boxborough, MA 01719/Tel: 978-263-1400;
Toll Free: 800-257-3872; Fax: 978-264-0292; email: sales@setra.com

GUARANTEED 3 DAY SHIPMENT FOR STANDARD PARTS (less than 10 pieces)

Model DPT 264

Very Low Differential Pressure Transducer

Unidirectional Ranges: 0 - 0.1 to 0 - 100 in. W.C.
Bidirectional Ranges: 0 - ±0.5 to 0 - ±50 in. W.C.
Air or Non-Conducting Gas

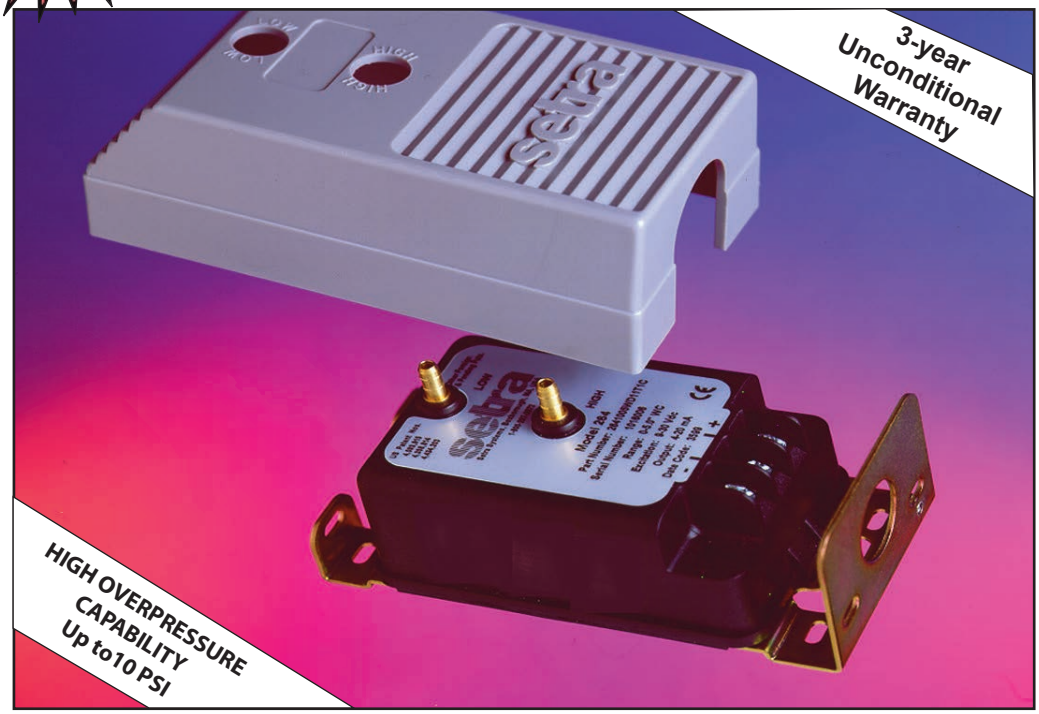

Setra Systems 264 pressure transducers sense differential or gauge (static) pressure and convert this pressure difference to a proportional electrical output for either unidirectional or bidirectional pressure ranges. The 264 Series is offered with a high level analog 0 to 5 VDC or 4 to 20 mA output.

Used in Building Energy Management Systems, these transducers are capable of measuring pressures and flows with the accuracy necessary for proper building pressurization and air flow control.

The 264 Series transducers are available for air pressure ranges as low as 0.1 in. W.C. full scale to 100 in. W.C. full scale. Static standard accuracy is ±1.0% full scale in normal ambient temperature environments, but higher accuracies are available. The units are temperature compensated to 0.033% FS/°F thermal error over the temperature range of 0°F to +150°F.

The Model 264 utilizes an improved all stainless steel micro-tig welded sensor. The tensioned stainless steel diaphragm and insulated stainless steel electrode, positioned close to the diaphragm, form a variable capacitor. Positive pressure moves the diaphragm toward the electrode, increasing the capacitance. A decrease in pressure moves the diaphragm away from the electrode, decreasing the capacitance. The change in capacita
converted to a linear DC electrical signal by Setra's unique electronic circuit.

The tensioned sensor allows up to 10 PSI overpressure (range dependent) with no damage to the unit. In addition, the parts that make up the sensor have thermally matched coefficients, which promote improved temperature performance and excellent long term stability.

AHU-2: BUILDING STATIC PRESSURE
CF-1, CF-2: ACROSS PREFILTER DP

NOTE: Setra quality standards are based on ANSI-Z540-1. The calibration of this product is NIST traceable.

U.S. Patent nos. 6019002; 6014800

Applications

- Heating, Ventilating and Air Conditioning (HVAC)
- Energy Management Systems
- Variable Air Volume and Fan Control (VAV)
- Environmental Pollution Control
- Lab and Fume Hood Control
- Oven Pressurization and Furnace Draft Controls

Features

- Installation Time Minimized with Snap Track Mounting and Easy- To-Access Pressure Ports and Electrical Connections
- 0 to 5 VDC or 2-wire 4 to 20 mA Analog Outputs Are Compatible with Energy Management Systems
- Reverse Wiring Protection
- Internal Regulation Permits Use with Unregulated DC Power Supplies
- Fire Retardent Case (UL 94 V-0 Approved)
- Meets CE Conformance Standards

When it comes to a product to rely on - choose the Model 264. When it comes to a company to trust - choose Setra.

setra
ISO-9001 Certified

800-257-3872
Visit Setra Online:
www.setra.com

159 Swanson Rd., Boxborough, MA 01719/Telephone: 978-263-1400/Fax: 978-264-0292

Model 264 Specifications

Performance Data

	Standard	Optional	
Accuracy* RSS(at constant temp)	±1.0% FS	±0.5% FS	±0.25% FS
Non-Linearity, BFSL	±0.96% FS	±0.38% FS	±0.22% FS
Hysteresis	0.10% FS	0.10% FS	0.10% FS
Non-Repeatability	0.05% FS	0.05% FS	0.05%FS

Thermal Effects**

Compensated Range °F(°C)	0 to +150 (-18 to +65)
Zero/Span Shift %FS/°F(°C)	0.033 (0.06)
Maximum Line Pressure	10 psi
Overpressure (Range Dependant)	Up to 10 psi (Range Dependent)
Long Term Stability	0.5% FS/1 YR

Position Effect (Unit is factory calibrated at 0g effect in the vertical position.)	Range	Zero Offset (%FS/G)
	To 0.5 in. WC	0.60
	To 1.0 in.WC	0.50
	To 2.5 in.WC	0.22
	To 5 in. WC	0.14

* RSS of Non-Linearity, Hysteresis, and Non-Repeatability.
**Units calibrated at nominal 70° F. Maximum thermal error computed from this datum.

Environmental Data

Temperature	
Operating* °F (°C)	0 to +175 (-18 to +79)
Storage °F (°C)	-65 to +250 (-54 to +121)

*Operating temperature limits of the electronics only. Pressure media temperatures may be considerably higher.

Physical Description

Case	Fire-Retardant Glass Filled Polyester (UL 94 V-0 Approved)
Mounting	Four screw holes on removable zinc plated steel base (designed for 2.75" snap track)
Electrical Connection	Screw Terminal Strip
Pressure Fittings	3/16" O.D. barbed brass pressure fitting for 1/4" push-on tubing
Zero and Span Adjustments	Accessible on top of case
Weight (approx.)	10 ounces

Pressure Media

Typically air or similar non-conducting gases.

Specifications subject to change without notice.

Electrical Data (Voltage)

Circuit	3-Wire (Com, Exc, Out)
Excitation	9 to 30 VDC
Output*	0 to 5 VDC**
Bidirectional output at zero pressure:	2.5 VDC**
Output Impedance	100 ohms

*Calibrated into a 50K ohm load, operable into a 5000 ohm load or greater.
**Zero output factory set to within ±50mV (±25 mV for optional accuracies).
**Span (Full Scale) output factory set to within ±50mV. (±25 mV for optional accuracies).

Electrical Data (Current)

Circuit	2-Wire
Output*	4 to 20mA**
Bidirectional output at zero pressure:	12mA**
External Load	0 to 800 ohms

Minimum supply voltage (VDC) = 9+ 0.02 x (Resistance of receiver plus line).
Maximum supply voltage (VDC) = 30+ 0.004 x (Resistance of receiver plus line).

*Calibrated at factory with a 24 VDC loop supply voltage and a 250 ohm load.
**Zero output factory set to within ±0.16mA (±0.08 mA for optional accuracies).
**Span (Full Scale) output factory set to wtihin ±0.16mA (±0.08 mA for optional accuracies).

Outline Drawings

Code T1 Electrical Termination Dimensions

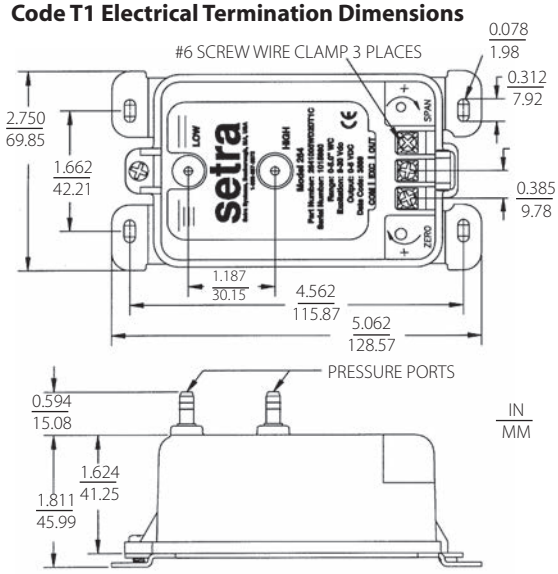

Optional 1/2" Conduit Electrical Enclosure Dimensions

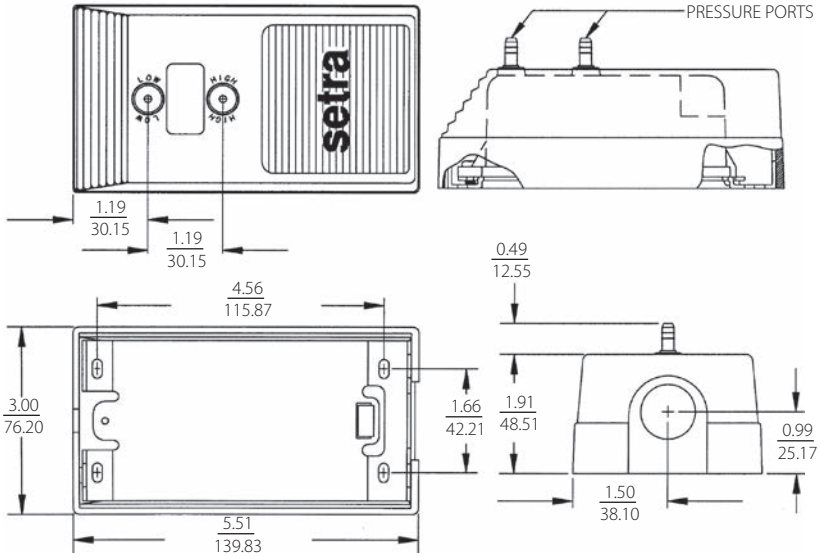

ORDERING INFORMATION

Input Range (Inches of WC)	Product Codes for Accuracy		Product Codes for 0.5% Accuracy		Product Codes for 0.25% Accuracy	
	0 to 5 VDC Output	4 to 20 mA	0 to 5 VDC Output	4 to 20 mA	0 to 5 VDC Output	4 to 20 mA
0 to 0.1	DPT2640-0R1D-1	DPT2641-0R1D-1	DTP2640-0R1D	DPT2641-0R1D	DPT2640-0R1D-A	DPT2640-0R1D-A
0 to 0.25	DPT2640-R25D-1	DPT2641-R25D-1	DPT2640-R25D	DPT2641-R25D	DPT2640-R25D-A	DPT2641-R25D-A
0 to 0.5	DPT2640-0R5D-1	DPT2641-0R5D-1	DPT2640-0R5D	DPT2641-0R5D	DPT2640-0R5D-A	DPT2641-0R5D-A
0 to 1	DPT2640-001D-1	DPT2641-001D-1	DPT2640-001D	DPT2641-001D	DPT2640-001D-A	DPT2641-001D-A
0 to 2.5	DPT2640-2R5D-1	DPT2641-2R5D-1	DPT2640-2R5D	DPT2641-2R5D	DPT2640-2R5D-A	DPT2641-2R5D-A
0 to 5	DPT2640-005D-1	DPT2641-005D-1	DPT2640-005D	DPT2641-005D	DPT2640-005D-A	DPT2641-005D-A
0 to 10	DPT2640-010D-1	DPT2641-010D-1	DPT2640-010D	DPT2641-010D	DPT2640-010D-A	DPT2641-010D-A
0 to 25	DPT2640-025D-1	DPT2641-025D-1	DPT2640-025D	DPT2641-025D	DPT2640-025D-A	DPT2641-025D-A
0 to 50	DPT2640-050D-1	DPT2641-050D-1	DPT2640-050D	DPT2641-050D	DPT2640-050D-A	DPT2641-050D-A
0 to 100	DPT2640-100D-1	DPT2641-100D-1	DPT2640-100D	DPT2641-100D	DPT2640-100D-A	DPT2641-100D-A
-0.1 to 0.1	DPT2640-0R1B-1	DPT2641-0R1B-1	DPT2640-0R1B	DPT2641-0R1B	DPT2640-0R1B-A	DPT2641-0R1B-A
-0.25 to 0.25	DPT2640-R25B-1	DPT2641-R25B-1	DPT2640-R25B	DPT2641-R25B	DPT2640-R25B-A	DPT2641-R25B-A
-0.5 to 0.5	DPT2640-0R5B-1	DPT2641-0R5B-1	DPT2640-0R5B	DPT2641-0R5B	DPT2640-0R5B-A	DPT2641-0R5B-A
-1 to 1	DPT2640-001B-1	DPT2641-001B-1	DPT2640-001B	DPT2641-001B	DPT2640-001B-A	DPT2641-001B-A
-2.5 to 2.5	DPT2640-2R5B-1	DPT2641-2R5B-1	DPT2640-2R5B	DPT2641-2R5B	DPT2640-2R5B-A	DPT2641-2R5B-A
-5 to 5	DPT2640-005B-1	DPT2641-005B-1	DPT2640-005B	DPT2641-005B	DPT2640-005B-A	DPT2641-005B-A

Add DPT-CAL-CERT for Calibration Certificate. Note: All units provided with Calibration Certificate

While we provide application assistance on all Setra products, both personally and through our literature, it is the customer's responsibility to determine the suitability of the product in the application.

159 Swanson Road, Boxborough, MA 01719/Tel: 978-263-1400;
Toll Free: 800-257-3872; Fax: 978-264-0292; email: sales@setra.com

SSP264 Rev.I 04/25/2011

Code No. LIT-1900948
Issued November 13, 2015

F261 Series Fluid Flow Switches

FUEL TANK SYSTEM: DOWNSTREAM OF PUMPS P4.1& P4.2 SUPPLY FUEL LINE

Description

The F261 Series Flow Switches respond to fluid flow in lines carrying water, ethylene glycol, or other nonhazardous fluids. These models also work in applications with swimming pool water and lubricating oils.

F261 Series Standard Flow Switches use a variety of paddle sizes to respond to fluid flow rates in applications with pipe sizes greater than 1 inch trade size.

Refer to the *F261 Series Fluid Flow Switches Product Bulletin (LIT-12011987)* for important product application information.

Features

- Type 3R (NEMA) or Type 4 (NEMA) enclosure allows use in indoor or outdoor applications.
- Viton® diaphragms allow use in fluid lines carrying chlorinated water, treated water, or other nonhazardous fluids.
- low-flow operation on low-flow models actuates switch with less than 1.0 GPM (3.8 L/min) flow for water applications or 9.0 GPM (34.1 L/min) flow for steam applications.
- maximum fluid pressure of 290 psig (20 bar) permits use in a wide range of pressure flow conditions.



F261 Flow Switch

Repair Information

If the F261 Series Flow Switch fails to operate within its specifications, replace the unit. For a replacement F261 Series Flow Switch, contact the nearest Johnson Controls® representative.

Fuel oil pumps don't require flow switch

Selection Chart

F261 Series Standard Model Flow Switches

Product Code Number	Description
F261KAH-V01C	Standard model flow switch with Type 3R (NEMA) enclosure; 1 in., 2 in., 3 in., and 6 in. stainless steel paddles, lock-tooth washer, and stainless steel paddle screw supplied uninstalled
F261MAH-V01C	Standard model flow switch with Type 4 (NEMA) enclosure; 1 in., 2 in., 3 in., and 6 in. stainless steel paddles, lock-tooth washer, and stainless steel paddle screw supplied uninstalled
F261MAL-V01C	Standard model flow switch with Type 4 (NEMA) enclosure; 1 in., 2 in., 3 in., and 6 in. stainless steel paddles, lock-tooth washer, and stainless steel paddle supplied uninstalled.

F261 Series Low-Flow Model Flow Switches

Product Code Number	Description
F261KEH-V01C	Low-flow model flow switch with Type 3R (NEMA) enclosure; 1/2 in. x 1/2 in. External NPTF inlet and outlet
F261KFH-V01C	Low-flow model flow switch with Type 3R (NEMA) enclosure; 3/4 in. x 3/4 in. External NPTF inlet and outlet
F261KFH-V02C	Low-flow model flow switch with Type 3R (NEMA) enclosure; 3/4 in. x 3/4 in. External NPTF inlet and outlet
F261MEH-V01C	Low-flow model flow switch with Type 4 (NEMA) enclosure; 1/2 in. x 1/2 in. External NPTF inlet and outlet
F261MFH-V01C	Low-flow model flow switch with Type 4 (NEMA) enclosure; 3/4 in x 3/4 in. External NPTF inlet and outlet

Replacement Paddle Parts

Product Code Number	Description
KIT21A-600	Stainless steel three-piece paddle (3 in., 2 in., and 1 in. segments)
KIT21A-601	Stainless steel 6 in. paddle
PLT52A-600R	Stainless steel three-piece paddle (3 in., 2 in., and 1 in. segments) and Stainless steel 6 in. paddle

Technical Specifications

F261xxH Series Standard Controls Electrical Ratings

Volts, 50/60 Hz	UL60730/UL1059				EN60730	
	24	120	208	240	24	230
Horsepower	–	1	1	1	–	–
Full Load Amperes	–	16	10	10	–	8
Locked Rotor Amperes	–	96	60	60	–	48
Resistive Amperes	16	16	10	10	16	16
Pilot Duty VA	125	720	720	720	77	720

The performance specifications are nominal and conform to acceptable industry standards. For applications at conditions beyond these specifications, consult the local Johnson Controls office. Johnson Controls, Inc. shall not be liable for damages resulting from misapplication or misuse of its products. © 2015 Johnson Controls, Inc.

F261 Series Fluid Flow Switches (Continued)

UL Conformity Declaration Information

Information	Description
Purpose of Control	F261 Fluid Flow Switch
Construction of Control	Electronic independently mounted control
Number of Cycles	100,000 cycles
Method of Mounting Control	Mounting to sensed media vessel/orientation
Type 1 or Type 2 Action	Type 1.C (Microinterruption)
External Pollution Situation	Pollution degree 4
Internal Pollution Situation	Pollution degree 2
Rated Impulse Voltage	4,000 VAC
Ball Pressure Temperature	Enclosure: 266°F (130°C) Switch Component: 252°F (122°C)
Control Adjustment Instruction	-
Field Wiring Rating	**Wire/Cord Temperature Ratings:** 140°F (60°C) only permitted when ambient air and media are less than 113°F (45°C) 167°F (75°C) only permitted when ambient air and media are less than 140°F (60°C) 194°F (90°C) only permitted when ambient air is less than 140°F (60°C) and media is less than 167°F (75°C) 302°F (150°C) permitted when ambient air is less than 140°F (60°C) and media is less than 249°F (121°C)
Vessel Pressure	F261 Fluid Flow Switch: 290 psi (20 Bar)

F261 Series Fluid Flow Switches	
Switch	Single-Pole, Double-Throw (SPDT)
Enclosure	UL: Type 3R or Type 4 CE: IP43 (IP23 with drain hole plug removed) or IP67
Wiring Connections	Three color-coded screw terminals and one ground terminal
Conduit Connection	One 7/8 in. (22 mm) hole for 1/2 in. trade size (or PG16) conduit
Pipe Connector	Standard: 1 in. 11-1/2 NPT Threads
Maximum Fluid Pressure	290 psi (20 bar)
Minimum Fluid Temperature[1]	-20°F (-29°C)
Maximum Fluid Temperature[2]	250°F (121°C)
Ambient Conditions	-40 to 140°F (-40 to 60°C)
Compliance CE	**North America:** cULus Listed; UL 60730, File E6688; FCC Compliant to CFR47, Part 15, Subpart B, Class B Industry Canada (IC) Compliant to Canadian ICES-003, Class B limits
	Europe: CE Mark – Johnson Controls, Inc. declares that this product is in compliance with the essential requirements and other relevant provisions of the EMC Directive and the Low Voltage Directive.
	Australia/New Zealand Mark: RCM Compliant

1. Ensure that the low liquid temperature combined with the low ambient temperature does not lead to the freezing the liquid inside the body (or bellows, where appropriate). Please observe the liquid freezing point.
2. At higher ambient temperatures, the maximum allowed liquid temperature becomes lower. The temperature of the electrical switch inside should not exceed 158°F (70°C).

The performance specifications are nominal and conform to acceptable industry standards. For applications at conditions beyond these specifications, consult the local Johnson Controls office. Johnson Controls, Inc. shall not be liable for damages resulting from misapplication or misuse of its products. © 2015 Johnson Controls, Inc.

Code No. LIT-1927195
Issued May 2018

P32 Series Sensitive Pressure Switch Catalog Page

Description

This differential pressure switch is used to sense pressure/air flow in ducts.

Refer to the *P32 Series Sensitive Differential Pressure Switch Product Bulletin (LIT-125435)* for important product application information.

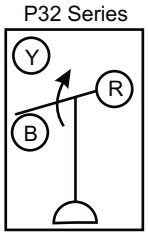

P28 Action Diagram

Features

- easy-to-read setpoint scale
- versatile mounting options

Applications

- pressure/air flow proving with electric duct heaters, humidifiers, and other equipment
- maximum pressure/air flow control for variable volume systems
- reheat duct powered systems
- clogged filter detection
- detection of icing of air conditioning coils and initiation of defrost cycle
- sensitive pressure settings
- dust-tight snap switch

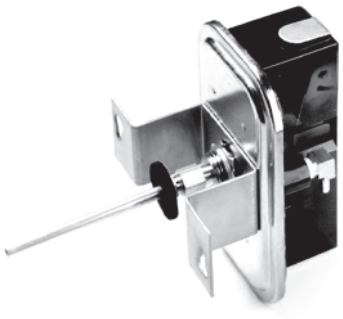

P32 Sensitive Pressure Switch

Repair Information

If the P32 Series Sensitive Pressure Switch fails to operate within its specifications, replace the unit. For a replacement switch, contact the nearest Johnson Controls® representative.

AHU-2: REMOTE PROBDE FOR DA HIGH PRESS SW (DOWNSTREAM OF SF) CF-1 & CF-2 PRE-FILTER

Selection Chart

Product Code Number	Ambient Temperature Min./Max.	Connector	Maximum Over-pressure psig (kPa)[1]	Contact Action	Range in. WC (kPa)	Sensitivity at Min. Setpoint in. WC (kPa)	Setpoint	Scale Plate	Mounting Bracket (Included)
P32AC-1C	-40°F (-40°C) min. 167°F (75°C) max.	High Pressure connectors are metal 1/8 in. internal NPT inside, 1/2 in. NPSM outside for mounting Low pressure connectors are molded, 1/8 in. internal NPT	1 (6.895)	SPDT	0.15 to 12 (0.037 to 2.99)	0.07 (0.017)	Adjustable	Yes	L BKT182-1
P32AC-2C[2]					0.05 to 5 (0.012 to 1.24)	0.04 (0.01)			U BKT229-1
P32AF-1C						0.025 (0.006)			L BKT182-1
P32AF-2C[2]									U BKT229-1

1. Maximum overpressure at either connection
2. Supplied with 1/4 in. compression fitting, 4 in. extension tube, two mounting screws, and O-gasket (angle barbed fitting installed)

Accessories

The switch can be mounted directly or with the supplied mounting bracket.

Product Code Number	Description
FTG18A-600R	Remote Mounting Kit: 4 in. flanged sensing tube, two barbed fittings, two No. 10 screws, and a gasket

Technical Specifications

Electrical Ratings

Motor Ratings VAC	120	208	240
Type P32AC (Standard Differential, 1/2 hp)			
AC Full Load A	9.8	5.65	4.9
AC Locked Rotor A	58.8	33.9	29.4
Non-Inductive or Resistive Load	15 A, 24 to 277 VAC		
Pilot Duty	125 VA, 24 VAC; 360 VA, 120 to 277 VAC		
Type P32AF (Close Differential, 1/4 hp)			
AC Full Load A	5.8	3.3	2.9
AC Locked Rotor A	34.8	19.8	17.4
Non-Inductive or Resistive Load	10 A, 24 to 277 VAC		
Pilot Duty	125 VA, 24 VAC; 360 VA, 120 to 277 VAC		

The performance specifications are nominal and conform to acceptable industry standards. For applications at conditions beyond these specifications, consult the local Johnson Controls office. Johnson Controls shall not be liable for damages resulting from misapplication or misuse of its products. © 2018 Johnson Controls.

Code No. LIT-1900562
Issued November 2017

M9208-xxx-x Series Electric Spring-Return Actuators

Description

The M9208-xxx-x Series Electric Spring-Return Actuators provide control of dampers in HVAC systems. All actuators in this series provide 70 lb·in (8 N·m) rated torque. A mechanical spring-return system provides rated torque with and without power applied to the actuator. The series includes the following control options:

- On/Off, 24 V, 120 VAC, 230 VAC power
- On/Off and Floating Point, 24 V power
- Proportional, 24 V power, for 0(2) to 10 VDC or 0(4) to 20 mA Control Signal

These actuators are configured for direct mounting and do not require a damper linkage. Actuators can be mounted directly to a damper shaft from 5/16 to 5/8 in. (8 to 16 mm) diameter with a universal clamp. For shafts up to 3/4 in. (19 mm) diameter, use the accessory Large Shaft Coupler Kit M9208-600. An accessory crankarm and remote mounting kit are available for applications where the actuator cannot be direct coupled to the damper shaft. Optional line voltage auxiliary switches indicate an end-stop position or perform switching functions within the selected rotation range.

Refer to the *M9208-xxx-x Series Electric Spring-Return Actuators Product Bulletin (LIT-12011480)* for important product application and single point of contact information.

Features

- 70 lb·in (8 N·m) rated torque
- direct-coupled design
- reversible mounting
- electronic stall detection
- double-insulated construction
- microprocessor-controlled brushless DC motor (-AGx and -GGx types)
- external mode selection switch (-AGx and -GGx types)
- locking manual override with auto release and crank storage
- integral cables with colored and numbered conductors
- integral connectors for 3/8 in. (10 mm) Flexible Metal Conduit (FMC)
- optional integrated auxiliary switches
- UL, CE, and C-Tick compliance
- manufactured under International Standards Organization (ISO) 9001 quality control standards
- 5-year warranty



M9208-xxx-x Series Electric Spring-Return Actuator

Accessories and Replacement Parts

Code Number	Description
DMPR-KC003	7 in. (178 mm) Blade Pin Extension (without Bracket) for Johnson Controls Direct-Mount Damper Applications (Quantity 1) **Note:** Available with damper and may be ordered separately.
M9000-322	Weather Shield Kit for Damper Application of M9203, M9208, VA9104, and VA9308/9310 Series Electric Spring-Return Actuators (Quantity 1)
M9000-400	Jackshaft Linkage Kit. Open-Ended Design Enables Clamping onto a Jackshaft without Requiring Access to the Ends of the Jackshaft. (Quantity 1)
M9000-560	Ball Valve Linkage Kit for applying M9203 and M9208 Series Electric Spring-Return Actuators to VG1000 Series Valves (Quantity 1)
M9000-604	Replacement Anti-Rotation Bracket Kit for M9208, M9210, and M9220 Series Electric Spring-Return Actuators (Quantity 1)
M9000-606	Position Indicator for Damper Applications of M9203 and M9208 Series Actuators (Quantity 5)
M9200-100	Threaded Conduit Adapter, 1/2 NPSM, for M9210(20) and M(VA)9208 Series Actuators (Quantity 5)
M9208-100	Remote Mounting Kit, Including Mounting Bracket, M9208-150 Crankarm, Ball Joint, and Mounting Fasteners (Quantity 1)
M9208-150	Crankarm Adapter Kit (Quantity 1)
M9208-600	Large Shaft Coupler Kit (with Locking Clip) for Mounting M9208 Series Electric Spring-Return Actuators on Dampers with Round Shafts from 1/2 to 3/4 in. (12 to 19 mm) or Square Shafts from 3/8 to 9/16 in. (10 to 14 mm) (Quantity 1)
M9208-601	Replacement Standard Coupler Kit (with Locking Clip) for Mounting M9208 Series Electric Spring-Return Actuators on Dampers with Round Shafts from 5/16 to 5/8 in. (8 to 16 mm) or Square Shafts from 1/4 to 1/2 in. (6 to 12 mm) (Quantity 1)
M9208-602	Replacement Locking Clips for M9208 Series Electric Spring-Return Actuators (Quantity 5)
M9208-603	Adjustable Stop Kit for M9208 Series Electric Spring-Return Actuators (Quantity 1)
M9220-604	Replacement Manual Override Cranks for M9208 Series Electric Spring-Return Actuators with Long Crank Radius: 2.83 in. (72 mm) (Quantity 5)
M9208-605	Replacement Manual Override Cranks for M9208 Series Electric Spring-Return Actuators with Short Crank Radius: 1.83 in. (46.5 mm) (Quantity 5)

CF-1 & CF-2: OA & RA DAMPER ACTUATORS

The performance specifications are nominal and conform to acceptable industry standards. For applications at conditions beyond these specifications, consult the local Johnson Controls office. Johnson Controls shall not be liable for damages resulting from misapplication or misuse of its products. © 2017 Johnson Controls

M9208-xxx-x Series Electric Spring-Return Actuators (Continued)

Selection Chart

Code Number	Rotation Time (Seconds) for 90°		Power Requirements				Power Consumption			Input Signal			Position Feedback	Auxiliary Switches	Electrical Connection		
	Power On (Running)	Power Off (Spring Return)	24 VAC +/- 25%, VDC +20%/-10%	24 VAC +/- 20%, VDC +20%/-10%	120 VAC +/- 10%	230 VAC +/- 10%	VA Rating, Transformer Sizing	VA: Running (Holding)	Amperage: Running (Holding)	On/Off	Floating Point	0(2) to 10 VDC 0(4) to 20 mA (with 500 Ohm Resistor)	0(2) to 10 VDC	2 Single-Pole, Double-Throw (SPDT), 5.0 A (2.9 A Inductive) at 240 V	48 in. (1.2 m) 18 AWG Appliance Cable	120 in. (3.05 m) 19 AWG Plenum Cable	Integral 3/8 in. (10 mm) FMC Connectors
M9208-AGA-2	150	17 to 25[1]		■			8	7.9 (5.5)	—	■	■					■	■
M9208-AGA-3	150	17 to 25[1]		■			8	7.9 (5.5)	—	■	■				■		■
M9208-AGC-3	150	17 to 25[1]		■			8	7.9 (5.5)	—	■	■			■	■		■
M9208-BGA-3	55 to 71	13 to 26[2]	■				7	6.1 (1.2)	—	■					■		■
M9208-BGC-3	55 to 71	13 to 26[2]	■				7	6.1 (1.2)	—	■				■	■		■
M9208-BAA-3	55 to 71	13 to 26[2]			■		—	—	0.05 (0.03)	■					■		■
M9208-BAC-3	55 to 71	13 to 26[2]			■		—	—	0.05 (0.03)	■				■	■		■
M9208-BDA-3	55 to 71	13 to 26[2]				■	—	—	0.04 (0.03)	■					■		■
M9208-BDC-3	55 to 71	13 to 26[2]				■	—	—	0.04 (0.03)	■				■	■		■
M9208-GGA-2	150	17 to 25[1]		■			8	7.9 (5.5)	—			■	■			■	■
M9208-GGA-3	150	17 to 25[1]		■			8	7.9 (5.5)	—			■	■		■		■
M9208-GGC-3	150	17 to 25[1]		■			8	7.9 (5.5)	—			■	■	■	■		■

1. 22 seconds nominal at room temperature and rated load, 94 seconds maximum at rated load and -40ºF (-40ºC)
2. 21 seconds nominal at room temperature and rated load, 39 seconds maximum at rated load and -4ºF (-20ºC), 108 seconds maximum at 53 lb·in (6 N·m) and -40ºF (-40ºC)

The performance specifications are nominal and conform to acceptable industry standards. For applications at conditions beyond these specifications, consult the local Johnson Controls office. Johnson Controls shall not be liable for damages resulting from misapplication or misuse of its products. © 2017 Johnson Controls

M9208-xxx-x Series Electric Spring-Return Actuators (Continued)

Technical Specifications

M9208-GGx-x Series Proportional Electric Spring-Return Actuator (Part 1 of 2)		
Power Requirements	**-GGx Models**	AC 24 V (AC 19.2 V to 28.8 V) at 50/60 Hz: Class 2 (North America) or Safety Extra-Low Voltage (SELV) (Europe), 7.9 VA Running, 5.5 VA Holding Position DC 24 V (DC 21.6 V to 28.8 V): Class 2 (North America) or SELV (Europe), 3.5 W Running, 1.9 W Holding Position Minimum Transformer Size: 8 VA per Actuator
Input Signal / Adjustments	**-GGx Models**	Factory Set at DC 0 to 10 V, CW Rotation with Signal Increase; Selectable DC 0 (2) to 10 V or 0 (4) to 20 mA with Field Furnished 500 Ohm, 0.25 W Minimum Resistor; Switch Selectable Direct or Reverse Action with Signal Increase
Control Input Impedance	**-GGx Models**	Voltage Input: 100,000 Ohms Current Input: 500 Ohms with Field Furnished 500 Ohm Resistor
Feedback Signal	**-GGx Models**	DC 0 (2) to 10 V for Desired Rotation Range up to 95° Corresponds to Rotation Limits, 0.5 mA at 10 V Maximum
Auxiliary Switch Rating	**-xxC Models**	Two Single-Pole, Double-Throw (SPDT), Double-Insulated Switches with Gold over Silver Contacts: AC 24 V, 50 VA Pilot Duty AC 120 V, 5.8 A Resistive, 1/4 hp, 275 VA Pilot Duty AC 240 V, 5.0 A Resistive, 1/4 hp, 275 VA Pilot Duty
Spring Return		Direction is Selectable with Mounting Position of Actuator: Actuator Face Labeled A is away from Damper or Valve: CCW Spring Return Actuator Face Labeled B is away from Damper or Valve: CW Spring Return
Rated Torque	**Power On (Running)**	70 lb·in (8 N·m) All Operating Temperatures
	Power Off (Spring Returning)	70 lb·in (8 N·m) All Operating Temperatures
Rotation Range		Maximum Full Stroke: 95° Adjustable Stop: 35° to 95° Maximum Position
Rotation Time for 90 Degrees of Travel	**Power On (Running)**	150 Seconds Constant for 0 to 70 lb·in (8 N·m) Load, At All Operating Conditions
	Power Off (Spring Returning)	17 to 25 Seconds for 0 to 70 lb·in (8 N·m) Load, at Room Temperature 22 Seconds Nominal at Full Rated Load 94 Seconds Maximum with 70 lb·in (8 N·m) Load, at -40°F (-40°C)
Life Cycles		60,000 Full Stroke Cycles with 70 lb·in (8 N·m) Load 1,500,000 Repositions with 70 lb·in (8 N·m) Load
Audible Noise Rating	**Power On (Running)**	< 35 dBA at 70 lb·in (8 N·m) Load, at a Distance of 39-13/32 in. (1 m)
	Power On (Holding)	< 20 dBA at a Distance of 39-13/32 in. (1 m)
	Power Off (Spring Returning)	< 52 dBA at 70 lb·in (8 N·m) Load, at a Distance of 39-13/32 in. (1 m)
Electrical Connections	**Models: GGx-3**	48 in. (1.2 m) UL 758 Type AWM Halogen-Free Cable with 18 AWG (0.85 mm²) Conductors and0.25 in. (6 mm) Ferrule Ends
	Models: GGA-2	120 in. (3.05 m) UL 444 Type CMP Plenum Rated Cable with 19 AWG (0.75 mm²) Conductors and 0.25 in. (6 mm) Ferrule Ends
	Auxiliary Switches (-xxC Models)	48 in. (1.2 m) UL 758 Type AWM Halogen-Free Cable with 18 AWG (0.85 mm²) Conductors and 0.25 in. (6 mm) Ferrule Ends
Conduit Connections		Integral Connectors for 3/8 in. (10 mm) Flexible Metal Conduit
Mechanical Connections	**Round Shafts**	Range of Sizes: 5/16 to 5/8 in. (8 to 16 mm)
	Square Shafts	Range of Sizes: 1/4 to 1/2 in. (6 to 12 mm)
Enclosure Rating		NEMA 2 (IP54) for All Mounting Directions
Ambient Conditions	**Standard Operating**	-40 to 140°F (-40 to 60°C); 90% RH Maximum, Noncondensing
	Storage	-40 to 185ºF (-40 to 85ºC); 95% RH Maximum, Noncondensing
Dimensions		6.33 x 3.90 x 2.26 in. (160.7 x 99 x 57.5 mm)

The performance specifications are nominal and conform to acceptable industry standards. For applications at conditions beyond these specifications, consult the local Johnson Controls office. Johnson Controls shall not be liable for damages resulting from misapplication or misuse of its products. © 2017 Johnson Controls

M9208-xxx-x Series Electric Spring-Return Actuators (Continued)

M9208-GGx-x Series Proportional Electric Spring-Return Actuator (Part 2 of 2)		
Compliance	**United States**	UL Listed, CCN XAPX, File E27734; to UL 60730-1A: 2003-08, Ed. 3.1, Automatic Electrical Controls for Household and Similar Use; and UL 60730-2-14: 2002-02, Ed. 1, Part 2, Particular Requirements for Electric Actuators. (Models: All)
	Canada	UL Listed, CCN XAPX7, File E27734; to UL 60730-1:02-CAN/CSA: July 2002, 3rd Ed., Automatic Electrical Controls for Household and Similar Use; and CSA C22.2 No. 24-93 Temperature Indicating and Regulating Equipment (Models: All).
CE	**Europe**	CE Mark – Johnson Controls declares that this product is in compliance with the essential requirements and other relevant provisions of the EMC Directive and Low Voltage Directive.
	Australia and New Zealand	RCM Mark, Australia/NZ Emissions Compliant (Models: All)
Shipping Weight		Models: -GGA: 3.43 lb (1.6 kg) Models: -GGC: 3.8 lb (1.7 kg)

M9208-AGx-x Series On/Off and Floating Point Control Electric Spring-Return Actuator (Part 1 of 2)		
Power Requirements	**-AGx Models**	AC 24 V (AC 19.2 V to 28.8 V) at 50/60 Hz: Class 2 (North America) or Safety Extra-Low Voltage (SELV) (Europe), 7.9 VA Running, 5.5 VA Holding Position DC 24 V (DC 21.6 V to 28.8 V): Class 2 (North America) or SELV (Europe), 3.5 W Running, 1.9 W Holding Position Minimum Transformer Size: 8 VA per Actuator
Input Signal	**-AGx Models**	AC 19.2 to 28.8 V at 50/60 Hz or DC 24 V +20%/-10%, Class 2 (North America) or SELV (Europe) Minimum Pulse Width: 500 ms
Control Input Impedance	**-AGx Models**	3,000 Ohm Control Inputs
Auxiliary Switch Rating	**-xxC Models**	Two SPDT, Double-Insulated Switches with Gold over Silver Contacts: AC 24 V, 50 VA Pilot Duty AC 120 V, 5.8 A Resistive, 1/4 hp, 275 VA Pilot Duty AC 240 V, 5.0 A Resistive, 1/4 hp, 275 VA Pilot Duty
Spring Return		Direction is Selectable with Mounting Position of Actuator: Actuator Face Labeled A is away from Damper or Valve: CCW Spring Return Actuator Face Labeled B is away from Damper or Valve: CW Spring Return
Rated Torque	**Power On (Running)**	70 lb·in (8 N·m) All Operating Temperatures
	Power Off (Spring Returning)	70 lb·in (8 N·m) All Operating Temperatures
Rotation Range		Maximum Full Stroke: 95° Adjustable Stop: 35 to 95° Maximum Position
Rotation Time for 90 Degrees of Travel	**Power On (Running)**	150 Seconds Constant for 0 to 70 lb·in (8·N m) Load, At All Operating Conditions
	Power Off (Spring Returning)	17 to 25 Seconds for 0 to 70 lb·in (8 N·m) Load, at Room Temperature 22 Seconds Nominal at Full Rated Load 94 Seconds Maximum with 70 lb·in (8 N·m) Load, at -40°F (-40°C)
Life Cycles		60,000 Full Stroke Cycles with 70 lb·in (8 N·m) Load 1,500,000 Repositions with 70 lb·in (8 N·m) Load
Audible Noise Rating	**Power On (Running)**	< 35 dBA at 70 lb·in (8 N·m) Load, at a Distance of 39-13/32 in. (1 m)
	Power On (Holding)	< 20 dBA at a Distance of 39-13/32 in. (1 m)
	Power Off (Spring Returning)	< 52 dBA at 70 lb·in (8 N·m) Load, at a Distance of 39-13/32 in. (1 m)
Electrical Connections	**Models: AGx-3**	48 in. (1.2 m) UL 758 Type AWM Halogen-Free Cable with 18 AWG (0.85 mm²) Conductors and 0.25 in. (6 mm) Ferrule Ends
	Models: AGA-2	120 in. (3.05 m) UL 444 Type CMP Plenum Rated Cable with 19 AWG (0.75 mm²) Conductors and 0.25 in. (6 mm) Ferrule Ends
	Auxiliary Switches (-xxC Models)	48 in. (1.2 m) UL 758 Type AWM Halogen-Free Cable with 18 AWG (0.85 mm²) Conductors and 0.25 in. (6 mm) Ferrule Ends
Conduit Connections		Integral Connectors for 3/8 in. (10 mm) Flexible Metal Conduit
Mechanical Connections	**Round Shafts**	Range of Sizes: 5/16 to 5/8 in. (8 to 16 mm)
	Square Shafts	Range of Sizes: 1/4 to 1/2 in. (6 to 12 mm)
Enclosure Rating		NEMA 2 (IP54) for All Mounting Directions

The performance specifications are nominal and conform to acceptable industry standards. For applications at conditions beyond these specifications, consult the local Johnson Controls office. Johnson Controls shall not be liable for damages resulting from misapplication or misuse of its products. © 2017 Johnson Controls

M9208-xxx-x Series Electric Spring-Return Actuators (Continued)

M9208-AGx-x Series On/Off and Floating Point Control Electric Spring-Return Actuator (Part 2 of 2)		
Ambient Conditions	**Standard Operating**	-40 to 140°F (-40 to 60°C); 90% RH Maximum, Noncondensing
	Storage	-40 to 185ºF (-40 to 85ºC); 95% RH Maximum, Noncondensing
Dimensions		6.33 x 3.90 x 2.26 in. (160.7 x 99 x 57.5 mm)
Compliance	**United States**	UL Listed, CCN XAPX, File E27734; to UL 60730-1A: 2003-08, Ed. 3.1, Automatic Electrical Controls for Household and Similar Use; and UL 60730-2-14: 2002-02, Ed. 1, Part 2, Particular Requirements for Electric Actuators. (Models: All)
	Canada	UL Listed, CCN XAPX7, File E27734; to UL 60730-1:02-CAN/CSA: July 2002, 3rd Ed., Automatic Electrical Controls for Household and Similar Use; and CSA C22.2 No. 24-93 Temperature Indicating and Regulating Equipment (Models: All).
CE	**Europe**	CE Mark – Johnson Controls declares that this product is in compliance with the essential requirements and other relevant provisions of the EMC Directive and Low Voltage Directive.
	Australia and New Zealand	RCM Mark, Australia/NZ Emissions Compliant (Models: All)
Shipping Weight		Models: -AGA: 3.43 lb (1.6 kg) Models: -AGC: 3.8 lb (1.7 kg)

M9208-Bxx-3 Series On/Off Electric Spring-Return Actuators (Part 1 of 2)		
Power Requirements	**-BGx Models**	AC 24 V (AC 18 V to 30 V) at 50/60 Hz: Class 2 (North America) or Safety Extra-Low Voltage (SELV) (Europe), 6.1 VA Running, 1.2 VA Holding Position DC 24 V (DC 21.6 V to 28.8 V): Class 2 (North America) or SELV (Europe), 3.5 W Running, 0.5 W Holding Position Minimum Transformer Size: 7 VA per Actuator
	-BAx Models	AC 120 V (AC 102 V to 132 V) at 60 Hz: 0.05 A Running, 0.03 A Holding Position
	-BDx Models	AC 230 V (AC 198 V to 264 V) at 50/60 Hz: 0.04 A Running, 0.03 A Holding Position
Auxiliary Switch Rating	**-xxC Models**	Two SPDT, Double-Insulated Switches with Gold over Silver Contacts: AC 24 V, 50 VA Pilot Duty AC 120 V, 5.8 A Resistive, 1/4 hp, 275 VA Pilot Duty AC 240 V, 5.0 A Resistive, 1/4 hp, 275 VA Pilot Duty
Spring Return		Direction is Selectable with Mounting Position of Actuator: Actuator Side A is away from Damper or Valve: CCW Spring Return Actuator Side B is away from Damper or Valve: CW Spring Return
Rated Torque	**Power On (Running)**	70 lb·in (8 N·m) All Operating Temperatures
	Power Off (Spring Returning)	70 lb·in (8 N·m) at Standard Operating Temperatures 53 lb·in (6 N·m) at Extended Operating Temperatures
Rotation Range		Maximum Full Stroke: 95° Adjustable Stop: 35 to 95°, Maximum Position
Rotation Time for 90 Degrees of Travel	**Power On (Running)**	55 to 71 Seconds for 0 to 70 lb·in (8 N·m) Load, at All Operating Conditions 60 Seconds Nominal at Full Rated Load (0.25 rpm)
	Power Off (Spring Returning)	13 to 26 Seconds for 0 to 70 lb·in (8 N·m) Load, at Room Temperature 21 Seconds Nominal at Full Rated Load 39 Seconds Maximum with 70 lb·in (8 N·m) Load at -4°F (-20°C) 108 Seconds Maximum with 53 lb·in (6 N·m) Load at -40°F (-40°C)
Life Cycles		60,000 Full-Stroke Cycles with 70 lb·in (8 N·m) Load
Audible Noise Rating	**Power On (Running)**	< 47 dBA at 70 lb·in (8 N·m) Load, at a Distance of 39-13/32 in. (1 m)
	Power On (Holding)	< 20 dBA at a Distance of 39-13/32 in. (1 m)
	Power Off (Spring Returning)	< 52 dBA at 70 lb·in (8 N·m) Load, at a Distance of 39-13/32 in. (1 m)
Electrical Connections	**Actuator (All Models)**	48 in. (1.2 m) UL 758 Type AWM Halogen-Free Cable with 18 AWG (0.85 mm²) Conductors and 0.25 in. (6 mm) Ferrule Ends
	Auxiliary Switches (-xxC Models)	48 in. (1.2 m) UL 758 Type AWM Halogen-Free Cable with 18 AWG (0.85 mm²) Conductors and 0.25 in. (6 mm) Ferrule Ends
Conduit Connections		Integral Connectors for 3/8 in. (10 mm) Flexible Metal Conduit
Mechanical Connections	**Round Shafts**	Range of Sizes: 5/16 to 5/8 in. (8 to 16 mm)
	Square Shafts	Range of Sizes: 1/4 to 1/2 in. (6 to 12 mm)

The performance specifications are nominal and conform to acceptable industry standards. For applications at conditions beyond these specifications, consult the local Johnson Controls office. Johnson Controls shall not be liable for damages resulting from misapplication or misuse of its products. © 2017 Johnson Controls

M9208-xxx-x Series Electric Spring-Return Actuators (Continued)

M9208-Bxx-3 Series On/Off Electric Spring-Return Actuators (Part 2 of 2)		
Ambient Conditions	**Extended Operating**	-40 to -4°F (-40 to -20°C); 90% RH Maximum, Noncondensing
	Storage	-40 to 185°F (-40 to 85°C); 95% RH Maximum, Noncondensing
Dimensions		6.33 x 3.90 x 2.26 in. (160.7 x 99 x 57.5 mm)
Compliance	**United States**	UL Listed, CCN XAPX, File E27734; to UL 60730-1A: 2003-08, Ed. 3.1, Automatic Electrical Controls for Household and Similar Use; and UL 60730-2-14: 2002-02, Ed. 1, Part 2, Particular Requirements for Electric Actuators. (Models: All)
	Canada	UL Listed, CCN XAPX7, File E27734; to UL 60730-1:02-CAN/CSA: July 2002, 3rd Ed., Automatic Electrical Controls for Household and Similar Use; and CSA C22.2 No. 24-93 Temperature Indicating and Regulating Equipment (Models: All).
CE	**Europe**	CE Mark – Johnson Controls declares that this product is in compliance with the essential requirements and other relevant provisions of the EMC Directive and Low Voltage Directive.
	Australia and New Zealand	RCM Mark, Australia/NZ Emissions Compliant (Models: All)
Shipping Weight		Models: -BGC: 3.75 lb (1.7 kg) Models: -BAC and -BDC: 4.15 lb (1.9 kg)

The performance specifications are nominal and conform to acceptable industry standards. For applications at conditions beyond these specifications, consult the local Johnson Controls office. Johnson Controls shall not be liable for damages resulting from misapplication or misuse of its products. © 2017 Johnson Controls

Code No. LIT-1900358
Issued October 2017

M9220 Series Electric Spring-Return Actuators

Description

The M9220-xxx-3 actuators are direct-mount, spring-return electric actuators that operate with these available power options:

- AC 24 V at 50/60 Hz or DC 24 V (AGx, BGx, GGx, HGx)
- AC 120 V at 60 Hz (BAx)
- AC 230 V at 50/60 Hz (BDx)

These bidirectional actuators do not require a damper linkage, and are easily installed on dampers with 1/2 to 3/4 in. or 12 to 19 mm round shafts, or 3/8 and 1/2 in. or 10, 12, and 14 mm square shafts using the standard shaft clamp included with the actuator. An optional M9220-600 Jackshaft Coupler Kit is available for 3/4 to 1-1/16 in. or 19 to 27 mm round shafts, or 5/8 and 3/4 in. or 16, 18, and 19 mm square shafts.

A single M9220-xxx-3 Electric Spring-Return Actuator provides a running and spring-return torque of 177 lb·in (20 N·m). Two or three models mounted in tandem deliver twice or triple the torque. Integral line voltage auxiliary switches are available on the -xxC models to indicate end-stop position or to perform switching functions within the selected rotation range.

Refer to the *M9220-xxx-3 Electric Spring-Return Actuators Product Bulletin (LIT-12011057)* for important product application information and single point of contact information.

Features

- Available torques of 177 lb·in (20 N·m) for single actuators, 354 lb·in (40 N·m) for two models, and 531 lb·in (60 N·m) for three models mounted in tandem—offer a selection that is most suitable for the application.
- Reversible mounting design—simplifies installation and enables the actuator to spring return in either direction.
- Electronic stall detection throughout entire rotation range—extends the life of the actuator by deactivating the actuator motor when an overload condition is detected.
- Removable coupler—adapts to a shorter damper shaft.
- Integral 48 in. (1.2 m) halogen-free cables with colored and numbered conductors—simplify field wiring.
- Integral auxiliary switches (xxC Models)—provide one fixed and one adjustable switch point with line voltage capability.
- NEMA 2 (IP54) rated aluminum enclosure—protects the internal components of the actuator from dirt and moisture.
- Easy-to-use locking manual override with auto release and crank storage—allows for manual positioning of the actuator hub.
- Integral connectors for 3/8 in. flexible metal conduit—simplify installation and field wiring.
- Microprocessor-controlled brushless DC motor (-AGx, -GGx, and -HGx types)—provides constant run-time independent of torque.

M9220 Series Electric Spring-Return Actuator



Applications

The M9220-xxx-3 Electric Spring-Return Actuators provide reliable control of dampers and valves in HVAC systems. The M9220-xxx-3 Actuators are available for use with on/off, floating, and proportional controllers.

Repair Information

If the M9220 Series Electric Actuator fails to operate within its specifications, replace the unit. For a replacement actuator, contact the nearest Johnson Controls® representative.

Selection Chart

Code Number	Control Type	Auxiliary Switches	Power Requirements
M9220-AGA-3	Floating	None	AC 24 V at 50/60 Hz or DC 24 V
M9220-AGC-3	Floating	Two	AC 24 V at 50/60 Hz or DC 24 V
M9220-BAA-3	On/Off	None	AC 120 V at 60 Hz
M9220-BAC-3	On/Off	Two	AC 120 V at 60 Hz
M9220-BDA-3	On/Off	None	AC 230 V at 50/60 Hz
M9220-BDC-3	On/Off	Two	AC 230 V at 50/60 Hz
M9220-BGA-3	On/Off	None	AC 24 V at 50/60 Hz or DC 24 V
M9220-BGC-3	On/Off	Two	AC 24 V at 50/60 Hz or DC 24 V
M9220-GGA-3	Proportional	None	AC 24 V at 50/60 Hz or DC 24 V
M9220-GGC-3	Proportional	Two	AC 24 V at 50/60 Hz or DC 24 V
M9220-HGA-3	Proportional with Adjustable Zero and Span	None	AC 24 V at 50/60 Hz or DC 24 V
M9220-HGC-3	Proportional with Adjustable Zero and Span	Two	AC 24 V at 50/60 Hz or DC 24 V

GENERATOR: CAD, EAD, OAD DAMPER ACTUATOR
HRV-1: OA DAMPER ACTUATOR
CF-1 HEATING COIL VALVE ACT

The performance specifications are nominal and conform to acceptable industry standards. For applications at conditions beyond these specifications, consult the local Johnson Controls office. Johnson Controls, Inc. shall not be liable for damages resulting from misapplication or misuse of its products. © 2017 Johnson Controls

M9220 Series Electric Spring-Return Actuators (Continued)

Accessories

Code Number	Description
DMPR-KC003	7 in. (178 mm) blade pin extension (without bracket) for Johnson Controls direct-mount damper applications (quantity 5) **Note:** Available with damper and may be ordered separately
M9000-153	Crankarm (quantity 1)
M9000-158	Tandem Mounting Kit used to mount two models of M9220-xxx-3 Series Proportional Electric Spring-Return Actuators (quantity 1)
M9000-170	Remote Mounting Kit, horizontal. Kit includes mounting bracket, M9000-153 crankarm, ball joint, and mounting bolts (quantity 1)
M9000-171	Remote Mounting Kit, Vertical. Kit Includes mounting bracket, M9000-153 crankarm, ball joint, and mounting bolts (quantity 1)
M9000-320	Weather Shield Enclosure - NEMA 3R enclosure for protecting a single M9210/20 Actuator from rain, sleet, or snow (quantity 1)
M9000-400	Jackshaft Linkage Kit. Open-ended design enables clamping onto a jackshaft without requiring access to the ends of the jackshaft (quantity 1)
M9000-519	Valve linkage for mounting M9220 actuator to 2-1/2 to 6 in. flanged ball valves
M9000-604	Replacement Anti-Rotation Bracket Kit (with Screws) for M9220-xxx-3 Series Proportional Electric Spring-Return Actuators (quantity 1)
M9200-100	Threaded Conduit Adapter, 1/2 NPSM, for M9210(20) and M(VA)9208 Series Actuators (quantity 5)
M9220-600	1 in. (25 mm) Jackshaft Coupler Kit (with locking clip) for mounting M9220-xxx-3 Proportional Electric Spring-Return Actuators on dampers with 3/4 to 1-1/16 in. or 19 to 27 mm round shafts, or 5/8 and 3/4 in. or 16, 18, and 19 mm square shafts (quantity 1)
M9220-601	Replacement Coupler Kit (with locking clip) for mounting M9220-xxx-3 Proportional Electric Spring-Return Actuators on dampers with 1/2 to 3/4 in. or 12 to 19 mm round shafts, or 3/8 and 1/2 in. or 10, 12, and 14 mm square shafts (quantity 1)
M9220-602	Replacement Locking Clips for M9220-xxx-3 Proportional Electric Spring-Return Actuators (five per bag)
M9220-603	Adjustable Stop Kit for M9220-xxx-3 Proportional Electric Spring-Return Actuators (quantity 1)
M9220-604	Replacement Manual Override Cranks for M9220-xxx-3 Proportional Electric Spring-Return Actuators (five per bag)
M9220-610	Replacement Shaft Gripper, 10 mm square shaft with locking clip (quantity 1)
M9220-612	Replacement Shaft Gripper, 12 mm square shaft with locking clip (quantity 1)
M9220-614	Replacement Shaft Gripper, 14 mm square shaft with locking clip (quantity 1)

The performance specifications are nominal and conform to acceptable industry standards. For applications at conditions beyond these specifications, consult the local Johnson Controls office. Johnson Controls, Inc. shall not be liable for damages resulting from misapplication or misuse of its products. © 2017 Johnson Controls

M9220 Series Electric Spring-Return Actuators (Continued)

Dimensions

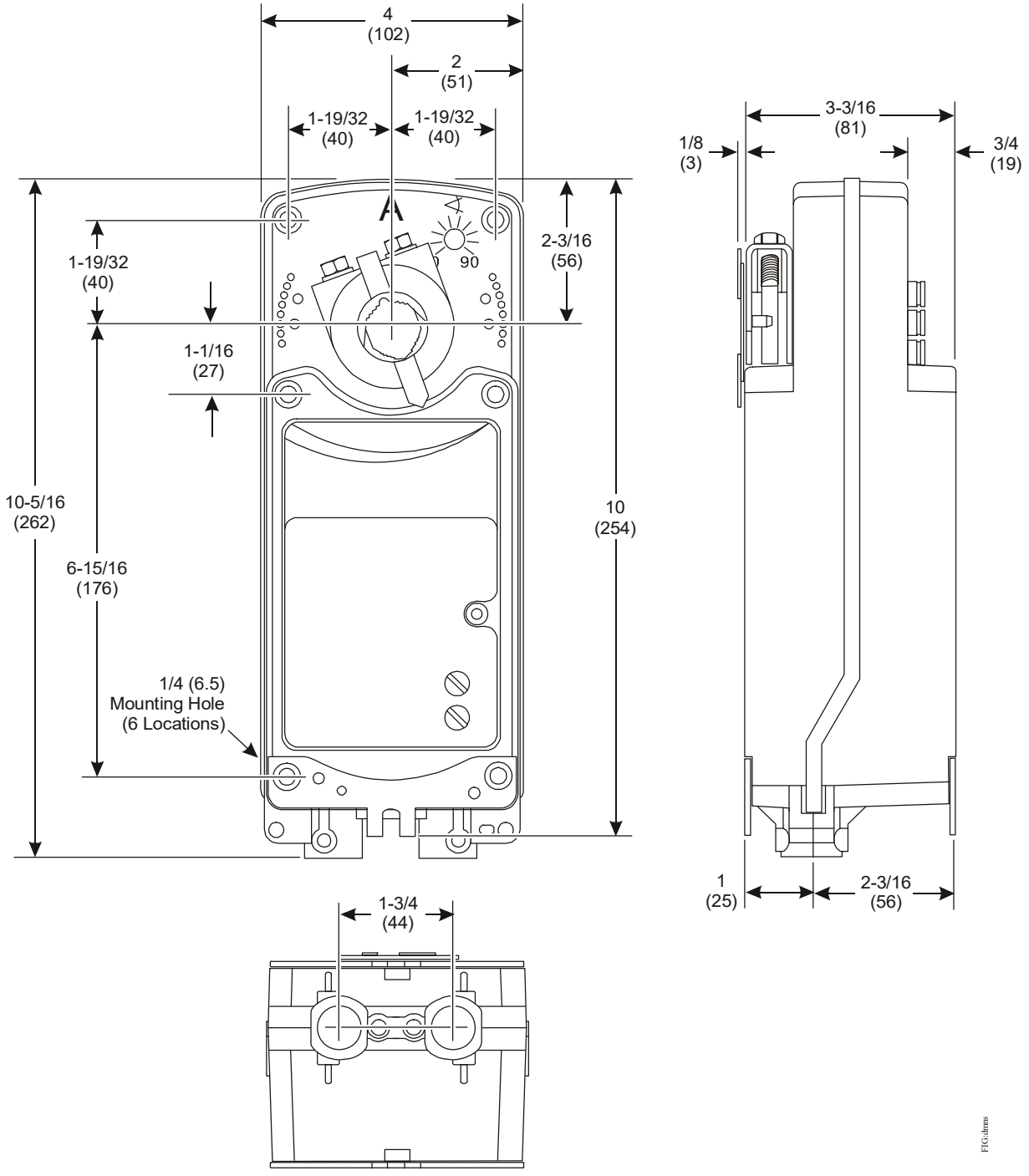

M9220-xxx-3 Electric Spring-Return Actuator Dimensions, in. (mm)

The performance specifications are nominal and conform to acceptable industry standards. For applications at conditions beyond these specifications, consult the local Johnson Controls office. Johnson Controls, Inc. shall not be liable for damages resulting from misapplication or misuse of its products. © 2017 Johnson Controls

M9220 Series Electric Spring-Return Actuators (Continued)

Technical Specifications

M9220 Series Electric Spring-Return Actuators (Part 1 of 2)		
Product Codes		M9220-AGx-3 Models: Floating M9220-Bxx-3 Models: On/Off M9220-GGx-3 Models: Proportional M9220-HGx-3 Models: Proportional Adjustable
Power Requirements	**AGx, HGx, GGx Models**	AC 24 V (19.2 to 30 V) at 50/60 Hz: Class 2, 15.5 VA running, 7.7 VA holding position; DC 24 V (21.6 to 26.4 V): Class 2, 6.7 W running, 2.9 W holding position
	BAx Models	AC 120 V (AC 102 to 132 V) at 60 Hz: 0.25 A running, 0.13 A holding position
	BDx Models	AC 230 V (AC 198 to 264 V) at 50/60 Hz: 0.15 A running, 0.09 A holding position
	BGx Models	AC 24 V (19.2 to 30 V) at 50/60 Hz: Class 2, 24.6 VA running, 7.7 VA holding position; DC 24 V (21.6 to 26.4 V): Class 2, 17.6 W running, 2.8 W holding position
Transformer Sizing Requirements	**AGx, HGx, GGx Models**	20 VA minimum per actuator
	Bxx Models	25 VA minimum per actuator
Input Signal/Adjustments	**AGx Models**	DC 0 (2) to 10 V or 0 (4) to 20 mA with field furnished 500 Ohm resistor; Switch selectable direct or reverse action with signal increase, 500 ms minimum pulse width
	GGx Models	Factory set DC 0 to 10 V, CW Rotation with signal increase; Selectable DC 0 (2) to 10 V or 0 (4) to 20 mA with field furnished 500 Ohm, 0.25 W minimum resistor; switch selectable direct or reverse action with signal increase
	HGx Models	Factory set DC 0 to 10 V, CW rotation with signal increase; Selectable DC 0 to 10 V or 0 to 20 mA with field furnished 500 Ohm, 0.25 W minimum resistor; Start point programmable DC 0 to 10 V; Span programmable DC 2 to 10 V; Switch selectable direct or reverse action with signal increase
Control Input Impedance	**GGx, HGx Models**	Voltage Input: 200,000 Ohms; Current Input: 500 Ohms with field furnished 500 Ohm resistor
Feedback Signal	**GGx Models**	0 (2) to 10 VDC for desired rotation range up to 90°; Corresponds to rotation limits, 1 mA maximum
	HGx Models	0 to 10 VDC for desired rotation range up to 90°; Corresponds to rotation limits, 1 mA maximum
Auxiliary Switch Rating	**xxC Models**	Two Single-Pole, Double-Throw (SPDT), double-insulated switches with gold flash contacts: AC 24 V, 50 VA Pilot Duty; AC 120 V, 5.8 A resistive, 1/4 hp, 275 VA Pilot Duty; AC 240 V, 5.0 A resistive, 1/4 hp, 275 VA Pilot Duty
Spring Return		Direction is selectable with mounting position of actuator: Side A, actuator face away from Damper for CCW spring return; Side B, actuator face away from Damper for CW spring return
Running and Spring Return Torque		177 lb·in (20 N·m) for a single actuator; 354 lb·in (40 N·m) for two models mounted in tandem 531 lb·in (60 N·m) for three models mounted in tandem
Valid Tandem Combinations		Two M9220-Bxx-3 Three M9220-AGx-3 One M9220-HGx-3 master with one or two M9220-GGX-3 slaves One M9220-GGx-3 master with one or two M9220-GGX-3 slaves
Rotation Range		Adjustable from 30 to 90° CW or CCW with optional M9220-603 Adjustable Stop Kit; mechanically limited to 90°
Rotation Time Power On (Running)	**AGx, HGx, GGx Models**	150 seconds for 0 to 177 lb·in (0 to 20 N·m) at all operating conditions; independent of load
	BGx Models	24 to 57 seconds for 0 to 177 lb·in (0 to 20 N·m) at all operating conditions; 35 seconds nominal at full rated load
Rotation Time Power Off (Spring Returning)	**AGx, HGx, GGx Models**	20 seconds for 0 to 177 lb·in (0 to 20 N·m) at room temperature
	BGx Models	11 to 15 seconds for 0 to 177 lb·in (0 to 20 N·m) at room temperature; 35 seconds maximum for 0 to 177 lb·in (0 to 20 N·m) at -22°F (-30°C) 130 seconds maximum for 0 to 177 lb·in (0 to 20 N·m) at -40°F (-40°C)
Cycles		60,000 full stroke cycles; 1,500,000 repositions
Audible Noise Rating (AGx, HGx, GGx Models)	**Power On (Running)**	< 40 dBA at 39-13/32 in. (1 m)
	Power On (Holding)	< 20 dBA at 39-13/32 in. (1 m)
	Power Off (Spring Returning)	< 55 dBA at 39-13/32 in. (1 m)

The performance specifications are nominal and conform to acceptable industry standards. For applications at conditions beyond these specifications, consult the local Johnson Controls office. Johnson Controls, Inc. shall not be liable for damages resulting from misapplication or misuse of its products. © 2017 Johnson Controls

M9220 Series Electric Spring-Return Actuators (Continued)

M9220 Series Electric Spring-Return Actuators (Part 2 of 2)		
Audible Noise Rating (BGx Models)	**Power On (Running)**	< 66 dBA at 39-13/32 in. (1 m)
	Power On (Holding)	< 18 dBA at 39-13/32 in. (1 m)
	Power Off (Spring Returning)	< 66 dBA at 39-13/32 in. (1 m)
Electrical Connections	**Actuator (All Models)**	48 in. (1.2 m) halogen-free cable with 18 AWG (0.75 mm^2) wire leads
	Auxiliary Switches (xxC Models)	48 in. (1.2 m) halogen-free cable with 18 AWG (0.75 mm^2) wire leads
Conduit Connections		Integral connectors for 3/8 in. (10 mm) flexible metal conduit
Mechanical Connections	**Standard Shaft Clamp Included with Actuator**	1/2 to 3/4 in. or 12 to 19 mm diameter round shafts, or 3/8 and 1/2 in. or 10, 12, and 14 mm square shafts
	Optional M9220-600 Jackshaft Coupler Kit	3/4 to 1-1/16 in. or 19 to 27 mm diameter round shafts, or 5/8 and 3/4 in. or 16, 18, and 19 mm square shafts
Aluminum Enclosure		NEMA 2 (IP54) for all mounting orientations
Ambient Conditions	**Operating**	-40 to 131°F (-40 to 55°C); 90% RH maximum, noncondensing
	Storage	-85 to 185°F (-65 to 85°C); 95% RH maximum, noncondensing
Dimensions		See *Dimensions*.
Compliance	**United States**	UL Listed, CCN XAPX, File E27734; to UL 60730-1, Automatic Controls for Household and Similar Use and UL 60730-2-14 Part 2, Particular Requirements for Electric Actuators (Models: All)
	Canada	UL Listed, CCN XAPX7,File E27734; to CAN/CSA E60730-1, Automatic Controls for Household and Similar Use: and CAN/CSA E60730-2-14 Part 2, Particular Requirements for Electric Actuators (Models: All)
CE	**Europe**	CE Mark - Johnson Controls declares that this product is in compliance with the essential requirements and other relevant provisions of the EMC Directive and Low Voltage Directive.
	Australia and New Zealand	RCM Mark, Australia/NZ Emission Compliant (Models: All M9220-xGx and M9220-xDx)
Shipping Weight	**xGx Models**	6.4 lb (2.9 kg)
	BAx and BDx Models	7.6 lb (3.5 kg)

The performance specifications are nominal and conform to acceptable industry standards. For applications at conditions beyond these specifications, consult the local Johnson Controls office. Johnson Controls, Inc. shall not be liable for damages resulting from misapplication or misuse of its products. © 2017 Johnson Controls

FEC-1611:DOM HOT WATER, HEAT EXCHANGER HEX3.1, MISC SYSTEM
FEC-2611: WATER SUP RECIRC. SYSTEM, FUEL OIL, GENERATOR, AHU-2, HWS, CF-1, CF-2, HRV-1, UH-2.8

Field Equipment Controller (FEC) Series Catalog Page

Code No. LIT-1900346
Issued June 2018

Refer to the QuickLIT website for the most up-to-date version of this document.

The Field Equipment Controller (FEC) Series products are programmable controllers that can be switched between BACnet® MS/TP and N2 communications protocols. When they are used as BACnet MS/TP devices, they are BACnet Application Specific Controllers (B-ASCs) with integral MS/TP communications. In N2 mode, they can be used to modernize sites with legacy Johnson Controls® controllers.

FECs feature 32-bit microprocessor architecture, patented continuous tuning adaptive control, and peer-to-peer communications, and are available with an optional built-in LCD screen local UI.

A full range of FEC models combined with the Input/Output Module (IOM) models can be applied to a wide variety of building applications ranging from simple fan coil or heat pump control to advanced central plant management. All FEC Series Controllers configured for BACnet support wireless communications using the ZFR System accessories.

Important:	You cannot purchase a similar third-party device and install it in a UL/cUL Listed smoke control system. Doing so voids the UL/cUL Smoke Control Listing. Third-party devices must be provided and labeled by the factory as described in the UL/cUL Smoke Control Listing.

Important:	Only those Johnson Controls products identified for use in smoke control applications have been tested and listed by UL for use in a *Metasys* system UL/cUL 864 10th Edition UUKL/ORD-C100-13 UUKLC Smoke Control System. Installation of a product that is not UL/cUL Listed and labeled for this application prevents the entire system from being UL/cUL Listed for smoke control.

Refer to the *Metasys® System Field Equipment Controllers and Related Products Product Bulletin (LIT-12011042)* for product application details.

If the product fails to operate within its specifications, replace the product. For a replacement product, contact the nearest Johnson Controls® representative.

Features

- **Switchable Communications Protocols**—Provides flexibility with a choice between BACnet MS/TP and N2 communication
- **Standard BACnet® Protocol**—Provides interoperability with other Building Automation System (BAS) products that use the widely accepted BACnet standard.
- **Standard Hardware and Software Platform**—Uses a common hardware design throughout the family line to support standardized wiring practices and installation workflows. Also uses a common software design to support use of a single tool for control applications, commissioning, and troubleshooting to minimize technical training.
- **ZFR Wireless Field Controller (FC) or Sensor/Actuator (SA) Bus Interface**—Provides a wireless alternative to hard-wired *Metasys*® system counterparts with either the ZFR1800 Series Wireless Bus or the WNC1800/ZFR182x Pro Series Wireless Field Bus (ZFR Pro), offering application flexibility and mobility with minimal disruption to building occupants.

Figure 1: Field Equipment Controllers



- **Bluetooth® Wireless Commissioning**—Provides an easy-to-use connection to the configuration and commissioning tool.
- **Auto-Tuned Control Loops**—Reduce commissioning time, eliminate change-of-season re-commissioning, and reduce wear and tear on mechanical devices.
- **Universal Inputs, Configurable Outputs, and Point Expansion Modules**—Allows multiple signal options to provide input/output flexibility.
- **Optional Local User Interface Display** —Allows convenient monitoring and adjusting capabilities at the local device.
- **BACnet® Testing Laboratories (BTL) Listed**—Ensures interoperability with other BTL-listed devices. BTL is a third-party agency, which validates that BAS vendor products meet the BACnet industry-standard protocol.
- **32-bit Microprocessor**—Ensures optimum performance and meets industry specifications.
- **BACnet Automatic Discovery**—Supports easy controller integration into a *Metasys* BAS.
- **End-of-Line (EOL) Switch in MS/TP Field Controllers** — Enables field controllers to be terminating devices on the communications bus.
- **Pluggable Communications Bus and Supply Power Terminal Blocks**—Expedites installation and troubleshooting.
- **Patented proportional adaptive control (P-Adaptive) and Pattern Recognition Adaptive Control (PRAC) technologies**—Provide continuous loop tuning.
- **Wireless Connectivity through the ZFR1800 Series or the WNC1800/ZFR182x Pro Series Wireless Field Bus Systems in MS/TP Controllers**—Enables wireless mesh connectivity to supervisory controllers, facilitating easy initial location and relocation.
- **Writable Flash Memory**—Allows standard or customized applications to be downloaded from the Controller Configuration Tool (CCT) and enables persistent application data.
- **Large Product Family**—Provides a wide range of point mix to meet application requirements and allows for the addition of one or more Input/Output Module (IOM) and Network Sensors to provide even more I/O capacity.
- **User-Friendly Graphic Theme and Clear Pushbutton Identification**—Facilitate easy navigation of the integral or optional UI/display.

Table 1: FEC Series Model Information (Including Point Type Counts)

		FEC2511[1]	FEC16	FEC26
Communication Protocol		BACnet MS/TP, N2		
Engines		All Model types. Some NIE models support MS/TP and N2 devices. Refer to the *Network Engines Product Bulletin (LIT-12012138)* for details.		
Modular Jacks		6-pin SA Bus Modular Port supports one communicating sensor. **Or** you can wire up to four communicating sensors to the SA Bus Terminal Block. They cannot be used at the same time.		
			6-pin FC Bus for tool support	
Point Types	**Signals Accepted**			
Universal Input (UI)	Analog Input, Voltage Mode, 0–10 VDC Analog Input, Current Mode, 4–20 mA[2] Analog Input, Resistive Mode, 0–2k ohm, resistance temperature detector (RTD) (1k NI [Johnson Controls], 1k PT, A99B SI), negative temperature coefficient (NTC) (10k Type L, 2.252k Type 2) Binary Input, Dry Contact Maintained Mode	4 (Does not support Current Mode)	2	6
Binary Input (BI)	Dry Contact Maintained Mode Pulse Counter/Accumulator Mode (High Speed), 100 Hz	6	1	2
Analog Output (AO)	Analog Output, Voltage Mode, 0–10 VDC Analog Output, Current Mode, 4–20 mA	2 (Does not support Current Mode)		2
Binary Output (BO)	24 VAC Triac	2 (External Power Only)	3	3
Configurable Output (CO)	Analog Output, Voltage Mode, 0–10 VDC Binary Output Mode, 24 VAC Triac	2	4	4

1 The FEC2511 is currently only available in Europe. Contact your local Johnson Controls representative for more information.
2 Analog Input, Current Mode is set by hardware for the FEC26, and by software for the FEC16.

Table 2: FEC Series Ordering Information

Product Code Number	Description
MS-FEC1611-1	10-Point Field Equipment Controller with 2 UI, 1 BI, 3 BO, and 4 CO; 24 VAC; FC and SA Bus Support
MS-FEC1611-1ET	10-Point Field Equipment Controller Extended Temperature controller for rooftop applications. Supports Operational Temperature Range of -40 to 70°C (-40 to 158°F).
MS-FEC1621-1	10-Point Field Equipment Controller with 2 UI, 1 BI, 3 BO, and 4 CO; 24 VAC; FC and SA Bus Support; Integral Display and 6-Button Navigation Touchpad
MS-FEC2511-0[1]	16-Point Field Equipment Controller with 4 UI, 6 BI, 2 AO, 2 BO, and 2 CO; 24 VAC; FC and SA Bus Support. The FEC2511 model does not support current mode.
MS-FEC2611-0	17-Point Field Equipment Controller with 6 UI, 2 BI, 3 BO, 2 AO, and 4 CO; 24 VAC; FC and SA Bus Support
MS-FEC2611-0ET	FEC2611 Extended Temperature controller for rooftop applications. Supports Operational Temperature Range of -40 to 70°C (-40 to 158°F).
MS-FEC2621-0	17-Point Field Equipment Controller with 6 UI, 2 BI, 3 BO, 2 AO, and 4 CO; 24 VAC; FC and SA Bus Support; Integral Display and 6-Button Navigation Touchpad

1 This model is currently only available in Europe. Contact your local Johnson Controls representative for more information.

Table 3: FEC Series for Smoke Control Ordering Information

Product Code Number[1,2]	Description
MS-FEC1611-1U	10-Point Field Equipment Controller with 2 UI, 1 BI, 3 BO, and 4 CO; 24 VAC, FC and SA Bus, with Mounting Base
MS-FEU1610-0U	10-Point Field Equipment Controller with 2 UI, 1 BI, 3 BO, and 4 CO; 24 VAC; FC and SA Bus Support; with Mounting Base
MS-FEC2611-0U	17-Point Field Equipment Controller with 6 UI, 2 BI, 3 BO, 2 AO, and 4 CO; 24 VAC, FC and SA Bus, with Mounting Base

Table 3: FEC Series for Smoke Control Ordering Information

Product Code Number[1,2]	Description
MS-FEC2621-0U	17-Point Field Equipment Controller with 6 UI, 2 BI, 3 BO, 2 AO, and 4 CO; 24 VAC; FC and SA Bus Support; Integral Display and 6-Button Navigation Touchpad
MS-FEU2610-0U	17-Point Field Equipment Controller with 6 UI, 2 BI, 3 BO, 2 AO, and 4 CO; 24 VAC; FC and SA Bus Support; with Mounting Base

1 These devices are UL/ULC 864 Listed, File S4977, 10th Edition UUKL/ORD-C100-13 UUKLC Smoke Control System. These devices must be ordered in a Smoke Control UUKL listing.

2 All field controllers in a smoke control system must be mounted in Johnson Controls custom or standard UL 864 panels or in panels that are ordered from Johnson Controls. If these field controllers are used with panels that are not supplied by Johnson Controls, they are not compliant with the UL 864 10th Edition UUKL/ORD-C100-13 UUKLC Smoke Control System listing.

Accessories

Table 4: FEC Accessories

Product Code Number	Description
Mobile Access portal (MAP) Gateway[1]	Refer to the *Mobile Access Portal Gateway Catalog Page (LIT-1900869)* to identify the appropriate product for your region.
MS-DIS1710-0	Local Controller Display: Refer to *Local Controller Display Product Bulletin (LIT-12011273)* for more information.
MS-BTCVT-1[1]	Wireless Commissioning Converter with Bluetooth Technology
MS-BTCVTCBL-700[1]	Cable Replacement Set for the MS-BTCVT-1 or the NS-ATV7003-0; Includes One 5 ft (1.5 m) Retractable Cable
WRZ Series Wireless Room Sensors[1]	Refer to the *WRZ Series Wireless Room Sensors Product Bulletin (LIT-12011653)* for specific sensor model descriptions.
ZFR1800 Series Wireless Field Bus System[1]	This system is used for installations that only support BACnet MS/TP. Refer to the *WNC1800/ZFR182x Pro Series Wireless Field Bus System Product Bulletin (LIT-12012320)* for a list of available products.
NS Series Network Sensors	Refer to the *NS Series Network Sensors Product Bulletin (LIT-12011574)* for specific sensor model descriptions.
Y64T15-0[1]	Transformer, 120/208/240 VAC Primary to 24 VAC Secondary, 92 VA, Foot Mount, 30 in. Primary Leads and 30 in. Secondary Leads, Class 2
Y65A13-0[1]	Transformer, 120 VAC Primary to 24 VAC Secondary, 40 VA, Foot Mount (Y65AS), 8 in. Primary Leads and 30 in. Secondary Leads, Class 2
Y65T42-0	Transformer, 120/208/240 VAC Primary to 24 VAC Secondary, 40 VA, Hub Mount (Y65SP+), 8 in. Primary Leads and Secondary Screw Terminals, Class 2
Y65T31-0[1]	Transformer, 120/208/240 VAC Primary to 24 VAC Secondary, 40 VA, Foot Mount (Y65AR+), 8 in. Primary Leads and Secondary Screw Terminals, Class 2
AP-TBK4SA-0	Replacement MS/TP SA Bus Terminal, 4-Position Connector, Brown (Bulk Pack of 10)
AP-TBK4FC-0	Replacement MS/TP FC Bus Terminal, 4-Position Connector (Bulk Pack of 10)
AP-TBK3PW-0	Replacement Power Terminal, 3-Position Connector, Gray (Bulk Pack of 10)
AS-CBLTSTAT-0	Cable adapter that provides a connection between 8-pin TE-6700 Series sensors and field controllers that do not have a 8-pin sensor connection.
ZFR-USBHA-0[1]	ZFR USB Dongle provides a wireless connection through CCT to allow wireless commissioning of the wirelessly enabled FEC, Advanced Application Field Equipment Controller (FAC), IOM, and VMA16 controllers. Also allows use of the ZFR Checkout Tool (ZCT) in CCT. **Note:** The ZFR-USBHA-0 replaces the IA OEM DAUBI_2400 ZigBee® USB dongle. For additional information on the ZFR-USBHA-0 ZigBee dongle, refer to the *ZFR1800 Series Wireless Field Bus System Technical Bulletin (LIT-12011295)* or *ZFR1800 Series Wireless Field Bus System Quick Reference Guide (LIT-12011630)*.
TL-BRTRP-0[1]	Portable BACnet IP to MS/TP Router

1 This accessory is not qualified for use with a UL 864 UUKL/UUKLC 10th Edition Listed Smoke Control system.

Table 5: FEC Series Technical Specifications

Product Code Numbers	**MS-FEC1611-1:**10-Point FEC **MS-FEC1611-1ET:** FEC1611 Extended Temperature controller for rooftop applications. Supports Operational Temperature Range of -40 to 70°C (-40 to 158°F). **MS-FEC1621-1:** 10-Point FEC with Integral Display and Pushbutton User Interface **MS-FEC2511-0**[1]**:** 16-Point FEC, only available in Europe **MS-FEC2611-0:** 17-Point FEC **MS-FEC2611-0ET:** FEC2611 Extended Temperature controller for rooftop applications. Supports Operational Temperature Range of -40 to 70°C (-40 to 158°F). **MS-FEC2621-0:** 17-Point FEC with Integral Display and Push Button User Interface
	Smoke Control Models: **MS-FEC1611-0U:** 10-Point FEC **MS-FEU1610-0U:** 10-Point FEC **MS-FEC2611-0U:** 17-Point FEC **MS-FEU2610-0U:** 17-Point FEC
Supply Voltage	**MS-FEC1611-x, MS-FEC1611-1ET, MS-FEC2511-0**[1]**, MS-FEC2611-0, MS-FEC2611-0ET, MS-FECx611-0U, and MS-FEUx610-0U:** 24 VAC (nominal, 20 VAC minimum/30 VAC maximum), 50/60 Hz, Power Supply Class 2 (North America), Safety, Extra-Low Voltage (SELV) (Europe)
Power Consumption	**MS-FEC2511-0**[1] **:** 14 VA maximum (no integral display) **MS-FEC1621-1 and MS-FEC2621-0 (with integral display):** 20VA maximum **Note:** VA ratings do not include any power supplied to the peripheral devices connected to Binary Outputs (BOs) or Configurable Outputs (COs), which can consume up to 12 VA for each BO or CO, for a possible total consumption of an additional 84 VA (maximum).
Ambient Conditions	**Operating:** 0 to 50°C (32 to 122°F); 10 to 90% RH noncondensing **Storage:** -40 to 80°C (-40 to 176°F); 5 to 95% RH noncondensing **Note:** FEC models with an -xET suffix have an operating temperature range of -40 to 70°C (-40 to 158°F).
Controller Addressing	**For BACnet-configured controllers:** DIP switch set; valid field controller device addresses 4–127 (device addresses 0–3 and 128-255 are reserved) **For N2-configured controllers:** DIP switch set; valid control device addresses 1–255
Communications Bus[2]	RS-485, field selectable between BACnet MS/TP and N2 communications: 3-wire FC Bus between the supervisory controller and field controllers 4-wire SA Bus between field controller, network sensors, and other sensor/actuator devices, includes a lead to source 15 VDC supply power (from field controller) to bus devices
Processor	**MS-FEC16, MS-FEC26, MS-FEU16, and MS-FEU26 models:** H8SX/166xR Renesas® 32-bit microcontroller **MS-FEC2511-0**[1]**:** RX631 Renesas, 32-bit microcontroller
Memory	**MS-FEC16, MS-FEC26, MS-FEU16, and MS-FEU26 models:** 1 MB Flash Memory and 512 KB RAM **MS-FEC2511-0**[1]**:** 4 MB Flash Memory and 8 MB SDRAM

Table 5: FEC Series Technical Specifications

Input and Output Capabilities	**MS-FEC16 Models:** 2 - Universal Inputs: Defined as 0–10 VDC, 4–20 mA, 0–600k ohm, or Binary Dry Contact 1 - Binary Inputs: Defined as Dry Contact Maintained or Pulse Counter/Accumulator Mode 3 - Binary Outputs: Defined as 24 VAC Triac (selectable internal or external source power) 4 - Configurable Outputs: Defined as 0–10 VDC or 24 VAC Triac BO **MS-FEC2511-0[1] Models:** 4 - Universal Inputs: Defined as 0–10 VDC, 0–600k ohm, or Binary Dry Contact 6 - Binary Inputs: Defined as Dry Contact Maintained or Pulse Counter/Accumulator Mode 2 - Binary Outputs: Does not have internal 24 VAC source, external power is required 2 - Configurable Outputs: Defined as 0–10 VDC or 24 VAC Triac BO 2 - Analog Outputs: Defined as 0–10 VDC **MS-FEC26 Models:** 6 - Universal Inputs: Defined as 0–10 VDC, 4–20 mA, 0–600k ohm, or Binary Dry Contact 2 - Binary Inputs: Defined as Dry Contact Maintained or Pulse Counter/Accumulator Mode 3 - Binary Outputs: Defined as 24 VAC Triac (selectable internal or external source power) 4 - Configurable Outputs: Defined as 0–10 VDC or 24 VAC Triac BO 2 - Analog Outputs: Defined as 0–10 VDC or 4–20 mA
Analog Input/Analog Output Resolution and Accuracy	**MS-FEC16, MS-FEC26, MS-FEU16, and MS-FEU26 models:** Analog Input: 16-bit resolution Analog Output: 16-bit resolution and ±200 mV in 0–10 VDC applications **MS-FEC2511-0[1]:** Analog Input: 15-bit resolution
Terminations	**MS-FEC16 and MS-FEC26 models:** Input/Output: Fixed Screw Terminal Blocks FC Bus, SA Bus, and Supply Power: 3-wire and 4-wire Pluggable Screw Terminal Blocks FC Bus and SA Bus Port: RJ-12 6-pin Modular Jacks **MS-FEC2511-0[1]:** Input/Output: Fixed Screw Terminal Blocks FC Bus, SA Bus, and Supply Power: 3-wire and 4-wire Pluggable Screw Terminal Blocks SA Bus Port: RJ-12 6-pin Modular Jack
Mounting	Horizontal on single 35 mm DIN rail mount (preferred), or screw mount on flat surface with three integral mounting clips on controller
Housing	**MS-FEC16 and MS-FEC26 models:** Enclosure material: ABS and polycarbonate UL94 5VB; self-extinguishing; Plenum-rated protection class: IP20 (IEC529) **MS-FEC2511-0[1]:** Enclosure material: ABS and polycarbonate, Rating V0 minimum Protection Class: IP20 (IEC529)
Dimensions (Height x Width x Depth)	**MS-FEC16 Models:** 150 x 164 x 53 mm (5-7/8 x 6-7/16 x 2-1/8 in.) including terminals and mounting clips **MS-FEC2511-0[1]:** 150 x 164 x 48 mm (5-7/8 x 6-7/16 x 1-7/8 in.) including terminals and mounting clips **MS-FEC26 Models:** 150 x 190 x 53 mm (5-7/8 x 7-1/2 x 2-1/8 in.) including terminals and mounting clips **Note:** Mounting space for all field controllers requires an additional 50 mm (2 in.) space on top, bottom, and front face of controller for easy cover removal, ventilation, and wire terminations.
Weight	**MS-FEC16 Models:** 0.4 kg (0.9 lb) **MS-FEC25 and MS-FEC26 Models:** 0.5 kg (1.1 lb)

Table 5: FEC Series Technical Specifications

Compliance CE	**United States:** UL Listed, File E107041, CCN PAZX, UL 916, Energy Management Equipment; FCC Compliant to CFR47, Part 15, Subpart B, Class A UL Listed, File S4977, UL 864 UUKL/UUKLC 10th Edition Listed, Smoke Control Units and Accessories for Fire Alarm Systems Equipment (models with **U** product code suffix only)
	Canada: UL Listed, File E107041, CCN PAZX7, CAN/CSA C22.2 No. 205, Signal Equipment; Industry Canada Compliant, ICES-003 UL Listed, File S4977, UL 864 UUKL/ORD-C100-13 10th Edition Listed, Smoke Control Units and Accessories for Fire Alarm Systems (models with **U** product code suffix only)
	Europe: CE Mark – Johnson Controls declares that this product is in compliance with the essential requirements and other relevant provisions of the EMC Directive.
	Australia and New Zealand: RCM Mark, Australia/NZ Emissions Compliant
	BACnet International: **MS-FEC16 and MS-FEC26 Models:** BACnet Testing Laboratories (BTL) Protocol Revision 4 Listed BACnet Application Specific Controller (B-ASC) **MS-FEC2511-0**[1]**:** BACnet Testing Laboratories Protocol Revision 9 Listed BACnet Application Specific Controller (B-ASC)

1 MS-FEC2511-0 is currently only available in Europe. Contact your local Johnson Controls representative for more information.
2 For more information, refer to the *MS/TP Communications Bus Technical Bulletin (LIT-12011034)*.

The performance specifications are nominal and conform to acceptable industry standards. For application at conditions beyond these specifications, consult the local Johnson Controls office. Johnson Controls shall not be liable for damages resulting from misapplication or misuse of its products.

Building Technologies & Solutions
507 E. Michigan Street, Milwaukee, WI 53202

Metasys® and Johnson Controls® are registered trademarks of Johnson Controls.
All other marks herein are the marks of their respective owners.© 2018 Johnson Controls

Published in U.S.A.
www.johnsoncontrols.com

Input/Output Module (IOM) Series Controllers Catalog Page

Code No. LIT-1900349
Issued June 2018

Refer to the QuickLIT website for the most up-to-date version of this document.

The Input/Output Module (IOM) Series expansion I/O modules have integral RS-485 MS/TP communications and integrate into the web-based *Metasys*® system. IOMs can serve in one of two capacities, depending on where they are installed in the *Metasys* system. When installed on the Sensor/Actuator (SA) Bus of an Advanced Application Field Equipment Controller (FAC), Field Equipment Controller (FEC), or VAV Modular Assembly (VMA) controller, the IOM expands the point count of these controllers. When installed on the Field Controller (FC) Bus, IOMs can be used as I/O point multiplexors to support monitoring and control from an Network Automation Engine (NAE) or Network Control Engine (NCE). The point multiplexor can also be useful for sharing points between other field controllers on the FC Bus using peer-to-peer connectivity.

Note: At CCT Release 10.1 and later, FACs, FECs, and VMAs can communicate by using either the BACnet or the N2 field bus networking protocol. The operation of the IOM Input/Output Module is not affected by the selection of the BACnet or the N2 protocol in the host controller.

All IOM expansion modules are BACnet® Testing Laboratory (BTL) listed. Refer to the *IOM Series Technical Specifications Table* for details.

Important:	You cannot purchase a similar third-party device and install it in a UL/ULC Listed smoke control system. Doing so voids the UL/ULC Smoke Control Listing. Third-party devices must be provided and labeled by the factory as described in the UL/ULC Smoke Control Listing.

Important:	Only those Johnson Controls products identified for use in smoke control applications have been tested and listed by UL for use in a *Metasys* System UL 864 10th Edition UUKL/ORD-C100-13 UUKLC Smoke Control System. Installation of a product that is not UL/ULC Listed and labeled for this application prevents the entire system from being UL/ULC Listed for smoke control.

Refer to the *Metasys® System Field Equipment Controllers and Related Products Product Bulletin (LIT-12011042)* for product application details.

If the product fails to operate within its specifications, replace the product. For a replacement product, contact the nearest Johnson Controls® representative.

WATER SYPPLY RECIRC SYSTEM, FUEL OIL, AHU-2, AHU-3,HWS

Figure 1: Input/Output Modules (IOM)



Features

- **Standard BACnet® Protocol**——Provides interoperability with other Building Automation System (BAS) products that use the widely accepted BACnet standard.
- **BACnet® Testing Laboratories (BTL) Listed**——Ensures interoperability with other BTL-listed devices. BTL is a third-party agency, which validates that BAS vendor products meet the BACnet industry-standard protocol.
- **Standard Hardware and Software Platform**——Uses a common hardware design throughout the family line to support standardized wiring practices and installation workflows. Also uses a common software design to support use of a single tool for control applications, commissioning, and troubleshooting to minimize technical training.
- **Universal Inputs, Configurable Outputs, and Point Expansion Modules**——Allows multiple signal options to provide input/output flexibility.
- **Optional Local User Interface Display**— —Allows convenient monitoring and adjusting capabilities at the local device.
- **32-bit Microprocessor**—Ensures optimum performance and meets industry specifications.
- **BACnet Automatic Discovery**—Supports easy controller integration into a *Metasys* BAS.
- **Pluggable Communications Bus and Supply Power Terminal Blocks**—Expedites installation and troubleshooting.
- **Wireless Connectivity through the ZFR1800 Series or the WNC1800/ZFR182x Pro Series Wireless Field Bus Systems in MS/TP Controllers**—Enables wireless mesh connectivity to supervisory controllers, facilitating easy initial location and relocation.
- **Bluetooth® Wireless Commissioning**——Provides an easy-to-use connection to the configuration and commissioning tool.
- **End-of-Line (EOL) Switch in MS/TP Field Controllers** — Enables field controllers to be terminating devices on the communications bus.

Table 1: IOM Series Model Information (Including Point Type Counts)

		IOM 1711	IOM 2711	IOM 2721	IOM 3711	IOM 3721	IOM 3731	IOM 4711	IOM 2723[1]	IOM 3723[1]	IOM 3733[1]
Communication Protocol		BACnet MS/TP									
Engines		All Model types. Some NIE models support MS/TP and N2 devices. Refer to the *Network Engines Product Bulletin (LIT-12012138)* for details.									
Modular Jacks		6-pin SA Bus Modular Port supports one communicating sensor. **Or** you can wire up to four communicating sensors to the SA Bus Terminal Block. They cannot be used at the same time.									
		6-pin FC Bus for tool support									
Point Types	**Signals Accepted**										
Universal Input (UI)	Analog Input, Voltage Mode, 0–10 VDC Analog Input, Current Mode, 4–20 mA Analog Input, Resistive Mode, 0–2 kOhm, RTD (1k NI [Johnson Controls], 1k PT, A99B SI), NTC (10k Type L, 2.252k Type 2) Binary Input, Dry Contact Maintained Mode		2	8	4			6	8		
Binary Input (BI)	Dry Contact Maintained Mode Pulse Counter/Accumulator Mode (High Speed), 100 Hz	4				16	8	2		16	8
Analog Output (AO)	Analog Output, Voltage Mode, 0–10 VDC Analog Output, Current Mode, 4–20 mA			2				2	2		
Binary Output (BO)[2]	24 VAC Triac						8	3			8
Universal Output (UO)	Analog Output, Voltage Mode, 0–10 VDC Binary Output Mode, 24 VAC/DC Field-Effect Transistor (FET) Analog Output, Current Mode, 4–20 mA		2		4						
Configurable Output (CO)	Analog Output, Voltage Mode, 0–10 VDC Binary Output Mode, 24 VAC Triac							4			
Relay Output (RO) (-0 models only)	120/240 VAC		2		4						
Relay Output (RO) (-2 models only)	240 VAC		2		4						

1 This model is only available in certain regions. Contact your local Johnson Controls representative for more information.
2 The BOs on the MS-IOM3733-0 model requires an external low-voltage power source.

Table 2: IOM Series Ordering Information

Product Code Number	Description	UL and cUL (Canada)	CE Marked
MS-IOM1711-0	4-Point IOM with 4 BI, FC Bus and SA Bus Support	X	X
MS-IOM2711-0	6-Point IOM with 2 UI, 2 UO, 2 BO, FC Bus, and SA Bus Support. Relays are rated for 120/240 VAC.	X	
MS-IOM2711-2	6-Point IOM with 2 UI, 2 UO, 2 BO, FC Bus, and SA Bus Support. Relays are rated for 240 VAC.		X
MS-IOM2721-0	10-Point IOM with 8 UI, 2 AO, FC Bus, and SA Bus Support	X	X
MS-IOM2723-0[1]	10-Point IOM with 8 UI, 2 AO, FC Bus, and SA Bus Support	X	X

Table 2: IOM Series Ordering Information

Product Code Number	Description	UL and cUL (Canada)	CE Marked
MS-IOM3711-0	12-Point IOM with 4 UI, 4 UO, 4 BO, FC Bus, and SA Bus Support. Relays are rated for 120/240 VAC.	X	
MS-IOM3711-2	12-Point IOM with 4 UI, 4 UO, 4 BO, FC Bus, and SA Bus Support. Relays are rated for 240 VAC.		X
MS-IOM3721-0	16-Point IOM with 16 BI, FC Bus, and SA Bus Support	X	X
MS-IOM3723-0[1]	16-Point IOM with 16 BI, FC Bus, and SA Bus Support	X	X
MS-IOM3731-0	16-Point IOM with 8 BI, 8 BO, FC Bus, and SA Bus Support	X	X
MS-IOM3733-0[1]	16-Point IOM with 8 BI, 8 BO, FC Bus, and SA Bus Support Binary Outputs (BOs) on MS-IOM3733 controllers do not supply power for the outputs; the BOs require external low-voltage (<30 VAC) power sources.	X	X
MS-IOM4711-0	17-Point IOM with 6 UI, 2 BI, 3 BO, 2 AO, 4 CO, FC and SA Bus Support	X	X

1 This model is only available in certain regions. Contact your local Johnson Controls representative for more information.

Table 3: IOM Series for Smoke Control Ordering Information

Product Code Number[1,2]	Description
MS-IOM1710-0U	4-Point IOM with 4 BI; 24 VAC; FC Bus and SA Bus Support
MS-IOM1711-0U	4-Point IOM with 4 BI; 24 VAC; FC Bus and SA Bus Support
MS-IOM2710-0U	6-Point IOM with 2 UI, 2 UO, 2 BO; 24 VAC; FC Bus and SA Bus Support
MS-IOM2711-0U	6-Point IOM with 2 UI, 2 UO, 2 BO; 24 VAC; FC Bus and SA Bus Support
MS-IOM3710-0U	12-Point IOM with 4 UI, 4 UO, 4 BO; 24 VAC; FC Bus and SA Bus Support
MS-IOM3711-0U	12-Point IOM with 4 UI, 4 UO, 4 BO; 24 VAC; FC Bus and SA Bus Support
MS-IOU4710-0U	17-Point IOM with 6 UI, 2 BI, 3 BO, 2 AO, 4 CO; 24 VAC; FC Bus and SA Bus Support with Mounting Base
MS-IOM4711-0U	17-Point IOM with 6 UI, 2 BI, 3 BO, 2 AO, 4 CO; 24 VAC; FC Bus and SA Bus Support with Mounting Base

1 These devices are UL/ULC 864 Listed, File S4977, 10th Edition UUKL/ORD-C100-13 UUKLC Smoke Control System. These devices must be ordered in a Smoke Control UUKL listing.

2 All field controllers in a smoke control system must be mounted in Johnson Controls custom or standard UL 864 panels or in panels that are ordered from Johnson Controls. If these field controllers are used with panels that are not supplied by Johnson Controls, they are not compliant with the UL 864 10th Edition UUKL/ORD-C100-13 UUKLC Smoke Control System listing.

Accessories

Table 4: IOM Accessories

Product Code Number	Description
Mobile Access portal (MAP) Gateway[1]	Refer to the *Mobile Access Portal Gateway Catalog Page (LIT-1900869)* to identify the appropriate product for your region.
MS-BTCVT-1[1]	Wireless Commissioning Converter with Bluetooth Technology
MS-BTCVTCBL-700[1]	Cable Replacement Set for the MS-BTCVT-1 or the NS-ATV7003-0; Includes One 5 ft (1.5 m) Retractable Cable
ZFR1800 Series Wireless Field Bus System[1]	This system is used for installations that support BACnet/IP but can also coexist with the ZFR1800 Series when installed under the same supervisor (i.e., network engine). Refer to the *WNC1800/ZFR182x Pro Series Wireless Field Bus System Product Bulletin (LIT-12012320)* for a list of available products.
ZFR-USBHA-0[1]	ZFR USB Dongle provides a wireless connection through CCT to allow wireless commissioning of the wirelessly enabled FEC, Advanced Application Field Equipment Controller (FAC), IOM, and VMA16 controllers. Also allows use of the ZFR Checkout Tool (ZCT) in CCT.
Y64T15-0[1]	Transformer, 120/208/240 VAC Primary to 24 VAC Secondary, 92 VA, Foot Mount, 30 in. Primary Leads and 30 in. Secondary Leads, Class 2
Y65A13-0[1]	Transformer, 120 VAC Primary to 24 VAC Secondary, 40 VA, Foot Mount (Y65AS), 8 in. Primary Leads and 30 in. Secondary Leads, Class 2
Y65T42-0[1]	Transformer, 120/208/240 VAC Primary to 24 VAC Secondary, 40 VA, Hub Mount (Y65SP+), 8 in. Primary Leads and Secondary Screw Terminals, Class 2
Y65T31-0[1]	Transformer, 120/208/240 VAC Primary to 24 VAC Secondary, 40 VA, Foot Mount (Y65AR+), 8 in. Primary Leads and Secondary Screw Terminals, Class 2
AP-TBK4SA-0	Replacement MS/TP SA Bus Terminal, 4-Position Connector, Brown (Bulk Pack of 10)
AP-TBK4FC-0	Replacement MS/TP FC Bus Terminal, 4-Position Connector (Bulk Pack of 10)
AP-TBK3PW-0	Replacement Power Terminal, 3-Position Connector, Gray (Bulk Pack of 10)
AS-CBLTSTAT-0	Cable adapter for connection to 8-pin TE-6700 Series sensors
TL-BRTRP-0[1]	Portable BACnet/IP to MS/TP Router

1 This accessory is not qualified for use with a UL 864 UUKL/UUKLC 10th Edition Listed Smoke Control system.

IOM Series Technical Specifications

Table 5: IOM Series

Product Code Numbers	**MS-IOM1711-0:** 4-Point IOM with 4 BI, FC Bus and SA Bus Support **MS-IOM2711-0:** 6-Point IOM with 2 UI, 2 UO, 2 BO, FC Bus, and SA Bus Support. Relays are rated for 120/240 VAC **MS-IOM2711-2:** 6-Point IOM with 2 UI, 2 UO, 2 BO, FC Bus, and SA Bus Support. Relays are rated for 240 VAC. **MS-IOM2721-0:** 10-Point IOM with 8 UI, 2 AO, FC Bus, and SA Bus Support **MS-IOM2723-0**[1]**:** 10-Point IOM with 8 UI, 2 AO, FC Bus, and SA Bus Support **MS-IOM3711-0:** 12-Point IOM with 4 UI, 4 UO, 4 BO, FC Bus, and SA Bus Support. Relays are rated for 120/240 VAC **MS-IOM3711-2:** 12-Point IOM with 4 UI, 4 UO, 4 BO, FC Bus, and SA Bus Support. Relays are rated for 240 VAC **MS-IOM3721-0:** 16-Point IOM with 16 BI, FC Bus, and SA Bus Support **MS-IOM3723-0**[1]**:** 16-Point IOM with 16 BI, FC Bus, and SA Bus Support **MS-IOM3731-0:** 16-Point IOM with 8 BI, 8 BO, FC Bus, and SA Bus Support **MS-IOM3733-0**[1]**:** 16-Point IOM with 8 BI, 8 BO, FC Bus, and SA Bus Support **MS-IOM4711-0:** 17-Point IOM with 6 UI, 2 BI, 3 BO, 2 AO, 4 CO, FC and SA Bus Support
	Smoke Control Models: **MS-IOM1710-0U:** 4-Point IOM with 4 BI, FC Bus and SA Bus Support **MS-IOM1711-0U:** 4-Point IOM with 4 BI, FC Bus and SA Bus Support **MS-IOM2710-0U:** 6-Point IOM with 2 UI, 2 UO, 2 BO, FC Bus, and SA Bus Support **MS-IOM2711-0U:** 6-Point IOM with 2 UI, 2 UO, 2 BO, FC Bus, and SA Bus Support **MS-IOM3710-0U:** 12-Point IOM with 4 UI, 4 UO, 4 BO, FC Bus, and SA Bus Support **MS-IOM3711-0U:** 12-Point IOM with 4 UI, 4 UO, 4 BO, FC Bus, and SA Bus Support **MS-IOU4710-0U:** 17-Point IOM with 6 UI, 2 BI, 3 BO, 2 AO, 4 CO, FC Bus and SA Bus Support with Mounting **MS-IOM4711-0U:** 17-Point IOM with 6 UI, 2 BI, 3 BO, 2 AO, 4 CO, FC Bus and SA Bus Support with Mounting
Supply Voltage	24 VAC (nominal, 20 VAC minimum/30 VAC maximum), 50/60 Hz, Power Supply Class 2 (North America), Safety Extra-Low Voltage (SELV) Europe
Power Consumption	14 VA maximum **Note:** VA ratings do not include any power supplied to the peripheral devices connected to Binary Outputs (BOs) or Configurable Outputs (COs), which can consume up to 12 VA for each BO or CO, for a possible total consumption of an additional 84 VA (maximum), depending on the IOM model.
Ambient Conditions	**Operating:** 0 to 50°C (32 to 122°F); 10 to 90% RH noncondensing **Storage:** -40 to 80°C (-40 to 176°F); 5 to 95% RH noncondensing
Addressing	DIP switch set; valid field controller device addresses 4–127 (Device addresses 0–3 and 128–255 are reserved and not valid IOM addresses).
Communications Bus[2]	BACnet MS/TP, RS-485 3-wire FC Bus between the supervisory controller and field devices 4-wire SA Bus between field controller, network sensors, and other sensor/actuator devices. Includes a lead source 15 VDC supply power (from field controller) to bus devices.
Processor	**MS-IOM1711-0, MS-IOM2711-0, MS-IOM2711-2, MS-IOM2721-0, MS-IOM3711-0, MS-IOM3711-2, MS-IOM3731-0, and MS-IOM4711-0**: H8SX/166xR Renesas® 32-bit microcontroller **MS-IOM2723-0**[1]**, MS-IOM3723-0**[1]**, and MS-IOM3733-0**[1]: RX631 32-bit Renesas microcontroller
Memory	**MS-IOM1711-0, MS-IOM2711-0, MS-IOM2711-2, MS-IOM2721-0, MS-IOM3711-0, MS-IOM3711-2, MS-IOM3731-0, and MS-IOM4711-0:** 512 KB Flash Memory and 128 KB RAM **MS-IOM2723-0**[1]**, MS-IOM3723-0**[1]**, and MS-IOM3733-0**[1]**:** 4 MB External Serial Flash Memory

Table 5: IOM Series

Input and Output Capabilities	**MS-IOM1711-0:** 4 - Binary Inputs: Defined as Dry Contact Maintained or Pulse Counter/ Accumulator Mode
	MS-IOM2711-x: 2 - Universal Inputs: Defined as 0–10 VDC, 4–20 mA, 0–600k ohm, or Binary Dry Contact 2 - Universal Outputs: Analog Output: Voltage Mode, 0-10 VDC; Binary Output Mode: 24 VAC/DC FET; Analog Output: Current Mode, 4-20 mA 2 - Relay Outputs: (Single-Pole, Double-Throw) **UL 916** (-0 model only): 1/4 hp 120 VAC, 1/2 hp 240 VAC; 360 VA Pilot Duty at 120/240 VAC (B300); 3 A Non-inductive 24-240 VAC **EN 60730** (-2 model only): 6 (4) A N.O. or N.C. only, 240 VAC
	MS-IOM2721-0 and MS-IOM2723-0[1]: 8 - Universal Inputs: Defined as 0–10 VDC, 4–20 mA, 0–600k ohm, or Binary Dry Contact 2 - Analog Outputs: Defined as 0–10 VDC or 4–20 mA
	MS-IOM3711-x: 4 - Universal Inputs: Defined as 0–10 VDC, 4–20 mA, 0–600k ohm, or Binary Dry Contact 4 - Universal Outputs: Analog Output: Voltage Mode, 0-10 VDC; Binary Output Mode: 24 VAC/DC FET; Analog Output: Current Mode, 4-20 mA 4 - Relay Outputs: (Single-Pole, Double-Throw) **UL 916** (-0 model only): 1/4 hp 120 VAC, 1/2 hp 240 VAC; 360 VA Pilot Duty at 120/240 VAC (B300); 3 A Non-inductive 24-240 VAC **EN 60730** (-2 model only): 6 (4) A N.O. or N.C. only, 240 VAC
	MS-IOM3721-0 and MS-IOM3723-0[1]: 16 - Binary Inputs: Defined as Dry Contact Maintained or Pulse Counter/Accumulator Mode
	MS-IOM3731-0 and MS-IOM3733-0[1]: 8 - Binary Inputs: Defined as Dry Contact Maintained or Pulse Counter/Accumulator Mode 8 - Binary Outputs: Defined as 24 VAC Triac (Require external low-voltage power source) **Note:** Binary Outputs (BOs) on MS-IOM3733-0 models do not supply power for the outputs; the BOs require external low-voltage (< 30 VAC) power sources.
	MS-IOM4711-0: 6 - Universal Inputs: Defined as 0–10 VDC, 4–20 mA, 0–600k ohm, or Binary Dry Contact 2 - Binary Inputs: Defined as Dry Contact Maintained or Pulse/Counter Accumulator Mode 3 - Binary Outputs: Defined as 24 VAC Triac (selectable internal or external source power) 4 - Configurable Outputs: Defined as 0–10 VDC or 24 VAC Triac BO 2 - Analog Outputs: Defined as 0–10 VDC or 4–20 mA
Analog Input/Analog Output Resolution and Accuracy	**MS-IOM1711-0, MS-IOM2711-0, MS-IOM2711-2, MS-IOM2721-0, MS-IOM3711-0, MS-IOM3711-2, MS-IOM3731-0, and MS-IOM4711-0:** **Analog Input:** 16-bit resolution **Analog Output:** 16-bit resolution and ±200 mV in 0–10 VDC applications **MS-IOM2723-0[1], MS-IOM3723-0[1], and MS-IOM3733-0[1]:** **Analog Input:** 15-bit resolution **Analog Output:** ±200 mV in 0–10 VDC applications

Table 5: IOM Series

Terminations	**MS-IOM1711-0, MS-IOM2711-0, MS-IOM2711-2, MS-IOM2721-0, MS-IOM3711-0, MS-IOM3711-2, MS-IOM3731-0, and MS-IOM4711-0:** Input/Output: Fixed Screw Terminal Blocks SA/FC Bus and Supply Power: 4-wire and 3-wire Pluggable Screw Terminal Blocks SA/FC Bus Port: RJ-12 6-Pin Modular Jacks **MS-IOM2723-0[1], MS-IOM3723-0[1], and MS-IOM3733-0[1]:** Input/Output: Fixed Screw Terminal Blocks **Note:** There are no labels on I/O terminal blocks. The labels are above/below the terminal blocks on the IOM packaging. SA/FC Bus and Supply Power: 4-wire and 3-wire Pluggable Screw Terminal Blocks
Mounting	Horizontal on single 35 mm DIN rail mount (preferred), or screw mount on flat surface with three integral mounting clips on controller
Housing	Enclosure material: ABS and polycarbonate UL94 5VB; self-extinguishing, Plenum-rated protection class: IP20 (IEC529)
Dimensions (Height x Width x Depth)	**MS-IOM1711 and MS-IOM2711 Models:** 150 x 120 x 53 mm (5-7/8 x 4-3/4 x 2-1/8 in.) including terminals and mounting clips **MS-IOM2721-0, MS-IOM2723-0[1], MS-IOM3721-0, MS-IOM3723-0[1], MS-IOM3731-0, and MS-IOM3733-0[1] models:** 150 x 164 x 53 mm (5-7/8 x 6-7/16 x 2-1/8 in.) including terminals and mounting clips **MS-IOM3711-0 and MS-IOM4711-0 Models:** 150 x 190 x 53 mm (5-7/8 x 7-1/2 x 2-1/8 in.) including terminals and mounting clips **Note:** Mounting space for all field controllers requires an additional 50 mm (2 in.) space on top, bottom, and front face of controller for easy cover removal, ventilation, and wire terminations.
Weight	0.5 kg (1.1 lb) maximum
Compliance	**United States:** UL Listed, File E107041, CCN PAZX, UL 916, Energy Management Equipment; FCC Compliant to CFR47, Part 15, Subpart B, Class A UL Listed, File S4977, UL 864 UUKL/UUKLC 10th Edition Listed, Smoke Control Units and Accessories for Fire Alarm Systems Equipment (models with **U** product code suffix only) **Note:** Except MS-IOM2711-2 and MS-IOM3711-2
CE	**Canada:** UL Listed, File E107041, CCN PAZX7, CAN/CSA C22.2 No. 205, Signal Equipment; Industry Canada Compliant, ICES-003 UL Listed, File S4977, UL 864 UUKL/ORD-C100-13 10th Edition Listed, Smoke Control Units and Accessories for Fire Alarm Systems (models with U product code suffix only) **Note:** Except MS-IOM2711-2 and MS-IOM3711-2
	Europe: CE Mark – Johnson Controls declares that this product is in compliance with the essential requirements and other relevant provisions of the EMC Directive. Declared as Independently Mounted, Intended for Panel Mounting, Operating Control Type 1.B, 4kV rated impulse voltage, 100.7°C ball pressure test. **Note:** Except MS-IOM2711-0 and MS-IOM3711-0
	Australia and New Zealand: RCM Mark, Australia/NZ Emissions Compliant **Note:** Except MS-IOM2711-0 and MS-IOM3711-0
	BACnet International: **MS-IOM1711-0, MS-IOM2711-0, MS-IOM2711-2, MS-IOM2721-0, MS-IOM3711-0, MS-IOM3711-2, MS-IOM3731-0, and MS-IOM4711-0:** BACnet Testing Laboratories (BTL) Protocol Revision 4 Listed BACnet Application Specific Controller (B-ASC) **MS-IOM2723-0[1], MS-IOM3723-0[1], and MS-IOM3733-0[1]:** BACnet Testing Laboratories (BTL) Protocol Revision 12 Listed BACnet Smart Actuator (B-SA)

1 This model is only available in certain regions. Contact your local Johnson Controls representative for more information.
2 For more information, refer to the *MS/TP Communications Bus Technical Bulletin (LIT-12011034)*.

The performance specifications are nominal and conform to acceptable industry standards. For application at conditions beyond these specifications, consult the local Johnson Controls office. Johnson Controls shall not be liable for damages resulting from misapplication or misuse of its products.

Building Technologies & Solutions
507 E. Michigan Street, Milwaukee, WI 53202

Metasys® and Johnson Controls® are registered trademarks of Johnson Controls.
All other marks herein are the marks of their respective owners.© 2018 Johnson Controls

Published in U.S.A.
www.johnsoncontrols.com

Johnson Controls

Code No. LIT-1900350
Issued February 2017

NS Series Network Sensors Catalog Page

Description

The NS Series Network Sensor offering includes NS Series Network Zone Sensors and NS Series Network Discharge Air Sensors. The NS Series Network Sensors are designed to function directly with *Metasys*® system Field Equipment Controllers (FECs), Input/Output Modules (IOMs), VAV Modular Assembly (VMA16) Controllers, and Facility Explorer FX-PC Series Programmable Controllers (FX-PCGs, FX-PCVs, and FX-PCXs). The sensors are also compatible with Verasys™ and Johnson Controls Smart Equipment.

The majority of NS Series Network Zone Sensors monitor room temperature; however, options are available to also monitor zone humidity, carbon dioxide (CO_2), local temperature setpoint adjustments, and other variables. These data are transmitted to a controller on the Sensor Actuator (SA) Bus.

Some models of NS Series Network Zone Sensors include an onboard passive infrared (PIR) occupancy sensor that detects motion to determine if a space is occupied. This feature maximizes up to 30% energy savings in high-energy usage environments such as schools, dormitories, offices, hospitals, and hotels by adjusting the temperature of the space based on the occupancy status. In addition, the PIR occupancy sensor facilitates trending of floor space usage in these environments.

The NS Series Network Zone Sensors include models with either a temperature setpoint dial or setpoint pushbuttons and LCD that allows occupants to view the zone temperature, Relative Humidity (RH), and view and adjust the zone temperature setpoint. Some temperature and humidity models include an RH pushbutton to toggle between temperature and RH on the display. These models also have the capability to set the default display to either temperature or RH. Some models also include an °F/°C pushbutton to toggle between degrees Fahrenheit (F) and degrees Celsius (C).

A fan mode pushbutton is included to set the desired fan speed (AUTO-OFF-low-medium-high). An occupancy override function allows the user to signal to the controller that the zone is occupied to override the scheduled mode. Some models have DIP switches to set a unique address for applications that require multiple sensors.

For communication wiring flexibility, the wires connecting the network zone sensor to a controller can be terminated using a modular jack or screw terminals.

Note: Mixing of phone jack and screw terminal devices on the same SA bus segment must be avoided.

Each network sensor includes an SA Bus access port to allow accessories to access the SA Bus. This plug allows accessories to service or commission the connected controller or gain access to any other controller on the same Field Controller (FC) Bus.

The NS Series Network Zone Sensor offering includes models that can be surface mounted, vertical wallbox mounted, or flush mounted to meet the requirements of the specific application. Some NS Series Sensor models are designed to assist with the California Energy Code (Title 24). Select models offer stylish black enclosures to suit specific architectural and interior design needs.

The NS Series Network Discharge Air Sensors monitor the duct temperature, typically at the discharge of the VAV box, and transmit this data to a local controller on the SA Bus using the 10 ft (305 cm) wiring lead included with the unit. The 10 ft (305 cm) wiring lead consists of four 22 AWG (0.6 mm) trade-size, color-coded wires encased in a plenum-rated jacket. Each of the wires is stripped and tinned for easy connection to the SA Bus screw terminal block.

The NS Series Network Discharge Air Sensors are available with either a 4- or 8-in. (102 or 203 mm) temperature probe. All models include DIP switches for applications requiring multiple discharge air sensors, each with a unique DIP switch configurable address.

NS Series Network Sensors



Refer to the *NS Series Network Sensors Product Bulletin (LIT-12011574)* for important product application and single point of contact information.

Features

- BACnet® Master-Slave/Token-Passing (MS/TP) protocol communication—Provides compatibility with *Metasys* system field controllers and Facility Explorer programmable controllers in a proven communication network.
- Backlit LCD available on some models—Provides real-time status of the environment with backlighting activated during user interaction.
- Simple temperature setpoint adjustment available on some models—Enables you to change the setpoint with the turn of a dial or press of a button.
- Onboard PIR occupancy sensor available on some models—Maximizes up to 30% energy savings in high-energy usage environments, and facilitates trending of floor space usage.
- Temporary occupancy available on some models—Provides a timed override command, which temporarily initiates an alternate mode.
- Field-selectable default display setting on some models—Allows you to toggle between temperature and RH on the display, and set the desired default for continuous viewing.
- Fahrenheit/Celsius (°F/°C) button available on some models—Toggles the display temperature between degrees Celsius and degrees Fahrenheit.

Note: Since some NS Series Network Sensor features are not supported in previous releases of *Metasys* or Facility Explorer system software, it is recommended that the system software be kept up to date.

Repair Information

If the NS Series Network Zone Sensor or the NS Series Network Discharge Air Sensor fails to operate within its specifications, replace the unit. For a replacement sensor, contact the nearest Johnson Controls® representative.

The performance specifications are nominal and conform to acceptable industry standards. For applications at conditions beyond these specifications, consult the local Johnson Controls office. Johnson Controls shall not be liable for damages resulting from misapplication or misuse of its products. © 2017 Johnson Controls.

NS Series Network Sensors Catalog Page (Continued)

Selection Charts

Network Zone Sensor Ordering Information—Temperature Only Models (Part 1 of 2)

Product Code Number	Size (mm), Height x Width	Vertical Wallbox-Mounted (WB) or Surface-Mounted (SM)	Johnson Controls Logo	LCD Display	Temperature Adjustment: Setpoint Dial (Set), Warmer/Cooler Dial (W/C), or Setpoint Push-buttons (PB)[1]	Occupancy Override[2] Button, PIR Occupancy Sensor	°F/°C Scale Toggle	Fan Control	Screw Terminals (ST) or Modular Jack (MJ)	Address Switches	VAV Balancing Feature
NS-ATA7001-0	80 x 80	SM	Yes	Yes	Set	Yes, No	No	No	MJ	No	No
NS-ATA7001-0A[3]	80 x 80	SM	Yes	Yes	Set	Yes, No	No	No	MJ	No	No
NS-ATA7002-0	80 x 80	SM	Yes	Yes	Set	Yes, No	No	No	ST	No	No
NS-ATA7002-0A[3]	80 x 80	SM	Yes	Yes	Set	Yes, No	No	No	ST	No	No
NS-ATA7002-3[4]	80 x 80	SM	Yes	Yes	Set	Yes, No	No	No	ST	No	No
NS-ATA7003-0	80 x 80	SM	Yes	Yes	Set	Yes, No	No	No	ST	Yes	No
NS-ATA7004-2	80 x 80	SM	No	Yes	Set	Yes, No	No	No	ST, MJ	Yes	No
NS-ATB7001-0	80 x 80	SM	Yes	Yes	Set	Yes, No	Yes	No	MJ	No	No
NS-ATB7002-0	80 x 80	SM	Yes	Yes	Set	Yes, No	Yes	No	ST	No	No
NS-ATB7003-0	80 x 80	SM	Yes	Yes	Set	Yes, No	Yes	No	ST	Yes	No
NS-ATC7001-0	80 x 80	SM	Yes	Yes	Set	Yes, No	No	Yes	MJ	No	No
NS-ATC7002-0	80 x 80	SM	Yes	Yes	Set	Yes, No	No	Yes	ST	No	No
NS-ATC7005-2	80 x 80	SM	No	Yes	Set	Yes, No	No	Yes	ST, MJ	No	No
NS-ATD7001-0	80 x 80	SM	Yes	Yes	Set	Yes, No	Yes	Yes	MJ	No	No
NS-ATD7002-0	80 x 80	SM	Yes	Yes	Set	Yes, No	Yes	Yes	ST	No	No
NS-ATF7001-0	80 x 80	SM	Yes	Yes	W/C	Yes, No	Yes	No	MJ	No	No
NS-ATF7002-0	80 x 80	SM	Yes	Yes	W/C	Yes, No	Yes	No	ST	No	No
NS-ATN7001-0	80 x 80	SM	Yes	No	N/A	No, No	No	No	MJ	No	No
NS-ATN7001-2	80 x 80	SM	No	No	N/A	No, No	No	No	MJ	No	No
NS-ATN7003-0	80 x 80	SM	Yes	No	N/A	No, No	No	No	ST	Yes	No
NS-ATN7003-2	80 x 80	SM	No	No	N/A	No, No	No	No	ST	Yes	No
NS-ATN7004-2	80 x 80	SM	No	No	N/A	No, No	No	No	ST, MJ	Yes	No
NS-ATP7001-0	80 x 80	SM	Yes	No	W/C	Yes, No	No	No	MJ	No	No
NS-ATP7001-2	80 x 80	SM	No	No	W/C	Yes, No	No	No	MJ	No	No
NS-ATP7002-0	80 x 80	SM	Yes	No	W/C	Yes, No	No	No	ST	No	No
NS-ATP7002-2	80 x 80	SM	No	No	W/C	Yes, No	No	No	ST	No	No
NS-ATP7003-0	80 x 80	SM	Yes	No	W/C	Yes, No	No	No	ST	Yes	No
NS-ATP7003-2	80 x 80	SM	No	No	W/C	Yes, No	No	No	ST	Yes	No
NS-ATV7001-0	80 x 80	SM	Yes	Yes	Set	Yes, No	Yes	No[5]	MJ	No	Yes
NS-ATV7002-0	80 x 80	SM	Yes	Yes	Set	Yes, No	Yes	No[5]	ST	No	Yes
NS-BTB7001-0	120 x 80	WB, SM	Yes	Yes	Set	Yes, No	Yes	No	MJ	No	No
NS-BTB7001-2	120 x 80	WB, SM	No	Yes	Set	Yes, No	Yes	No	MJ	No	No
NS-BTB7001-3[4]	120 x 80	WB, SM	Yes	Yes	Set	Yes, No	Yes	No	MJ	No	No
NS-BTB7002-0	120 x 80	WB, SM	Yes	Yes	Set	Yes, No	Yes	No	ST	No	No
NS-BTB7003-0	120 x 80	WB, SM	Yes	Yes	Set	Yes, No	Yes	No	ST	Yes	No
NS-BTB7003-2	120 x 80	WB, SM	No	Yes	Set	Yes, No	Yes	No	ST	Yes	No
NS-BTF7001-0	120 x 80	WB, SM	Yes	Yes	W/C	Yes, No	Yes	No	MJ	No	No
NS-BTF7002-0	120 x 80	WB, SM	Yes	Yes	W/C	Yes, No	Yes	No	ST	No	No
NS-BTJ7001-0	120 x 80	WB, SM	Yes	Yes	PB	Yes, No	Yes	No	MJ	No	No
NS-BTJ7001-2	120 x 80	WB, SM	No	Yes	PB	Yes, No	Yes	No	MJ	No	No
NS-BTJ7002-0	120 x 80	WB, SM	Yes	Yes	PB	Yes, No	Yes	No	ST	No	No
NS-BTJ7002-2	120 x 80	WB, SM	No	Yes	PB	Yes, No	Yes	No	ST	No	No
NS-BTJ7003-0	120 x 80	WB, SM	Yes	Yes	PB	Yes, No	Yes	No	ST	Yes	No
NS-BTJ7003-2	120 x 80	WB, SM	No	Yes	PB	Yes, No	Yes	No	ST	Yes	No
NS-BTK7001-0	120 x 80	WB, SM	Yes	Yes	PB	Yes, No	Yes	Yes	MJ	No	No
NS-BTK7001-2	120 x 80	WB, SM	No	Yes	PB	Yes, No	Yes	Yes	MJ	No	No
NS-BTK7002-0	120 x 80	WB, SM	Yes	Yes	PB	Yes, No	Yes	Yes	ST	No	No
NS-BTK7002-2	120 x 80	WB, SM	No	Yes	PB	Yes, No	Yes	Yes	ST	No	No
NS-BTL7003-0	120 x 80	WB, SM	Yes	No	N/A	Yes, No	No	No	ST	Yes	No
NS-BTN7001-0	120 x 80	WB, SM	Yes	No	N/A	No, No	No	No	MJ	No	No

The performance specifications are nominal and conform to acceptable industry standards. For applications at conditions beyond these specifications, consult the local Johnson Controls office. Johnson Controls shall not be liable for damages resulting from misapplication or misuse of its products. © 2017 Johnson Controls.

NS Series Network Sensors Catalog Page (Continued)

Network Zone Sensor Ordering Information—Temperature Only Models (Part 2 of 2)

Product Code Number	Size (mm), Height x Width	Vertical Wallbox-Mounted (WB) or Surface-Mounted (SM)	Johnson Controls Logo	LCD Display	Temperature Adjustment: Setpoint Dial (Set), Warmer/Cooler Dial (W/C), or Setpoint Push-buttons (PB)[1]	Occupancy Override[2] Button, PIR Occupancy Sensor	°F/°C Scale Toggle	Fan Control	Screw Terminals (ST) or Modular Jack (MJ)	Address Switches	VAV Balancing Feature
NS-BTN7001-2	120 x 80	WB, SM	No	No	N/A	No, No	No	No	MJ	No	No
NS-BTN7003-0	120 x 80	WB, SM	Yes	No	N/A	No, No	No	No	ST	Yes	No
NS-BTN7003-2	120 x 80	WB, SM	No	No	N/A	No, No	No	No	ST	Yes	No
NS-BTP7001-0	120 x 80	WB, SM	Yes	No	W/C	Yes, No	No	No	MJ	No	No
NS-BTP7001-2	120 x 80	WB, SM	No	No	W/C	Yes, No	No	No	MJ	No	No
NS-BTP7002-0	120 x 80	WB, SM	Yes	No	W/C	Yes, No	No	No	ST	No	No
NS-BTP7002-2	120 x 80	WB, SM	No	No	W/C	Yes, No	No	No	ST	No	No
NS-BTP7003-0	120 x 80	WB, SM	Yes	No	W/C	Yes, No	No	No	ST	Yes	No
NS-BTV7001-0	120 x 80	WB, SM	Yes	Yes	Set	Yes, No	Yes	No[5]	MJ	No	Yes
NS-BTV7002-0	120 x 80	WB, SM	Yes	Yes	Set	Yes, No	Yes	No[5]	ST	No	Yes
NS-MTB7001-0	120 x 80	WB, SM	Yes	Yes	Set	Yes, Yes	Yes	No	MJ	No	No
NS-MTB7002-0	120 x 80	WB, SM	Yes	Yes	Set	Yes, Yes	Yes	No	ST	No	No
NS-MTB7004-2	120 x 80	WB, SM	No	Yes	Set	Yes, Yes	Yes	No	ST, MJ	Yes	No
NS-MTJ7001-0	120 x 80	WB, SM	Yes	Yes	PB	Yes, Yes	Yes	No	MJ	No	No
NS-MTJ7001-2	120 x 80	WB, SM	No	Yes	PB	Yes, Yes	Yes	No	MJ	No	No
NS-MTJ7002-0	120 x 80	WB, SM	Yes	Yes	PB	Yes, Yes	Yes	No	ST	No	No
NS-MTJ7002-2	120 x 80	WB, SM	No	Yes	PB	Yes, Yes	Yes	No	ST	No	No
NS-MTL7001-0	120 x 80	WB, SM	Yes	No	N/A	Yes, Yes	No	No	MJ	No	No
NS-MTL7002-0	120 x 80	WB, SM	Yes	No	N/A	Yes, Yes	No	No	ST	No	No
NS-MTN7004-2	120 x 80	WB, SM	No	No	N/A	No, Yes	No	No	ST, MJ	Yes	No

1. Use the setpoint dial or pushbuttons to adjust the absolute temperature setpoint.
2. An Occupancy Override button is available on NS-xxP and NS-xxL models. Other models allow Occupancy Override through the setpoint adjustment interface.
3. This model is currently only available in Asia. Contact your Johnson Controls representative for more information.
4. These models feature a black enclosure.
5. In the VAV balancing models, the fan control button is replaced by a light bulb button used in the VAV balancing process.

Network Zone Sensor Ordering Information—Temperature and Humidity Models without RH Display (Part 1 of 2)

Product Code Number	Size (mm), Height x Width	Vertical Wallbox-Mounted (WB) or Surface-Mounted (SM)	Johnson Controls Logo	LCD Display, RH Display	Humidity Element Accuracy	Temperature Adjustment: Setpoint Dial (Set) or Warmer/Cooler Dial (W/C)	Occupancy Override[1] Button, PIR Occupancy Sensor	°F/°C Scale Toggle	Screw Terminals (ST) or Modular Jack (MJ)	Address Switches
NS-AHA7001-0	80 x 80	SM	Yes	Yes, No	3%	Set	Yes, No	No	MJ	No
NS-AHA7002-0	80 x 80	SM	Yes	Yes, No	3%	Set	Yes, No	No	ST	No
NS-AHA7004-2	80 x 80	SM	No	Yes, No	3%	Set	Yes, No	No	ST, MJ	Yes
NS-AHB7001-0	80 x 80	SM	Yes	Yes, No	3%	Set	Yes, No	Yes	MJ	No
NS-AHB7002-0	80 x 80	SM	Yes	Yes, No	3%	Set	Yes, No	Yes	ST	No
NS-AHB7003-0	80 x 80	SM	Yes	Yes, No	3%	Set	Yes, No	Yes	ST	Yes
NS-AHN7001-0	80 x 80	SM	Yes	None	3%	N/A	No, No	No	MJ	No
NS-AHN7001-2	80 x 80	SM	No	None	3%	N/A	No, No	No	MJ	No
NS-AHN7003-0	80 x 80	SM	Yes	None	3%	N/A	No, No	No	ST	Yes
NS-AHN7004-2	80 x 80	SM	No	None	3%	N/A	No, No	No	ST, MJ	Yes
NS-AHP7001-0	80 x 80	SM	Yes	None	3%	W/C	Yes, No	No	MJ	No
NS-APA7001-0	80 x 80	SM	Yes	Yes, No	2%	Set	Yes, No	No	MJ	No
NS-APA7002-0	80 x 80	SM	Yes	Yes, No	2%	Set	Yes, No	No	ST	No
NS-APB7001-0	80 x 80	SM	Yes	Yes, No	2%	Set	Yes, No	Yes	MJ	No
NS-APB7002-0	80 x 80	SM	Yes	Yes, No	2%	Set	Yes, No	Yes	ST	No
NS-APB7003-0	80 x 80	SM	Yes	Yes, No	2%	Set	Yes, No	Yes	ST	Yes
NS-BHB7001-0	120 x 80	WB, SM	Yes	Yes, No	3%	Set	Yes, No	Yes	MJ	No
NS-BHB7002-0	120 x 80	WB, SM	Yes	Yes, No	3%	Set	Yes, No	Yes	ST	No
NS-BHB7003-0	120 x 80	WB, SM	Yes	Yes, No	3%	Set	Yes, No	Yes	ST	Yes
NS-BHN7001-0	120 x 80	WB, SM	Yes	None	3%	N/A	No, No	No	MJ	No
NS-BHN7001-2	120 x 80	WB, SM	No	None	3%	N/A	No, No	No	MJ	No
NS-BHN7003-0	120 x 80	WB, SM	Yes	None	3%	N/A	No, No	No	ST	Yes

The performance specifications are nominal and conform to acceptable industry standards. For applications at conditions beyond these specifications, consult the local Johnson Controls office. Johnson Controls shall not be liable for damages resulting from misapplication or misuse of its products. © 2017 Johnson Controls.

NS Series Network Sensors Catalog Page (Continued)

Network Zone Sensor Ordering Information—Temperature and Humidity Models without RH Display (Part 2 of 2)

Product Code Number	Size (mm), Height x Width	Vertical Wallbox-Mounted (WB) or Surface-Mounted (SM)	Johnson Controls Logo	LCD Display, RH Display	Humidity Element Accuracy	Temperature Adjustment: Setpoint Dial (Set) or Warmer/Cooler Dial (W/C)	Occupancy Override[1] Button, PIR Occupancy Sensor	°F/°C Scale Toggle	Screw Terminals (ST) or Modular Jack (MJ)	Address Switches
NS-BHP7001-0	120 x 80	WB, SM	Yes	None	3%	W/C	Yes, No	No	MJ	No
NS-BHP7003-0	120 x 80	WB, SM	Yes	None	3%	W/C	Yes, No	No	ST	Yes
NS-BPB7001-0	120 x 80	WB, SM	Yes	Yes, No	2%	Set	Yes, No	Yes	MJ	No
NS-BPB7002-0	120 x 80	WB, SM	Yes	Yes, No	2%	Set	Yes, No	Yes	ST	No
NS-BPB7003-0	120 x 80	WB, SM	Yes	Yes, No	2%	Set	Yes, No	Yes	ST	Yes
NS-MHB7004-2	120 x 80	WB, SM	No	Yes, No	3%	Set	Yes, Yes	Yes	ST, MJ	Yes
NS-MHL7001-0	120 x 80	WB, SM	Yes	No, No	3%	N/A	Yes, Yes	No	MJ	No
NS-MHL7002-0	120 x 80	WB, SM	Yes	No, No	3%	N/A	Yes, Yes	No	ST	No
NS-MHN7004-2	120 x 80	WB, SM	No	None	3%	N/A	No, Yes	No	ST, MJ	Yes

1. An Occupancy Override button is available on NS-xxP and NS-xxL models. Other models allow Occupancy Override through the setpoint adjustment interface.

Network Zone Sensor Ordering Information—Temperature and Humidity Models with Temperature or RH Display (Field-Selectable Default Display)

Product Code Number	Size (mm), Height x Width	Vertical Wallbox-Mounted (WB) or Surface-Mounted (SM)	Johnson Controls Logo	LCD Display, RH Display	Humidity Element Accuracy	Temperature Adjustment: Setpoint Dial (Set) or Setpoint Pushbuttons (PB)[1]	Occupancy Override[2]	°F/°C Scale Toggle	Screw Terminals (ST) or Modular Jack (MJ)	Address Switches
NS-AHR7101-0	80 x 80	SM	Yes	Yes, Yes	3%	Set	Yes	Yes	MJ	No
NS-AHR7102-0	80 x 80	SM	Yes	Yes, Yes	3%	Set	Yes	Yes	ST	No
NS-AHR7103-0	80 x 80	SM	Yes	Yes, Yes	3%	Set	Yes	Yes	ST	Yes
NS-APR7101-0	80 x 80	SM	Yes	Yes, Yes	2%	Set	Yes	Yes	MJ	No
NS-APR7102-0	80 x 80	SM	Yes	Yes, Yes	2%	Set	Yes	Yes	ST	No
NS-BHM7101-0	120 x 80	WB, SM	Yes	Yes, Yes	3%	PB	Yes	Yes	MJ	No
NS-BHM7101-2	120 x 80	WB, SM	No	Yes, Yes	3%	PB	Yes	Yes	MJ	No
NS-BHM7102-0	120 x 80	WB, SM	Yes	Yes, Yes	3%	PB	Yes	Yes	ST	No
NS-BHM7102-2	120 x 80	WB, SM	No	Yes, Yes	3%	PB	Yes	Yes	ST	No
NS-BHM7103-0	120 x 80	WB, SM	Yes	Yes, Yes	3%	PB	Yes	Yes	ST	Yes
NS-BHM7103-2	120 x 80	WB, SM	No	Yes, Yes	3%	PB	Yes	Yes	ST	Yes
NS-BHR7101-0	120 x 80	WB, SM	Yes	Yes, Yes	3%	Set	Yes	Yes	MJ	No
NS-BHR7103-0	120 x 80	WB, SM	Yes	Yes, Yes	3%	Set	Yes	Yes	ST	Yes

1. Use the setpoint dial or pushbuttons to adjust the absolute temperature setpoint.
2. An Occupancy Override button is available on NS-xxP and NS-xxL models. Other models allow Occupancy Override through the setpoint adjustment interface.

Network Zone Sensor Ordering Information—Motion Detection Only Models (No Temperature or Humidity Sensing)

Product Code Number	Size (mm), Height x Width	Vertical Wallbox-Mounted (WB), or Surface-Mounted (SM)	Johnson Controls Logo	LCD Display	PIR Occupancy Sensor	Screw Terminals (ST), or Modular Jack (MJ)	Address Switches
NS-MNN7001-0	120 x 80	WB, SM	Yes	No	Yes	MJ	No
NS-MNN7003-0	120 x 80	WB, SM	Yes	No	Yes	ST	Yes
NS-MNN7004-2	120 x 80	WB, SM	No	No	Yes	ST, MJ	Yes

Network Zone Sensor Ordering Information—CO_2 Models

Product Code Number	Size (mm), Height x Width	Vertical Wallbox-Mounted (WB), or Surface-Mounted (SM)	LCD Display	CO_2 Measurement Range	Johnson Controls Logo	Screw Terminals (ST), or Modular Jack (MJ)	Sensor Addressing
NS-BCN7004-0	120 x 80	WB, SM	No	0 to 2,000 ppm	Yes	ST, MJ	DIP Switch (212 to 219)
NS-BCN7004-2	120 x 80	WB, SM	No	0 to 2,000 ppm	No	ST, MJ	DIP Switch (212 to 219)

The performance specifications are nominal and conform to acceptable industry standards. For applications at conditions beyond these specifications, consult the local Johnson Controls office. Johnson Controls shall not be liable for damages resulting from misapplication or misuse of its products. © 2017 Johnson Controls. **www.johnsoncontrols.com**

NS Series Network Sensors Catalog Page (Continued)

Network Zone Sensor Ordering Information—Flush-Mount Temperature Only Models

Product Code Number	Faceplate Dimensions, Height x Width	Mounting	LCD Display	Temperature Measurement Range	Johnson Controls Logo	Terminations	Sensor Addressing
NS-FTN7003-0	4-1/2 in. x 2-3/4 in. (114 mm x 70 mm)	Flush-Mount	No	32.0°F/0.0°C to 104.0°F/40.0°C	Yes	Screw Terminal Block	DIP Switch (200 to 203)
NS-FTN7003-2	4-1/2 in. x 2-3/4 in. (114 mm x 70 mm)	Flush-Mount	No	32.0°F/0.0°C to 104.0°F/40.0°C	No	Screw Terminal Block	DIP Switch (200 to 203)

Network Discharge Air Sensor Ordering Information

Product Code Number	Dimensions, Height x Width x Depth	Johnson Controls Logo	Temperature Probe Length	10 ft (305 cm) Wiring Lead Included	Terminations	Sensor Addressing
NS-DTN7043-0	3 in. x 3 in. x 2 in. (76 mm x 76 mm x 51 mm)	Yes	4 in. (102 mm)	Yes	Screw Terminal Block	DIP Switch (204 to 211)
NS-DTN7043-2	3 in. x 3 in. x 2 in. (76 mm x 76 mm x 51 mm)	No	4 in. (102 mm)	Yes	Screw Terminal Block	DIP Switch (204 to 211)
NS-DTN7083-0	3 in. x 3 in. x 2 in. (76 mm x 76 mm x 51 mm)	Yes	8 in. (203 mm)	Yes	Screw Terminal Block	DIP Switch (204 to 211)
NS-DTN7083-2	3 in. x 3 in. x 2 in. (76 mm x 76 mm x 51 mm)	No	8 in. (203 mm)	Yes	Screw Terminal Block	DIP Switch (204 to 211)

Network Sensors with Fault Code Capability Ordering Information (Title 24 Models for Economizer Fault Detection Diagnostics [FDD])

Product Code Number	Size (mm), Height x Width	Vertical Wallbox-Mounted (WB)	LCD Display, °F/°C Scale Toggle	Screw Terminals	Address Switches	Temperature Adjustment: Setpoint (Set) or Warmer/ Cooler Dial (W/C)	Johnson Controls Logo	VAV Balancing Feature
NS-ATB7F03-0	80 x 80	Yes	Yes, Yes	Yes	Yes	Set	Yes	No
NS-ATB7F03-1	80 x 80	Yes	Yes, Yes	Yes	Yes	Set	No	No
NS-BTB7F03-0	80 x 120	Yes	Yes, Yes	Yes	Yes	Set	Yes	No
NS-BTB7F03-1	80 x 120	Yes	Yes, Yes	Yes	Yes	Set	No	No

NS Sensors with Fault Code Capability Error Codes

The fault indication comes through the Network Sensor Bus when a Network Sensor is used in the Zone. The LCD indicates the code number for all the required state of California Title 24 economizer fault conditions.

Display Text	California Title 24 Economizer Fault Condition	Possible Problem
EF1	Air temperature sensor failure/fault	Problem with one of the air temperature sensors. Check Outdoor Air, Return Air, or Supply Air sensors.
EF5	Not economizing when it should	The economizer is not using outdoor air when it should.
EF6	Economizing when it should	The economizer is allowing outdoor air inside when the conditions are not suitable for economizer operation.
EF8	Damper not modulating	The economizer damper is not able to modulate properly. Check damper, linkage to actuator, or the actuator.
EF9	Excess outdoor air	The economizer is allowing excess outdoor air inside.

The performance specifications are nominal and conform to acceptable industry standards. For applications at conditions beyond these specifications, consult the local Johnson Controls office. Johnson Controls shall not be liable for damages resulting from misapplication or misuse of its products. © 2017 Johnson Controls.

NS Series Network Sensors Catalog Page (Continued)

Technical Specifications

NS Series Network Zone Sensors—Temperature Only Models and Temperature and Humidity Models		
Supply Voltage		9.8 to 16.5 VDC; 15 VDC nominal (from SA bus)
Current Consumption		**Temperature only models with LCD display:** 21 mA maximum (non-transmitting)
		Temperature only models without LCD display: 13 mA maximum (non-transmitting)
		Temperature and humidity models with LCD display: 25 mA maximum (non-transmitting)
		Temperature and humidity models without LCD display: 17 mA maximum (non-transmitting)
Terminations		Modular jack or screw terminal block
Sensor Addressing		**NS-AHx7x0x-x, NS-AHx7003-0, NS-APx7x0x-0, NS-APB7003-0, NS-ATx7003-0, NS-ATB7F03-x, NS-BCN7004-x, NS-BHx7x0x-0, NS-BHx7003-0, NS-BPx700x-0, NS-BPB7003-0, NS-BTB7F03-x, NS-BTB7003-0, NS-BTN7003-0, and NS-BTP7003-0 Models:** DIP switch set from 200 to 203; factory set at 203
		All other models: Fixed address of 199
Wire Size		**Modular jack models:** 24 AWG or 26 AWG (0.5 or 0.4 mm diameter) recommended; three twisted pair (six conductors)
		Screw terminal block models: 18 to 22 AWG (1.0 to 0.6 mm diameter); 22 AWG (0.6 mm diameter) recommended
Communication Rate		**Auto-detect:** 9.6k, 19.2k, 38.4k, or 76.8k bps
Mounting		**Surface-mounted:** 80 x 80 mm
		Surface-mounted or vertical wallbox-mounted: 120 x 80 mm
Temperature Measurement Range		32.0°F/0.0°C to 104.0°F/40.0°C
Humidity Measurement Range		**Full range:** 0 to 100% RH
		Calibrated range: 10 to 90% RH
Temperature Sensor Type		Local 1k ohm Platinum Resistance Temperature Detector (RTD); Class A per IEC 60751
Humidity Sensor Type		Thin film capacitive sensor
Temperature Resolution (Models with LCD)		±0.5F°/±0.5C°
Temperature Accuracy		**NS Series Network Zone Sensor:** ±1.0F°/±0.6C°
		Temperature element only: 0.35F° at 70°F (0.2C° at 21°C)
Humidity Element Accuracy		**NS-APx700x-0 and NS-BPB700x-0 models:** ±2% RH for 20 to 80% RH; ±4% RH for 10 to 20% and 80 to 90% RH
		NS-AHx700x-x, NS-BHx700x-0, and NS-MHx700x-x models: ±3% RH for 20 to 80% RH; ±6% RH for 10 to 20% and 80 to 90% RH
Time Constant		10 minutes nominal at 10 fpm airflow
Default Temperature Setpoint Adjustment Range		**With LCD display:** 50.0°F/10.0°C to 86.0°F/30.0°C in 0.5° increments
		Without LCD display: ±5.0F°/±3.0C°
PIR Occupancy Sensor Motion Detection (Models with PIR Occupancy Sensor)		Minimum 94 angular degrees up to a distance of 15 ft (4.6 m); based on a clear line of sight
Ambient Conditions		**Operating:** 32 to 104°F (0 to 40°C); 10 to 90% RH, noncondensing; 85°F (29°C) maximum dew point
		Storage with LCD display: -4 to 140°F (-20 to 60°C); 5 to 95% RH, noncondensing
		Storage without LCD display: -40 to 158°F (-40 to 70°C); 5 to 95% RH, noncondensing
Compliance	**BACnet International**	BACnet Testing Laboratories™ (BTL) 135-2004 Listed BACnet Smart Sensor (B-SS) Note: Excludes the NS-ATV700x-0 and NS-BTV700x-0 models.
	United States	UL Listed, File E107041, CCN PAZX, Under UL 916, Energy Management Equipment; FCC Compliant to CFR 47, Part 15, Subpart B, Class A Note: Excludes the NS-ATA7001-0A and NS-ATA7002-0A models (Asia Only)
	Canada	UL Listed, File E107041, CCN PAZX7, Under CAN/CSA C22.2 No. 205, Signal Equipment; Industry Canada, ICES-003 Note: Excludes the NS-ATA7001-0A and NS-ATA7002-0A models (Asia Only)
CE	**Europe**	CE Mark – Johnson Controls declares that this product is in compliance with the essential requirements and other relevant provisions of the EMC Directive 2004/108/EC.
	Australia and New Zealand	RCM Mark, Australia/NZ Emissions Compliant
Accessory (Order Separately)		**NS-WALLPLATE-0:** adapts an 80 x 80 mm NS Series Network Zone Sensor to a standard 80 x 120 mm wallbox
Shipping Weight		0.20 lb (0.09 kg)

NS Series Network Zone Sensors—Motion Detection Only Models (No Temperature or Humidity Sensing) (Part 1 of 2)	
Supply Voltage	9.8 to 16.5 VDC; 15 VDC nominal (from SA bus)
Current Consumption	13 mA maximum (non-transmitting)
Terminations	Modular jack or screw terminal block
Sensor Addressing (NS-MNN7003-0 Model)	DIP switch set from 200 to 203; factory set at 203

The performance specifications are nominal and conform to acceptable industry standards. For applications at conditions beyond these specifications, consult the local Johnson Controls office. Johnson Controls shall not be liable for damages resulting from misapplication or misuse of its products. © 2017 Johnson Controls.

NS Series Network Sensors Catalog Page (Continued)

NS Series Network Zone Sensors—Motion Detection Only Models (No Temperature or Humidity Sensing) (Part 2 of 2)		
Wire Size		**Modular jack model:** 24 AWG or 26 AWG (0.5 or 0.4 mm diameter) recommended; three twisted pair (six conductors)
		Screw terminal block model: 18 to 22 AWG (1.0 to 0.6 mm diameter); 22 AWG (0.6 mm diameter) recommended
Communication Rate		**Auto-detect:** 9.6k, 19.2k, 38.4k, or 76.8k bps
Mounting		**Surface-mounted or vertical wallbox-mounted:** 120 x 80 mm
PIR Occupancy Sensor Motion Detection		Minimum 94 angular degrees up to a distance of 15 ft (4.6 m); based on a clear line of sight
Ambient Conditions		**Operating:** 32 to 104°F (0 to 40°C); 10 to 90% RH, noncondensing; 85°F (29°C) maximum dew point
		Storage: -40 to 158°F (-40 to 70°C); 5 to 95% RH, noncondensing
Compliance	**BACnet International**	BACnet Testing Laboratories™ (BTL) 135-2004 Listed BACnet Smart Sensor (B-SS)
	United States	UL Listed, File E107041, CCN PAZX, Under UL 916, Energy Management Equipment; FCC Compliant to CFR 47, Part 15, Subpart B, Class A
	Canada	UL Listed, File E107041, CCN PAZX7, Under CAN/CSA C22.2 No. 205, Signal Equipment; Industry Canada, ICES-003
CE	**Europe**	CE Mark – Johnson Controls declares that this product is in compliance with the essential requirements and other relevant provisions of the EMC Directive 2004/108/EC.
	Australia and New Zealand	RCM Mark, Australia/NZ Emissions Compliant
Shipping Weight		0.24 lb (0.11 kg)

NS Series Network Zone Sensor—CO_2 Models		
Supply Voltage		**Non-isolated:** 20 to 30 VAC (18 to 30 VDC), Class 2 or Safety Extra-Low Voltage (SELV)
		Isolated: 9.8 to 16.5 VDC; 15 VDC nominal (from SA bus)
Current Consumption		**Non-isolated:** 22 mA average at 24 VAC; 28 mA average at 24 VDC
		Isolated: 5 mA maximum, non-transmitting (from SA bus)
Power Consumption		**Non-isolated:** less than 0.7 W average
Terminations		**Non-isolated supply:** screw terminal block
		SA bus: modular jack or screw terminal block
Sensor Addressing		DIP switch set from 212 to 219; factory set at 212
Wire Size		**Modular jack:** 24 AWG or 26 AWG (0.5 or 0.4 mm diameter) recommended; three twisted pair (six conductors)
		Screw terminal block: 18 to 22 AWG (1.0 to 0.6 mm diameter); 22 AWG (0.6 mm diameter) recommended
Communication Rate		**Auto-detect:** 9.6k, 19.2k, 38.4k, or 76.8k bps
CO_2 Measurement Range		0 to 2,000 ppm
CO_2 Sensing Accuracy		Plus or minus the sum of 40 ppm and 2.0% of the CO_2 reading at 77°F (25°C) and 978 hPa or an altitude of 1,000 ft/300 m Note: All accuracy specifications reflect the testing of the device using high-grade certified gases. This device is intended for an altitude range of 0 ft/0 m to 2,000 ft/600 m above sea level without compensation.
		Temperature dependence of output: -0.35% of the CO_2 reading per 1.8F°/1C° typical
		Pressure dependence of output: +0.15% of the CO_2 reading per 1 hPa typical
CO_2 Sensing Resolution		1 ppm
CO_2 Sensing Response Time		1 minute (0 to 90%)
CO_2 Sensing Warm-Up Time		Less than 1 minute; less than 10 minutes for full accuracy
CO_2 Sensing Long-Term Stability		Less than ±100 ppm over 5 years
Mounting		**Surface-mounted or vertical wallbox-mounted:** 120 x 80 mm
Ambient Conditions		**Operating:** 32 to 104°F (0 to 40°C); 10 to 90% RH, noncondensing; 85°F (29°C) maximum dew point; 700 to 1,200 hPa
		Storage: -40 to 158°F (-40 to 70°C); 0 to 95% RH, noncondensing
Compliance	**BACnet International**	BACnet Testing Laboratories™ (BTL) 135-2004 Listed BACnet Smart Sensor (B-SS)
	United States	UL Listed, File E107041 CCN PAZX, Under UL 916, Energy Management Equipment; FCC Compliant to CFR 47, Part 15, Subpart B, Class A
	Canada	UL Listed, File E107041, CCN PAZX7, Under CAN/CSA C22.2 No. 205, Signal Equipment; Industry Canada, ICES-003
CE	**Europe**	CE Mark – Johnson Controls declares that this product is in compliance with the essential requirements and other relevant provisions of the EMC Directive 2004/108/EC.
	Australia and New Zealand	RCM Mark, Australia/NZ Emissions Compliant
Shipping Weight		0.35 lb (0.16 kg)

The performance specifications are nominal and conform to acceptable industry standards. For applications at conditions beyond these specifications, consult the local Johnson Controls office. Johnson Controls shall not be liable for damages resulting from misapplication or misuse of its products. © 2017 Johnson Controls.

NS Series Network Sensors Catalog Page (Continued)

NS Series Network Zone Sensor—Flush-Mount Temperature Only Models		
Supply Voltage		9.8 to 16.5 VDC; 15 VDC Nominal (from SA bus)
Current Consumption		12 mA maximum (non-transmitting) per flush-mount network sensor
Terminations		Screw terminal block Note: Wire leads are field supplied and are not tinned.
Sensor Addressing		DIP switch set from 200 to 203; factory set at 203
Wire Size		18 to 22 AWG (1.0 to 0.6 mm diameter); 22 AWG (0.6 mm diameter) recommended; 10 ft (304.8 cm) wiring lead Included with the unit
Communication Rate		**Auto-detect:** 9.6k, 19.2k, 38.4k, or 76.8k bps
Temperature Measurement Range		32.0°F/0.0°C to 104.0°F/40.0°C
Temperature Sensor Type		Local 1k ohm Platinum Resistance Temperature Detector (RTD); Class A per IEC 60751
Temperature Accuracy		**NS Series Network Zone Sensor:** ±1.0F°/±0.6C°
		Temperature Element Only: 0.35F° at 70°F (0.2C° at 21°C)
Ambient Conditions		**Operating:** 32 to 104°F (0 to 40°C); 10 to 90% RH, noncondensing; 85°F (29°C) Maximum Dew Point
		Storage: -40 to 158°F (-40 to 70°C); 5 to 95% RH, noncondensing
Compliance	**BACnet International**	BACnet Testing Laboratories™ (BTL) 135-2004 Listed BACnet Smart Sensor (B-SS)
	United States	UL Listed, File E107041, CCN PAZX, Under UL 916, Energy Management Equipment; FCC Compliant to CFR 47, Part 15, Subpart B, Class A
	Canada	UL Listed, File E107041, CCN PAZX7, Under CAN/CSA C22.2 No. 205, Signal Equipment; Industry Canada, ICES-003
CE	**Europe**	CE Mark – Johnson Controls declares that this product is in compliance with the essential requirements and other relevant provisions of the EMC Directive 2004/108/EC.
	Australia and New Zealand	RCM Mark, Australia/NZ Emissions Compliant
Shipping Weight		0.25 lb (0.11 kg)

NS Series Network Discharge Air Sensors		
Supply Voltage		9.8 to 16.5 VDC; 15 VDC nominal
Current Consumption		12 mA maximum (non-transmitting) per discharge air sensor
Terminations		Four color-coded wiring leads, stripped and tinned; factory-installed at the discharge air sensor screw terminal block
Sensor Addressing		DIP switch set from 204 to 211; factory set at 204
Wire Size		18 to 22 AWG (1.0 to 0.6 mm diameter); 22 AWG (0.6 mm diameter) recommended; 10 ft (305 cm) wiring lead included with the unit
Communication Rate		**Auto-detect:** 9.6k, 19.2k, 38.4k, or 76.8k bps
Mounting		**Duct-mounted:** 4 or 8 in. (102 or 203 mm) temperature probe length
Temperature Measurement Range		14°F/-10°C to 140°F/60°C
Temperature Sensor Type		Local 1k ohm Platinum Resistance Temperature Detector (RTD); Class A per IEC 60751
Temperature Accuracy		**NS Series Network Discharge Air Sensor:** ±1.0F°/±0.6C°
		Temperature element only: 0.35F° at 70°F (0.2C° at 21°C)
Ambient Conditions		**Operating:** 14 to 140°F (-10 to 60°C); 10 to 90% RH, noncondensing; 85°F (29°C) Maximum Dew Point
		Storage: -40 to 158°F (-40 to 70°C); 5 to 95% RH, noncondensing
Compliance	**BACnet International**	BACnet Testing Laboratories™ (BTL) 135-2004 Listed BACnet Smart Sensor (B-SS)
	United States	UL Listed, File E107041, CCN PAZX, Under UL 916, Energy Management Equipment; FCC Compliant to CFR 47, Part 15, Subpart B, Class A
	Canada	UL Listed, File E107041, CCN PAZX7, Under CAN/CSA C22.2 No. 205, Signal Equipment; Industry Canada, ICES-003
CE	**Europe**	CE Mark – Johnson Controls declares that this product is in compliance with the essential requirements and other relevant provisions of the EMC Directive 2004/108/EC.
	Australia and New Zealand	RCM Mark, Australia/NZ Emissions Compliant
Shipping Weight		**NS-DTN7043-x:** 1.15 lb (0.52 kg)
		NS-DTN7083-x: 1.17 lb (0.53 kg)

NS Series Network Sensors with Fault Code Capability	
Supply Voltage	9.8 to 16.5 VDC; 15 VDC nominal (from SA bus)
Current Consumption	21 mA maximum, non-transmitting (from SA bus)
Network Sensor Addressing	DIP switch set from 200 to 203; factory set at 203
Terminations	Screw terminal block
Screw Terminal Wire Size	18 to 22 AWG (1.0 to 6.0 mm Diameter); 22 AWG (0.6 mm diameter) recommended

The performance specifications are nominal and conform to acceptable industry standards. For applications at conditions beyond these specifications, consult the local Johnson Controls office. Johnson Controls shall not be liable for damages resulting from misapplication or misuse of its products. © 2017 Johnson Controls.

NS Series Network Sensors Catalog Page (Continued)

NS Series Network Sensors with Fault Code Capability		
Communication Rate		Auto-detect: 9.6k, 19.2k, 38.4k, or 76.8k bps
Temperature Measurement Range		32.0°F/0.0°C to 104.0°F/40.0°C
Temperature Sensor Type		Local Platinum Resistance Temperature Detector (RTD)
Temperature Resolution		±0.5F°/±0.5C°
Temperature Accuracy	**NS Series Network Sensor**	±1.0F°/±0.6C°
	Temperature Element Only	0.35F° at 70°F (0.2C° at 21°C)
Time Constant		10 minutes nominal at 10 fpm airflow
Default Temperature Setpoint Adjustment Range		50.0°F/10.0°C to 86.0°F/30.0°C in 0.5° increments
Ambient Conditions	**Operating**	32 to 104°F (0 to 40°C); 10 to 90% RH, noncondensing; 85°F (29°C) maximum dew point
	Storage	-4 to 140°F (-20 to 60°C); 5 to 95% RH, noncondensing
Compliance	**United States**	UL Listed, File E107041, CCN PAZX, Under UL 916, Energy Management Equipment
		FCC Compliant to CFR 47, Part 15, Subpart B, Class A
	Canada	UL Listed, File E107041, CCN PAZX7, Under CAN/CSA C22.2 No. 205, Signal Equipment
		Industry Canada, ICES-003
CE	**Europe**	CE Mark – Johnson Controls declares that this product is in compliance with the essential requirements and other relevant provisions of the EMC Directive 2004/108/EC.
	Australia and New Zealand	RCM Mark, Australia/NZ Emissions Compliant
Dimensions (Height x Width x Depth)		**NS-ATBF703-x:** 3-5/32 x 3-5/32 x 1-3/8 in. (80 x 80 x 35 mm) **NS-BTB7F03-x:** 4-23/32 x 3-5/32 x 1-3/8 in. (120 x 80 x 35 mm)
Shipping Weight		0.25 lb (0.11 kg)

The performance specifications are nominal and conform to acceptable industry standards. For applications at conditions beyond these specifications, consult the local Johnson Controls office. Johnson Controls shall not be liable for damages resulting from misapplication or misuse of its products. © 2017 Johnson Controls.

Code No. LIT-1900679
Issued September 26, 2011

PAGx00001FC0 NAE Standard Control Panel Assembly Mounted in a 16 in. x 20 in. Enclosure

Description

The PAGx00001FC0 is a prewired, preassembled standard control panel and enclosure that contains the Metasys® Network Automation Engine (NAE). These Web-based network controllers communicate using Information Technology (IT) and Internet languages while incorporating the communication technology of the building automation industry, including the BACnet® protocol, LONWORKS® network, and the N2 Bus.

The PAGx00001FC0 Control Panel is shipped complete, mounted in a 16 in. W x 20 in. H steel enclosure. In addition to the NAE, the assembly also contains a 5-port Ethernet switch and a power supply incorporating a 5 A circuit breaker, a 96 VA 120/24 VAC transformer, and two 120 VAC outlets.

Features

- consistent layout for all standard control panel solutions simplifies installation and commissioning
- panel prebuilt, pre-wired, and retested in an ISO-9002 manufacturing facility provides products of consistently high quality
- power supply with resettable circuit breaker and transformer provides high and low voltage protection
- 5-port switch simplifies installation and commissioning
- Network Automation Engine (NAE) speaks IT and internet language to web browsers and remote operations centers
- Network Automation Engine (NAE) monitors and supervises Heating, Ventilating, and Air Conditioning (HVAC) equipment; lighting; fire systems; security; and access control system



PAGx00001FC0 NAE Standard Control Panel Assembly Mounted in a 16 in. x 20 in. Enclosure

- Web Browser-Based User Interface allows access to system data in the NAE from any standard Web browser device connected to the network, including remote users connected by dial-up telephone or an Internet Service Provider (ISP)
- California Office of Statewide Health Planning and Development (OSHPD) Special Seismic Certification Preapproved control panel assembly meets standards for rigid and flexible mounting conditions to account for unit-mounted and remote-mounted application
- UL 508A Rated Control Panel and UL 50 Rated, Canadian Standards Association (CSA) Approved Enclosure meets local and national code requirements for US and Canada (cULus listed)

Ordering Information

Basic Control Panel Bill of Material

Quantity	Description
1	Enclosure: 16 in. W x 20 in. H x 6-5/8 in. D (406 mm W x 508 mm H x 168 mm D), Type 1, with keyed lock
1	MS-NAE45xx-2 or MS-NAE35xx-2: Network Automation Engine (NAE)
1	96 VA 120/24 VAC power supply with 5 A primary circuit protection and two 120 VAC outlets
1	5-Port Ethernet switch

Product Code Numbers

Product Code Number	Description/Options
PAGE00001FC0	MS-NAE4510-2 mounted in 16 in. W x 20 in. H x 6-5/8 in. D custom enclosure with 96 VA 120/24 VAC power supply and 5-port switch
PAGF00001FC0	MS-NAE4511-2 mounted in 16 in. W x 20 in. H x 6-5/8 in. D custom enclosure with 96 VA 120/24 VAC power supply and 5-port switch
PAGG00001FC0	MS-NAE4520-2 mounted in 16 in. W x 20 in. H x 6-5/8 in. D custom enclosure with 96 VA 120/24 VAC power supply and 5-port switch
PAGH00001FC0	MS-NAE4521-2 mounted in 16 in. W x 20 in. H x 6-5/8 in. D custom enclosure with 96 VA 120/24 VAC power supply and 5-port switch
PAGJ00001FC0	MS-NAE3510-2 mounted in 16 in. W x 20 in. H x 6-5/8 in. D custom enclosure with 96 VA 120/24 VAC power supply and 5-port switch
PAGK00001FC0	MS-NAE3511-2 mounted in 16 in. W x 20 in. H x 6-5/8 in. D custom enclosure with 96 VA 120/24 VAC power supply and 5-port switch
PAGL00001FC0	MS-NAE3520-2 mounted in 16 in. W x 20 in. H x 6-5/8 in. D custom enclosure with 96 VA 120/24 VAC power supply and 5-port switch
PAGM00001FC0	MS-NAE3521-2 mounted in 16 in. W x 20 in. H x 6-5/8 in. D custom enclosure with 96 VA 120/24 VAC power supply and 5-port switch
PAGS00001FC0	MS-NAE3514-2 mounted in 16 in. W x 20 in. H x 6-5/8 in. D custom enclosure with 96 VA 120/24 VAC power supply and 5-port switch
PAGT00001FC0	MS-NAE3515-2 mounted in 16 in. W x 20 in. H x 6-5/8 in. D custom enclosure with 96 VA 120/24 VAC power supply and 5-port switch
PAGU00001FC0	MS-NAE3524-2 mounted in 16 in. W x 20 in. H x 6-5/8 in. D custom enclosure with 96 VA 120/24 VAC power supply and 5-port switch
PAGV00001FC0	MS-NAE3525-2 mounted in 16 in. W x 20 in. H x 6-5/8 in. D custom enclosure with 96 VA 120/24 VAC power supply and 5-port switch

The performance specifications are nominal and conform to acceptable industry standards. For applications at conditions beyond these specifications, consult the local Johnson Controls® office. Johnson Controls, Inc. shall not be liable for damages resulting from misapplication or misuse of its products. © 2011 Johnson Controls, Inc.

PAGx00001FC0 NAE Standard Control Panel Assembly Mounted in a 16 in. x 20 in. Enclosure (Continued)

Technical Specifications

Product	PAGx00001FC0 NAE standard control panel mounted in a 16 in. x 20 in. enclosure
Wiring	24 VAC pre-wired from transformer secondary to NAE
Wire Size	Ground wire: 14 AWG; 24 VAC controller wires: 16 AWG
Enclosure Rating	Type 1
Finish	ANSI 61 gray polyester powder coating (inside and outside over phosphatized surfaces)
Ambient Operating Condition	32–122°F (0–50°C) 10–90% RH
Dimensions (Width x Height x Depth)	16 in. x 20 in. x 6-5/8 in. (406 mm x 508 mm x 168 mm)
Weight	40 lb (18.1 kg)
Ambient Storage Condition	-40–158°F (-40–70°C) 5–95% RH
Agency Compliance	Control panel: UL 508A rated (cULus); Enclosure: UL 50 rated, CSA approved OSHPD Special Seismic Certification Preapproval: OSP-0140-10 California Building Code (CBC) - 2010, International Building Code (IBC) - 2009 Seismic Performance Characteristics: $S_{DS}(g) = 2.26$, $z/h = 1.0$, $I_p = 1.5$

The performance specifications are nominal and conform to acceptable industry standards. For applications at conditions beyond these specifications, consult the local Johnson Controls office. Johnson Controls, Inc. shall not be liable for damages resulting from misapplication or misuse of its products. © 2011 Johnson Controls, Inc.

Functional Devices, Inc.
310 South Union Street
Russiaville, IN 46979
www.functionaldevices.com

Office: (765) 883-5538
Sales: (800) 888-5538
Fax: (765) 883-7505
Email: sales@functionaldevices.com

Manufacturing quality products in the United States of America since 1969

RIB24P

Enclosed Relay 20 Amp DPDT with 24 Vac/dc Coil



Functional Devices, Inc. A600D 2006

LISTED

MADE IN USA

 # Relays & Contact Type: One (1) DPDT Continuous Duty Coil
Expected Relay Life: 10 million cycles minimum mechanical
Operating Temperature: -30 to 140° F
Operate Time: 18mS
Relay Status: LED On = Activated
Dimensions: 2.30" x 3.20" x 1.80" with .50" NPT Nipple
Wires: 16", 600V Rated
Approvals: UL Listed, UL916, UL864, C-UL
California State Fire Marshal, CE
Housing Rating: Plenum, NEMA 1
Gold Flash: Yes
Override Switch: No

Contact Ratings:
20 Amp Resistive @ 300 Vac
20 Amp Resistive @ 28 Vdc
20 Amp Ballast @ 277-480 Vac
15 Amp Resistive @ 600 Vac
770 VA Pilot Duty @ 120 Vac
1158 VA Pilot Duty @ 240 Vac
1110 VA Pilot Duty @ 277 Vac
1640 VA Pilot Duty @ 480 Vac
3 HP @ 480-600 Vac
2 HP @ 240-277 Vac
1 HP @ 120 Vac

Coil Current:
100 mA @ 20 Vac
125 mA @ 24 Vac
50 mA @ 20 Vdc
50 mA @ 24 Vdc
70 mA @ 30 Vdc

Coil Voltage Input:
24 Vac/dc ; 50-60 Hz
Drop Out = 3 Vac / 3.8 Vdc
Pull In = 20 Vac / 20 Vdc

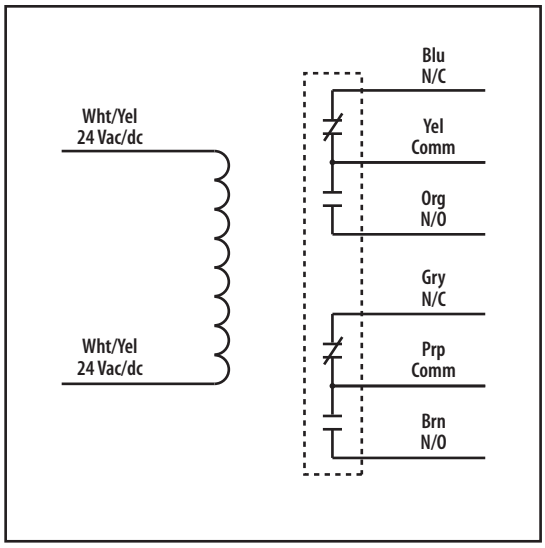

NOTES

UH-2.8: INTERPOSING RELAY FOR BLOWER-1,2,& 3 STATUS MONITORING

Functional Devices, Inc.
310 South Union Street
Russiaville, IN 46979
www.functionaldevices.com

Office: (765) 883-5538
Sales: (800) 888-5538
Fax: (765) 883-7505
Email: sales@functionaldevices.com

Manufacturing quality products in the United States of America since 1969

RIBU1C

Enclosed Relay 10 Amp SPDT with 10-30 Vac/dc/120 Vac Coil



Functional Devices, Inc. A600D 2006

c UL us LISTED

MADE IN USA

 # Relays & Contact Type: One (1) SPDT Continuous Duty Coil
Expected Relay Life: 10 million cycles minimum mechanical
Operating Temperature: -30 to 140° F
Operate Time: 20mS
Relay Status: LED On = Activated
Dimensions: 1.70" x 2.80" x 1.50" with .50" NPT nipple
Wires: 16", 600V Rated
Approvals: UL Listed, UL916, UL864, UL924, C-UL California State Fire Marshal, CE
Housing Rating: Plenum, NEMA 1
Gold Flash: Yes
Override Switch: No

Contact Ratings:
10 Amp Resistive @ 120-277 Vac
10 Amp Resistive @ 28 Vdc
480 VA Pilot Duty @ 240-277 Vac
480 VA Ballast @ 277 Vac
600 Watt Tungsten @ 120 Vac N/O
240 Watt Tungsten @ 120 Vac N/C
1/3 HP for N/O @ 120-240 Vac
1/6 HP for N/C @ 120-240 Vac
1/4 HP for N/O @ 277 Vac
1/8 HP for N/C @ 277 Vac

Coil Current:

30 mA @ 10 Vac	12 mA @ 10 Vdc
32 mA @ 12 Vac	14 mA @ 12 Vdc
42 mA @ 24 Vac	16 mA @ 24 Vdc
50 mA @ 30 Vac	18 mA @ 30 Vdc
25 mA @ 120 Vac	

Coil Voltage Input:
10-30 Vac/dc ; 120 Vac ; 50-60 Hz
Drop Out = 2.1 Vac / 2.8 Vdc
Pull In = 9 Vac / 10 Vdc

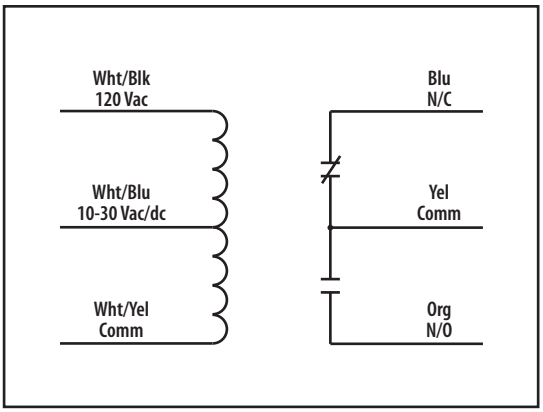



RIBU1C-RD
» Red housing



RIBU1C-N4
» NEMA 4X housing

NOTES

1. HWS: BOILER ENABLE
2. GENERATOR: TEMP ALARM SIGNAL
3. AHU-2: ECONOMIZER SIGNAL
4. CUH-1.1: INTERLOCK WIRING
5. RADIATORS (E-WF-1& WF-1): INTERLOCK WIRNG
6. BUILDING LOW TEMP ALARM: LOW LIMIT ALARM SIGNAL
7. MISC SYSTEM: ALARMS TO PLC

(PANEL MOUNT)
AHU-2: UNIT ENABLE
AHU-3: EF HISPEED, LOSPEED, SF HISPEED, LOSPEED, SDR

IDEC RELAY SOCKETS
SH, SJ, SR SERIES

IDEC

DESCRIPTION

The **SH** and **SR Series** of IDEC relay sockets are for use with the IDEC **RH / RR Series** relays and **RTE Series** timers. The **SH** and **SR Series** include both blade and pin style sockets and are available for one, two, three and four pole relays. The **SH** and **SR** sockets can be DIN rail or surface mounted. The **SJ Series** of IDEC relay sockets are for use with the IDEC **RJ1S** and **RJ2S Series** relays. They can be DIN rail or surface mounted.


SJ1S, SJ2S


SH1B-05

FEATURES

- ***Use with IDEC RH / RR / RJ relays and RTE timers***
- ***Screw terminals with captive wire clamp***
- ***Surface or DIN rail mount***
- ***UL recognized, CSA certified and CE approved***


SH2B-05


SH3B-05


SH4B-05


SR2P-05


SR2P-06


SR3P-06


SR3B-05

SPECIFICATIONS

Model	Socket Type	Rated Voltage	Rated Current	Hold Down Clip or SpringWire Size	Wire Size	Weight	Approvals
SJ1S-05B	Blade, DIN rail or surface mount	250V	12A	Lever: SJ9Z-C1 (provided)	Two 14 AWG	0.06 lb (0.03 kg)	UL recognized File #E62437, CSA certified File #LR84913, CE
SJ2S-05B	Blade, DIN rail or surface mount	250V	8A	Lever: SJ9Z-C1 (provided)	Two 14 AWG	0.07 lb (0.034 kg)	UL recognized File #E62437, CSA certified File #LR84913, CE
SH1B-05	Blade, DIN rail or surface mount	250V	10A	Spring: SYS-02F1; Clip: SFA-101, SFA-202	Two 12 AWG	0.06 lb (0.03 kg)	UL recognized File #E62437, CSA certified File #LR35144e, CE
SH2B-05	Blade, DIN rail or surface mount	300V	10A	Spring: SY4S-02F1; Clip: SFA-101, SFA-202	Two 12 AWG	0.10 lb (0.05 kg)	UL recognized File #E62437, CSA certified File #LR35144e, CE
SH3B-05	Blade, DIN rail or surface mount	300V	10A	Spring: SH3B05F1; Clip: SFA-101, SFA-202	Two 12 AWG	0.13 lb (0.06 kg)	UL recognized File #E62437, CSA certified File #LR35144e, CE
SH4B-05	Blade, DIN rail or surface mount	300V	10A	Spring: SH4B-02F1; Clip: SFA-101, SFA-202	Two 12 AWG	0.16 lb (0.07 kg)	UL recognized File #E62437, CSA certified File #LR35144e, CE
SR2P-05	8-Pin DIN rail or surface mount	300V	10A	Spring: SR2B-02F1 (RR2P only); Clip: SFA-203 (RTE-P1 only)	Two 12 AWG	0.10 lb (0.05 kg)	UL recognized File #E62437, CSA certified File #LR35144e, CE
SR2P-06	8-Pin, DIN rail or surface mount	300V	10A	Spring: SR2B-02F1 (RR2P only); Clip: SFA-202 (RTE-P1 only)	Two 12 AWG	0.10 lb (0.05 kg)	UL recognized File #E62437, CSA certified File #LR35144e, CE
SR3P-06	11-Pin, DIN rail or surface mount	300V	10A	Spring: SR3B-02F1 (RR only); Clip: SFA-202 (RTE-P2 only)	Two 12 AWG	0.13 lb (0.06 kg)	UL recognized File #E62437, CSA certified File #LR35144e, CE
SR3B-05	Blade, DIN rail or surface mount	300V	10A	Spring: SR3B-02F1 (RR3PA only); Clip: SFA-202 (RTE-P2 only)	Two 12 AWG	0.14 lb (0.06 kg)	UL recognized File #E62437, CSA certified File #LR35144e, CE

IDEC RELAY SOCKETS

SH, SJ, SR SERIES

DIMENSIONS

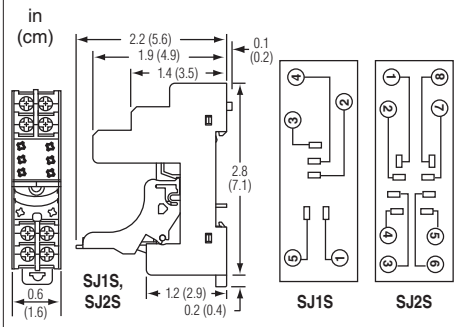

SJ1S, SJ2S

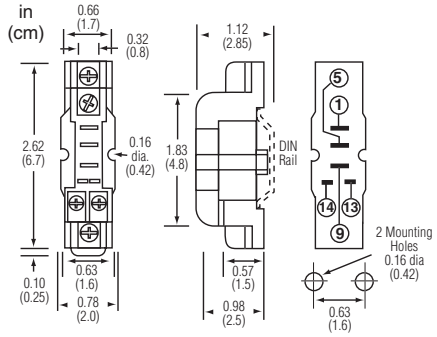

SH1B-05

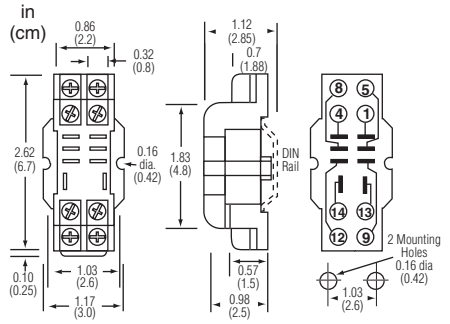

SH2B-05

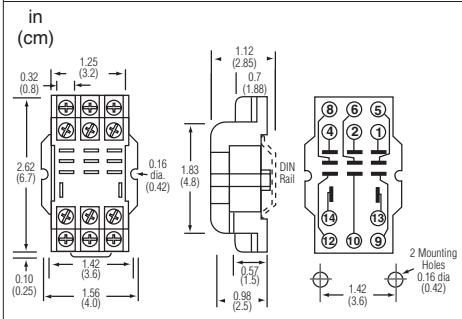

SH3B-05

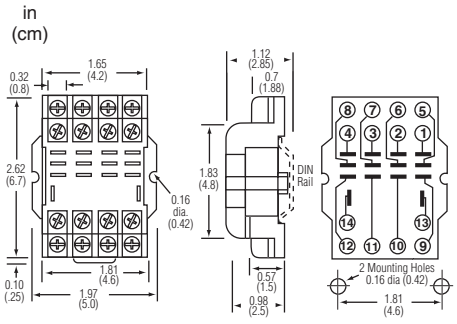

SH4B-05

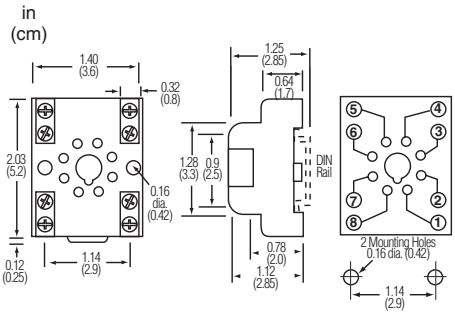

SR2P-05

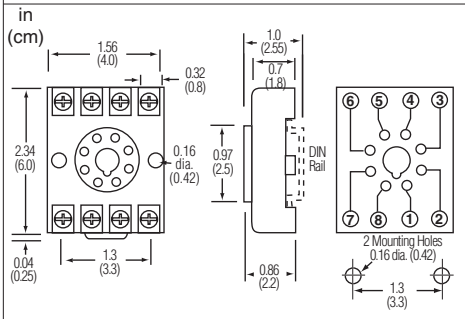

SR2P-06

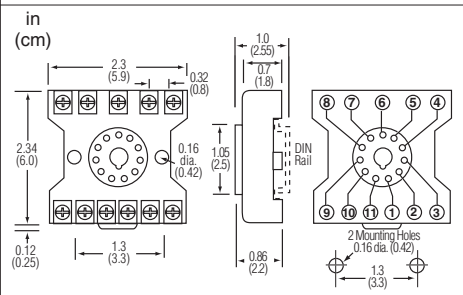

SR3P-06

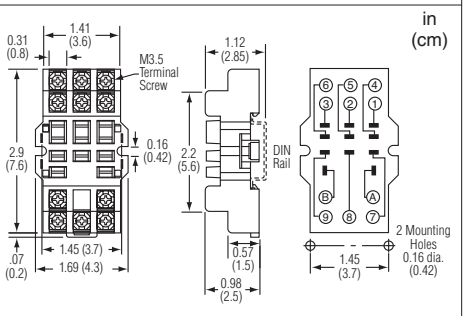

SR3B-05

ORDERING INFORMATION

MODEL	DESCRIPTION
SH1B-05	Relay socket, SPDT blade type, DIN/surface mount
SH2B-05	Relay socket, DPDT blade type, DIN/surface mount
SH3B-05	Relay socket, 3PDT blade type, DIN/surface mount
SH4B-05	Relay socket, 4PDT blade type, DIN/surface mount
SJ1S-05B	Relay socket, SPDT blade type, DIN/surface mount
SJ2S-05B	Relay socket, DPDT blade type, DIN/surface mount
SR2P-05	Relay socket, DPDT pin type, DIN/surface mount
SR2P-06	Relay socket, DPDT pin type, DIN/surface mount
SR3B-05	Relay socket, three-pole blade type, DIN/surface mount
SR3P-06	Relay socket, 3PDT pin type, DIN/surface mount

RELATED PRODUCTS		PAGE
DIN-3F, BAM-1000	DIN rail	**860**
RH, RJ, RR series	Relay	**1121**
RTE Series	Time delay relay	**1158**

Code No. LIT-1922255
Issued May 2018

T22/T25/T26 Series Line Voltage Wall Thermostat (Heating, Cooling, or Heating and Cooling) Catalog Page

Description

For line voltage control of residential, commercial, or industrial heating or year-round air conditioning. Heat or cold anticipators are not required. The liquid-charged temperature sensing element and highly efficient diaphragm and leverage provide close temperature control.

Refer to the following documents for important product application information:

- *T22 Series Line Voltage Thermostats with Selector Switch Product Bulletin (LIT-125630)*
- *T25 Two-Stage Room Thermostat Product Bulletin (LIT-125640)*
- *T26 Series Line Voltage Thermostats Product Bulletin (LIT-125645)*



T22 Series Line Voltage Wall Thermostat



T25 Series Line Voltage Wall Thermostat



T25 Series Line Voltage Wall Thermostat

Features

- attractive beige colored, high-impact plastic enclosure (T26 Series)
- close differential without the need for anticipators
- bi-metal thermometer supplied as standard except where indicated
- equipped with adjustable dial stops (T26 Series)

Specifications

Temperature range is 40 to 90°F (5 to 30°C), except energy conservation models.

Accessories

- replacement knobs and faceplates
- for double trim plate for mounting two T22s or T26s

Repair Information

If the T22/T25/T26 Series Line Voltage Wall Thermostat (Heating, Cooling, or Heating and Cooling) fails to operate within its specifications, replace the unit. For a replacement thermostat, contact the nearest Johnson Controls representative.

Applications

Use for line voltage control of heating and cooling equipment.

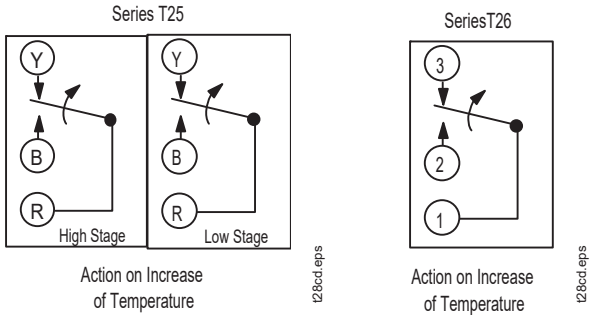

T25, T26 Series Action Diagrams

RADIATORS LINE T-STAT(E-WF-1, WF-1), UH, CUH

The performance specifications are nominal and conform to acceptable industry standards. For applications at conditions beyond these specifications, consult the local Johnson Controls office. Johnson Controls shall not be liable for damages resulting from misapplication or misuse of its products. © 2018 Johnson Controls.

T22/T25/T26 Series Line Voltage Wall Thermostat (Heating, Cooling, or Heating and Cooling) Catalog Page (Continued)

Selection Chart

Product Code Number[1]	Type of Adjustment	Application	Selector Switch	Differential Approximately C° (F°)		Shipping Wt. (lb)
				Heating	Cooling	
Heating						
T22AAA-1C	Knob	Single-Pole, Single-Throw (SPST)	Off-Auto	1-3/4 (1)	–	1.3
T22ABC-1C			Auto-Off-Fan			
T22ABC-3C	Concealed					
T22BBC-1C	Knob	SPST, medium duty		3 (1.7)		
T22CBC-1C		SPST, heavy duty				
T22CBC-3C	Concealed					
T26A-14C (No Thermometer)	Knob	SPST, Energy Conservation Heating model, max. setting 75°F (24°C)	None	2 (1.1)		1.0
T26A-15C (No Thermometer)		SPST, Energy Conservation Heating model, max. setting 65°F (18°C)				
Cooling						
T22JAA-1C	Knob	SPST	Off-Auto	–	2-1/4 (1.3)	1.3
T22JCC-1C			Auto-Off-Fan			
T26J-7C (No Thermometer)		SPST, Energy Conservation Cooling model, min. setting 75°F (24°C)	None			
T26J-9C (No Thermometer)		SPST, Energy Conservation Cooling model, min. setting 78°F (26°C)			2 (1.1)	1.0
Heating and Cooling						
T22SDA-1C	Knob	Single-Pole, Double-Throw (SPDT), permits system shutdown at the thermostat	Off-Auto	1-3/4 (1)	2-1/4 (1.3)	1.3
T22SEB-1C		SPDT, used when the same device controls heating and cooling	Heat-Off-Cool			
T22SFB-1C[2]		SPDT, used to control separate loads on heating and cooling				
T22TFB-1C[2]		SPDT, heavy duty, used to control separate loads on heating and cooling		3 (1.7)	3 to 4 (1.7 to 2.2)	
T26S-18C[3]		SPDT	None	1-3/4 (1)	2-1/4 (1.3)	1.0
T26T-3C[2]		SPDT, heavy duty		3 (1.7)	3 to 4 (1.7 to 2.2)	
Two-Stage						
T25A-1C	Knob	Two SPDT switches Two-stage heating, cooling or one-stage heating and one-stage cooling	None	1-3/4 (1)	2-1/4 (1.3)	1.5
T25A-16C	Concealed			3 (1.7) between stages		

1. For the thermostat guard, refer to *G Series Thermostat and Humidistat Guards Catalog Page (LIT-1922145 (LIT-1922145).*
2. Can also be used where one unit provides both heating and cooling by adding a jumper between terminals 2 and 3. Refer to *Typical Wiring Diagram and Electrical Ratings for Line Voltage Thermostats (LIT-1922600). Catalog Page [LIT-1922600*
3. Includes a faceplate for horizontal mounting. The plate is for on-the-job installation over a vertical plate. Can field-convert to other configurations.
   The T26S-18 is a universal replacement for Honeywell T451A, -B, T651A; White-Rodgers 179-1, 180-1, 181-1, 182-101, -102; Robertshaw® TA500, TH71, -72, -79, -500, TX550.
   T26T-3 replaces: Honeywell T4051A, -B, T6051A; White-Rodgers 151-6, 152-9, 159-3, -5.

The performance specifications are nominal and conform to acceptable industry standards. For applications at conditions beyond these specifications, consult the local Johnson Controls office. Johnson Controls shall not be liable for damages resulting from misapplication or misuse of its products. © 2018 Johnson Controls.

AHU-1: DA DUCT,HEAT REC EA & HEAT REC SA, WITH LT-A NEXT TO PREHEAT COIL,PREHEAT TEMP
CF-1, CF-2: W/LT-A IN DA DUCT,
HRV-1 DA, PREHEAT

Code No. LIT-1922230
Issued April 2, 2001

TE-6001 Series

Hardware Assemblies for TE-6000 Sensors

Description

TE-6001 hardware assemblies are used in conjunction with the TE-6000 Series elements in a wide variety of temperature-sensing applications.

Repair Information

If the TE-6001 Series Hardware Assemblies for TE-6000 Sensors fail to operate within their specifications, replace the unit. For replacement assemblies, contact the nearest Johnson Controls® representative.

Applications

The TE-6001 assemblies used in conjunction with the TE-6000 sensors cover a wide range of sensing applications including:

- duct
- immersion
- dew point
- outside air
- room

There are also two additional TE-6001 assemblies (TE-6001-961 and TE-6001-962), which are available for auxiliary pushbutton and toggle switch applications.

Selection Chart

Code Number	Description
TE-6001-1	Duct temperature element holder with handi-box
TE-6001-2	Housing for outside air temperature sensing element
TE-6001-3	Packing nut and fittings for use with WZ-1000 wells in immersion well applications
TE-6001-4	Single/dual element holder for TE-6000 elements in room temperature sensing applications
TE-6001-5	Dew point sensor kit
TE-6001-6	10 adhesive mounting pads for use with T-4100, T-4110
TE-6001-7	10 clips for use with T-4002/4003 and H-4100/5100
TE-6001-8	Mounting bracket for use with TE-6100 and TE-6300 averaging sensors
TE-6001-11	Duct temperature and humidity element holder (without the handi-box)
TE-6001-961	Momentary pushbutton switch
TE-6001-962	Maintained toggle switch

Accessories (T-4000 Plastic Covers For TE-6001-4)

Code Number	Description	
T-4000-2139	Horizontal	Without setpoint window or thermometer, with JCI logo, silver faceplate
T-4000-2140		Without setpoint window, with F/C thermometer and JCI logo, silver faceplate
T-4000-2639		Concealed setpoint, without thermometer, with JCI logo, gold faceplate
T-4000-2640		Concealed setpoint, with thermometer and JCI logo, gold faceplate
T-4000-2138	Horizontal or Vertical	Without setpoint window, thermometer, or JCI logo, with silver faceplate
T-4000-2144	Vertical	Without setpoint window or thermometer, with JCI logo and silver faceplate

TE-6001-1 Description

The TE-6001-1 duct temperature element holder is used with TE-6000 elements in duct insertion applications. The TE-6001-1 is designed to hold one or two temperature sensors. A handi-box is supplied with the element holder.



TE-6001-1 Duct Temperature Element Holder

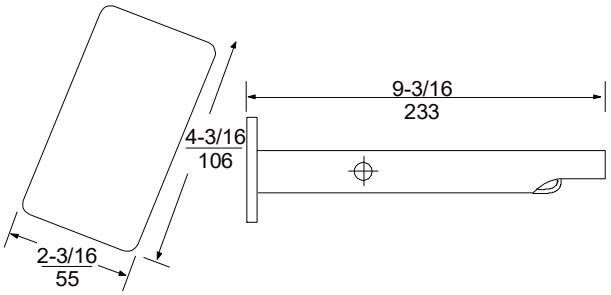

TE-6001-1 Duct Temperature Element Holder Dimensions, (in./mm)

The performance specifications are nominal and conform to acceptable industry standards. For applications at conditions beyond these specifications, consult the local Johnson Controls office. Johnson Controls, Inc. shall not be liable for damages resulting from misapplication or misuse of its products. © 2012 Johnson Controls, Inc.

Hardware Assemblies for TE-6000 Sensors (Continued)

TE-6001-2 Description

The TE-6001-2 is a metal housing used with the TE-6000 temperature element in applications requiring outside air temperature sensing. A factory-mounted plastic clip is provided to hold the TE-6000 sensor in place.



TE-6001-2 Metal Housing

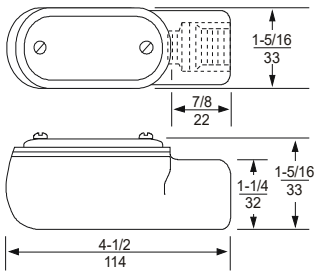

TE-6001-2 Metal Housing Dimensions, (in./mm)

TE-6001-3 Description

The TE-6001-3 packing nut, fittings, and handi-box are used with WZ-1000-2, -4 and -5 immersion wells to house TE-6000 elements in well insertion applications.

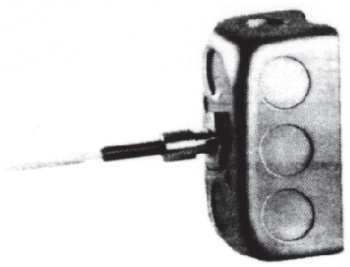

TE-6001-3 Kit

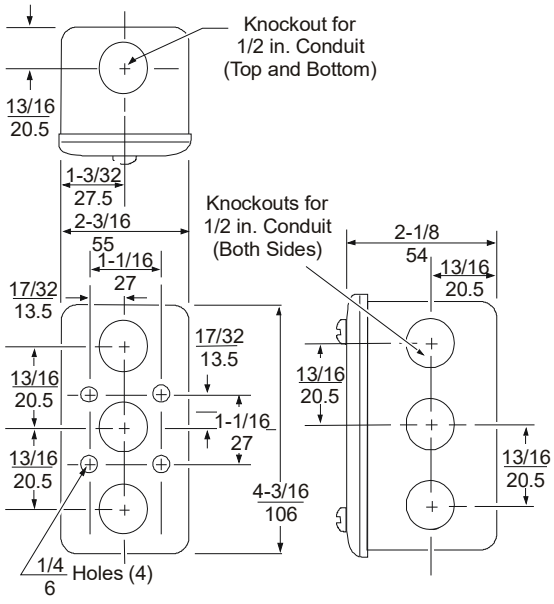

TE-6001-3 Kit Dimensions, (in./mm)

TE-6001-4 Description

The TE-6001-4 temperature element holder is used with TE-6000 sensors in room-sensing applications. The TE-6001-4 can hold up to two temperature sensors. A mounting bracket and wallplate adapter are supplied. A T-4000 cover is required and must be ordered separately. See the *Accessories* table.



TE-6001-4 Temperature Element Holder

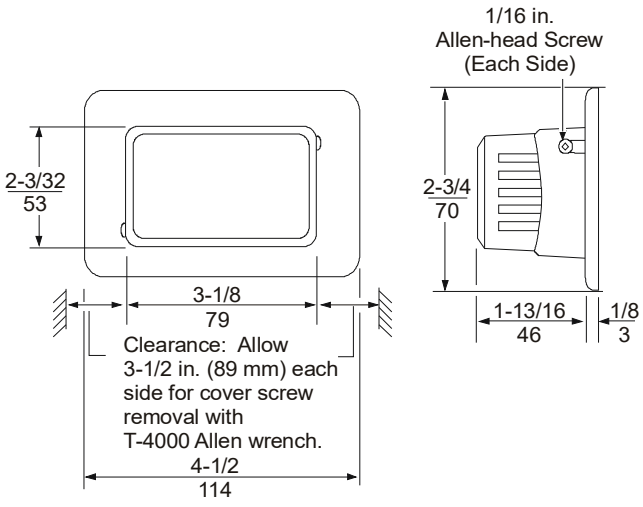

TE-6001-4 Temperature Element Holder Dimensions, (in./mm)

The performance specifications are nominal and conform to acceptable industry standards. For applications at conditions beyond these specifications, consult the local Johnson Controls office. Johnson Controls, Inc. shall not be liable for damages resulting from misapplication or misuse of its products. © 2012 Johnson Controls, Inc.

Hardware Assemblies for TE-6000 Sensors (Continued)

TE-6001-8 Mounting Bracket Description

The TE-6001-8 Mounting Bracket is used with the TE-6100 and TE-6300 averaging sensors to maintain the minimum bend radius recommended for these sensors. It mounts to duct work with a single sheet metal screw.

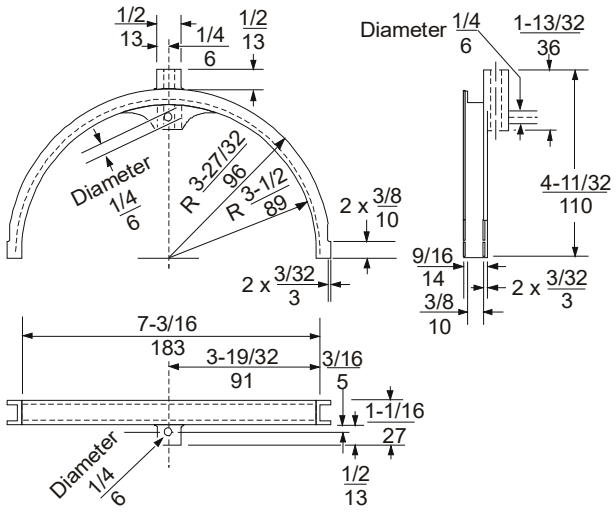

TE-6001-8 Mounting Bracket Dimensions, (in./mm)

TE-6001-11 Description

The TE-6001-11 duct temperature holder is used with the TE-6000 sensors. It has a rigid aluminum support that extends into the duct to hold one or two TE-6000 temperature sensing elements.



TE-6011-1 Duct Temperature Holder

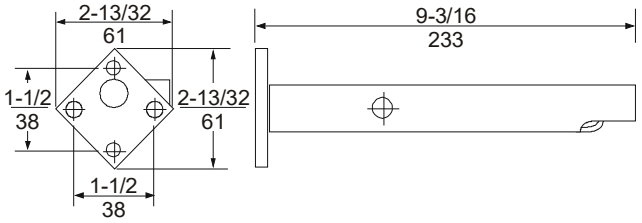

TE-6001-11 Duct Temperature Holder Dimensions, (in./mm)

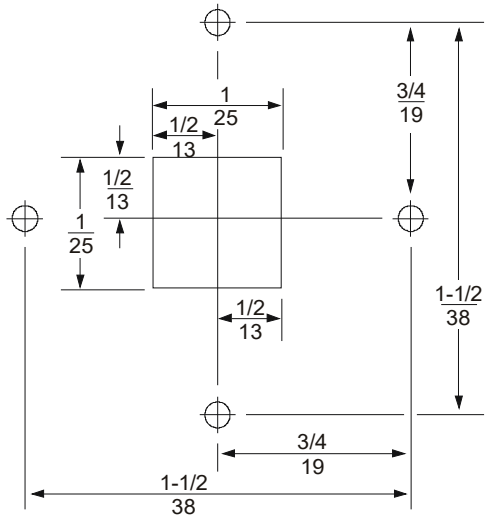

Installing the TE-6001-1 and TE-6001-11 Products

The performance specifications are nominal and conform to acceptable industry standards. For applications at conditions beyond these specifications, consult the local Johnson Controls office. Johnson Controls, Inc. shall not be liable for damages resulting from misapplication or misuse of its products. © 2012 Johnson Controls, Inc.

Code No. LIT-1900217
Issued February 2017

TE-6300 Series Temperature Sensors Catalog Page

Description

The TE-6300 Temperature Sensor line provides economical solutions for a wide variety of temperature sensing needs, including wall-mount, outdoor-air, duct, strap-mount, well-insertion, duct-averaging, and VAV Modular Assembly (VMA) flange-mount duct-probe applications. The TE-6300 line offers both a metal and a plastic enclosure for the most popular models.

Sensors are available in the following types:

- 1k ohm thin-film nickel
- 1k ohm nickel averaging
- 1k ohm thin-film platinum
- 100 ohm platinum equivalent averaging
- 1k ohm platinum equivalent averaging
- 2.2k (2,252) ohm thermistor
- 10k ohm thermistor, Johnson Controls® Type II

Refer to the TE-6300 Series Temperature Sensors Product Bulletin (LIT-216320) for important product application information.

Features and Benefits

Each sensor is packaged with the necessary mounting accessories to maximize ordering and installation ease and to reduce both commissioning time and cost.

- **Full Line of Versatile Sensors—**Supports all your temperature sensing needs from a single supplier: wall-mount, outdoor-air, duct, duct-averaging, strap-mount, well-insertion, and flange-mount duct-probe.
- **Single Assembly Ordering—**Simplifies ordering; provides a complete assembly in one box.
- **Models Featuring an Integral National Pipe Thread (NPT) Adaptor—I**ncrease sensor connection strength, which eliminates the need for a special adaptor.
- **Models with a Stainless Steel Sensor Probe—**Protect the sensor while increasing corrosion resistance.
- **Metal Enclosure (TE-63xxE, TE-63xxM, and TE-63xxV Models)—**Meets plenum requirements.
- **Models Featuring a Retainer for the Sensor Holder—**Allow you to lock the sensor holder into the conduit box.
- **Brushed Stainless Steel Mounting Plate—**Offers a durable, aesthetically pleasing design.
- **Low Profile Flush Mount Design (TE-63xxF Models)—**Provides a tamper-proof installation ideally suited for schools, sporting complexes, retailers, prisons, and more.

All TE-6300 Series Temperature Sensors are two-wire, passive, resistance-output devices.

TE-63xxA Models

The TE-63xxA (adjustable length) models:

- provide a thermoplastic mounting flange and gland nut to adjust the length of the probe
- include two hex-head self-drilling screws for mounting
- come equipped with a 10 ft (3 m) plenum-rated cable with 1/4 in. (6.35 mm) internal thread insulated quick-connect terminations on leads

TE-63xxE Models

The TE-63xxE (economizer mount) models:

- provide a stainless steel mounting flange
- include two hex-head self-drilling screws for mounting
- meet UL 1995 plenum use requirements

TE-63xxF Models

The TE-63xxF (flush mount) models:

- provide a low profile when installed in an electrical box
- thermally isolate sensor from the wall with a foam pad
- offer a rugged stainless steel cover
- provide 22 AWG (0.6 mm diameter) lead wires with low voltage installation

TE-63xxM Models

The TE-63xxM (metal enclosure) models:

- come with a corrosion-protected steel enclosure with a 0.88 in. (22 mm) hole for a 1/2 in. (12.7 mm) conduit fitting
- include two hex-head self-drilling screws for mounting the duct and duct-averaging models
- offer either a direct-mount or 1/2-14 NPT threaded well sensor holder for mounting in TE-6300W Series Thermowells (well models; order the thermowell separately)
- provide optional well sensor holders (order separately) to mount duct models in thermowells
- meet UL 1995 plenum use requirements
- offer optional accessory kit (order separately) to replace plastic hole plug and wiring bushing to meet International Mechanical Code (IMC) requirements

TE-63xxP Models

The TE-63xxP (plastic enclosure) models:

- provide a thermoplastic conduit box with 1/2-14 internal NPT for connecting to conduit
- provide aluminum mounting plate and 1/2-14 internal NPT hub mounting options for the duct and duct-averaging models
- use the 1/2-14 internal NPT to mount the outdoor air models directly to rigid conduit
- include sensor holders to mount duct models in thermowells (order thermowell separately)
- offer an optional accessory metal cover and gasket kit (order separately) to replace the plastic cover to meet UL 1995 plenum use requirements
- include a replaceable sensing probe on duct-probe, outdoor-air, and well-insertion models

TE-6300 Series Temperature Sensors



TE-63x4P Wall Mount Models

The TE-63x4P (plastic enclosure) models:

- come with a white thermoplastic ventilated cover with a brushed aluminum face plate and a steel mounting plate for surface mounting
- include faceplates for both horizontal and vertical mounting
- offer an accessory mounting kit for mounting to a standard electrical box
- offer optional covers

TE-63xS Models

The TE-63xS (strap-mount) models:

- provide a 1/4 in. (6.35 mm) diameter stainless steel probe without an enclosure
- include three cable ties for mounting to pipe up to 2-5/8 in. (67 mm) in diameter
- come equipped with a 10 ft (3 m) plenum-rated cable
- meet UL 1995 plenum use requirements
- offer an accessory mounting kit for mounting to a pipe up to 11 in. (280 mm) in diameter

TE-63xxV Models

The TE-63xxV (VAV flange mount) models:

- provide a stainless steel mounting flange with two hex-head self-drilling mounting screws
- come equipped with a 10 ft (3 m) plenum-rated cable with 1/4 in. (6.35 mm) internal thread insulated quick-connect terminations on leads
- meet UL 1995 plenum use requirements

Repair Information

If the TE-6300 Series Temperature Sensor fails to operate within its specifications, replace the unit. For information on replacement temperature sensors and replacement sensor probes, refer to the TE-6300 Series Temperature Sensors Product Bulletin (LIT-216320).

The performance specifications are nominal and conform to acceptable industry standards. For applications at conditions beyond these specifications, consult the local Johnson Controls office. Johnson Controls shall not be liable for damages resulting from misapplication or misuse of its products. © 2017 Johnson Controls.

TE-6300 Series Temperature Sensors Catalog Page (Continued)

Selection Chart

TE-6300 Temperature Sensor Models (Part 1 of 2)

Sensor	Mounting Style	Probe Length in. (mm)	Product Code Number
Nickel (1k ohm)	Adjustable	8 (203)	TE-6311A-1
	Averaging[1]	8 ft (2.4 m)	TE-6315M-1
			TE-6315P-1
			TE-6315V-2
		17 ft (5.2 m)	TE-6316M-1
			TE-6316P-1
			TE-6316V-2
	Duct	4 (102)	TE-631GM-1
		8 (203)	TE-6311M-1
			TE-6311P-1
		18 (457)	TE-631JM-1
	Flange (VAV)	4 (102)	TE-631GV-2
		8 (203)	TE-6311V-2
	Flush	N/A	TE-6310F-0
			TE-6310F-1
	Outdoor air	3 (76)	TE-6313P-1
	Strap-mount	3 (76)	TE-631S-1
	Wall[2]	N/A	TE-6314P-1
	Well	6 (152)	TE-631AM-1[3]
			TE-631AM-2
			TE-631AP-1
		8 (203)	TE-6312M-1
			TE-6312P-1
Platinum (1k ohm)	Adjustable	8 (203)	TE-6351A-1
	Duct	4 (102)	TE-635GM-1
		8 (203)	TE-6351M-1
			TE-6351P-1
		18 (457)	TE-635JM-1
	Flange (VAV)	4 (102)	TE-635GV-2
		8 (203)	TE-6351V-2
	Flush	N/A	TE-6350F-0
			TE-6350F-1
	Outdoor air	3 (76)	TE-6353P-1
	Strap-mount	3 (76)	TE-635S-1
	Wall[2]	N/A	TE-6324P-1
	Well	6 (152)	TE-635AM-1[3]
			TE-635AM-2
			TE-635AP-1
		8 (203)	TE-6352M-1
			TE-6352P-1

TE-6300 Temperature Sensor Models (Part 2 of 2)

Sensor	Mounting Style	Probe Length in. (mm)	Product Code Number
Platinum Equivalent	1k ohm Averaging[1]	10 ft (3 m)	TE-6327P-1
		20 ft (6.1 m)	TE-6328P-1
	100 ohm Averaging[1]	10 ft (3 m)	TE-6337P-1
		20 ft (6.1 m)	TE-6338P-1
Thermistor (2.2k ohm)	Adjustable	8 (203)	TE-6341A-1
	Duct	8 (203)	TE-6341P-1
	Flange (VAV)	4 (102)	TE-634GV-2
		8 (203)	TE-6341V-2
	Outdoor Air	3 (76)	TE-6343P-1
	Wall[2]	N/A	TE-6344P-1
	Well	6 (152)	TE-634AM-2
		8 (203)	TE-6342M-1
Thermistor (10k ohm) Type II	Adjustable	8 (203)	TE-6361A-1
	Duct	4 (102)	TE-636GM-1
		8 (203)	TE-6361M-1
			TE-6361P-1
		18 (457)	TE-636JM-1
	Flange (VAV)	4 (102)	TE-636GV-2
		8 (203)	TE-6361V-2
	Flange (economizer)	2 (51)	TE-6369E-2
		6 (152)	TE-636ME-2
		8 (203)	TE-6361E-2
		12 (305)	TE-636NE-2
	Flush	N/A	TE-6360F-0
			TE-6360F-1
	Outdoor air	3 (76)	TE-6363P-1
	Strap-mount	3 (76)	TE-636S-1
	Well	6 (152)	TE-636AM-1[3]
			TE-636AM-2
		8 (203)	TE-6362M-1

1. Two TE-6001-8 Element Holders come with the platinum equivalent averaging sensors. Order separately to use with a nickel averaging sensor.
2. Order the TE-1800-9600 Mounting Hardware separately to mount the wall unit to a wallbox.
3. TE-631AM-1, TE-635AM-1, and TE-636AM-1 include TE-6300-612 Threadless Brass Sensor Holder/Well Adaptor for retrofit to TE-6300W-103 or WZ-1000-5 Thermowells.

AHU-2: RA TEMP, CF-1, CF-2: DAT, HWS: OA-T
AHU-1: DA DUCT,HEAT REC EA & HEAT REC SA, PREHEAT TEMP
HRV-1 DA, PREHEAT

Optional Accessories (Part 1 of 2)

Product Code Number	Description
F-1000-182	Thermal conductive grease for element wells (8 oz. [0.23 kg])
T-4000-119	Allen head tool for wall mount cover screws (order in multiples of 30)
TE-1800-9600	Mounting hardware for mounting the wall-mount unit to a wall box
TE-6001-8	Averaging sensor mounting bracket (order in multiples of ten)
TE-6001-13	Metal cover and gasket kit (order in multiples of five)
TE-6300-101	12 in. (305 mm) 1k ohm nickel probe (cut to an appropriate length)[1]
TE-6300-103	1/2-14 NPT plastic sensor holder without retainer (order in multiples of ten)
TE-6300-105	12 in. (305 mm) 1k ohm platinum Class A probe (cut to an appropriate length)[1]
TE-6300-601	8 in. (203 mm) 1k ohm nickel probe
TE-6300-603	3 in. (76 mm) 1k ohm nickel probe
TE-6300-605	1/2-14 NPT threaded plastic sensor holder/well adaptor with retainer (order in multiples of ten)

The performance specifications are nominal and conform to acceptable industry standards. For applications at conditions beyond these specifications, consult the local Johnson Controls office. Johnson Controls shall not be liable for damages resulting from misapplication or misuse of its products. © 2017 Johnson Controls.

TE-6300 Series Temperature Sensors Catalog Page (Continued)

Optional Accessories (Part 2 of 2)

Product Code Number	Description
TE-6300-606	8 in. (203 mm) 2.2k ohm thermistor probe
TE-6300-607	3 in. (76 mm) 2.2k ohm thermistor probe
TE-6300-611	1/2-14 NPT threaded brass sensor holder/well adaptor (order in multiples of ten)
TE-6300-612	Threadless brass sensor holder/well adaptor (order in multiples of ten)
TE-6300-613	IMC kit with metal plugs and clamp connector (order in multiples of ten)
TE-6300-614	Cable tie mounting kit, 0.50 to 2.625 in. (12.7 to 66.7 mm) bundle diameter (order in multiples of ten)
TE-6300-615	Cable tie mounting kit, 11 in. (280 mm) maximum bundle diameter
TE-6300-616	8 in. (203 mm) 1k ohm platinum Class A probe
TE-6300-617	3 in. (76 mm) 1k ohm platinum Class A probe
TQ-6000-1	4 to 20 mA output transmitter for use with the 100 ohm platinum sensor
TE-6300W-101[2]	Thermowell, brass with copper bulb, 2.38 in. (60.5 mm) immersion depth, with thermal grease, direct mount, no adaptor required, for use with 6 in. (150 mm) probe model TE-63xAM-2
TE-6300W-102[2]	Thermowell, stainless steel, 2.38 in. (60.5 mm) immersion depth, without thermal grease, direct mount, no adaptor required, for use with 6 in. (150 mm) probe model TE-63xAM-2
TE-6300W-103	Thermowell, brass with copper bulb, 2.38 in. (60.5 mm) immersion depth, with thermal grease, threadless adaptor required, for use with 6 in. (150 mm) probe models TE-63xAM-1 (adaptor included) and TE-63xAP-1 (adaptor included)
TE-6300W-110	Thermowell, stainless steel, 4.50 in. (114.3 mm) immersion depth, without thermal grease, 1/2-14 NPT adaptor required, for use with 8 in. (200 mm) probe models TE-63x2M-1 (adaptor included) and TE-63x2P-1 (adaptor included)

1. Cut 12 in. (305 mm) probes to a minimum of 3 in. (76 mm).
2. Direct-mount thermowells TE-6300W-101 and TE-6300W-102 can be used only with the TE-6300M Sensors.

T-4000 Covers Available for the Wall Mount TE-63x4P Series

Product Code Number	Horizontal Johnson Controls Logo	Vertical Johnson Controls Logo	Thermometer, with °F/°C Scale	Faceplate/Cover Color
T-4000-2138[1]				Brushed aluminum/beige
T-4000-2139	■			
T-4000-2140	■		■	
T-4000-2144		■		
T-4000-2639	■			Brown and gold/beige
T-4000-2640	■		■	
T-4000-2644		■		
T-4000-3139	■			Brushed aluminum/white
T-4000-3140	■		■	
T-4000-3144		■		

1. Without Johnson Controls logo

The performance specifications are nominal and conform to acceptable industry standards. For applications at conditions beyond these specifications, consult the local Johnson Controls office. Johnson Controls shall not be liable for damages resulting from misapplication or misuse of its products. © 2017 Johnson Controls.

TE-6300 Series Temperature Sensors Catalog Page (Continued)

Technical Specifications

TE-6300 Series Temperature Sensors (Part 1 of 2)		
Sensor Reference Resistance	**1k ohm nickel**	1k ohms at 70°F (21°C)
	1k ohm nickel averaging	
	1k ohm platinum	1k ohms at 32°F (0°C)
	100 ohm platinum averaging	100 ohms at 32°F (0°C)
	1k ohm platinum averaging	1k ohms at 32°F (0°C)
	2.2k ohm thermistor	2,252 ohms at 77°F (25°C)
	10k ohm thermistor	10.0k ohms at 77°F (25°C)
Sensor Accuracy	**1k ohm nickel**	±0.34F° at 70°F (±0.19C° at 21°C)
	1k ohm nickel averaging	±3.4F° at 70°F (±1.9C° at 21°C)
	1k ohm platinum Class A (TE-635xx)	EN 60751 Class A, ± [0.15 + 0.002 * | T °C |], ±0.19C° at 21°C (±0.35F° at 70°F)
	100 ohm platinum Class A	
	1k ohm platinum Class B (TE-632xx)	EN 60751 Class B, ± [0.30 + 0.005 * | T °C |], ±0.41C° at 21°C (±0.73F° at 70°F)
	100 ohm platinum averaging	±1.0F°at 70°F (± 0.58C° at 21°C)
	1k ohm platinum averaging	
	2.2k ohm thermistor	±0.36F° (±0.2C°) in the range: 32 to 158°F (0 to 70°C)
	10k ohm thermistor	±0.9F° (±0.5C°) in the range: 32 to 158°F (0 to 70°C)
Sensor Temperature Coefficient	**1k ohm nickel**	Approximately 3 ohms/F° (5.4 ohms/C°)
	1k ohm nickel averaging	
	1k ohm platinum	Approximately 2 ohms/F° (3.9 ohms/C°) 3,850 ppm/K
	100 ohm platinum averaging	Approximately 0.2 ohms/F° (0.39 ohms/C°)
	1k ohm platinum averaging	Approximately 2 ohms/F° (3.9 ohms/C°)
	2.2k ohm thermistor	Nonlinear, negative temperature coefficient (NTC)
	10k ohm thermistor	Nonlinear NTC, Johnson Controls Type II
Electrical Connection	**TE-63xxE**	22 AWG (0.6 mm diameter) x 6 in. (152 mm) long
	TE-63xxM	
	TE-63xxP	
	TE-63xxF	22 AWG (0.6 mm diameter) x 12 ft (3 m) braided-copper wires, low voltage insulation, half-stripped ends
	TE-63xxP nickel averaging	18 AWG (1.0 mm diameter) x 6 in. (152 mm) long
	TE-63xS	22 AWG (0.6 mm diameter) x 10 ft (3 m) long plenum-rated cable
	TE-63xxA	22 AWG (0.6 mm diameter) x 10 ft (3 m) long plenum-rated cable, with 2-position plug terminal block for 1/4 in. (6.35 mm) external tab terminals on 0.197 in. (5 mm) centers
	TE-63xxV	
Materials	**Probes**	Nickel averaging: 0.094 in. (2.4 mm) outside diameter (O.D.) copper tubing Nickel averaging adaptor: 0.25 in. (6.35 mm) O.D. brass Platinum averaging probe: 0.19 in. (4.8 mm) aluminum tubing All others: 0.25 in. (6.35 mm) O.D. stainless steel
	TE-63xxA	Mounting adaptor plate and gland: thermoplastic
	TE-63xxF	Flush mount: stainless steel
	TE-63xxM	Enclosure: corrosion-protected steel Well sensor holder: 0.875 in. (22.2 mm) hex brass
	TE-63xxP	Conduit box and shield: rigid thermoplastic Mounting plate: aluminum Sensor holder: rigid thermoplastic Wall mount base plate: corrosion-protected steel Wall mount cover: rigid thermoplastic (white) Wall mount face plate: brushed aluminum
	TE-63xxE	Mounting flange: stainless steel
	TE-63xxV	
Operating Conditions	**TE-63xxA**	-50 to 140°F (-46 to 60°C)
	TE-63xxF	32 to 104°F (0 to 40°C)
	TE-63xxE	-50 to 220°F (-46 to 104°C)
	TE-63xxM	
	TE-63xxP	Enclosure: -50 to 122°F (-46 to 50°C) Sensor probe: -50 to 220°F (-46 to 104°C)
	TE-63xS	Sensor probe: -50 to 220°F (-46 to 104°C) Wire harness: -50 to 122°F (-46 to 50°C)
	TE-63xxV	

The performance specifications are nominal and conform to acceptable industry standards. For applications at conditions beyond these specifications, consult the local Johnson Controls office. Johnson Controls shall not be liable for damages resulting from misapplication or misuse of its products. © 2017 Johnson Controls.

TE-6300 Series Temperature Sensors Catalog Page (Continued)

TE-6300 Series Temperature Sensors (Part 2 of 2)		
Shipping Weight	**TE-63xxA**	0.2 lb (0.09 kg)
	TE-63xxE	
	TE-63xxF	0.25 lb (113.4 kg)
	TE-63xxM	Duct averaging: 0.9 lb (0.41 kg) Duct mount: 0.4 lb (0.18 kg) Well insertion: 0.5 lb (0.23 kg)
	TE-63xxP	Duct averaging: 0.5 lb (0.23 kg) Duct mount: 0.4 lb (0.18 kg) Outdoor air: 0.5 lb (0.23 kg) Wall mount: 0.2 lb (0.09 kg) Well insertion: 0.35 lb (0.16 kg)
	TE-63xS	Strap mount: 0.2 lb (0.09 kg)
	TE-63xxV	Duct averaging: 0.7 lb (0.32 kg) Duct mount: 0.2 lb (0.09 kg)
Dimensions (H x W x D)	**TE-63xxA**	2.17 in. (55 mm) diameter plus 4 or 8 in. (102 or 203 m) element
	TE-63xxE	Duct mount: 2.5 x 1.50 in. (57 x 38 mm) plus 2, 6, 8, or 12 in. (51, 152, 203, or 305 mm) element
	TE-63xxF	Flush mount: 4-1/2 x 2-3/4 in. (114 x 70 mm)
	TE-63xxM	Duct averaging: 1.87 x 1.87 x 1.80 in. (47.5 x 47.5 x 45.8 mm) plus 8 or 17 ft (2.4 or 5.2 m) element Duct mount: 1.87 x 1.87 x 1.80 in. (47.5 x 47.5 x 45.8 mm) plus 4, 8, or 18 in. (102, 203, or 457 mm) element Well insertion: 1.87 x 1.87 x 1.80 in. (47.5 x 47.5 x 45.8 mm) plus 6 or 8 in. (152 or 203 mm) element
	TE-63xxP	Duct averaging: 5.97 x 1.38 x 2.75 in. (152 x 35 x 70 mm) plus 8, 10, 17, or 20 ft (2.4, 3.0, 5.2, or 6.1 m) element Duct mount: 5.97 x 1.38 x 2.75 in. (152 x 35 x 70 mm) plus 6 or 8 in. (152 or 203 mm) probe Outdoor air: 5.97 x 3.47 x 4.46 in. (152 x 88 x 113 mm) Wall mount: 2.09 x 3.12 x 1.80 in. (53 x 79 x 46 mm) Well insertion: 5.97 x 1.38 x 2.75 in. (152 x 35 x 70 mm) plus 6 or 8 in. (152 or 203 mm) probe
	TE-63xS	Strap mount: 0.25 in. (6.4 mm) diameter x 3.00 in. (76 mm) long
	TE-63xxV	Duct averaging: 2.25 x 1.50 in. (57 x 38 mm) plus 8 or 17 ft (2.4 or 5.2 m) element Duct mount: 2.25 x 1.50 in. (57 x 38 mm) plus 4 or 8 in. (102 or 203 mm) element

The performance specifications are nominal and conform to acceptable industry standards. For applications at conditions beyond these specifications, consult the local Johnson Controls office. Johnson Controls shall not be liable for damages resulting from misapplication or misuse of its products. © 2017 Johnson Controls.

Code No. LIT-1900222
Issued January 6, 2015

VG1000 Series Two-Way, Stainless Steel Trim, NPT End Connections Ball Valves with Spring-Return Electric Actuators without Switches

Description

VG1000 Series Ball Valves are designed to regulate the flow of hot or chilled water and, for some models, low pressure steam in response to the demand of a controller in HVAC systems. Available in sizes 1/2 through 2 in. (DN15 through DN50), this family of two- and three-way forged brass valves is factory or field mounted to Johnson Controls® VA9104, M9106, M9109, and M9100 Series Non-Spring-Return and VA9203 and VA9208 Series Spring-Return Electric Actuators for on/off, floating, or proportional control.

Refer to the *VG1000 Series Forged Brass Ball Valves Product Bulletin (LIT-977132)* for important product application information.

AHU-2: PH-O, RH-O
~~AHU-3: RH-O~~
CF-1, HRV-1, CUH-1.1, UH-2.8, RAD-1,2, WF-1, HEAT VENT: HEATING COIL VALVES
HEAT EXCHANGER HEX3.1,3.2

Features

- Forged Brass Body — provides 580 psig static pressure rating.
- 200 psi Closeoff Pressure Rating — provides tight shutoff.
- Graphite-Reinforced Polytetrafluoroethylene (PTFE) Seats — include 15% graphite-reinforced ball seals, providing better wear resistance.
- 300 Series Stainless Steel Ball and Stem Assembly — tolerates high-temperature water or 15 psi saturated steam with fluid temperatures of -22 to 284°F (-30 to 140°C) or where a higher degree of corrosion protection is desired.
- 500:1 Rangeability — provides accurate control under all load conditions.

Repair Information

If the VG1000 Series Ball Valve fails to operate within its specifications, replace the valve body, actuator, or entire assembly. For replacement parts, contact the nearest Johnson Controls representative.



VG1000 Series Two-Way, Spring-Return, Stainless Steel Ball and Stem Ball Valve Assemblies without End Switches

Two-Way — Spring Return Valves — Without Switches (Not Rated for Steam Service) (Part 1 of 2)

Fluid Temperatures: -22 to 212°F (-30 to 100°C) Not Rated for Steam Service				AC 24 V			AC 85–264 V (VA9203) AC 120 V (VA9208)
Valve	**Size, in.**	**Cv**	**Closeoff psig**	**Floating**	**DC 0 to 10 V Proportional**	**On/Off**	**On/Off**
				Spring Return Open — Valve Normally Open			
				VA9203-AGA-2Z	**VA9203-GGA-2Z**	**VA9203-BGA-2**	**VA9203-BUA-2**
VG1245AD	1/2	1.2[1]	200	VG1245AD+923AGA	VG1245AD+923GGA	VG1245AD+923BGA	VG1245AD+923BUA
VG1245AE		1.9[1]		VG1245AE+923AGA	VG1245AE+923GGA	VG1245AE+923BGA	VG1245AE+923BUA
VG1245AF		2.9[1]		VG1245AF+923AGA	VG1245AF+923GGA	VG1245AF+923BGA	VG1245AF+923BUA
VG1245AG		4.7[1]		VG1245AG+923AGA	VG1245AG+923GGA	VG1245AG+923BGA	VG1245AG+923BUA
VG1245AL		7.4[1]		VG1245AL+923AGA	VG1245AL+923GGA	VG1245AL+923BGA	VG1245AL+923BUA
VG1245AN		11.7		VG1245AN+923AGA	VG1245AN+923GGA	VG1245AN+923BGA	VG1245AN+923BUA
VG1245BG	3/4	4.7[1]	200	VG1245BG+923AGA	VG1245BG+923GGA	VG1245BG+923BGA	VG1245BG+923BUA
VG1245BL		7.4[1]		VG1245BL+923AGA	VG1245BL+923GGA	VG1245BL+923BGA	VG1245BL+923BUA
VG1245BN		11.7		VG1245BN+923AGA	VG1245BN+923GGA	VG1245BN+923BGA	VG1245BN+923BUA
VG1245CL	1	7.4[1]	200	VG1245CL+923AGA	VG1245CL+923GGA	VG1245CL+923BGA	VG1245CL+923BUA
VG1245CN		11.7[1]		VG1245CN+923AGA	VG1245CN+923GGA	VG1245CN+923BGA	VG1245CN+923BUA
VG1245CP		18.7		VG1245CP+923AGA	VG1245CP+923GGA	VG1245CP+923BGA	VG1245CP+923BUA
				Spring Return Open — Valve Normally Open			
				VA9208-AGA-2	**VA9208-GGA-2**	**VA9208-BGA-3**	**VA9208-BAA-3**
VG1245DN	1-1/4	11.7[1]	200	VG1245DN+928AGA	VG1245DN+928GGA	VG1245DN+938BGA	VG1245DN+938BAA
VG1245DP		18.7[1]		VG1245DP+928AGA	VG1245DP+928GGA	VG1245DP+938BGA	VG1245DP+938BAA
VG1245DR		29.2		VG1245DR+928AGA	VG1245DR+928GGA	VG1245DR+938BGA	VG1245DR+938BAA
VG1245EP	1-1/2	18.7[1]	200	VG1245EP+928AGA	VG1245EP+928GGA	VG1245EP+938BGA	VG1245EP+938BAA
VG1245ER		29.2[1]		VG1245ER+928AGA	VG1245ER+928GGA	VG1245ER+938BGA	VG1245ER+938BAA
VG1245ES		46.8		VG1245ES+928AGA	VG1245ES+928GGA	VG1245ES+938BGA	VG1245ES+938BAA
VG1245FR	2	29.2[1]	200	VG1245FR+928AGA	VG1245FR+928GGA	VG1245FR+938BGA	VG1245FR+938BAA
VG1245FS		46.8[1]		VG1245FS+928AGA	VG1245FS+928GGA	VG1245FS+938BGA	VG1245FS+938BAA
VG1245FT		73.7		VG1245FT+928AGA	VG1245FT+928GGA	VG1245FT+938BGA	VG1245FT+938BAA

The performance specifications are nominal and conform to acceptable industry standards. For applications at conditions beyond these specifications, consult the local Johnson Controls office. Johnson Controls, Inc. shall not be liable for damages resulting from misapplication or misuse of its products. © 2015 Johnson Controls, Inc.

VG1000 Series Two-Way, Stainless Steel Trim, NPT End Connections Ball Valves with Spring-Return Electric Actuators without Switches (Continued)

Two-Way — Spring Return Valves — Without Switches (Not Rated for Steam Service) (Part 2 of 2)

Fluid Temperatures: -22 to 212°F (-30 to 100°C) Not Rated for Steam Service				AC 24 V			AC 85–264 V (VA9203) AC 120 V (VA9208)
Valve	**Size, in.**	**Cv**	**Closeoff psig**	**Floating**	**DC 0 to 10 V Proportional**	**On/Off**	**On/Off**
				Spring Return Closed — Valve Normally Closed			
				VA9203-AGA-2Z	**VA9203-GGA-2Z**	**VA9203-BGA-2**	**VA9203-BUA-2**
VG1245AD	1/2	1.2	200	VG1245AD+943AGA	VG1245AD+943GGA	VG1245AD+943BGA	VG1245AD+943BUA
VG1245AE		1.9[1]		VG1245AE+943AGA	VG1245AE+943GGA	VG1245AE+943BGA	VG1245AE+943BUA
VG1245AF		2.9[1]		VG1245AF+943AGA	VG1245AF+943GGA	VG1245AF+943BGA	VG1245AF+943BUA
VG1245AG		4.7[1]		VG1245AG+943AGA	VG1245AG+943GGA	VG1245AG+943BGA	VG1245AG+943BUA
VG1245AL		7.4[1]		VG1245AL+943AGA	VG1245AL+943GGA	VG1245AL+943BGA	VG1245AL+943BUA
VG1245AN		11.7		VG1245AN+943AGA	VG1245AN+943GGA	VG1245AN+943BGA	VG1245AN+943BUA
VG1245BG	3/4	4.7[1]	200	VG1245BG+943AGA	VG1245BG+943GGA	VG1245BG+943BGA	VG1245BG+943BUA
VG1245BL		7.4[1]		VG1245BL+943AGA	VG1245BL+943GGA	VG1245BL+943BGA	VG1245BL+943BUA
VG1245BN		11.7		VG1245BN+943AGA	VG1245BN+943GGA	VG1245BN+943BGA	VG1245BN+943BUA
VG1245CL	1	7.4[1]	200	VG1245CL+943AGA	VG1245CL+943GGA	VG1245CL+943BGA	VG1245CL+943BUA
VG1245CN		11.7[1]		VG1245CN+943AGA	VG1245CN+943GGA	VG1245CN+943BGA	VG1245CN+943BUA
VG1245CP		18.7		VG1245CP+943AGA	VG1245CP+943GGA	VG1245CP+943BGA	VG1245CP+943BUA
				Spring Return Closed — Valve Normally Closed			
				VA9208-AGA-2	**VA9208-GGA-2**	**VA9208-BGA-3**	**VA9208-BAA-3**
VG1245DN	1-1/4	11.7[1]	200	VG1245DN+948AGA	VG1245DN+948GGA	VG1245DN+958BGA	VG1245DN+958BAA
VG1245DP		18.7[1]		VG1245DP+948AGA	VG1245DP+948GGA	VG1245DP+958BGA	VG1245DP+958BAA
VG1245DR		29.2		VG1245DR+948AGA	VG1245DR+948GGA	VG1245DR+958BGA	VG1245DR+958BAA
VG1245EP	1-1/2	18.7[1]	200	VG1245EP+948AGA	VG1245EP+948GGA	VG1245EP+958BGA	VG1245EP+958BAA
VG1245ER		29.2[1]		VG1245ER+948AGA	VG1245ER+948GGA	VG1245ER+958BGA	VG1245ER+958BAA
VG1245ES		46.8		VG1245ES+948AGA	VG1245ES+948GGA	VG1245ES+958BGA	VG1245ES+958BAA
VG1245FR	2	29.2[1]	200	VG1245FR+948AGA	VG1245FR+948GGA	VG1245FR+958BGA	VG1245FR+958BAA
VG1245FS		46.8[1]		VG1245FS+948AGA	VG1245FS+948GGA	VG1245FS+958BGA	VG1245FS+958BAA
VG1245FT		73.7		VG1245FT+948AGA	VG1245FT+948GGA	VG1245FT+958BGA	VG1245FT+958BAA

1. Valve has a characterizing disk.

Valve Assemblies with M9000-561 Thermal Barrier Installed — Rated for High-Temperature Fluid Service Two-Way — Spring Return Valve Open — Normally Open — Without End Switches (Part 1 of 2)

Fluid Temperatures: -22 to 284°F (-30 to 140°C) Water and 15 psi Steam				AC 24 V			AC 85–264 V (VA9203) AC 120 V (VA9208)
Valve	**Size, in.**	**Cv**	**Closeoff psig**	**Floating**	**DC 0 to 10 V Proportional**	**On/Off**	**On/Off**
				Spring Return Open — Valve Normally Open			
				VA9203-AGA-2Z	**VA9203-GGA-2Z**	**VA9203-BGA-2**	**VA9203-BUA-2**
VG1245AD	1/2	1.2[1]	200	VG1245ADH923AGA	VG1245ADH923GGA	VG1245ADH923BGA	VG1245ADH923BUA
VG1245AE		1.9[1]		VG1245AEH923AGA	VG1245AEH923GGA	VG1245AEH923BGA	VG1245AEH923BUA
VG1245AF		2.9[1]		VG1245AFH923AGA	VG1245AFH923GGA	VG1245AFH923BGA	VG1245AFH923BUA
VG1245AG		4.7[1]		VG1245AGH923AGA	VG1245AGH923GGA	VG1245AGH923BGA	VG1245AGH923BUA
VG1245AL		7.4[1]		VG1245ALH923AGA	VG1245ALH923GGA	VG1245ALH923BGA	VG1245ALH923BUA
VG1245AN		11.7		VG1245ANH923AGA	VG1245ANH923GGA	VG1245ANH923BGA	VG1245ANH923BUA
VG1245BG	3/4	4.7[1]	200	VG1245BGH923AGA	VG1245BGH923GGA	VG1245BGH923BGA	VG1245BGH923BUA
VG1245BL		7.4[1]		VG1245BLH923AGA	VG1245BLH923GGA	VG1245BLH923BGA	VG1245BLH923BUA
VG1245BN		11.7		VG1245BNH923AGA	VG1245BNH923GGA	VG1245BNH923BGA	VG1245BNH923BUA
VG1245CL	1	7.4[1]	200	VG1245CLH923AGA	VG1245CLH923GGA	VG1245CLH923BGA	VG1245CLH923BUA
VG1245CN		11.7[1]		VG1245CNH923AGA	VG1245CNH923GGA	VG1245CNH923BGA	VG1245CNH923BUA
VG1245CP		18.7		VG1245CPH923AGA	VG1245CPH923GGA	VG1245CPH923BGA	VG1245CPH923BUA

The performance specifications are nominal and conform to acceptable industry standards. For applications at conditions beyond these specifications, consult the local Johnson Controls office. Johnson Controls, Inc. shall not be liable for damages resulting from misapplication or misuse of its products. © 2015 Johnson Controls, Inc.

VG1000 Series Two-Way, Stainless Steel Trim, NPT End Connections Ball Valves with Spring-Return Electric Actuators without Switches (Continued)

Valve Assemblies with M9000-561 Thermal Barrier Installed — Rated for High-Temperature Fluid Service Two-Way — Spring Return Valve Open — Normally Open — Without End Switches (Part 2 of 2)

Fluid Temperatures: -22 to 284°F (-30 to 140°C) Water and 15 psi Steam				AC 24 V			AC 85–264 V (VA9203) AC 120 V (VA9208)
Valve	**Size, in.**	**Cv**	**Closeoff psig**	**Floating**	**DC 0 to 10 V Proportional**	**On/Off**	**On/Off**
				Spring Return Open — Valve Normally Open			
				VA9208-AGA-2	**VA9208-GGA-2**	**VA9208-BGA-3**	**VA9208-BAA-3**
VG1245DN	1-1/4	11.7[1]	200	VG1245DNH928AGA	VG1245DNH928GGA	VG1245DNH938BGA	VG1245DNH938BAA
VG1245DP		18.7[1]		VG1245DPH928AGA	VG1245DPH928GGA	VG1245DPH938BGA	VG1245DPH938BAA
VG1245DR		29.2		VG1245DRH928AGA	VG1245DRH928GGA	VG1245DRH938BGA	VG1245DRH938BAA
VG1245EP	1-1/2	18.7[1]	200	VG1245EPH928AGA	VG1245EPH928GGA	VG1245EPH938BGA	VG1245EPH938BAA
VG1245ER		29.2[1]		VG1245ERH928AGA	VG1245ERH928GGA	VG1245ERH938BGA	VG1245ERH938BAA
VG1245ES		46.8		VG1245ESH928AGA	VG1245ESH928GGA	VG1245ESH938BGA	VG1245ESH938BAA
VG1245FR	2	29.2[1]	200	VG1245FRH928AGA	VG1245FRH928GGA	VG1245FRH938BGA	VG1245FRH938BAA
VG1245FS		46.8[1]		VG1245FSH928AGA	VG1245FSH928GGA	VG1245FSH938BGA	VG1245FSH938BAA
VG1245FT		73.7		VG1245FTH928AGA	VG1245FTH928GGA	VG1245FTH938BGA	VG1245FTH938BAA
				Spring Return Closed — Valve Normally Closed			
				VA9203-AGA-2Z	**VA9203-GGA-2Z**	**VA9203-BGA-2**	**VA9203-BUA-2**
VG1245AD	1/2	1.2	200	VG1245ADH943AGA	VG1245ADH943GGA	VG1245ADH943BGA	VG1245ADH943BUA
VG1245AE		1.9[1]		VG1245AEH943AGA	VG1245AEH943GGA	VG1245AEH943BGA	VG1245AEH943BUA
VG1245AF		2.9[1]		VG1245AFH943AGA	VG1245AFH943GGA	VG1245AFH943BGA	VG1245AFH943BUA
VG1245AG		4.7[1]		VG1245AGH943AGA	VG1245AGH943GGA	VG1245AGH943BGA	VG1245AGH943BUA
VG1245AL		7.4[1]		VG1245ALH943AGA	VG1245ALH943GGA	VG1245ALH943BGA	VG1245ALH943BUA
VG1245AN		11.7		VG1245ANH943AGA	VG1245ANH943GGA	VG1245ANH943BGA	VG1245ANH943BUA
VG1245BG	3/4	4.7[1]	200	VG1245BGH943AGA	VG1245BGH943GGA	VG1245BGH943BGA	VG1245BGH943BUA
VG1245BL		7.4[1]		VG1245BLH943AGA	VG1245BLH943GGA	VG1245BLH943BGA	VG1245BLH943BUA
VG1245BN		11.7		VG1245BNH943AGA	VG1245BNH943GGA	VG1245BNH943BGA	VG1245BNH943BUA
VG1245CL	1	7.4[1]	200	VG1245CLH943AGA	VG1245CLH943GGA	VG1245CLH943BGA	VG1245CLH943BUA
VG1245CN		11.7[1]		VG1245CNH943AGA	VG1245CNH943GGA	VG1245CNH943BGA	VG1245CNH943BUA
VG1245CP		18.7		VG1245CPH943AGA	VG1245CPH943GGA	VG1245CPH943BGA	VG1245CPH943BUA
				Spring Return Closed — Valve Normally Closed			
				VA9208-AGA-2	**VA9208-GGA-2**	**VA9208-BGA-3**	**VA9208-BAA-3**
VG1245DN	1-1/4	11.7[1]	200	VG1245DNH948AGA	VG1245DNH948GGA	VG1245DNH958BGA	VG1245DNH958BAA
VG1245DP		18.7[1]		VG1245DPH948AGA	VG1245DPH948GGA	VG1245DPH958BGA	VG1245DPH958BAA
VG1245DR		29.2		VG1245DRH948AGA	VG1245DRH948GGA	VG1245DRH958BGA	VG1245DRH958BAA
VG1245EP	1-1/2	18.7[1]	200	VG1245EPH948AGA	VG1245EPH948GGA	VG1245EPH958BGA	VG1245EPH958BAA
VG1245ER		29.2[1]		VG1245ERH948AGA	VG1245ERH948GGA	VG1245ERH958BGA	VG1245ERH958BAA
VG1245ES		46.8		VG1245ESH948AGA	VG1245ESH948GGA	VG1245ESH958BGA	VG1245ESH958BAA
VG1245FR	2	29.2[1]	200	VG1245FRH948AGA	VG1245FRH948GGA	VG1245FRH958BGA	VG1245FRH958BAA
VG1245FS		46.8[1]		VG1245FSH948AGA	VG1245FSH948GGA	VG1245FSH958BGA	VG1245FSH958BAA
VG1245FT		73.7		VG1245FTH948AGA	VG1245FTH948GGA	VG1245FTH958BGA	VG1245FTH958BAA

1. Valve has a characterizing disk.

The performance specifications are nominal and conform to acceptable industry standards. For applications at conditions beyond these specifications, consult the local Johnson Controls office. Johnson Controls, Inc. shall not be liable for damages resulting from misapplication or misuse of its products. © 2015 Johnson Controls, Inc.

VG1000 Series Two-Way, Stainless Steel Trim, NPT End Connections Ball Valves with Spring-Return Electric Actuators without Switches (Continued)

Technical Specifications

VG1000 Series Two-Way, Stainless Steel Trim, NPT End Connections Ball Valves with Spring-Return Electric Actuators without Switches		
Service[1]		Hot Water, Chilled Water, 50/50 Glycol Solutions, and 15 psig (103 kPa) Saturated Steam for HVAC Systems
Fluid Temperature Limits	**Water**	-22 to 284°F (-30 to 140°C)
	Steam	15 psig (103 kPa) at 250°F (121°C)
Maximum Actuator Fluid Temperature Limit	**212°F (100°C)**	VA9203 Series VA9208 Series
	284°F (140°C)	VA9203 Series with M9000-561 Thermal Barrier VA9208 Series with M9000-561 Thermal Barrier
Valve Body Pressure Rating	**Water**	580 psig (4,000 kPa) at 203°F (95°C) (PN40) 464 psig (3,196 kPa) at 284°F (140°C) (PN40)
	Steam	15 psig (103 kPa) Saturated Steam (Applies to VA9203 Series or VA9208 Series Actuators with M9000-561 Thermal Barrier Installed)
Maximum Closeoff Pressure		200 psid (1,378 kPa)
Maximum Recommended Operating Pressure Drop		50 psid (340 kPa)
Flow Characteristics	**Two-Way**	Equal Percentage
Rangeability[2]		Greater than 500:1
Minimum Ambient Operating Temperature	**-22°F (-30°C)**	VA9203 Series Spring-Return Actuators
	-40°F (-40°C)	VA9208 Series Spring-Return Actuators
Maximum Ambient Operating Temperature[3] **(Limited by the Actuator and Linkage)**	**Direct Mount**	140°F (60°C): VA9203 or VA9208 Series Spring-Return Actuators
Leakage		0.01% of Maximum Flow per ANSI/FCI 70-2, Class 4
		1% of Maximum Flow for Three-Way Bypass Port
End Connections		National Pipe Thread (NPT)
Materials	**Body**	Forged Brass
	Ball	300 Series Stainless Steel
	Blowout-Proof Stem	300 Series Stainless Steel
	Seats	Graphite-Reinforced PTFE with Ethylene Propylene Diene Monomer (EPDM) O-Ring Backing
	Stem Seals	EPDM Double O-Rings
	Characterizing Disk	Amodel® AS-1145HS Polyphthalamide Resin
Compliance CRN		0C16910.5C

1. Proper water treatment is recommended; refer to the VDI 2035 Guideline.
2. Rangeability is defined as the ratio of maximum controllable flow to minimum controllable flow.
3. In steam applications, install the valve with the stem horizontal to the piping and wrap the valve and piping with insulation.

The performance specifications are nominal and conform to acceptable industry standards. For applications at conditions beyond these specifications, consult the local Johnson Controls office. Johnson Controls, Inc. shall not be liable for damages resulting from misapplication or misuse of its products. © 2015 Johnson Controls, Inc.

Code No. LIT-1900221
Issued October 2016

VG1000 Series Two-Way, Stainless Steel Trim, NPT End Connections Ball Valves with Spring-Return Electric Actuators with Switches

Description

VG1000 Series Ball Valves are designed to regulate the flow of hot or chilled water and, for some models, low-pressure steam in response to the demand of a controller in HVAC systems. Available in sizes 1/2 through 2 in. (DN15 through DN50), this family of two- and three-way forged brass valves is factory or field mounted to Johnson Controls® VA9104, VA9109, and M9100 Series Non-Spring Return and VA9203 and VA9208 Series Spring Return Electric Actuators for on/off, floating, or proportional control.

Refer to the *VG1000 Series Forged Brass Ball Valves Product Bulletin (LIT-977132)* for important product application information.

Features

- Forged Brass Body — provides 580 psig static pressure rating.
- Graphite-Reinforced Polytetrafluoroethylene (PTFE) Seats — include 15% graphite-reinforced ball seals, providing better wear resistance.
- 500:1 Rangeability — provides accurate control under all load conditions.
- Maintenance-Free Design — performs without failure in excess of 200,000 full stroke cycles in iron-oxide contaminated water.

Repair Information

If the VG1000 Series Ball Valve fails to operate within its specifications, replace the valve body, actuator, or entire assembly. For replacement parts, contact the nearest Johnson Controls representative.



VG1000 Series Two-Way, Spring-Return, Stainless Steel Ball and Stem Ball Valve Assemblies with End Switches

Selection Charts

Two-Way — Spring Return Valve Open — Normally Open with Switches (Not Rated for Steam Service)

Fluid Temperatures: -22 to 212°F (-30 to 100°C) Not Rated for Steam Service				AC 24 V			AC 85–264 V (VA9203) AC 120 V (VA9208)
Valve	**Size, in.**	**Cv**	**Closeoff psig**	**Floating**	**DC 0 to 10 V Proportional**	**On/Off**	**On/Off**
				Spring Return Open — Valve Normally Open — Actuators with One Switch			
				VA9203-AGB-2Z	**VA9203-GGB-2Z**	**VA9203-BGB-2**	**VA9203-BUB-2**
VG1245AD	1/2	1.2[1]	200	VG1245AD+923AGB	VG1245AD+923GGB	VG1245AD+923BGB	VG1245AD+923BUB
VG1245AE		1.9[1]		VG1245AE+923AGB	VG1245AE+923GGB	VG1245AE+923BGB	VG1245AE+923BUB
VG1245AF		2.9[1]		VG1245AF+923AGB	VG1245AF+923GGB	VG1245AF+923BGB	VG1245AF+923BUB
VG1245AG		4.7[1]		VG1245AG+923AGB	VG1245AG+923GGB	VG1245AG+923BGB	VG1245AG+923BUB
VG1245AL		7.4[1]		VG1245AL+923AGB	VG1245AL+923GGB	VG1245AL+923BGB	VG1245AL+923BUB
VG1245AN		11.7		VG1245AN+923AGB	VG1245AN+923GGB	VG1245AN+923BGB	VG1245AN+923BUB
VG1245BG	3/4	4.7[1]	200	VG1245BG+923AGB	VG1245BG+923GGB	VG1245BG+923BGB	VG1245BG+923BUB
VG1245BL		7.4[1]		VG1245BL+923AGB	VG1245BL+923GGB	VG1245BL+923BGB	VG1245BL+923BUB
VG1245BN		11.7		VG1245BN+923AGB	VG1245BN+923GGB	VG1245BN+923BGB	VG1245BN+923BUB
VG1245CL	1	7.4[1]	200	VG1245CL+923AGB	VG1245CL+923GGB	VG1245CL+923BGB	VG1245CL+923BUB
VG1245CN		11.7[1]		VG1245CN+923AGB	VG1245CN+923GGB	VG1245CN+923BGB	VG1245CN+923BUB
VG1245CP		18.7		VG1245CP+923AGB	VG1245CP+923GGB	VG1245CP+923BGB	VG1245CP+923BUB
				Spring Return Open — Valve Normally Open — Actuators with Two Switches			
				VA9208-AGC-3	**VA9208-GGC-3**	**VA9208-BGC-3**	**VA9208-BAC-3**
VG1245DN	1-1/4	11.7[1]	200	VG1245DN+938AGC	VG1245DN+938GGC	VG1245DN+938BGC	VG1245DN+938BAC
VG1245DP		18.7[1]		VG1245DP+938AGC	VG1245DP+938GGC	VG1245DP+938BGC	VG1245DP+938BAC
VG1245DR		29.2		VG1245DR+938AGC	VG1245DR+938GGC	VG1245DR+938BGC	VG1245DR+938BAC
VG1245EP	1-1/2	18.7[1]	200	VG1245EP+938AGC	VG1245EP+938GGC	VG1245EP+938BGC	VG1245EP+938BAC
VG1245ER		29.2[1]		VG1245ER+938AGC	VG1245ER+938GGC	VG1245ER+938BGC	VG1245ER+938BAC
VG1245ES		46.8		VG1245ES+938AGC	VG1245ES+938GGC	VG1245ES+938BGC	VG1245ES+938BAC
VG1245FR	2	29.2[1]	200	VG1245FR+938AGC	VG1245FR+938GGC	VG1245FR+938BGC	VG1245FR+938BAC
VG1245FS		46.8[1]		VG1245FS+938AGC	VG1245FS+938GGC	VG1245FS+938BGC	VG1245FS+938BAC
VG1245FT		73.7		VG1245FT+938AGC	VG1245FT+938GGC	VG1245FT+938BGC	VG1245FT+938BAC

1. Valve has a characterizing disk.

The performance specifications are nominal and conform to acceptable industry standards. For applications at conditions beyond these specifications, consult the local Johnson Controls office. Johnson Controls, Inc. shall not be liable for damages resulting from misapplication or misuse of its products. © 2016 Johnson Controls, Inc.

VG1000 Series Two-Way, Stainless Steel Trim, NPT End Connections Ball Valves with Spring-Return Electric Actuators with Switches (Continued)

Two-Way — Spring Return Closed — Valve Normally Closed

Fluid Temperatures: -22 to 212°F (-30 to 100°C) Not Rated for Steam Service				**AC 24 V**			**AC 85–264 V (VA9203) AC 120 V (VA9208)**
Valve	**Size, in.**	**Cv**	**Closeoff psig**	**Floating**	**DC 0 to 10 V Proportional**	**On/Off**	**On/Off**
				Spring Return Closed — Valve Normally Closed — Actuators with One Switch			
				VA9203-AGB-2Z	**VA9203-GGB-2Z**	**VA9203-BGB-2**	**VA9203-BUB-2**
VG1245AD	1/2	1.2[1]	200	VG1245AD+943AGB	VG1245AD+943GGB	VG1245AD+943BGB	VG1245AD+943BUB
VG1245AE		1.9[1]		VG1245AE+943AGB	VG1245AE+943GGB	VG1245AE+943BGB	VG1245AE+943BUB
VG1245AF		2.9[1]		VG1245AF+943AGB	VG1245AF+943GGB	VG1245AF+943BGB	VG1245AF+943BUB
VG1245AG		4.7[1]		VG1245AG+943AGB	VG1245AG+943GGB	VG1245AG+943BGB	VG1245AG+943BUB
VG1245AL		7.4[1]		VG1245AL+943AGB	VG1245AL+943GGB	VG1245AL+943BGB	VG1245AL+943BUB
VG1245AN		11.7		VG1245AN+943AGB	VG1245AN+943GGB	VG1245AN+943BGB	VG1245AN+943BUB
VG1245BG	3/4	4.7[1]	200	VG1245BG+943AGB	VG1245BG+943GGB	VG1245BG+943BGB	VG1245BG+943BUB
VG1245BL		7.4[1]		VG1245BL+943AGB	VG1245BL+943GGB	VG1245BL+943BGB	VG1245BL+943BUB
VG1245BN		11.7		VG1245BN+943AGB	VG1245BN+943GGB	VG1245BN+943BGB	VG1245BN+943BUB
VG1245CL	1	7.4[1]	200	VG1245CL+943AGB	VG1245CL+943GGB	VG1245CL+943BGB	VG1245CL+943BUB
VG1245CN		11.7[1]		VG1245CN+943AGB	VG1245CN+943GGB	VG1245CN+943BGB	VG1245CN+943BUB
VG1245CP		18.7		VG1245CP+943AGB	VG1245CP+943GGB	VG1245CP+943BGB	VG1245CP+943BUB
				Spring Return Closed — Valve Normally Closed — Actuators with Two Switches			
				VA9208-AGC-3	**VA9208-GGC-3**	**VA9208-BGC-3**	**VA9208-BAC-3**
VG1245DN	1-1/4	11.7[1]	200	VG1245DN+958AGC	VG1245DN+958GGC	VG1245DN+958BGC	VG1245DN+958BAC
VG1245DP		18.7[1]		VG1245DP+958AGC	VG1245DP+958GGC	VG1245DP+958BGC	VG1245DP+958BAC
VG1245DR		29.2		VG1245DR+958AGC	VG1245DR+958GGC	VG1245DR+958BGC	VG1245DR+958BAC
VG1245EP	1-1/2	18.7[1]	200	VG1245EP+958AGC	VG1245EP+958GGC	VG1245EP+958BGC	VG1245EP+958BAC
VG1245ER		29.2[1]		VG1245ER+958AGC	VG1245ER+958GGC	VG1245ER+958BGC	VG1245ER+958BAC
VG1245ES		46.8		VG1245ES+958AGC	VG1245ES+958GGC	VG1245ES+958BGC	VG1245ES+958BAC
VG1245FR	2	29.2[1]	200	VG1245FR+958AGC	VG1245FR+958GGC	VG1245FR+958BGC	VG1245FR+958BAC
VG1245FS		46.8[1]		VG1245FS+958AGC	VG1245FS+958GGC	VG1245FS+958BGC	VG1245FS+958BAC
VG1245FT		73.7		VG1245FT+958AGC	VG1245FT+958GGC	VG1245FT+958BGC	VG1245FT+958BAC

1. Valve has a characterizing disk.

The performance specifications are nominal and conform to acceptable industry standards. For applications at conditions beyond these specifications, consult the local Johnson Controls office. Johnson Controls, Inc. shall not be liable for damages resulting from misapplication or misuse of its products. © 2016 Johnson Controls, Inc.

VG1000 Series Two-Way, Stainless Steel Trim, NPT End Connections Ball Valves with Spring-Return Electric Actuators with Switches (Continued)

Valve Assemblies with M9000-561 Thermal Barrier Installed — Rated for High-Temperature Fluid Service, Two-Way — Spring Return — With End Switches

Fluid Temperatures: -22 to 284°F (-30 to 140°C),15 psi Steam				**AC 24 V**			**AC 85–264 V (VA9203) AC 120 V (VA9208)**
Valve	**Size, in.**	**Cv**	**Closeoff psig**	**Floating**	**DC 0 to 10 V Proportional**	**On/Off**	**On/Off**
				Spring Return Open — Valve Normally Open — Actuators with One Switch			
				VA9203-AGB-2Z	**VA9203-GGB-2Z**	**VA9203-BGB-2**	**VA9203-BUB-2**
VG1245AD	1/2	1.2[1]	200	VG1245ADH923AGB	VG1245ADH923GGB	VG1245ADH923BGB	VG1245ADH923BUB
VG1245AE		1.9[1]		VG1245AEH923AGB	VG1245AEH923GGB	VG1245AEH923BGB	VG1245AEH923BUB
VG1245AF		2.9[1]		VG1245AFH923AGB	VG1245AFH923GGB	VG1245AFH923BGB	VG1245AFH923BUB
VG1245AG		4.7[1]		VG1245AGH923AGB	VG1245AGH923GGB	VG1245AGH923BGB	VG1245AGH923BUB
VG1245AL		7.4[1]		VG1245ALH923AGB	VG1245ALH923GGB	VG1245ALH923BGB	VG1245ALH923BUB
VG1245AN		11.7		VG1245ANH923AGB	VG1245ANH923GGB	VG1245ANH923BGB	VG1245ANH923BUB
VG1245BG	3/4	4.7[1]	200	VG1245BGH923AGB	VG1245BGH923GGB	VG1245BGH923BGB	VG1245BGH923BUB
VG1245BL		7.4[1]		VG1245BLH923AGB	VG1245BLH923GGB	VG1245BLH923BGB	VG1245BLH923BUB
VG1245BN		11.7		VG1245BNH923AGB	VG1245BNH923GGB	VG1245BNH923BGB	VG1245BNH923BUB
VG1245CL	1	7.4[1]	200	VG1245CLH923AGB	VG1245CLH923GGB	VG1245CLH923BGB	VG1245CLH923BUB
VG1245CN		11.7[1]		VG1245CNH923AGB	VG1245CNH923GGB	VG1245CNH923BGB	VG1245CNH923BUB
VG1245CP		18.7		VG1245CPH923AGB	VG1245CPH923GGB	VG1245CPH923BGB	VG1245CPH923BUB
				Spring Return Open — Valve Normally Open — Actuators with Two Switches			
				VA9208-AGC-3	**VA9208-GGC-3**	**VA9208-BGC-3**	**VA9208-BAC-3**
VG1245DN	1-1/4	11.7[1]	200	VG1245DNH938AGC	VG1245DNH938GGC	VG1245DNH938BGC	VG1245DNH938BAC
VG1245DP		18.7[1]		VG1245DPH938AGC	VG1245DPH938GGC	VG1245DPH938BGC	VG1245DPH938BAC
VG1245DR		29.2		VG1245DRH938AGC	VG1245DRH938GGC	VG1245DRH938BGC	VG1245DRH938BAC
VG1245EP	1-1/2	18.7[1]	200	VG1245EPH938AGC	VG1245EPH938GGC	VG1245EPH938BGC	VG1245EPH938BAC
VG1245ER		29.2[1]		VG1245ERH938AGC	VG1245ERH938GGC	VG1245ERH938BGC	VG1245ERH938BAC
VG1245ES		46.8		VG1245ESH938AGC	VG1245ESH938GGC	VG1245ESH938BGC	VG1245ESH938BAC
VG1245FR	2	29.2[1]	200	VG1245FRH938AGC	VG1245FRH938GGC	VG1245FRH938BGC	VG1245FRH938BAC
VG1245FS		46.8[1]		VG1245FSH938AGC	VG1245FSH938GGC	VG1245FSH938BGC	VG1245FSH938BAC
VG1245FT		73.7		VG1245FTH938AGC	VG1245FTH938GGC	VG1245FTH938BGC	VG1245FTH938BAC
				Spring Return Closed — Valve Normally Closed — Actuators with One Switch			
				VA9203-AGB-2Z	**VA9203-GGB-2Z**	**VA9203-BGB-2**	**VA9203-BUB-2**
VG1245AD	1/2	1.2[1]	200	VG1245ADH943AGB	VG1245ADH943GGB	VG1245ADH943BGB	VG1245ADH943BUB
VG1245AE		1.9[1]		VG1245AEH943AGB	VG1245AEH943GGB	VG1245AEH943BGB	VG1245AEH943BUB
VG1245AF		2.9[1]		VG1245AFH943AGB	VG1245AFH943GGB	VG1245AFH943BGB	VG1245AFH943BUB
VG1245AG		4.7[1]		VG1245AGH943AGB	VG1245AGH943GGB	VG1245AGH943BGB	VG1245AGH943BUB
VG1245AL		7.4[1]		VG1245ALH943AGB	VG1245ALH943GGB	VG1245ALH943BGB	VG1245ALH943BUB
VG1245AN		11.7		VG1245ANH943AGB	VG1245ANH943GGB	VG1245ANH943BGB	VG1245ANH943BUB
VG1245BG	3/4	4.7[1]	200	VG1245BGH943AGB	VG1245BGH943GGB	VG1245BGH943BGB	VG1245BGH943BUB
VG1245BL		7.4[1]		VG1245BLH943AGB	VG1245BLH943GGB	VG1245BLH943BGB	VG1245BLH943BUB
VG1245BN		11.7		VG1245BNH943AGB	VG1245BNH943GGB	VG1245BNH943BGB	VG1245BNH943BUB
VG1245CL	1	7.4[1]	200	VG1245CLH943AGB	VG1245CLH943GGB	VG1245CLH943BGB	VG1245CLH943BUB
VG1245CN		11.7[1]		VG1245CNH943AGB	VG1245CNH943GGB	VG1245CNH943BGB	VG1245CNH943BUB
VG1245CP		18.7		VG1245CPH943AGB	VG1245CPH943GGB	VG1245CPH943BGB	VG1245CPH943BUB
				Spring Return Closed — Valve Normally Closed — Actuators with Two Switches			
				VA9208-AGC-3	**VA9208-GGC-3**	**VA9208-BGC-3**	**VA9208-BAC-3**
VG1245DN	1-1/4	11.7[1]	200	VG1245DNH958AGC	VG1245DNH958GGC	VG1245DNH958BGC	VG1245DNH958BAC
VG1245DP		18.7[1]		VG1245DPH958AGC	VG1245DPH958GGC	VG1245DPH958BGC	VG1245DPH958BAC
VG1245DR		29.2		VG1245DRH958AGC	VG1245DRH958GGC	VG1245DRH958BGC	VG1245DRH958BAC
VG1245EP	1-1/2	18.7[1]	200	VG1245EPH958AGC	VG1245EPH958GGC	VG1245EPH958BGC	VG1245EPH958BAC
VG1245ER		29.2[1]		VG1245ERH958AGC	VG1245ERH958GGC	VG1245ERH958BGC	VG1245ERH958BAC
VG1245ES		46.8		VG1245ESH958AGC	VG1245ESH958GGC	VG1245ESH958BGC	VG1245ESH958BAC
VG1245FR	2	29.2[1]	200	VG1245FRH958AGC	VG1245FRH958GGC	VG1245FRH958BGC	VG1245FRH958BAC
VG1245FS		46.8[1]		VG1245FSH958AGC	VG1245FSH958GGC	VG1245FSH958BGC	VG1245FSH958BAC
VG1245FT		73.7		VG1245FTH958AGC	VG1245FTH958GGC	VG1245FTH958BGC	VG1245FTH958BAC

1. Valve has a characterizing disk.

The performance specifications are nominal and conform to acceptable industry standards. For applications at conditions beyond these specifications, consult the local Johnson Controls office. Johnson Controls, Inc. shall not be liable for damages resulting from misapplication or misuse of its products. © 2016 Johnson Controls, Inc.

VG1000 Series Two-Way, Stainless Steel Trim, NPT End Connections Ball Valves with Spring-Return Electric Actuators with Switches (Continued)

Technical Specifications

VG1000 Series Two-Way, Stainless Steel Trim, NPT End Connections Ball Valves with Spring-Return Electric Actuators with Switches		
Service[1]		Hot Water, Chilled Water, 50/50 Glycol Solutions, and 15 psig (103 kPa) Saturated Steam for HVAC Systems (Select Models)
Fluid Temperature Limits	**Water**	-22 to 284°F (-30 to 140°C)
	Steam	15 psig (103 kPa) at 250°F (121°C)
Maximum Actuator Fluid Temperature Limit	**212°F (100°C)**	VA9203 VA9208
	284°F (140°C)	VA9203 with M9000-561 Thermal Barrier VA9208 with M9000-561 Thermal Barrier
Valve Body Pressure Rating	**Water**	580 psig (4,000 kPa) at 203°F (95°C) 464 psig (3,199 kPa) at 284°F (140°C) (PN40)
	Steam	15 psig (103 kPa) Saturated Steam (Only with VA9203 or VA9208 Series Actuator with M900-561 Thermal Barrier)
Maximum Closeoff Pressure		200 psid (1,378 kPa)
Maximum Recommended Operating Pressure Drop		50 psid (340 kPa)
Flow Characteristics	**Two-Way**	Equal Percentage
Rangeability[2]		Greater than 500:1
Minimum Ambient Operating Temperature	**-22°F (-30°C)**	VA9203 Series Spring-Return Actuators
	-40°F (-40°C)	VA9208 Series Spring-Return Actuators
Maximum Ambient Operating Temperature[3] **(Limited by the Actuator)**	**Direct Mount**	140°F (60°C): VA9203 or VA9208 Series Spring-Return Actuators
Leakage		0.01% of Maximum Flow per ANSI/FCI 70-2, Class 4
		1% of Maximum Flow for Three-Way Bypass Port
End Connections		National Pipe Thread (NPT)
Materials	**Body**	Forged Brass
	Ball	300 Series Stainless Steel
	Blowout-Proof Stem	300 Series Stainless Steel
	Seats	Graphite-Reinforced PTFE with Ethylene Propylene Diene Monomer (EPDM) O-Ring Backing
	Stem Seals	EPDM Double O-Rings
	Characterizing Disk	Amodel® AS-1145HS Polyphthalamide Resin
Compliance CRN		0C16910.5C

1. Proper water treatment is recommended; refer to the VDI 2035 Guideline.
2. Rangeability is defined as the ratio of maximum controllable flow to minimum controllable flow.
3. In steam applications, install the valve with the stem horizontal to the piping and wrap the valve and piping with insulation.

The performance specifications are nominal and conform to acceptable industry standards. For applications at conditions beyond these specifications, consult the local Johnson Controls office. Johnson Controls, Inc. shall not be liable for damages resulting from misapplication or misuse of its products. © 2016 Johnson Controls, Inc.

Code No. LIT-1900418
Issued July 2018

VG1000 Series Flanged Ball Valves Catalog Page

Description

The VG1000 Series Flanged Ball Valves are primarily designed to regulate the flow of hot water, chilled water, and 50/50 glycol solutions to the demand of a controller in HVAC systems. The valves come in sizes of 2-1/2, 3, 4, 5, and 6 in. These American Society of Mechanical Engineers (ASME) Class 150 flanged valves come in both two- and three-way configurations. Johnson Controls offers valve, linkage, and actuator assemblies for factory or field mounting with either spring return or non-spring return actuators.

Refer to the *VG1000 Series Flanged Ball Valves Product Bulletin (LIT-12011228)* for important product application information and single point of contact information.

Features

- Closeoff Pressure Rating: 100 psi for Two-Way Valves; 50 psi for Three-Way Valves — provides tight shutoff.
- 300 Stainless Steel Ball and Stem Assembly — applies to systems with high-temperature water (0 to 284°F [-18 to 140°C]) or 25 psi saturated steam.
- 500:1 Rangeability — provides accurate control under all load conditions.
- Amodel® Flow Characterizing Disk — provides equal percentage flow characteristics for best temperature control; available in a wide array of Cv ranges to cover a broad variety of applications.
- Ethylene Propylene Diene Monomer (EPDM) Double O-Ring Stem Seal — offers tested leak-free operation for 200,000 cycles in iron-oxide contaminated water.
- Graphite-Reinforced Polytetrafluoroethylene (PTFE) Seats — include 15% graphite-reinforced ball seals that last twice as long in iron-oxide contaminated water when compared to virgin Teflon® ball seats.
- PTFE Thermal Spacer — provides thermal isolation between the actuator and the valve.
- Seats Backed with EPDM O-Rings — maintain a constant seating force that compensates for expansion, contraction, and seat wear without increasing operating torque.
- Maintenance-Free Design — performs without failure in excess of 200,000 full stroke cycles in iron-oxide contaminated water.
- Available with Factory-Mounted VA9320 or M9220 Series Electric Actuators — reduces field installation time and cost.

VG1000 Series Ball Valves Shown with Field Mounted VA9320 and M9220 Series Actuators



- Weather Shields Available for Field Installation — protect the actuator from corrosion, rain, freezing rain, sleet, and snow.

Repair Information

If the VG1000 Series Ball Valve fails to operate within its specifications, replace the valve body, actuator, or entire assembly. For replacement parts, contact the nearest Johnson Controls® representative.

Selection Charts

Flanged Stainless Steel Trim Ball Valves with Non-Spring Return Electric Actuators (Part 1 of 2)

Valve	Size, in.	Cv	Closeoff PSIG	AC and DC 24 V	
				On/Off, Floating, and Proportional	On/Off, Floating, and Proportional
				Without Switches	With Two Auxiliary Switches
				VA9320-HGA-2 Actuator	VA9320-HGA-2 Actuator with M9300-2 Switch Kit
Two-Way					
VG12A5GS	2-1/2	47	100	VG12A5GS+920HGA	VG12A5GS+920HGC
VG12A5KS				VG12A5KS+920HGA	VG12A5KS+920HGC
VG12A5GT		74		VG12A5GT+920HGA	VG12A5GT+920HGC
VG12A5KT				VG12A5KT+920HGA	VG12A5KT+920HGC
VG12A5GU		117		VG12A5GU+920HGA	VG12A5GU+920HGC
VG12A5KU				VG12A5KU+920HGA	VG12A5KU+920HGC
VG12A5HT	3	74	100	VG12A5HT+920HGA	VG12A5HT+920HGC
VG12A5LT				VG12A5LT+920HGA	VG12A5LT+920HGC
VG12A5HU		117		VG12A5HU+920HGA	VG12A5HU+920HGC
VG12A5LU				VG12A5LU+920HGA	VG12A5LU+920HGC
VG12A5HV		176		VG12A5HV+920HGA	VG12A5HV+920HGC
VG12A5LV				VG12A5LV+920HGA	VG12A5LV+920HGC
VG12A5HW		211		VG12A5HW+920HGA	VG12A5HW+920HGC
VG12A5LW				VG12A5LW+920HGA	VG12A5LW+920HGC

The performance specifications are nominal and conform to acceptable industry standards. For applications at conditions beyond these specifications, consult the local Johnson Controls office. Johnson Controls shall not be liable for damages resulting from misapplication or misuse of its products. © 2018 Johnson Controls.

VG1000 Series Flanged Ball Valves Catalog Page (Continued)

Flanged Stainless Steel Trim Ball Valves with Non-Spring Return Electric Actuators (Part 2 of 2)

Valve	Size, in.	Cv	Closeoff PSIG	AC and DC 24 V	
				On/Off, Floating, and Proportional	On/Off, Floating, and Proportional
				Without Switches	With Two Auxiliary Switches
				VA9320-HGA-2 Actuator	VA9320-HGA-2 Actuator with M9300-2 Switch Kit
VG12A5JU	4	117	100	VG12A5JU+920HGA	VG12A5JU+920HGC
VG12A5JV		176		VG12A5JV+920HGA	VG12A5JV+920HGC
VG12A5MW		190		VG12A5MW+920HGA	VG12A5MW+920HGC
VG12A5NY	5	290		VG12A5NY+920HGA	VG12A5NY+920HGC
VG12A5PZ	6	350		VG12A5PZ+920HGA	VG12A5PZ+920HGC
Three-Way					
VG18A5GS	2-1/2	47 / 29	50	VG18A5GS+920HGA	VG18A5GS+920HGC
VG18A5KS				VG18A5KS+920HGA	VG18A5KS+920HGC
VG18A5GT		74 / 47		VG18A5GT+920HGA	VG18A5GT+920HGC
VG18A5KT				VG18A5KT+920HGA	VG18A5KT+920HGC
VG18A5GU		117 / 74		VG18A5GU+920HGA	VG18A5GU+920HGC
VG18A5KU				VG18A5KU+920HGA	VG18A5KU+920HGC
VG18A5HT	3	74 / 47	50	VG18A5HT+920HGA	VG18A5HT+920HGC
VG18A5LT				VG18A5LT+920HGA	VG18A5LT+920HGC
VG18A5HU		117 / 74		VG18A5HU+920HGA	VG18A5HU+920HGC
VG18A5LU				VG18A5LU+920HGA	VG18A5LU+920HGC
VG18A5HV		176 / 88		VG18A5HV+920HGA	VG18A5HV+920HGC
VG18A5LV				VG18A5LV+920HGA	VG18A5LV+920HGC
VG18A5HW		211 / 105		VG18A5HW+920HGA	VG18A5HW+920HGC
VG18A5LW				VG18A5LW+920HGA	VG18A5LW+920HGC
VG18A5JU	4	117 / 74	50	VG18A5JU+920HGA	VG18A5JU+920HGC
VG18A5JV		176 / 88		VG18A5JV+920HGA	VG18A5JV+920HGC
VG18A5MW		190 / 190		VG18A5MW+920HGA	VG18A5MW+920HGC
VG18A5NY	5	290 / 190		VG18A5NY+920HGA	VG18A5NY+920HGC
VG18A5PZ	6	350 / 180		VG18A5PZ+920HGA	VG18A5PZ+920HGC

The performance specifications are nominal and conform to acceptable industry standards. For applications at conditions beyond these specifications, consult the local Johnson Controls office. Johnson Controls shall not be liable for damages resulting from misapplication or misuse of its products. © 2018 Johnson Controls.

VG1000 Series Flanged Ball Valves Catalog Page (Continued)

Flanged Stainless Steel Trim Ball Valves with Spring Return Electric Actuators without Switches (Part 1 of 2)

Valve	Size, in.	Cv	Closeoff PSIG	AC 24 V			AC 120 V
				Floating	DC 0 to 10 V Prop.	On/Off	On/Off
				M9220-AGA-3	M9220-GGA-3	M9220-BGA-3	M9220-BAA-3
Two-Way – Spring Return – Valve Open (Normally Open) – without Switches							
VG12A5GS	2-1/2	47	100	VG12A5GS+92NAGA	VG12A5GS+92NGGA	VG12A5GS+92NBGA	VG12A5GS+92NBAA
VG12A5KS				VG12A5KS+92NAGA	VG12A5KS+92NGGA	VG12A5KS+92NBGA	VG12A5KS+92NBAA
VG12A5GT		74		VG12A5GT+92NAGA	VG12A5GT+92NGGA	VG12A5GT+92NBGA	VG12A5GT+92NBAA
VG12A5KT				VG12A5KT+92NAGA	VG12A5KT+92NGGA	VG12A5KT+92NBGA	VG12A5KT+92NBAA
VG12A5GU		117		VG12A5GU+92NAGA	VG12A5GU+92NGGA	VG12A5GU+92NBGA	VG12A5GU+92NBAA
VG12A5KU				VG12A5KU+92NAGA	VG12A5KU+92NGGA	VG12A5KU+92NBGA	VG12A5KU+92NBAA
VG12A5HT	3	74	100	VG12A5HT+92NAGA	VG12A5HT+92NGGA	VG12A5HT+92NBGA	VG12A5HT+92NBAA
VG12A5LT				VG12A5LT+92NAGA	VG12A5LT+92NGGA	VG12A5LT+92NBGA	VG12A5LT+92NBAA
VG12A5HU		117		VG12A5HU+92NAGA	VG12A5HU+92NGGA	VG12A5HU+92NBGA	VG12A5HU+92NBAA
VG12A5LU				VG12A5LU+92NAGA	VG12A5LU+92NGGA	VG12A5LU+92NBGA	VG12A5LU+92NBAA
VG12A5HV		176		VG12A5HV+92NAGA	VG12A5HV+92NGGA	VG12A5HV+92NBGA	VG12A5HV+92NBAA
VG12A5LV				VG12A5LV+92NAGA	VG12A5LV+92NGGA	VG12A5LV+92NBGA	VG12A5LV+92NBAA
VG12A5HW		211		VG12A5HW+92NAGA	VG12A5HW+92NGGA	VG12A5HW+92NBGA	VG12A5HW+92NBAA
VG12A5LW				VG12A5LW+92NAGA	VG12A5LW+92NGGA	VG12A5LW+92NBGA	VG12A5LW+92NBAA
VG12A5JU	4	117	100	VG12A5JU+92NAGA	VG12A5JU+92NGGA	VG12A5JU+92NBGA	VG12A5JU+92NBAA
VG12A5JV		176		VG12A5JV+92NAGA	VG12A5JV+92NGGA	VG12A5JV+92NBGA	VG12A5JV+92NBAA
VG12A5MW		190		VG12A5MW+92NAGA	VG12A5MW+92NGGA	VG12A5MW+92NBGA	VG12A5MW+92NBAA
VG12A5NY	5	290		VG12A5NY+92NAGA	VG12A5NY+92NGGA	VG12A5NY+92NBGA	VG12A5NY+92NBAA
VG12A5PZ	6	350		VG12A5PZ+92NAGA	VG12A5PZ+92NGGA	VG12A5PZ+92NBGA	VG12A5PZ+92NBAA
Two-Way – Spring Return – Valve Closed (Normally Closed) – without Switches							
VG12A5GS	2-1/2	47	100	VG12A5GS+94NAGA	VG12A5GS+94NGGA	VG12A5GS+94NBGA	VG12A5GS+94NBAA
VG12A5KS				VG12A5KS+94NAGA	VG12A5KS+94NGGA	VG12A5KS+94NBGA	VG12A5KS+94NBAA
VG12A5GT		74		VG12A5GT+94NAGA	VG12A5GT+94NGGA	VG12A5GT+94NBGA	VG12A5GT+94NBAA
VG12A5KT				VG12A5KT+94NAGA	VG12A5KT+94NGGA	VG12A5KT+94NBGA	VG12A5KT+94NBAA
VG12A5GU		117		VG12A5GU+94NAGA	VG12A5GU+94NGGA	VG12A5GU+94NBGA	VG12A5GU+94NBAA
VG12A5KU				VG12A5KU+94NAGA	VG12A5KU+94NGGA	VG12A5KU+94NBGA	VG12A5KU+94NBAA
VG12A5HT	3	74	100	VG12A5HT+94NAGA	VG12A5HT+94NGGA	VG12A5HT+94NBGA	VG12A5HT+94NBAA
VG12A5LT				VG12A5LT+94NAGA	VG12A5LT+94NGGA	VG12A5LT+94NBGA	VG12A5LT+94NBAA
VG12A5HU		117		VG12A5HU+94NAGA	VG12A5HU+94NGGA	VG12A5HU+94NBGA	VG12A5HU+94NBAA
VG12A5LU				VG12A5LU+94NAGA	VG12A5LU+94NGGA	VG12A5LU+94NBGA	VG12A5LU+94NBAA
VG12A5HV		176		VG12A5HV+94NAGA	VG12A5HV+94NGGA	VG12A5HV+94NBGA	VG12A5HV+94NBAA
VG12A5LV				VG12A5LV+94NAGA	VG12A5LV+94NGGA	VG12A5LV+94NBGA	VG12A5LV+94NBAA
VG12A5HW		211		VG12A5HW+94NAGA	VG12A5HW+94NGGA	VG12A5HW+94NBGA	VG12A5HW+94NBAA
VG12A5LW				VG12A5LW+94NAGA	VG12A5LW+94NGGA	VG12A5LW+94NBGA	VG12A5LW+94NBAA
VG12A5JU	4	117	100	VG12A5JU+94NAGA	VG12A5JU+94NGGA	VG12A5JU+94NBGA	VG12A5JU+94NBAA
VG12A5JV		176		VG12A5JV+94NAGA	VG12A5JV+94NGGA	VG12A5JV+94NBGA	VG12A5JV+94NBAA
VG12A5MW		190		VG12A5MW+94NAGA	VG12A5MW+94NGGA	VG12A5MW+94NBGA	VG12A5MW+94NBAA
VG12A5NY	5	290		VG12A5NY+94NAGA	VG12A5NY+94NGGA	VG12A5NY+94NBGA	VG12A5NY+94NBAA
VG12A5PZ	6	350		VG12A5PZ+94NAGA	VG12A5PZ+94NGGA	VG12A5PZ+94NBGA	VG12A5PZ+94NBAA

The performance specifications are nominal and conform to acceptable industry standards. For applications at conditions beyond these specifications, consult the local Johnson Controls office. Johnson Controls shall not be liable for damages resulting from misapplication or misuse of its products. © 2018 Johnson Controls.

VG1000 Series Flanged Ball Valves Catalog Page (Continued)

Flanged Stainless Steel Trim Ball Valves with Spring Return Electric Actuators without Switches (Part 2 of 2)

Valve	Size, in.	Cv	Closeoff PSIG	AC 24 V			AC 120 V
				Floating	DC 0 to 10 V Prop.	On/Off	On/Off
				M9220-AGA-3	M9220-GGA-3	M9220-BGA-3	M9220-BAA-3
Three-Way – Spring Return Counterclockwise – Port A (Coil) Open to Port AB (Common) – without Switches							
VG18A5GS	2-1/2	47 / 29	50	VG18A5GS+92NAGA	VG18A5GS+92NGGA	VG18A5GS+92NBGA	VG18A5GS+92NBAA
VG18A5K				VG18A5KS+92NAGA	VG18A5KS+92NGGA	VG18A5KS+92NBGA	VG18A5KS+92NBAA
VG18A5GT		74 / 47		VG18A5GT+92NAGA	VG18A5GT+92NGGA	VG18A5GT+92NBGA	VG18A5GT+92NBAA
VG18A5KT				VG18A5KT+92NAGA	VG18A5KT+92NGGA	VG18A5KT+92NBGA	VG18A5KT+92NBAA
VG18A5GU		117 / 74		VG18A5GU+92NAGA	VG18A5GU+92NGGA	VG18A5GU+92NBGA	VG18A5GU+92NBAA
VG18A5KU				VG18A5KU+92NAGA	VG18A5KU+92NGGA	VG18A5KU+92NBGA	VG18A5KU+92NBAA
VG18A5HT	3	74 / 47	50	VG18A5HT+92NAGA	VG18A5HT+92NGGA	VG18A5HT+92NBGA	VG18A5HT+92NBAA
VG18A5LT				VG18A5LT+92NAGA	VG18A5LT+92NGGA	VG18A5LT+92NBGA	VG18A5LT+92NBAA
VG18A5HU		117 / 74		VG18A5HU+92NAGA	VG18A5HU+92NGGA	VG18A5HU+92NBGA	VG18A5HU+92NBAA
VG18A5LU				VG18A5LU+92NAGA	VG18A5LU+92NGGA	VG18A5LU+92NBGA	VG18A5LU+92NBAA
VG18A5HV		176 / 88		VG18A5HV+92NAGA	VG18A5HV+92NGGA	VG18A5HV+92NBGA	VG18A5HV+92NBAA
VG18A5LV				VG18A5LV+92NAGA	VG18A5LV+92NGGA	VG18A5LV+92NBGA	VG18A5LV+92NBAA
VG18A5HW		211 / 105		VG18A5HW+92NAGA	VG18A5HW+92NGGA	VG18A5HW+92NBGA	VG18A5HW+92NBAA
VG18A5LW				VG18A5LW+92NAGA	VG18A5LW+92NGGA	VG18A5LW+92NBGA	VG18A5LW+92NBAA
VG18A5JU	4	117 / 74	50	VG18A5JU+92NAGA	VG18A5JU+92NGGA	VG18A5JU+92NBGA	VG18A5JU+92NBAA
VG18A5JV		176 / 88		VG18A5JV+92NAGA	VG18A5JV+92NGGA	VG18A5JV+92NBGA	VG18A5JV+92NBAA
VG18A5MW		190 / 190		VG18A5MW+92NAGA	VG18A5MW+92NGGA	VG18A5MW+92NBGA	VG18A5MW+92NBAA
VG18A5NY	5	290 / 190		VG18A5NY+92NAGA	VG18A5NY+92NGGA	VG18A5NY+92NBGA	VG18A5NY+92NBAA
VG18A5PZ	6	350 / 180		VG18A5PZ+92NAGA	VG18A5PZ+92NGGA	VG18A5PZ+92NBGA	VG18A5PZ+92NBAA
Three-Way – Spring Return Clockwise – Port B (Bypass) Open to Port AB (Common) – without Switches							
VG18A5GS	2-1/2	47 / 29	50	VG18A5GS+94NAGA	VG18A5GS+94NGGA	VG18A5GS+94NBGA	VG18A5GS+94NBAA
VG18A5KS				VG18A5KS+94NAGA	VG18A5KS+94NGGA	VG18A5KS+94NBGA	VG18A5KS+94NBAA
VG18A5GT		74 / 47		VG18A5GT+94NAGA	VG18A5GT+94NGGA	VG18A5GT+94NBGA	VG18A5GT+94NBAA
VG18A5KT				VG18A5KT+94NAGA	VG18A5KT+94NGGA	VG18A5KT+94NBGA	VG18A5KT+94NBAA
VG18A5GU		117 / 74		VG18A5GU+94NAGA	VG18A5GU+94NGGA	VG18A5GU+94NBGA	VG18A5GU+94NBAA
VG18A5KU				VG18A5KU+94NAGA	VG18A5KU+94NGGA	VG18A5KU+94NBGA	VG18A5KU+94NBAA
VG18A5HT	3	74 / 47	50	VG18A5HT+94NAGA	VG18A5HT+94NGGA	VG18A5HT+94NBGA	VG18A5HT+94NBAA
VG18A5LT				VG18A5LT+94NAGA	VG18A5LT+94NGGA	VG18A5LT+94NBGA	VG18A5LT+94NBAA
VG18A5HU		117 / 74		VG18A5HU+94NAGA	VG18A5HU+94NGGA	VG18A5HU+94NBGA	VG18A5HU+94NBAA
VG18A5LU				VG18A5LU+94NAGA	VG18A5LU+94NGGA	VG18A5LU+94NBGA	VG18A5LU+94NBAA
VG18A5HV		176 / 88		VG18A5HV+94NAGA	VG18A5HV+94NGGA	VG18A5HV+94NBGA	VG18A5HV+94NBAA
VG18A5LV				VG18A5LV+94NAGA	VG18A5LV+94NGGA	VG18A5LV+94NBGA	VG18A5LV+94NBAA
VG18A5HW		211 / 105		VG18A5HW+94NAGA	VG18A5HW+94NGGA	VG18A5HW+94NBGA	VG18A5HW+94NBAA
VG18A5LW				VG18A5LW+94NAGA	VG18A5LW+94NGGA	VG18A5LW+94NBGA	VG18A5LW+94NBAA
VG18A5JU	4	117 / 74	50	VG18A5JU+94NAGA	VG18A5JU+94NGGA	VG18A5JU+94NBGA	VG18A5JU+94NBAA
VG18A5JV		176 / 88		VG18A5JV+94NAGA	VG18A5JV+94NGGA	VG18A5JV+94NBGA	VG18A5JV+94NBAA
VG18A5MW		190/ 190		VG18A5MW+94NAGA	VG18A5MW+94NGGA	VG18A5MW+94NBGA	VG18A5MW+94NBAA
VG18A5NY	5	290 / 190		VG18A5NY+94NAGA	VG18A5NY+94NGGA	VG18A5NY+94NBGA	VG18A5NY+94NBAA
VG18A5PZ	6	350 / 180		VG18A5PZ+94NAGA	VG18A5PZ+94NGGA	VG18A5PZ+94NBGA	VG18A5PZ+94NBAA

The performance specifications are nominal and conform to acceptable industry standards. For applications at conditions beyond these specifications, consult the local Johnson Controls office. Johnson Controls shall not be liable for damages resulting from misapplication or misuse of its products. © 2018 Johnson Controls.

VG1000 Series Flanged Ball Valves Catalog Page (Continued)

Flanged Stainless Steel Trim Ball Valves with Spring Return Electric Actuators with Two Switches (Part 1 of 2)

Valve	Size, in.	Cv	Closeoff PSIG	AC 24 V			AC 120 V
				Floating	DC 0 to 10 V Prop.	On/Off	On/Off
				M9220-AGC-3	M9220-GGC-3	M9220-BGC-3	M9220-BAC-3
Two-Way – Spring Return – Valve Open (Normally Open) – with Two Auxiliary Switches							
VG12A5GS	2-1/2	47	100	VG12A5GS+92NAGC	VG12A5GS+92NGGC	VG12A5GS+92NBGC	VG12A5GS+92NBAC
VG12A5KS				VG12A5KS+92NAGC	VG12A5KS+92NGGC	VG12A5KS+92NBGC	VG12A5KS+92NBAC
VG12A5GT		74		VG12A5GT+92NAGC	VG12A5GT+92NGGC	VG12A5GT+92NBGC	VG12A5GT+92NBAC
VG12A5KT				VG12A5KT+92NAGC	VG12A5KT+92NGGC	VG12A5KT+92NBGC	VG12A5KT+92NBAC
VG12A5GU		117		VG12A5GU+92NAGC	VG12A5GU+92NGGC	VG12A5GU+92NBGC	VG12A5GU+92NBAC
VG12A5KU				VG12A5KU+92NAGC	VG12A5KU+92NGGC	VG12A5KU+92NBGC	VG12A5KU+92NBAC
VG12A5HT	3	74	100	VG12A5HT+92NAGC	VG12A5HT+92NGGC	VG12A5HT+92NBGC	VG12A5HT+92NBAC
VG12A5LT				VG12A5LT+92NAGC	VG12A5LT+92NGGC	VG12A5LT+92NBGC	VG12A5LT+92NBAC
VG12A5HU		117		VG12A5HU+92NAGC	VG12A5HU+92NGGC	VG12A5HU+92NBGC	VG12A5HU+92NBAC
VG12A5LU				VG12A5LU+92NAGC	VG12A5LU+92NGGC	VG12A5LU+92NBGC	VG12A5LU+92NBAC
VG12A5HV		176		VG12A5HV+92NAGC	VG12A5HV+92NGGC	VG12A5HV+92NBGC	VG12A5HV+92NBAC
VG12A5LV				VG12A5LV+92NAGC	VG12A5LV+92NGGC	VG12A5LV+92NBGC	VG12A5LV+92NBAC
VG12A5HW		211		VG12A5HW+92NAGC	VG12A5HW+92NGGC	VG12A5HW+92NBGC	VG12A5HW+92NBAC
VG12A5LW				VG12A5LW+92NAGC	VG12A5LW+92NGGC	VG12A5LW+92NBGC	VG12A5LW+92NBAC
VG12A5JU	4	117	100	VG12A5JU+92NAGC	VG12A5JU+92NGGC	VG12A5JU+92NBGC	VG12A5JU+92NBAC
VG12A5JV		176		VG12A5JV+92NAGC	VG12A5JV+92NGGC	VG12A5JV+92NBGC	VG12A5JV+92NBAC
VG12A5MW		190		VG12A5MW+92NAGC	VG12A5MW+92NGGC	VG12A5MW+92NBGC	VG12A5MW+92NBAC
VG12A5NY	5	290		VG12A5NY+92NAGC	VG12A5NY+92NGGC	VG12A5NY+92NBGC	VG12A5NY+92NBAC
VG12A5PZ	6	350		VG12A5PZ+92NAGC	VG12A5PZ+92NGGC	VG12A5PZ+92NBGC	VG12A5PZ+92NBAC
Two-Way – Spring Return – Valve Closed (Normally Closed) – with Two Auxiliary Switches							
VG12A5GS	2-1/2	47	100	VG12A5GS+94NAGC	VG12A5GS+94NGGC	VG12A5GS+94NBGC	VG12A5GS+94NBAC
VG12A5KS				VG12A5KS+94NAGC	VG12A5KS+94NGGC	VG12A5KS+94NBGC	VG12A5KS+94NBAC
VG12A5GT		74		VG12A5GT+94NAGC	VG12A5GT+94NGGC	VG12A5GT+94NBGC	VG12A5GT+94NBAC
VG12A5KT				VG12A5KT+94NAGC	VG12A5KT+94NGGC	VG12A5KT+94NBGC	VG12A5KT+94NBAC
VG12A5GU		117		VG12A5GU+94NAGC	VG12A5GU+94NGGC	VG12A5GU+94NBGC	VG12A5GU+94NBAC
VG12A5KU				VG12A5KU+94NAGC	VG12A5KU+942NGGC	VG12A5KU+94NBGC	VG12A5KU+94NBAC
VG12A5HT	3	74	100	VG12A5HT+94NAGC	VG12A5HT+94NGGC	VG12A5HT+94NBGC	VG12A5HT+94NBAC
VG12A5LT				VG12A5LT+94NAGC	VG12A5LT+94NGGC	VG12A5LT+94NBGC	VG12A5LT+94NBAC
VG12A5HU		117		VG12A5HU+94NAGC	VG12A5HU+94NGGC	VG12A5HU+94NBGC	VG12A5HU+94NBAC
VG12A5LU				VG12A5LU+94NAGC	VG12A5LU+94NGGC	VG12A5LU+94NBGC	VG12A5LU+94NBAC
VG12A5HV		176		VG12A5HV+94NAGC	VG12A5HV+94NGGC	VG12A5HV+94NBGC	VG12A5HV+94NBAC
VG12A5LV				VG12A5LV+94NAGC	VG12A5LV+94NGGC	VG12A5LV+94NBGC	VG18A5LV+94NBAC
VG12A5HW		211		VG12A5HW+94NAGC	VG12A5HW+94NGGC	VG12A5HW+94NBGC	VG12A5HW+94NBAC
VG12A5LW				VG12A5LW+94NAGC	VG12A5LW+94NGGC	VG12A5LW+94NBGC	VG12A5LW+94NBAC
VG12A5JU	4	117	100	VG12A5JU+94NAGC	VG12A5JU+94NGGC	VG12A5JU+94NBGC	VG12A5JU+94NBAC
VG12A5JV		176		VG12A5JV+94NAGC	VG12A5JV+94NGGC	VG12A5JV+94NBGC	VG12A5JV+94NBAC
VG12A5MW		190		VG12A5MW+94NAGC	VG12A5MW+94NGGC	VG12A5MW+94NBGC	VG12A5MW+94NBAC
VG12A5NY	5	290		VG12A5NY+94NAGC	VG12A5NY+94NGGC	VG12A5NY+94NBGC	VG12A5NY+94NBAC
VG12A5PZ	6	350		VG12A5PZ+94NAGC	VG12A5PZ+94NGGC	VG12A5PZ+94NBGC	VG12A5PZ+94NBAC

The performance specifications are nominal and conform to acceptable industry standards. For applications at conditions beyond these specifications, consult the local Johnson Controls office. Johnson Controls shall not be liable for damages resulting from misapplication or misuse of its products. © 2018 Johnson Controls. **www.johnsoncontrols.com**

VG1000 Series Flanged Ball Valves Catalog Page (Continued)

Flanged Stainless Steel Trim Ball Valves with Spring Return Electric Actuators with Two Switches (Part 2 of 2)

Valve	Size, in.	Cv	Closeoff PSIG	AC 24 V			AC 120 V
				Floating	DC 0 to 10 V Prop.	On/Off	On/Off
				M9220-AGC-3	M9220-GGC-3	M9220-BGC-3	M9220-BAC-3
Three-Way – Spring Return Counterclockwise – Port A (Coil) Open to Port AB (Common) – with Two Auxiliary Switches							
VG18A5GS	2-1/2	47 / 29	50	VG18A5GS+92NAGC	VG18A5GS+92NGGC	VG18A5GS+92NBGC	VG18A5GS+92NBAC
VG18A5KS				VG18A5KS+92NAGC	VG18A5KS+92NGGC	VG18A5KS+92NBGC	VG18A5KS+92NBAC
VG18A5GT		74 / 47		VG18A5GT+92NAGC	VG18A5GT+92NGGC	VG18A5GT+92NBGC	VG18A5GT+92NBAC
VG18A5KT				VG18A5KT+92NAGC	VG18A5KT+92NGGC	VG18A5KT+92NBGC	VG18A5KT+92NBAC
VG18A5GU		117 / 74		VG18A5GU+92NAGC	VG18A5GU+92NGGC	VG18A5GU+92NBGC	VG18A5GU+92NBAC
VG18A5KU				VG18A5KU+92NAGC	VG18A5KU+92NGGC	VG18A5KU+92NBGC	VG18A5KU+92NBAC
VG18A5HT	3	74 / 47	50	VG18A5HT+92NAGC	VG18A5HT+92NGGC	VG18A5HT+92NBGC	VG18A5HT+92NBAC
VG18A5LT				VG18A5LT+92NAGC	VG18A5LT+92NGGC	VG18A5LT+92NBGC	VG18A5LT+92NBAC
VG18A5HU		117 / 74		VG18A5HU+92NAGC	VG18A5HU+92NGGC	VG18A5HU+92NBGC	VG18A5HU+92NBAC
VG18A5LU				VG18A5LU+92NAGC	VG18A5LU+92NGGC	VG18A5LU+92NBGC	VG18A5LU+92NBAC
VG18A5HV		176 / 88		VG18A5HV+92NAGC	VG18A5HV+92NGGC	VG18A5HV+92NBGC	VG18A5HV+92NBAC
VG18A5LV				VG18A5LV+92NAGC	VG18A5LV+92NGGC	VG18A5LV+92NBGC	VG18A5LV+92NBAC
VG18A5HW		211 / 105		VG18A5HW+92NAGC	VG18A5HW+92NGGC	VG18A5HW+92NBGC	VG18A5HW+92NBAC
VG18A5LW				VG18A5LW+92NAGC	VG18A5LW+92NGGC	VG18A5LW+92NBGC	VG18A5LW+92NBAC
VG18A5JU	4	117 / 74	50	VG18A5JU+92NAGC	VG18A5JU+92NGGC	VG18A5JU+92NBGC	VG18A5JU+92NBAC
VG18A5JV		176 / 88		VG18A5JV+92NAGC	VG18A5JV+92NGGC	VG18A5JV+92NBGC	VG18A5JV+92NBAC
VG18A5MW		190 / 190		VG18A5MW+92NAGC	VG18A5MW+92NGGC	VG18A5MW+92NBGC	VG18A5MW+92NBAC
VG18A5NY	5	290 / 190		VG18A5NY+92NAGC	VG18A5NY+92NGGC	VG18A5NY+92NBGC	VG18A5NY+92NBAC
VG18A5PZ	6	350 / 180		VG18A5PZ+92NAGC	VG18A5PZ+92NGGC	VG18A5PZ+92NBGC	VG18A5PZ+92NBAC
Three-Way – Spring Return Clockwise – Port B (Bypass) Open to Port AB (Common) – with Two Auxiliary Switches							
VG18A5GS	2-1/2	47 / 29	50	VG18A5GS+94NAGC	VG18A5GS+94NGGC	VG18A5GS+94NBGC	VG18A5GS+94NBAC
VG18A5KS				VG18A5KS+94NAGC	VG18A5KS+94NGGC	VG18A5KS+94NBGC	VG18A5KS+94NBAC
VG18A5GT		74 / 47		VG18A5GT+94NAGC	VG18A5GT+94NGGC	VG18A5GT+94NBGC	VG18A5GT+94NBAC
VG18A5KT				VG18A5KT+94NAGC	VG18A5KT+94NGGC	VG18A5KT+94NBGC	VG18A5KT+94NBAC
VG18A5GU		117 / 74		VG18A5GU+94NAGC	VG18A5GU+94NGGC	VG18A5GU+94NBGC	VG18A5GU+94NBAC
VG18A5KU				VG18A5KU+94NAGC	VG18A5KU+94NGGC	VG18A5KU+94NBGC	VG18A5KU+94NBAC
VG18A5HT	3	74 / 47	50	VG18A5HT+94NAGC	VG18A5HT+94NGGC	VG18A5HT+94NBGC	VG18A5HT+94NBAC
VG18A5LT				VG18A5LT+94NAGC	VG18A5LT+94NGGC	VG18A5LT+94NBGC	VG18A5LT+94NBAC
VG18A5HU		117 / 74		VG18A5HU+94NAGC	VG18A5HU+94NGGC	VG18A5HU+94NBGC	VG18A5HU+94NBAC
VG18A5LU				VG18A5LU+94NAGC	VG18A5LU+94NGGC	VG18A5LU+94NBGC	VG18A5LU+94NBAC
VG18A5HV		176 / 88		VG18A5HV+94NAGC	VG18A5HV+94NGGC	VG18A5HV+94NBGC	VG18A5HV+94NBAC
VG18A5LV				VG18A5LV+94NAGC	VG18A5LV+94NGGC	VG18A5LV+94NBGC	VG18A5LV+94NBAC
VG18A5HW		211 / 105		VG18A5HW+94NAGC	VG18A5HW+94NGGC	VG18A5HW+94NBGC	VG18A5HW+94NBAC
VG18A5LW				VG18A5LW+94NAGC	VG18A5LW+94NGGC	VG18A5LW+94NBGC	VG18A5LW+94NBAC
VG18A5JU	4	117 / 74	50	VG18A5JU+94NAGC	VG18A5JU+94NGGC	VG18A5JU+94NBGC	VG18A5JU+94NBAC
VG18A5JV		176 / 88		VG18A5JV+94NAGC	VG18A5JV+94NGGC	VG18A5JV+94NBGC	VG18A5JV+94NBAC
VG18A5MW		190 / 190		VG18A5MW+94NAGC	VG18A5MW+94NGGC	VG18A5MW+94NBGC	VG18A5MW+94NBAC
VG18A5NY	5	290 / 190		VG18A5NY+94NAGC	VG18A5NY+94NGGC	VG18A5NY+94NBGC	VG18A5NY+94NBAC
VG18A5PZ	6	350 / 180		VG18A5PZ+94NAGC	VG18A5PZ+94NGGC	VG18A5PZ+94NBGC	VG18A5PZ+94NBAC

The performance specifications are nominal and conform to acceptable industry standards. For applications at conditions beyond these specifications, consult the local Johnson Controls office. Johnson Controls shall not be liable for damages resulting from misapplication or misuse of its products. © 2018 Johnson Controls.

VG1000 Series Flanged Ball Valves Catalog Page (Continued)

Technical Specifications

VG1000 Series Flanged Ball Valves		
Service[1]		Hot water, chilled water, 50/50 Glycol solutions, and 25 psig (172 kPa) saturated steam for HVAC systems
Valve Fluid Temperature Limits		0 to 284°F (-18 to 140°C)
Valve Body Pressure/Temperature Rating	**Water**	ASME Class 150 250 psi at -20 to 100°F (29 to 38°C) 235 psi at 200°F(93°C) 218 psi at 284°F(140°C)
	Steam	25 psig (172 kPa) saturated steam for HVAC systems
Maximum Closeoff Pressure	**Two-Way**	100 psi (689 kPa)
	Three-Way	50 psi (345 kPa)
Maximum Recommended Operating Pressure Drop		30 psi (207 kPa) for quiet service
Flow Characteristics	**Two-Way**	Equal Percentage
	Three-Way	Equal Percentage Flow Characteristics of In-Line Port or Linear Percentage Flow Characteristics of Angle Port
Rangeability[2]		Greater than 500:1
Minimum Ambient Operating Temperature	**-4°F (-20°C)**	VA9320 Series Non-Spring Return Actuators
	-40°F (-40°C)	M9220 Series Spring Return Actuators
Maximum Ambient Operating Temperature[3]	**122°F (50°C)**	VA9320 Series Non-Spring Return Actuators
	131°F (55°C)	M9220 Series Spring Return Actuators
Leakage	**Two- or Three-Way**	0.01% of Maximum Flow, Control Port, ANSI/FCI 70-2, Class 4
	Three-Way	1% of Maximum Flow, Bypass Port
End Connections		ASME Class 150 Flange
Materials	**Body**	Brass
	Flanges	Ductile Iron
	Ball	300 Series Stainless Steel
	Stem	300 Series Stainless Steel
	Seats	Graphite Reinforced PTFE with EPDM O-Ring Backing
	Stem Seals	EPDM O-Rings
	Flow Control Disk	Amodel AS-1145HS Polyphthalamide Resin
Compliance CE	**Europe**	CE Mark - Johnson Controls declares that this product is in compliance with the essential requirements and other relevant provisions of the Pressure Equipment Directive (PED).

1. Refer to the VDI 2035 Guideline for proper water treatment.
2. Rangeability is defined as the ratio of maximum controllable flow to minimum controllable flow.
3. In steam applications, install the valve with the stem horizontal to the piping and wrap the valve and piping with insulation.

The performance specifications are nominal and conform to acceptable industry standards. For applications at conditions beyond these specifications, consult the local Johnson Controls office. Johnson Controls shall not be liable for damages resulting from misapplication or misuse of its products. © 2018 Johnson Controls.

Code No. LIT-1900225
Issued January 6, 2015

VG1000 Series Three-Way, Stainless Steel Trim, NPT End Connections Ball Valves with Spring-Return Electric Actuators without Switches

Description

VG1000 Series Ball Valves are designed to regulate the flow of hot or chilled water and, for some models, low-pressure steam in response to the demand of a controller in HVAC systems. Available in sizes 1/2 through 2 in. (DN15 through DN50), this family of two- and three-way forged brass valves is factory or field mounted to Johnson Controls® VA9104, M9106, M9109, and M9100 Series Non-Spring-Return and VA9203 and VA9208 Series Spring Return Electric Actuators for on/off, floating, or proportional control.

Refer to the *VG1000 Series Forged Brass Ball Valves Product Bulletin (LIT-977132)* for important product application information.

AHU-3: REHEAT COIL VALVE

Features

- Forged Brass Body — provides 580 psig static pressure rating.
- 300 Series Stainless Steel Ball and Stem Assembly — tolerates high-temperature water or 15 psi saturated steam with fluid temperatures of -22 to 284°F (-30 to 140°C) or where a higher degree of corrosion protection is desired.
- 500:1 Rangeability — provides accurate control under all load conditions.
- Maintenance-Free Design — performs without failure in excess of 200,000 full stroke cycles in iron-oxide contaminated water.

Repair Information

If the VG1000 Series Ball Valve fails to operate within its specifications, replace the valve body, actuator, or entire assembly. For replacement parts, contact the nearest Johnson Controls representative.



VG1000 Series Three-Way, Spring-Return, Stainless Steel Ball and Stem Ball Valve Assemblies without End Switches

Selection Charts

Three-Way — Spring Return without Switches (Not Rated for Steam Service) (Part 1 of 2)

Fluid Temperatures: -22 to 212°F (-30 to 100°C) Not Rated for Steam Service				AC 24 V			AC 85–264 V (VA9203) AC 120 V (VA9208)
Valve	**Size, in.**	**Cv (Port A/B)**	**Closeoff psig**	**Floating**	**0 to 10 VDC Proportional**	**On/Off**	**On/Off**
				Spring Return Port A Open — Valve Spring Return Counterclockwise			
				VA9203-AGA-2Z	**VA9203-GGA-2Z**	**VA9203-BGA-2**	**VA9203-BUA-2**
VG1845AD	1/2	1.2[1]	200	VG1845AD+923AGA	VG1845AD+923GGA	VG1845AD+923BGA	VG1845AD+923BUA
VG1845AE		1.9[1]		VG1845AE+923AGA	VG1845AE+923GGA	VG1845AE+923BGA	VG1845AE+923BUA
VG1845AF		2.9[1]		VG1845AF+923AGA	VG1845AF+923GGA	VG1845AF+923BGA	VG1845AF+923BUA
VG1845AG		4.7[1]		VG1845AG+923AGA	VG1845AG+923GGA	VG1845AG+923BGA	VG1845AG+923BUA
VG1845AL		7.4[1]		VG1845AL+923AGA	VG1845AL+923GGA	VG1845AL+923BGA	VG1845AL+923BUA
VG1845AN		11.7		VG1845AN+923AGA	VG1845AN+923GGA	VG1845AN+923BGA	VG1845AN+923BUA
VG1845BG	3/4	4.7[1]	200	VG1845BG+923AGA	VG1845BG+923GGA	VG1845BG+923BGA	VG1845BG+923BUA
VG1845BL		7.4[1]		VG1845BL+923AGA	VG1845BL+923GGA	VG1845BL+923BGA	VG1845BL+923BUA
VG1845BN		11.7		VG1845BN+923AGA	VG1845BN+923GGA	VG1845BN+923BGA	VG1845BN+923BUA
VG1845CL	1	7.4[1]	200	VG1845CL+923AGA	VG1845CL+923GGA	VG1845CL+923BGA	VG1845CL+923BUA
VG1845CN		11.7[1]		VG1845CN+923AGA	VG1845CN+923GGA	VG1845CN+923BGA	VG1845CN+923BUA
VG1845CP		18.7		VG1845CP+923AGA	VG1845CP+923GGA	VG1845CP+923BGA	VG1845CP+923BUA
				Spring Return Port A Open — Valve Spring Return Counterclockwise			
				VA9208-AGA-2	**VA9208-GGA-2**	**VA9208-BGA-3**	**VA9208-BAA-3**
VG1845DN	1-1/4	11.7[1]	200	VG1845DN+928AGA	VG1845DN+928GGA	VG1845DN+938BGA	VG1845DN+938BAA
VG1845DP		18.7[1]		VG1845DP+928AGA	VG1845DP+928GGA	VG1845DP+938BGA	VG1845DP+938BAA
VG1845DR		29.2		VG1845DR+928AGA	VG1845DR+928GGA	VG1845DR+938BGA	VG1845DR+938BAA
VG1845EP	1-1/2	18.7[1]	200	VG1845EP+928AGA	VG1845EP+928GGA	VG1845EP+938BGA	VG1845EP+938BAA
VG1845ER		29.2[1]		VG1845ER+928AGA	VG1845ER+928GGA	VG1845ER+938BGA	VG1845ER+938BAA
VG1845ES		46.8		VG1845ES+928AGA	VG1845ES+928GGA	VG1845ES+938BGA	VG1845ES+938BAA
VG1845FR	2	29.2[1]	200	VG1845FR+928AGA	VG1845FR+928GGA	VG1845FR+938BGA	VG1845FR+938BAA
VG1845FS		46.8[1]		VG1845FS+928AGA	VG1845FS+928GGA	VG1845FS+938BGA	VG1845FS+938BAA
VG1845FT		73.7		VG1845FT+928AGA	VG1845FT+928GGA	VG1845FT+938BGA	VG1845FT+938BAA

The performance specifications are nominal and conform to acceptable industry standards. For applications at conditions beyond these specifications, consult the local Johnson Controls office. Johnson Controls, Inc. shall not be liable for damages resulting from misapplication or misuse of its products. © 2015 Johnson Controls, Inc.

VG1000 Series Three-Way, Stainless Steel Trim, NPT End Connections Ball Valves with Spring-Return Electric Actuators without Switches (Continued)

Three-Way — Spring Return without Switches (Not Rated for Steam Service) (Part 2 of 2)

Fluid Temperatures: -22 to 212°F (-30 to 100°C) Not Rated for Steam Service				AC 24 V			AC 85–264 V (VA9203) AC 120 V (VA9208)
Valve	**Size, in.**	**Cv (Port A/B)**	**Closeoff psig**	**Floating**	**0 to 10 VDC Proportional**	**On/Off**	**On/Off**
				Spring Return Port A Closed — Valve Spring Return Clockwise			
				VA9203-AGA-2Z	**VA9203-GGA-2Z**	**VA9203-BGA-2**	**VA9203-BUA-2**
VG1845AD	1/2	1.2[1]	200	VG1845AD+943AGA	VG1845AD+943GGA	VG1845AD+943BGA	VG1845AD+943BUA
VG1845AE		1.9[1]		VG1845AE+943AGA	VG1845AE+943GGA	VG1845AE+943BGA	VG1845AE+943BUA
VG1845AF		2.9[1]		VG1845AF+943AGA	VG1845AF+943GGA	VG1845AF+943BGA	VG1845AF+943BUA
VG1845AG		4.7[1]		VG1845AG+943AGA	VG1845AG+943GGA	VG1845AG+943BGA	VG1845AG+943BUA
VG1845AL		7.4[1]		VG1845AL+943AGA	VG1845AL+943GGA	VG1845AL+943BGA	VG1845AL+943BUA
VG1845AN		11.7		VG1845AN+943AGA	VG1845AN+943GGA	VG1845AN+943BGA	VG1845AN+943BUA
VG1845BG	3/4	4.7[1]	200	VG1845BG+943AGA	VG1845BG+943GGA	VG1845BG+943BGA	VG1845BG+943BUA
VG1845BL		7.4[1]		VG1845BL+943AGA	VG1845BL+943GGA	VG1845BL+943BGA	VG1845BL+943BUA
VG1845BN		11.7		VG1845BN+943AGA	VG1845BN+943GGA	VG1845BN+943BGA	VG1845BN+943BUA
VG1845CL	1	7.4[1]	200	VG1845CL+943AGA	VG1845CL+943GGA	VG1845CL+943BGA	VG1845CL+943BUA
VG1845CN		11.7[1]		VG1845CN+943AGA	VG1845CN+943GGA	VG1845CN+943BGA	VG1845CN+943BUA
VG1845CP		18.7		VG1845CP+943AGA	VG1845CP+943GGA	VG1845CP+943BGA	VG1845CP+943BUA
				Spring Return Port A Closed — Valve Spring Return Clockwise			
				VA9208-AGA-2	**VA9208-GGA-2**	**VA9208-BGA-3**	**VA9208-BAA-3**
VG1845DN	1-1/4	11.7[1]	200	VG1845DN+948AGA	VG1845DN+948GGA	VG1845DN+958BGA	VG1845DN+958BAA
VG1845DP		18.7[1]		VG1845DP+948AGA	VG1845DP+948GGA	VG1845DP+958BGA	VG1845DP+958BAA
VG1845DR		29.2		VG1845DR+948AGA	VG1845DR+948GGA	VG1845DR+958BGA	VG1845DR+958BAA
VG1845EP	1-1/2	18.7[1]	200	VG1845EP+948AGA	VG1845EP+948GGA	VG1845EP+958BGA	VG1845EP+958BAA
VG1845ER		29.2[1]		VG1845ER+948AGA	VG1845ER+948GGA	VG1845ER+958BGA	VG1845ER+958BAA
VG1845ES		46.8		VG1845ES+948AGA	VG1845ES+948GGA	VG1845ES+958BGA	VG1845ES+958BAA
VG1845FR	2	29.2[1]	200	VG1845FR+948AGA	VG1845FR+948GGA	VG1845FR+958BGA	VG1845FR+958BAA
VG1845FS		46.8[1]		VG1845FS+948AGA	VG1845FS+948GGA	VG1845FS+958BGA	VG1845FS+958BAA
VG1845FT		73.7		VG1845FT+948AGA	VG1845FT+948GGA	VG1845FT+958BGA	VG1845FT+958BAA

1. Valve has a characterizing disk.

Valve Assemblies with M9000-561 Thermal Barrier Installed — Rated for High-Temperature Fluid Service, Three-Way — Spring Return without Switches (Part 1 of 2)

Fluid Temperatures: -22 to 284°F (-30 to 140°C) Water and 15 psi Steam				AC 24 V			AC 85–264 V (VA9203) AC 120 V (VA9208)
Valve	**Size, in.**	**Cv (Port A/B)**	**Closeoff psig**	**Floating**	**0 to 10 VDC Proportional**	**On/Off**	**On/Off**
				Spring Return Port A Open — Valve Spring Return Counterclockwise			
				VA9203-AGA-2Z	**VA9203-GGA-2Z**	**VA9203-BGA-2**	**VA9203-BUA-2**
VG1845AD	1/2	1.2[1]	200	VG1845ADH923AGA	VG1845ADH923GGA	VG1845ADH923BGA	VG1845ADH923BUA
VG1845AE		1.9[1]		VG1845AEH923AGA	VG1845AEH923GGA	VG1845AEH923BGA	VG1845AEH923BUA
VG1845AF		2.9[1]		VG1845AFH923AGA	VG1845AFH923GGA	VG1845AFH923BGA	VG1845AFH923BUA
VG1845AG		4.7[1]		VG1845AGH923AGA	VG1845AGH923GGA	VG1845AGH923BGA	VG1845AGH923BUA
VG1845AL		7.4[1]		VG1845ALH923AGA	VG1845ALH923GGA	VG1845ALH923BGA	VG1845ALH923BUA
VG1845AN		11.7		VG1845ANH923AGA	VG1845ANH923GGA	VG1845ANH923BGA	VG1845ANH923BUA
VG1845BG	3/4	4.7[1]	200	VG1845BGH923AGA	VG1845BGH923GGA	VG1845BGH923BGA	VG1845BGH923BUA
VG1845BL		7.4[1]		VG1845BLH923AGA	VG1845BLH923GGA	VG1845BLH923BGA	VG1845BLH923BUA
VG1845BN		11.7		VG1845BNH923AGA	VG1845BNH923GGA	VG1845BNH923BGA	VG1845BNH923BUA
VG1845CL	1	7.4[1]	200	VG1845CLH923AGA	VG1845CLH923GGA	VG1845CLH923BGA	VG1845CLH923BUA
VG1845CN		11.7[1]		VG1845CNH923AGA	VG1845CNH923GGA	VG1845CNH923BGA	VG1845CNH923BUA
VG1845CP		18.7		VG1845CPH923AGA	VG1845CPH923GGA	VG1845CPH923BGA	VG1845CPH923BUA

The performance specifications are nominal and conform to acceptable industry standards. For applications at conditions beyond these specifications, consult the local Johnson Controls office. Johnson Controls, Inc. shall not be liable for damages resulting from misapplication or misuse of its products. © 2015 Johnson Controls, Inc.

VG1000 Series Three-Way, Stainless Steel Trim, NPT End Connections Ball Valves with Spring-Return Electric Actuators without Switches (Continued)

Valve Assemblies with M9000-561 Thermal Barrier Installed — Rated for High-Temperature Fluid Service, Three-Way — Spring Return without Switches (Part 2 of 2)

Fluid Temperatures: -22 to 284°F (-30 to 140°C) Water and 15 psi Steam				AC 24 V			AC 85–264 V (VA9203) AC 120 V (VA9208)
Valve	**Size, in.**	**Cv (Port A/B)**	**Closeoff psig**	**Floating**	**0 to 10 VDC Proportional**	**On/Off**	**On/Off**
				Spring Return Port A Open — Valve Spring Return Counterclockwise			
				VA9208-AGA-2	**VA9208-GGA-2**	**VA9208-BGA-3**	**VA9208-BAA-3**
VG1845DN	1-1/4	11.7[1]	200	VG1845DNH928AGA	VG1845DNH928GGA	VG1845DNH938BGA	VG1845DNH938BAA
VG1845DP		18.7[1]		VG1845DPH928AGA	VG1845DPH928GGA	VG1845DPH938BGA	VG1845DPH938BAA
VG1845DR		29.2		VG1845DRH928AGA	VG1845DRH928GGA	VG1845DRH938BGA	VG1845DRH938BAA
VG1845EP	1-1/2	18.7[1]	200	VG1845EPH928AGA	VG1845EPH928GGA	VG1845EPH938BGA	VG1845EPH938BAA
VG1845ER		29.2[1]		VG1845ERH928AGA	VG1845ERH928GGA	VG1845ERH938BGA	VG1845ERH938BAA
VG1845ES		46.8		VG1845ESH928AGA	VG1845ESH928GGA	VG1845ESH938BGA	VG1845ESH938BAA
VG1845FR	2	29.2[1]	200	VG1845FRH928AGA	VG1845FRH928GGA	VG1845FRH938BGA	VG1845FRH938BAA
VG1845FS		46.8[1]		VG1845FSH928AGA	VG1845FSH928GGA	VG1845FSH938BGA	VG1845FSH938BAA
VG1845FT		73.7		VG1845FTH928AGA	VG1845FTH928GGA	VG1845FTH938BGA	VG1845FTH938BAA
				Spring Return Port A Closed — Valve Spring Return Clockwise			
				VA9203-AGA-2Z	**VA9203-GGA-2Z**	**VA9203-BGA-2**	**VA9203-BUA-2**
VG1845AD	1/2	1.2[1]	200	VG1845ADH943AGA	VG1845ADH943GGA	VG1845ADH943BGA	VG1845ADH943BUA
VG1845AE		1.9[1]		VG1845AEH943AGA	VG1845AEH943GGA	VG1845AEH943BGA	VG1845AEH943BUA
VG1845AF		2.9[1]		VG1845AFH943AGA	VG1845AFH943GGA	VG1845AFH943BGA	VG1845AFH943BUA
VG1845AG		4.7[1]		VG1845AGH943AGA	VG1845AGH943GGA	VG1845AGH943BGA	VG1845AGH943BUA
VG1845AL		7.4[1]		VG1845ALH943AGA	VG1845ALH943GGA	VG1845ALH943BGA	VG1845ALH943BUA
VG1845AN		11.7		VG1845ANH943AGA	VG1845ANH943GGA	VG1845ANH943BGA	VG1845ANH943BUA
VG1845BG	3/4	4.7[1]	200	VG1845BGH943AGA	VG1845BGH943GGA	VG1845BGH943BGA	VG1845BGH943BUA
VG1845BL		7.4[1]		VG1845BLH943AGA	VG1845BLH943GGA	VG1845BLH943BGA	VG1845BLH943BUA
VG1845BN		11.7		VG1845BNH943AGA	VG1845BNH943GGA	VG1845BNH943BGA	VG1845BNH943BUA
VG1845CL	1	7.4[1]	200	VG1845CLH943AGA	VG1845CLH943GGA	VG1845CLH943BGA	VG1845CLH943BUA
VG1845CN		11.7[1]		VG1845CNH943AGA	VG1845CNH943GGA	VG1845CNH943BGA	VG1845CNH943BUA
VG1845CP		18.7		VG1845CPH943AGA	VG1845CPH943GGA	VG1845CPH943BGA	VG1845CPH943BUA
				Spring Return Port A Closed — Valve Spring Return Clockwise			
				VA9208-AGA-2	**VA9208-GGA-2**	**VA9208-BGA-3**	**VA9208-BAA-3**
VG1845DN	1-1/4	11.7[1]	200	VG1845DNH948AGA	VG1845DNH948GGA	VG1845DNH958BGA	VG1845DNH958BAA
VG1845DP		18.7[1]		VG1845DPH948AGA	VG1845DPH948GGA	VG1845DPH958BGA	VG1845DPH958BAA
VG1845DR		29.2		VG1845DRH948AGA	VG1845DRH948GGA	VG1845DRH958BGA	VG1845DRH958BAA
VG1845EP	1-1/2	18.7[1]	200	VG1845EPH948AGA	VG1845EPH948GGA	VG1845EPH958BGA	VG1845EPH958BAA
VG1845ER		29.2[1]		VG1845ERH948AGA	VG1845ERH948GGA	VG1845ERH958BGA	VG1845ERH958BAA
VG1845ES		46.8		VG1845ESH948AGA	VG1845ESH948GGA	VG1845ESH958BGA	VG1845ESH958BAA
VG1845FR	2	29.2[1]	200	VG1845FRH948AGA	VG1845FRH948GGA	VG1845FRH958BGA	VG1845FRH958BAA
VG1845FS		46.8[1]		VG1845FSH948AGA	VG1845FSH948GGA	VG1845FSH958BGA	VG1845FSH958BAA
VG1845FT		73.7		VG1845FTH948AGA	VG1845FTH948GGA	VG1845FTH958BGA	VG1845FTH958BAA

1. Valve has a characterizing disk.

The performance specifications are nominal and conform to acceptable industry standards. For applications at conditions beyond these specifications, consult the local Johnson Controls office. Johnson Controls, Inc. shall not be liable for damages resulting from misapplication or misuse of its products. © 2015 Johnson Controls, Inc.

VG1000 Series Three-Way, Stainless Steel Trim, NPT End Connections Ball Valves with Spring-Return Electric Actuators without Switches (Continued)

Technical Specifications

VG1000 Series Three-Way, Stainless Steel Trim, NPT End Connections Ball Valves with Spring-Return Electric Actuators without Switches		
Service[1]		Hot Water, Chilled Water, 50/50 Glycol Solutions, and 15 psig (103 kPa) Saturated Steam for HVAC Systems
Fluid Temperature Limits	**Water**	-22 to 284°F (-30 to 140°C)
	Steam	15 psig (103 kPa) at 250°F (121°C)
Maximum Actuator Fluid Temperature Limits	**212°F (100°C)**	VA9203 Series Spring-Return Actuators VA9208 Series Spring-Return Actuators
	284°F (140°C)	VA9203 Series Spring-Return Actuators with M9000-561 Thermal Barrier Installed VA9208 Series Spring-Return Actuators with M9000-561 Thermal Barrier Installed
Valve Body Pressure Rating	**Water**	580 psig (4,000 kPa) at 203°F (95°C) (PN40) 464 psig (3,196 kPa) at 284°F (140°C) (PN40)
	Steam	15 psig (103 kPa) Saturated Steam (Applies to VA9208 Series Spring Return Actuator with M9000-561 Thermal Barrier Installed)
Maximum Closeoff Pressure		200 psid (1,378 kPa)
Maximum Recommended Operating Pressure Drop		50 psid (340 kPa)
Flow Characteristics	**Three-Way**	Equal Percentage Flow Characteristics of In-Line Port A (Coil) and Linear Flow Characteristics of Angle Port B (Bypass)
Rangeability[2]		Greater than 500:1
Minimum Ambient Operating Temperature	**-22°F (-30°C)**	VA9203 Series Spring-Return Actuators
	-40°F (-40°C)	VA9208 Series Spring-Return Actuators
Maximum Ambient Operating Temperature[3] **(Limited by the Actuator and Linkage)**	**Direct Mount**	140°F (60°C): VA9208 Series Spring-Return Actuators
Leakage		0.01% of Maximum Flow per ANSI/FCI 70-2, Class 4
		1% of Maximum Flow
End Connections		National Pipe Thread (NPT)
Materials	**Body**	Forged Brass
	Ball	300 Series Stainless Steel
	Blowout-Proof Stem	300 Series Stainless Steel
	Seats	Graphite-Reinforced PTFE with Ethylene Propylene Diene Monomer (EPDM) O-Ring Backing
	Stem Seals	EPDM Double O-Rings
	Characterizing Disk	Amodel® AS-1145HS Polyphthalamide Resin
Compliance CRN		0C16910.5C

1. Proper water treatment is recommended; refer to the VDI 2035 Guideline.
2. Rangeability is defined as the ratio of maximum controllable flow to minimum controllable flow.
3. In steam applications, install the valve with the stem horizontal to the piping and wrap the valve and piping with insulation.

The performance specifications are nominal and conform to acceptable industry standards. For applications at conditions beyond these specifications, consult the local Johnson Controls office. Johnson Controls, Inc. shall not be liable for damages resulting from misapplication or misuse of its products. © 2015 Johnson Controls, Inc.

Code No. LIT-1922175
Issued November 13, 2015

Y63, Y64, Y65, Y66, and Y69 Series Transformers

Description

The Y63, Y64, Y65, Y66, and Y69 Series Transformers provide 24 VAC power for loads of 40 VA through 300 VA. These transformers are designed for use on digital controllers, gas controls, ignition systems, motor actuators, staging controls, and most other 24 VAC HVAC/R control systems.

The Y6x Series meets the requirements of UL 1585, UL 506, and CSA C22.2 No. 66, providing compliance in both the United States and Canada. The Y63, Y64, Y65, and Y66 transformers are listed as Class 2 transformers (UL 1585, CSA C22.2 No. 66). The Y69 is listed as a general purpose transformer (UL 506, CSA C22.2 No. 66).

Refer to the *Series Y63, Y64, Y65, Y66, and Y69 Transformers Product Bulletin (LIT-125755)* for important product application information.

RADIATORS: E-WF-1, WF-1

Features

- split-bobbin design provides best primary/secondary isolation
- multi-tap primaries reduce stocking requirements and offer application flexibility
- choice of foot, plate, or conduit hub mounting provides mounting flexibility
- choice of primary voltages meets a wide range of power requirements from 24 VAC through 480 VAC
- color-coded lead wires provide simplicity and standardization
- cULus listed or cURus recognized meets US and Canadian requirements for Class 2 transformers (Y63, Y64, Y65, and Y66) and general purpose transformers (Y69)
- built-in, easy-reset circuit breakers eliminate replacement time and cost caused by burn-out (Y63, Y64, Y66, and Y69)
- open frame Y65 models serve as ideal models when end bells are not required

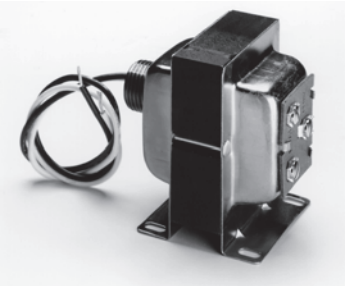

Y65 Series Transformer

Repair Information

Do not make any field repairs to transformers. For a replacement transformer, contact the nearest Johnson Controls® distributor or sales representative.

Selection Chart

Y63, Y64, Y65, Y66, and Y69 Series Transformers (Part 1 of 2)

Product Code Number	Primary Voltage VAC	Secondary Voltage VAC	Primary Connection	Secondary Connection	Mounting	Agency Requirement
40 VA Capacity Transformers with Energy Limiting Type Overload Protection						
Y65G13-0	24	24	External Fitting 8 in. primary leads	External Fitting 30 in. secondary leads	Foot	cULus Class 2
Y65A13-0	120	24	External Fitting 8 in. primary leads	External Fitting 30 in. secondary leads	Foot	cULus Class 2
Y65A21-0	120	24	End bell holes 8 in. primary leads	Three screw terminals (one is blind)	4 in. x 4 in. plate	cULus Class 2
Y65T31-0	120/208/240	24	External Fitting 8 in. primary leads	Three screw terminals (one is blind)	Foot 4 in. x 4 in. plate[1]	cULus Class 2
Y65T42-0	120/208/240	24	Common External Fitting 8 in. primary leads	Common External Fitting 8 in. secondary leads	Hub 4 in. x 4 in. plate[1]	cURus Class 2
Y65T54-0	120/208/240	24	8 in. primary leads	8 in. secondary leads	Foot-skeleton	cURus Class 2
Y65S13-0	208/240	24	External Fitting 8 in. primary leads	External Fittings 30 in. secondary leads	Foot	cULus Class 2
Y65F13-0	277/480	24	External Fitting 8 in. primary leads	External Fitting 30 in. secondary leads	Foot	cULus Class 2
Y65F42-0	277/480	24	Common External Fitting 8 in. primary leads	Common External Fitting 8 in. secondary leads	Hub 4 in. x 4 in. plate[1]	cURus Class 2
50 VA Capacity Transformers with Circuit Breakers						
Y63T22-0	120/208/240	24	End bell Hole 8 in. primary leads	End bell Hole 8 in. secondary leads	4 in. x 4 in. plate	cURus Class 2
Y63T31-0	120/208/240	24	External Fitting 8 in. primary leads	Three screw terminals (one is blind)	Foot 4 in. x 4 in. plate[1]	cULus Class 2
Y63F22-0	277/480	24	End bell Hole 8 in. primary leads	End bell Hole 8 in. secondary leads	4 in. x 4 in. plate	cURus Class 2

The performance specifications are nominal and conform to acceptable industry standards. For applications at conditions beyond these specifications, consult the local Johnson Controls office. Johnson Controls, Inc. shall not be liable for damages resulting from misapplication or misuse of its products. © 2015 Johnson Controls, Inc.

2-Way

Direct Lift, Pilot & Remote Operated Valves
1/4"–2" NPT

FUEL OIL TANK CONTROL VALVE



General Description:

2-Way Direct Lift, Pilot & Remote Operated valves are designed for higher flow and medium to high pressure applications. Pilot operated valves require the minimum pressure differential specified for proper valve operation.

Installation
Valves should be mounted with solenoid coil vertical and upright.

Standard Materials of Construction
Please refer to page A55

Compatible Fluids
Lubricated Air, Inert Gases, Water and Light Oil (300 SSU). Additional fluids compatible with alternate materials of construction (consult factory).

Use of non-lubricated gaseous media can affect valve life.



Electrical Characteristics:

Standard Voltages:
AC –24/60
120/60–110/50
240/60–220/50
DC –12, 24 & 120
For other voltages – consult factory

Coil Classification:
Class F standard
Class H available

Agency Approvals:
Standard valves with NEMA 4X or explosion proof solenoid enclosures are UL Listed and CSA Certified. For additional details, consult factory.

Maximum Ambient Temperature
150°F
Please refer to page A55 for details.

Applications:

- Irrigation systems
- Fire suppression equipment
- Molding equipment
- Cooling of machine tools
- Sterilizers
- Car wash
- Water treatment and purification
- Air compressors and dryers
- Floor cleaning equipment
- Hospital equipment
- Automated systems
- Food processing

Parker Hannifin Corporation
Fluid Control Division
1 800 825 8305 (1 800 Valve05)
www.parker.com/fcd

2-Way Internal Pilot Operated - Normally Closed - Brass

Port Size NPT	Orifice Size in.	Flow Factor Cv	Operating Pressure Differential (MOPD) PSI				Watt	Max. Media Temp. °F	Seal	Pressure Vessel Number	Reference	
			Min.	Air, Inert Gas	Water	Light Oil					Coil	Valve
AC TECHNICAL SPECIFICATIONS												
1/4	1/4	0.76	5	300	300	300	10	185	NBR	73212BN2MN00	7	A35
1/4	11/32	1.20	5	300	300	300	6	180	NBR	04F25C2122CAF	1	A54
1/4	7/16	2.00	3	150	150	150	10	185	NBR	7321KBN2RN00	7	A46
3/8	11/32	1.20	5	300	300	300	6	180	NBR	06F25C2122CAF	1	A54
3/8	1/2	2.40	5	300	300	300	10	185	NBR	73212BN3SN00	7	A32
3/8	7/16	2.50	3	150	150	150	10	185	NBR	7321KBN3SN00	7	A46
3/8	5/8	3.00	5	300	300	300	16	175	NBR	06F22C2140ADF	5	A22
3/8	1/2	3.00	1	300	235	235	11	180	NBR	06F25C2132ACF	4	A21
3/8	5/8	3.00	5	200	135	135	6	180	NBR	06F22C2140AAF	1	A23
3/8	5/8	3.00	5	150	150	150	10	185	NBR	73218BN3TN00	7	A43
3/8	5/8	3.00	0	150	150	150	11	180	NBR	06F23C2140ACF*	4	A22
3/8	5/8	3.00	0	100	100	100	10	185	NBR	72218BN3TN00*	7	A36
3/8	19/32	4.40	0	230	230	230	10	185	NBR	7221GBN3VN00*	7	A47
1/2	7/16	2.50	3	150	150	150	10	185	NBR	7321KBN4SN00	7	A46
1/2	1/2	2.80	5	300	300	300	10	185	NBR	73212BN4TN00	7	A32
1/2	1/2	3.60	1	300	235	235	11	180	NBR	08F25C2132ACF	4	A21
1/2	5/8	4.00	5	300	300	300	16	175	NBR	08F22C2140ADF	5	A22
1/2	5/8	4.00	5	250	220	220	11	180	NBR	08F22C2140ACF	4	A22
1/2	5/8	4.00	5	200	135	135	6	180	NBR	08F22C2140AAF	1	A23
1/2	5/8	4.00	5	150	150	150	10	185	NBR	73218BN4UN00	7	A43
1/2	5/8	4.00	0	150	150	150	11	180	NBR	08F23C2140ACF*	4	A22
1/2	5/8	4.00	0	100	100	100	10	185	NBR	72218BN4UN00*	7	A36
1/2	19/32	4.40	0	230	230	230	10	185	NBR	7221GBN4VN00*	7	A47
3/4	3/4	5.00	5	150	150	150	10	185	NBR	73218BN5VN00	7	A43
3/4	3/4	5.00	0	150	150	150	11	180	NBR	12F23C2148ACF*	4	A25
3/4	3/4	5.00	5	125	125	125	6	180	NBR	12F22C2148AAF	1	A24
3/4	3/4	5.00	0	100	100	100	10	185	NBR	72218BN5VN00*	7	A36
3/4	19/32	5.50	0	230	230	230	10	185	NBR	7221GBN51N00*	7	A47
3/4	3/4	6.50	5	250	150	250	6	180	NBR	12F24C2148AAF	1	A27
3/4	3/4	7.30	5	300	300	300	10	185	NBR	73212BN52N00	7	A33
3/4	3/4	7.40	1	300	235	235	11	180	NBR	12F25C2148ACF	4	A28
3/4	25/32	9.60	5	230	230	230	10	185	NBR	7321GBN53N00	7	A48

***Direct Lift Valves (0 minimum pressure differential) will open at zero differential pressure, however, full flow through the valve will be achieved at approximately 5 psi differential.**

Parker Hannifin Corporation
Fluid Control Division
1 800 825 8305 (1 800 Valve05)
www.parker.com/fcd

2-Way Internal Pilot Operated - Normally Closed - Brass (Continued)

Port Size NPT	Orifice Size in.	Flow Factor Cv	Operating Pressure Differential (MOPD) PSI				Watt	Max. Media Temp. °F	Seal	Pressure Vessel Number	Reference	
			Min.	Air, Inert Gas	Water	Light Oil					Coil	Valve
AC TECHNICAL SPECIFICATIONS												
1	19/32	5.50	0	230	230	230	10	185	NBR	7221GBN61N00*	7	A47
1	1	11.0	5	300	300	300	10	185	NBR	73212BN63N00	7	A33
1	1	11.7	0	230	230	230	10	185	NBR	7221GBN64N00*	7	A47
1	1	12.2	1	300	300	-	11	180	NBR	16F25C2164ACF	4	A30
1	1	12.5	5	230	230	230	10	185	NBR	7321GBN64N00	7	A48
1	1	13.0	5	150	150	100	6	180	NBR	16F24C2164AAF	1	A29
1	1 1/16	13.5	5	125	125	125	10	185	NBR	73218BN64N00	7	A44
1 1/4	1 1/8	15.0	5	150	150	100	6	180	NBR	20F24C2172AAF	1	A29
1 1/4	1 1/8	15.0	5	125	125	125	10	185	NBR	73218BN75N00	7	A44
1 1/4	1 1/8	19.3	5	230	230	230	10	185	NBR	7321GBN76N00	7	A48
1 1/4	1 9/16	29.0	5	230	230	230	10	185	NBR	7321GBN88N00	7	A48
1 1/2	1 1/4	22.5	5	150	150	100	6	180	NBR	24F24C2180AAF	1	A31
1 1/2	1 1/4	22.5	5	125	125	125	10	185	NBR	73218BN87N00	7	A42
2	1 9/16	38.6	5	230	230	230	10	185	NBR	7321GBN99N00	7	A48

***Direct Lift Valves (0 minimum pressure differential) will open at zero differential pressure, however, full flow through the valve will be achieved at approximately 5 psi differential.**

2-Way Internal Pilot Operated - Normally Closed - Brass (Continued)

Port Size NPT	Orifice Size in.	Flow Factor Cv	Operating Pressure Differential (MOPD) PSI				Watt	Max. Media Temp. °F	Seal	Pressure Vessel Number	Reference	
			Min.	Air, Inert Gas	Water	Light Oil					Coil	Valve
DC TECHNICAL SPECIFICATIONS												
1/4	1/4	0.76	5	300	300	300	10	185	NBR	73212BN2MN00	7	A35
1/4	11/32	1.20	5	275	275	275	11.5	150	NBR	04F25C2122C3F	6	A54
1/4	7/16	2.00	3	150	150	150	22	185	NBR	7321KBN2RN00	8	A46
1/4	7/16	2.00	3	60	60	60	10	185	NBR	7321KBN2RN00	7	A46
3/8	11/32	1.20	5	275	275	275	11.5	150	NBR	06F25C2122C3F	6	A54
3/8	1/2	2.40	5	300	300	300	10	185	NBR	73212BN3SN00	7	A32
3/8	7/16	2.50	3	150	150	150	22	185	NBR	7321KBN3SN00	8	A46
3/8	7/16	2.50	3	60	60	60	10	185	NBR	7321KBN3SN00	7	A46
3/8	5/8	3.00	5	150	150	150	10	185	NBR	73218BN3TN00	7	A43
3/8	1/2	3.00	1	130	130	130	11.5	150	NBR	06F25C2132A3F	6	A21
3/8	5/8	3.00	5	125	100	100	11.5	150	NBR	06F22C2140A3F	6	A22
3/8	5/8	3.00	0	40	40	40	22	185	NBR	72218BN3TN00*	8	A36
3/8	5/8	3.00	0	40	40	-	11.5	150	NBR	06F23C2140A3F*	6	A22
3/8	19/32	4.40	0	100	100	100	22	185	NBR	7221GBN3VN00*	8	A47
1/2	7/16	2.50	3	150	150	150	22	185	NBR	7321KBN4SN00	8	A46
1/2	7/16	2.50	3	60	60	60	10	185	NBR	7321KBN4SN00	7	A46
1/2	1/2	2.80	5	300	300	300	10	185	NBR	73212BN4TN00	7	A32
1/2	1/2	3.60	1	130	130	130	11.5	150	NBR	08F25C2132A3F	6	A21
1/2	5/8	4.00	5	150	150	150	10	185	NBR	73218BN4UN00	7	A43
1/2	5/8	4.00	5	125	100	100	11.5	150	NBR	08F22C2140A3F	6	A22
1/2	5/8	4.00	0	40	40	40	22	185	NBR	72218BN4UN00*	8	A36
1/2	5/8	4.00	0	40	40	-	11.5	150	NBR	08F23C2140A3F*	6	A22
1/2	19/32	4.40	0	100	100	100	22	185	NBR	7221GBN4VN00*	8	A47
3/4	3/4	5.00	5	150	150	150	10	185	NBR	73218BN5VN00	7	A43
3/4	3/4	5.00	5	100	90	75	11.5	180	NBR	12F22C2148A3F	6	A25
3/4	3/4	5.00	0	40	40	40	22	185	NBR	72218BN5VN00*	8	A36
3/4	3/4	5.00	0	40	40	-	11.5	150	NBR	12F23C2148A3F*	6	A25
3/4	19/32	5.50	0	100	100	100	22	185	NBR	7221GBN51N00*	8	A47
3/4	3/4	6.50	5	125	125	125	11.5	150	NBR	12F24C2148A3F	6	A26
3/4	3/4	7.30	5	300	300	300	10	185	NBR	73212BN52N00	7	A33
3/4	25/32	9.60	5	230	230	230	10	185	NBR	7321GBN53N00	7	A48

***Direct Lift Valves (0 minimum pressure differential) will open at zero differential pressure, however, full flow through the valve will be achieved at approximately 5 psi differential.**

Parker Hannifin Corporation
Fluid Control Division
1 800 825 8305 (1 800 Valve05)
www.parker.com/fcd

2-Way Internal Pilot Operated - Normally Closed - Brass (Continued)

Port Size NPT	Orifice Size in.	Flow Factor Cv	Operating Pressure Differential (MOPD) PSI				Watt	Max. Media Temp. °F	Seal	Pressure Vessel Number	Reference	
			Min.	Air, Inert Gas	Water	Light Oil					Coil	Valve
DC TECHNICAL SPECIFICATIONS												
1	19/32	5.50	0	100	100	100	22	185	NBR	7221GBN61N00*	8	A47
1	1	11.0	5	300	300	300	10	185	NBR	73212BN63N00	7	A33
1	1	11.7	0	85	85	85	22	185	NBR	7221GBN64N00*	8	A47
1	1	12.2	1	275	275	275	11.5	180	NBR	16F25C2164A3F	6	A30
1	1	12.5	5	230	230	230	10	185	NBR	7321GBN64N00	7	A48
1	1	13.0	5	125	125	125	11.5	150	NBR	16F24C2164A3F	6	A29
1	1 1/16	13.5	5	125	125	125	10	185	NBR	73218BN64N00	7	A44
1 1/4	1 1/8	19.3	5	230	230	230	10	185	NBR	7321GBN76N00	7	A48
1 1/4	1 1/8	15.0	5	125	125	125	11.5	150	NBR	20F24C2172A3F	6	A29
1 1/4	1 1/8	15.0	5	125	125	125	10	185	NBR	73218BN75N00	7	A44
1 1/2	1 1/4	22.5	5	125	125	125	11.5	150	NBR	24F24C2180A3F	6	A31
1 1/2	1 1/4	22.5	5	125	125	125	10	185	NBR	73218BN87N00	7	A42
1 1/2	1 9/16	29.0	5	230	230	230	22	185	NBR	7321GBN88N00	8	A48
1 1/2	1 9/16	29.0	5	200	200	200	10	185	NBR	7321GBN88N00	7	A48
2	1 9/16	38.6	5	230	230	230	22	185	NBR	7321GBN99N00	8	A48
2	1 9/16	38.6	5	200	200	200	10	185	NBR	7321GBN99N00	7	A48

***Direct Lift Valves (0 minimum pressure differential) will open at zero differential pressure, however, full flow through the valve will be achieved at approximately 5 psi differential.**

2-Way Internal Pilot Operated - Normally Closed - Stainless Steel

Port Size NPT	Orifice Size in.	Flow Factor Cv	Operating Pressure Differential (MOPD) PSI				Watt	Max. Media Temp. °F	Seal	Pressure Vessel Number	Reference	
			Min.	Air, Inert Gas	Water	Light Oil					Coil	Valve
AC TECHNICAL SPECIFICATIONS												
1/4	1/4	0.76	5	300	300	300	10	185	NBR	73212SN2MN00	7	A38
3/8	5/8	3.00	5	300	300	300	16	175	NBR	06F22C6140ADF	5	A22
3/8	5/8	3.00	0	150	150	150	11	180	NBR	06F23C6140ACF*	4	A22
3/8	5/8	3.00	0	100	100	100	10	185	FKM	72218RN3TV00*	7	A36
1/2	1/2	4.00	5	300	300	300	16	175	NBR	08F22C6140ADF	5	A22
1/2	1/2	4.00	0	150	150	150	11	180	NBR	08F23C6140ACF*	4	A22
1/2	5/8	4.00	0	100	100	100	10	185	FKM	72218RN4UV00*	7	A36
3/4	3/4	5.00	5	300	300	300	16	175	NBR	12F22C6148ADF	5	A25
3/4	3/4	5.00	0	150	150	150	11	180	NBR	12F23C6148ACF*	4	A25
3/4	3/4	5.00	0	100	100	100	10	185	FKM	72218RN5VV00*	7	A36
1	1	13.00	5	150	150	100	6	180	NBR	16F24C6164AAF	1	A29
1 1/2	1 1/4	22.50	5	150	150	100	6	180	NBR	24F24C6180AAF	1	A31
DC TECHNICAL SPECIFICATIONS												
1/4	1/4	0.76	5	300	300	300	10	185	NBR	73212SN2MN00	7	A38
3/8	5/8	3.00	5	125	100	100	11.5	150	NBR	06F22C6140A3F	6	A22
3/8	5/8	3.00	0	40	40	40	22	185	FKM	72218RN3TV00*	8	A36
3/8	5/8	3.00	0	40	40	-	11.5	150	NBR	06F23C6140A3F*	6	A22
1/2	1/2	4.00	5	125	100	100	11.5	150	NBR	08F22C6140A3F	6	A22
1/2	5/8	4.00	0	40	40	40	22	185	FKM	72218RN4UV00*	8	A36
1/2	1/2	4.00	0	40	40	-	11.5	150	NBR	08F23C6140A3F*	6	A22
3/4	3/4	5.00	5	100	90	75	11.5	150	NBR	12F22C6148A3F	6	A25
3/4	3/4	5.00	0	40	40	40	22	185	FKM	72218RN5VV00*	8	A36
3/4	3/4	5.00	0	40	40	-	11.5	150	NBR	12F23C6148A3F*	6	A25
1	1	13.00	5	125	125	125	11.5	150	NBR	16F24C6164A3F	6	A29
1 1/2	1 1/4	22.50	5	125	125	125	11.5	150	NBR	24F24C6180A3F	6	A31

***Direct Lift Valves (0 minimum pressure differential) will open at zero differential pressure, however, full flow through the valve will be achieved at approximately 5 psi differential.**

Parker Hannifin Corporation
Fluid Control Division
1 800 825 8305 (1 800 Valve05)
www.parker.com/fcd

2-Way Internal Pilot Operated - Normally Open - Brass

Port Size NPT	Orifice Size in.	Flow Factor Cv	Operating Pressure Differential (MOPD) PSI				Watt	Max. Media Temp. °F	Seal	Pressure Vessel Number	Reference	
			Min.	Air, Inert Gas	Water	Light Oil					Coil	Valve
AC TECHNICAL SPECIFICATIONS												
1/4	1/4	0.76	5	200	200	200	10	185	NBR	73222BN2MN00	7	A35
1/4	11/32	1.20	5	300	300	300	11	180	NBR	04F25O2122CCF	4	A54
3/8	1/2	2.40	5	200	200	200	10	185	NBR	73222BN3SN00	7	A49
3/8	1/2	3.00	1	200	175	175	11	180	NBR	06F25O2132ACF	4	A21
3/8	5/8	3.00	0	150	150	150	11	150	NBR	06F23O2140ACF*	4	A51
3/8	5/8	3.00	5	150	150	150	10	185	NBR	73228BN3TN00	7	A40
3/8	5/8	3.00	0	125	125	125	22	185	FKM	72228BN3TV00*	8	A37
1/2	1/2	2.80	5	200	200	200	10	185	NBR	73222BN4TN00	7	A49
1/2	1/2	3.60	1	200	175	175	11	180	NBR	08F25O2132ACF	4	A21
1/2	5/8	4.00	5	150	150	150	10	185	NBR	73228BN4UN00	7	A40
1/2	5/8	4.00	0	150	150	150	11	150	NBR	08F23O2140ACF*	4	A51
1/2	1/2	4.00	0	125	125	125	22	185	FKM	72228BN4UV00*	8	A37
3/4	3/4	5.00	5	150	150	150	10	185	NBR	73228BN5VN00	7	A40
3/4	3/4	5.00	0	125	125	125	22	185	FKM	72228BN5VV00*	8	A37
3/4	3/4	5.50	0	150	150	150	11	180	NBR	12F23O2148ACF*	4	A52
3/4	3/4	6.50	5	250	200	200	11	180	NBR	12F24O2148ACF	4	A26
3/4	3/4	7.30	5	200	200	200	10	185	NBR	73222BN52N00	7	A50
3/4	3/4	7.40	1	275	275	275	11	180	NBR	12F25O2148ACF	4	A28
3/4	25/32	9.60	5	230	230	230	10	185	NBR	7322GBN53N00	7	A48
1	1	11.00	5	200	200	200	10	185	NBR	73222BN63N00	7	A50
1	1	12.20	1	300	250	230	11	180	NBR	16F25O2164ACF	4	A30
1	1	12.50	5	230	230	230	10	185	NBR	7322GBN64N00	7	A48
1	1	13.00	5	125	125	125	11	180	NBR	16F24O2164ACF	4	A29
1	1 1/16	13.50	5	125	125	125	10	185	NBR	73228BN64N00	7	A41
1 1/4	1 1/8	15.00	5	125	125	125	11	180	NBR	20F24O2172ACF	4	A29
1 1/4	1 1/8	15.00	5	125	125	125	10	185	NBR	73228BN75N00	7	A41
1 1/4	1 1/8	19.30	5	230	230	230	10	185	NBR	7322GBN76N00	7	A48
1 1/2	1.25	22.50	5	125	125	125	11	180	NBR	24F24O2180ACF	4	A31
1 1/2	1.25	22.50	5	125	125	125	10	185	NBR	73228BN87N00	7	A42
1 1/2	1 9/16	29.00	5	170	170	170	10	185	NBR	7322GBN88N00	7	A48
2	1 9/16	38.60	5	170	170	170	10	185	NBR	7322GBN99N00	7	A48

***See note on A32.**

2-Way Internal Pilot Operated - Normally Open - Brass (Continued)

Port Size NPT	Orifice Size in.	Flow Factor Cv	Operating Pressure Differential (MOPD) PSI				Watt	Max. Media Temp. °F	Seal	Pressure Vessel Number	Reference	
			Min.	Air, Inert Gas	Water	Light Oil					Coil	Valve
DC TECHNICAL SPECIFICATIONS												
1/4	1/4	0.76	5	200	200	200	10	185	NBR	73222BN2MN00	7	A35
1/4	11/32	1.20	5	160	160	160	11.5	150	NBR	04F25O2122C3F	6	A54
3/8	1/2	2.40	5	200	200	200	10	185	NBR	73222BN3SN00	7	A49
3/8	5/8	3.00	5	150	150	150	10	185	NBR	73228BN3TN00	7	A40
3/8	5/8	3.00	0	125	125	80	11.5	150	NBR	06F23O2140A3F*	6	A51
3/8	5/8	3.00	0	125	125	125	22	185	FKM	72228BN3TV00*	8	A37
1/2	1/2	2.80	5	200	200	200	10	185	NBR	73222BN4TN00	7	A49
1/2	5/8	4.00	5	150	150	150	10	185	NBR	73228BN4UN00	7	A40
1/2	1/2	4.00	0	125	125	125	22	185	FKM	72228BN4UV00*	8	A37
1/2	5/8	4.00	0	125	125	80	11.5	150	NBR	08F23O2140A3F*	6	A51
1/2	1/2	12.70	5	200	175	175	11.5	180	NBR	08F25O2132C3F	6	A21
3/4	3/4	5.00	5	150	150	150	10	185	NBR	73228BN5VN00	7	A40
3/4	3/4	5.00	0	125	125	125	22	185	FKM	72228BN5VV00*	8	A37
3/4	3/4	5.50	0	125	125	80	11.5	150	NBR	12F23O2148A3F*	6	A52
3/4	3/4	7.30	5	200	200	200	10	185	NBR	73222BN52N00	7	A50
3/4	25/32	9.60	5	230	230	230	10	185	NBR	7322GBN53N00	7	A48
1	1	11.00	5	200	200	200	10	185	NBR	73222BN63N00	7	A50
1	1	12.50	5	230	230	230	10	185	NBR	7322GBN64N00	7	A48
1	1	13.00	5	125	125	125	11.5	180	NBR	16F24O2164A3F	6	A29
1	1 1/16	13.50	5	125	125	125	10	185	NBR	73228BN64N00	7	A41
1 1/4	1 1/8	15.00	5	125	125	125	10	185	NBR	73228BN75N00	7	A41
1 1/4	1 1/8	19.30	5	230	230	230	10	185	NBR	7322GBN76N00	7	A48
1 1/2	1 1/4	22.50	5	125	125	125	11.5	180	NBR	24F24O2180A3F	6	A31
1 1/2	1 1/4	22.50	5	125	125	125	10	185	NBR	73228BN87N00	7	A42
1 1/2	1 9/16	29.00	5	170	170	170	10	185	NBR	7322GBN88N00	7	A48
2	1 9/16	38.60	5	170	170	170	10	185	NBR	7322GBN99N00	7	A48

***Direct Lift Valves (0 minimum pressure differential) will open at zero differential pressure, however, full flow through the valve will be achieved at approximately 5 psi differential.**

Parker Hannifin Corporation
Fluid Control Division
1 800 825 8305 (1 800 Valve05)
www.parker.com/fcd

2-Way Internal Pilot Operated - Normally Open - Stainless Steel

Port Size NPT	Orifice Size in.	Flow Factor Cv	Operating Pressure Differential (MOPD) PSI				Watt	Max. Media Temp. °F	Seal	Pressure Vessel Number	Reference	
			Min.	Air, Inert Gas	Water	Light Oil					Coil	Valve
AC TECHNICAL SPECIFICATIONS												
1/4	1/4	0.76	5	200	200	200	10	185	NBR	73222SN2MN00	7	A39
3/8	5/8	3.00	0	150	150	150	11	175	NBR	06F23O6140ACF*	4	A51
3/8	5/8	3.00	0	125	125	125	22	185	FKM	72228RN3TV00*	8	A37
1/2	1/2	4.00	0	150	150	150	11	175	NBR	08F23O6140ACF*	4	A51
1/2	1/2	4.00	0	125	125	125	22	185	FKM	72228RN4UV00*	8	A37
3/4	3/4	5.00	0	150	150	150	11	175	NBR	12F23O6148ACF*	4	A52
3/4	3/4	5.00	0	125	125	125	22	185	FKM	72228RN5VV00*	8	A37
1	1	13.00	5	125	125	125	11	180	NBR	16F24O6164ACF	4	A29
1 1/2	1 1/4	22.50	5	125	125	125	11	180	NBR	24F24O6180ACF		A31
DC TECHNICAL SPECIFICATIONS												
1/4	1/4	0.76	5	200	200	200	10	185	NBR	73222SN2MN00	7	A39
3/8	5/8	3.00	0	125	125	125	22	185	FKM	72228RN3TV00*	8	A37
3/8	5/8	3.00	0	125	125	80	11.5	150	NBR	06F23O6140A3F*	6	A51
1/2	1/2	4.00	0	125	125	125	22	185	FKM	72228RN4UV00*	8	A37
1/2	1/2	4.00	0	125	125	80	11.5	150	NBR	08F23O6140A3F*	6	A51
3/4	3/4	5.00	0	125	125	125	22	185	FKM	72228RN5VV00*	8	A37
3/4	3/4	5.00	0	125	125	80	11.5	150	NBR	12F23O6148A3F*	6	A52
1	1	13.00	5	125	125	125	11.5	150	NBR	16F24O6164A3F	6	A29
1 1/2	1 1/4	22.50	5	125	125	125	11.5	150	NBR	24F24O6180A3F	6	A31

***Direct Lift Valves (0 minimum pressure differential) will open at zero differential pressure, however, full flow through the valve will be achieved at approximately 5 psi differential.**

2-Way External Pilot Operated* - Universal - Brass

Port Size NPT	Orifice Size in.	Flow Factor Cv	Operating Pressure Differential (MOPD) PSI				Watt	Max. Media Temp. °F	Seal	Pressure Vessel Number	Reference	
			Min.	Air, Inert Gas	Water	Light Oil					Coil	Valve
AC TECHNICAL SPECIFICATIONS												
3/8	1/2	2.40	0	150	150	150	10	185	NBR	74232BN3SNJ1	7	A45
1/2	1/2	2.80	0	150	150	150	10	185	NBR	74232BN4TNJ1	7	A45
3/4	3/4	7.30	0	150	150	150	10	185	NBR	74232BN52NJ1	7	A34
1	1	11.00	0	150	150	150	10	185	NBR	74232BN63NJ1	7	A34
DC TECHNICAL SPECIFICATIONS												
3/8	1/2	2.40	0	150	150	150	10	185	NBR	74232BN3SNJ1	7	A45
1/2	1/2	2.80	0	150	150	150	10	185	NBR	74232BN4TNJ1	7	A45
3/4	3/4	7.30	0	150	150	150	10	185	NBR	74232BN52NJ1	7	A34
1	1	11.00	0	150	150	150	10	185	NBR	74232BN63NJ1	7	A34

***External pilot pressure valves require a minimum external pilot pressure equal to the main line pressure plus 10 psi. Maximum external pilot pressure is 145 psi for vacuum applications and 160 psi for pressure applications. (Pressure ratings may be reduced, however. Consult factory for details.)**

2-Way Remote Pressure Operated Valves - Universal - Brass, NBR Seals

Port Size NPT	Orifice Size in.	Flow Factor Cv	Operating Pressure Differential (MOPD) PSI				Watt	Max. Media Temp. °F	Seal	Pressure Vessel Number	Reference	
			Min.	Air, Inert Gas	Water	Light Oil					Coil	Valve
3/8	1/2	2.4	0	190	190	190	--	185		75232BN3SN00	-	A55
1/2	1/2	2.8	0	190	190	190	--	185		75232BN4TN00	-	A55
3/4	3/4	7.3	0	190	190	190	--	185		75232BN52N00	-	A55

2-Way Remote Operated Valve Port Connections

Valve Type	Main Line Supply	Remote Control Valve Hookup			3-Way Pilot Valve Hookup		
		IN Port	OUT Port	Pilot Inlet Port 1/8" NPT	Normally Closed Port	Normally Open Port	Common Port
Normally Open	0-190 PSIG	IN	OUT	Common Port of 3-Way Pilot Valve	Main Line Pressure +10 PSI Min.	Pilot Exhaust	Pilot IN Port (1/8" NPT) of Remote Control Valve
Normally Open	Vacuum	Non-Vacuum Pump	Vacuum Pump		Main Line Pressure +10 PSI Min.	Vacuum	
Normally Closed	0-190 PSIG	IN	OUT				
Normally Closed	Vacuum	Non-Vacuum Pump	Vacuum Pump				

*** To assure long, trouble free life, the Pilot IN to main pressure differential should not exceed 200 PSIG.**
NOTE: This valve is its normal state, without piloting, is normally open.
NOTE: These vavles do not have an electrical operator, therefore, No enclosure and/or coil selection is required.

Parker Hannifin Corporation
Fluid Control Division
1 800 825 8305 (1 800 Valve05)
www.parker.com/fcd

Valve Reference A21



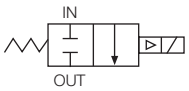

2-Way Normally Closed
06F25C, 08F25C

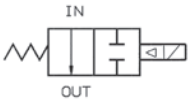

2-Way Normally Open
06F25O, 08F25O
Port Identification:
In-In/Out-Out

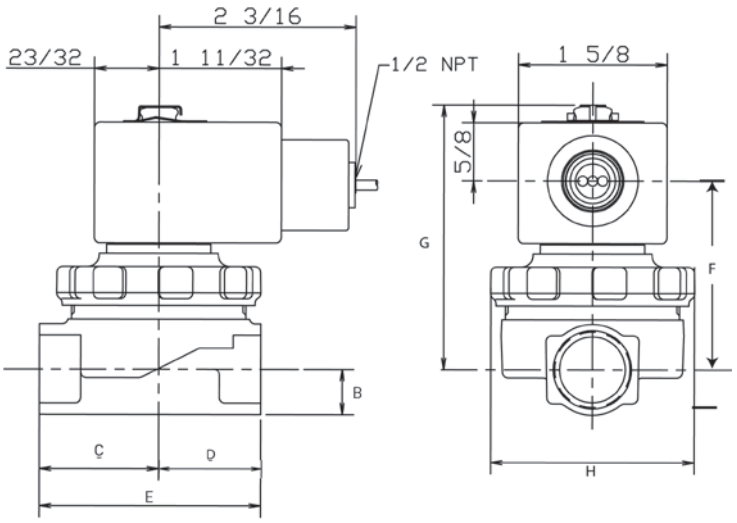

Valve	Dimensions						
	B	C	D	E	F	G	H
06F25C2132ACF 08F25C2132ACF 06F25C2132A3F 08F25C2132A3F	1/2	1 5/16	1 1/8	2 7/16	2 5/16	2 29/32	2 1/4
06F25O2132ACF 08F25O2132ACF 08F25O2132A3F	1/2	1 5/16	1 1/8	2 7/16	2 7/32	2 29/32	2 1/4

Valve Reference A22



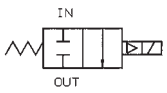

2-Way Normally Closed
Port Identification:
In-In/Out-Out

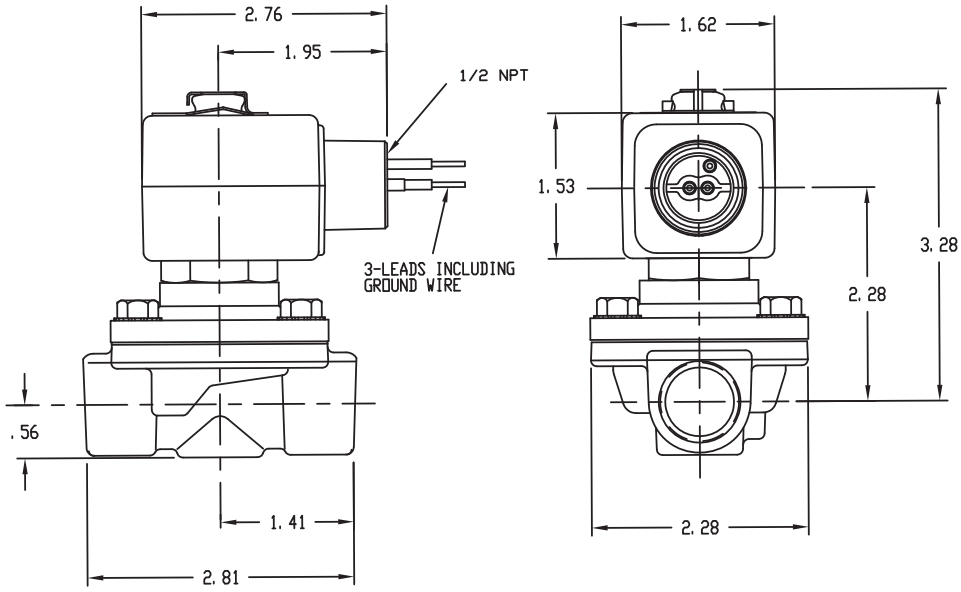

Valve Reference A23



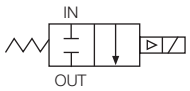

2-Way Normally Closed
Port Identification:
In-In/Out-Out

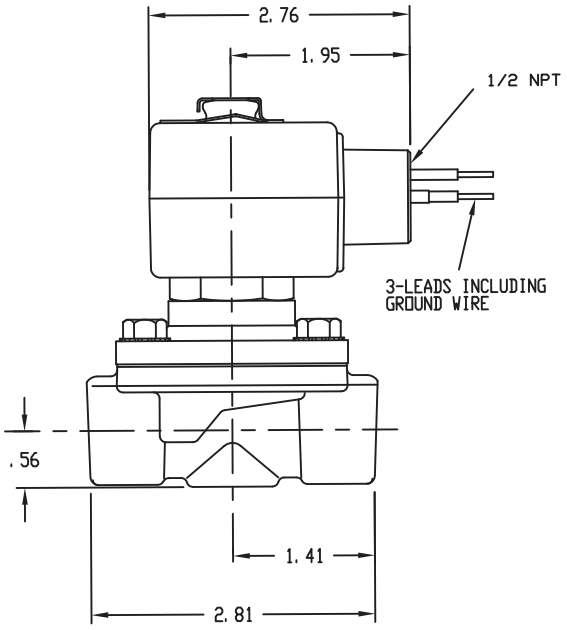

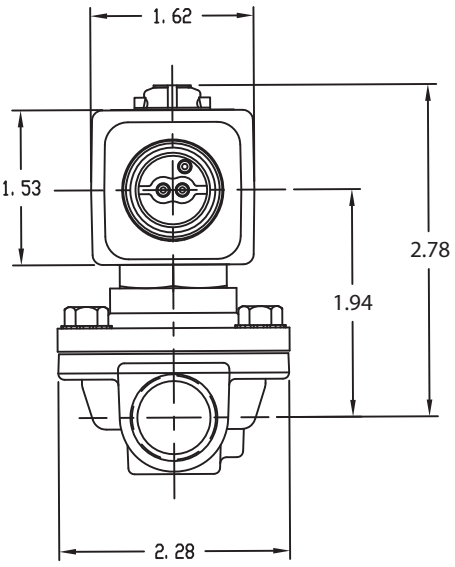

Valve Reference A24



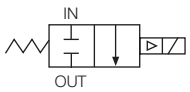

2-Way Normally Closed
Port Identification:
In-In/Out-Out

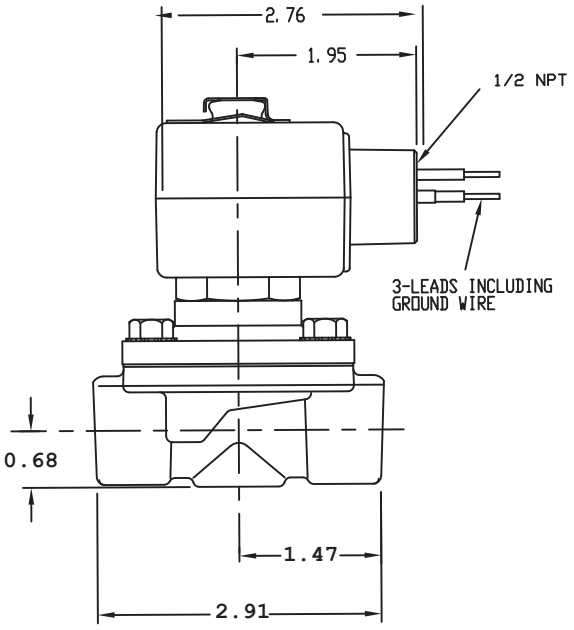

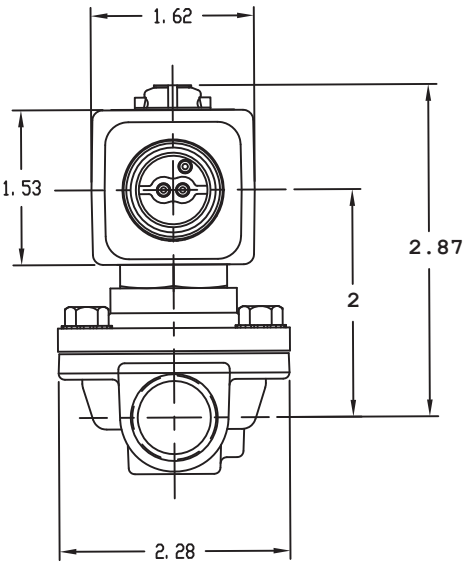

Parker Hannifin Corporation
Fluid Control Division
1 800 825 8305 (1 800 Valve05)
www.parker.com/fcd

Valve Reference A25



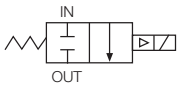

2-Way Normally Closed
Port Identification:
In-In/Out-Out

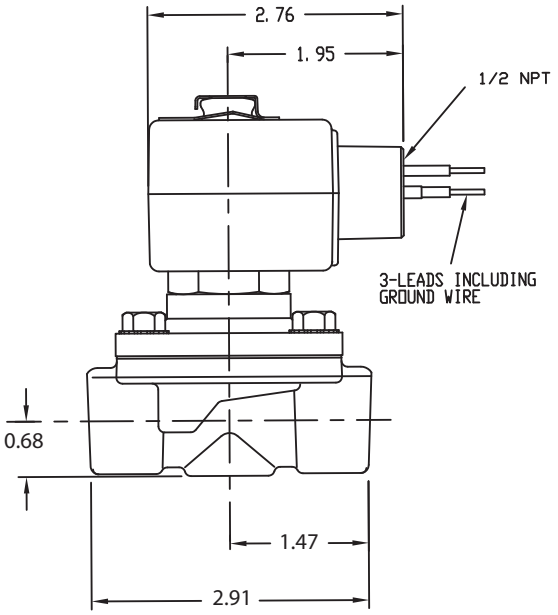

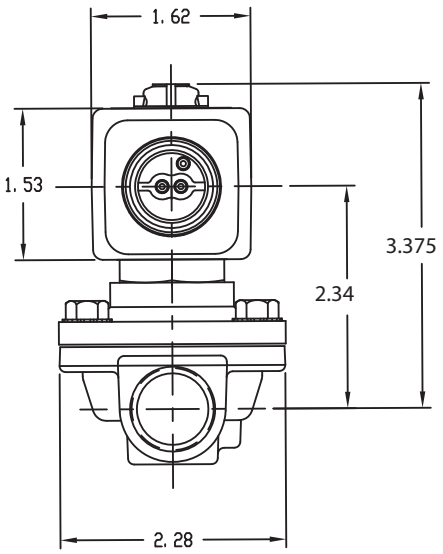

Valve Reference A26



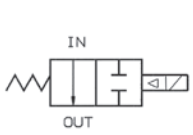

2-Way Normally Open
Port Identification:
In-In/Out-Out

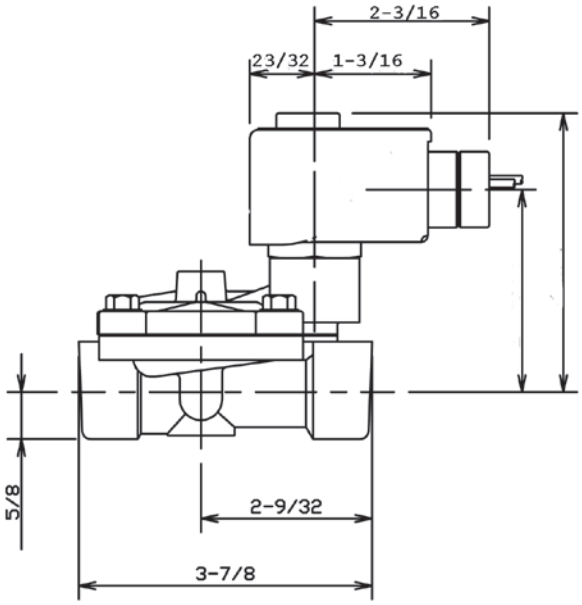

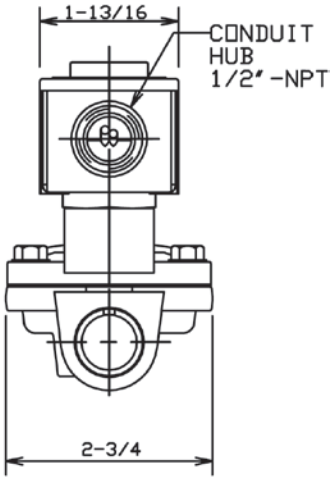

Valve Reference A27



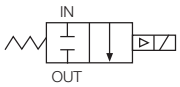

2-Way Normally Closed:
Port Identification:
In-In/Out-Out

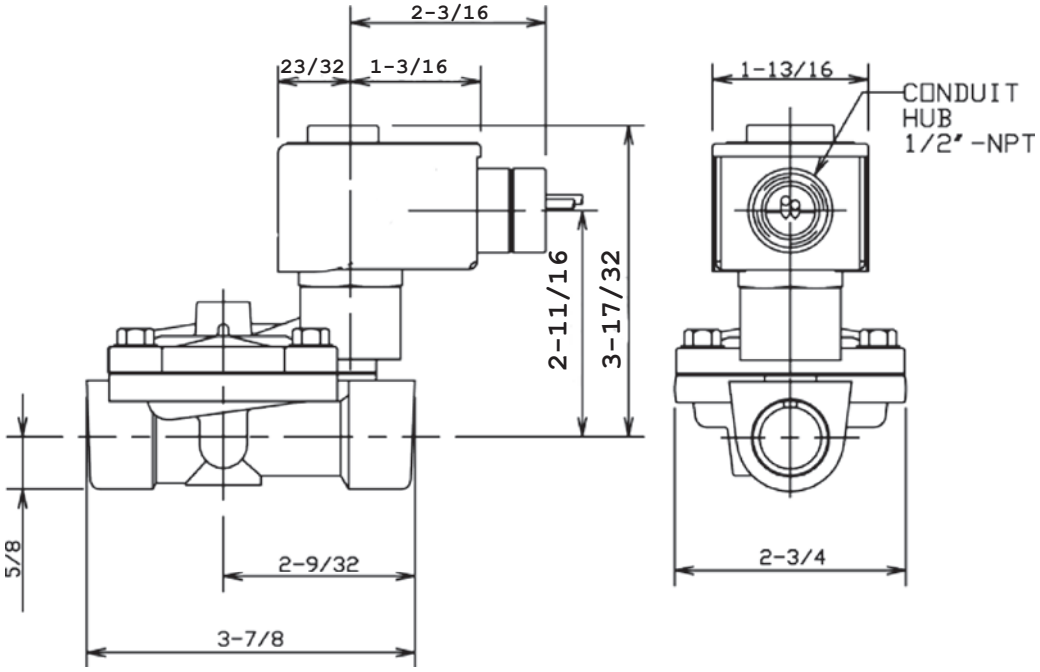

Valve Reference A28



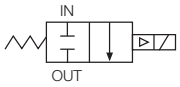

2-Way Normally Closed:
12F25Cxx

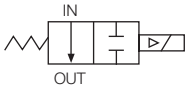

2-Way Normally Open:
12F25Oxx
Port Identification:
In-In/Out-Out

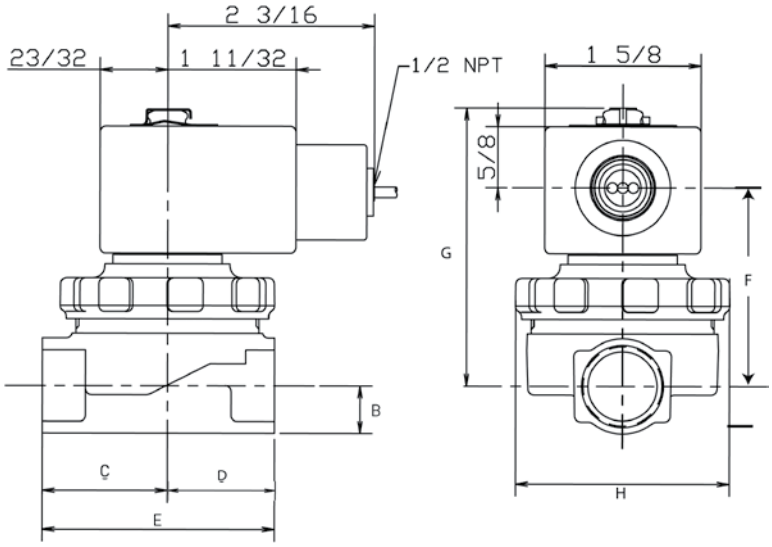

Valve	Dimensions						
	B	C	D	E	F	G	H
12F25C2148ACF	5/8	1 5/8	1 1/2	3 1/8	2 11/32	3 15/32	3 1/2
12F25O2148ACF	5/8	1 5/8	1 1/2	3 1/8	2 1/4	3 15/32	2 29/32

Parker Hannifin Corporation
Fluid Control Division
1 800 825 8305 (1 800 Valve05)
www.parker.com/fcd

Valve Reference A29



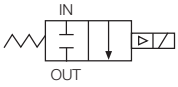

16F24Cxx
20F24Cxx

2-Way normally closed:

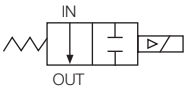

16F24Oxx
20F24Oxx

2-Way normally open:

Port Identification:
In-In/Out-Out

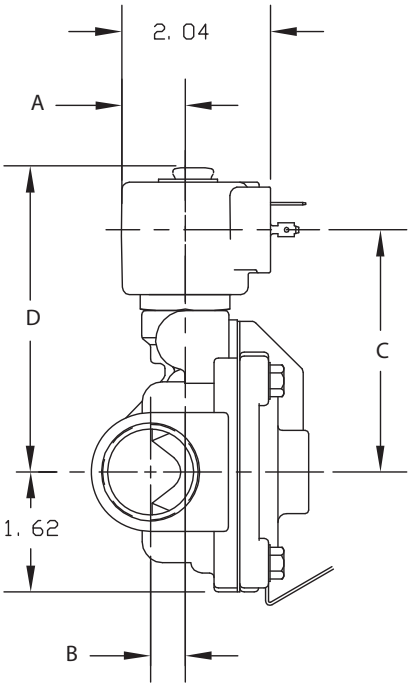

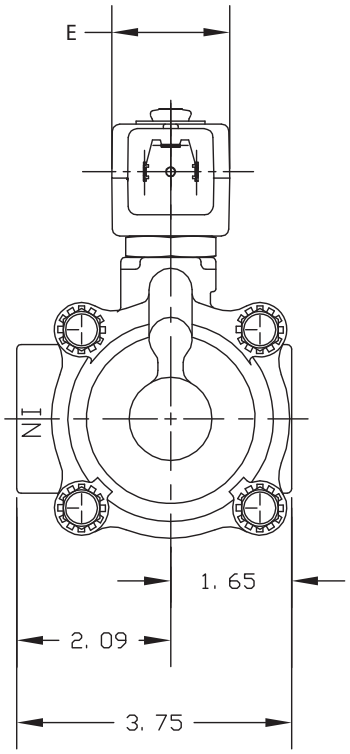

Valve	Dimensions				
	A	B	C	D	E
16F24C2164AAF 16F24C6164AAF	23/32	15/32	3 1/8	3 31/32	1 9/16
16F24C2164A3F 16F24C6164A3F	7/8	15/32	3 9/32	4 3/16	1 13/16
20F24C2172AAF	23/32	17/32	3 1/8	3 31/32	1 9/16
20F24C2172A3F	7/8	17/32	3 9/32	4 3/16	1 13/16
16F24O2164ACF 16F24O2164A3F	23/32	15/32	4 5/32	4 3/16	1 13/16
16F24O6164ACF 16F24O6164A3F					
20F24O2172ACF 20F24O2172A3F	7/8	17/32	4 3/8	4 13/16	1 13/16

Valve Reference A30



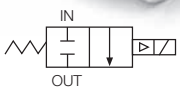

2-Way Normally Closed:
16F25Cxx

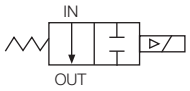

2-Way Normally Open:
16F25Oxx

Port identification:
In-In/Out-Out

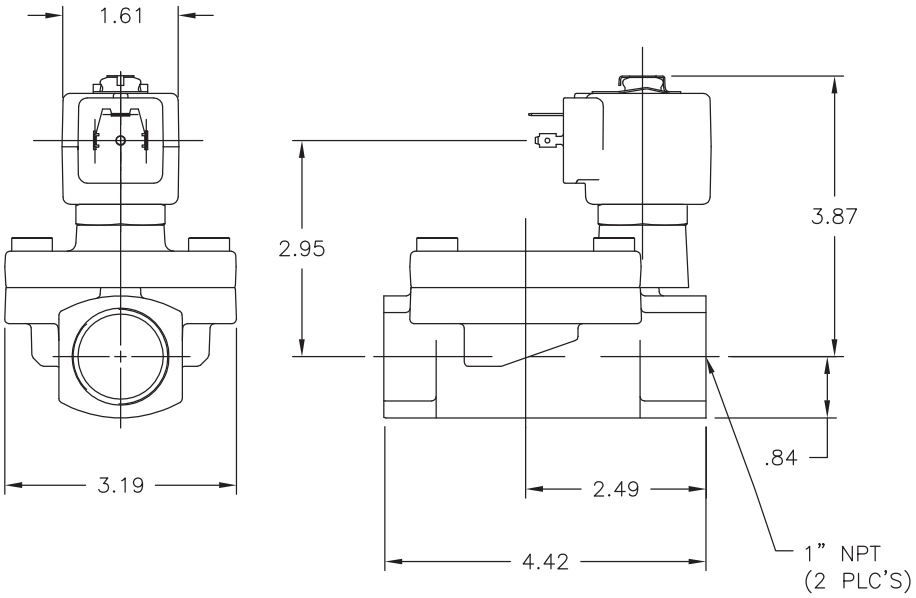

Valve Reference A31



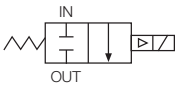

2-Way Normally Closed
Port identification:
In-In/Out-Out

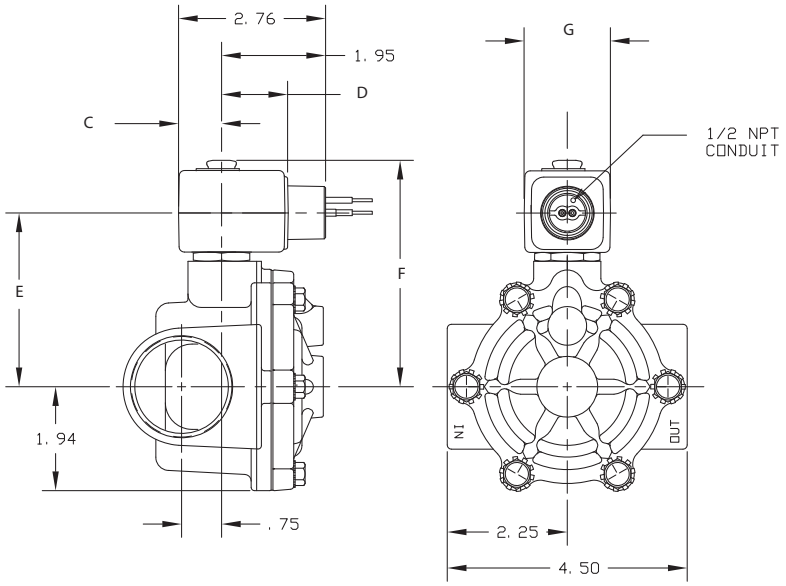

Part Number	Dimension				
	C	D	E	F	G
24F24C2180AAF 24F24C180AAF	23/32	1 5/16	3 5/16	4 5/32	1 9/16
24F24C2180A3F	7/8	1 17/32	3 17/32	4 3/8	1 13/16
24F2402180ACF 24F2402180A3F 24F2406180ACF	7/8	1 17/32	3 3/8	4 3/8	1 13/16

Parker Hannifin Corporation
Fluid Control Division
1 800 825 8305 (1 800 Valve05)
www.parker.com/fcd

Valve Reference A32



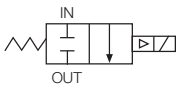

2-Way Normally Closed
Port Identification:
IN-IN/OUT-OUT

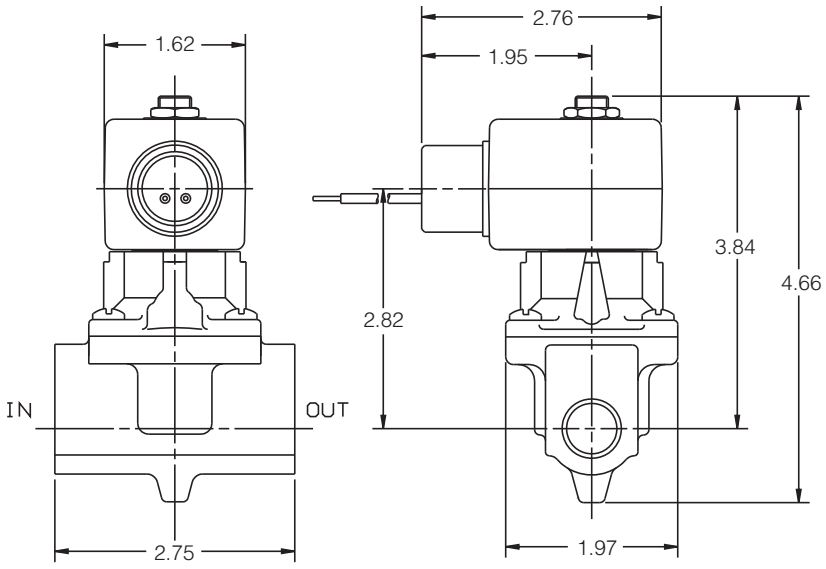

Valve Reference A33



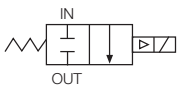

2-Way Normally Closed
Port identification:
In-In/Out-Out
73212BN52
P-IN/A-OUT
73212BN63

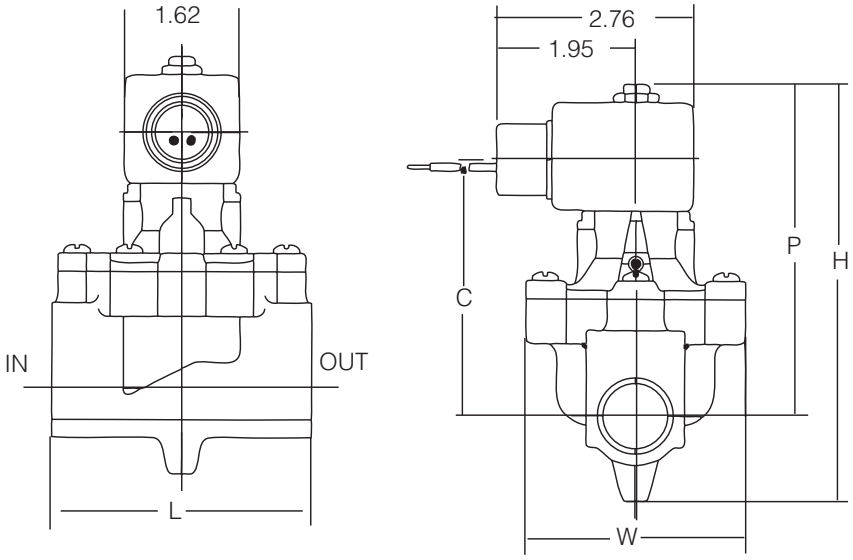

Part Number	Dimension					Port Indentification	
	H	P	C	L	W	IN	OUT
73212BN52NOO	5.81	4.62	3.59	3.62	3.09	IN	OUT
73212BN63NOO	6.22	4.89	3.87	4.31	3.45	P	A

Valve Reference A34



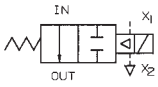

2-Way
Normally Open

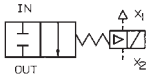

2-Way
Normally Closed

2-Way Univeral
Valve may be Normally Closed or
Normally Open, depending on piping
of external pilot.

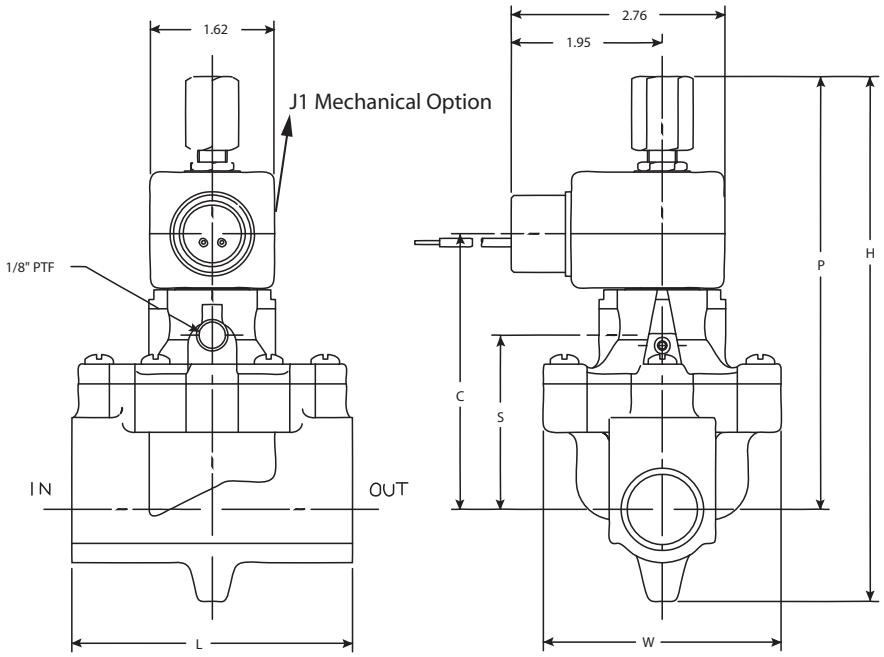

Part Number	Dimension						Port Identification	
	H	P	C	L	W	S	IN	OUT
74232BN52NJ1	6.78	5.59	3.59	3.62	3.09	2.28	IN	OUT
74232BN63NJ1	7.19	5.86	3.87	4.31	3.45	2.56	P	A

Valve Reference A35



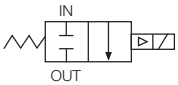

2-Way Normally Closed
73212xx

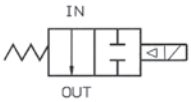

2-Way Normally Open:
73222xx

Port Identification:
IN-IN/--OUT

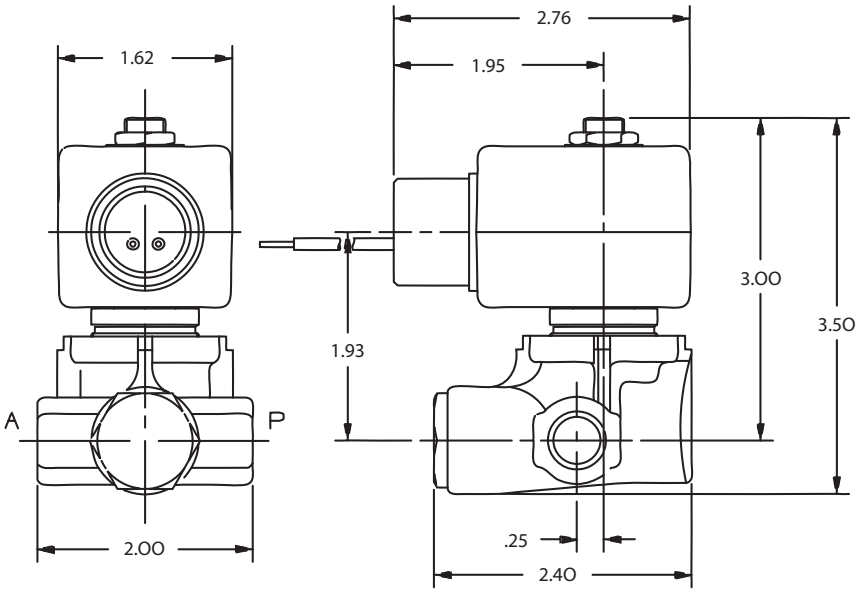

Parker Hannifin Corporation
Fluid Control Division
1 800 825 8305 (1 800 Valve05)
www.parker.com/fcd

Valve Reference A36



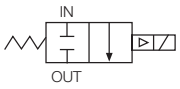

2-Way Normally Closed
Port Identification:
P-IN/--OUT

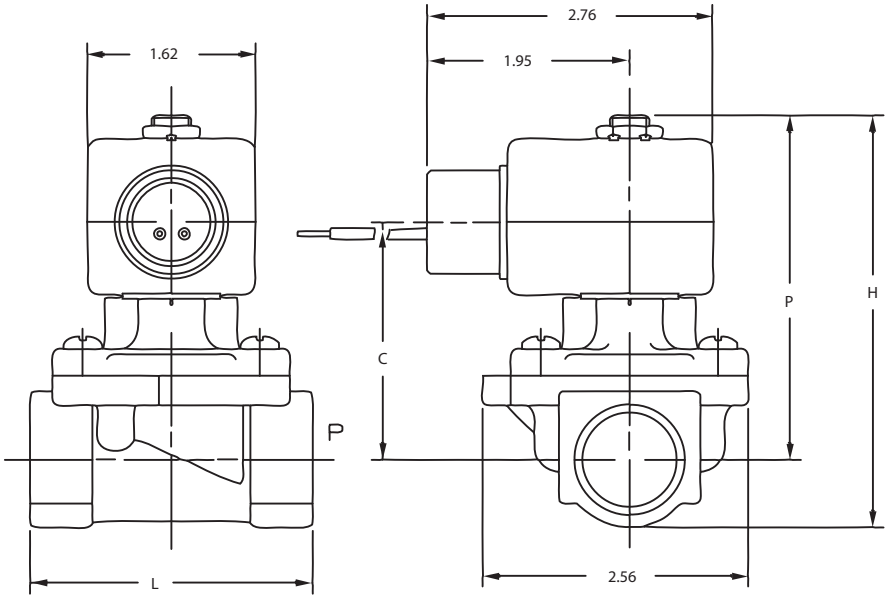

Valve	Dimensions			
	H	P	C	L
72218BN3TXXX 72218BN4UXXX	3.78	3.23	2.21	2.64
72218RN3TXXX 72218RN4UXXX 72218BN5VXXX 72218RN5VXXX	3.99	3.33	2.31	2.71

Valve Reference A37



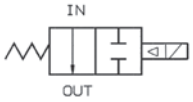

2-Way Normally Open
Port Identification:
P-IN/--OUT

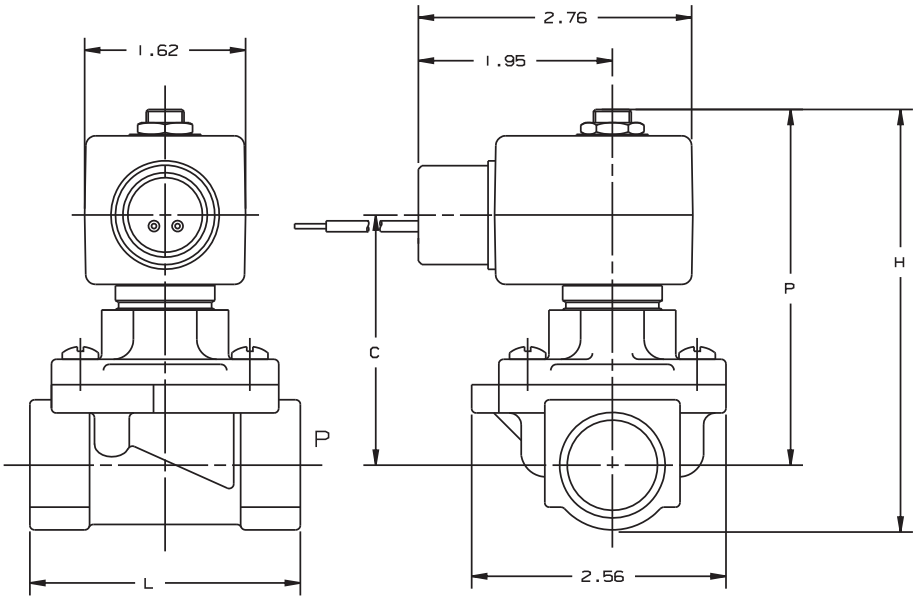

Valve	Dimensions			
	H	P	C	L
72228BN3TXXX 72228BN4UXXX 72228RN3TXXX 72228RN4UXXX	4.04	3.49	2.43	2.64
72228BN5VXXX 72228RN5VXXX	4.24	3.58	2.52	2.72

Valve Reference A38



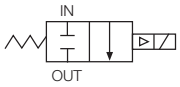

2-Way Normally Closed
Port Identification:
2-IN/1-OUT

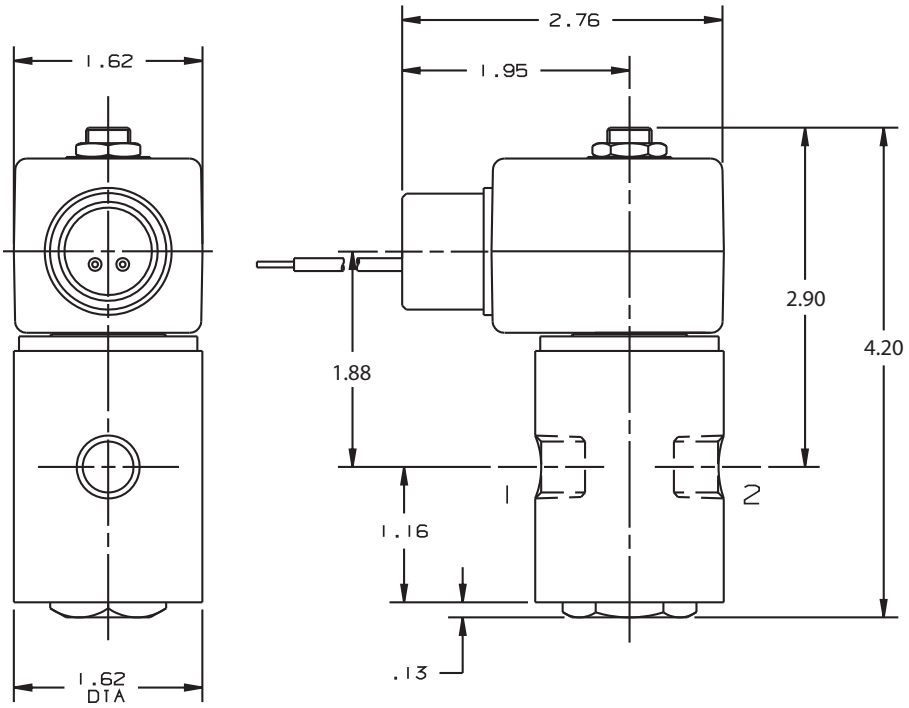

Valve Reference A39



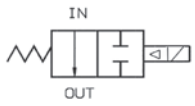

2-Way Normally Open
Port Identification:
2-IN/1-OUT

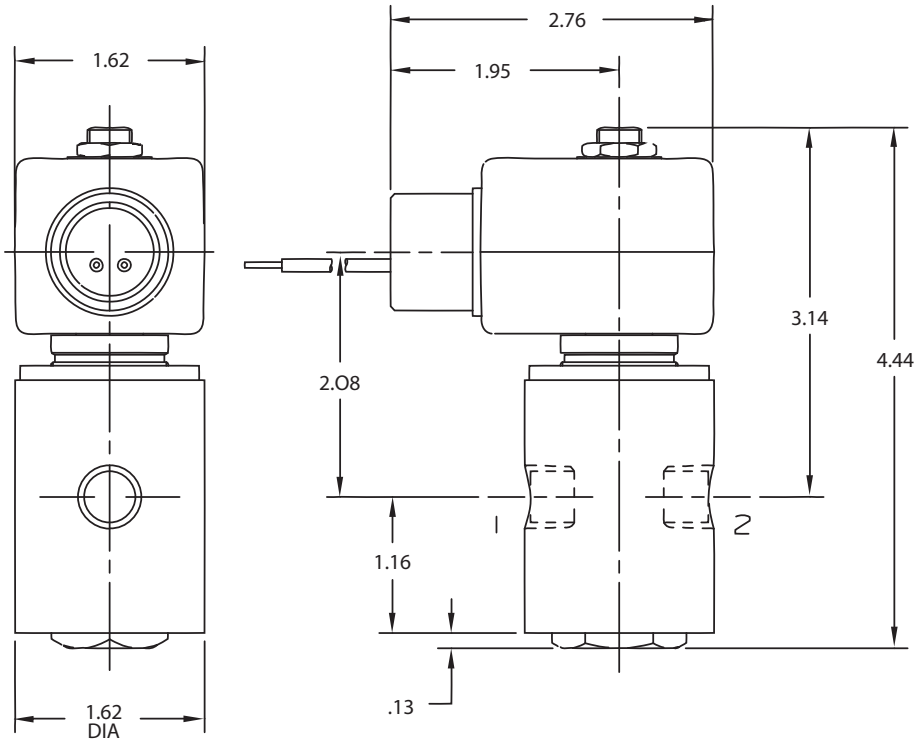

Parker Hannifin Corporation
Fluid Control Division
1 800 825 8305 (1 800 Valve05)
www.parker.com/fcd

Valve Reference A40



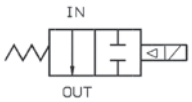

2-Way Normally Open
Port Identification:
P-IN/--OUT

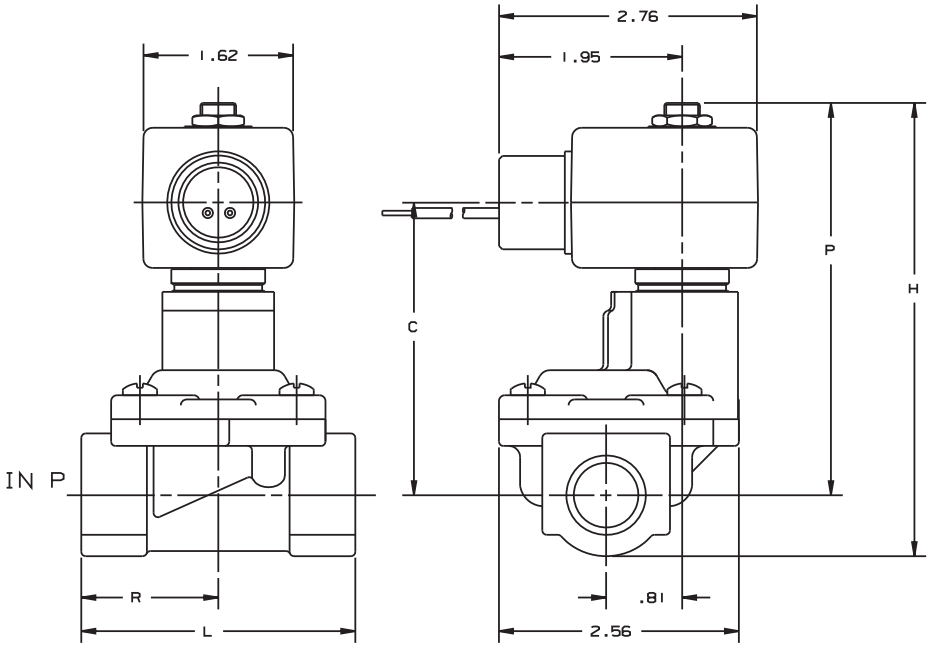

Valve	Dimensions				
	H	P	C	L	R
73228BN3TN00 73228BN4UN00	4.62	4.07	3.01	2.64	1.39
73228BN5VN00	4.83	4.17	3.11	2.72	1.43

Valve Reference A41



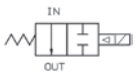

2-Way Normally Open
Port Identification:
P-IN/--OUT

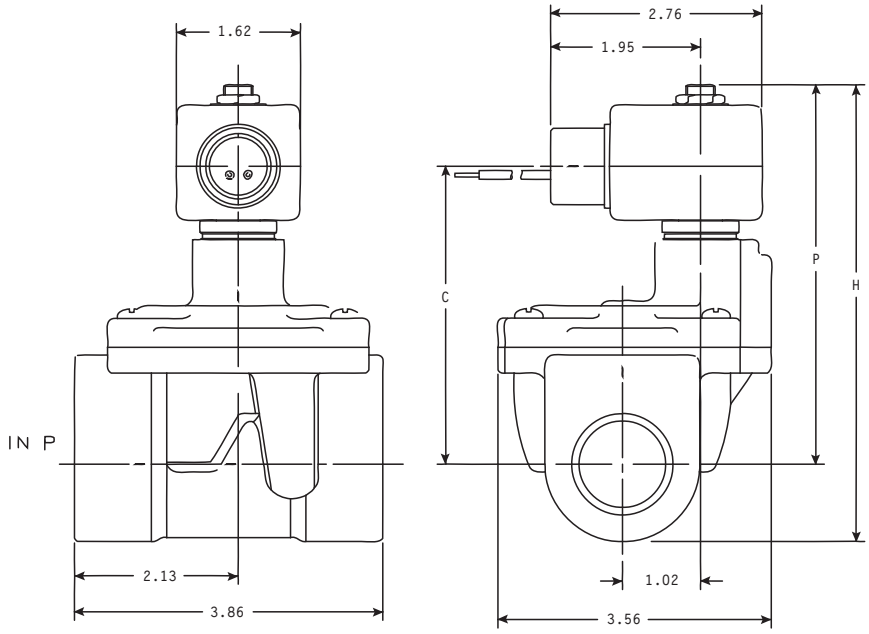

Valve	Dimensions		
	H	P	C
73228BN64N00 73228BN64V00	5.69	4.83	3.77
73228BN75N00 73228BN75V00	5.97	4.97	3.91

Valve Reference A42



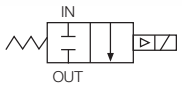

2-Way Normally Closed
73218xx

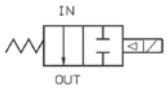

2-Way Normally Open
73228xx
Port Identification:
In-In/--Out

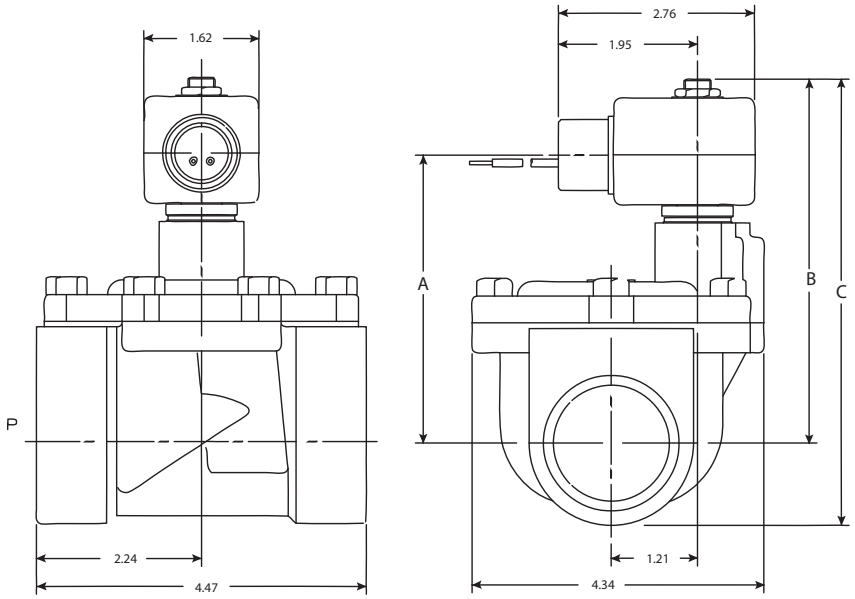

Valve	Dimensions		
	A	B	C
73218xxx	3.87	4.89	6.05
73228xxx	4.07	5.13	6.28

Valve Reference A43



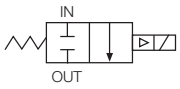

2-Way Normally Closed
73218xx
Port Identification:
P-IN/--OUT

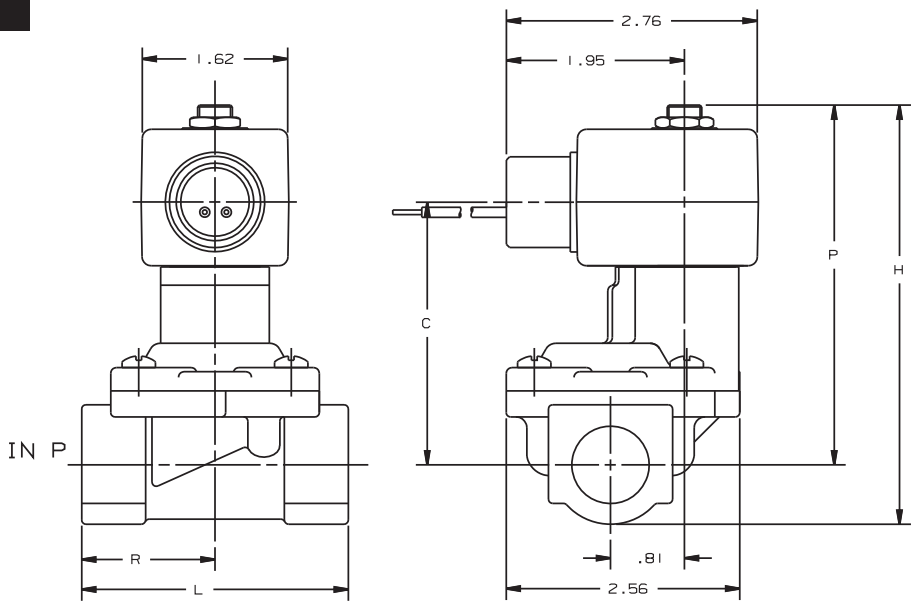

Valve	Dimensions				
	H	P	C	L	R
73218BN3TXXX 73218BN4UXXX	4.38	3.84	2.81	2.64	1.39
73218BN5VXXX	4.59	3.94	2.91	2.72	1.43

Parker Hannifin Corporation
Fluid Control Division
1 800 825 8305 (1 800 Valve05)
www.parker.com/fcd

Valve Reference A44



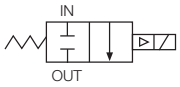

2-Way Normally Closed
Port Identification:
P-IN/--OUT

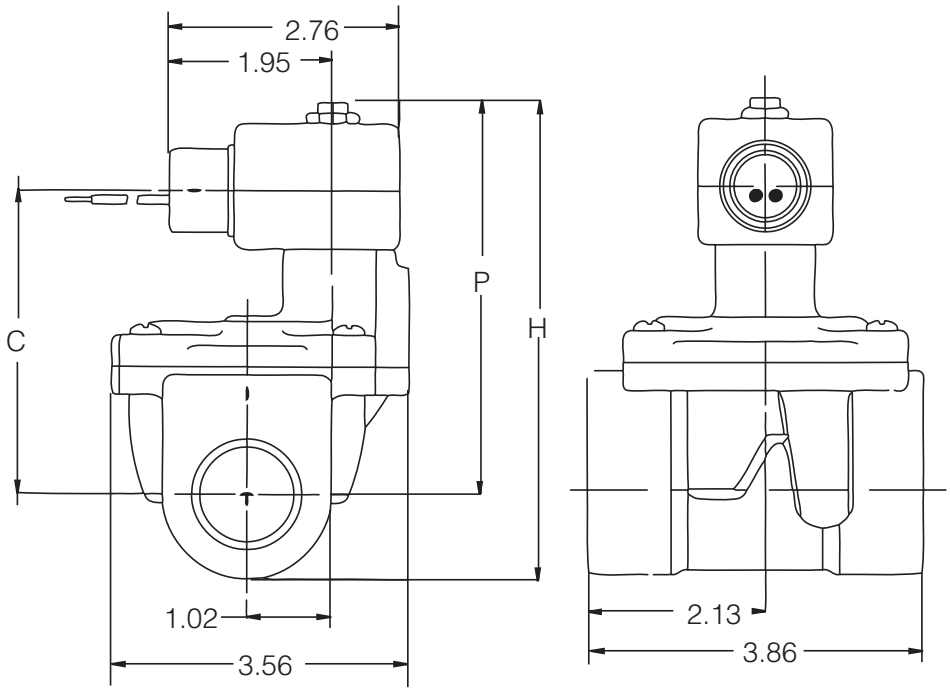

Valve	Dimensions		
	H	P	C
73218BN64XXX	5.45	4.59	3.57
73218BN75XXX	5.74	4.73	3.71

"X" denotes multiple digit combinations for brevity

Valve Reference A45



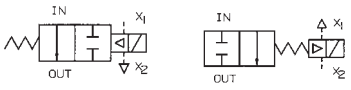

2-Way Normally Open 2-Way Normally Closed

2-Way Universal
Valve may be normally closed or
normally open, depending on piping of
external pilot.
Port identification:
In-In/Out-Out

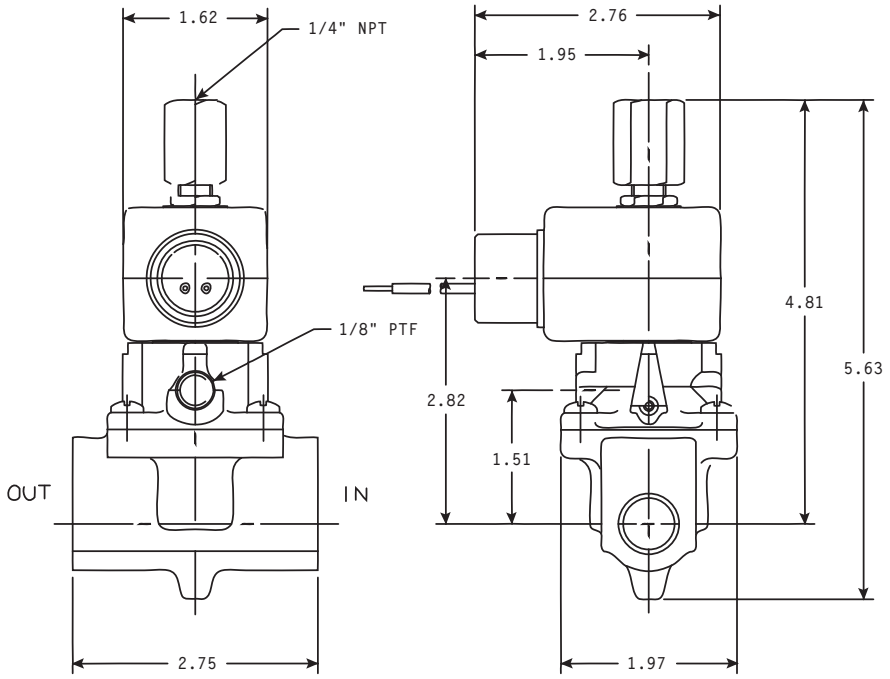

Valve Reference A46



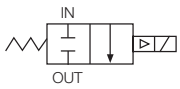

2-Way Normally Closed
Port Identification:
Flow arrow on body
indicates flow direction.
Ports are not marked.

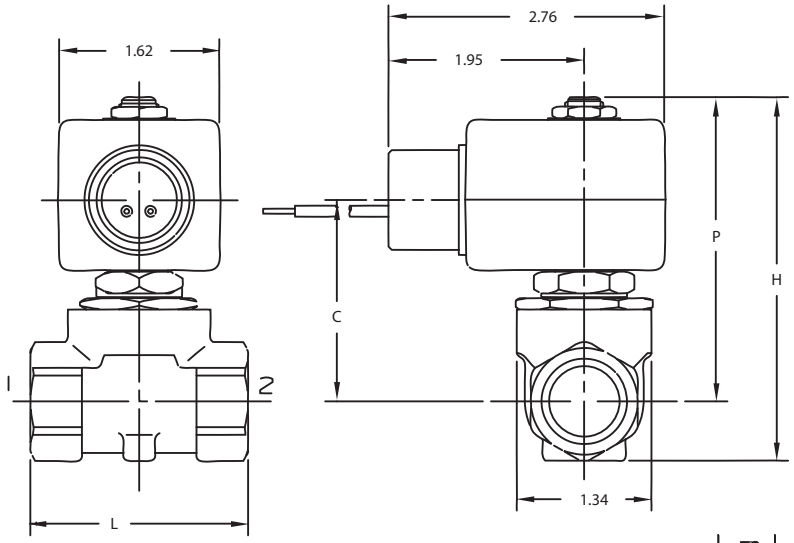

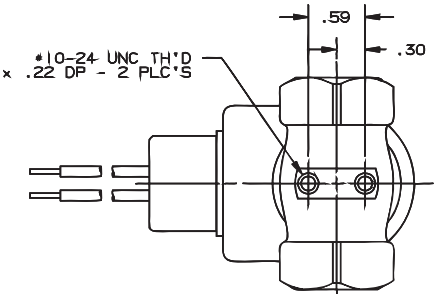

Valve	Dimensions			
	H	P	C	L
7321KBN2RXXX 7321KBN3SXXX	3.56	2.97	1.96	1.97
7321KBN4SXXX	3.56	2.97	1.96	2.17

Valve Reference A47



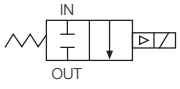

2-Way Normally Closed
Port Identification:
Flow arrow on body
indicates flow direction
Ports are not marked

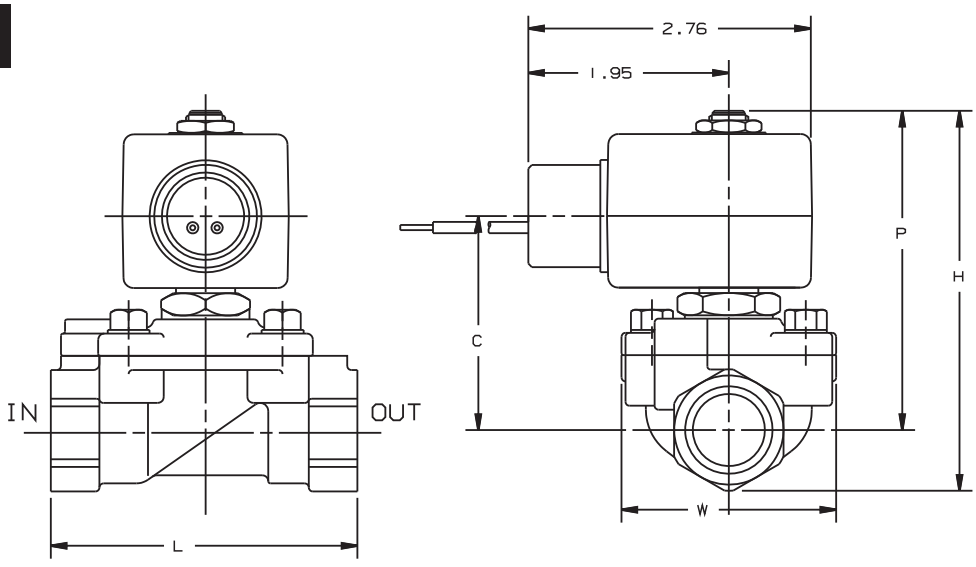

Valve	Dimensions				
	H	P	C	L	W
7221GBN3VXXX 7221GBN4VXXX	3.66	3.07	2.06	2.95	2.09
7221GBN51XXX	3.75	3.07	2.06	3.15	2.09
7221GBN61XXX	4.03	3.15	2.12	3.35	2.09
7221GBN64XXX	4.25	3.35	2.34	3.94	2.75

Parker Hannifin Corporation
Fluid Control Division
1 800 825 8305 (1 800 Valve05)
www.parker.com/fcd

Valve Reference A48



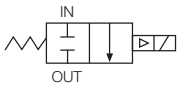

2-Way Normally Closed
7321GBNxx

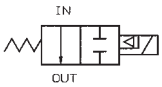

2-Way Normally Open
7322GBNxx

Port Identification:
Flow arrow on body indicates flow direction. Ports are not marked.

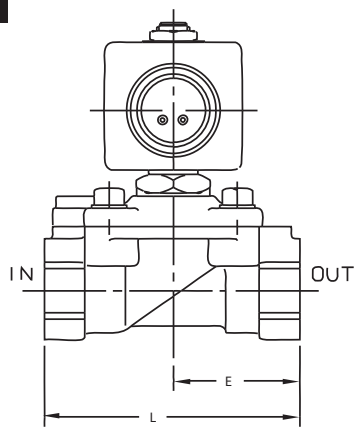

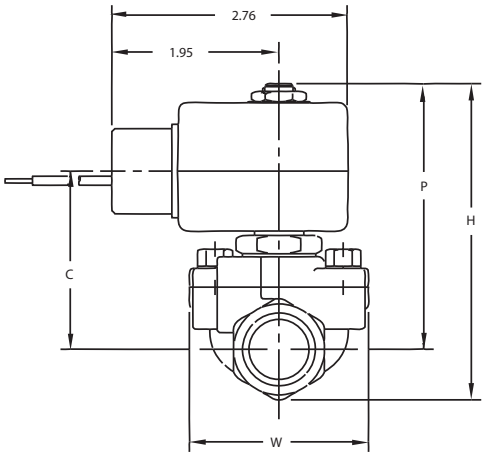

Valve	Dimensions					
	H	P	C	L	E	W
7321GBN53XXX 7322GBN53XXX 7321GBN64XXX 7322GBN64XXX	4.75	3.86	2.84	3.94	1.97	2.75
7321GBN76XXX 7322GBN76XXX	5.41	4.11	3.09	4.33	2.17	2.75
7321GBN88XXX 7322GBN88XXX	5.66	4.37	3.35	5.51	2.95	3.90
7321GBN99XXX 7322GBN99XXX	6.25	4.60	3.58	5.91	3.15	3.90

Valve Reference A49



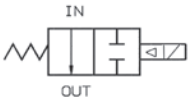

2-Way Normally Open
Port Identification:
IN-IN/ OUT-OUT

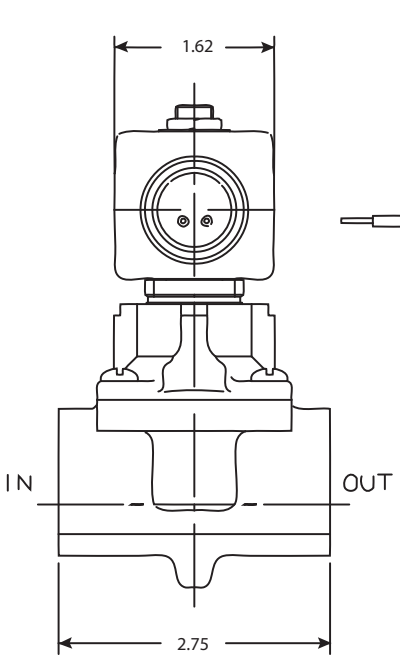

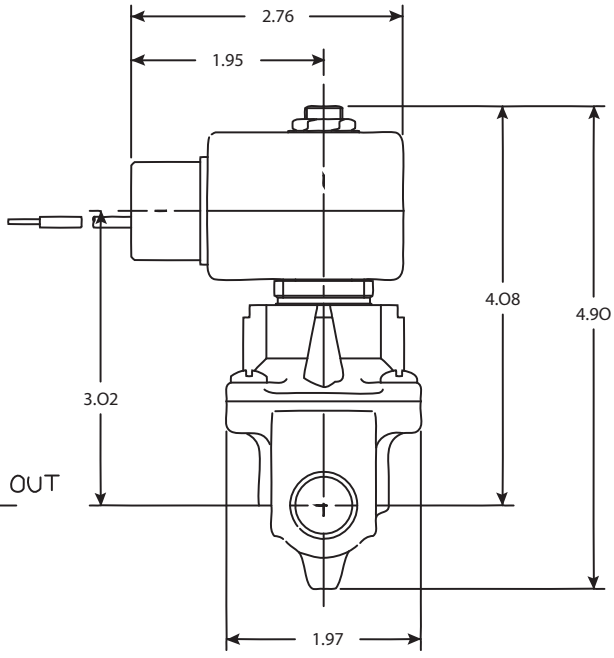

Valve Reference A50





2-Way Normally Open
Port Identification:
IN-IN/ OUT-OUT
(7322BN52xx)
P-IN/A-OUT
(7322BN63xx)

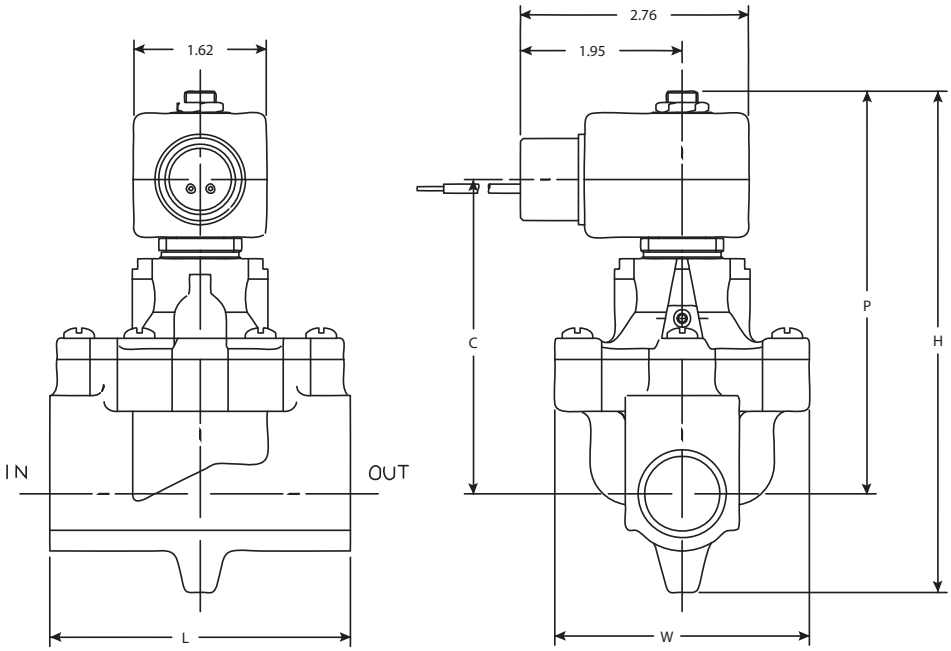

Valve	Dimensions				
	H	P	C	L	W
73222BN52N00	6.04	4.85	3.79	3.62	3.09
73222BN63N00	6.46	5.13	4.07	4.31	3.45

Valve Reference A51



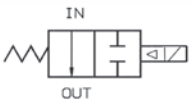

2-Way Normally Open
Port Identification:
IN-IN/ OUT-OUT

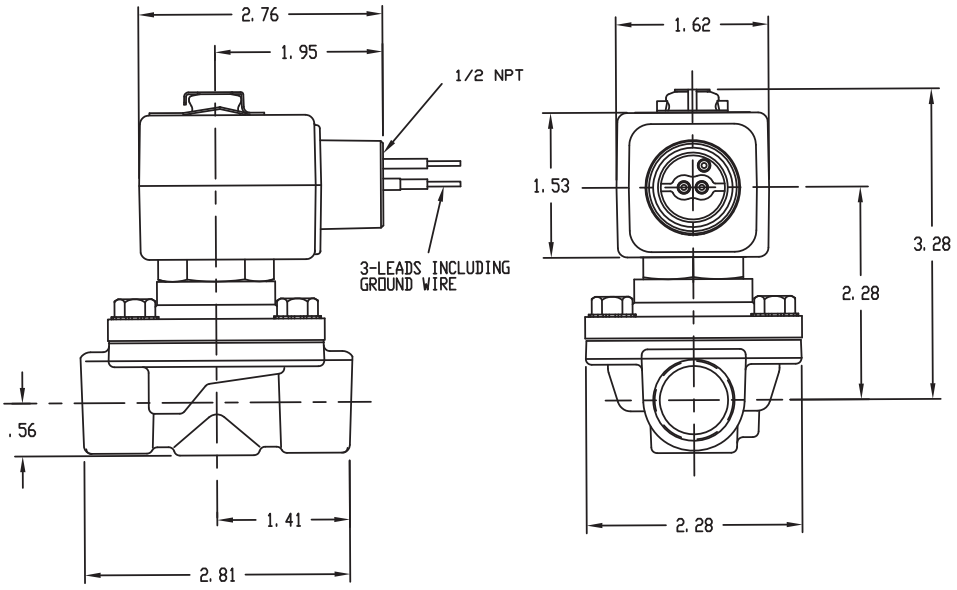

Explosion-proof watertight shown in outline

Parker Hannifin Corporation
Fluid Control Division
1 800 825 8305 (1 800 Valve05)
www.parker.com/fcd

Valve Reference A52



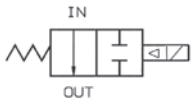

2-Way Normally Open
Port Identification:
IN-IN/ OUT-OUT

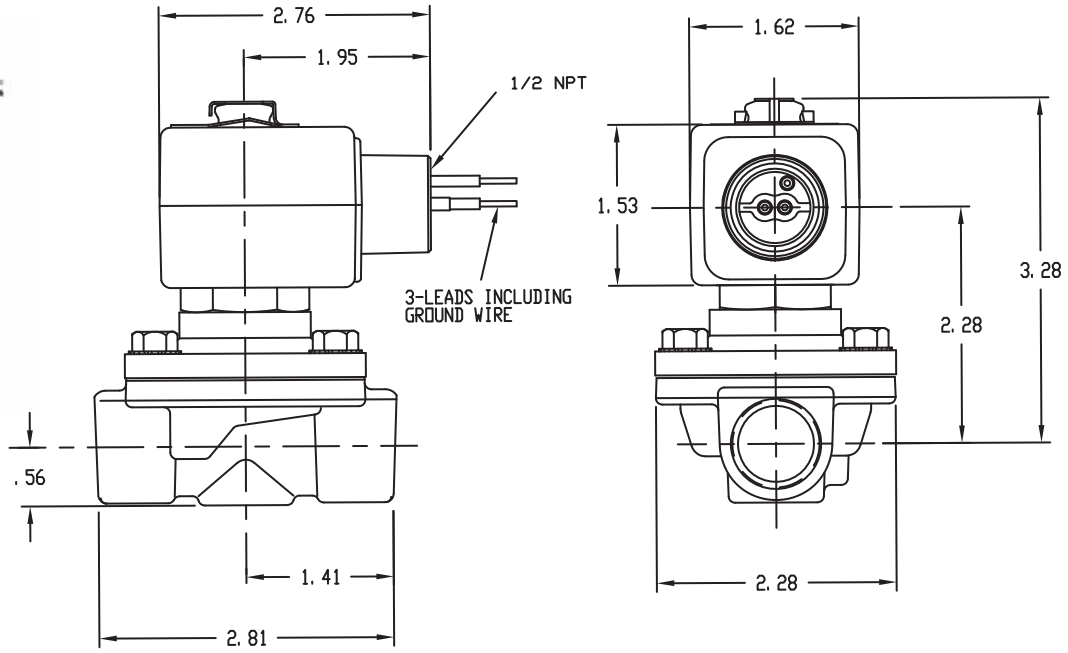

Valve Reference A54



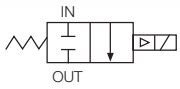

2-Way Normally Closed
04F25C2xx/06F25C2xx
Port Identification:
IN-IN/ OUT-OUT

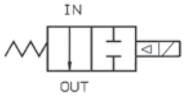

2-Way Normally Open
04F2502xx/06F2502xx
Port Identification:
IN-IN/ OUT-OUT

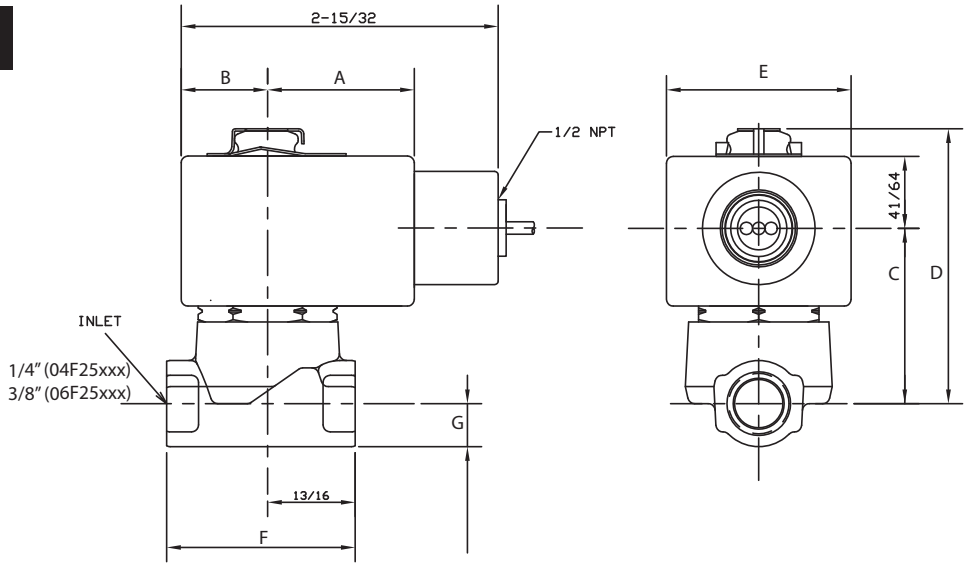

Valve	Dimensions						
	A	B	C	D	E	F	G
04F25C2122CAF	1 5/16	23/32	1 9/16	2 7/16	1 9/16	1 3/4	3/8
06F25C2122CAF	1 5/16	23/32	1 5/8	2 1/2	1 9/16	1 3/4	7/16
04F25O2122CCF 04F25O2122C3F	1 17/32	7/8	1 25/32	2 7/8	1 13/16	1 3/4	3/8
04F25C2122C3F	1 17/32	7/8	1 15/16	2 7/8	1 13/16	1 3/4	3/8
06F25C2122C3F	1 17/32	7/8	2	2 15/16	1 13/16	1 3/4	7/16

Valve Reference A55



2-Way Normally Open
Remote Pilot
Port Identification:
3/8, 1/2, 3/4
IN-IN/ OUT-OUT
Port Identification - 1"
P - IN/A - OUT

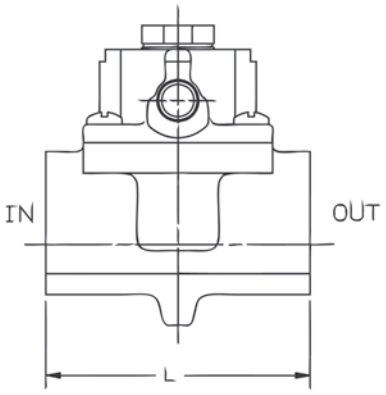

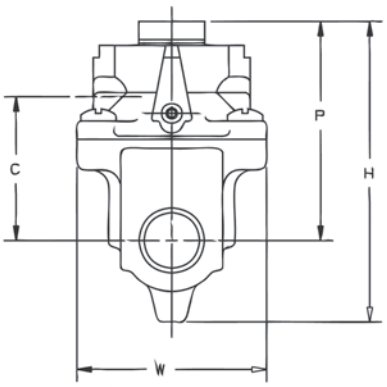

Valve	Dimensions					Port Identification	
	H	P	C	L	W	IN	OUT
75232BN3SN00	3.17	2.35	1.51	2.75	1.97	IN	OUT
75232BN4TN00	3.17	2.35	1.51	2.75	1.97	IN	OUT
75232BN52N00	4.31	3.12	2.28	4.62	3.09	IN	OUT

- **Valve can be normally closed or normally open depending on piping of external pilot.**
- **Pilot port is marked "C."**

Parker Hannifin Corporation
Fluid Control Division
1 800 825 8305 (1 800 Valve05)
www.parker.com/fcd

2-Way Pilot Operated Materials of Construction**

Product*	Wattage	Type	Port Size	Body	Sleeve Tube	Sleeve Stop	Sleeve Flange	"Plunger Blank"	Plunger Spring	Shading Ring	Max. Ambient Temp.
04F25C2	6	2WNC	1/4	Brass	305SS	430FR	Brass	430FR	302SS	Copper	130°F
04F25C2	11.5	2WNC	1/4	Brass	305SS	430FR	Brass	430FR	302SS	Copper	77°F
04F25O2	11	2WNO	1/4	Brass	305SS	430FR	416/430FR	430FR	302SS	Copper	130°F
04F25O2	11.5	2WNO	1/4	Brass	305SS	430FR	416/430FR	430FR	302SS	Copper	77°F
06F22C2	6	2WNC	3/8	Brass	305SS	430FR	Brass	430FR	302SS	Copper	77°F
06F22C2	11.5, 16	2WNC	3/8	Brass	305SS	430FR	12L14 Plated	430FR	302SS	Copper	130°F
06F22C6	6	2WNC	3/8	316SS	305SS	430FR	12L14 Plated	430FR	302SS	Silver	77°F
06F22C6	11.5, 16	2WNC	3/8	316SS	305SS	430FR	12L14 Plated	430FR	302SS	Silver	130°F
06F23C2	11	2WNC	3/8	Brass	305SS	430FR	12L14 Plated	430FR	302SS	Copper	130°F
06F23C2	11.5	2WNC	3/8	Brass	305SS	430FR	12L14 Plated	430FR	302SS	Copper	77°F
06F23C6	11	2WNC	3/8	316SS	305SS	430FR	12L14 Plated	430FR	302SS	Silver	130°F
06F23C6	11.5	2WNC	3/8	316SS	305SS	430FR	12L14 Plated	430FR	302SS	Silver	77°F
06F23O2	11	2WNO	3/8	Brass	305SS	430FR	12L14 Plated	430FR	302SS	Copper	130°F
06F23O2	11.5	2WNO	3/8	Brass	305SS	430FR	12L14 Plated	430FR	302SS	Copper	77°F
06F23O6	11	2WNO	3/8	316SS	305SS	430FR	12L14 Plated	430FR	302SS	Silver	130°F
06F23O6	11.5	2WNO	3/8	316SS	305SS	430FR	12L14 Plated	430FR	302SS	Silver	77°F
06F25C2	6,11	2WNC	3/8	Brass	305SS	430FR	Brass	430FR	302SS	Copper	130°F
06F25C2	11.5	2WNC	3/8	Brass	305SS	430FR	Brass	430FR	302SS	Copper	77°F
06F25O2	11	2WNO	3/8	Brass	305SS	430FR	416/430FR	430FR	302SS	Copper	130°F
06FH5C2	11	2WNC	3/8	Brass	305SS	430FR	Brass	430FR	302SS	Copper	130°F
08F22C2	6	2WNC	1/2	Brass	305SS	430FR	Brass	430FR	302SS	Copper	130°F
08F22C2	11	2WNC	1/2	Brass	305SS	430FR	12L14 Plated	430FR	302SS	Copper	130°F
08F22C2	11.5, 16	2WNC	1/2	Brass	305SS	430FR	12L14 Plated	430FR	302SS	Copper	77°F
08F22C6	11.5, 16	2WNC	1/2	316SS	305SS	430FR	12L14 Plated	430FR	302SS	Silver	77°F

* Shows the first 7 digits of the pressure vessel part number.

** Maximum ambient temperature shown is the rating when valve is operating at the maximum fluid temperature as shown in the product sections for each of the valves in this catalog.

2-Way Pilot Operated Materials of Construction (Continued)**

Product*	Wattage	Type	Port Size	Body	Sleeve Tube	Sleeve Stop	Sleeve Flange	"Plunger Blank"	Plunger Spring	Shading Ring	Max. Ambient Temp.
08F23C2	11	2WNC	1/2	Brass	305SS	430FR	12L14 Plated	430FR	302SS	Copper	130°F
08F23C2	11.5	2WNC	1/2	Brass	305SS	430FR	12L14 Plated	430FR	302SS	Copper	77°F
08F23C6	11	2WNC	1/2	316SS	305SS	430FR	12L14 Plated	430FR	302SS	Silver	130°F
08F23C6	11.5	2WNC	1/2	316SS	305SS	430FR	12L14 Plated	430FR	302SS	Silver	77°F
08F23O2	11	2WNO	1/2	Brass	305SS	430FR	12L14 Plated	430FR	302SS	Copper	130°F
08F23O2	11.5	2WNO	1/2	Brass	305SS	430FR	12L14 Plated	430FR	302SS	Copper	77°F
08F23O6	11	2WNO	1/2	316SS	305SS	430FR	12L14 Plated	430FR	302SS	Silver	130°F
08F23O6	11.5	2WNO	1/2	316SS	305SS	430FR	12L14 Plated	430FR	302SS	Silver	77°F
08F25C2	11	2WNC	1/2	Brass	305SS	430FR	Brass	430FR	302SS	Copper	130°F
08F25C2	11.5	2WNC	1/2	Brass	305SS	430FR	Brass	430FR	302SS	Copper	77°F
08F25O2	11	2WNO	1/2	Brass	305SS	430FR	Brass	430FR	302SS	Copper	130°F
08F25O2	11.5	2WNO	1/2	Brass	305SS	430FR	Brass	430FR	302SS	Copper	77°F
08FH5C2	11	2WNC	1/2	Brass	305SS	430FR	Brass	430FR	302SS	Copper	130°F
12F22C2	6	2WNC	3/4	Brass	305SS	430FR	Brass	430FR	302SS	Copper	130°F
12F22C2	11.5	2WNC	1/2	Brass	305SS	430FR	12L14 Plated	430FR	302SS	Copper	77°F
12F22C6	11.5, 16	2WNC	3/4	316SS	305SS	430FR	12L14 Plated	430FR	302SS	Silver	77°F
12F23C2	11	2WNC	3/4	Brass	305SS	430FR	12L14 Plated	430FR	302SS	Copper	130°F
12F23C2	11.5	2WNC	3/4	Brass	305SS	430FR	12L14 Plated	430FR	302SS	Copper	77°F
12F23C6	11	2WNC	3/4	316SS	305SS	430FR	12L14 Plated	430FR	302SS	Silver	130°F
12F23C6	11.5	2WNC	3/4	316SS	305SS	430FR	12L14 Plated	430FR	302SS	Silver	77°F
12F23O2	11	2WNO	3/4	Brass	305SS	430FR	12L14 Plated	430FR	302SS	Copper	130°F

* Shows the first 7 digits of the pressure vessel part number.

** Maximum ambient temperature shown is the rating when valve is operating at the maximum fluid temperature as shown in the product sections for each of the valves in this catalog.

Parker Hannifin Corporation
Fluid Control Division
1 800 825 8305 (1 800 Valve05)
www.parker.com/fcd

2-Way Pilot Operated Materials of Construction (Continued)**

Product*	Wattage	Type	Port Size	Body	Sleeve Tube	Sleeve Stop	Sleeve Flange	"Plunger Blank"	Plunger Spring	Shading Ring	Max. Ambient Temp.
12F23O2	11.5	2WNO	3/4	Brass	305SS	430FR	12L14 Plated	430FR	302SS	Copper	77°F
12F23O6	11	2WNO	3/4	316SS	305SS	430FR	12L14 Plated	430FR	302SS	Silver	130°F
12F23O6	11.5	2WNO	3/4	316SS	305SS	430FR	12L14 Plated	430FR	302SS	Silver	77°F
12F24C2	6	2WNC	3/4	Brass	305SS	430FR	Brass	430FR	302SS	Copper	130°F
12F24C2	11.5	2WNC	1/2	Brass	305SS	430FR	12L14 Plated	430FR	302SS	Copper	77°F
12F24O2	11	2WNO	3/4	Brass	305SS	430FR	12L14 Plated	430FR	302SS	Copper	130°F
12F25C2	11	2WNC	3/4	Brass	305SS	430FR	Brass	430FR	302SS	Copper	130°F
12F25O2	11	2WNO	3/4	Brass	305SS	430FR	12L14 Plated	430FR	302SS	Copper	130°F
12FH5C2	11	2WNC	3/4	Brass	305SS	430FR	Brass	430FR	302SS	Copper	130°F
16F24C2	6	2WNC	3/4	Brass	305SS	430FR	Brass	430FR	302SS	Copper	130°F
16F24C2	11.5	2WNC	1/2	Brass	305SS	430FR	12L14 Plated	430FR	302SS	Copper	77°F
16F24C6	6	2WNC	3/4	316SS	305SS	430FR	303	430FR	302SS	Silver	130°F
16F24C6	11.5	2WNC	1/2	316SS	305SS	430FR	12L14 Plated	430FR	302SS	Silver	77°F
16F24O2	11.5	2WNO	1	Brass	305SS	430FR	12L14 Plated	430FR	302SS	Copper	77°F
16F24O2	11	2WNO	1	Brass	305SS	430FR	12L14 Plated	430FR	302SS	Copper	130°F
16F24O6	11.5	2WNO	1	316SS	305SS	430FR	12L14 Plated	430FR	302SS	Silver	77°F
16F24O6	11	2WNO	1	316SS	305SS	430FR	12L14 Plated	430FR	302SS	Silver	130°F
16F25C2	11.5	2WNC	1	Brass	305SS	430FR	12L14 Plated	430FR	302SS	Copper	77°F
16F25C2	11	2WNC	1	Brass	305SS	430FR	12L14 Plated	430FR	302SS	Copper	130°F
16F25O2	11	2WNO	1	Brass	305SS	430FR	12L14 Plated	430FR	302SS	Copper	130°F
16FH5C2	16	2WNC	1	Brass	305SS	430FR	12L14 Plated	430FR	302SS	Copper	77°F

* Shows the first 7 digits of the pressure vessel part number.
** Maximum ambient temperature shown is the rating when valve is operating at the maximum fluid temperature as shown in the product sections for each of the valves in this catalog.

2-Way Pilot Operated Materials of Construction (Continued)**

Product*	Wattage	Type	Port Size	Body	Sleeve Tube	Sleeve Stop	Sleeve Flange	"Plunger Blank"	Plunger Spring	Shading Ring	Max. Ambient Temp.
20F24C2	6	2WNC	3/4	Brass	305SS	430FR	Brass	430FR	302SS	Copper	130°F
20F24C2	11.5	2WNC	1/2	Brass	305SS	430FR	12L14 Plated	430FR	302SS	Copper	77°F
20F24O2	11	2WNO	1¼	Brass	305SS	430FR	12L14 Plated	430FR	302SS	Copper	130°F
24F24C2	6	2WNC	3/4	Brass	305SS	430FR	Brass	430FR	302SS	Copper	130°F
24F24C2	11.5	2WNC	1/2	Brass	305SS	430FR	12L14 Plated	430FR	302SS	Copper	77°F
24F24C6	6	2WNC	3/4	316SS	305SS	430FR	303	430FR	302SS	Silver	130°F
24F24C6	11.5	2WNC	1/2	316SS	305SS	430FR	12L14 Plated	430FR	302SS	Silver	77°F
24F24O2	11.5	2WNO	1½	Brass	305SS	430FR	12L14 Plated	430FR	302SS	Copper	77°F
24F24O2	11	2WNO	1½	Brass	305SS	430FR	12L14 Plated	430FR	302SS	Copper	130°F
24F24O6	11.5	2WNO	1½	316SS	305SS	430FR	12L14 Plated	430FR	302SS	Silver	77°F
24F24O6	11	2WNO	1½	316SS	305SS	430FR	12L14 Plated	430FR	302SS	Silver	130°F
72218BN	10	2WNC	3/8 - 3/4	Brass	304SS	430FR	430F	430FR	18-8SS	Copper	150°F
72218BN	22	2WNC	3/8 - 3/4	Brass	304SS	430FR	430F	430FR	18-8SS	Copper	77°F
72218RN	10	2WNC	3/8 - 3/4	316SS	304SS	430FR	430F	430FR	18-8SS	Copper	150°F
72218RN	22	2WNC	3/8 - 3/4	316SS	304SS	430FR	430F	430FR	18-8SS	Copper	77°F
7221GBN	10	2WNC	3/8 - 1	Brass	304SS	430FR	430F	430FR/ 4106	301SS	Copper	150°F
7221GBN	22	2WNC	3/8 - 1	Brass	304SS	430FR	430F	430FR/ 4106	301SS	Copper	77°F
72228BN	10	2WNO	3/8 - 3/4	Brass	304SS	430FR	430F	430FR	18-8SS	Copper	150°F
72228BN	22	2WNO	3/8 - 3/4	Brass	304SS	430FR	430F	430FR	18-8SS	Copper	77°F
72228RN	10	2WNO	3/8 - 3/4	316SS	304SS	430FR	430F	430FR	18-8SS	Copper	150°F
72228RN	22	2WNO	3/8 - 3/4	316SS	304SS	430FR	430F	430FR	18-8SS	Copper	77°F
73212BN	10	2WNC	1/4 - 1	Brass	304SS	430FR	430F	430FR	18-8SS	Copper	150°F
73212BN	22	2WNC	1/4 - 1	Brass	304SS	430FR	430F	430FR	18-8SS	Copper	77°F

* Shows the first 7 digits of the pressure vessel part number.

** Maximum ambient temperature shown is the rating when valve is operating at the maximum fluid temperature as shown in the product sections for each of the valves in this catalog.

Parker Hannifin Corporation
Fluid Control Division
1 800 825 8305 (1 800 Valve05)
www.parker.com/fcd

2-Way Pilot Operated Materials of Construction (Continued)**

Product*	Watt	Type	Port Size	Body	Sleeve Tube	Sleeve Stop	Sleeve Flange	"Plunger Blank"	Plunger Spring	Shading Ring	Max. Ambient Temp.
73212SN	10	2WNC	1/4	430F	304SS	430FR	430F	430FR	18-8SS	Copper	150°F
73212SN	22	2WNC	1/4	430F	304SS	430FR	430F	430FR	18-8SS	Copper	77°F
73218BN	10	2WNC	3/8 - 1½	Brass	304SS	430FR	430F	430FR	18-8SS	Copper	150°F
73218BN	22	2WNC	3/8 - 1½	Brass	304SS	430FR	430F	430FR	18-8SS	Copper	77°F
7321GBN	10	2WNC	3/4 - 2	Brass	304SS	430FR	430F	430FR	18-8SS	Copper	150°F
7321GBN	22	2WNC	3/4 - 2	Brass	304SS	430FR	430F	430FR	18-8SS	Copper	77°F
7321KBN	10	2WNC	1/4 - 1/2	Brass	304SS	430FR	430F	430FR	18-8SS	Copper	150°F
7321KBN	22	2WNC	1/4 - 1/2	Brass	304SS	430FR	430F	430FR	18-8SS	Copper	77°F
73222BN	10	2WNO	1/4 - 1	Brass	304SS	430FR	430F	430FR	18-8SS	Copper	150°F
73222BN	22	2WNO	1/4 - 1	Brass	304SS	430FR	430F	430FR	18-8SS	Copper	77°F
73222SN	10	2WNO	1/4	430F	304SS	430FR	430F	430FR	18-8SS	Copper	150°F
73222SN	22	2WNO	1/4	430F	304SS	430FR	430F	430FR	18-8SS	Copper	77°F
73228BN	10	2WNO	3/8 - 1½	Brass	304SS	430FR	430F	430FR	18-8SS	Copper	150°F
73228BN	22	2WNO	3/8 - 1½	Brass	304SS	430FR	430F	430FR	18-8SS	Copper	77°F
7322GBN	10	2WNO	3/4 - 2	Brass	304SS	430FR	430F	430FR	301SS	Copper	150°F
7322GBN	22	2WNO	3/4 - 2	Brass	304SS	430FR	430F	430FR	301SS	Copper	77°F
74232BN	10	2WDP	3/8 - 1	Brass	304SS	430FR	430F	430FR	18-8SS	Copper	150°F
74232BN	22	2WDP	3/8 - 1	Brass	304SS	430FR	430F	430FR	18-8SS	Copper	77°F
75232***	-	UNIV	3/8-2	Brass	N/A	N/A	N/A	N/A	N/A	N/A	-

* Shows the first 7 digits of the pressure vessel part number.

** Maximum ambient temperature shown is the rating when valve is operating at the maximum fluid temperature as shown in the product sections for each of the valves in this catalog.

*** Pilot Orifice is 303SS. These are remotely piloted valves. No coil required.

AHU-2: BUILDING STATIC PRESS PROBE,

Static Pressure Accessories

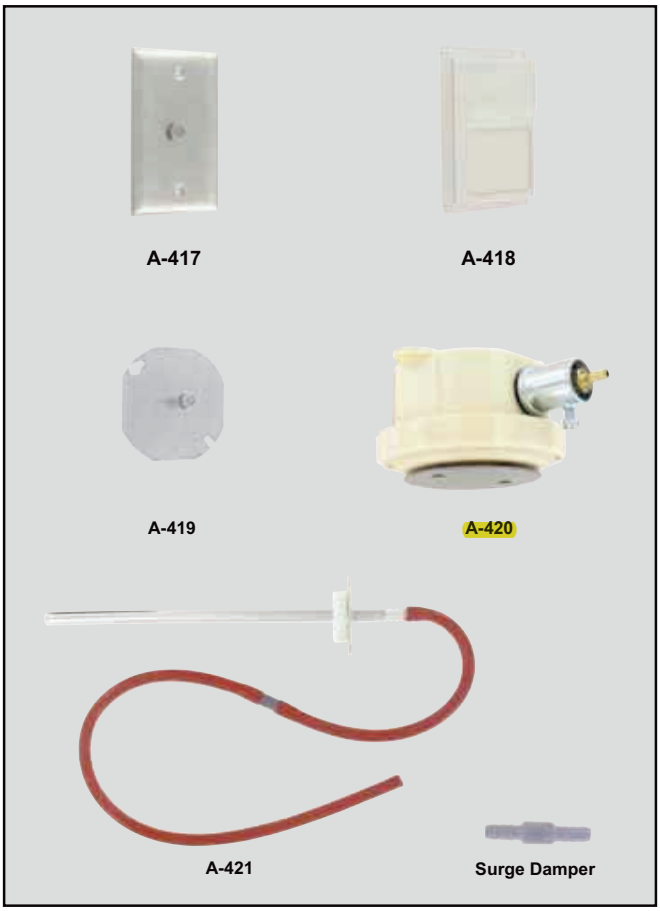

Model A-417, Static Pressure Pickup. For use in clean rooms, 100 micron filter picks up static pressure. Stainless steel wall plate fits 2″ x 4″ electrical box. Sealed with foam gasket, screws included. Barbed brass fitting holds 1/8″ to 5/32″ I.D. tubing.

Model A-418, Static Pressure Pickup. Room mount with Delta Style plastic enclosure fits 2″ x 4″ electrical box. Fine mesh screen hides static pressure pickup port. Clean connection to 1/8″ to 5/32″ I.D. tubing and pressure sensor. Sealed with foam gasket, screws included.

Model A-419, Static Pressure Pickup Ceiling Mount. Plate rests on top of standard 3/4″ thick ceiling tile while 100 micron filter faces down through 5/8″ hole in tile. Filter is barely noticeable in room being monitored. Screws included for optional mounting to junction box. Barbed brass fitting holds 1/8″ to 5/32″ I.D. tubing.

Model A-420, Static Pressure Pickup for Roof or Outside Wall Mount. Port especially reduces effects of wind gusts to keep pressure readings stable when plate is parallel to ground. NEMA 4X (IP66) rated structure withstands harsh environmental elements. Structure is 3-5/8″ across and 2-1/2″ deep. EMT Conduit fitting is 1/2″. Pressure connection is brass barbed fitting for 1/4″ tubing.

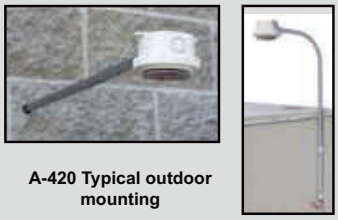

A-420 Typical outdoor mounting

Model A-421, Static Pressure Tip measures duct static air pressure. Assembly includes 6″ probe, silicon rubber hose, and screws. Built-in surge damper ensures stable readings on pressure sensor. Pressure spike reducer can be added to end of tube to further smooth over pressure fluctuations.

Static Pressure Sensors



MODELS

These sensors are for use with manometers, Magnehelic® gages, pressure switches and other controllers to pick up or sense static pressure drop across air filters and cooling coils, blower input and discharge pressures, etc. The angled tips shown have 4″ insertion depth. Each has four radially drilled .040″ sensing holes. All except Model A-303 mount in 3/8″ hole in duct. For portable use, a magnet holds No. A-303 in place. No. A-305 is used where a very low actuation or sensing point is required on a pressure switch or gage or where response time is critical. No. A-307 and A-308 are suitable for use in low velocity systems or where the need for accuracy is less critical.

A-301, Static Pressure Tip, for 1/4″ metal tubing connection.
A-301-A, Static Pressure Tip, same as A-301 with 6″ insertion depth.
A-301-B, Static Pressure Tip, same as A-301 with 8″ insertion depth.
A-301-C, Static Pressure Tip, same as A-301 with 12″ insertion depth.
A-301-SS, same as A-301 in Stainless Steel.
A-302, Static Pressure Tip, for 3/16″ and 1/8″ I.D. plastic or rubber tubing.
A-302-A, Static Pressure Tip, same as A-302 with 6″ insertion depth.
A-303, Portable Static Pressure Tip, for 3/16″ I.D. rubber or plastic tubing with 4″ insertion.
A-305, Static Pressure Tip, low resistance application, furnished with two (2) hex jam nuts and two (2) mounting washers for duct mounting and with 1/8″ NPT pipe thread for pressure connection.
A-305-SS, same as A-305 in Stainless Steel.
A-306, Outdoor static pressure sensor. Provides average outdoor pressure signal for reference in building pressurization applications. Includes sensor, 50 ft. vinyl tubing, mounting bracket and hardware.
A-306-A, Outdoor static pressure sensor. Provides average outdoor pressure signal for reference in building pressurization applications. Includes sensor, 50 ft. vinyl tubing, mounting bracket and hardware. Gray Sensor.
A-307, Static Pressure Fitting, for 1/4″ metal tubing connection.
A-307-SS, as above in Stainless Steel.
A-308, Static Pressure Fitting, for 3/16″ and 1/8″ I.D. plastic or rubber tubing.
A-345, Flange for mounting A-301, A-302, A-307, A-308 or 1/8″ dia. Pitot Tubes with compression fitting when interior of duct is not accessible. Aluminum, with gasket and sheet metal screws.
A-414, 316 SS Clean Room Pressure Sensor.

RH Series Compact Power Relays

Key features

- SPDT through 4PDT, 10A contacts
- Compact power type relays
- Miniature power relays with a large capacity
- 10A contact capacity
- Compact size saves space

(PANEL MOUNT)
AHU-2: UNIT ENABLE
AHU-3: EF HISPEED, LOSPEED, SF HISPEED, LOSPEED, SDR



Part Number Selection

Contact	Model	Part Number: Blade Terminal	Part Number: PCB Terminal	Coil Voltage Code (Standard Stock in bold)
SPDT 	Standard	RH1B-U ☐	RH1V2-U ☐	AC6V, AC12V, **AC24V**, AC110V, **AC120V**, AC220V, **AC240V** DC6V, **DC12V**, **DC24V**, DC48V, DC110V
	With Indicator	RH1B-UL ☐	—	
	With Check Button	RH1B-UC ☐	—	
	With Indicator and Check Button	RH1B-ULC ☐	—	
	Top Bracket Mounting	RH1B-UT ☐	—	
	With Diode (DC coil only)	RH1B-UD ☐	RH1V2-UD ☐	DC6V, **DC12V**, **DC24V**, DC48V, DC110V
	With Indicator and Diode (DC coil only)	RH1B-ULD ☐	—	**DC12V**, **DC24V**, DC48V, DC110V
DPDT 	Standard	RH2B-U ☐	RH2V2-U ☐	AC6V, AC12V, **AC24V**, **AC110-120V**, **AC220-240V** DC6V, **DC12V**, **DC24V**, DC48V, DC100-110V
	With Indicator	RH2B-UL ☐	RH2V2-UL ☐	
	With Check Button	RH2B-UC ☐	—	
	With Indicator and Check Button	RH2B-ULC ☐	—	
	Top Bracket Mounting	RH2B-UT ☐	—	
	With Diode (DC coil only)	RH2B-UD ☐	RH2V2-UD ☐	DC6V, **DC12V**, **DC24V**, DC48V, DC100-110V
	With Indicator and Diode (DC coil only)	RH2B-ULD ☐	RH2V2-ULD ☐	
3PDT 	Standard	RH3B-U ☐	RH3V2-U ☐	AC6V, AC12V, **AC24V**, AC110V, **AC120V**, AC220V, **AC240V** DC6V, **DC12V**, **DC24V**, DC48V, DC110V
	With Indicator	RH3B-UL ☐	RH3V2-UL ☐	
	With Check Button	RH3B-UC ☐	—	
	With Indicator and Check Button	RH3B-ULC ☐	—	
	Top Bracket Mounting	RH3B-UT ☐	—	
	With Diode (DC coil only)	RH3B-UD ☐	—	DC6V, DC12V, DC24V, DC48V, DC110V
	With Indicator and Diode (DC coil only)	RH3B-ULD ☐	—	
4PDT 	Standard	RH4B-U ☐	RH4V2-U ☐	AC6V, AC12V, **AC24V**, AC110V, **AC120V**, AC220V, **AC240V** DC6V, **DC12V**, **DC24V**, DC48V, DC110V
	With Indicator	RH4B-UL ☐	RH4V2-UL ☐	
	With Check Button	RH4B-UC ☐	—	
	With Indicator and Check Button	RH4B-ULC ☐	—	
	Top Bracket Mounting	RH4B-UT ☐	—	
	With Diode (DC coil only)	RH4B-UD ☐	RH4V2-UD ☐	DC6V, DC12V, DC24V, DC48V, DC110V
	With Indicator and Diode (DC coil only)	RH4B-ULD ☐	—	

PCB terminal relays are designed to mount directly to a circuit board without any socket.

Ordering Information
When ordering, specify the Part No. and coil voltage code:
(example) **RH3B-U** (Part No.) **AC120V** (Coil Voltage Code)

Sockets (for Blade Terminal Models)

Relays	Standard DIN Rail Mount [1]	Finger-safe DIN Rail Mount [1]	Through Panel Mount	PCB Mount
RH1B	SH1B-05	SH1B-05C	SH1B-51	SH1B-62
RH2B	SH2B-05	SH2B-05C	SH2B-51	SH2B-62
RH3B	SH3B-05	SH3B-05C	SH3B-51	SH3B-62
RH4B	SH4B-05	SH4B-05C	SH4B-51	SH4B-62
				

1. DIN Rail mount socket comes with two horseshoe clips. Do not use unless you plan to insert pullover wire spring. Replacement horseshoe clip part number is Y778-011.

Hold Down Springs & Clips

Appearance	Item	Relay	For DIN Mount Socket	For Through Panel & PCB Mount Socket
	Pullover Wire Spring	RH1B	SY2S-02F1 [2]	SY4S-51F1
		RH2B	SY4S-02F1 [2]	
		RH3B	SH3B-05F1 [2]	
		RH4B	SH4B-02F1 [2]	
	Leaf Spring (side latch)	RH1B, RH2B, RH3B, RH4B	SFA-202 [3]	SFA-302 [3]
	Leaf Spring (top latch)	RH1B, RH2B, RH3B, RH4B	SFA-101 [3]	SFA-301 [3]

2. Must use horseshoe clip when mounting in DIN mount socket. Replacement horseshoe clip part number is Y778-011.
3. Two required per relay.

AC Coil Ratings

Voltage (V)	Rated Current (mA) ±15% at 20°C								Coil Resistance (Ω) ±10% at 20°C				Operation Characteristics (against rated values at 20°C)		
	AC 50Hz				AC 60Hz										
	SPDT	DPDT	3PDT	4PDT	SPDT	DPDT	3PDT	4PDT	SPDT	DPDT	3PDT	4PDT	Max. Continuous Applied Voltage	Pickup Voltage	Dropout Voltage
6	170	240	330	387	150	200	280	330	330	9.4	6.4	5.4	110%	80% maximum	30% minimum
12	86	121	165	196	75	100	140	165	165	39.3	25.3	21.2			
24	42	60.5	81	98	37	50	70	83	83	153	103	84.5			
110	9.6	—	18.1	21.6	8.4	—	15.5	18.2	18.2	—	2,200	1,800			
110-120	—	9.4-10.8	—	—	—	8.0-9.2	—	—	—	—	—	—			
120	8.6	—	16.4	19.5	7.5	—	14.2	16.5	16.5	—	10,800	7,360			
220	4.7	—	8.8	10.7	4.1	—	7.7	9.1	9.1	—	10,800	7,360			
220-240	—	4.7-5.4	—	—	—	4.0-4.6	—		—	18,820	—	—			
240	4.9	—	8.2	9.8	4.3	—	7.1	8.3	8.3	—	12,100	9,120			

DC Coil Ratings

Voltage (V)	Rated Current (mA) ±15% at 20°C				Coil Resistance (Ω) ±10% at 20°C				Operation Characteristics (against rated values at 20°C)		
	SPDT	DPDT	3PDT	4PDT	SPDT	DPDT	3PDT	4PDT	Max. Continuous Applied Voltage	Pickup Voltage	Dropout Voltage
6	128	150	240	250	47	40	25	24	110%	80% maximum	10% minimum
12	64	75	120	125	188	160	100	96			
24	32	36.9	60	62	750	650	400	388			
48	18	18.5	30	31	2,660	2,600	1,600	1,550			
100-110	—	8.2-9.0	—	—	—	12,250	—	—			
110	8	—	12.8	15	13,800	—	8,600	7,340			

Standard coil voltages are in **BOLD**.

Contact Ratings

Model	Continuous Current	Maximum Contact Capacity: Allowable Contact Power		Maximum Contact Capacity: Rated Load		
		Resistive Load	Inductive Load	Voltage (V)	Res. Load	Ind. Load
SPDT	10A	1540VA 300W	990VA 210W	110 AC	10A	7A
				220 AC	7A	4.5A
				30 DC	10A	7A
DPDT 3PDT 4PDT	10A	1650VA 300W	1100VA 225W	110 AC	10A	7.5A
				220 AC	7.5A	5A
				30 DC	10A	7.5A

Note: Inductive load for the rated load — cos ø = 0.3, L/R = 7 ms

TÜV Ratings

Voltage	RH1	RH2	RH3	RH4
240V AC	10A	10A	7.5A	7.5A
30V DC	10A	10A	10A	10A

AC: cos ø = 1.0, DC: L/R = 0 ms

UL Ratings

Voltage	Resistive			General Use			Horsepower Rating		
	RH1 RH2	RH3	RH4	RH1 RH2	RH3	RH4	RH1 RH2	RH3	RH4
240V AC	10A	7.5A	7.5A	7A	6.5A	5A	1/3 HP	1/3 HP	—
120V AC	—	10A	10A	—	7.5A	7.5A	1/6 HP	1/6 HP	—
30V DC	10A	10A	—	7A	—	—	—	—	—
28V DC	—	—	10A	—	—	—	—	—	—

CSA Ratings

Voltage	Resistive				General Use				Horse-power Rating
	RH1	RH2	RH3	RH4	RH1	RH2	RH3	RH4	RH1, 2, 3
240V AC	10A	10A	—	7.5A	7A	7A	7A	5A	1/3 HP
120V AC	10A	10A	10A	10A	7.5A	7.5A	—	7.5A	1/6 HP
30V DC	10A	10A	10A	10A	7A	7.5A	—	—	—

Socket Specifications

	Sockets	Terminal	Electrical Rating	Wire Size	Torque
DIN Rail Mount Sockets	SH1B-05	(Coil) M3 screws (contact) M3.5 screws with captive wire clamp	250V, 10A	Maximum up to 2–#12AWG	5.5 - 9 in•lbs 9 - 11.5 in•lbs
	SH2B-05 SH3B-05 SH4B-05	M3.5 screws with captive wire clamp	300V, 10A	Maximum up to 2–#12AWG	9 - 11.5 in•lbs
Finger-safe DIN Rail Mount	SH1B-05C	(coil) M3 screws (contact) M3.5 screws with captive wire clamp, fingersafe	250V, 10A	Maximum up to 2–#12AWG	5.5 - 9 in•lbs 9 - 11.5 in•lbs
	SH2B-05C SH3B-05C SH4B-05C	M3.5 screws with captive wire clamp, fingersafe	300V, 10A	Maximum up to 2–#12AWG	9 - 11.5 in•lbs
Through Panel Mount Socket	SH1B-51 SH2B-51 SH3B-51 SH4B-51	Solder	300V, 10A	—	—
PCB Mount Socket	SH1B-62	PCB mount	250V, 10A	—	—
	SH2B-62 SH3B-62 SH4B-62	PCB mount	300V, 10A	—	—

Accessories

Item	Appearance	Use with	Part No.	Remarks
Aluminum DIN Rail (1 meter length)		All DIN rail sockets	BNDN1000	The BNDN1000 is designed to accommodate DIN mount sockets. Made of durable extruded aluminum, the BNDN1000 measures 0.413 (10.5mm) in height and 1.37 (35mm) in width (DIN standard). Standard length is 39" (1,000mm).
DIN Rail End Stop		DIN rail	BNL5	9.1 mm wide.
Replacement Hold-Down Spring Anchor		DIN mount sockets and hold down springs.	Y778-011	For use on DIN rail mount socket when using pullover wire hold down spring. 2 pieces included with each socket.

Specifications

Contact Material		Silver cadmium oxide
Contact Resistance [1]		50mΩ maximum
Minimum Applicable Load		24V DC, 30 mA; 5V DC, 100 mA (reference value)
Operating Time [2]	SPDT DPDT	20ms maximum
	3PDT 4PDT	25ms maximum
Release Time [2]	SPDT DPDT	20ms maximum
	3PDT 4PDT	25ms maximum
Power Consumption (approx.)	SPDT	AC: 1.1VA (50Hz), 1VA (60Hz) DC: 0.8W
	DPDT	AC: 1.4VA (50Hz), 1.2VA (60Hz) DC: 0.9W
	3PDT	AC: 2VA (50Hz), 1.7VA (60Hz) DC: 1.5W
	4PDT	AC: 2.5VA (50Hz), 2VA (60Hz) DC: 1.5W
Insulation Resistance		100MΩ minimum (500V DC megger)
Dielectric Strength [3]	SPDT	Between live and dead parts: 2,000V AC, 1 minute Between contact and coil: 2,000V AC, 1 minute Between contacts of the same pole: 1,000V AC, 1 minute
	DPDT 3PDT 4PDT	Between live and dead parts: 2,000V AC, 1 minute Between contact and coil: 2,000V AC, 1 minute Between contacts of different poles: 2,000V AC, 1 minute Between contacts of the same pole: 1,000V AC, 1 minute
Operating Frequency		Electrical: 1,800 operations/hour maximum Mechanical: 18,000 operations/hour maximum
Vibration Resistance		Damage limits: 10 to 55Hz, amplitude 0.5 mm Operating extremes: 10 to 55Hz, amplitude 0.5 mm
Shock Resistance		Damage limits: 1,000m/s² (100G) Operating extremes: 200m/s² (20G - SPDT, DPDT) 100m/s² (10G - 3PDT, 4PDT)
Mechanical Life		50,000,000 operations minimum
Electrical Life	DPDT	500,000 operations minimum (120V AC, 10A)
	SPDT 3PDT 4PDT	200,000 operations minimum (120V AC, 10A)
Operating Temperature [4]	SPDT DPDT 3PDT 4PDT	–25 to +70°C (no freezing)
Operating Humidity		45 to 85% RH (no condensation)
Weight (approx.)		SPDT: 24g, DPDT: 37g, 3PDT: 50g, 4PDT: 74g

Note: Above values are initial values.
1. Measured using 5V DC, 1A voltage drop method
2. Measured at the rated voltage (at 20°C), excluding contact bouncing
   Release time of relays with diode: 40 ms maximum
3. Relays with indicator or diode: 1000V AC, 1 minute
4. For use under different temperature conditions, refer to Continuous Load Current vs. Operating Temperature Curve. The operating temperature range of relays with indicator or diode is –25 to +40°C.

Characteristics (Reference Data)

Electrical Life Curves

AC Load

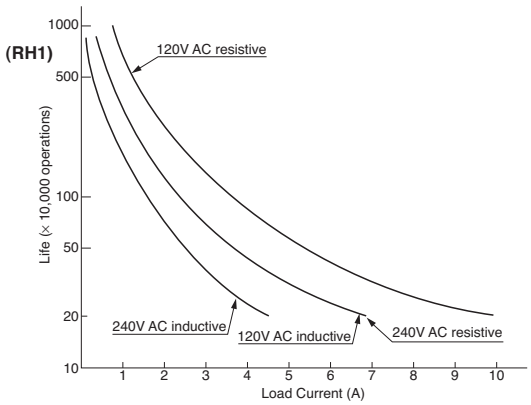

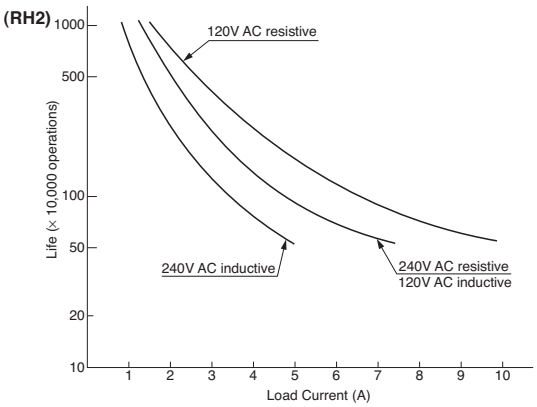

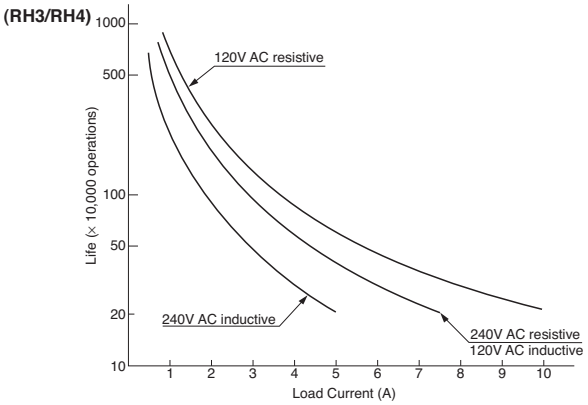

DC Load

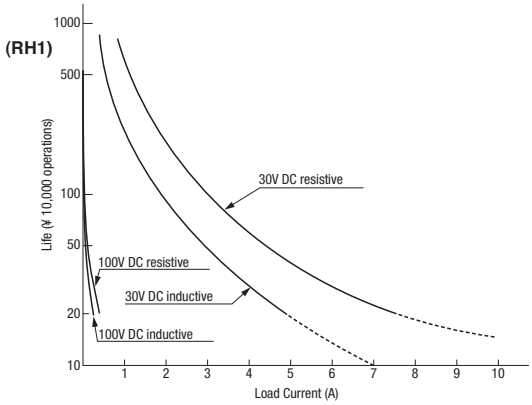

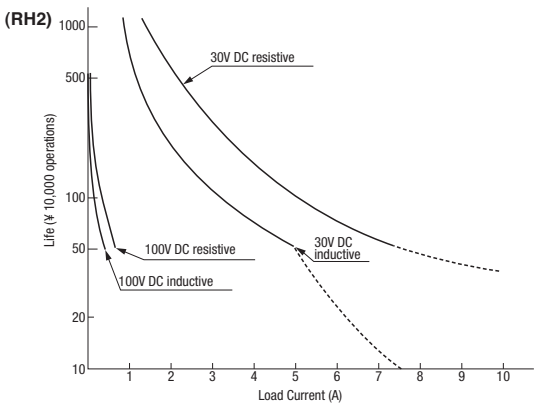

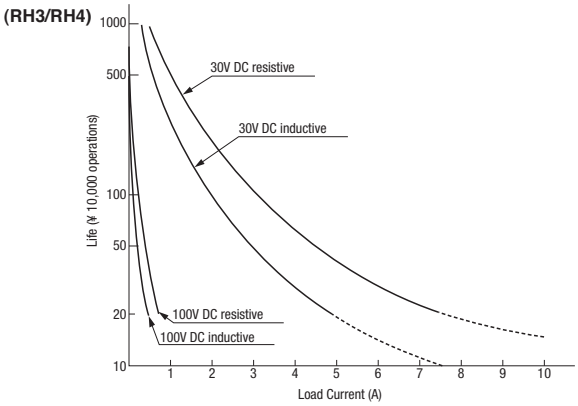

Maximum Switching Capacity

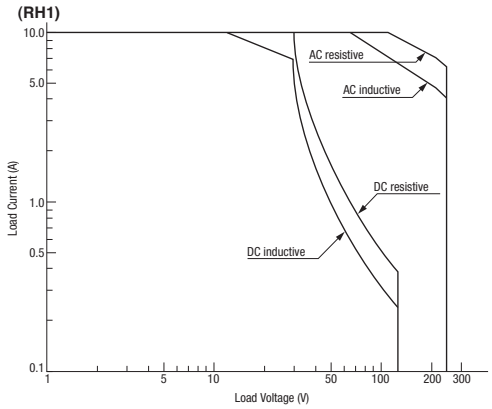

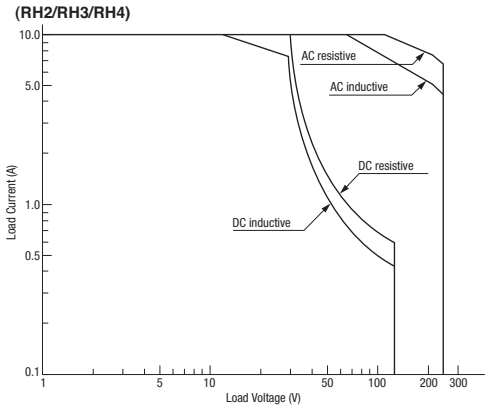

Continuous Load Current vs. Operating Temperature Curve (Basic Type, With Check Button, and Top Bracket Mounting Type)

(RH1)

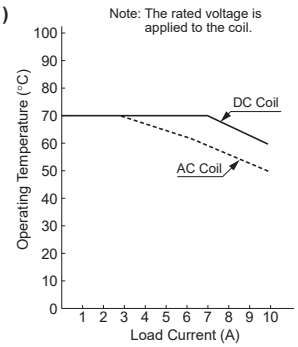

(RH2)

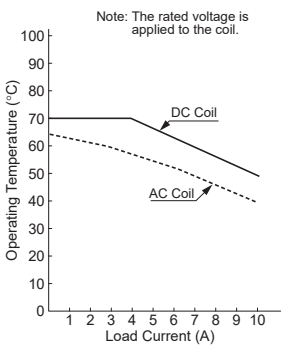

(RH3/RH4)

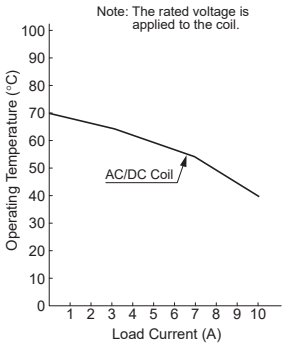

Internal Connection (View from Bottom)

Basic Type

SPDT

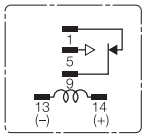

DPDT

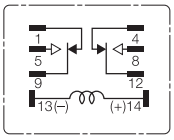

3PDT

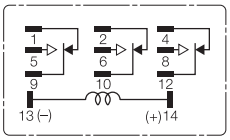

4PDT

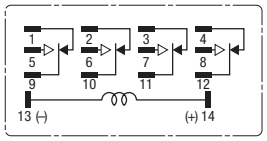

With Check Button

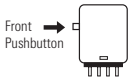

Contacts can be operated by pressing the check button.

With Indicator (-L type)

	SPDT	3PDT	4PDT		DPDT	
Below 100V AC/DC	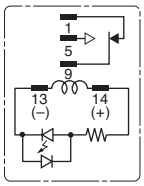	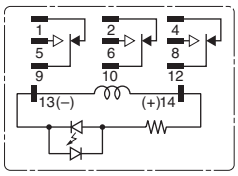	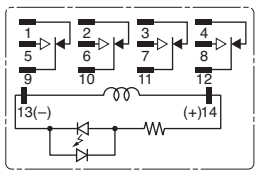	Below 24V AC/DC	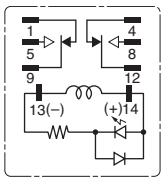	When the relay is energized, the indicator goes on. • Relay coils less than 100V DC do not contain a protection diode (except DPDT). • Relay coils below 100V use LED indicator, coils above 100V use neon lamp indicator. • LED color of DPDT model is green
100V AC/DC and over	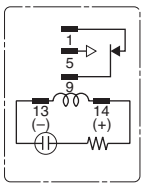	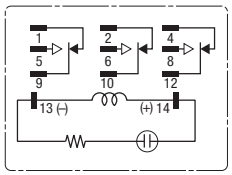	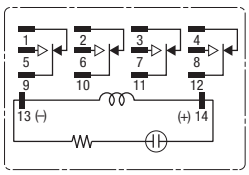	24V AC/DC and over	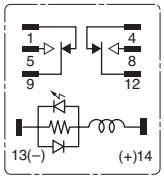	

With Diode (-D type)

SPDT

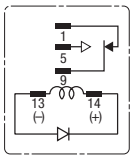

DPDT

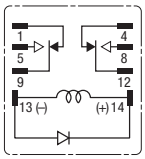

3PDT

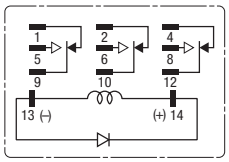

4PDT

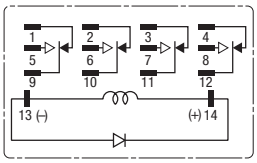

Contains a diode to absorb the back emf generated when the coil is de-energized. The release time is slightly longer. Available for DC coil only.

- Diode Characteristics
  Reverse withstand voltage: 1,000V
  Forward current: 1A

With Indicator LED & Diode (-LD type)

	SPDT	3PDT	4PDT		DPDT	
Below 100V DC	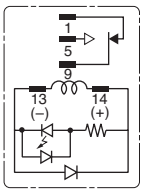	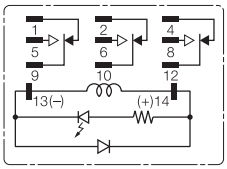	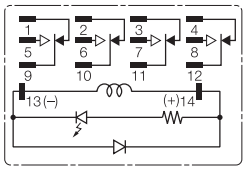	Below 24V AC/ DC	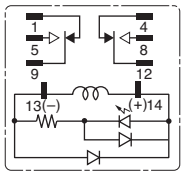	Contains an LED indicator and a surge absorber, and has the same height as the basic type. LED color of DPDT model is green.
100V DC and over	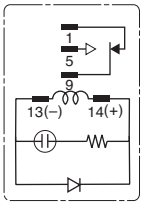	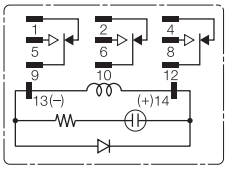	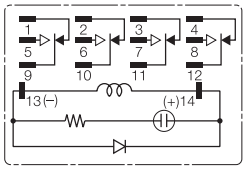	24V AC/ DC and over	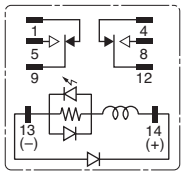	

Dimensions (mm)

RH1B-U/RH1B-UL/RH1B-UD/RH1B-ULD

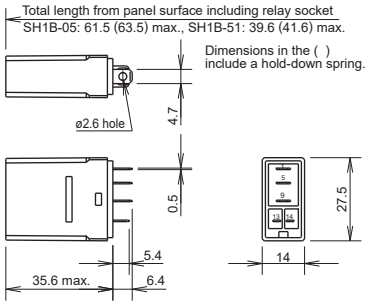

RH2B-U/RH2B-UL/RH2B-UD/RH2B-ULD

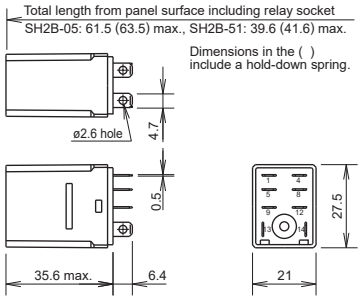

RH3B-U/RH3B-UL/RH3B-UD/RH3B-ULD

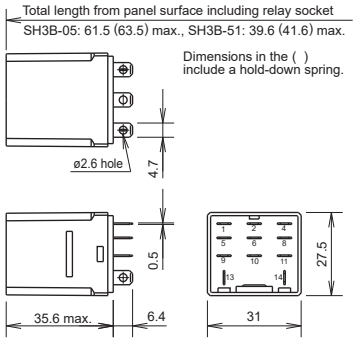

RH4B-U/RH4B-UL/RH4B-UD/RH4B-ULD

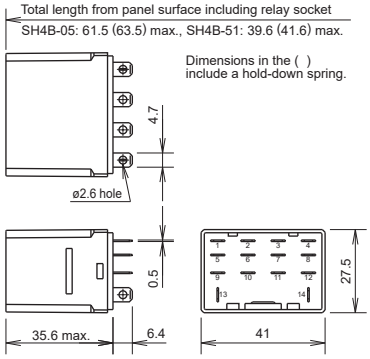

RH1B-UT

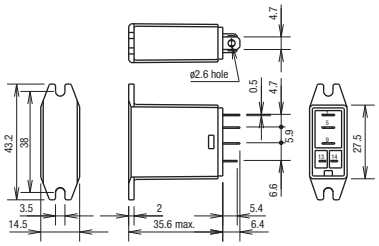

RH2B-UT

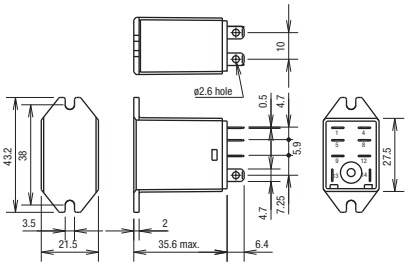

RH3B-UT

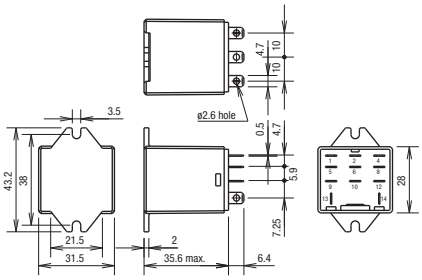

RH4B-UT

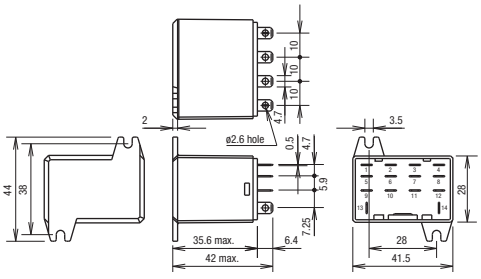

Dimensions con't (mm)

RH1V2-U/RH1V2-UD

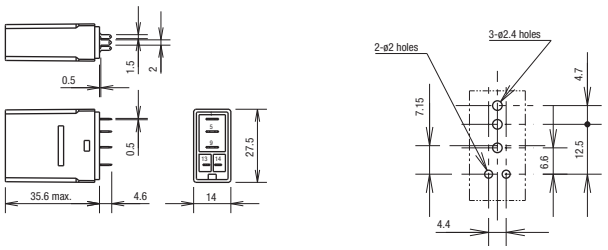

RH2V2-U/RH2V2-UL/RH2V2-UD

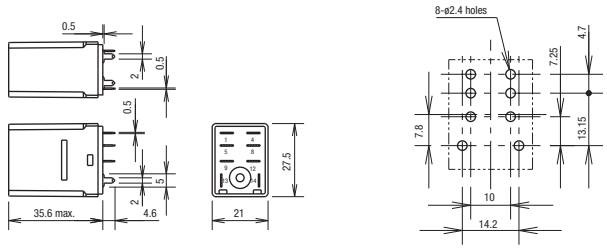

RH3V2-U/RH3V2-UL/RH3V2-D

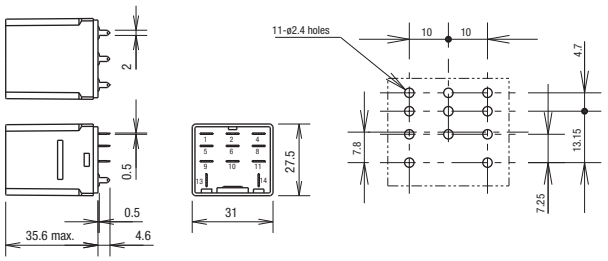

RH4V2-U/RH4V2-UL/RH4V2-UD

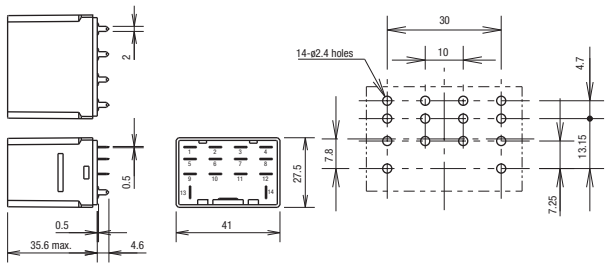

Standard DIN Rail Mount Sockets

SH1B-05

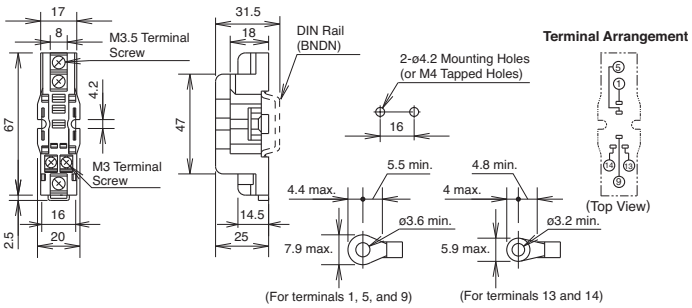

SH2B-05

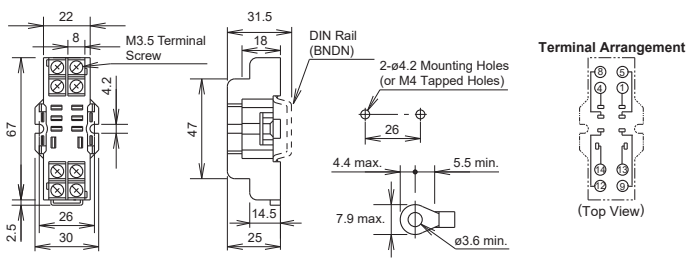

SH3B-05

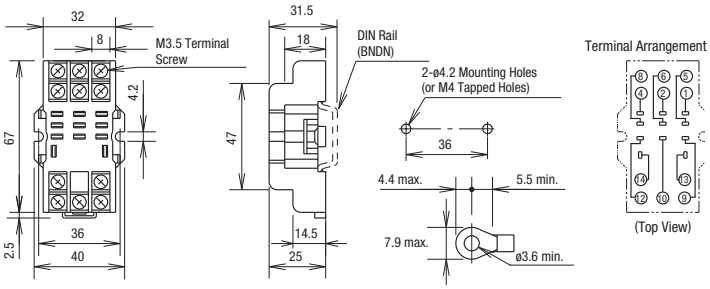

SH4B-05

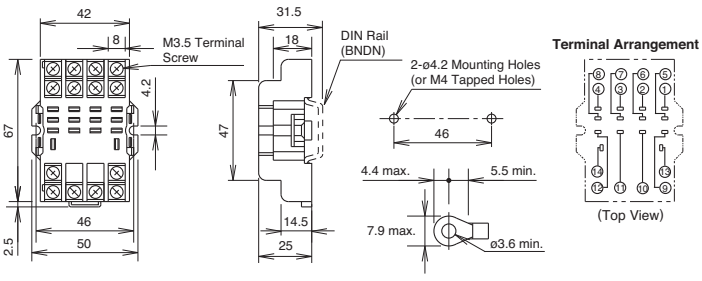

Dimensions con't (mm)

Finger-safe DIN Rail Mount Sockets

SH1B-05C

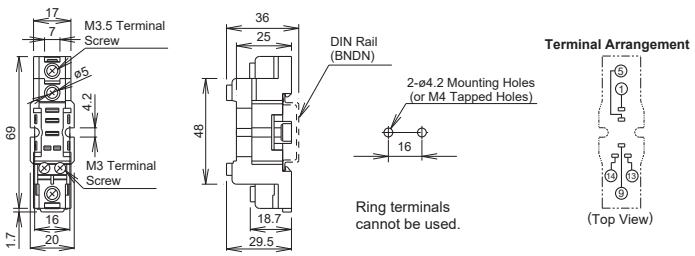

SH2B-05C

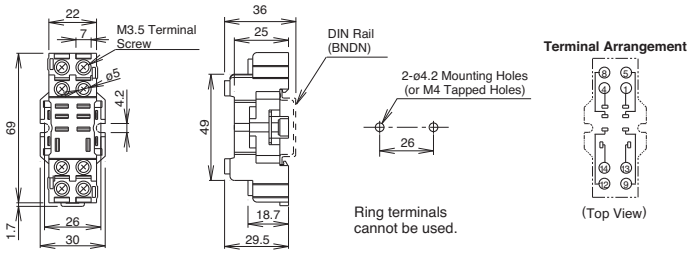

SH3B-05C

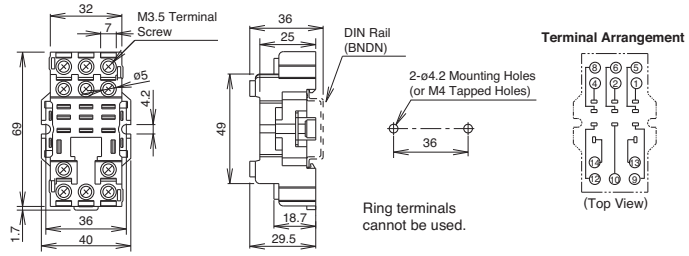

SH4B-05C

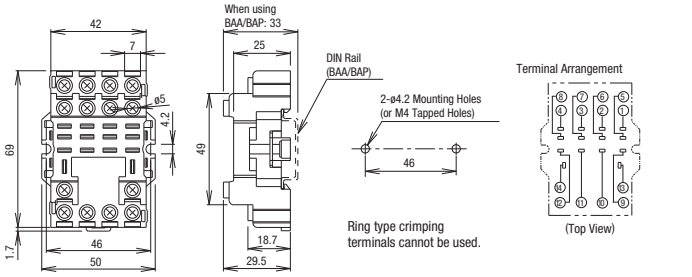

Through Panel Mount Socket

SH1B-51

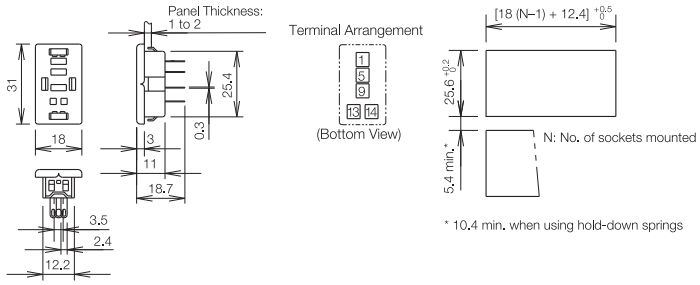

SH2B-51

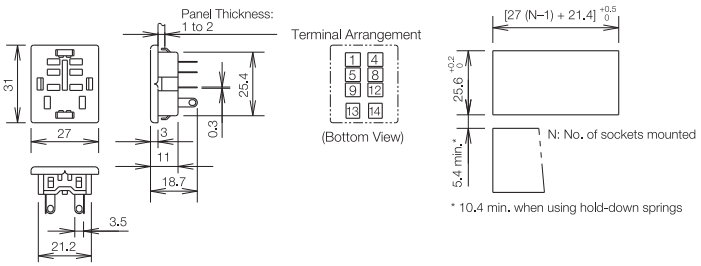

SH3B-51

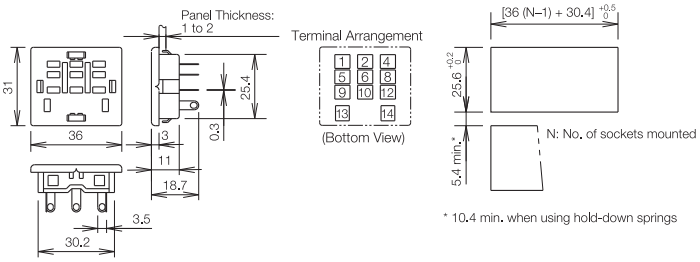

SH4B-51

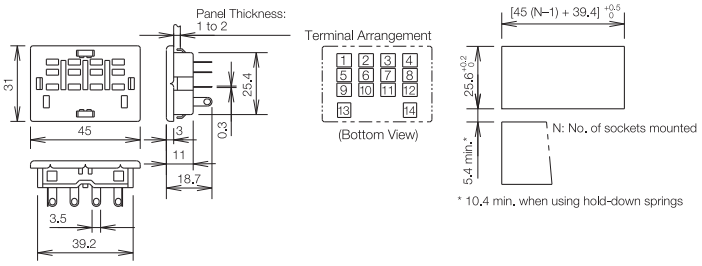

Dimensions con't (mm)

PCB Mount Sockets

SH1B-62

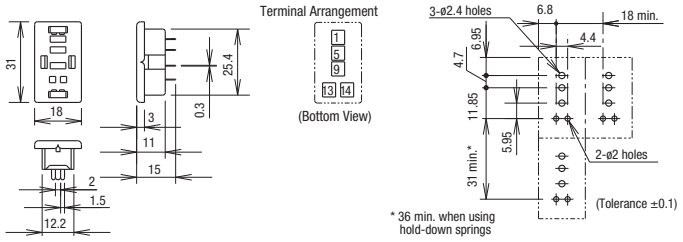

SH2B-62

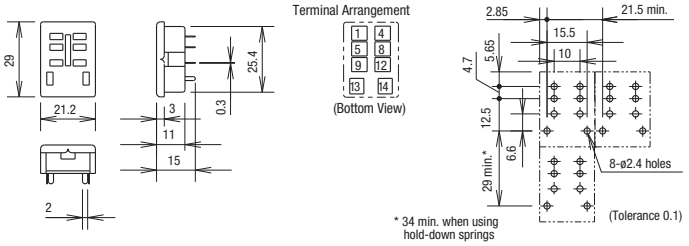

SH3B-62

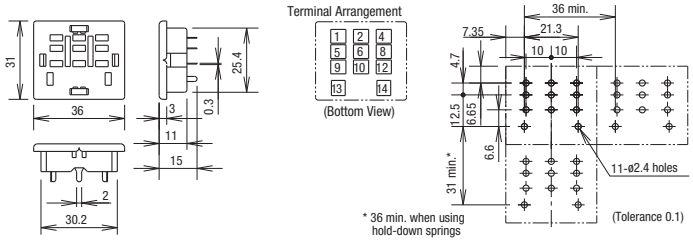

SH4B-62

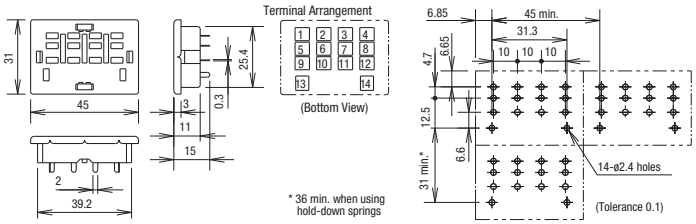

Operating Instructions

Driving Circuit for Relays

1. To ensure correct relay operation, apply rated voltage to the relay coil.
2. Input voltage for the DC coil:
   A complete DC voltage is best for the coil power to make sure of stable relay operation. When using a power supply containing a ripple voltage, suppress the ripple factor within 5%. When power is supplied through a rectification circuit, the relay operating characteristics, such as pickup voltage and dropout voltage, depend on the ripple factor. Connect a smoothing capacitor for better operating characteristics as shown below.

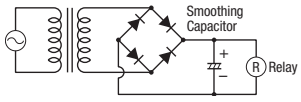

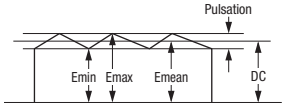

$$\text{Ripple Factor (\%)} = \frac{\text{Emax} - \text{Emin}}{\text{Emean}} \times 100\%$$

Emax = Maximum of pulsating current
Emin = Minimum of pulsating current
Emean = DC mean value

3. Leakage current while relay is off:
   When driving an element at the same time as the relay operation, special consideration is needed for the circuit design. As shown in the incorrect circuit below, leakage current (Io) flows through the relay coil while the relay is off. Leakage current causes coil release failure or adversely affects the vibration resistance and shock resistance. Design a circuit as shown in the correct example.

Incorrect

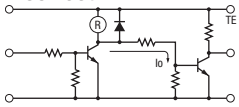

Correct

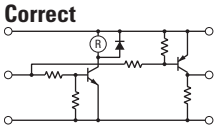

4. Surge suppression for transistor driving circuits:
   When the relay coil is turned off, a high-voltage pulse is generated, causing a transistor to deteriorate and sometimes to break. Be sure to connect a diode to suppress the back electromotive force. Then, the coil release time becomes slightly longer. To shorten the coil release time, connect a Zener diode between the collector and emitter of the transistor. Select a Zener diode with a Zener voltage slightly higher than the power voltage.

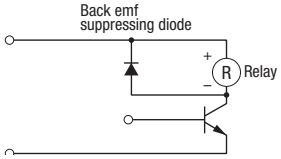

Protection for Relay Contacts

1. The contact ratings show maximum values. Make sure that these values are not exceeded. When an inrush current flows through the load, the contact may become welded. If this is the case, connect a contact protection circuit, such as a current limiting resistor.
2. Contact protection circuit:
   When switching an inductive load, arcing causes carbides to form on the contacts, resulting in increased contact resistance. In consideration of contact reliability, contact life, and noise suppression, use of a surge absorbing circuit is recommended. Note that the release time of the load becomes slightly longer. Check the operation using the actual load. Incorrect use of a contact protection circuit will adversely affect switching characteristics. Four typical examples of contact protection circuits are shown in the following table:

RC	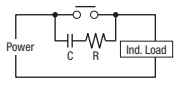	This protection circuit can be used when the load impedance is smaller than the RC impedance in an AC load power circuit. • R: Resistor of approximately the same resistance value as the load • C:0.1 to 1 µF
	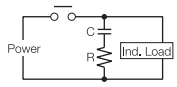	This protection circuit can be used for both AC and DC load power circuits. R: Resistor of approximately the same resistance value as the load C: 0.1 to 1 µF
Diode	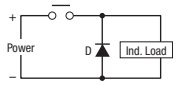	This protection circuit can be used for DC load power circuits. Use a diode with the following ratings. Reverse withstand voltage: Power voltage of the load circuit x 10 Forward current: More than the load current
Varistor	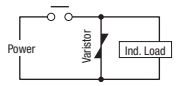	This protection circuit can be used for both AC and DC load power circuits. For a best result, when using a power voltage of 24 to 48V AC/DC, connect a varistor across the load. When using a power voltage of 100 to 240V AC/DC, connect a varistor across the contacts.

3. Do not use a contact protection circuit as shown below:

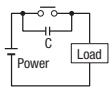	This protection circuit is very effective in arc suppression when opening the contacts. But, the capacitor is charged while the contacts are opened. When the contacts are closed, the capacitor is discharged through the contacts, increasing the possibility of contact welding.
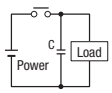	This protection circuit is very effective in arc suppression when opening the contacts. But, when the contacts are closed, a current flows to charge the capacitor, causing contact welding.

Generally, switching a DC inductive load is more difficult than switching a DC resistive load. Using an appropriate arc suppressor, however, will improve the switching characteristics of a DC inductive load.

Soldering

1. When soldering the relay terminals, use a soldering iron of 30 to 60W, and quickly complete soldering (within approximately 3 seconds).
2. Use a non-corrosive rosin flux.

Operating Instructions con't

Other Precautions

1. General notice:
   To maintain the initial characteristics, do not drop or shock the relay.

   The relay cover cannot be removed from the base during normal operation. To maintain the initial characteristics, do not remove the relay cover.

   Use the relay in environments free from condensation, dust, sulfur dioxide (SO_2), and hydrogen sulfide (H_2S).

   Make sure that the coil voltage does not exceed applicable coil voltage range.

2. UL and CSA ratings may differ from product rated values determined by IDEC.

3. Do not use relays in the vicinity of strong magnetic field, as this may affect relay operation.

Safety Precautions

- Turn off the power to the relay before starting installation, removal, wiring, maintenance, and inspection of the relays. Failure to turn power off may cause electrical shock or fire hazard.
- Observe specifications and rated values, otherwise electrical shock or fire hazard may be caused.
- Use wires of the proper size to meet voltage and current requirements. Tighten the terminal screws on the relay socket to the proper tightening torque.
- Surge absorbing elements on AC relays with RC or DC relays with diode are provided to absorb the back electromotive force generated by the coil. When the relay is subject to an excessive external surge voltage, the surge absorbing element may be damaged. Add another surge absorbing provision to the relay to prevent damage.

Precautions for the RU Relays

- Before operating the latching lever of the RU relay, turn off the power to the RU relay. After checking the circuit, return the latching lever to the original position.
- Do not use the latching lever as a switch. The durability of the latching lever is a minimum of 100 operations.
- When using DC loads on 4PDT relays, apply a positive voltage to terminals of neighboring poles and a negative voltage to the other terminals of neighboring poles to prevent the possibility of short circuits.
- DC relays with a diode have a polarity in the coil terminals. Apply the DC voltage to the correct terminals.

GREYSTONE
ENERGY SYSTEMS INC

THERMOWELLS
T1 Series

HWS, WSRS, DHWS: BOILER ENTERING & LEAVING WATER TEMP, SUPPLY, RETURN WATER TEMP THEMRMOWELL

The T1 series thermowell are available in 304 series, 316 series stainless steel or high strength Delrin®. They are available in a wide range of lengths. Custom lengths and materials are also available.



SPECIFICATION:

Material	**P -** 304 Series stainless steel **R -** 316 Series stainless steel **D -** Delrin®: High strength, corrosion resistant polymer
Length	2", 4", 6", 8", 12" & 18" Standard Custom lengths available
Thread size	External - 1/2" NPT Internal - 1/2" NPSM
Construction	2"-18" - Machined Construction 12" up - S/S Welded Construction optional (for use with inert fluids only)

PART NUMBER SELECTED

PRODUCT SELECTION INFORMATION:

MODEL	Product Description
T1	Thermowell Series

CODE	External Thread Size
1/2	1/2" NPT

CODE	Material
P	304 Series Stainless Steel
R	316 Series Stainless Steel
D	High Strength Delrin®

CODE	Length
2	2" (50 mm)
4	4" (100 mm)
6	6" (150 mm)
8	8" (200 mm)
12	12" (300 mm)
18	18" (450 mm)

CODE	Options
W	Welded Contruction (12" up only)

TYPICAL INSTALLATION:

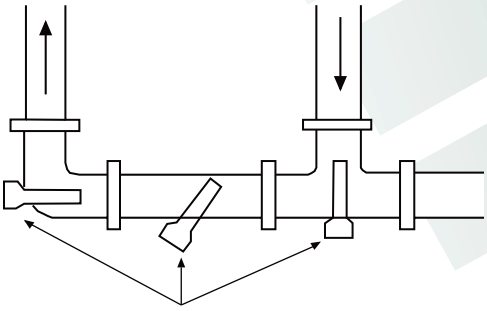

Thermowell placement in pipe

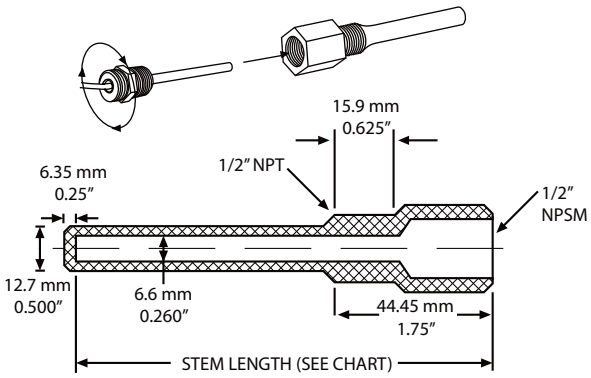

Greystone Energy Systems, Inc. reserves the right to make design modifications without prior notice.
Also available in additional materials and stem lengths. Please contact Greystone.

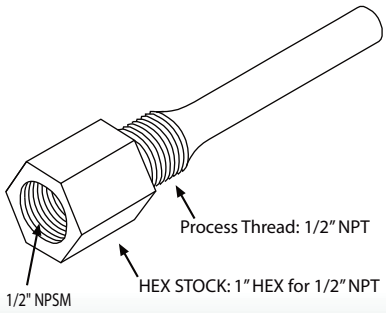

NOTE:

6" and up machined thermowells have a two step stem as shown Welded construction have a 0.375" (9.5 mm) diameter

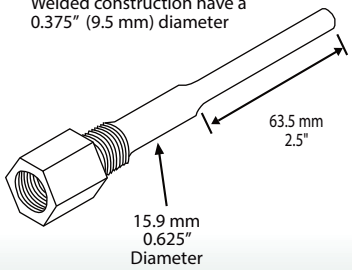

GREYSTONE
ENERGY SYSTEMS INC

Greystone Energy Systems, Inc.
150 English Drive, Moncton,
New Brunswick, Canada E1E 4G7

(506) 853-3057 Fax: (506) 853-6014
North America: 1-800-561-5611
e-mail: mail@greystoneenergy.com
www.greystoneenergy.com

RoHS COMPLIANT

Copyright © Greystone Energy Systems Inc. All Rights Reserved

08/15 T1-SPE-001 PRINTED IN CANADA

AHU-2: BUILDING STATIC PRESS PROBES & SENSOR

AIR PRESSURE SENSORS, SURGE DAMPENERS

A300 SERIES, RPS, SD-01, 21121, 60681

DESCRIPTION

Static Pressure Sensors
The **A-300-K Series** sensors are used with pressure transmitters and pressure switches to sense duct pressures. Two sensors are required to monitor pressure across coils, filters, blowers, etc. **A-301-K** and **A-302-K** have four radial sensing holes and 4" (10.2 cm) insertion depth. The **A-308-K** should be used only where accuracy is not critical. All mount in a 3/8" hole in the duct. If the interior of the duct is not accessible, an optional **A-345-K** flange mounting kit may be used.

Room Static Pressure or Total Pressure Sensor Kit
The versatile **Model 60681** Pressure Sensing Kit is used for monitoring static pressure (aspiration) or total pressure (impact). The kit includes a 7" (17.8 cm) universal sensing probe, adjustable mounting flange, 1/4" adapter, and 3' (0.9 m) length of tubing (1/4" ID x 3/8" OD). For total (impact) pressure applications, install the curved tip opening facing into the air stream or away from the air stream for vacuum applications.

Total Pressure Sensor
The **Model 21122 (4")** and **21123 (8")** sensors are used primarily for proving air flow in ducts. The opening in the tip of the 4" (10.2 cm) aluminum tube faces upstream and senses impact (total) pressure. The "-112" models accept 1/8" to 1/4" ID flexible tubing.

Outdoor Static Pressure Sensor
The **A-306-K** Outdoor Static Pressure Sensor provides an outdoor pressure signal for reference in building pressurization applications. The **A-306-K** includes the sensor, 50' (15.24m) of vinyl tubing, mounting bracket, and hardware.

Room Static Pressure Sensor
The **Model RPS** is a stainless steel, wall-mounted room static pressure sensor. It mounts directly to the wall or to a standard electrical box. The **Model RPS-W** is a white plastic, wall-mounted room static pressure sensor, and the **Model RPS-I** is ivory. The RPS sensors have a 100 micron stainless steel breather vent.

Filter Kit
The Model **A-605** Filter Kit includes an aluminum surface mounting bracket and screws, two 5 ft lengths of 1/4" aluminum tubing, two static pressure tips, and two plastic vent valves.

Surge Dampener
Surge Dampener **Model SD-01** absorbs rapid pressure fluctuations to provide steady pressure outputs. The dampener has two independent channels - one for the low pressure tubing and one for the high pressure tubing. Surge dampeners are typically used with outdoor pressure sensors, which are subject to wind gusts, and isolation rooms, clean rooms, or operating rooms where opening or closing doors creates sudden pressure changes.



RPS-W



60681



A-300 Series



RPS & SD-01

APPLICATION

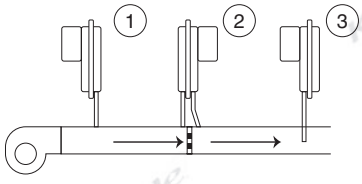

1. Positive static pressure increases as the filter gets dirty.
2. Differential across filter changes as filter gets dirty.
3. Flow is reduced as filter gets dirty.



4. Negative pressure increases as the filter gets dirty.
5. Fan operation and true air flow: varying amounts of static pressure. Probes must be perpendicular to air flow.

ORDERING INFORMATION

MODEL	DESCRIPTION
60681	Static or total pressure sensing kit
A-301-K	Duct static pressure tip, 1/4" compression
A-302-K	Duct static pressure tip, 1/4" barb
A-308-K	Duct static pressure fitting, 1/4" barb
A-345-K	Flange mounting kit (1 required for each A-301-K or A-302-K)
A-3145K	A-301-K duct static pressure tip, 1/4" compression with A-345-K mounting flange
A-3245K	A-302-K duct static pressure tip, 1/4" barb with A-345-K mounting flange
A-3845K	A-308-K duct static pressure fitting, 1/4" barb with A-345-K mounting flange
21122	4" aluminum impact tube, 1/4" OD connection
21122-112	6" aluminum impact tube for 1/8" thru 1/4" ID flexible plastic tubing
21123	8" aluminum impact tube, 1/4" OD connection
21123-112	8" aluminum impact tube for 1/8" thru 1/4" ID flexible plastic tubing
A-306-K	Outdoor air static pressure kit
A-605	Mounting kit for air filter application. Includes aluminum surface mounting brackets with screws, two 5 ft. lengths of 1/4" aluminum tubing, two static pressure tips and two plastic vent valves.
RPS	Stainless steel room pressure sensor, 1/4" barb
RPS-I	Ivory plastic room pressure sensor, 1/4" barb
RPS-W	White plastic room pressure sensor, 1/4" barb
SD-01	Surge dampener
B-137	1/4" barb adapter for #21122 and #21123 (standard pack-50)

BELIMO

ZS-260 Explosion-proof Housing

For GM…, AM…, SM…, AF…, NF…, LF… Actuators

AHU-3: HOUSING FOR HEAT REC FAVE & BYPASS DAMPER ACTUATORS, REHEAT VALVE ACTUATORS



Application

The ZS-260 explosion-proof housing may be used with the GM…, AM…, SM…, AF…, NF…, LF… series actuators. This housing is not designed for direct coupling. UL and CSA; Class I, Division 1&2, Groups B, C, D, (NEMA 7), Class II, Division 1&2, Groups E, F and G, (NEMA 9), Class III, Hazardous (classified) Locations, outdoor application NEMA 4.

Operation

The ZS-260 enclosure is designed so that the required actuator may be easily field mounted into the enclosure. The actuator is fastened on to the internal portion of the operating shaft and secured at the end with an anti-rotation strap. A crankarm, such as the KH8, is mounted to the external portion of the operating shaft for connection to connection to the damper linkage. ZG-109 right angle, and ZG-110 standoff mounting brackets may be used (see back).

The ZS-260 is designed so that the operating shaft can be mounted on either the front or rear side of the housing.

Accessories

KH8	Universal crankarm
KG8	Universal ball joint
KG10	Universal ball joint
ZG-109	Right angle mounting bracket
ZG-110	Stand-off mounting bracket

Technical Data	ZS-260
Material	Housing: cast, copper-free, aluminum, Cover bolts: stainless steel Operating shaft: stainless steel
Conduit holes	3/4"–14 NPT (2 supplied) see Note 1
Operating shaft diameter	1/2 inch [12.7]
Operating shaft location	Front or rear side of housing (Field selected)
Approved applications	UL and CSA; Class I, Division 1&2, Groups B, C, D, (NEMA 7), Class II, Division 1&2, Groups E, F and G, (NEMA 9), Class III, Hazardous (classified) Locations, outdoor application NEMA 4.
Weight	31.0 lb. (14.0 kg) without actuator

Note 1: Fittings that meet the requirements of the hazardous location must be used. All applications must comply with applicable local and/or national electric code.

Note: Since conditions of use of this product are outside the control of Belimo, the purchaser should determine suitability of the product for their intended use, and assumes all risk and liability in connection therewith.

Dimensions [All numbers in brackets are in millimeters.]

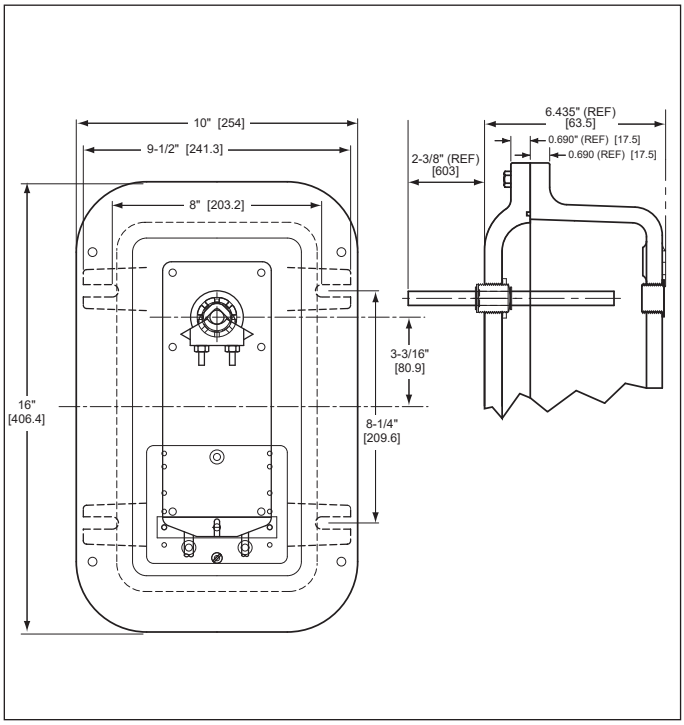

ZS-260 Explosion-proof Housing

For GM…, AM…, SM…, AF…, NF…, LF… Actuators

ZS-260 Shaft Thru Front

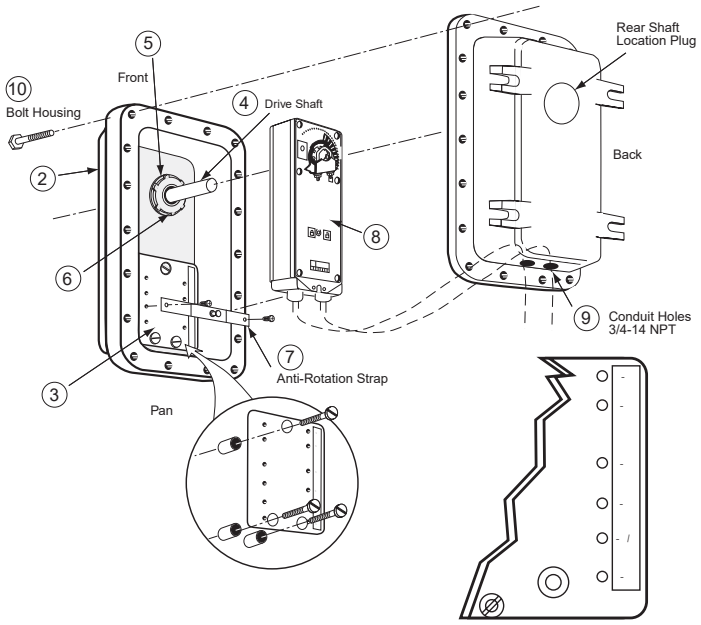

ZS-260 Mounting Instructions

1. Determine proper operating shaft location.
2. Remove threaded plug from the hole in which the operating shaft will be mounted.
3. Install the anti-rotation strap, mounting plate, to the side of the housing where the operating shaft will be mounted.
4. From the inside surface of the housing, insert the operating shaft, short length first, into the mounting hole.
5. Hand tighten the shaft bushing into the housing until the star nut/seal is in contact with the face of the housing.
6. Using a screw driver blade, drive the star nut/seal clockwise until the bushing is locked into place.
7. Install the anti-rotation strap into the mounting plate at the designated holes for the actuator to be used.
8. Install actuator
9. Wire actuator (per electrical code).
10. Bolt housing together

Typical ZG-109 Mounting

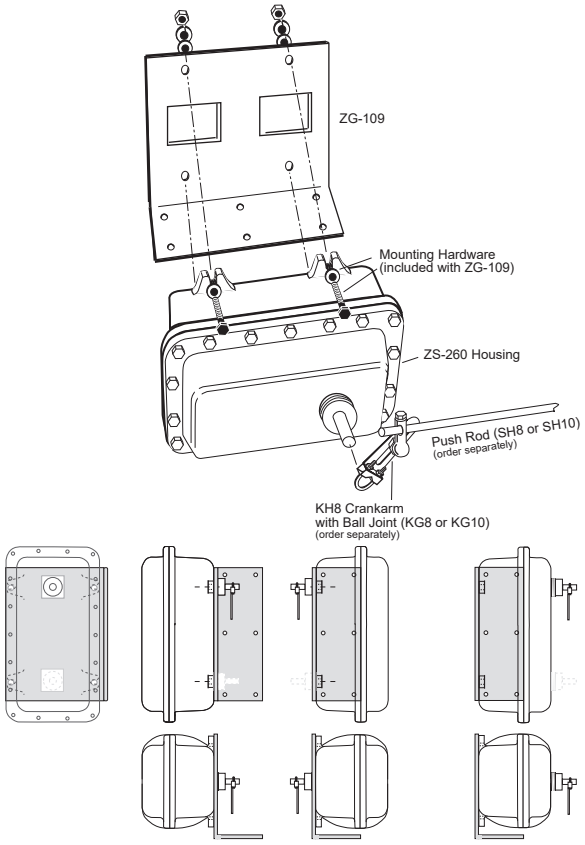

Typical ZG-110 Mounting

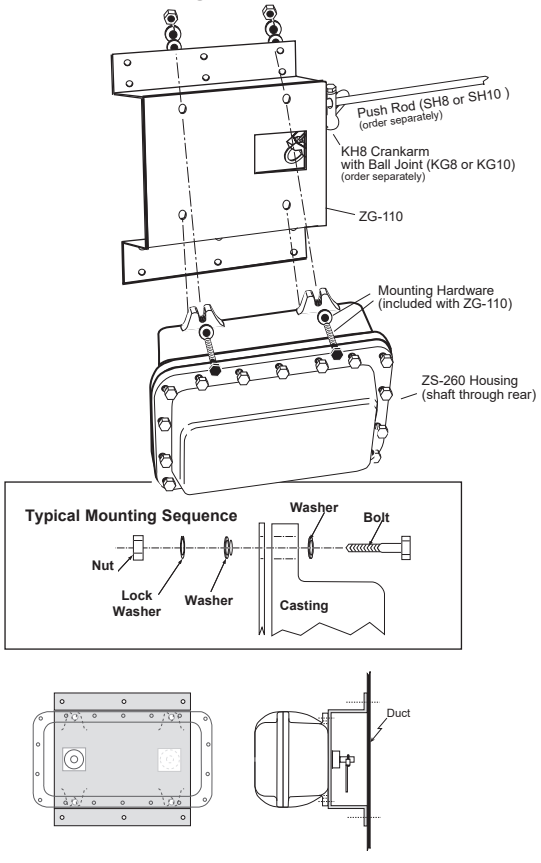

ASHCROFT INTRINSICALLY SAFE DIFFERENTIAL PRESSURE TRANSMITTER

IXLDP

AHU-3: PREFILTER, RA FILTER DP, BUILDING STATIC PRESS SENSOR

ASHCROFT

DESCRIPTION

The **Ashcroft Model IXLdp** (XFM option) is an **intrinsically safe**, **industrial-quality**, **differential pressure transmitter** for use on air and other noncorrosive gases. The **Model IXLdp** is available with accuracies of 0.25% and 0.50% in pressure ranges of 0.1 "W.C. to 200 "W.C. uni-directional or bi-directional.



IXLdp

MADE IN USA

FM APPROVED

FEATURES

- ***100 psig static line pressure***
- ***0.25% or 0.5% accuracy down to 0.05 "W.C."***
- ***Uni-directional or bidirectional ranges***
- ***300 Series cast stainless steel body***
- ***NEMA 4X***
- ***NIST certificate included***

SPECIFICATIONS

Supply Voltage	12-36 VDC	**Operating Temperature**	-20° to 185°F (-29° to 85°C)
Accuracy	0.25% or 0.5%	**Conduit Connection**	Two 1/2" female
Signal Output	4-20 mA @ 545Ω	**Process Connection**	Two 1/4" NPT female
Area	Intrinsically Safe Class I, II, III;Div 1 and 2, Groups A through G Non-incendive Class I, Div 2, Groups A through D; Class II, Div 2, Groups F, G, Class III	**Enclosure Rating**	NEMA 4X
		Static Pressure	100 psig max.
		Media	Clean, dry, noncorrosive gas
		Proof Pressure	20 psid
		Burst pressure	50 psid
Enitiy Parameters	Vmax=30V, Imax=100mA, Po=1 W, Ci=50nf, Li=0μh	**Weight**	2 lb (0.9 Kg)
		Approvals	FM - US only
Response Time	250 ms	**Warranty**	1 year

DIMENSIONS

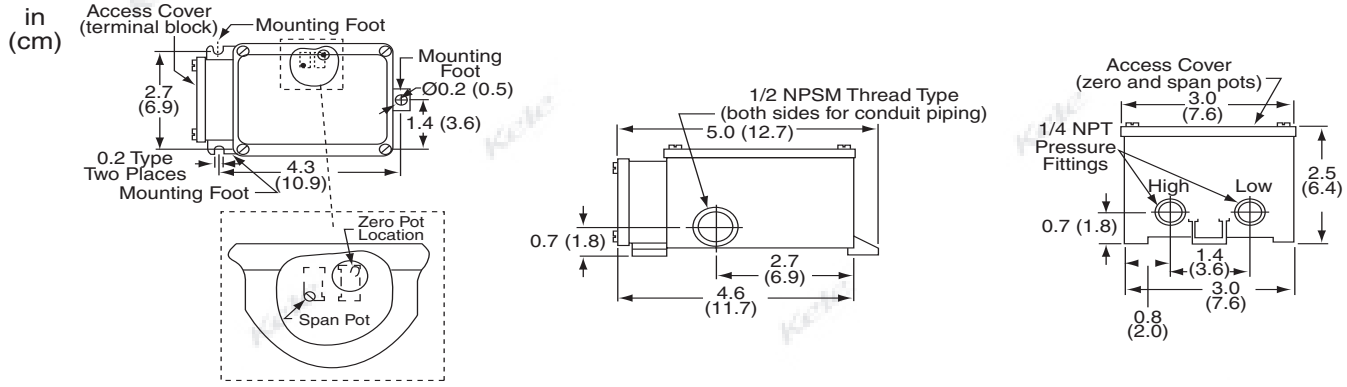

INSTALLATION

The transducer should be used with clean, dry air or other dry, noncorrosive gases. The unit should be mounted with #8 or #10 screws using the three mounting feet provided. The transducer can be mounted in any orientation with virtually no effect on calibration. Any minor zero pressure offsets that are encountered can be adjusted using the zero-adjust potentiometer. The high- and low-pressure connection ports are plugged to avoid debris entering the unit. The plugs should be left in place until the tubing and fittings are connected. The two 1/4" NPT pressure connections should be sealed to the transducer housing using Teflon® tape. Do not use dope-type sealant.

ASHCROFT INTRINSICALLY SAFE DIFFERENTIAL PRESSURE TRANSMITTER

IXLDP

CAUTION: Intrinsically safe devices require the use of an intrinsic safety barrier when applied in hazardous locations. Provide wiring and grounding strictly in accordance with manufacturer's instructions. When the Model IXLdp transmitter is combined with the Model MTL7706+ intrinsic safety barrier, total cable capacitance between the two must be limited to 0.12 µF, and total cable inductance must be limited to 4.0 mH (equivalent to 2700'/823m maximum Belden® #8760 18/2 shielded twisted pair cable 0.18 µH/FT, 44 pF/FT).

WIRING

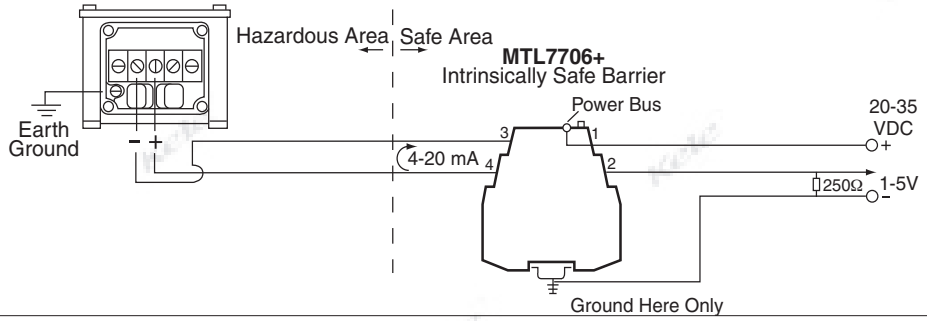

ORDERING INFORMATION

MODEL	DESCRIPTION
IX	Differential pressure transmitter
	ACCURACY
3	0.25% accuracy
5	0.5% accuracy
	PRESSURE CONNECTION
F	1/4" NPT female pressure connection
	OUTPUT SIGNAL
4	4-20 mA output signal
	ELECTRICAL CONNECTION
S	Screw terminals
	PRESSURE RANGE

Differential or Gauge		Compound	
P1IW	0.10" W.C. (24.9 Pa)	P05IWL	±0.05" W.C. (12.4 Pa)
P25IW	0.25" W.C. (62.24 Pa)	P1IWL	±0.10" W.C. (24.9 Pa)
P5IW	0.50" W.C. (124.6 Pa)	P2IWL	±0.20" W.C. (49.8 Pa)
1IW	1.00" W.C. (249.1 Pa)	P25IWL	±0.25" W.C. (62.24 Pa)
2IW	2.00" W.C. (498.2 Pa)	P5IWL	±0.50" W.C. (124.6 Pa)
2P5IW	2.50" W.C. (622.4 Pa)	1IWL	±1.00" W.C. (249.1 Pa)
3IW	3.00" W.C. (747.3 Pa)	2IWL	±2.00" W.C. (498.2 Pa)
5IW	5.00" W.C. (1245.5 Pa)	2P5IWL	±2.50" W.C. (622.4 Pa)
10IW	10.00" W.C. (2491.0 Pa)	3IWL	±3.00" W.C. (747.3 Pa)
15IW	15.00" W.C. (3734.5 Pa)	5IWL	±5.00" W.C. (1245.5 Pa)
20IW	20.00" W.C. (4979.3 Pa)	10IWL	±10.00" W.C. (2491.0 Pa)
25IW	25.00" W.C. (6224.1 Pa)	15IWL	±15.00" W.C. (3734.5 Pa)
50IW	50.00" W.C. (12.4 kPa)	20IWL	±20.00" W.C. (4979.3 Pa)
100IW	100.00" W.C. (24.9 kPa)	25IWL	±25.00" W.C. (6224.1 Pa)
150IW	150.00" W.C. (37.3 kPa)	50IWL	±50.00" W.C. (12.4 kPa)
200IW	200.00" W.C. (49.8 kPa)	100IWL	±100.00" W.C. (24.9 kPa)

OPTIONS	
XFM	Factory mutual approval (required for intrinsically safe)

IX | 3 | FO2 | 42 | ST | 10IW | XFM

Example: **IX3FO242ST10IWXFMX41** Intrinsically safe differential pressure transducer with 0.25% accuracy, 4-20 mA output, and 10" W.C. range.

RELATED PRODUCTS

250R-3-1	250 OHM 3 WATT 1% Resistor Long Leads
A-602	Mounting kit for air filter applications. Includes two pressure tips, two 5-foot lengths of aluminum tubing and two adapters.
DCP-1.5-W	Power supply, 24 VAC IN to 24 VDC OUT
MTL7706+	Intrinsic safety barrier, 4-20 mA two-wire transmitters

Series TTE Explosion-Proof RTD Temperature Transmitter

Installation and Operation Instructions

AHU-3: DA SUCT TEMP,HEAT REC EA, SA DUCT TEMP, RA DUCT TEMP



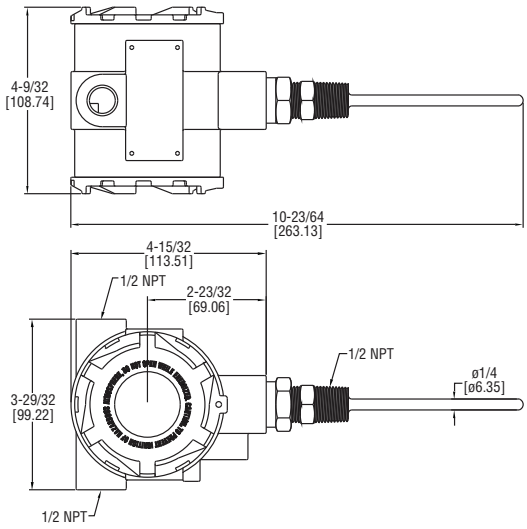

The Series TTE Explosion-Proof RTD Temperature Transmitter is the ideal product for hazardous temperature measurement applications. The TTE series has seven pre-programmed temperature ranges that are selectable via an internal dip switch. For those applications that need a custom range, the transmitter can be easily configured for any range between -30 to 250°F with a minimum span of 40°F. The span and zero can be quickly adjusted with a simple push button design. The compact housing allows for the transmitter to be mounted in virtually any application.

The Series TTE is ideally suited for refrigeration, building automation, commercial hot water heaters and boilers, and water chillers applications.

SPECIFICATIONS

Temperature Sensor: Pt1000, 0.00385 DIN.
Output Temperature Ranges: User selectable – any range between –30 to 250°F with a minimum span of 40°F.
Temperature Limits: Ambient: 0 – 158°F (-18 to 70°C). Process: -30 to 250°F (-34.4 to 121.1°C).
Accuracy: Transmitter +/0.1% F.S. Probe +/-0.3% F.S.
Thermal Drift Effects: +/-0.02%/°C max.
Response Time: 250 ms.
Wetted Materials: 316 stainless steel.
Process Connection: 1/2″ male NPT.
Conduit Connection: 1/2″ female NPT.
Probe Length: 2″ to 18″ (depending on model).
Pressure Limits: 2000 PSI.
Power Requirements: 10 to 35 VDC.
Output Signal: 4-20 mA (two wire loop powered).
Optional Display: 2 lines X 8 character LCD.
Enclosure Rating: NEMA 4X (IP66) and explosion-proof for Class I, Groups B, C, D; Class II, Groups E, F, G; Class III.
Weight: 2 lb 8 oz (1134 g).
Agency Approvals: FM, CE.

DWYER INSTRUMENTS, INC.
P.O. BOX 373 • MICHIGAN CITY, INDIANA 46361, U.S.A.
Phone: 219/879-8000
Fax: 219/872-9057
www.dwyer-inst.com
e-mail: info@dwyer-inst.com

INSTALLATION

1. **Location:** Select a location where the temperature of the transmitter will be between 0 and 158°F. Distance from the receiver is limited only by total loop resistance.
2. **Position:** The transmitter is not position sensitive. Units with the optional display should be mounted for ease of viewing the display.
3. **Electrical Connection:**
   Wire Length - The maximum length of wire connecting the transmitter and receiver is a function of wire size and receiver resistance. Wiring should not contribute more than 10% of the receiver resistance to total loop resistance. For extremely long runs (over 1000 feet), choose receivers with lower resistance to minimize the size and cost of connecting leads.

Current (4-20 mA) Output Operation

An external power supply is required. See Fig. A for diagram of the connection of the power supply, transmitter and receiver. The range of appropriate receiver load resistance (RL) for the DC power supply voltage available is expressed by the formula:

$$R_L = \frac{V_{ps} - 10}{20mADC}$$

Shielded cable is recommended for control loop wiring.

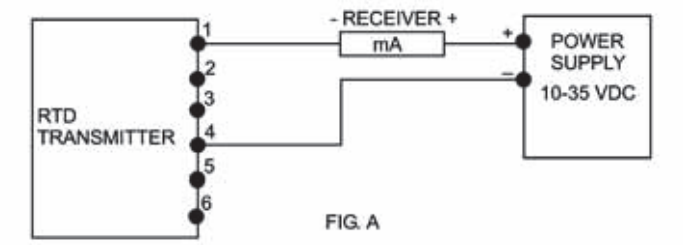

FIG. A

Explosion-Proof Installation Notes:

1. Install in accordance with any applicable national electric code.
2. Plug unused conduit openings. Plug must engage a minimum of 5 threads.
3. Use a conduit seal within 18 inches of conduit entry.
4. Disconnect power before servicing.

Electrical connections to the RTD Transmitter are made to the terminal block located inside the housing. Unscrew and remove the cover. Wire as shown in FIG. B.

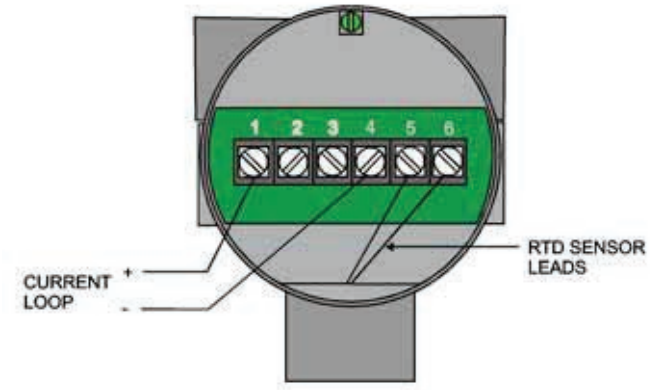

FIG. B

Temperature Range Selection

The RTD Transmitter has 7 built in temperature ranges and a user settable range that are selectable by setting the Dip Switch located inside the housing (Fig C). Switches 2, 3, and 4 are used to set the range. To set the desired range, unscrew and remove the cover and set the Dip Switch according to the following table:

	DIP SWITCH		
Selectable Ranges	**2**	**3**	**4**
40 to 90°F (4.4 to 32.2°C)	OFF	OFF	OFF
-20 to 140°F (-28.9 to 60°C)	ON	OFF	OFF
0 to 100°F (-17.8 to 37.8°C)	OFF	ON	OFF
30 to 240°F (-1.1 to 115.6°C)	ON	ON	OFF
32 to 212°F (0 to 100°C)	OFF	OFF	ON
32 to 122°F (0 to 50°C)	ON	OFF	ON
-30 to 65°C (-1.1 to 18.3°C)	OFF	ON	ON
User Settable	ON	ON	ON

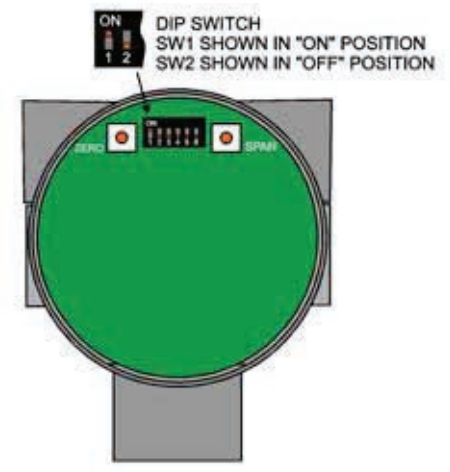

FIG. C

Setting and Calibrating the User Settable Range
By setting SWITCH 2, 3, and 4 on, the RTD Transmitter may be adjusted to a custom user specified range. The range may be any values between –30°F and +250°F (-34 to +121°C) with a MINIMUM SPAN of 40°F (22°C).

Equipment Required
In order to calibrate the unit for a custom range, a precision RTD simulator that can simulate a 1000 OHM DIN type RTD or precision decade box is required. The device must be capable of generating the correct RTD resistance to 0.1% or better.

Calibration Procedure
1. Set DIP SWITCHES 2, 3 and 4 ON.
2. Remove the RTD sensor leads from terminals 5 and 6 (Fig. B). Connect the precision RTD simulator or decade box to terminals 5 and 6.
3. Wire instrument as previously discussed. A current meter may be wired in series with the unit to verify the correct current output, but this is not necessary for calibration. Apply power to the unit.
4. If a precision RTD simulator is used, make sure it is set to simulate a 1000 OHM DIN 0.00385 RTD. Then set it to the desired minimum temperature. If a decade box is used refer to the table in Appendix A (°F) or Appendix B (°C) and set it to the resistance that represents the desired minimum temperature.
5. Press the ZERO button. If the unit has the optional LCD, the display will read ZERO OK momentarily. If a current meter is wired, it will read 4.00mA.
6. Repeat step 4 using the value for the maximum desired temperature.
7. Press the SPAN button. If the unit has the optional LCD, the display will read SPAN OK momentarily. If a current meter is wired, it will read 20.00mA.
8. Turn off power to the unit. Disconnect the RTD simulator or decade box and reconnect the RTD sensor to terminals 5 and 6. Calibration is complete.

Note: The calibration procedure does not effect the calibration of any of the built in ranges.

°F and °C Selection
If the unit has the optional LCD display, DIP SWITCH 1 sets the display to read in °F or °C. SWITCH 1 “OFF” = °F
SWITCH 1 “ON” = °C.

Output Current Display
If the unit has the optional LCD display, the lower display will show the output current if DIP SWITCH 5 is “ON”. Setting DIP SWITCH 5 “OFF” causes the lower display to be blank.

Open RTD Protection
Upon detecting an open RTD, the unit may be set to force the output to read 3.5mA or 21mA based upon the setting of DIP SWITCH 6.
SWITCH 6 “OFF”, output forced to 3.5mA
SWITCH 6 “ON”, output forced to 21mA

Calibration
The unit requires no calibration. An internal precision resistor continually self calibrates the unit. Calibration may be verified by removing the sensor leads and testing the unit against a precision RTD simulator or a precision decade box. If the unit is found to out of calibration it must be returned to the factory for service.

MAINTENANCE
Upon final installation of the Series TTE Explosion Proof RTD Temperature Transmitter, no routine maintenance is required. A periodic check of the system calibration is recommended. The Series TTE is not field serviceable and should be returned if repair is needed (field repair should not be attempted and may void warranty). Be sure to include a brief description of the problem plus any relevant application notes. Contact customer service to receive a return goods authorization number for shipping.

Appendix A - RTD Table, ˚F Plt 1000 DIN 0.00385

Values are in ohms

TEMP, °F	-0	-1	-2	-3	-4	-5	-6	-7	-8	-9
-30	864.7									
-20	886.6	884.4	882.2	880.0	877.8	875.6	873.5	871.3	869.1	866.9
-10	908.5	906.3	904.1	901.9	899.7	897.6	895.4	893.2	891.0	888.8
-0	930.3	928.2	926.0	923.8	921.6	919.4	917.2	915.0	912.9	910.7
TEMP, °F	**0**	**1**	**2**	**3**	**4**	**5**	**6**	**7**	**8**	**9**
0	930.3	932.5	934.7	936.9	939.1	941.2	943.4	945.6	947.8	950.0
10	952.1	954.3	956.5	958.7	960.9	963.0	965.2	967.4	969.6	971.7
20	973.9	976.1	978.3	980.4	982.6	984.8	987.0	989.1	991.3	993.5
30	995.7	997.8	1000.0	1002.2	1004.3	1006.5	1008.7	1010.9	1013.0	1015.2
40	1017.4	1019.5	1021.7	1023.9	1026.0	1028.2	1030.4	1032.5	1034.7	1036.9
50	1039.0	1041.2	1043.4	1045.5	1047.7	1049.9	1052.0	1054.2	1056.3	1058.5
60	1060.7	1062.8	1065.0	1067.1	1069.3	1071.5	1073.6	1075.8	1077.9	1080.1
70	1082.3	1984.4	1086.6	1088.7	1090.9	1093.0	1095.2	1097.4	1099.5	1101.6
80	1103.8	1106.0	1108.1	1110.3	1112.4	1114.6	1116.7	1118.9	1121.0	1123.2
90	1125.3	1127.5	1129.6	1131.8	1133.9	1136.1	1138.2	1040.4	1142.5	1144.7
TEMP, °F	**0**	**1**	**2**	**3**	**4**	**5**	**6**	**7**	**8**	**9**
100	1146.8	1149.0	1151.1	1153.3	1155.4	1157.6	1159.7	1161.8	1164.0	1166.1
110	1168.3	1170.4	1172.6	1174.7	1176.9	1179.0	1181.1	1183.3	1185.4	1187.6
120	1189.7	1191.8	1194.0	1196.1	1198.3	1200.4	1202.5	1204.7	1207.0	1208.9
130	1211.1	1213.2	1215.4	1217.5	1219.6	1221.8	1223.9	1226.0	1228.2	1230.3
140	1232.4	1234.6	1236.7	1238.8	1241.0	1243.1	1245.2	1247.3	1249.5	1251.6
150	1253.7	1255.9	1258.0	1260.1	1262.2	1264.4	1266.5	1268.6	1270.8	1272.9
160	1275.0	1277.1	1279.3	1281.4	1283.5	1285.6	1287.8	1289.9	1292.0	1294.1
170	1296.2	1298.4	1300.5	1302.6	1304.7	1306.9	1309.0	1311.1	1313.2	1315.3
180	1317.5	1319.6	1321.7	1323.8	1325.9	1328.0	1330.2	1332.3	1334.4	1336.5
190	1338.6	1340.7	1342.8	1345.0	1347.1	1349.2	1351.3	1353.4	1355.5	1357.6
TEMP, °F	**0**	**1**	**2**	**3**	**4**	**5**	**6**	**7**	**8**	**9**
200.0	1359.7	1361.9	1364.0	1366.1	1368.2	1370.3	1372.4	1374.5	1376.6	1378.7
210.0	1380.8	1383.0	1385.1	1387.2	1389.3	1391.4	1393.5	1395.6	1397.7	1399.8
220.0	1401.9	1404.0	1406.1	1408.2	1410.3	1412.4	1414.5	1416.6	1418.7	1420.8
230.0	1422.9	1425.0	1427.1	1429.2	1431.3	1433.4	1435.5	1437.6	1439.7	1441.8
240.0	1443.9	1446.0	1448.1	1450.2	1452.3	1454.4	1456.5	1458.6	1460.7	1462.8
250.0	1464.9									

Appendix B - RTD Table, ˚C Plt 1000 DIN 0.00385

Values are in ohms

TEMP, °C	-0	-1	-2	-3	-4	-5	-6	-7	-8	-9
-30	888.2	878.3	874.3	870.4	866.4					
-20	921.6	917.7	913.7	909.8	905.9	901.9	898.0	894.0	890.1	886.2
-10	960.9	956.9	953.0	949.1	945.2	941.2	937.3	933.4	929.5	925.5
-0	1000.0	996.1	992.2	988.3	984.4	980.4	976.5	972.6	968.7	964.8
TEMP, °C	**0**	**1**	**2**	**3**	**4**	**5**	**6**	**7**	**8**	**9**
0	1000.0	1003.9	1007.8	1011.7	1015.6	1019.5	1023.4	1027.3	1031.2	1035.1
10	1039.0	1042.9	1046.8	1050.7	1054.6	1058.5	1062.4	1066.3	1070.2	1074.1
20	1077.9	1081.8	1085.7	1089.6	1093.5	1097.4	1101.2	1105.1	1109.0	1112.9
30	1116.7	1120.6	1124.5	1128.3	1132.2	1136.1	1140.0	1143.8	1147.7	1151.5
40	1155.4	1159.3	1163.1	1167.0	1170.9	1174.7	1178.6	1182.4	1186.3	1190.1
50	1194.0	1197.8	1201.7	1205.5	1209.4	1213.2	1217.1	1220.9	1224.7	1228.6
60	1232.4	1236.3	1240.1	1243.9	1247.8	1251.6	1255.4	1259.3	1263.1	1266.9
70	1270.8	1274.6	1278.4	1282.2	1286.1	1289.9	1293.7	1297.5	1301.3	1305.2
80	1309.0	1312.8	1316.6	1320.4	1324.2	1328.0	1331.8	1335.7	1339.5	1343.3
90	1347.1	1350.9	1354.7	1358.5	1362.3	1366.1	1369.9	1373.7	1377.5	1381.3
TEMP, °C	**0**	**1**	**2**	**3**	**4**	**5**	**6**	**7**	**8**	**9**
100	1385.1	1388.9	1392.6	1396.4	1400.2	1404.0	1407.8	1411.6	1415.4	1419.1
110	1422.9	1426.7	1430.5	1434.3	1438.0	1441.8	1445.6	1449.4	1453.1	1456.9
120	1460.7	1464.5								

©Copyright 2008 Dwyer Instruments, Inc.

Printed in U.S.A. 12/08

FR# 02-443554-00 Rev.1

DWYER INSTRUMENTS, INC.

P.O. BOX 373 • MICHIGAN CITY, INDIANA 46361, U.S.A.

Phone: 219/879-8000

Fax: 219/872-9057

www.dwyer-inst.com

e-mail: info@dwyer-inst.com

AHU-3:INTRNSIC SAFETY BARRIER:FILTER DP, BUILDING STATIC PRESS TRANSMITTER

MTL7700 range

DIN-rail mounting safety barriers

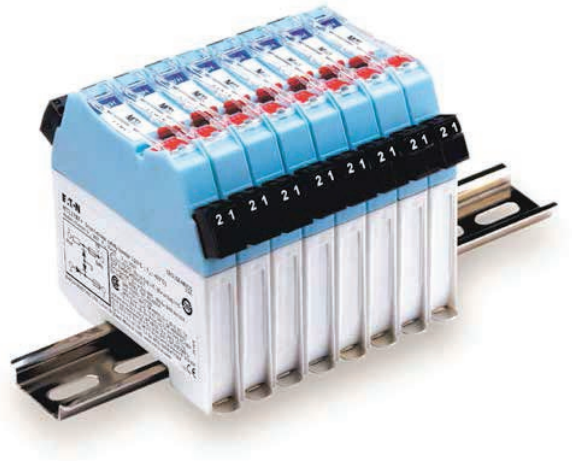

- **Removable terminals**
- **Bussed power feed to other modules**
- **Relay and solid state switch modules**
- **Dual channel variants – 6.3mm per channel**
- **Proximity detector inputs**
- **Electronic fusing**
- **Direct replacement for MTL700 range barriers**
- **Compatible terminal numbering and safety descriptions**

Since its introduction in 1984 the MTL700 range has established itself as the worldwide standard for safety barriers. Known for its quality and reliability, the MTL700 range is widely used in applications all over the world.

The MTL7700 range follows closely in the footsteps of the MTL700, but as a DIN rail mounting barrier, providing quick and easy installation without the need for special hardware.

Removable terminals are used for ease of installation, maintenance and for providing a loop disconnect by simply unplugging the terminals from the side of the module. Wire entry is also angled to assist wiring within limited space enclosures.

MTL7700 barriers clamp simply and securely onto standard T-section DIN rail, simultaneously making a reliable IS earth connection.

For applications where field power is required for switch inputs or 2-wire transmitters, the MTL7700 range provides a bussed power feed facility. When used in conjunction with the MTL7798 power feed module the user has a fully protected, electronically fused supply to many barriers with no additional wiring required.

MTL7700 active modules are protected with an electronic fuse for the majority of applications. The MTL7798 active fused, power feed module can protect up to 40 other modules using the bussed power facility and provides a clear indication of a trip condition via a red LED.

The MTL774X range of barriers offer a NAMUR compatible input and a choice of relay or solid state output. The solid state outputs are floating so switching to ground or from a power rail into an input is also possible. The solid state interface also provides a high frequency transfer for use in flow or rotation applications.

Dual channel relay or solid state modules offer the highest packing density with only 6.3mm per channel and when used in conjunction with the power bus, offer users the minimum of wiring with the maximum packing density and the lowest cost per channel.

Powering Business Worldwide

Eaton Electric Limited,
Great Marlings, Butterfield, Luton
Beds, LU2 8DL, UK.
Tel: + 44 (0)1582 723633 Fax: + 44 (0)1582 422283
E-mail: mtlenquiry@eaton.com
www.mtl-inst.com

© 2018 Eaton
All Rights Reserved
Publication No.
EPS7700 Rev 13 010218

SPECIFICATIONS

'Key' barriers shown in blue

For notes 1 to 7 see 'Terminology' (later in this section)

Model No.	Safety description [1]			Polarities available [2]			Application	Basic circuit	Max. end-to-end resistance [3]	Vwkg at [4] 10µA or (1µA)	Vmax [5]	Fuse rating [6]
MTL	V	Ω	mA	+	–	ac		Hazardous Safe	Ω	V	V	mA
7706+	28	300	93	✓			Transmitters	See 'HOW THEY WORK' and 'ACTIVE / ELECTRONICALLY PROTECTED BARRIERS'	See additional specification		35	50
7707+	28	300	93	✓			Switches				35	50
	28	diode									35	50
7707P+	28	164	171	✓			Transmitters, switches, controller outputs IIB				35	50
	28	diode	–								35	50
7710+/-	10	50	200	✓	✓				75	6.0	7.0	50
7715+	15	100	150	✓			6V dc & 4V ac systems		119	12.0	13.1	100
7715P+	15	50	291	✓			12V systems		64	12.3	13.4	100
7722+/-	22	150	147	✓	✓		12V dc systems		174	19.6	20.2	50
7728+	28	300	93	✓			18V dc systems		333	25.9	26.5	50
7728-	28	300	93		✓		Controller outputs, solenoids		333	25.9	26.5	50
7728ac	28	300	93			✓	Transmitters		333	25.0	25.9	50
7728P+	28	234	119	✓			Controller outputs, solenoid valves		252	24.9	25.9	100
7729P+	28	164	170	✓			Controller outputs, solenoid valves IIB		184	24.9	25.9	100
774X	10	—	19				Prox sw input, solid state output and line fault detect	See 'ACTIVE / ELECTRONICALLY PROTECTED BARRIERS'	—	—	30/35	50
7751ac	1	10	100			✓	Sensors		20	0.3	2.0	250
	1	10	100			✓			20	0.3	2.0	250
7755ac	3	10	300			✓	2- or 3-Wire RTDs (floating bridge)		19.0	(1)	3.4	250
	3	10	300			✓			19.0	(1)	3.4	250
7756ac	3	10	300			✓	3-Wire RTDs (grounded bridge)		19.0	(0.7)	2.7	250
	3	10	300			✓			19.0	(0.7)	2.7	250
	3	10	300			✓			19.0	(0.7)	2.7	250
7758+/-	7.5	10	750	✓	✓		Gas detectors		17	6.0	7.3	200
	7.5	10	750						17	6.0	7.3	200
7761ac	9	90	100			✓			107	6.0	7.0	100
	9	90	100						107	6.0	7.0	100
7761Pac	9	350	26			✓	Strain-gauge bridges		378	6.8	7.5	50
	9	350	26						378	6.8	7.5	50
7764+/-/ac	12	1k	12	✓	✓	✓	Strain-gauge bridges		1050	10.0	10.9	50
	12	1k	12						1050	10.0	10.9	50
7766ac	12	150	80			✓			174	10.0	10.6	50
	12	150	80						174	10.0	10.6	50
7766Pac	12	75	157			✓	Strain-gauge bridges		92	9.6	10.5	100
	12	75	157				Strain-gauge bridges		92	9.6	10.5	100
7767+	15	100	150	✓			12V dc systems		119	12.0	13.1	100
	15	100	150				12V dc systems		119	12.0	13.1	100
7779+	28	300	93	✓			Controller outputs	requires channels separate in IIC	333	25.9	26.5	50
	28	300	93				Controller outputs		333	25.9	26.5	50
7796+	26	300	87	✓			Vibration probes		333	23.9	24.5	50
	20	390	51						428	18.3	18.9	50
7796-	26	300	87		✓		Vibration probes		333	23.9	24.5	50
	20	390	51						428	18.3	18.9	50
7760ac	10	50	200			✓	Active dc & ac sensors		75	6.0	6.7	50
	10	50	200				Thermocouples		75	6.0	6.7	50
7765ac	15	100	150			✓			124	12.0	12.5	50
	15	100	150						124	12.0	12.5	50
7778ac	28	600	47			✓			651	24.0	25.4	50
	28	600	47						651	24.0	25.4	50
7789+	28	300	93[a]	✓			Switch inputs / Signal returns		651	26.6	27.2	50
									651	26.6	27.2	50
	28	diode	—						0.9V+26Ω	26.6	27.2	50
	28	diode	—						0.9V+26Ω	26.6	27.2	50
7787+/-	28	300	93	✓	✓		Transmitters		333	26.6	27.2	50
	28	diode	—				Controller outputs, switches		0.9V+21Ω	26.6	27.2	50
7787P+	28	234	119	✓					253	26.4	27.2	80
	28	diode	—						0.9V+21Ω	26.4	27.2	80
7788+	28	300	93	✓			Transmitters		333	25.9	26.5	50
	10	50	200	✓					75	6.0	7.0	50
7788R+	28	300	93	✓					333	25.9	26.5	50
	10	50	200	✓					75	6.0	7.0	50

[a] Terminals 3 & 7 connected together

* Diagrams show positive versions. All diodes reversed on negative versions. Additional diodes fitted on ac versions.

HOW THEY WORK

All MTL7700 range barriers are based on the same simple principle. Each channel contains two stages of pulse-tested Zener or forward-connected diodes and an 'infallible' terminating resistor. In the event of an electrical fault in the safe area, the diodes limit the voltage that can reach the hazardous area and the resistor limits the current. A fuse protects the diodes, and the two stages of voltage limitation ensure continued safety if either stage should fail. No active output-current limiting circuits are employed. All models are certified 'ia' for all zones and 'IIC' for all explosive atmospheres (except MTL7707P+ and MTL7729P+, 'ia' 'IIB').

TERMINOLOGY

1. Safety description
The safety description of a barrier, eg '10V 50Ω 200mA', refers to the maximum voltage of the terminating Zener or forward diode while the fuse is blowing, the minimum value of the terminating resistor, and the corresponding maximum short-circuit current. It is an indication of the fault energy that can be developed in the hazardous area, and not of the working voltage or end-to-end resistance.

2. Polarity
Barriers may be polarised + or –, or non-polarised ('ac'). Polarised barriers accept and/or deliver safe-area voltages of the specified polarity only. Non-polarised barriers support voltages of either polarity applied at either end.

3. End-to-end resistance
The resistance between the two ends of a barrier channel at 20°C, i.e. of the resistors and the fuse. If diodes or transistors are present, their voltage drop (transistors ON) is quoted in addition.

4. Working voltage (Vwkg)
The greatest steady voltage, of appropriate polarity, that can be applied between the safe-area terminal of a 'basic' barrier channel and earth at 20°C for the specified leakage current, with the hazardous-area terminal open circuit.

5. Maximum voltage (Vmax)
The greatest steady voltage, of appropriate polarity, that can be applied continuously between the safe-area terminal of any barrier channel and earth at 20°C without blowing the fuse. For 'basic' barriers, it is specified with the hazardous-area terminal open circuit; if current is drawn in the hazardous area, the maximum voltage for these barriers is reduced. The 'ac' channels of 'basic' barriers and most channels of overvolt-protected barriers withstand voltages of the opposite polarity also – see circuit diagrams.

6. Fuse rating
The greatest current that can be passed continuously (for 1000 hours at 35°C) through the fuse.

7. Star connection
In star-connected barriers, the two channels are interlocked such that the voltage between them cannot exceed the working voltage, Vwkg: this allows for higher cable capacitance or inductance.

8. Maximum safe-area voltage (U_m)
The maximum permissible safe-area voltage (U_m) for MTL7700 range barriers is 250V ac/dc.

GENERAL SPECIFICATION

Ambient temperature and humidity limits
–20 to +60°C continuous working
–40 to +80°C storage
5–95% RH

Leakage current
For 'basic' barriers with a working voltage of 5V or more, the leakage current decreases by at least one decade per volt reduction in applied voltage below the working voltage, over two decades. For the MTL7755ac/7756ac it decreases by at least one decade for a 0.4V reduction in applied voltage.

Terminations
Removable terminals accommodate conductors up to 2.5mm^2 (13AWG). Hazardous-area terminals are identified by blue labels. Removal force >15N

Colour coding of barrier label
Grey: non-polarised
Red: positive polarity (MTL7706 negative to transmitter)
Black: negative polarity
White: dummy barrier, MTL7799

Weight
140g approx

Mounting and earthing
By 35mm Top Hat DIN rail

DIMENSIONS (mm)

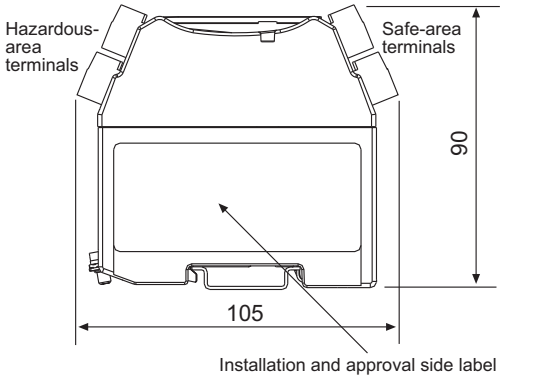

MTL7700 RANGE KEY BARRIERS SUMMARISED

TYPE	APPLICATION	KEY BARRIER
Analogue input (low-level)	Resistance temperature detectors Thermocouples, ac sensors	7756ac 7760ac
Analogue input (high-level)	Transmitters, 2-wire, 4/20mA	7706+ 7787+
Analogue output	Controller outputs, one line earthed Controller outputs, neither line earthed	7728+ 7787+
Digital (on/off) input	Switches	7787+ 7741/3
Digital (on/off) output	Solenoids, alarms, LEDs	7728

ACTIVE / ELECTRONICALLY PROTECTED BARRIERS

ACTIVE / ELECTRONICALLY PROTECTED BARRIERS

The following barriers have built-in overvolt protection, allowing their use with unregulated power supplies. In many applications, eg, sensor inputs or controller outputs, there is insufficient power available to blow the barrier fuse and this additional protection is not necessary. However, where the barrier is connected to a power supply, eg, for energising transmitters, switches, solenoids or local alarms, overvolt protection allows the barriers to be used with unregulated supplies and also gives protection against faulty wiring during commissioning.

MTL7706+ for 'smart' 2-wire 4/20mA transmitters

The MTL7706+ is a 1-channel shunt-diode safety barrier, with built-in electronic overvolt protection, for energising a 2-wire, 4/20mA transmitter in a hazardous area. It is powered from a positive supply of 20–35V dc and delivers a 4/20mA signal into an earthed load in the safe area. It is proof against short circuits in the field and in the safe area and is extremely accurate. The MTL7706+ will pass incoming communication signals up to 10kHz from a 'smart' transmitter, while in the outgoing direction it will pass signals of any frequency likely to be encountered.

Since the MTL7706+ has no return channel for energising the load, the entire output of the single '28V' channel is available to power the transmitter, providing high output capability. This channel is negatively polarised, and the safe-area signal is in fact the very current that returns through it from the hazardous area, the novel circuit being energised by a built-in floating dc supply derived from the external dc source of power.

To prevent any leakage through the zener diodes and maximise the output voltage available at 20mA, the floating supply is given a rising voltage/current characteristic. A separate circuit limits the current to protect the fuse in the event of a short circuit in the hazardous area.

With a 20V supply, the barrier will deliver 16.2V minimum at 20mA for the transmitter and lines and consumes typically 45mA at 24V operation.

BASIC CIRCUIT

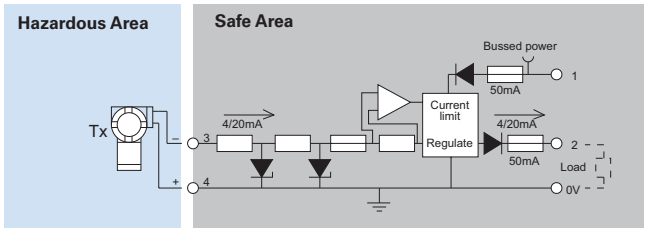

ADDITIONAL SPECIFICATION

Safety description
28V 300Ω 93mA

Supply voltage
20 to 35V dc w.r.t earth

Output current
4 to 20 mA

Voltage available to transmitter and lines
16.2V @ 20mA with 250Ω load (negative w.r.t. earth)
11.0V @ 20mA with 500Ω load (negative w.r.t. earth)

Accuracy
±2μA under all conditions

Safe-area load resistance
0 to 500Ω

Supply current
45mA typical at 20mA and 24V supply
60mA maximum at 20mA and 20V supply

MTL7707+ for switch inputs and switched outputs

The MTL7707+ is a 2-channel shunt-diode safety barrier similar to the MTL7787+ but with built-in electronic overvolt protection. It is intended primarily for safeguarding a hazardous-area switch controlling a relay, opto-coupler or other safe-area load from an unregulated dc supply in the safe area.

The outgoing channel accepts supply voltages up to +35V and is protected against reverse voltages: the return channel is unaffected by voltages up to +250V.

In normal operation the protection circuit introduces only a small voltage drop and shunts less than 1mA to earth, so its overall effect is minimal. If the supply voltage exceeds about 27V, however, causing the Zener diodes to conduct – or if the safe-area load has a very low resistance – the supply current is limited automatically to 50mA, protecting the fuse and power supply and enabling the loop to continue working.

BASIC CIRCUIT

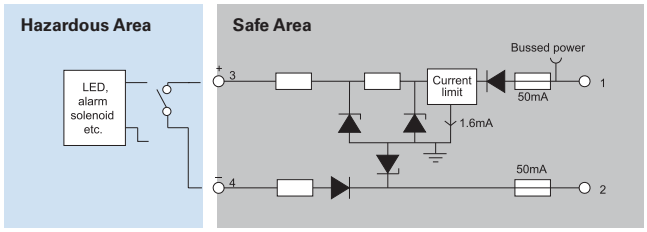

ADDITIONAL SPECIFICATION

Safety description
28V 300Ω 93mA, terminals 1 to 3
28V Diode, terminals 2 -4

Supply voltage
10 to 35V dc with respect to earth

Output current
Up to 35mA available

Maximum voltage drop
(at 20°C, current not limited)
Iout x 345Ω + 0.3V, terminals 1 to 3
Iout x 25Ω + 0.9V, terminals 4 to 2

Supply current
Iout + 1.6mA, supply <26V
Limited to 50mA, supply >28V or low load resistance

MTL7707P+ for switch inputs and switched outputs, 2W Transmitters (IIB gases)

The MTL7707P+ is a two-channel shunt-diode safety barrier similar to the MTL7787P+, but is designed for use with group IIB gases and features built-in electronic overvolt protection allowing use with unregulated power supplies up to 35V dc. It is intended primarily as a low cost solution for driving IIB certified 2-wire 4/20mA transmitters, but can also be used with controller outputs with current monitoring, solenoid valves and switches. To protect the fuse and enable the loop to continue working, the supply current is limited automatically at 50mA should the output be short-circuited or excess voltage applied.

BASIC CIRCUIT

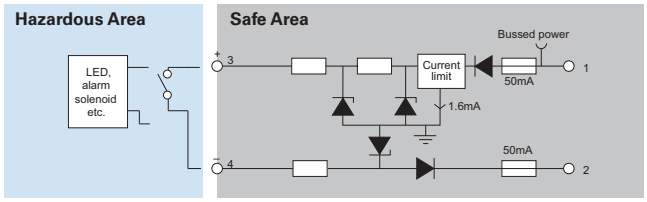

ADDITIONAL SPECIFICATION

Safety description
28V 164Ω 171mA, terminals 1 to 3
28V Diode, terminals 4 to 2

Supply voltage
10 to 35V dc with respect to earth

Output current
Up to 35mA available

Maximum voltage drop
(at 20ºC, current not limited)
Iout x 218Ω + 0.3V, terminals 1 to 3
Iout x 20.1Ω + 0.9V, terminals 4 to 2

Supply current
Iout + 1.6mA, supply <26V
Limited to 50mA, supply >28V or low load resistance

MTL7741 proximity sensor or switch input and relay output

The MTL7741 is a single channel switch/prox input barrier with changeover relay contacts acting as the safe area interface. Relay contacts provide a universal interface capable of switching a wide range of signals including ac, low level and high level voltages. Phase reversal is achieved by connecting the normally open or normally closed contacts as required. The power bus terminal may be used to connect the module to a power source.

BASIC CIRCUIT

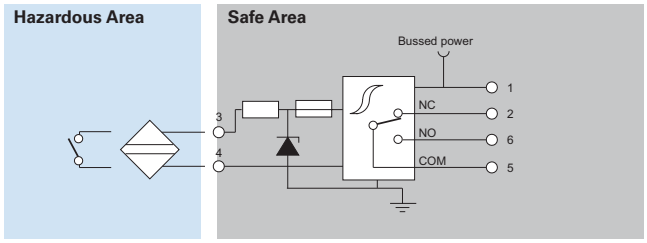

ADDITIONAL SPECIFICATION

Safety description
10V 19mA

Supply voltage
22.9 to 30V dc with respect to earth

Input characteristics
Relay energised if input >2.1mA(<2kΩ)
Relay de-energised if input <1.2mA(>10kΩ)

Relay Contacts
33V ac 0.5A. Resistive
30V dc, 1A. Resistive

Supply current
26mA maximum @ 24V

Response time
<10ms

MTL7742 proximity sensor or switch input with solid state output

The MTL7742 is a single channel switch/prox input barrier with an open collector solid state interface to the safe area equipment. The solid state switch is especially useful for high frequency switching apparatus including pulse and rotational sensors. The power bus terminal can be used to connect power to the module and the input power supply range makes the module suitable for use with unregulated supplies.

BASIC CIRCUIT

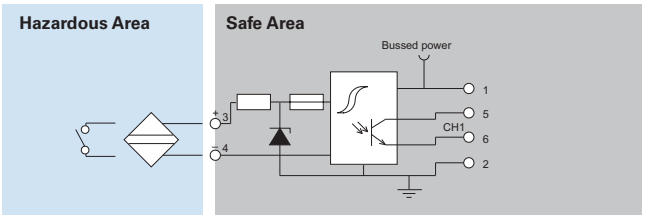

ADDITIONAL SPECIFICATION

Safety description
10V 19mA

Supply voltage
20 to 35V dc with respect to earth

Input characteristics
Output energised if input >2.1mA(<2kΩ)
Output de-energised if input <1.2mA(>10kΩ)

Output characteristics

Operating frequency	dc to 2.5kHz
Max off-state voltage	35V
Max off-state leakage	10µA
Max on-state voltage drop	<1.41V @ 50mA, <1.22V @ 2mA typically <1V
Max on-state current	50mA

Supply current
20mA maximum @ 24V

MTL7743 2 channel proximity sensor or switch input and relay outputs

The MTL7743 is a dual channel switch/prox sensor input barrier with a relay interface. This module is ideal for applications where high channel packing densities are required for digital inputs. Power is connected using the power bus terminal.

BASIC CIRCUIT

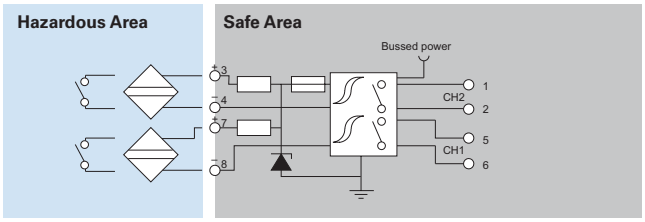

ADDITIONAL SPECIFICATION

Safety description
10V 19mA

Supply voltage
22.9 to 30V dc with respect to earth

Input characteristics
Relay energised if input >2.1mA(<2kΩ)
Relay de-energised if input <1.2mA(>10kΩ)

Relay Contacts
AC 33V, 0.5A. resistive; DC 30V, 1A. resistive

Supply current
45mA maximum @ 24V

Response time
<10ms

MTL7744 2 channel proximity sensor or switch inputs with solid state outputs

A dual channel version of the MTL7742. This module provides two solid state interfaces for prox/switch inputs. Power is connected via the power bus.

BASIC CIRCUIT

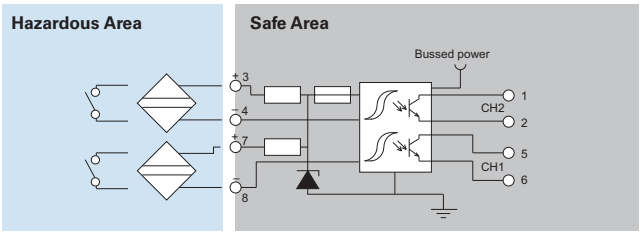

ADDITIONAL SPECIFICATION

Safety description
10V 19mA
10V 19mA

Supply voltage
20 to 35V dc with respect to earth

Input characteristics
Output energised if input >2.1mA(<2kΩ)
Output de-energised if input <1.2mA(>10k)

Output characteristics

Operating frequency	dc to 2.5kHz
Max off-state voltage	35V
Max off-state leakage	10µA
Max on-state voltage drop	1.41V @ 50mA, 1.22V @ 2mA typically <1V
Max on-state current	50mA

Supply current
29mA maximum @ 24V

MTL7745 proximity sensor or switch input with relay output and line fault detect

The MTL7745 is a single channel switch/prox input barrier providing line fault detection. Proximity detectors or switches fitted with end-of-line resistors may be connected. Short circuit or open ciruit conditions in the field wiring will generate an alarm condition. The LFD relay contacts close when a fault is detected allowing the contacts to be connected in parallel to provide a common alarm. The power bus terminal can be used to connect power to this module.

BASIC CIRCUIT

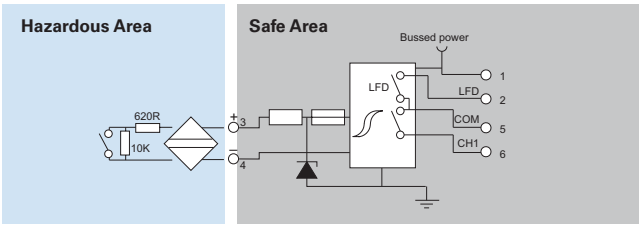

ADDITIONAL SPECIFICATION

Safety description
10V 19mA

Supply voltage
22.9 to 30V dc with respect to earth

Input characteristics
Output energised if input >2.1mA(<2kΩ)
Output de-energised if input <1.2mA(>10kΩ)

LFD relay + Red LED
Energised if input <50µA or <100Ω

Relay contacts
33V ac 0.5A. Resistive
30V dc, 1A. Resistive

Supply current
38mA maximum @ 24V

Response time
<10ms

MTL7798 Power feed and protection module

The MTL7798 power feed module incorporates both voltage and current sense mechanisms to protect barrier circuits by activating a solid state trip mechanism when fault or overload conditions occur in the power source circuit. Resetting the module after tripping is achieved by interupting the supply to the unit. A red LED indicates a circuit trip condition and a green LED the availability of power at the outputs. Bussed power for other modules is sourced from the top of the unit using the Bus Power Link BPL7700 or via terminals 1 and 2.

BASIC CIRCUIT

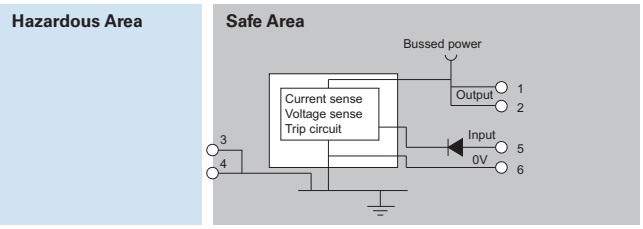

ADDITIONAL SPECIFICATION

Input voltage range (terminals 5&6)
20 to 26.8V

Maximum input voltage capability
45V

Power source requirements
>1.8A

Trip mechanism
Minimum trip 26.8V @ 20°C (+18mV/°C)

Output current range
0 to 800mA

Maximum voltage drop
20mV @ 0mA, 1.0V @ 800mA load

MTL7700 RANGE BARRIER APPLICATIONS

MTL7700 range barriers protect devices located in all normally occurring explosive atmospheres, including air/flammable gas mixtures, dusts and fibres. Applications covered include the protection of installations incorporating uncertified devices ('simple apparatus') such as thermocouples, switches and resistive sensors, or separately certified 'energy storing' (or 'voltage producing') apparatus including ac sensors, transmitters and current-to-pneumatic (I/P) converters. Recommended choices for specific applications are discussed briefly in the following pages.

ANALOGUE INPUTS (HIGH LEVEL)

2-wire transmitters, 4/20mA, conventional and smart

The recommended barrier for use with 'conventional' and 'smart' 4/20mA transmitters (fed by a 26V regulated supply) is the MTL7787+. This provides up to 12.9V (14.6V for MTL7787P+) at Vwkg and 20mA for a transmitter and its lines as well as 5V for the typical 250Ω load. This application and this barrier is suitable for use with the optional power bus facility.

The MTL7706+ is recommended for applications where an unregulated supply of up to 35V is used. It provides 16.0V for conventional and Smart transmitters at 20mA, as well as 5V for a typical 250Ω load. With the MTL7706+ terminal 3 is negative with respect to earth, so the connections to terminals 3 and 4 should be reversed.

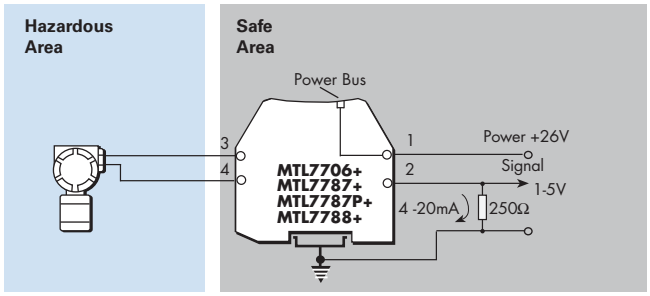

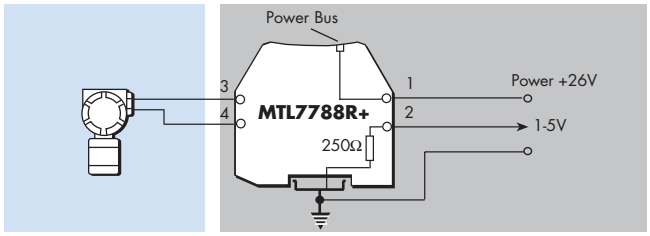

Vibration probes

The 3-wire transmitters used with vibration monitoring equipment are invariably supplied by a –24V dc power supply – hence the recommended barrier choice is the negatively-polarised MTL7796–.

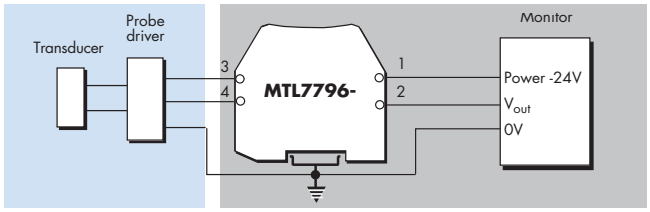

ANALOGUE INPUTS (LOW-LEVEL)

Thermocouples and mV sources

The recommended barrier for thermocouples and mV sources is the MTL7760ac. This 2-channel non-polarised barrier retains the 'earth-free' nature of the signal and, providing the receiver's input 'floats', rejects common-mode ac and dc interference up to at least 7V and is unaffected by earth faults on the primary element.

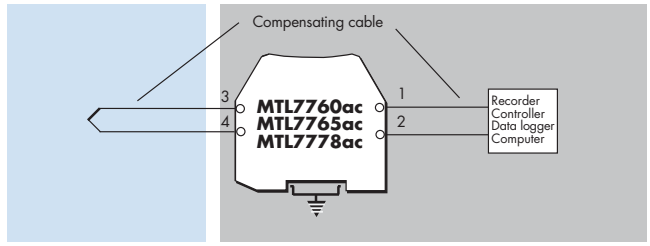

AC sensors, photocells, microphones and turbine flowmeters

The MTL7760ac is the recommended choice for these devices. While many of these are designated 'simple apparatus' and thus do not need certification, note that some ac sensors may be subject to a significant level of inductance and will therefore need to be designed and certified for hazardous-area locations.

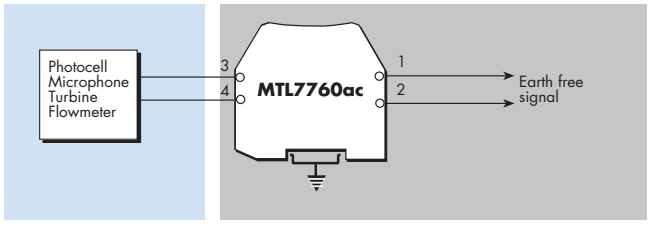

Slidewire displacement transducers

The simplest choice is the MTL7760ac. This barrier supplies power and brings back a unipolar signal.

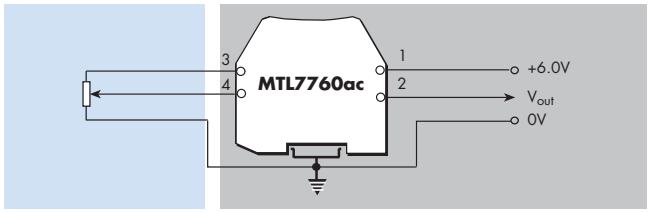

RTDs

For 3-wire RTDs, a single MTL7755ac barrier is the most economical choice. This is suitable for use with a floating bridge – the two leads from the bridge arms are protected by the barrier with the third (supply) lead being earthed through the barrier. The barrier has a low end-to-end resistance of only 19Ω/channel to minimise span changes and its channels track within 0.15Ω (between –20°C and +60°C) to minimise zero shift with temperature.

If the bridge circuit is already earthed, the third barrier channel provided by an MTL7756ac is needed. For extreme accuracy, 3 channels and an earth-free bridge can be used, a configuration that cancels out the small errors due to barrier leakage.

Channels 1 and 2 (those between terminals 1 & 2 and 3 & 4 respectively) track to within 0.15Ω (between –20°C and 60°C).

4-wire constant-current circuits do not need matched barrier resistances and can be protected by two MTL7761ac barriers. If the increase in loop resistance is too great, use two MTL7755ac barriers instead.

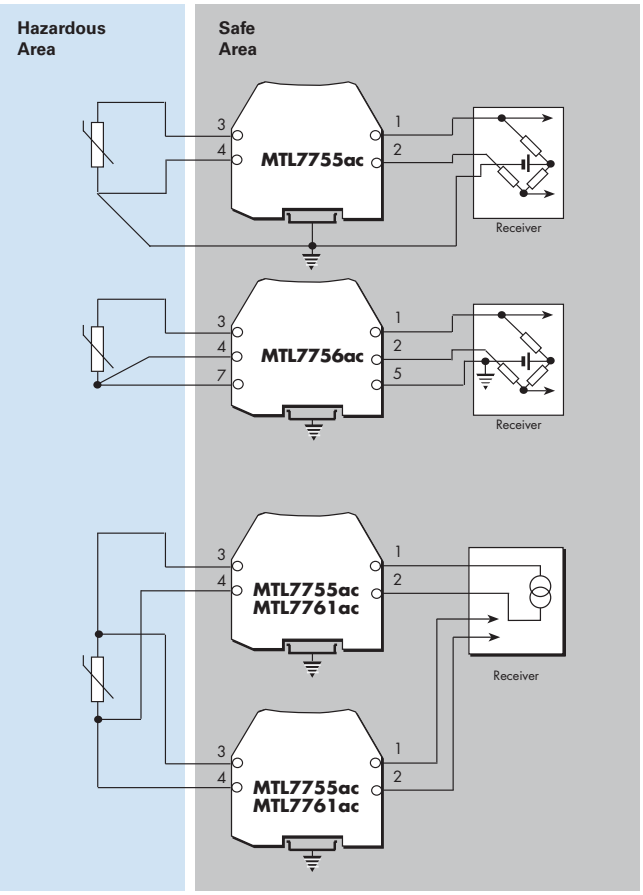

STRAIN-GAUGE BRIDGES

Single strain-gauge bridges

This shows an arrangement using two or three barriers, which is safe in IIC gases.

With the MTL7761ac, the circuit is powered from a 12V (±6V), 214Ω (107Ω + 107Ω) source. If the resistive bridge elements are 230Ω, then the voltage applied to the bridge will be 6.2V, and if the bridge resistances are 350Ω, then the bridge's applied voltage will be 7.4V.

An MTL7764ac can be used to sense the bridge supply voltage.

An MTL7761ac is used here for the mV output.

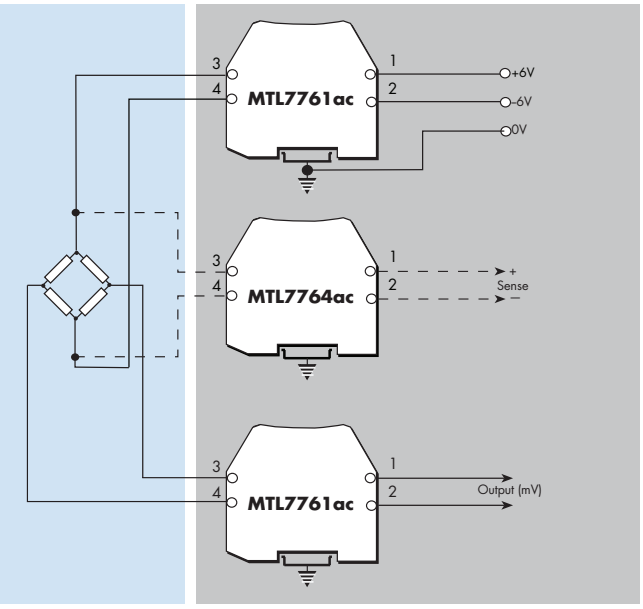

STRAIN-GAUGE BRIDGES (cont)

Double strain-gauge bridges
Quite frequently there is a demand to monitor two load cells, and a possible circuit, safe in IIC, is shown.

Here, the lower voltage drop of the MTL7766Pac is an advantage.

The MTL7766Pac supplies power to the bridge(s) while two MTL7761Pac barriers interface with the sense and pick-off circuits.

Using 350Ω bridge systems, the following voltages are available from an MTL7766Pac with a ±10V supply:

1 bridge:	13.11V
2 bridges:	9.75V

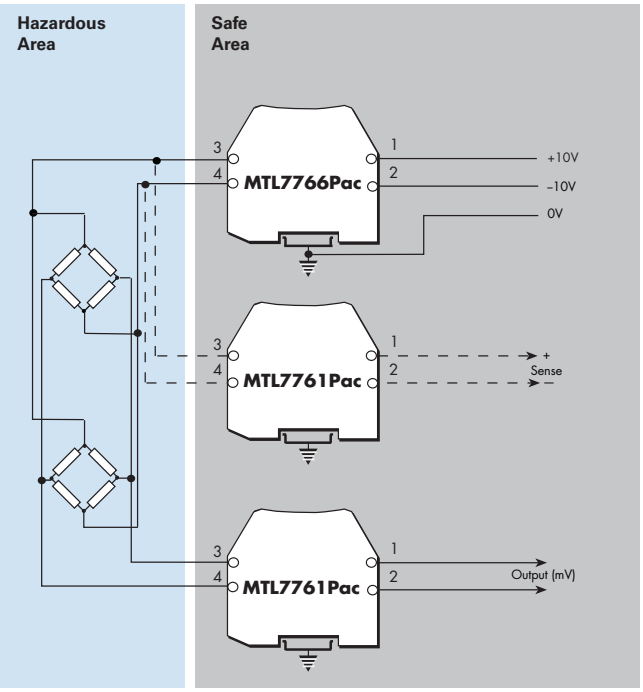

ANALOGUE OUTPUTS

Controller outputs (I/P converters)
The single-channel MTL7728+ with a voltage drop of 6.66V at 20mA is the recommended choice for most controller outputs. Higher-power versions are available: the MTL7728P+ (5.1V drop) is suitable for IIC applications; the MTL7729P+ (3.68V drop) for IIB applications.

For controllers with an output circuit separated from the 0V rail by the control transistor, the 2-channel MTL7787+ is the preferred choice as the return channel can handle up to 26.6V allowing the control signal to be turned off completely. The voltage drop is 8.1V at 20mA. A higher-power version of the latter, the MTL7787P+, is also available. The return channel of these barriers handle up to 26.4V and the maximum voltage drop is only 6.38V.

The MTL7787+ and MTL7787P+ are also suitable for controllers containing a resistor which enables the return current to be monitored for high-integrity operation.

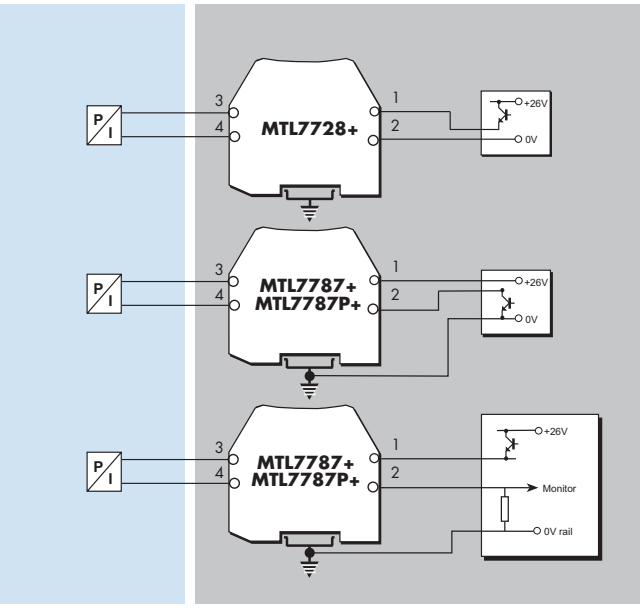

DIGITAL (ON/OFF) INPUTS

Switches

The normal choice is the MTL7787+/7787P+ with a regulated supply. The MTL774X modules are recommended for applications where an unregulated supply of up to 30V for relay output modules, or 35V for solid state output modules, is used.

The MTL7789+ offers a dual channel passive barrier for switch inputs where the input current for each channel is <10mA.

Switches / Proximity detectors

Eaton's MTL range of new switch/prox input barriers provide the user with a choice of relay and solid state outputs in single and dual channel versions.

The MTL7741 is single channel with a changeover relay output.

The MTL7742 has a single channel solid state switch that can be configured to switch from a power rail or down to ground. This is also ideal for high switching frequency applications.

The MTL7743 and MTL7744 are dual channel versions affording very high packing densities. Power must be provided to these modules using the power bus facility.

The MTL7745 is a single channel proximity input (or switch input if 'end of lines' resistors are fitted) with relay contacts providing switch and line fault status. The LFD relay contacts close when a fault is detected.

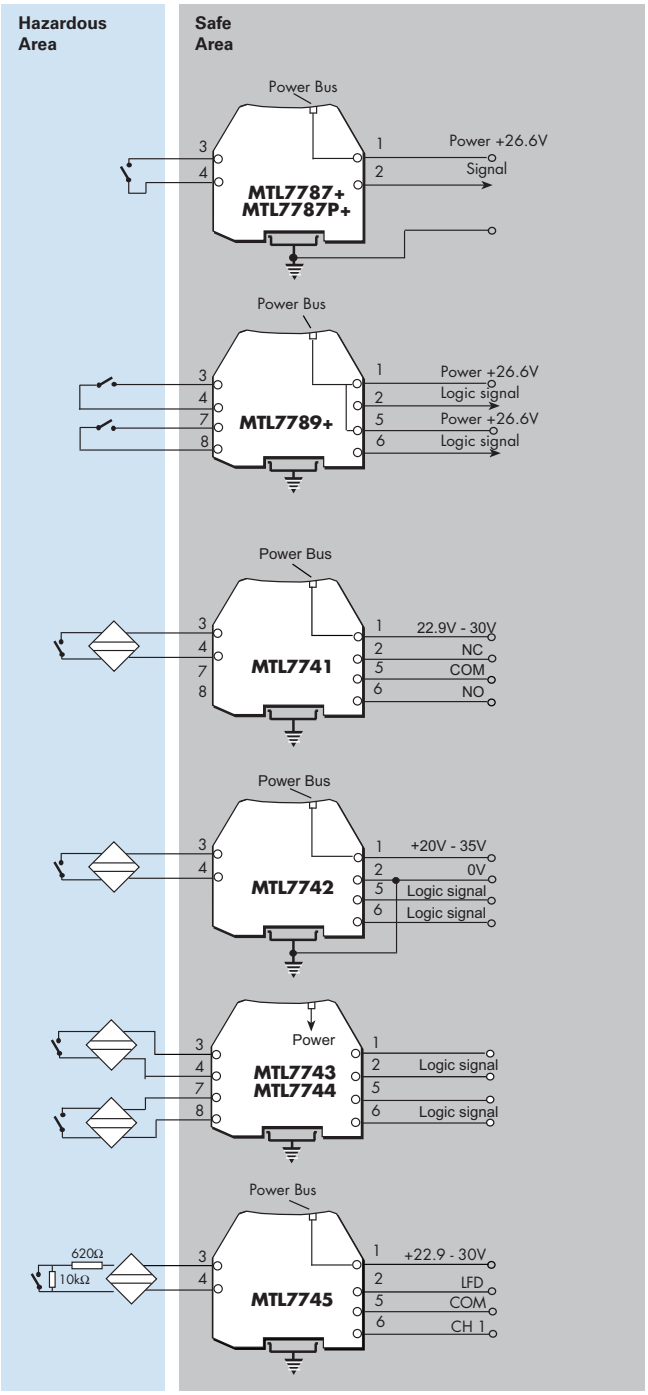

DIGITAL (ON/OFF) OUTPUTS

Alarms, LEDs, solenoids valves, etc
For these applications, the MTL7728+ is recommended. Higher-powered versions are available: the MTL7728P+ is suitable for IIC applications; the MTL7729P+ for IIB applications.

If the control switch is to earth, then the 2-channel MTL7787+ barrier should be used, or, alternatively, the MTL7787P+ higher-power version. If the supply is poorly regulated use the MTL7707+.

The MTL7707+ is recommended for applications where an unregulated supply of up to 35V is used.

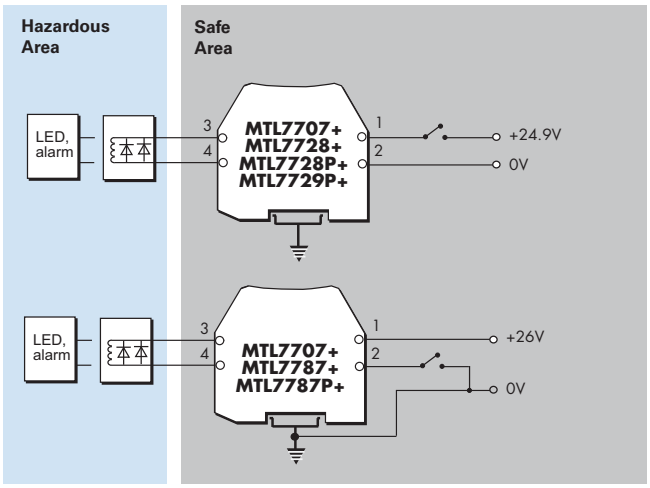

POSITIVE DC SYSTEMS

Low-level to 12V dc systems
The two channels of the MTL7764+ and MTL7767+ can be combined safely in IIC.

The MTL7764+ can be used for low-level logic return signals whilst the MTL7767+ is used for 6V dc and 12V dc systems.

18V dc systems
The single-channel MTL7722+ is recommended for 18V dc systems.

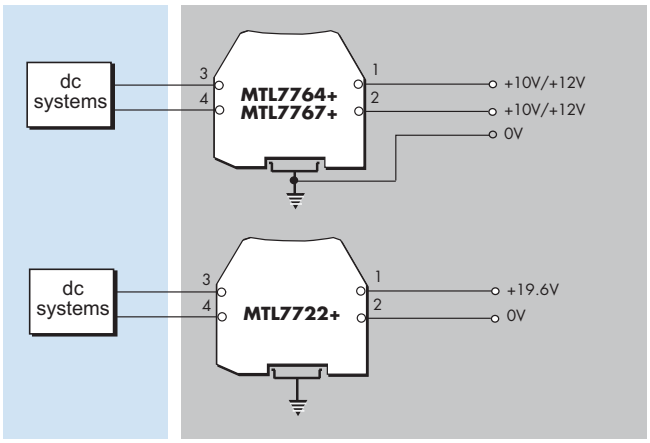

AC AND DC SYSTEMS

High-level ac and dc systems
The versatile star-connected MTL7765ac and MTL7778ac allow Vwkg to be developed from each channel to ground but only allow Vwkg to be developed between channels. This provides some common-mode voltage capability and can allow higher cable parameters to be used.

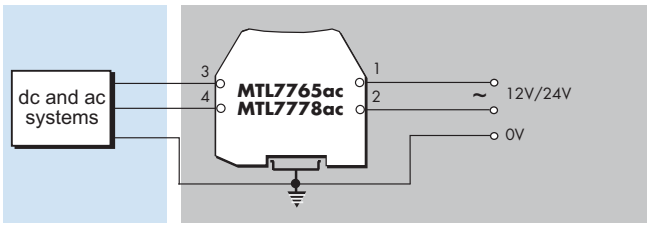

NEGATIVE AND FLOATING POWER SUPPLIES

Digital (on/off) outputs
The MTL7728– is used with a negative power supply and positive earth. Typically used for digital inputs or outputs, as shown.

The MTL7728-- can also be used with floating power supplies, for transmitters.

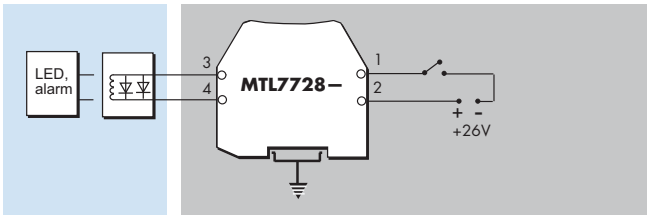

SPARE CABLE CORES AND SCREENS

The MTL7799 dummy barrier is used primarily for securing and earthing unused cables and screen connections. Hazardous area terminals 3 and 4 are internally connected to the DIN-rail mounting/earth connection. It also provides a power bus connection for direct connection of power for modules such as the MTL7743 and MTL7744 where no power supply screw terminal is provided.

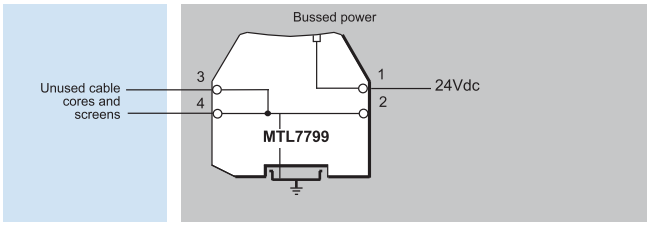

POWER BUS APPLICATIONS

The PB7700 power bus is invaluable for saving installation time and wiring when connecting a 24V dc power source to a number of barriers.

Typical applications include hazardous-area switches, 4/20mA transmitters and proximity detectors. The diagram illustrates the configuration for 4 barriers but up to 40 barriers can be served by this method.

The MTL7798 power feed module would normally be used with standard barriers such as MTL7787+ and MTL7787P+ because the current/voltage trip protection mechanism of the MTL7798 protects the fuses in the barriers.

The MTL7799 dummy barrier can be used instead of the MTL7798 for direct 'feed-through' connection of a 24V dc supply onto the power bus. Looping the power feed to each end of the bussed power allows the removal of individual barriers without loss of power to others in the chain.

Other units that can use the power bus facility:

- MTL7706
- MTL7707+
- MTL7707P+
- MTL7741
- MTL7742
- MTL7743
- MTL7744
- MTL7745
- MTL7787+
- MTL7787P+
- MTL7788+
- MTL7788R+
- MTL7789+

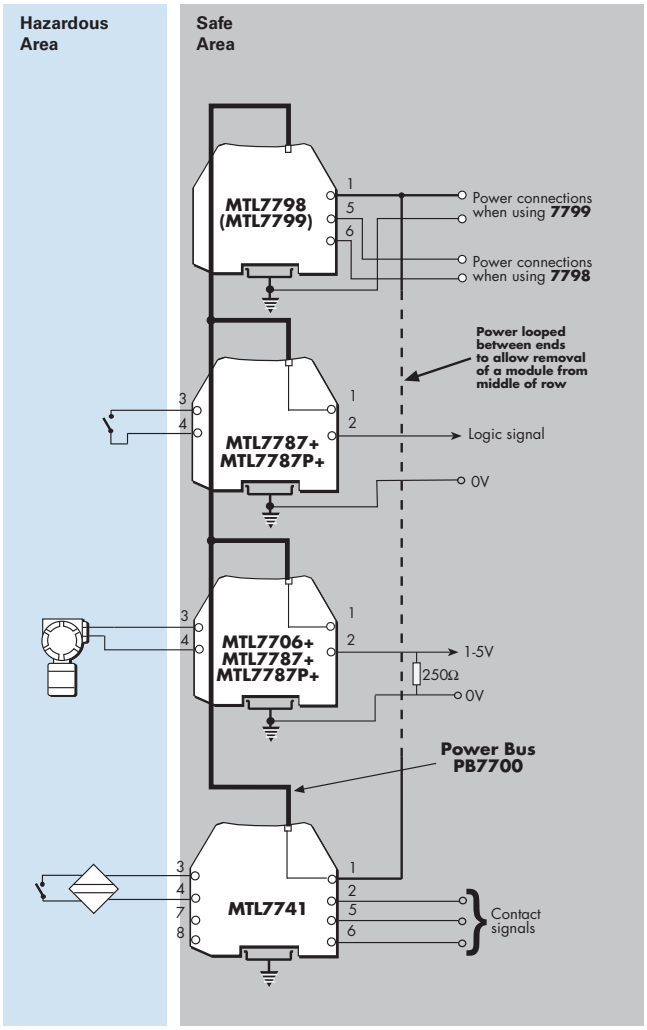



MTL7700 RANGE ACCESSORIES

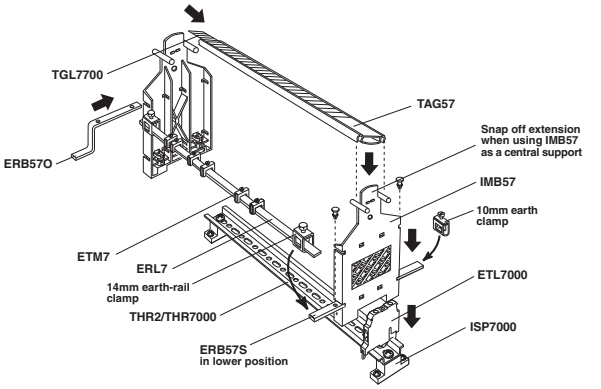

MOUNTING/EARTHING ACCESSORIES

MTL7700 range barriers mount easily and quickly onto standard DIN rail which also acts as the intrinsically safe earth.

THR2 standard DIN rail

THR7000 plated rail

Specially nickel-plated T-section (35mm x 7.5mm) DIN rail for use in potentially corrosive atmospheres. Supplied in 1meter lengths.

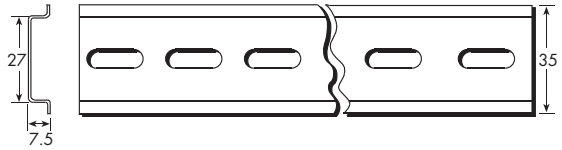

ISP7000 insulating spacers

Attached to the base of a DIN rail at either end or at intervals (depending upon DIN rail length) to isolate the IS earth from a structural earth.

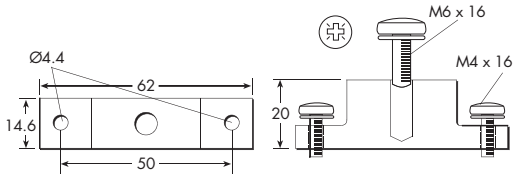

ERB57S Earth-rail bracket, straight

Nickel-plated; supplied with two push fasteners, one 14mm earth-rail clamp and one 10mm earth clamp for cables ≤16mm^2 (See ERB570).

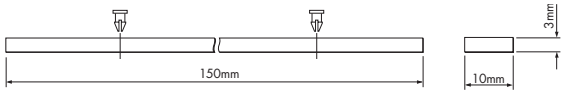

ETM7 earth terminal

For terminating cable screens and 0V earth returns and securing spare cores to the earth rail. A maximum of two ETM7s per barrier can be accommodated.

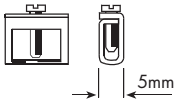

IMB57 Insulating mounting block

One required at each end of a tagging strip/earth rail. Suitable for low-profile (7.5mm) and high-profile (15mm) symmetrical DIN rail.

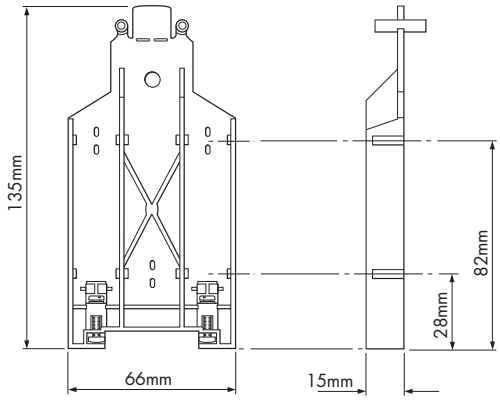

ERB57O Earth-rail bracket, offset

Nickel-plated; supplied with two push fasteners, one 14mm earth-rail clamp and one 10mm earth clamp for cables ≤16mm^2.

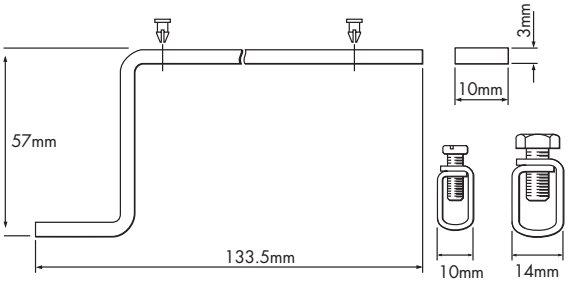

ETL7000 earth terminal

Provides connection for routing the IS earth from the DIN rail to an appropriate plant earth. Maximum cable cross-section is 10mm^2. Two recommended per discrete length of DIN rail. See instruction manual INM7700 for more details.

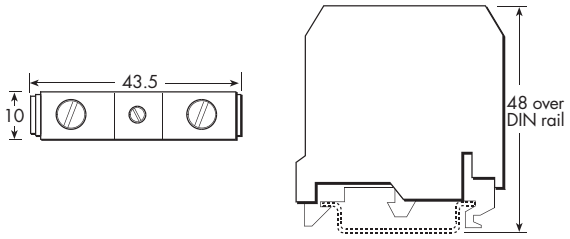

BPL7700 Power Bus link

When a number of barriers use a common power supply, the optional power link (BPL7700) can be used. Typical applications include hazardous area switches, solenoids and 4–20mA transmitters. The barriers it can be used with are the MTL7706, MTL7707+, MTL7787+, MTL7787P+, MTL7789P+ and MTL774X. See next page for further details.

TAGGING ACCESSORIES

Two methods of tagging are available which can be used separately or together:

1) **Individual barrier identification**
TH7700 barrier identifiers
TH7700 barrier identifiers are supplied clipped on to the tops of individual barriers to provide transparent holders for identification labels.

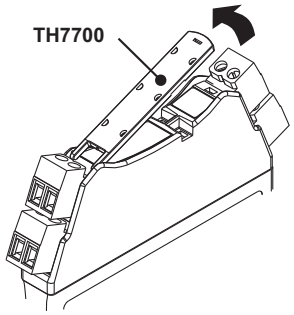

2) **Tagging strip method**
TAG57 Tagging strip, 1m length
Cut to size. Supplied with reversible tagging strip label suitable for either MTL5000 or MTL7000 range module spacing.

TGL7700 Tagging strip labels, set of 10 x 0.5m
For use with TAG57 tagging strip. Tags are reversible - one side for MTL7700, the other for MTL700.

MTL700 BUSBAR ACCESSORY

ADB700 Adaptor bracket, MTL7700
Tin-plated; supplied with two M4 screws and washers. For mounting an MTL7700 range barrier to an MTL700 busbar (EBB7).

Note: This is only to be used when the EBB7 is supported by IMB7 insulating mounting blocks, it should not be used with the smaller SMB7 mounting blocks.



HOW TO ORDER



MTL7700 barriers
Select by barrier number and polarity,
e.g. MTL7728+

Mounting accessories

THR2	Standard DIN-rail, 35 x 7.5mm
THR7000	T-section DIN-rail, specially-plated, 35 x 7.5mm, 1m length
ISP7000	Insulating spacer
ADB700	Adaptor bracket to convert MTL700

Standard earthing/earth-rail accessories

ETL7000	Earth terminal, DIN-rail mounted
IMB57	Insulating mounting block
ERB57S	Earth-rail bracket, straight
ERB57O	Earth-rail bracket, offset
ERL7	Earth rail, 1m length
ETM7	Earth terminal, pack of 50

Standard tagging accessories

TAG57	Tagging strip, 1m length
TGL7700	Tagging strip labels, set of 10 x 0.5m

Bussed power links

BPL7700	Pack of 100

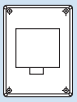

Enclosures

DX070	Enclosure, for MTL7700 x 5
DX170	Enclosure, for MTL7700 x 13

Spares (all in packs of 10)

SAF7712	Safe-area terminals 1 & 2
HAZ7734	Hazardous area terminals 3 & 4
SAF7756	Safe-area terminals 5 & 6
HAZ7778	Hazardous area terminals 7 & 8
TH7700	Tag holder



INM7700	Instruction manual, MTL7700 range
INA7700	ATEX information, MTL7700 range
INM57ENC	Instruction manual, MTL5000/7000 range Enclosures
CD7700...	Customer drawings

APPROVALS
(for the latest certificate information and cable parameters, see www.mtl-inst.com/certificates)

Region (Authority)	UK (BASEEFA)	UK (BASEEFA) Systems	USA (FM)	Canada/USA (CSA)	Japan (TIIS)
Standard	EN 60079-0:2012 EN 60079-11:2012	EN 50039	3600, 3610 entity 3611, 3810	CAN/CSA E60079 UL698, UL913, UL1604 IEC60079, C22.2	See Certificates
Approved for	[Ex ia Ga] IIC [Ex ia Ga] IIB ‡ [Ex ia Da] IIIC	Ex ia IIC Ex ia IIB ‡	AIS/I,II,III/1/Entity ABCDEFG- SCI-942; NI/I/2/ABCD/T4 [I/0] AEx[ia]IIC – SCI-942 Entity; NI/1/2/IIC/T4 Ta=60ºC except † where Ta=65ºC	Class 1, Div 2, Gps A,B, C,D; Ex nA [ia] IIC T4 Class 1, Zone 2, AEx nA IIC T4	Ex (ia) IIC Ex (ia) IIB ‡
Model No.	**Certificate No.**				
MTL7706+	BAS01ATEX7217	Ex01E2219	3010737	1345550	
MTL7707+	BAS01ATEX7217	Ex01E2219	3010737	1345550	
MTL7707P+	BAS01ATEX7218‡	Ex01E2220‡	3010737‡	1345550	
MTL7710+/-	BAS01ATEX7217	Ex01E2219	3010737	1345550	C16433
MTL7715+	BAS01ATEX7217	Ex01E2219	3010737	1345550	C16434
MTL7715P+	BAS01ATEX7217	Ex01E2219	3010737	1345550	C16611
MTL7722+/-	BAS01ATEX7217	Ex01E2219	3010737	1345550	C16435
MTL7728+/–/ac	BAS01ATEX7217	Ex01E2219	3010737	1345550	C16397
MTL7728P+	BAS01ATEX7217	Ex01E2219	3010737	1345550	C16436
MTL7729P+	BAS01ATEX7218‡	Ex01E2220‡	3010737‡	1345550	C16612‡
MTL7741	BAS01ATEX7217	Ex01E2219	3010737	1345550	C16613
MTL7742	BAS01ATEX7217	Ex01E2219	3010737	1345550	C16614
MTL7743	BAS01ATEX7217	Ex01E2219	3010737	1345550	C16615
MTL7744	BAS01ATEX7217	Ex01E2219	3010737	1345550	C16616
MTL7745	BAS01ATEX7217	Ex01E2219	3010737	1345550	C16617
MTL7751ac	BAS01ATEX7217				
MTL7755ac	BAS01ATEX7217	Ex01E2219	3010737†	1345550	C16450
MTL7756ac	BAS01ATEX7217	Ex01E2219	3010737†	1345550	C16437
MTL7758+/–	BAS01ATEX7217	Ex01E2219	3010737	1345550	C16618
MTL7760ac	BAS01ATEX7217	Ex01E2219	3010737	1345550	C16619
MTL7761ac	BAS01ATEX7217	Ex01E2219	3010737	1345550	C16438
MTL7761Pac	BAS01ATEX7217	Ex01E2219	3010737	1345550	
MTL7764+/-	BAS01ATEX7217	Ex01E2219	3010737	1345550	C16440
MTL7764ac	BAS01ATEX7217	Ex01E2219	3010737	1345550	C16441
MTL7765ac	BAS01ATEX7217	Ex01E2219	3010737	1345550	C16620
MTL7766ac	BAS01ATEX7217	Ex01E2219	3010737	1345550	C16442
MTL7766Pac	BAS01ATEX7217	Ex01E2219	3010737	1345550	C16443
MTL7767+	BAS01ATEX7217	Ex01E2219	3010737	1345550	C16444
MTL7778ac	BAS01ATEX7217	Ex01E2219	3010737	1345550	C16621
MTL7779+	BAS01ATEX7217	Ex01E2219	3010737	1345550	C16445
MTL7787+	BAS01ATEX7217	Ex01E2219	3010737	1345550	C16447
MTL7787P+	BAS01ATEX7217	Ex01E2219	3010737	1345550	C16448
MTL7788+	BAS01ATEX7217	Ex01E2219	3010737	1345550	C16449
MTL7788R+	BAS01ATEX7217	Ex01E2219	3010737	1345550	C16449
MTL7789+	BAS01ATEX7217	Ex01E2219	3010737	1345550	C16622
MTL7796+	BAS01ATEX7217	Ex01E2219	3010737	1345550	C16446
MTL7796–	BAS01ATEX7217	Ex01E2219	3010737	1345550	C16446
MTL7798			NI only		

Note: *For FM compliance, the MTL7700 range of barriers shall be installed in compliance with the enclosure, mounting, spacing and segregation requirements of the ultimate application.*

‡ *Certified to CENELEC IIB/FM Grps C-G only.*

† USA (FM) T_a = 65°C See "**Approved** for" above

CORRELATION BETWEEN MTL7700 — MTL7000 — MTL700 BARRIERS (IIC)

Module No.	Bussed Power	MTL7000 Equivalent	MTL7000 Original Certificate Number(s)	MTL7000 ATEX Certificate Number(s)	MTL700 equivalent	MTL700 Original Certificate Number(s)	MTL700 ATEX Certificate Number(s)	Typical Application
MTL7710+/-	No	Half of MTL7162+	Ex95C2261	BAS99ATEX7285	MTL710+/-	Ex832452	BAS01ATEX7202	4/6V Systems
MTL7715+	No	N/A	N/A	N/A	MTL715+	Ex832452	BAS01ATEX7202	12V Systems
MTL7715P+	No	N/A	N/A	N/A	MTL715P+	Ex92C2373	BAS01ATEX7202	12V Systems
MTL7722+/-	No	MTL7122+/-	Ex95C2261	BAS99ATEX7285	MTL722+/-	Ex832452	BAS01ATEX7202	General Purpose
MTL7728+/-	No	MTL7028+/- MTL7128+/-	Ex95C2261	BAS99ATEX7285	MTL728+/-	Ex832452	BAS01ATEX7202	Analogue / Digital
MTL7728ac	No	N/A	N/A	N/A	MTL728ac	Ex832452	BAS01ATEX7202	General Purpose
MTL7728P+	No	MTL7128P+	Ex95C2261	BAS99ATEX7285	MTL728P+	Ex92C2373	BAS01ATEX7202	Analogue / Digital
MTL7755ac	No	MTL7055ac	Ex95C2261	BAS99ATEX7285	MTL755ac	Ex832452	BAS01ATEX7202	RTD, Grounded
MTL7756ac	No	MTL7056ac	Ex95C2261	BAS99ATEX7285	N/A	N/A	N/A	RTD, Grounded
MTL7758+/-	No	N/A	N/A	N/A	MTL758	Ex83453	BAS01ATEX7217	Active sensors,
MTL7760ac	No	N/A	N/A	N/A	MTL760ac	Ex832452	BAS01ATEX7202	Active sensors, Thermocouples
MTL7761ac	No	MTL7261ac	Ex95C2261	BAS99ATEX7285	MTL761ac	Ex832452	BAS01ATEX7202	Strain Gauges
MTL7761Pac	No	MTL7061Pac MTL7161Pac	Ex95C2261	BAS99ATEX7285	MTL761Pac	Ex92C2373	BAS01ATEX7202	Load cell
MTL7764+/-	No	MTL7164+/-	Ex95C2261	BAS99ATEX7285	MTL764+/-	Ex832452	BAS01ATEX7202	High resistance
MTL7764ac	No	MTL7264ac	Ex95C2261	BAS99ATEX7285	MTL764ac	Ex832452	BAS01ATEX7202	Strain / Level Gauges
MTL7765ac	No	N/A	N/A	N/A	MTL765ac	Ex832452	BAS01ATEX7202	General Purpose
MTL7766ac	No	N/A	N/A	N/A	MTL766ac	Ex832452	BAS01ATEX7202	Strain Gauges
MTL7766Pac	No	MTL7066Pac MTL7166Pac	Ex95C2261	BAS99ATEX7285	MTL766Pac	Ex92C2373	BAS01ATEX7202	Strain Gauges
MTL7767+	No	MTL7167+	Ex95C2261	BAS99ATEX7285	MTL767+	Ex832452	BAS01ATEX7202	Dual MTL715
MTL7779+	No	N/A	N/A	N/A	MTL779+	Ex832452	BAS01ATEX7202	Dual MTL728
MTL7787+/-	Yes	MTL7087+ MTL7187+	Ex95C2261	BAS99ATEX7285	MTL787S+	Ex832452	BAS01ATEX7202	Analogue / Digital
MTL7787P+	Yes	MTL7087P+ MTL7187P+	Ex95C2261	BAS99ATEX7285	MTL787SP+	Ex92C2373	BAS01ATEX7202	Analogue / Digital
MTL7788+	Yes	N/A	N/A	N/A	MTL788+	Ex832452	BAS01ATEX7202	Transmitters
MTL7788R+	Yes	N/A	N/A	N/A	MTL788R+	Ex832452	BAS01ATEX7202	1—5V systems
MTL7796+/-	No	MTL7096- MTL7196-	Ex95C2261	BAS99ATEX7285	MTL796+/-	Ex832452	BAS01ATEX7202	Vibration sensors

The given data is only intended as a product description and should not be regarded as a legal warranty of properties or guarantee.
In the interest of further technical developments, we reserve the right to make design changes.

Powering Business Worldwide

Eaton Electric Limited,
Great Marlings, Butterfield, Luton
Beds, LU2 8DL, UK.
Tel: + 44 (0)1582 723633 Fax: + 44 (0)1582 422283
E-mail: mtlenquiry@eaton.com
www.mtl-inst.com

© 2018 Eaton
All Rights Reserved
Publication No.
EPS7700 Rev 13 010218

EUROPE (EMEA):
+44 (0)1582 723633 mtlenquiry@eaton.com
THE AMERICAS:
+1 800 835 7075 mtl-us-info@eaton.com
ASIA-PACIFIC:
+65 6 645 9888 sales.mtlsing@eaton.com

AHU-3:FILTER DP,BUILDING STATIC PRESS TRANSMITTER POWER SUPPLY

KELE DC POWER SUPPLY
DCP-1.5-W

DESCRIPTION

The **Kele DCP-1.5-W** is a regulated 1.5A power supply that accepts 24 VAC at the input and provides 24 VDC at the output. The **DCP-1.5-W** can be ordered with any output voltage from 1.5V to 27 VDC. Field voltage adjustments may also be made using only a screwdriver. The power supply is provided with a mounting track for easy field application. This low cost power supply features good regulation and has full overcurrent protection.

FEATURES

- ***Low cost***
- ***Regulated DC output***
- ***Snap-track mounted***
- ***Screw terminals with pressure plates***
- ***Adjustable DC output***
- ***Full-wave rectified***



DCP-1.5-W

APPLICATION

In general, the output current rating will be reduced by the ratio of the output voltage divided by the input voltage. For example, a 6 VDC supply powered by a 24 VAC transformer will have a reduced-rated output current of 375 mA. (6/24) x 1.5 = 0.375

To obtain the full-rated output current at reduced output voltages, the standard power supply input voltage must be reduced. It is a good practice to maintain the same AC input voltage as the desired DC output voltage.

A grounded DC minus terminal and a grounded secondary 24 VAC input transformer will blow the unit's fuse. If this is a problem, there are three possible solutions:

Option 1: Remove the ground on the transformer secondary to float the voltage output, or use a separate ungrounded transformer.

Option 2: Add a Model Y65G13-0 40 VA isolation transformer. This option reduces the power supply capacity to 920 mA.

Option 3: Remove diode D3 (marked on board). Jumper the VDC OUT (-) terminal to the VAC IN (G) terminal. The grounded side of the AC supply should be wired to the VAC IN (G) terminal. This option reduces the power supply capacity to 400 mA. (Sometimes call "1/2 wave" option)

DIMENSIONS / WIRING

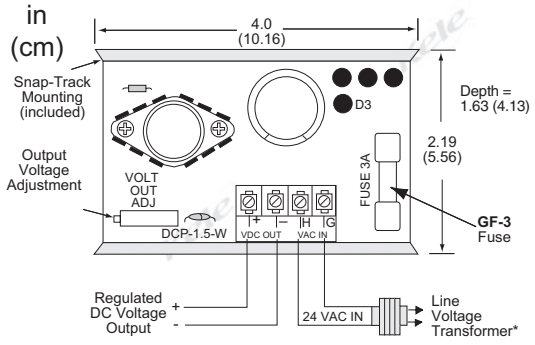

* Input Transformer Required VA Rating @ 24 VAC = 43.2 x Desired DC Output Current
For full 1.5A capacity, use a 75 VA transformer.

SPECIFICATIONS

Supply Voltage	24 VAC
Output Voltage	24 VDC (full wave rectified and regulated), Adjustable 1.5 - 27 VDC (full wave rectified and regulated)
Supply Frequency	50/60 Hz
Regulation	1.5% at full rated current
Output Current	1.5A (with 75 VA transformer)
Over Current Protection	3A fuse (GF-3)
Mounting	Snap track (included)
Temperature Stability	1%
Operating Temperature	32° to 130°F (0° to 55°C)
Operating Humidity	95% RH non-condensing
Dimensions	1.63"H x 2.19"W x 4.0"D (4.13 x 5.56 x 10.16 cm)
Weight	0.4 lb (0.18 Kg)
Warranty	1 year

ORDERING INFORMATION

MODEL	DESCRIPTION
DCP-1.5-W	Power supply, 24 VAC IN to 24 VDC OUT
DCP-1.5-W-C	Power supply, 24 VAC In to special DC output (Specify output voltage when ordering, 1.5-27 VDC)

AHU3: LOW TEMP SWITCH IN DOWNSTREAM OF HOT WATER COIL

EXPLOSION PROOF HIGH AND LOW LIMIT CONTROLS

HZLIM SERIES

DESCRIPTION

The **Kele HZLIM Series explosion proof high and low limit controls** are field-assembled combinations of industry standard controls, heavy duty explosion proof enclosures, and seals for use in atmospheres that may contain hazardous gases or dusts (Groups B, C, D, E, F).

The **HZLIM-LO-A** includes the ultra reliable A11A-1 manual reset low limit control, a **XJA7514C2M2M** explosion proof enclosure, two EYM-75 conduit seals, and an ACK6F fiber/cement kit.

The **HZLIM-LO-B** is identical to the **HZLIM-LO-A** but includes the equally reliable A11B-1 automatic reset low limit control instead of the A11A-1.

The **HZLIM-HI** is also identical to the **HZLIM-LO-A** but includes the time proven A70KA-1 manual reset high limit control in place of the A11A-1.



HZLIM Series

FEATURES

- ***Class I Division 1 Groups B, C, D***
- ***Class II Division 1 Groups E, F,G***
- ***NEMA 7BCD, 9EFG***
- ***Long life, snap acting contacts***
- ***Easy set point adjust***
- ***Freeze protection for hazardous locations***
- ***Code required AHU high limit protection for hazardous locations***

SPECIFICATIONS

Refer to the A70 and A11 Series in the Thermostats and Controllers section for specifications, capillary, installation and wiring information.

CAUTION: Conduit seal MUST be installed within code-required distance from junction box to maintain explosion proof rating. For Group B and C atmospheres, conduit seals must be installed within 2" (5.08 cm) of the enclosure regardless of less stringent code requirements.

WARNING: All circuits MUST be de-energized before opening the cover of this device for any purpose, including resetting a manual reset controller or adjusting a set point. If work must be performed with an energized circuit, the atmosphere inside and outside the enclosure must be proven safe with a listed intrinsically safe combustible gas detector.

DIMENSIONS

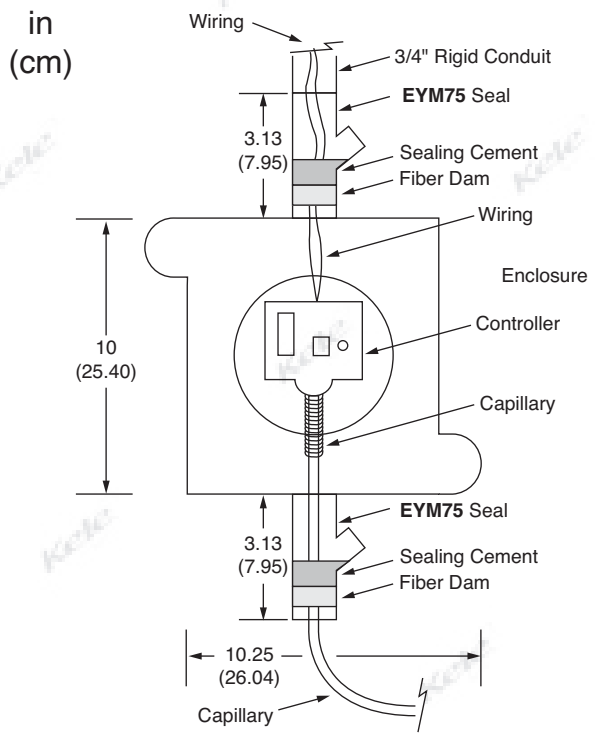

HAZARDOUS LOCATIONS

EXPLOSION PROOF HIGH AND LOW LIMIT CONTROLS

HZLIM SERIES

INSTALLATION / MOUNTING

OPERATION

Install the XJATS14C2M2N1 enclosure, included with each kit, in its intended location. Install the two EYM75 conduit seals in the two tapped holes of the XJATS14C2M2N1 enclosure, making sure to engage a minimum of five full threads. Also be sure that the plugs on the conduit seals are both facing up and to the front (cement will be poured into them later). The male nipple, supplied with fittings, can be easily removed and replaced in the opposite side for proper orientation.

Unpack the A11 or A70 controller, and fully uncoil the capillary tubing. Place plastic bushings in both openings inside the enclosure and also in the bottom of the lower conduit seal. Gently feed the end of the capillary (or capillary and bulb) through the bottom opening and conduit seal from inside the XJATS14C2M2N1 enclosure, taking care not to nick or kink the capillary. Once the end is out, slowly feed the rest of the capillary fully through to the outside of the conduit seal. Use an assistant, if needed, to make sure that the inner and outer plastic bushings stay in place to protect the capillary from damage. Once this is accomplished, mount the A11 or A70 controller to the panel inside the enclosure. Install the capillary (or capillary and bulb) on the equipment according to the included instructions. Install rigid conduit and wiring as required by code from the upper conduit seal, engaging a minimum of five full threads at each joint. Only individual insulated conductors may pass through the conduit seal. If jacketed cable is used, the jacket must be stripped back beyond the seal or else a listed cable seal must be applied within the enclosure. Remove the plugs from the two conduit seals. Make sure that the wires and capillary are centered in the seals. Then install fiber dams and sealing compound in each according to the included instructions (minimum 0.75"/2 cm cement depth), and replace the plugs. Adjust the setpoint on the controller, install the cover for the XJATS14C2M2N1 enclosure, and tighten securely.

ORDERING INFORMATION

MODEL	DESCRIPTION
HZLIM-HI	Kit with one A70KA-1 manual reset high limit control, one XJATS14C2M2N1 enclosure, two EYM75 conduit seals, three plastic conduit bushings, and one ACK6F sealing kit Weight: 26.9 lb (12.2 kg)
HZLIM-LO-A	Kit with one A11A-1 manual reset low limit control, one XJATS14C2M2N1 enclosure, two EYM75 conduit seals, three plastic conduit bushings, and one ACK6F sealing kit Weight: 25.7 lb (11.7 kg)
HZLIM-LO-B	Kit with one A11B-1 automatic reset low limit control, one XJATS14C2M2N1 enclosure, two EYM75 conduit seals, three plastic conduit bushings, and one ACK6F sealing kit Weight: 25.7 lb (11.7 kg)

RELATED PRODUCTS

ACK6F	Cement: 1.9 lb * (0.85kg) Fiber: 0.3 lb (0.19 kg), 25 cu in (410 cu cm) volume when set * Consists of five 0.4 lb (0.19 kkg) cement pouches
EYM-75	3/4" size, 1.19" turning radius, 2 oz Kwiko cement required, Malleable Iron construction

MANUAL TIME SWITCH
93000 SERIES

HRV-1: TIMER SWITCH FOR LOCAL OVERRIDE

DESCRIPTION

The **Marktime 93000 Series wall box time switch** is a spring wound, manually set time switch for the control of electrical current. Interchangeable with standard toggle switches to turn circuits either off or on at the end of a preset time period, the **93000 Series** is ideally suited for new installations or retrofit projects.



93504C

MH RHODES CRAMER COMPANY

c UL us

FEATURES

- ***White and ivory plates and knobs included***
- ***Time range from minutes to 12 hours***
- ***Wwo-wire design to fit standard single-gang box***
- ***20 Amp Resistive & 1 hp Capability***
- ***Optional "Hold" models available***

SPECIFICATIONS

Supply Voltage	125/277VAC, 50/60Hz Not Required to operate Spring return count down timer
Operation	Manually Twist past mark to desired time, On activation both contacts transfer from normal
Relay Output Configuration	2-SPST, 1-N.O. and 1-N.C
Contact Current	
Resistive	20A @125 VAC, 10A @277VAC
Ballast	Do not use with Ballasts
Tungsten	7A Tungsten @125 VAC
FAN	1 Hp @125 VAC
Manual Override	Hold on some models
Clock Accuracy	± 5% of set time
Special Functions	
93351XC	HOLD closed in the "ON" position Full Metal faceplate
Indicators	None
Timers	0-(15, 30, 60, 120) minutes or 0-(4, 6, 12) hours
Operating Temperature	-40 to 120 (-40 to 49)
Operating Humidity	5% to 95% Non-condensing
Wiring Terminations	Terminals, 12 AWG
Mounting	Vertical, Single gang switch box (not included)
Color	Plastic plate in Ivory and White included
Enclosure Rating	NEMA 1
Dimensions	1.8"W x 3.8"H x 1.2"D (4.5 x 9.7 x 3.1 cm) Knob 0.75" from faceplate
Weight	0.4 lb (0.18 Kg)
Approvals	UL Listed, File E13151
Warranty	1 year

WIRING

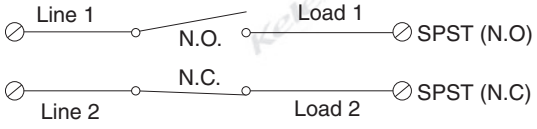

Note: For SPDT operation, install jumper wire from Line 1 terminal to the Line 2 terminal

DIMENSIONS

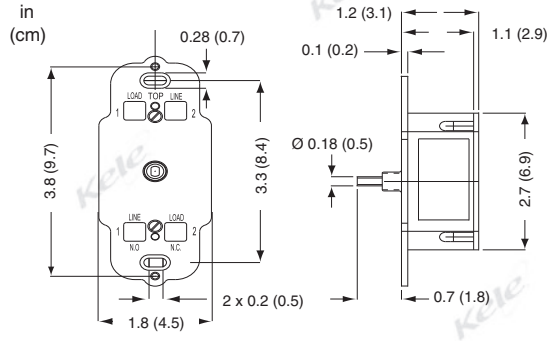

ORDERING INFORMATION

MODEL	DESCRIPTION	MODEL	DESCRIPTION
93501C	0-15 min. timer includes knob and trim plate	**93506C**	0-12 hr. timer includes knob and trim plate
93502C	0-30 min. timer includes knob and trim plate	**93507C**	0-4 hr. timer includes knob and trim plate
93503C	0-60 min. timer includes knob and trim plate	**93513C**	0-60 min. timer with Hold, includes knob and trim plate
93504C	0-120 min. timer includes knob and trim plate	**93516C**	0-12 hr. timer with Hold, includes knob and trim plate
93505C	0-6 hr. timer includes knob and trim plate		

Advanced Application Field Equipment Controller (FAC) Catalog Page

GENERATOR CONTROLLER: AS REAL TIME CONTROL

Code No. LIT-1900759
Issued June 2018

Refer to the QuickLIT website for the most up-to-date version of this document.

The Advanced Application Field Equipment Controller (FAC) Series Controllers are programmable controllers that can communicate using BACnet/IP, MS/TP, or N2 communications protocols, depending on the model. The FAC4911 is a BACnet® Advanced Application Controller (B-AAC) that communicates using BACnet/IP communications protocol. The FAC2513 and the FAC3613 communicate using the BACnet MS/TP protocol. The other FAC Series controllers can be switched between MS/TP and N2 communication protocols. FAC controllers used as MS/TP devices are B-AACs with integral RS-485 MS/TP communications.

FAC Series Controllers feature an integral real-time clock. FACs support time-based tasks and maintain time-based control, which enables these field controllers to monitor and control schedules, calendars, alarms, and trends. FACs can continue time-based control and monitoring when offline for extended periods of time from a *Metasys*® system network.

FAC Series Controllers can also operate as stand-alone controllers in applications that do not require a networked supervisory device or for network applications where it is preferred to have the scheduling, alarming, and/or trending performed locally in the field controllers.

The FAC4911 controllers operate on BACnet/IP networks and integrate into Johnson Controls® and third-party systems.

The FAC3611 and FAC3613 models include a fast persistence feature that allows data values to be held at a configurable value, up to once per second. Persistence refers to how often samples of data are stored locally. In the event of a problem, such as a loss of power, data can be retrieved up to the rate that the data is persisted, minimizing the potential loss of data. When power is restored, previously persisted data, up to the rate of persistence, remains available and accessible. For example, if persistence is configured for once per second, you only risk losing one second of data. Persisting data may be essential for situations that require greater data accuracy, including certain methods of utility data collection and billing.

The FAC2612 controller features line-voltage relay outputs, which makes this controller well-suited for use in terminal units. The FAC2612-2 model uses a line-voltage power supply, which eliminates the need for a 24 VAC transformer in line-voltage applications.

The FAC2611, FAC2612, and FAC3611 controllers using the MS/TP protocol support wireless communications using the ZFR or ZFR Pro Series accessories and the WRZ-7860 One-to-One Receiver.

Important:	You cannot purchase a similar third-party device and install it in a UL/cUL Listed smoke control system. Doing so voids the UL/cUL Smoke Control Listing. Third-party devices must be provided and labeled by the factory as described in the UL/cUL Smoke Control Listing.

Important:	Only those Johnson Controls products identified for use in smoke control applications have been tested and listed by UL for use in a *Metasys* system UL/cUL 864 10th Edition UUKL/ORD-C100-13 UUKLC Smoke Control System. Installation of a product that is not UL/cUL Listed and labeled for this application prevents the entire system from being UL/cUL Listed for smoke control.

Refer to the *Metasys® System Field Equipment Controllers and Related Products Product Bulletin (LIT-12011042)* for product application details.

If the product fails to operate within its specifications, replace the product. For a replacement product, contact the nearest Johnson Controls® representative.

Figure 1: Advanced Application Field Equipment Controllers (FACs)



Features

- **Switchable Communications Protocols**—Provides flexibility with a choice between BACnet MS/TP and N2 communication.
- **Standard BACnet® Protocol**—Provides interoperability with other Building Automation System (BAS) products that use the widely accepted BACnet standard.
- **Standard Hardware and Software Platform**—Uses a common hardware design throughout the family line to support standardized wiring practices and installation workflows. Also uses a common software design to support use of a single tool for control applications, commissioning, and troubleshooting to minimize technical training.
- **ZFR Wireless Field Controller (FC) or Sensor/Actuator (SA) Bus Interface**—Provides a wireless alternative to hard-wired *Metasys*® system counterparts with either the ZFR1800 Series Wireless Bus or the WNC1800/ZFR182x Pro Series Wireless Field Bus (ZFR Pro), offering application flexibility and mobility with minimal disruption to building occupants.
- **Bluetooth® Wireless Commissioning**—Provides an easy-to-use connection to the configuration and commissioning tool.
- **Auto-Tuned Control Loops**—Reduce commissioning time, eliminate change-of-season re-commissioning, and reduce wear and tear on mechanical devices.
- **Universal Inputs, Configurable Outputs, and Point Expansion Modules**—Allows multiple signal options to provide input/output flexibility.
- **BACnet® Testing Laboratories (BTL) Listed**—Ensures interoperability with other BTL-listed devices. BTL is a third-party agency, which validates that BAS vendor products meet the BACnet industry-standard protocol.
- **32-bit Microprocessor**—Ensures optimum performance and meets industry specifications.

- **BACnet Automatic Discovery**—Supports easy controller integration into a *Metasys* BAS.
- **End-of-Line (EOL) Switch in MS/TP Field Controllers** — Enables field controllers to be terminating devices on the communications bus.
- **Pluggable Communications Bus and Supply Power Terminal Blocks**—Expedites installation and troubleshooting.
- **Writable Flash Memory**—Allows standard or customized applications to be downloaded from the Controller Configuration Tool (CCT) and enables persistent application data.
- **DIS17 Remote Display and the MAP Gateway Support** — Enable monitoring and commanding of I/O and configuration parameters

Table 1: FAC Series Model Information (Including Point Type Counts)

		FAC2513[1]	FAC2611	FAC2612	FAC3611	FAC3613[1]	FAC4911[2]
Communication Protocol		BACnet MS/TP	BACnet MS/TP, N2			BACnet MS/TP	BACnet/IP
Engines Supported		All Model types. Some NIE models support MS/TP and N2 devices. Refer to the *Network Engines Product Bulletin (LIT-12012138)* for details.					NAE55, NAE85, ODS[2]
Modular Jacks		6-pin SA Bus Modular Port supports one communicating sensor. **Or** you can wire up to four communicating sensors to the SA Bus Terminal Block. They cannot be used at the same time.					
			6-pin FC Bus for tool support				
Point Types	**Signals Accepted**						
Universal Input (UI)	Analog Input, Voltage Mode, 0–10 VDC Analog Input, Current Mode, 4–20 mA Analog Input, Resistive Mode, 0–2k ohm, resistance temperature detector (RTD) (1k NI [Johnson Controls], 1k PT, A99B SI), negative temperature coefficient (NTC) (10k Type L, 2.252k Type 2) Binary Input, Dry Contact Maintained Mode	4 (Current Mode not supported)	6	5	8	8	10
Binary Input (BI)	Dry Contact Maintained Mode Pulse Counter/Accumulator Mode (High Speed), 100 Hz	6	2	4	6	6	6
Analog Output (AO)	Analog Output, Voltage Mode, 0–10 VDC Analog Current Mode, 4–20 mA	2 (Current Mode not supported)	2		6	6	4
Binary Output (BO)	24 VAC Triac	2 (External Power only)	3		6	6	4
Configurable Output (CO)	Analog Output, Voltage Mode, 0–10 VDC Binary Output Mode, 24 VAC Triac	2	4	4			4
Relay Output (RO)	RO: Single-Pole, Double-Throw (SPDT) RO: Single-Pole, Single-Throw (SPST)			2 - SPDT and 3 - SPST line-voltage relays, 1/4 hp 120 VAC, 1/2 hp 240 VAC			

1 This model is currently only available in Asia. Contact your local Johnson Controls representative for more information.
2 FAC4911 supports R9.0 or later versions of these engines.

Table 2: FAC Series Ordering Information

Product Code Number	Description
MS-FAC2513-0[1]	16-Point Advanced Application Field Equipment Controller with 4 UI, 6 BI, 2 CO, 2 BO, and 2 AO; 24 VAC; SA Bus; FC Bus; Integral Real-time Clock
MS-FAC2611-0	17-Point Advanced Application Field Equipment Controller with 6 UI, 2 BI, 4 CO, 3 BO, and 2 AO; 24 VAC; SA Bus; FC Bus; Integral Real-time Clock
MS-FAC2612-1	18-Point Advanced Application Field Equipment Controller with 5 UI, 4 BI, 4 CO, 2 SPDT and 3 SPST Line-Voltage ROs 1/4 hp 120 VAC, 1/2 hp 240 VAC; 24 VAC; SA Bus; FC Bus; Integral Real-time Clock;
MS-FAC2612-2	18-Point Advanced Application Field Equipment Controller with 5 UI, 4 BI, 4 CO, 2 SPDT and 3 SPST Line-Voltage ROs, 1/4 hp 120 VAC, 1/2 hp 240 VAC; 100–240 VAC; SA Bus; FC Bus; Integral Real-time Clock
MS-FAC3611-0	26-Point Advanced Application Field Equipment Controller with 8 UI, 6 BI, 6 BO, and 6 AO; 24 VAC; SA Bus; FC Bus; Integral Real-time Clock; Improved Fast Persistence

Table 2: FAC Series Ordering Information

Product Code Number	Description
MS-FAC3613-0[1]	26-Point Advanced Application Field Equipment Controller with 8 UI, 6 BI, 6 BO, and 6 AO; 24 VAC; SA Bus; FC Bus; Integral Real-time Clock; Improved Fast Persistence
MS-FAC4911-0	28-Point Advanced Application Field Equipment Controller with 10 UI, 6 BI, 4 BO, 4 AO, and 4 CO; 24 VAC; SA Sensor Port; Integral Real-time Clock; 2 Ethernet Ports for BACnet/IP Communications

1 This model is currently only available in Asia. Contact your local Johnson Controls representative for more information.

Table 3: FAC Series for Smoke Control Ordering Information

Product Code Number[1,2]	Description
MS-FAC2611-0U	17-Point Advanced Application Field Equipment Controller with 6 UI, 2 BI, 3 BO, 2 AO, and 4 CO; 24 VAC, MS/TP (FC) Bus, SA Bus, integral real-time clock
MS-FAC2612-1U	18-Point Advanced Application Field Equipment Controller with 5 UI, 4 BI, 4 CO, 2 SPDR RO, and 3 SPST RO; 24 VAC, MS/TP (FC) Bus, SA Bus, integral real-time clock

1 These devices are UL/ULC 864 Listed, File S4977, 10th Edition UUKL/ORD-C100-13 UUKLC Smoke Control System. These devices must be ordered in a Smoke Control UUKL listing.
2 You cannot purchase a similar third-party device and install it in a UL/cUL Listed smoke control system. Doing so voids the UL/cUL Smoke Control Listing. Third-party devices must be provided and labeled by the factory as described in the UL/cUL Smoke Control Listing.

Accessories

Table 4: FAC Accessories

Product Code Number	Description
Mobile Access Portal (MAP) Gateway[1]	Refer to the *Mobile Access Portal Gateway Catalog Page (LIT-1900869)* to identify the appropriate product for your region.
MS-BTCVT-1[1]	Wireless Commissioning Converter with Bluetooth Technology
MS-BTCVTCBL-700[1]	Cable Replacement Set for the MS-BTCVT-1 or the NS-ATV7003-0; Includes One 5 ft (1.5 m) Retractable Cable
MS-DIS1710-0	Local Controller Display: Refer to *Local Controller Display Product Bulletin (LIT-12011273)* for more information.
NS Series Network Sensors	Refer to the *NS Series Network Sensors Product Bulletin (LIT-12011574)* for specific sensor model descriptions.
WRZ Series Wireless Room Sensors[1]	Refer to the *WRZ Series Wireless Room Sensors Product Bulletin (LIT-12011653)* for specific sensor model descriptions.
WRZ-7860-0[1]	Receiver for One-to-One Wireless Room Sensing Systems - functions with WRZ Series Sensors room sensors
WRZ-SST-120[1]	Wireless System Survey Tool
ZFR1800 Series Wireless Field Bus System[1]	This system is used for installations that only support BACnet MSTP. Refer to the *WNC1800/ZFR182x Pro Series Wireless Field Bus System Product Bulletin (LIT-12012320)* for a list of available products.
ZFR-USBHA-0[1]	USB Dongle with ZFR Driver provides a wireless connection through CCT to allow wireless commissioning of the wirelessly enabled FEC, FAC, IOM, and VMA16 controllers. Also allows use of the ZFR Checkout Tool (ZCT) in CCT. **Note:** The ZFR-USBHA-0 replaces the IA OEM DAUBI_2400 ZFR USB dongle. For additional information on the ZFR-USBHA-0 ZFR dongle, refer to the *ZFR1800 Series Wireless Field Bus System Technical Bulletin (LIT-12011295)* or *ZFR1800 Series Wireless Field Bus System Quick Reference Guide (LIT-12011630)*.
Y64T15-0[1]	Transformer, 120/208/240 VAC Primary to 24 VAC Secondary, 92 VA, Foot Mount, 30 in. Primary Leads and 30 in. Secondary Leads, Class 2
Y65A13-0[1]	Transformer, 120 VAC Primary to 24 VAC Secondary, 40 VA, Foot Mount (Y65AS), 8 in. Primary Leads and 30 in. Secondary Leads, Class 2
Y65T42-0[1]	Transformer, 120/208/240 VAC Primary to 24 VAC Secondary, 40 VA, Hub Mount (Y65SP+), 8 in. Primary Leads and Secondary Screw Terminals, Class 2
Y65T31-0[1]	Transformer, 120/208/240 VAC Primary to 24 VAC Secondary, 40 VA, Foot Mount (Y65AR+), 8 in. Primary Leads and Secondary Screw Terminals, Class 2
AP-TBK4SA-0	Replacement MSTP SA Bus Terminal, 4-Position Connector, Brown (Bulk Pack of 10)
AP-TBK4FC-0	Replacement MSTP FC Bus Terminal, 4-Position Connector (Bulk Pack of 10)
AP-TBK3PW-0	Replacement Power Terminal, 3-Position Connector, Gray (Bulk Pack of 10)
AS-CBLTSTAT-0	Cable adapter for connection to 8-pin TE-6700 Series sensors
MS-TBKLV03-0	Terminal Block Kit - FAC Line Voltage AC Power - 3 Pieces
MS-TBKRO02-0	Terminal Block Kit - FAC 2-Position Relay Output - 9 Pieces
MS-TBKRO03-0	Terminal Block Kit - FAC 3-Position Relay Output - 6 Pieces
MS-TBKCO04-0	Terminal Block Kit - FAC 4-Position Configurable Output - 6 Pieces
MS-TBKUI04-0	Terminal Block Kit - FAC 4-Position Universal Input - 3 Pieces

Table 4: FAC Accessories

Product Code Number	Description
MS-TBKUI05-0	Terminal Block Kit - FAC 5-Position Universal Input - 3 Pieces
TL-BRTRP-0[1]	Portable BACnet/IP to MSTP Router

1 This accessory is not qualified for use with a UL 864 UUKL/UUKLC 10th Edition Listed Smoke Control system.

FAC Series Technical Specifications

Table 5: FAC Series

Product Code Numbers	**MS-FAC2513-0**[1]: 16-Point FAC with Integral Real-Time Clock and 24 VAC Supply Power **MS-FAC2611-0**: 17-Point FAC with Integral Real-Time Clock and 24 VAC Supply Power **MS-FAC2612-1**: 18-Point FAC with Integral Real-Time Clock and 24 VAC Supply Power **MS-FAC2612-2**: 18-Point FAC with Integral Real-Time Clock and 100–240 VAC Supply Power **MS-FAC3611-0:** 26-Point FAC with Integral Real-Time Clock and 24 VAC Supply Power with Fast Persistence **MS-FAC3613-0**[1]**:** 26-Point FAC with Integral Real-Time Clock and 24 VAC Supply Power with Fast Persistence **MS-FAC4911-0:** 28-Point FAC with Integral Real-Time Clock and 24 VAC Supply Power; Communicates over BACnet/IP network
	Smoke Control Models: **MS-FAC2611-0U**: 17-Point FAC with Integral Real-Time Clock and 24 VAC Supply Power **MS-FAC2612-1U**: 18-Point FAC with Integral Real-Time Clock and 24 VAC Supply Power
Communications Protocol	**MS-FAC2513-0**[1] **and MS-FAC3613-0**[1]**:** BACnet MS/TP **MS-FAC2611-0, MS-FAC2612-1, MS-FAC2612-2, and MS-FAC3611-0:** BACnet MS/TP, N2 **MS-FAC4911-0**: BACnet/IP
Engines Supported	**MS-FAC2513-0**[1]**, MS-FAC2611-0, MS-FAC2612-1, MS-FAC2612-2, MS-FAC3611-0,, and MS-FAC3613-0**[1]**:** All Models **MS-FAC4911-0:** NAE55, NAE85, ODS[2]
Supply Voltage	**MS-FAC2513-0**[1]**, MS-FAC2611-0, MS-FAC2612-1, MS-FAC3611-0, MS-FAC3613-0**[1]**, and MS-FAC4911-0:** 24 VAC (nominal, 20 VAC minimum/30 VAC maximum), 50/60Hz, Power Supply Class 2 (North America), SELV (Europe) **MS-FAC2612-2:** 100–240 VAC 50/60 Hz
Power Consumption	**MS-FAC2513-0**[1]**, MS-FAC2611-0, MS-FAC3611-0, MS-FAC3613-0**[1]**, and MS-FAC4911-0:** 14 VA maximum **MS-FAC2612-1:** 30 VA maximum **MS-FAC2612-2:** 40 VA maximum **Note:** VA ratings do not include any power supplied to the peripheral devices connected to Binary Outputs (BOs) or Configurable Outputs (COs), which can consume up to 12 VA for each BO or CO, for a possible total consumption of an additional 84 VA (maximum).
Ambient Conditions	**Operating:** 0 to 50°C (32 to 122°F), 10 to 90% RH noncondensing; Pollution Degree 2 **Storage:** -40 to 80°C (-40 to 176°F), 5 to 95% RH noncondensing
Controller Addressing	**For BACnet MS/TP-configured controllers:** DIP switch set; valid field controller device addresses 4–127 (device addresses 0–3 and 128–255 are reserved) **For BACnet/IP controllers:** 3 rotary switches to assign unique number for each controller on the subnet to identify it in the Controller Tool for uploading, downloading, and commissioning **For N2-configured controllers:** DIP switch set; valid control device addresses 1–255

Table 5: FAC Series

Communications Bus	**RS-485, field selectable between BACnet MS/TP and N2 communications on certain models:** • 3-wire FC Bus between the supervisory controller and field controllers • 4-wire SA Bus between field controller, network sensors, and other sensor/actuator devices, includes a lead to source 15 VDC supply power (from field controller) to bus devices. **MS-FAC4911-0:** • BACnet/IP over Ethernet cable • 4-wire SA Bus between field controller, network sensors, and other sensor/actuator devices, includes a lead to source 15 VDC supply power (from field controller) to bus devices.
Processor	**MS-FAC2611-0, MS-FAC2612-1, and MS-FAC2612-2 :** H8SX/166xR Renesas® microcontroller **MS-FAC3611-0:** RX630 32-Bit Renesas microcontroller **MS-FAC2513-0[1] and MS-FAC3613-0[1]**: RX631 32-Bit Renesas microcontroller **MS-FAC4911-0:** RX63N 32-Bit Renesas microcontroller
Memory	**MS-FAC2611-0, MS-FAC2612-1, MS-FAC2612-2, and MS-FAC3611-0:** 4 MB Flash Memory and 1 MB RAM **MS-FAC2513-0[1]and MS-FAC3613-0[1]**: 16 MB Flash Memory and 8 MB SDRAM **MS-FAC4911-0:** 16 MB Flash Memory and 8 MB RAM
Input and Output Capabilities	**MS-FAC2513-0[1]:** 4 - Universal Inputs: Defined as 0–10 VDC, 0–600k ohm, or Binary Dry Contact 6 - Binary Inputs: Defined as Dry Contact Maintained or Pulse Counter/Accumulator Mode 2 - Analog Outputs: Defined as 0–10 VDC 2 - Binary Outputs: Defined as 24 VAC Triac (external power source only) 2 - Configurable Outputs: Defined as 0–10 VDC or 24 VAC Triac BO **MS-FAC2611-0:** 6 - Universal Inputs: Defined as 0–10 VDC, 4–20 mA, 0–600k ohm, or Binary Dry Contact 2 - Binary Inputs: Defined as Dry Contact Maintained or Pulse Counter/Accumulator Mode 2 - Analog Outputs: Defined as 0–10 VDC or 4–20 mA 3 - Binary Outputs: Defined as 24 VAC Triac (selectable internal or external source power) 4 - Configurable Outputs: Defined as 0–10 VDC or 24 VAC Triac BO **MS-FAC2612-1 and MS-FAC2612-2:** 5 - Universal Inputs: Defined as 0–10 VDC, 4–20 mA, 0–600k ohm, or Binary Dry Contact 4 - Binary Inputs: Defined as Dry Contact Maintained or Pulse Counter/Accumulator Mode 4 - Configurable Outputs: Defined as 0–10 VDC or 24 VAC Triac BO 2 - Relay Outputs (Single-Pole, Double-Throw): UL 916: 1/4 hp 120 VAC, 1/2 hp 240 VAC; 360 VA Pilot Duty at 120/240 VAC (B300); 3 A Non-inductive 24–240 VAC; EN 60730: 6 (4) A N.O. or N.C. only 3 - Relay Outputs (Single-Pole, Single-Throw): UL 916:1/4 hp 120 VAC, 1/2 hp 240 VAC; 360 VA Pilot Duty at 120/240 VAC (B300); 3 A Non-inductive 24–240 VAC; EN 60730: 6 (4) A N.O. or N.C. only **MS-FAC3611-0 and MS-FAC3613-0[1]:** 8 - Universal Inputs: Defined as 0–10 VDC, 4–20 mA, 0–600k ohms, or Binary Dry Contact 6 - Binary Inputs: Defined as Dry Contact Maintained or Pulse Counter/Accumulator Mode 6 - Binary Outputs: Defined as 24 VAC Triac (external power source only) 6 - Analog Outputs: Defined as 0–10 VDC or 4–20 mA **MS-FAC4911-0:** 10 - Universal Inputs: Defined as 0–10 VDC, 0–600k ohms, or Binary Dry Contact 6 - Binary Inputs: Defined as Dry Contact Maintained or Pulse Counter/Accumulator Mode 4 - Binary Outputs: Defined as 24 VAC Triac (external power source only) 4 - Analog Outputs: Defined as 0–10 VDC or 4–20 mA 4 - Configurable Outputs: Defined as AO mode , 0–10 VDC or BO mode, 24 VAC Triac

Table 5: FAC Series

Analog Input/Analog Output Resolution and Accuracy	Analog Input: 15-bit resolution Analog Output: 15-bit resolution, +/- 200 mV accuracy in 0–10 VDC applications
Terminations	**MS-FAC2513-0**[1]: Input/Output: Fixed Screw Terminal Blocks FC Bus, SA Bus and Supply Power: 3-wire and 4-wire Pluggable Screw Terminal Blocks SA Bus Port: RJ-12 6-pin Modular Jacks **MS-FAC2611-0, MS-FAC3611-0, and MS-FAC3613-0**[1]**:** Input/Output: Fixed Screw Terminal Blocks FC Bus, SA Bus and Supply Power: 3-wire and 4-wire Pluggable Screw Terminal Blocks FC Bus and SA Bus Port: RJ-12 6-pin Modular Jacks **MS-FAC2612-1 and MS-FAC2612-2:** Input/Output: Pluggable Screw Terminal Blocks FC Bus, SA Bus and Supply Power: 3-wire and 4-wire Pluggable Screw Terminal Blocks FC Bus and SA Bus Port: RJ-12 6-pin Modular Jacks **MS-FAC4911-0:** Input/Output: Fixed Screw Terminal Blocks SA Bus and Supply Power: 3-wire and 4-wire Pluggable Screw Terminal Blocks SA Bus Port: RJ-12 6-pin Modular Jacks
Mounting	Horizontal on single 35 mm DIN rain mount (preferred), or screw mount on flat surface with three integral mounting clips on controller
Housing	Enclosure material: ABS and polycarbonate UL94 5VB, self-extinguishing; Plenum-rated Protection Class: IP20 (IEC529) (except the FAC2612 controller)
Dimensions (Height x Width x Depth)	**MS-FAC2513-0**[1]**:** 150 x 164 x 48 mm (5-7/8 x 6-7/16 x 1-7/8 in.) including terminals and mounting clips **MS-FAC2611-0:** 150 x 190 x 53 mm (5-7/8 x 7-1/2 x 2-1/8 in.) including terminals and mounting clips **MS-FAC2612-x:** 150 x 164 x 53 mm (5-7/8 x 6-7/16 x 2-1/8 in.) including terminals and mounting clips **MS-FAC3611-0, MS-FAC3613-0**[1]**, and MS-FAC4911-0:** 150 x 220 x 57.5 mm (5-7/8 x 8-3/4 x 2-3/8 in.) including terminals and mounting clips **Note:** Mounting space for FAC models requires an additional 50 mm (2 in.) space on top, bottom, and front face of controller for easy cover removal, ventilation, and wire terminations.
Weight	0.5 kg (1.1 lb)

Table 5: FAC Series

Compliance CE	**United States:** UL Listed, File E107041, CCN PAZX, UL 916, Energy Management Equipment; FCC Compliant to CFR47, Part 15, Subpart B, Class A UL Listed, File S4977, UL 864 UUKL/UUKLC 10th Edition Listed, Smoke Control Units and Accessories for Fire Alarm Systems Equipment (models with **U** product code suffix only)
	Canada: UL Listed, File E107041, CCN PAZX7, CAN/CSA C22.2 No. 205, Signal Equipment; Industry Canada Compliant, ICES-003 UL Listed, File S4977, UL 864 UUKL/ORD-C100-13 10th Edition Listed, Smoke Control Units and Accessories for Fire Alarm Systems (models with **U** product code suffix only)
	Europe: CE Mark – Johnson Controls declares that this product is in compliance with the essential requirements and other relevant provisions of the EMC Directive. Johnson Controls, declares that the FAC2612-2 models are also in compliance with the essential requirements and other relevant provisions of the Low Voltage Directive. Declared as Independently Mounted, Intended for Panel Mounting, Operating Control Type 1.B, 4kV rated impulse voltage, 100°C ball pressure test.
	Australia and New Zealand: RCM Mark, Australia/NZ Emissions Compliant
	BACnet International: **MS-FAC261x-x:** BACnet® Testing Laboratories (BTL) Protocol Revision 7 Listed BACnet Advanced Application Controller (B-AAC) **MS-FAC3611-0:** BACnet® Testing Laboratories (BTL) Protocol Revision 9 Listed BACnet Advanced Application Controller (B-AAC) **MS-FAC2513-0**[1]**, MS-FAC3613-0**[1]**, and MS-FAC4911-0:** BACnet® Testing Laboratories (BTL) Protocol Revision 12 Listed BACnet Advanced Application Controller (B-AAC)

1 This model is currently only available in Asia. Contact your local Johnson Controls representative for more information.
2 FAC4911 supports R9.0 or later versions of these engines.

The performance specifications are nominal and conform to acceptable industry standards. For application at conditions beyond these specifications, consult the local Johnson Controls office. Johnson Controls shall not be liable for damages resulting from misapplication or misuse of its products.

Building Technologies & Solutions
507 E. Michigan Street, Milwaukee, WI 53202

Metasys® and Johnson Controls® are registered trademarks of Johnson Controls.
All other marks herein are the marks of their respective owners.© 2018 Johnson Controls

Published in U.S.A.
www.johnsoncontrols.com

REVIEWED BY CONTRACTOR

Kudlik Construction Ltd.

NAME: Sandra Rousseau P.Eng

DATE: Aoû 31, 2018

Mécanique Nordique
Plumbing
Heating
Ventillation
mecanique.nordique@hotmail.com

1255 Rue J.A.Bombardier
Lévis, Québec
G7A 2P4
Téléphone: 418-496-1109
Télécopieur: 418-496-3803

IQALUIT WWTP UPGRADE

DRAWING FOR APPROVAL

Ingineer : NUNAMI STANTEC

DRAWING #: AD-037

Section		23 41 00
Article		2.3
Plans		M-402
Application	:	HRV-1
Brand	:	TRI DIM
Model	:	TRI-PLEAT ULTRA
Revised #	:	
Supplyer	:	TRI DIM

STANTEC PROJECT #: 110126045

SUBMITTAL # AD-037

This review by Stantec is for general conformance with the design concept of Stantec's design of the:

☐ Architectural ☐ Electrical
☐ Structural ☐ Other
☑ Mechanical

component(s) only and does not mean that Stantec has verified or approves the shop drawing(s). The Contractor remains solely responsible for the shop drawing(s) and this review by Stantec does not relieve the Contractor of the Contractor's responsibility for errors or omissions in the shop drawing(s) or for meeting all requirements of the contract documents. This review does not mean that Stantec approves the detailed design inherent in the shop drawing, responsibility for which shall remain with the Contractor submitting same, nor does this review mean that Stantec accepts any deviation of the shop drawing(s) from the contract documents. The Contractor is responsible for confirming all dimensions and correlating them at the job site, for all construction means, methods and techniques, and for coordination of construction work of all trades, including coordination of all shop drawings.

Stantec

☑ REVIEWED
☐ REVIEWED, AS NOTED
☐ REVISE AND RESUBMIT
☐ NOT REVIEWED

DATE 2018-08-31

BY Brendan Zrum, P.Eng

Pages incl.		5
Date	:	**2018-08-31**
By	:	**Mécanique Nordique Inc.**

TRI-PLEAT ULTRA

TRI DIM
FILTER CORPORATION

REACHING NEW HEIGHTS

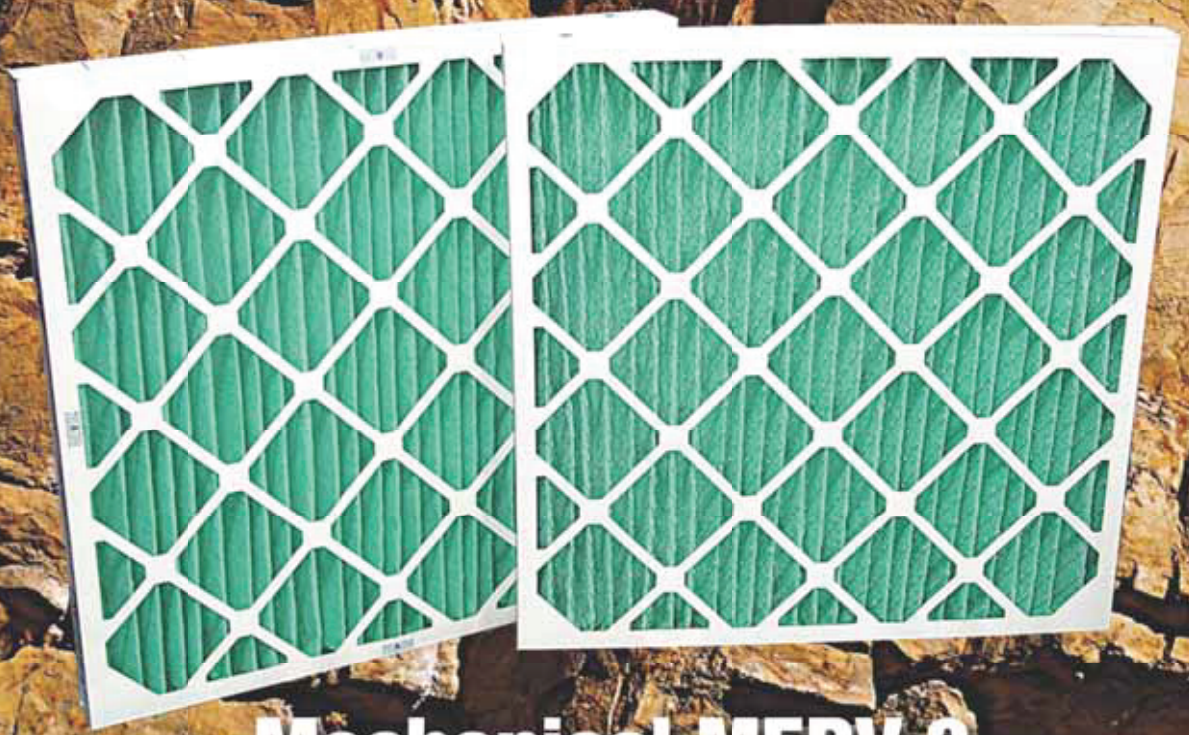

- Mechanical MERV 8
- Low Pressure Drop

LOW RESISTANCE



TRI-PLEAT ultra

Mechanical MERV 8
Low Pressure Drop

TRI-PLEAT ULTRA OFFERS A NEW LEVEL OF PERFORMANCE

... a new benchmark for pleated air filters - featuring mechanical MERV 8 performance at a very low, energy saving pressure drop - setting the standard for performance.

MECHANICAL MEDIA

- most synthetic medias rely on an electrostatic enhancement to achieve their rated efficiency levels - this enhancement only provides high efficiency for a short period of time before it dissipates. So the performance that you paid for was not delivered.

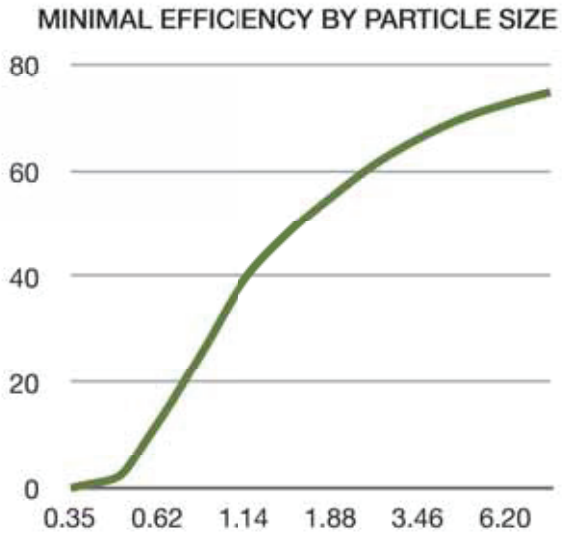

In order to ensure the promised performance is delivered the TRI-PLEAT ULTRA was tested via ASHRAE 52.2 Appendix J. The graph (upper right) shows the results of an ASHRAE 52.2 Appendix J test that dissipates the electrostatic charge - results document a MERV 8 after the electrostatic charge is dissipated.

Why is important to you? Because you deserve the efficiency that you are paying from day 1 till the filter is changed out.

MECHANICAL

LOW PRESSURE DROP - TRI-PLEAT ULTRA offers ultra low resistance 0.21"WG at 2000 CFM (for a 24x24x2) - this is up to 50% lower than comparable products (see chart below). This equals a significant reduction in operating resistance which equals energy savings.

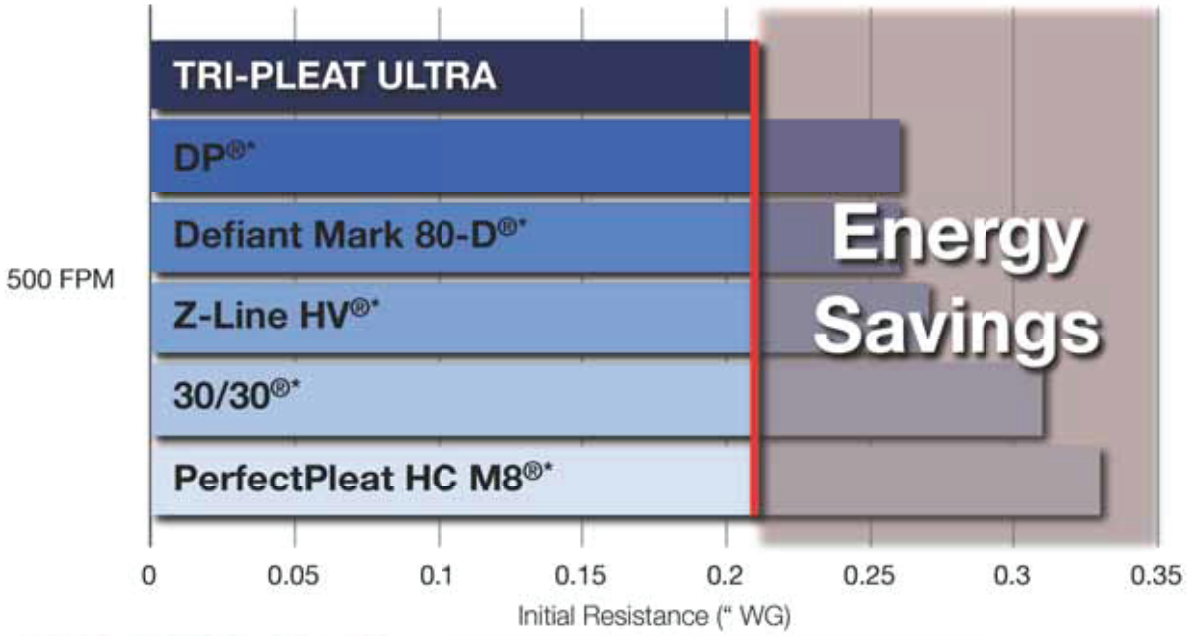

CONSTRUCTION - TRI-PLEAT ULTRA utilizes a moisture resistance 28-point die-cut frame with diagonal supports bonded to the media pack for extra strength and to maintain proper pleat spacing. The pleat pack is bonded to a two piece frame. The media is also bonded to a metal grid that maintains pleat shape and adds stability to the media through changes in airflow.



In addition the four-inch deep filters also use additional cardboard 'fingers' for additional strength and stability. All Tri-Pleat die cut frames are treated with an Aqua Coat treatment for added moisture resistance.

CAPACITY LEVELS - The TRI-PLEAT ULTRA is offered in two different capacities, the ULTRA ME filters are the High Capacity series manufactured with the maximum amount of media, 15 pleats per foot. The high capacity series offers the lowest resistance, highest dust holding capacity and the longest service life. The ULTRA LE filters are the Standard Capacity series and offer 11 pleats per foot. The standard capacity series offers extended surface area, long service life and high dust holding capacity.

* These competitive products and registered trademarks are used for identification purposes only. Resistance data taken from competitive websites during February 2011.

Specifications

PERFORMANCE

MEDIA Synthetic, Mechanical

FRAME Moisture Resistant Die-Cut

FINAL RESISTANCE 1.0" WG *(249 PA)*

RESISTANCE

1" Deep ULTRA LE Series = 0.49"WG *(122 PA)*
2" Deep ULTRA LE Series = 0.24"WG *(60 PA)*
4" Deep ULTRA LE Series = 0.22"WG *(55 PA)*

1" Deep ULTRA ME Series = 0.43"WG *(107 PA)*
2" Deep ULTRA ME Series = 0.21"WG *(52 PA)*
4" Deep ULTRA ME Series = 0.20"WG *(50 PA)*

APPROX. SQ. FT. OF MEDIA *(per 1.0 Sq. Ft. of Filter Face Area)*

1" Deep ES40LE Series Pleat = 1.6 Sq. Ft.
2" Deep ES40LE Series Pleat = 3.2 Sq. Ft.
4" Deep ES40LE Series Pleat = 5.9 Sq. Ft.

1" Deep ES40ME Series Pleat = 2.3 Sq. Ft.
2" Deep ES40ME Series Pleat = 4.8 Sq. Ft.
4" Deep ES40ME Series Pleat = 7.2 Sq. Ft.

EFFICIENCY

MERV 8 per ASHRAE 52.2 Appendix J

MEETS ANSI/UL-900 REQUIREMENTS

Tri-Dim Filter Corporation is committed to continual product development – all descriptions, specifications and performance data are subject to change without notice.
Tri-Dim products are manufactured to exacting criteria - there can be a ±5% variance in filter performance.
Tri-Dim® and Tri-Dek® are Registered Trademarks of Tri-Dim Filter Corporation.

TRI DIM FILTER CORPORATION
TRI-DIM FILTER CORPORATION
P.O. BOX 466 • 93 INDUSTRIAL DRIVE
LOUISA, VA 23093
(540) 967-2600 • FAX: (540) 967-2835
EMAIL: info@tridim.com • Website: www.tridim.com
TOLL FREE 1-800-458-9835

Since 1965 40 years VALUE INNOVATION SERVICE

AMERICAN OWNED AND OPERATED

Local Representation:

Brochure # 900-2
Revision: 02/2011

PLEASE RECYCLE - This paper may not be recyclable in your area if facilities do not exist. This brochure is printed on paper that is certified by the Sustainable Forestry Initiative (SFI) - for more information go to www.sfiprogram.org

Member of NAFA National Air Filtration Association

REVIEWED BY CONTRACTOR

Kudlik Construction Ltd.

NAME: Sandra Rousseau P.Eng

DATE: Fév 28, 2019

Mécanique Nordique
Plumbing
Heating
Ventillation
mecanique.nordique@hotmail.com

1255 Rue J.A.Bombardier
Lévis, Québec
G7A 2P4
Téléphone: 418-496-1109
Télécopieur: 418-496-3803

IQALUIT WWTP UPGRADE

DRAWING FOR APPROVAL

Ingineer : NUNAMI STANTEC

DRAWING #: AD-038

Section		CCN-001
Article		
Plans		
Application	:	Unit Heater
Brand	:	Engineered Air
Model	:	H-7
Revised #	:	
Supplyer	:	Engineered Air

STANTEC PROJECT #: 110126045

SUBMITTAL # AD-038 (CCN-M01 UH-2.8)

This review by Stantec is for general conformance with the design concept of Stantec's design of the:

- ☐ Architectural
- ☐ Structural
- ☑ Mechanical
- ☐ Electrical
- ☐ Other

component(s) only and does not mean that Stantec has verified or approves the shop drawing(s). The Contractor remains solely responsible for the shop drawing(s) and this review by Stantec does not relieve the Contractor of the Contractor's responsibility for errors or omissions in the shop drawing(s) or for meeting all requirements of the contract documents. This review does not mean that Stantec approves the detailed design inherent in the shop drawing, responsibility for which shall remain with the Contractor submitting same, nor does this review mean that Stantec accepts any deviation of the shop drawing(s) from the contract documents. The Contractor is responsible for confirming all dimensions and correlating them at the job site, for all construction means, methods and techniques, and for coordination of construction work of all trades, including coordination of all shop drawings.

Stantec

- ☑ REVIEWED
- ☐ REVIEWED, AS NOTED
- ☐ REVISE AND RESUBMIT
- ☐ NOT REVIEWED

DATE 2019-03-07

BY Brendan Zrum, P.Eng

Pages incl.		4
Date	:	**2019-02-28**
By	:	**Mécanique Nordique Inc.**

DRAWING TRANSMITTAL SHEET

EngA® ENGINEERED AIR®

JOB NO. **J210**

DATE **February 26, 2019**

☑ MONTREAL SALES OFFICE
1450 CUNARD STREET
LAVAL QC
H7S 2B7
(450) 662-1210

CANADIAN HEAD OFFICE
CALGARY AB

CANADIAN FACTORY
CALGARY AB
EDMONTON AB
NEWMARKET ON

OTHER CANADIAN SALES OFFICES
VANCOUVER, EDMONTON, CALGARY, SASKATOON, REGINA, WINNIPEG, LONDON, SUDBURY, TORONTO, HAMILTON, OTTAWA, HALIFAX, MONCTON

CONTRACTOR MECANIQUE NORDIQUE INC

ADDRESS 1255 RUE J.A. BOMBARDIER

LEVIS QC

G7A 2P4

ENGINEER STANTEC CONSULTING LTD WHITEHORSE

JOB NAME IQUALUIT WWTP EXTRA

☑ THIS ORDER IS SUBJECT TO APPROVAL. MANUFACTURING IS HELD PENDING RETURN OF ONE APPROVED COPY OF THESE FORMS TO THE INDICATED OFFICE.

☐ THIS ORDER IS NOT SUBJECT TO APPROVAL AND IS BEING MANUFACTURED ACCORDING TO THE ATTACHED FORMS.

COPIES ENCLOSED	DESCRIPTION
1	EngA Mechanical Drawing
1	Installation Operation and Maintenance Manual

PER MATHIEU HAMEL / AJW

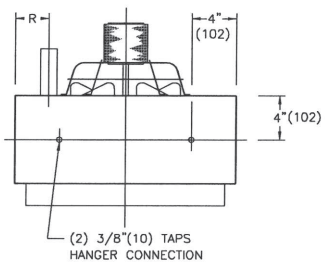

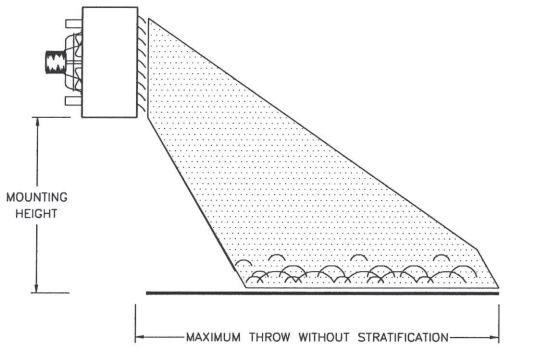

NOTE: THE FIGURES GIVEN FOR HORIZONTAL THROW IN THE TABLE BELOW INDICATE THE NECESSITY TO DIRECT AIR FLOW DOWNWARDS WITH THE HORIZONTAL LOUVRES WITH HIGH DISCHARGE AIR TEMPERATURES, WHILE COOLER DISCHARGE TEMPERATURES ALLOW A FLATTER, LONGER THROW WITHOUT STRATIFICATION.

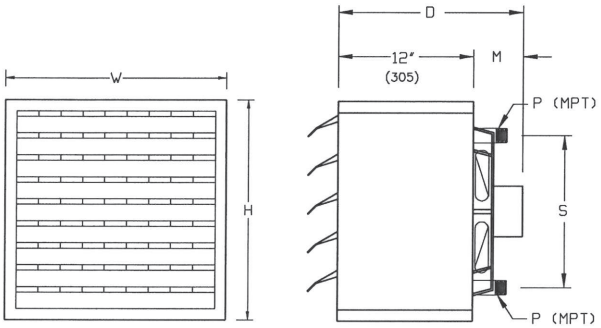

SHOWN WITH THE STANDARD 4 WAY ADJUSTABLE DIFFUSERS AND FAN GUARD

ROUGHING IN DIMENSIONS

IMPERIAL

MODEL	H (in)	W (in)	D (in)	M (in)	R (in)	S (in)	P (in)	NOISE LEVEL	WEIGHT (LBS)	MAX.MTG HEIGHT (FT)	HORIZONTAL THROW (FEET) LEAVING AIR TEMPERATURE			
											75°F	100°F	125°F	150°F
H7	32	34	21 5/8	9 5/8	2 3/4	26 3/8	1 1/2	MED	180	11	49	43	39	30

METRIC

MODEL	H (mm)	W (mm)	D (mm)	M (mm)	R (mm)	S (mm)	P (mm)	NOISE LEVEL	WEIGHT (KG.)	MAX.MTG HEIGHT (M)	HORIZONTAL THROW(METERS) LEAVING AIR TEMPERATURE			
											24°C	38°C	52°C	66°C
H7	813	864	549	244	70	670	38	MED	82	3.4	14.9	13.1	11.9	9.1

PERFORMANCE DATA
ALL DATA FOR 75 °F/ 24° C EAT

IMPERIAL

MODEL NO. AIR FLOW RATE	MOTOR HP (AMPS)	MOTOR RPM	WATER T.D. °F	180°F EWT 50% Prop-Glycol CAP. (MBH)	FLOW (GPM)	P.D. (FT.)
H7 1760 CFM	1/6 (4.1)	1075	26.2	68.28	5.8	1.9

METRIC

MODEL NO. AIR FLOW RATE	MOTOR WATTS (AMPS)	MOTOR RPM	WATER T.D. °C	82°C EWT 50% Prop-Glycol CAP. (kW)	FLOW (L/s)	P.D. (kPa)
H7 831 L/s	124 (4.1)	1075	14.5	20.01	0.366	5.6

MOTOR VOLTAGE : 115/1/60

TAG : UH-2.8

NOTE : DIMENSIONS ARE GIVEN IN INCHES AND MILLIMETERS

HORIZONTAL UNIT HEATER

EngA® ENGINEERED AIR®

REVISIONS:			
DATE:	DRN.BY:	CHKD.BY:	DRWG.NO.:
FEBRUARY 20, 2019	AJW	LS	J210M-1

EngA ENGINEERED AIR

INSTALLATION AND MAINTENANCE INSTRUCTIONS

FOR

ENGINEERED AIR HYDRONIC HEATING AND COOLING EQUIPMENT

FINNED TUBE RADIATION (All Styles)

No maintenance is required other than to vacuum out dust from the heating element annually.

Note: Care must be taken not to deform the fins during cleaning.

CABINET UNIT HEATERS (All Models)

Mount cabinet unit heaters securely in the required orientation. Pipe the supply and return and/or steam and condensate connections using good piping practice. Isolation valves and unions can facilitate maintenance and replacement. Provide for expansion and contraction of piping. Refer to project installation details and requirements if any. Connect power wire to motor using factory mounted junction box. All power supply and control wiring to this unit must be installed in accordance with the latest edition of the Canadian Electrical Code, Part 1 – C.S.A. Standard C22.1, Provincial and Local Codes and in accordance with the local authorities having jurisdiction or the National Electrical Code (ANSI/NFPA 70), state and local codes and in accordance with the local authorities having jurisdiction. Consult project requirements for controls.

No maintenance is required other than to clean the coil fins annually and occasional motor lubrication. Motors are permanently lubricated and should require not maintenance for 5,000 hours. Should a motor require lubrication, only S.A.E. 20 oil should be used. Filters will be supplied with these units. If so, these should be cleaned or replace each heating season.

Note: During any work on these units, care should be taken not to damage the aluminum fins.

UNIT HEATERS
(Vertical and Horizontal Models)

Suspend unit heaters securely with allowance for maintenance and removal. Pipe the supply and return or steam and condensate connections using good piping practice. Isolation valves and unions can facilitate maintenance and replacement. Provide for expansion and contraction of piping. Refer to project installation details and requirements if any. Connect power wire to motor using factory mounted junction box. All power supply and control wiring to this unit must be installed in accordance with the latest edition of the Canadian Electrical Code, Part 1 – C.S.A. Standard C22.1, Provincial and Local Codes and in accordance with the local authorities having jurisdiction or the National Electrical Code (ANSI/NFPA 70), state and local codes and in accordance with the local authorities having jurisdiction. Consult project requirements for controls.

No maintenance is required other than to clean the coil fins annually and occasional motor lubrication. Motors are permanently lubricated and should require no maintenance for 5,000 hours. Should a motor require lubrication, only S.A.E. 20 oil should be used. In dirty areas, such as welding shops, periodic inspections and cleaning of heating coils and fan blades should be made.

Note: During any work on these units, care must be taken not to damage the aluminum fins.

ALWAYS DISCONNECT ELECTRICAL SERVICES WHEN WORKING ON ANY EQUIPMENT.

REVIEWED BY CONTRACTOR

Kudlik Construction Ltd.

NAME: Sandra Rousseau P.Eng

DATE: Mar 12, 2019

Mécanique Nordique
Plumbing
Heating
Ventillation
mecanique.nordique@hotmail.com

1255 Rue J.A.Bombardier
Lévis, Québec
G7A 2P4
Téléphone: 418-496-1109
Télécopieur: 418-496-3803

IQALUIT WWTP UPGRADE

DRAWING FOR APPROVAL

Ingineer : NUNAMI STANTEC

DRAWING #: AD-039

Section 23 11 13
Article 2.2.3
Plans
Application : PAINT OIL PIPING
Brand : CARBOLINE
Model : 133HB 690 PDS
Revised # :
Supplyer : CARBOLINE

Pages incl. 9
Date : **2019-03-12**
By : **Mécanique Nordique Inc.**

STANTEC PROJECT #: 110126045

SUBMITTAL # AD-039 - FO pipe paint

This review by Stantec is for general conformance with the design concept of Stantec's design of the:

- ☐ Architectural
- ☐ Structural
- ☑ Mechanical
- ☐ Electrical
- ☐ Other

Stantec

component(s) only and does not mean that Stantec has verified or approves the shop drawing(s). The Contractor remains solely responsible for the shop drawing(s) and this review by Stantec does not relieve the Contractor of the Contractor's responsibility for errors or omissions in the shop drawing(s) or for meeting all requirements of the contract documents. This review does not mean that Stantec approves the detailed design inherent in the shop drawing, responsibility for which shall remain with the Contractor submitting same, nor does this review mean that Stantec accepts any deviation of the shop drawing(s) from the contract documents. The Contractor is responsible for confirming all dimensions and correlating them at the job site, for all construction means, methods and techniques, and for coordination of construction work of all trades, including coordination of all shop drawings.

- ☑ REVIEWED
- ☐ REVIEWED, AS NOTED
- ☐ REVISE AND RESUBMIT
- ☐ NOT REVIEWED

DATE 2019-03-26

BY Brendan Zrum, P.Eng

Carbothane® 133 HB

PRODUCT DATA SHEET

SELECTION & SPECIFICATION DATA

Generic Type	Aliphatic Acrylic-Polyester Polyurethane
Description	High build, low sheen finish that has excellent resistance to corrosion, chemicals and abrasion. Suitable for application over a number of Carboline primers and intermediates, this material provides very good weathering performance in a broad range of colors.
Features	• Outstanding performance properties in both mild and aggressive environments • High build; suitable for many two-coat systems • Suitable for application direct to inorganic zincs • Application by spray, brush or roller • Indefinite recoatability • VOC compliant to current AIM regulations
Color	Refer to Carboline Color Guide. Certain colors may require multiple coats to hide.
Finish	Satin
Primer	Refer to Substrates & Surface Preparation. Topcoat with Carbothane® Clear Coat when required.
Dry Film Thickness	3 - 5 mils (76 - 127 microns) per coat Dry film thickness in excess of 7 mils (175 microns) per coat is not recommended.
Solids Content	By Volume 57% +/- 2%
Theoretical Coverage Rate	914 ft²/gal at 1.0 mils (22.4 m²/l at 25 microns) 305 ft²/gal at 3.0 mils (7.5 m²/l at 75 microns) 183 ft²/gal at 5.0 mils (4.5 m²/l at 125 microns) Allow for loss in mixing and application.
VOC Values	**As Supplied** : 3.2 lbs./gal (383 g/l) Thinner 214 : 3.3 lbs/gal (403 g/l) Thinner 241 : 3.5 lbs/gal (423 g/l) Thinner 25 : 11 oz/gal: 3.5 lbs./gal (420 g/l) Thinner 25 : 18 oz/gal: 3.7 lbs./gal (449 g/l) 1.5 oz/gal of Additive 101 adds 0.08 lbs/gal (10 g/l). These are nominal values and may vary slightly with color.
Dry Temp. Resistance	Continuous: 200°F (93°C) Non-Continuous: 250°F (121°C) Discoloration and loss of gloss is observed above 200°F (93°C)
Limitations	*The alignment of aluminum flakes in aluminum-filled finishes is very dependent on application conditions and techniques. Care must be taken to keep conditions as constant as possible to reduce variations in final appearance. It is also advisable to work from a single batch of material since variations can occur from batch to batch.

SUBSTRATES & SURFACE PREPARATION

General	Surfaces must be clean and dry. Employ adequate methods to remove dirt, dust, oil and all other contaminants that could interfere with adhesion of the coating. Refer to the specific primer's Product Data Sheet for detailed requirements of the specified primer.
Steel	SSPC-SP6 with a 1.5-2.5 mil (37.5-62.5 micron) surface profile for maximum protection. SSPCSP2 or SP3 as minimum requirement. Prime with specific Carboline primers as recommended by your Carboline sales representative.
Galvanized Steel	Prime with specific Carboline primers as recommended by your Carboline Sales Representative. Refer to the specific primer's Product Data Sheet for substrate preparation requirements.
Aluminum	SSPC-SP1 and prime with appropriate Carboline primer as recommended by your Carboline sales representative.
Previously Painted Surfaces	Lightly sand or abrade to roughen and degloss the surface. Existing paint must attain a minimum 3A rating in accordance with ASTM D3359 "XScribe" adhesion test. Prime with specific Carboline primers as recommended by your Carboline sales representative.

PERFORMANCE DATA

Test Method	System	Results
ASTM B117 Salt Fog	Blasted Steel 1 ct. IOZ 1 ct. 133 HB	No rusting, or blistering on plane or scribe 2,000 hours
ASTM B117 Salt Fog	Blasted Steel 1 ct. OZ 1 ct. 133 HB	No rusting, or blistering on plane or scribe 4,000 hours
ASTM D1735 Water Fog	Blasted Steel 1 ct. Epoxy 1 ct. 133 HB	No rusting or blistering after 8600 hours.
ASTM D4213 Scrub Resistance	1 ct. 133 HB	.0027 microliters erosion rate after 100 cycles with abrasive scrub medium.
ASTM D4585 Humidity	Blasted Steel 1 ct. IOZ 1 ct. 133 HB	No rusting or blistering after 3000 hours.
ASTM D5894 QUV A Prohesion	1 ct. 133 HB	No effect on plane area and 78% gloss retention after 1008 hours of wet/dry salt fog cycle
ASTM G26 Weatherometer	Blasted Steel 1 ct IOZ 1 ct. 133 HB	No blistering, rusting or cracking after 3500 hours
ASTM G53 QUV (2500 hours w/ UVA 340 bulb)	Blasted Steel 1 ct. Epoxy 1 ct. 133 HB	Color change less than 2 McAdam units; no blistering, rusting, cracking or chalking.
Graffiti Resistance	Blasted Steel 1 ct. Epoxy 1 ct. 133 HB	All markings and stains removed by solvent after exposure to: shoe polish,Sharpie marker, crayon, l

Test reports and additional data available upon request.

MIXING & THINNING

Mixing	Power mix Part A separately, then combine with Part B and power mix. DO NOT MIX PARTIAL KITS.
Thinning	Spray: Up to 11 oz/gal (9%) w/ Thinner 25. Roller: Up to 18 oz/gal (14%) w/ Thinner 25. Use of thinners other than those supplied or recommended by Carboline may adversely affect product performance and void product warranty, whether expressed or implied. Thinner 214 may also be used, up to 6 oz/gal, for either spray or brush/roller application. Carboline Thinner 236E may also be used to minimize HAP and VOC emissions.

MIXING & THINNING

Ratio	6:1 Ratio (A to B) **.88 Gal. Kit** Part A: 1 gal. can (partial filled) UC 133: 1 pint **5.0 Gal. Kit** Part A: 5 gal. can (partial filled) UC 133: 1 gallon can (partial filled)
Pot Life	4 Hours at 75°F (24°C) and less at higher temperatures. Pot life ends when coating becomes too viscous to use. MOISTURE CONTAMINATION WILL SHORTEN POT LIFE AND CAUSE GELLATION.

APPLICATION EQUIPMENT GUIDELINES

Listed below are general equipment guidelines for the application of this product. Job site conditions may require modifications to these guidelines to achieve the desired results.

Spray Application (General)	This is a high solids coating and may require adjustments in spray techniques. Wet film thickness is easily and quickly achieved. The following spray equipment has been found suitable and is available from manufacturers such as Binks, DeVilbiss and Graco.
Conventional Spray	Pressure pot equipped with dual regulators 3/8" I.D. minimum material hose .070" I.D. fluid tip and appropriate air cap
Airless Spray	Pump Ratio: 30:1 (min.)* GPM Output: 3.0 (min.) Material Hose: 3/8" I.D. (min.) Tip Size: .013-.015" Output PSI: 2100-2300 Filter Size: 60 mesh *Teflon packings are recommended and available from the pump manufacturer.
Brush & Roller (General)	Multiple coats may be required to obtain desired appearance, recommended dry film thickness and adequate hiding. Avoid excessive re-brushing or rerolling. For best results, tie-in within 10 minutes at 75°F (24°C).
Brush	Recommended for touch-up only. Use a medium, natural bristle brush.
Roller	Use a medium-nap synthetic roller cover with phenolic core.

APPLICATION CONDITIONS

Condition	Material	Surface	Ambient	Humidity
Minimum	40°F (4°C)	40°F (4°C)	40°F (4°C)	0%
Maximum	100°F (38°C)	110°F (43°C)	110°F (43°C)	90%

Industry standards are for substrate temperatures to be 5°F (3°C) above the dew point. This product simply requires the substrate temperature to be above the dew point.
Caution: This Product is moisture sensitive in the liquid stage and until cured. Protect from high humidity, dew and direct moisture contact until cured. Application and/or curing in humidities above maximum, or exposure to moisture from rain or dew may result in a loss of gloss and/or microbubbling of the product.

CURING SCHEDULE

Surface Temp.	Dry to Handle	Dry to Recoat	Final Cure General
40°F (4°C)	20 Hours	20 Hours	28 Days
50°F (10°C)	12 Hours	12 Hours	14 Days
75°F (24°C)	5 Hours	5 Hours	7 Days
90°F (32°C)	1 Hour	1 Hour	4 Days

These times are based on a 3.0-5.0 mil (75-125 micron) dry film thickness. Higher film thickness, insufficient ventilation or cooler temperatures will require longer cure times and could result in solvent entrapment and premature failure.
***Maximum recoat times are indefinite.** Surface must be clean and dry. As part of good painting practice it is recommended to test for adhesion by wiping the surface with Thinner 25. If the film shows a slight "tack" the surface is suitable for recoating without extensive surface preparation such as abrading.
Carboline Additive 101 can be used to accelerate the film forming process in this product for conditions outside of the parameters of this data sheet. Carboline Additive 101 is added at a rate of 1.0-2.0 oz per mixed gallon or a maximum of 6 oz per mixed five gallons. At this addition rate, Additive 101 will accelerate the cure rate of the urethane product between 25-40% depending on the substrate temperature range and reduce the pot life of the product by approximately 40-50% of that stated on the product data sheet. With the use of Additive 101, this product will continue to cure at temperatures as low as 20°F (-7°C).

CLEANUP & SAFETY

Cleanup	Use Thinner 2 or Acetone. In case of spillage, dispose of in accordance with local applicable regulations.
Safety	Read and follow all caution statements on this product data sheet and on the SDS for this product and use personal protective equipment as directed.
Ventilation	When used in enclosed areas, thorough air circulation must be used during and after application until the coating is cured. The ventilation system should be capable of preventing the solvent vapor concentration from reaching the lower explosion limit for the solvents used. User should test and monitor exposure levels to insure all personnel are below guidelines. If not able to monitor levels, use MSHA/NIOSH approved supplied air respirator.

PACKAGING, HANDLING & STORAGE

Shelf Life	Part A: Min. 36 months at 75°F (24°C) Part B: Min. 24 months at 75°F (24°C) *Shelf Life: when kept at recommended storage conditions and in original unopened containers.
Storage Temperature & Humidity	40° -110°F (4°-43°C) 0-90% Relative Humidity
Storage	Store Indoors. This product is solvent based and not affected by excursions below these published storage temperatures, down to 10°F, for a duration of no more than 14 days. Always inspect the product prior to use to make sure it is smooth and homogeneous when properly mixed.
Shipping Weight (Approximate)	.875 Gallon Kit - 11 lbs. (5 kg) 5 Gallon Kit - 64 lbs. (29 kg)
Flash Point (Setaflash)	Part A: 95°F (35°C) Part B: 91°F (33°C)

WARRANTY

To the best of our knowledge the technical data contained herein is true and accurate on the date of publication and is subject to change without prior notice. User must contact Carboline Company to verify correctness before specifying or ordering. No guarantee of accuracy is given or implied. We guarantee our products to conform to Carboline quality control. We assume no responsibility for coverage, performance, injuries or damages resulting from use. Carbolines sole obligation, if any, is to replace or refund the purchase price of the Carboline product(s) proven to be defective, at Carbolines option. Carboline shall not be liable for any loss or damage. NO OTHER WARRANTY OR GUARANTEE OF ANY KIND IS MADE BY CARBOLINE, EXPRESS OR IMPLIED, STATUTORY, BY OPERATION OF LAW, OR OTHERWISE, INCLUDING MERCHANTABILITY AND FITNESS FOR A PARTICULAR PURPOSE. All of the trademarks referenced above are the property of Carboline International Corporation unless otherwise indicated.

product data carboline®

Carboguard® 690

Selection & Specification Data

Generic Type	Phenalkamine epoxy
Description	High performance, surface tolerant epoxy that has excellent resistance to water and wastewater exposures. This coating exhibits outstanding moisture tolerance during application, low temperature cure capability, and very fast cure response for quick return to service. Can be used on structural steel, piping, tankage, and equipment exposed to industrial or marine environments. It can also be used in immersion service for salt water, process water (non-potable) and waste water treatment projects; and is ideal for coatings under insulation on pipes up to 300°F(150°C).
Features	• High solids, low VOC • High build (16 mils) • Low temperature cure (20°F) • Excellent moisture tolerance during application • Fast cure response
Color	Refer to Carboline Color Chart
Finish	Semi-Gloss
Primers	Self-Priming, Zinc-rich, or epoxies
Topcoats	May be coated with Acrylics, Epoxies, Alkyds, or Polyurethanes depending on exposure and need.
Dry Film Thickness	5.0 - 8.0 mils (127 - 203 microns) per coat
Solids Content	By Volume 80% +/- 2%
Theoretical Coverage Rate	1283 ft^2 at 1 mil (31 m^2/l at 25 microns) 257 ft^2 at 5 mils (6 m^2/l at 125 microns) 160 ft^2 at 8 mils (4 m^2/l at 200 microns) Allow for loss in mixing and application.
Severe Exposures	Under insulation temperature resistance: Continuous: 300°F (149°C) Non-Continuous: 350°F (176°C) Discoloration occurs above 200 F (93 C) but does not affect performance. Discoloration occurs above 200°F(93°C) but does not affect performance.
VOC Values	Thinner 2 16* oz/gal 2.06 lbs/gal 248 g/l As Supplied 1.42 lbs/gal 170 g/l mixed These are nominal values and may vary with color.
Limitations	• Epoxies lose gloss, discolor and eventually chalk in sunlight exposure. Discoloration is more pronounced with this product. • For immersion projects use only factory made material in special colors. • This product has the ability to be applied over damp or even wet substrates. Remove excess water by blowing down the surface and apply in multiple coats to achieve desired film thickness. • Brush or roller, and multiple coats are preferred over wet substrates.

Selection & Specification Data

Temperature Resistance (Immersion)	Immersion temperature resistance depends upon exposure (120°F maximum). Consult Carboline Technical Service for specific information. Linings exposed to cargos warmer than the outside steel temperature are subject to a "cold-wall' effect. The smaller the temperature differential, the less negative influence on performance.

Substrates & Surface Preparation

General	Remove any oil or grease from surface to be coated with clean rags soaked in Carboline Thinner #2, or toluol.
Steel	**Immersion:** SSPC-SP10; Surface Profile: 1.5-3.0 mils (38-75 microns) (See Limitations) **Non-Immersion:** SSPC-SP6; Surface Profile: 1.5-3.0 mils (38-75 microns) In certain situations hand tool or power tool cleaning (SSPC-SP2 or 3) is acceptable for thicknesses up to 8 mils (150 microns)
Concrete or CMU	Clean and dry. Remove all loose, unsound concrete. Do not apply coating unless concrete has cured at least 28 days @ 70°F (21°C) and 50% Relative Humidity or equivalent. Consult Carboline Technical Service for more specific recommendations.

Mixing & Thinning

Mixing	Mix separately, then combine and mix in the following proportions (4:1 ratio): **1 Gal. Kit** Part A: .8 gallon Part B: .2 gallon **5 Gal. Kit** Part A: 4 gallon Part B: 1 gallon Thin up to 12.5% by volume with Carboline Thinner #2 for non-immersion applications and Thinner #10 for immersion projects.
Pot Life	1.5 hours at 75°F (24°C) and less at higher temperatures. Pot life ends when coating becomes too viscous to use.

Application Equipment Guidelines

Listed below are general equipment guidelines for the application of this product. Job site conditions may require modifications to these guidelines to achieve the desired results.

Spray Application (General)	Hold gun 12-14 inches from the surface and at a right angle to the surface
Conventional Spray	Pressure pot equipped with dual regulators, 3/8" I.D. minimum material hose, .070" I.D. fluid tip and appropriate air cap.

June 2013

1027

To the best of our knowledge the technical data contained herein is true and accurate on the date of publication and is subject to change without prior notice. User must contact Carboline Company to verify correctness before specifying or ordering. No guarantee of accuracy is given or implied. We guarantee our products to conform to Carboline quality control. We assume no responsibility for coverage, performance or injuries resulting from use. Liability, if any, is limited to replacement of products. NO OTHER WARRANTY OR GUARANTEE OF ANY KIND IS MADE BY CARBOLINE, EXPRESS OR IMPLIED, STATUTORY, BY OPERATION OF LAW, OR OTHERWISE, INCLUDING MERCHANTABILITY AND FITNESS FOR A PARTICULAR PURPOSE. Carboline® and Carboguard® are registered trademarks of Carboline Company.

Carboguard® 690

Application Equipment Guidelines

Listed below are general equipment guidelines for the application of this product. Job site conditions may require modifications to these guidelines to achieve the desired results.

Airless Spray

Pump Ratio: 45:1 (min.)
Volume Output: 11.5 l/min min. (2.5gpm min.)
Material Hose: 12.5mm min. (½" I.D. recommended)
Tip Size: 0.43-0.53mm (0.017-0.021")
Output: 140-175kg/cm²
Pressure: (2000-2500 psi)
*PTFE packings are recommended and available from pump manufacturer.

Brush & Roller (General)

Not recommended for tank lining applications except when striping welds. For non-immersion applications over damp surfaces, brush and roller is the preferred method. Multiple coats may be required to obtain desired appearance, recommended dry film thickness and adequate hiding. Avoid excessive re-brushing or re-rolling. For best results, tie-in within 10 minutes at 75°F (24°C). Thin up to 12.5% by volume per gallon with Carboline #2. Use a short-nap synthetic roller cover with phenolic core.

Application Conditions

Condition	Material	Surface	Ambient	Humidity
Minimum	45 °F (7 °C)	20 °F (-7 °C)	20 °F (-7 °C)	0%
Maximum	90 °F (32 °C)	120 °F (49 °C)	100 °F (38 °C)	85%

Industry standards are for substrate temperatures to be above the dew point. For immersion conditions it is recommended to follow this procedure. For non-immersion conditions this product can tolerate damp substrates. See Brush or Roller above. Special thinning and application techniques may be required above or below normal conditions.

Curing Schedule

Surface Temp. & 50% Relative Humidity	Dry to Touch	Maximum Recoat Time	Minimum Recoat Time	Minimum cure for immersion service
20 °F (-7 °C)	10 Hours	60 Days	72 Hours	45 Days
35 °F (2 °C)	6 Hours	45 Days	17 Hours	30 Days
60 °F (16 °C)	5 Hours	30 Days	6 Hours	14 Days
75 °F (24 °C)	4 Hours	15 Days	2 Hours	7 Days
90 °F (32 °C)	2 Hours	7 Days	2 Hours	6 Days

These times are based on a 5.0-8.0 mil (125-200 micron) dry film thickness per coat. Higher film thickness, insufficient ventilation or cooler temperatures will require longer cure times and could result in solvent entrapment and premature failure. Excessive humidity or condensation on the surface during curing can interfere with the cure, can cause discoloration and may result in a surface haze. Any haze or blush must be removed by water washing before recoating. If the maximum recoat times have been exceeded, the surface must be abraded by sweep blasting or sanding prior to the application of additional coats. For force curing, contact Carboline Technical Service for specific requirements. For application and cure conditions below 35°F, dehumidify before, during, and after application to prevent ice formation on the surface.

Surface Temp. & 50% Relative Humidity	Dry to Handle	Dry to Recoat
35 °F (2 °C)	48 Hours	2 Days
60 °F (16 °C)	24 Hours	40 Hours
75 °F (24 °C)	8 Hours	24 Hours
90 °F (32 °C)	6 Hours	24 Hours

The above times are based on 16 mils (400 microns) DFT of Carboguard 690 applied in a single coat. Honor the other precautions outlined above.

Cleanup & Safety

Cleanup

Use Thinner #2 or Acetone. In case of spillage, absorb and dispose of in accordance with local applicable regulations.

Safety

Read and follow all caution statements on this product data sheet and on the MSDS for this product. Employ normal workmanlike safety precautions. Hypersensitive persons should wear protective clothing, gloves and use protective cream on face, hands and all exposed areas.

Ventilation

When used as a tank lining or in enclosed areas, thorough air circulation must be used during and after application until the coating is cured. The ventilation system should be capable of preventing the solvent vapor concentration from reaching the lower explosion limit for the solvents used. User should test and monitor exposure levels to insure all personnel are below guidelines. If not sure or if not able to monitor levels, use MSHA/NIOSH approved supplied air respirator.

Caution

This product contains flammable solvents. Keep away from sparks and open flames. All electrical equipment and installations should be made and grounded in accordance with the National Electric Code. In areas where explosion hazards exist, workers should be required to use non-ferrous tools and wear conductive and non-sparking shoes.

Packaging, Handling & Storage

Shelf Life

Part A: 24 months at 76°F (24°C)
Part B: 12 months at 76°F (24°C)

*Shelf Life: (actual stated shelf life) when kept at recommended storage conditions and in original unopened containers.

Shipping Weight (Approximate)

1 Gal. Kit
15 lbs.
5 Gal. Kit
75 lbs.

Storage Temperature & Humidity

40 -100°F (4°C-38°C)
0-95% Relative Humidity

Flash Point (Setaflash)

Part A: 91°F (33°C)
Part B: 80 °F (27°C)
Thinner 2: 23°F (-5°C)

Storage

Store Indoors. KEEP DRY

carboline®
Coatings - Linings - Fireproofing
2150 Schuetz Rd., St. Louis, MO 63146
PH: 314-644-1000 Toll-Free: 800-848-4645
www.carboline.com

An RPM Company

June 2013
1027

To the best of our knowledge the technical data contained herein is true and accurate on the date of publication and is subject to change without prior notice. User must contact Carboline Company to verify correctness before specifying or ordering. No guarantee of accuracy is given or implied. We guarantee our products to conform to Carboline quality control. We assume no responsibility for coverage, performance or injuries resulting from use. Liability, if any, is limited to replacement of products. NO OTHER WARRANTY OR GUARANTEE OF ANY KIND IS MADE BY CARBOLINE, EXPRESS OR IMPLIED, STATUTORY, BY OPERATION OF LAW, OR OTHERWISE, INCLUDING MERCHANTABILITY AND FITNESS FOR A PARTICULAR PURPOSE. Carboline® and Carboguard® are registered trademarks of Carboline Company.

colors

ANSI

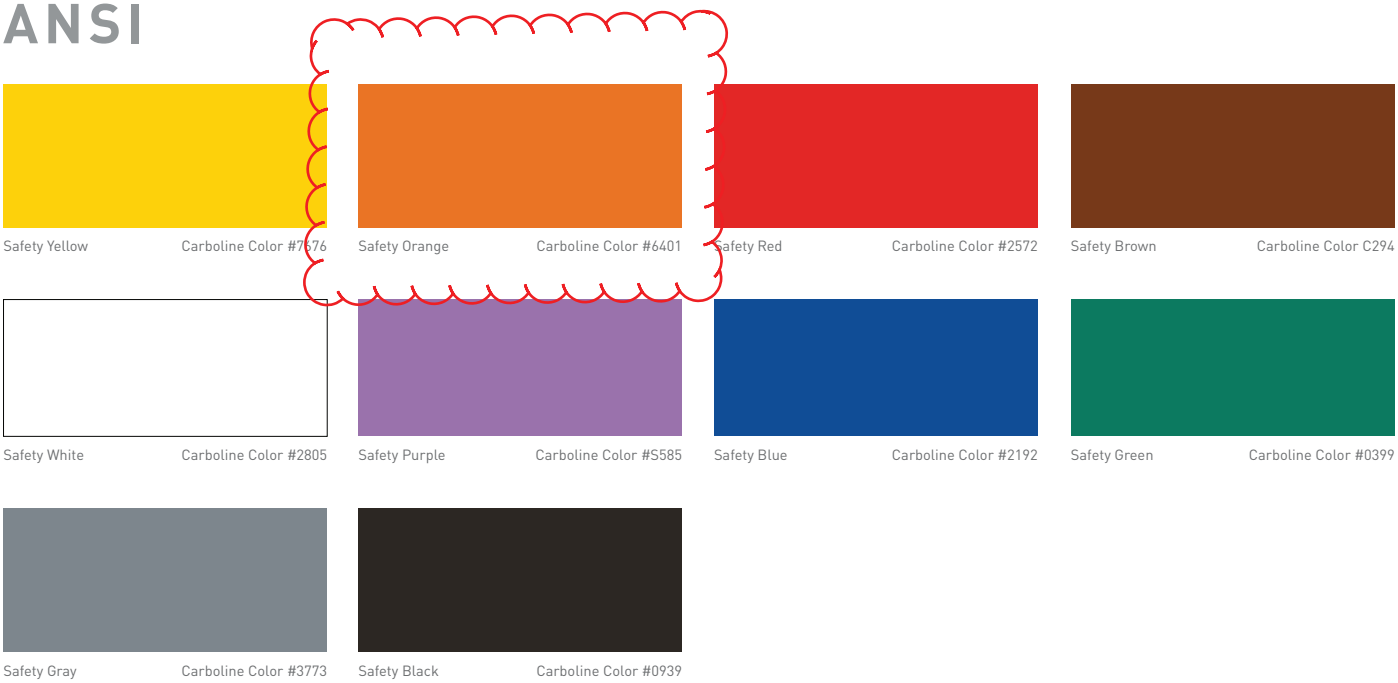

Safety Yellow	Carboline Color #7676	Safety Orange	Carboline Color #6401	Safety Red	Carboline Color #2572	Safety Brown	Carboline Color C294
Safety White	Carboline Color #2805	Safety Purple	Carboline Color #S585	Safety Blue	Carboline Color #2192	Safety Green	Carboline Color #0399
Safety Gray	Carboline Color #3773	Safety Black	Carboline Color #0939				

OSHA



Safety Blue 15092	Carboline Color #8128	Safety Blue 15102	Carboline Color #C180	Safety Green 14120	Carboline Color #6302	Safety Green 14260	Carboline Color #0381
Safety Orange 12246	Carboline Color #N402	Safety Orange 12300	Carboline Color #0432	Safety Yellow 13591	Carboline Color #0657	Safety Yellow 13655	Carboline Color #N618
Safety Red 11140	Carboline Color #6541	Safety Red 11120	Carboline Color #0557	Safety Purple 17142	Carboline Color #0530	Safety Purple 17155	Carboline Color #4501
Safety Red 11105	Carboline Color #N508						

Colors shown are ink representation of actual color standards. Actual product appearance may vary slightly due to product, gloss, surface texture or method of application. Vibrant colors may require additional coats or a primer similar in color to the finish coat for optimum color rendition.

Carboline Company
World Headquarters
2150 Schuetz Road
St. Louis, MO 63146 USA
PH: +1-314-644-1000
www.carboline.com

01-46-1016-633

REVIEWED BY CONTRACTOR

Kudlik Construction Ltd.

NAME: Sandra Rousseau P.Eng

DATE: Mar 12, 2019

Mécanique Nordique
Plumbing
Heating
Ventillation
mecanique.nordique@hotmail.com

1255 Rue J.A.Bombardier
Lévis, Québec
G7A 2P4
Téléphone: 418-496-1109
Télécopieur: 418-496-3803

IQALUIT WWTP UPGRADE

DRAWING FOR APPROVAL

Ingineer : NUNAMI STANTEC

DRAWING #: AD-040

Section	:	25 30 02
Article	:	2.13 2.14
Plans	:	All
Application	:	Controls Valves
Brand	:	Johnson Controls
Model	:	
Revised #	:	
Supplyer	:	Johnson Controls

Pages incl.		23
Date	:	**2019-03-11**
By	:	**Mécanique Nordique Inc.**

Johnson Controls Ltd.
1375 Rue Frank-Carrel
Ville de Québec, QC G1N 2E7
Tel. 418-681-7958

TRANSMITTAL LETTER

TO:	Mecanique Nordique	Date:	March 8, 2019
	9257-6131 Quebec Inc.	Project Name:	Iqualuit Waste Water Treatment Plant Upgrade
	1255 Rue J.A. Bombardier	Project #:	8N0Y-0079
	Levis, QC G7A 2P4	Customer PO#:	

We are sending you: ☒ **Enclosed/Attached** ☐ **Under Separate Cover**

☐ Shop Drawings	☒ Product Data Sheets	☐ Copy of Letter
☐ Plans	☐ Copy of Letter	☒ Submittals
☐ Specifications	☐ Samples	☐ Operations & Maint. Manuals
☐ Damper Schedules	☐ Room Schedules	☐ Device Schedules
☒ Valve Schedules	☐ Door Schedules	☐

This material/information is being sent:

☐ Per your Request.	☐ For your Record and File	☐ For Correction & Resubmittal.
☒ For your Review and Approval.	☐ Approved as Submitted.	☐ For issue to Subcontractors.
☐ For your Review and Comment.	☐ Approved as Noted.	☐ Final Distributions
☐	☐	☐

We have detailed these Submittals based on our interpretation of the contract drawings & specifications

☒ Return 1 Approved Copy
☐ Fabrication Held for Approval & Written Release
☐ Equipment is being fabricated and any changes may create a delay in shipment and a possible increase in price.

Please have your detailing department look carefully at the attached submittals. We cannot be held responsible for any cost or lead time changes incurred for modifications once the equipment has been released for fabrication.

Item	Description / Comments	Document # / Ref	Rev	# of Sets
1	Iqualuit Waste Water Treatment Plant Upgrade-HW Submittal	8N0Y-0079	01	01
2	Iqualuit Waste Water Treatment Plant Upgrade-HW ReSubmittal	8N0Y-0079	02	01
3	Valve Only	8N0Y-0079	03	01
4				
5				
6				

Message/Comments:

Delivered by: Date: 3/8/2019

Received by: Date: 3/8/2019

CC to:	# of Copies

TRANSMITTED BY:
Philippe Cernosek
Project Manager

Date: March 8, 2019

BUILDING AUTOMATION SYSTEM

SUBMITTAL

IQUALUIT WASTE WATER TREATMENT PLANT UPGRADE VALVE ONLY

Submitted To:
Mecanique Nordique
9257-6131 Quebec Inc.
1255 Rue J.A. Bombardier
Levis, QC G7A 2P4

Submitted By:
Philippe Cernosek
Project Manager

JCI Contract: 8N0Y-0079

Johnson Controls Ltd.
1375 Rue Frank-Carrel
Ville de Québec, QC G1N 2E7
Tel: 418-681-7958
Fax:

STAMPS

Project Name: Iqualuit Waste Water Treatment Plant Upgrades
Project Number: 8N0Y-0079

Valve Schedule

Tag						Valve Information															Actuator Information		
Item	System	Service	Qty.	JCI DWG	Ref. Dwg.	Code Number	Valve Family	Configuration	Fail Position	Inlet Pipe Size (in)	Valve Size (in)	Medium	Flow (gpm or lbs/hr)	Design Delta P (psi)	Valve Delta P (psi)	Design Coefficient (Cv)	Valve Coefficient (Cv)	Valve Close Off (psi)	Trim Material	Connection	Code Number	Actuator Control	Comments
1	AHU-2	PH-O	1	006.001	M202	VG1245DP+928GGA	Ball Valve	2-Way	Valve Open	2	1-1/4	Water	38.2	5.0	4.2	17.1	18.7	200.0	Stainless Steel	Threaded	VA9208-GGA-2	0-10VDC PROP	
2	AHU-2	RH-O	1	006.001	M202	VG1245CL+923GGA	Ball Valve	2-Way	Valve Open	2	1	Water	11.1	5.0	2.2	5.0	7.4	200.0	Stainless Steel	Threaded	VA9203-GGA-2Z	0-10VDC PROP	
3	AHU-3	RH-O	1	006.006	M301	VG1845EP+948GGA	Ball Valve	3-Way	Normal Position	2	1-1/2	Water	26.9	5.0	2.1	12.0	18.7	200.0	Stainless Steel	Threaded	ExMax_Explosion proof	0-10VDC PROP	Note 1
4	CF-1	HTG-O	1	007.001	M500	VG1245AD+923GGA	Ball Valve	2-Way	Valve Open	3/4	1/2	Water	1.6	3.0	1.8	0.9	1.2	200.0	Stainless Steel	Threaded	VA9203-GGA-2Z	0-10VDC PROP	
5	HRV-1	PH-O	1	009.001	M601	VG1245AD+923GGA	Ball Valve	2-Way	Valve Open	3/4	1/2	Water	0.6	3.0	0.3	0.4	1.2	200.0	Stainless Steel	Threaded	VA9203-GGA-2Z	0-10VDC PROP	
6	HRV-1	RH-O	1	009.001	M601	VG1245AD+923GGA	Ball Valve	2-Way	Valve Open	3/4	1/2	Water	0.5	3.0	0.2	0.3	1.2	200.0	Stainless Steel	Threaded	VA9203-GGA-2Z	0-10VDC PROP	
7	CUH-1.1	HTG-VLV	1	010.001	M602	VG1245BN+923BUA	Ball Valve	2-Way	Valve Open	3/4	3/4	Water	1.6	3.0	0.0	0.9	11.7	200.0	Stainless Steel	Threaded	VA9203-BUA-2	120VAC On/Off	
8	UH-2.8	PBUHCV-O	1	010.002	M402	VG1245BG+923GGA	Ball Valve	2-Way	Valve Open	1	3/4	Water	4.9	3.0	1.1	2.8	4.7	200.0	Stainless Steel	Threaded	VA9203-GGA-2Z	0-10VDC PROP	
9	RAD-1 (E-WF-1)	RAD1-VLV	1	10.004	M602	VG1245BN+923BGA	Ball Valve	2-Way	Valve Open	3/4	3/4	Water		3.0	0.0	0.0	11.7	200.0	Stainless Steel	Threaded	VA9203-BGA-2	24VAC On/Off	
10	RAD-2 (E-WF-1)	RAD2-VLV	1	10.004	M602	VG1245BN+923BGA	Ball Valve	2-Way	Valve Open	3/4	3/4	Water		3.0	0.0	0.0	11.7	200.0	Stainless Steel	Threaded	VA9203-BGA-2	24VAC On/Off	
11	RAD-3 (WF-1)	RAD3-VLV	1	10.004	M201	VG1245BN+923BGA	Ball Valve	2-Way	Valve Open	3/4	3/4	Water		3.0	0.0	0.0	11.7	200.0	Stainless Steel	Threaded	VA9203-BGA-2	24VAC On/Off	
12	HEAT VENT	HTVENT-VLV	1	10.004	M302	VG1245BN+923BGA	Ball Valve	2-Way	Valve Open	3/4	3/4	Water	0.7	3.0	0.0	0.4	11.7	200.0	Stainless Steel	Threaded	VA9203-BGA-2	24VAC On/Off	
13	HEX3.2	HX3.2V-O	1	003.001	M602	VG1245CL+943GGA	Ball Valve	2-Way	Valve Closed	1-1/2	1	Water	11.4	5.0	2.4	5.1	7.4	200.0	Stainless Steel	Threaded	VA9203-GGA-2Z	0-10VDC PROP	
14	HEX3.1	HX3.1V-O	1	004.001	M602	VG1245CL+943GGA	Ball Valve	2-Way	Valve Closed	1-1/2	1	Water	13.5	5.0	3.3	6.0	7.4	200.0	Stainless Steel	Threaded	VA9203-GGA-2Z	0-10VDC PROP	
15	~~FUEL OIL~~	~~TK4.1V-O~~	~~1~~	~~005.001~~	~~M604~~	~~73218BN69N00~~	~~Ball Valve~~	~~2-Way~~	~~Valve Closed~~	~~2~~	~~2~~	~~Oil~~					~~38.6~~		~~Stainless Steel~~	~~Threaded~~			~~120VAC On/Off~~
16	~~FUEL OIL~~	~~TK4.2V-O~~	~~1~~	~~005.001~~	~~M604~~	~~73218BN64N00~~	~~Ball Valve~~	~~2-Way~~	~~Valve Closed~~	~~1~~	~~1~~	~~Oil~~					~~13.5~~		~~Stainless Steel~~	~~Threaded~~			~~120VAC On/Off~~
17	~~FUEL OIL~~	~~TK4.3V-C~~	~~1~~	~~005.001~~	~~M604~~	~~73218BN64N00~~	~~Ball Valve~~	~~2-Way~~	~~Valve Closed~~	~~1~~	~~1~~	~~Oil~~					~~13.5~~		~~Stainless Steel~~	~~Threaded~~			~~120VAC On/Off~~
	NOTES:																						
	1. Existing: Belimo G350, CV 40																						

This review applies to hydronic valves only (items 1 through 14 inclusive). Fuel oil valves (items 15, 16, 17) reviewed separately.

STANTEC PROJECT #: 110126045

SUBMITTAL # AD-040 Control valves (Hydronic only)

This review by Stantec is for general conformance with the design concept of Stantec's design of the:

- ☐ Architectural
- ☐ Structural
- ☑ Mechanical
- ☐ Electrical
- ☐ Other

Stantec

component(s) only and does not mean that Stantec has verified or approves the shop drawing(s). The Contractor remains solely responsible for the shop drawing(s) and this review by Stantec does not relieve the Contractor of the Contractor's responsibility for errors or omissions in the shop drawing(s) or for meeting all requirements of the contract documents. This review does not mean that Stantec approves the detailed design inherent in the shop drawing, responsibility for which shall remain with the Contractor submitting same, nor does this review mean that Stantec accepts any deviation of the shop drawing(s) from the contract documents. The Contractor is responsible for confirming all dimensions and correlating them at the job site, for all construction means, methods and techniques, and for coordination of construction work of all trades, including coordination of all shop drawings.

- ☐ REVIEWED
- ☑ REVIEWED, AS NOTED
- ☐ REVISE AND RESUBMIT
- ☐ NOT REVIEWED

DATE 2019-05-13

BY Brendan Zrum, P.Eng

Code No. LIT-1900225
Issued January 6, 2015

VG1000 Series Three-Way, Stainless Steel Trim, NPT End Connections Ball Valves with Spring-Return Electric Actuators without Switches

Description

VG1000 Series Ball Valves are designed to regulate the flow of hot or chilled water and, for some models, low-pressure steam in response to the demand of a controller in HVAC systems. Available in sizes 1/2 through 2 in. (DN15 through DN50), this family of two- and three-way forged brass valves is factory or field mounted to Johnson Controls® VA9104, M9106, M9109, and M9100 Series Non-Spring-Return and VA9203 and VA9208 Series Spring Return Electric Actuators for on/off, floating, or proportional control.

Refer to the *VG1000 Series Forged Brass Ball Valves Product Bulletin (LIT-977132)* for important product application information.

Features

- Forged Brass Body — provides 580 psig static pressure rating.
- 300 Series Stainless Steel Ball and Stem Assembly — tolerates high-temperature water or 15 psi saturated steam with fluid temperatures of -22 to 284°F (-30 to 140°C) or where a higher degree of corrosion protection is desired.
- 500:1 Rangeability — provides accurate control under all load conditions.
- Maintenance-Free Design — performs without failure in excess of 200,000 full stroke cycles in iron-oxide contaminated water.

Repair Information

If the VG1000 Series Ball Valve fails to operate within its specifications, replace the valve body, actuator, or entire assembly. For replacement parts, contact the nearest Johnson Controls representative.



VG1000 Series Three-Way, Spring-Return, Stainless Steel Ball and Stem Ball Valve Assemblies without End Switches

Selection Charts

Three-Way — Spring Return without Switches (Not Rated for Steam Service) (Part 1 of 2)

Fluid Temperatures: -22 to 212°F (-30 to 100°C) Not Rated for Steam Service				AC 24 V			AC 85–264 V (VA9203) AC 120 V (VA9208)
Valve	**Size, in.**	**Cv (Port A/B)**	**Closeoff psig**	**Floating**	**0 to 10 VDC Proportional**	**On/Off**	**On/Off**
				Spring Return Port A Open — Valve Spring Return Counterclockwise			
				VA9203-AGA-2Z	**VA9203-GGA-2Z**	**VA9203-BGA-2**	**VA9203-BUA-2**
VG1845AD	1/2	1.2[1]	200	VG1845AD+923AGA	VG1845AD+923GGA	VG1845AD+923BGA	VG1845AD+923BUA
VG1845AE		1.9[1]		VG1845AE+923AGA	VG1845AE+923GGA	VG1845AE+923BGA	VG1845AE+923BUA
VG1845AF		2.9[1]		VG1845AF+923AGA	VG1845AF+923GGA	VG1845AF+923BGA	VG1845AF+923BUA
VG1845AG		4.7[1]		VG1845AG+923AGA	VG1845AG+923GGA	VG1845AG+923BGA	VG1845AG+923BUA
VG1845AL		7.4[1]		VG1845AL+923AGA	VG1845AL+923GGA	VG1845AL+923BGA	VG1845AL+923BUA
VG1845AN		11.7		VG1845AN+923AGA	VG1845AN+923GGA	VG1845AN+923BGA	VG1845AN+923BUA
VG1845BG	3/4	4.7[1]	200	VG1845BG+923AGA	VG1845BG+923GGA	VG1845BG+923BGA	VG1845BG+923BUA
VG1845BL		7.4[1]		VG1845BL+923AGA	VG1845BL+923GGA	VG1845BL+923BGA	VG1845BL+923BUA
VG1845BN		11.7		VG1845BN+923AGA	VG1845BN+923GGA	VG1845BN+923BGA	VG1845BN+923BUA
VG1845CL	1	7.4[1]	200	VG1845CL+923AGA	VG1845CL+923GGA	VG1845CL+923BGA	VG1845CL+923BUA
VG1845CN		11.7[1]		VG1845CN+923AGA	VG1845CN+923GGA	VG1845CN+923BGA	VG1845CN+923BUA
VG1845CP		18.7		VG1845CP+923AGA	VG1845CP+923GGA	VG1845CP+923BGA	VG1845CP+923BUA
				Spring Return Port A Open — Valve Spring Return Counterclockwise			
				VA9208-AGA-2	**VA9208-GGA-2**	**VA9208-BGA-3**	**VA9208-BAA-3**
VG1845DN	1-1/4	11.7[1]	200	VG1845DN+928AGA	VG1845DN+928GGA	VG1845DN+938BGA	VG1845DN+938BAA
VG1845DP		18.7[1]		VG1845DP+928AGA	VG1845DP+928GGA	VG1845DP+938BGA	VG1845DP+938BAA
VG1845DR		29.2		VG1845DR+928AGA	VG1845DR+928GGA	VG1845DR+938BGA	VG1845DR+938BAA
VG1845EP	1-1/2	18.7[1]	200	VG1845EP+928AGA	VG1845EP+928GGA	VG1845EP+938BGA	VG1845EP+938BAA
VG1845ER		29.2[1]		VG1845ER+928AGA	VG1845ER+928GGA	VG1845ER+938BGA	VG1845ER+938BAA
VG1845ES		46.8		VG1845ES+928AGA	VG1845ES+928GGA	VG1845ES+938BGA	VG1845ES+938BAA
VG1845FR	2	29.2[1]	200	VG1845FR+928AGA	VG1845FR+928GGA	VG1845FR+938BGA	VG1845FR+938BAA
VG1845FS		46.8[1]		VG1845FS+928AGA	VG1845FS+928GGA	VG1845FS+938BGA	VG1845FS+938BAA
VG1845FT		73.7		VG1845FT+928AGA	VG1845FT+928GGA	VG1845FT+938BGA	VG1845FT+938BAA

The performance specifications are nominal and conform to acceptable industry standards. For applications at conditions beyond these specifications, consult the local Johnson Controls office. Johnson Controls, Inc. shall not be liable for damages resulting from misapplication or misuse of its products. © 2015 Johnson Controls, Inc.

VG1000 Series Three-Way, Stainless Steel Trim, NPT End Connections Ball Valves with Spring-Return Electric Actuators without Switches (Continued)

Three-Way — Spring Return without Switches (Not Rated for Steam Service) (Part 2 of 2)

Fluid Temperatures: -22 to 212°F (-30 to 100°C) Not Rated for Steam Service				AC 24 V			AC 85–264 V (VA9203) AC 120 V (VA9208)
Valve	**Size, in.**	**Cv (Port A/B)**	**Closeoff psig**	**Floating**	**0 to 10 VDC Proportional**	**On/Off**	**On/Off**
				Spring Return Port A Closed — Valve Spring Return Clockwise			
				VA9203-AGA-2Z	**VA9203-GGA-2Z**	**VA9203-BGA-2**	**VA9203-BUA-2**
VG1845AD	1/2	1.2[1]	200	VG1845AD+943AGA	VG1845AD+943GGA	VG1845AD+943BGA	VG1845AD+943BUA
VG1845AE		1.9[1]		VG1845AE+943AGA	VG1845AE+943GGA	VG1845AE+943BGA	VG1845AE+943BUA
VG1845AF		2.9[1]		VG1845AF+943AGA	VG1845AF+943GGA	VG1845AF+943BGA	VG1845AF+943BUA
VG1845AG		4.7[1]		VG1845AG+943AGA	VG1845AG+943GGA	VG1845AG+943BGA	VG1845AG+943BUA
VG1845AL		7.4[1]		VG1845AL+943AGA	VG1845AL+943GGA	VG1845AL+943BGA	VG1845AL+943BUA
VG1845AN		11.7		VG1845AN+943AGA	VG1845AN+943GGA	VG1845AN+943BGA	VG1845AN+943BUA
VG1845BG	3/4	4.7[1]	200	VG1845BG+943AGA	VG1845BG+943GGA	VG1845BG+943BGA	VG1845BG+943BUA
VG1845BL		7.4[1]		VG1845BL+943AGA	VG1845BL+943GGA	VG1845BL+943BGA	VG1845BL+943BUA
VG1845BN		11.7		VG1845BN+943AGA	VG1845BN+943GGA	VG1845BN+943BGA	VG1845BN+943BUA
VG1845CL	1	7.4[1]	200	VG1845CL+943AGA	VG1845CL+943GGA	VG1845CL+943BGA	VG1845CL+943BUA
VG1845CN		11.7[1]		VG1845CN+943AGA	VG1845CN+943GGA	VG1845CN+943BGA	VG1845CN+943BUA
VG1845CP		18.7		VG1845CP+943AGA	VG1845CP+943GGA	VG1845CP+943BGA	VG1845CP+943BUA
				Spring Return Port A Closed — Valve Spring Return Clockwise			
				VA9208-AGA-2	**VA9208-GGA-2**	**VA9208-BGA-3**	**VA9208-BAA-3**
VG1845DN	1-1/4	11.7[1]	200	VG1845DN+948AGA	VG1845DN+948GGA	VG1845DN+958BGA	VG1845DN+958BAA
VG1845DP		18.7[1]		VG1845DP+948AGA	VG1845DP+948GGA	VG1845DP+958BGA	VG1845DP+958BAA
VG1845DR		29.2		VG1845DR+948AGA	VG1845DR+948GGA	VG1845DR+958BGA	VG1845DR+958BAA
VG1845EP	1-1/2	18.7[1]	200	VG1845EP+948AGA	VG1845EP+948GGA	VG1845EP+958BGA	VG1845EP+958BAA
VG1845ER		29.2[1]		VG1845ER+948AGA	VG1845ER+948GGA	VG1845ER+958BGA	VG1845ER+958BAA
VG1845ES		46.8		VG1845ES+948AGA	VG1845ES+948GGA	VG1845ES+958BGA	VG1845ES+958BAA
VG1845FR	2	29.2[1]	200	VG1845FR+948AGA	VG1845FR+948GGA	VG1845FR+958BGA	VG1845FR+958BAA
VG1845FS		46.8[1]		VG1845FS+948AGA	VG1845FS+948GGA	VG1845FS+958BGA	VG1845FS+958BAA
VG1845FT		73.7		VG1845FT+948AGA	VG1845FT+948GGA	VG1845FT+958BGA	VG1845FT+958BAA

1. Valve has a characterizing disk.

Valve Assemblies with M9000-561 Thermal Barrier Installed — Rated for High-Temperature Fluid Service, Three-Way — Spring Return without Switches (Part 1 of 2)

Fluid Temperatures: -22 to 284°F (-30 to 140°C) Water and 15 psi Steam				AC 24 V			AC 85–264 V (VA9203) AC 120 V (VA9208)
Valve	**Size, in.**	**Cv (Port A/B)**	**Closeoff psig**	**Floating**	**0 to 10 VDC Proportional**	**On/Off**	**On/Off**
				Spring Return Port A Open — Valve Spring Return Counterclockwise			
				VA9203-AGA-2Z	**VA9203-GGA-2Z**	**VA9203-BGA-2**	**VA9203-BUA-2**
VG1845AD	1/2	1.2[1]	200	VG1845ADH923AGA	VG1845ADH923GGA	VG1845ADH923BGA	VG1845ADH923BUA
VG1845AE		1.9[1]		VG1845AEH923AGA	VG1845AEH923GGA	VG1845AEH923BGA	VG1845AEH923BUA
VG1845AF		2.9[1]		VG1845AFH923AGA	VG1845AFH923GGA	VG1845AFH923BGA	VG1845AFH923BUA
VG1845AG		4.7[1]		VG1845AGH923AGA	VG1845AGH923GGA	VG1845AGH923BGA	VG1845AGH923BUA
VG1845AL		7.4[1]		VG1845ALH923AGA	VG1845ALH923GGA	VG1845ALH923BGA	VG1845ALH923BUA
VG1845AN		11.7		VG1845ANH923AGA	VG1845ANH923GGA	VG1845ANH923BGA	VG1845ANH923BUA
VG1845BG	3/4	4.7[1]	200	VG1845BGH923AGA	VG1845BGH923GGA	VG1845BGH923BGA	VG1845BGH923BUA
VG1845BL		7.4[1]		VG1845BLH923AGA	VG1845BLH923GGA	VG1845BLH923BGA	VG1845BLH923BUA
VG1845BN		11.7		VG1845BNH923AGA	VG1845BNH923GGA	VG1845BNH923BGA	VG1845BNH923BUA
VG1845CL	1	7.4[1]	200	VG1845CLH923AGA	VG1845CLH923GGA	VG1845CLH923BGA	VG1845CLH923BUA
VG1845CN		11.7[1]		VG1845CNH923AGA	VG1845CNH923GGA	VG1845CNH923BGA	VG1845CNH923BUA
VG1845CP		18.7		VG1845CPH923AGA	VG1845CPH923GGA	VG1845CPH923BGA	VG1845CPH923BUA

The performance specifications are nominal and conform to acceptable industry standards. For applications at conditions beyond these specifications, consult the local Johnson Controls office. Johnson Controls, Inc. shall not be liable for damages resulting from misapplication or misuse of its products. © 2015 Johnson Controls, Inc.

VG1000 Series Three-Way, Stainless Steel Trim, NPT End Connections Ball Valves with Spring-Return Electric Actuators without Switches (Continued)

Valve Assemblies with M9000-561 Thermal Barrier Installed — Rated for High-Temperature Fluid Service, Three-Way — Spring Return without Switches (Part 2 of 2)

Fluid Temperatures: -22 to 284°F (-30 to 140°C) Water and 15 psi Steam				AC 24 V			AC 85–264 V (VA9203) AC 120 V (VA9208)
Valve	**Size, in.**	**Cv (Port A/B)**	**Closeoff psig**	**Floating**	**0 to 10 VDC Proportional**	**On/Off**	**On/Off**
				Spring Return Port A Open — Valve Spring Return Counterclockwise			
				VA9208-AGA-2	**VA9208-GGA-2**	**VA9208-BGA-3**	**VA9208-BAA-3**
VG1845DN	1-1/4	11.7[1]	200	VG1845DNH928AGA	VG1845DNH928GGA	VG1845DNH938BGA	VG1845DNH938BAA
VG1845DP		18.7[1]		VG1845DPH928AGA	VG1845DPH928GGA	VG1845DPH938BGA	VG1845DPH938BAA
VG1845DR		29.2		VG1845DRH928AGA	VG1845DRH928GGA	VG1845DRH938BGA	VG1845DRH938BAA
VG1845EP	1-1/2	18.7[1]	200	VG1845EPH928AGA	VG1845EPH928GGA	VG1845EPH938BGA	VG1845EPH938BAA
VG1845ER		29.2[1]		VG1845ERH928AGA	VG1845ERH928GGA	VG1845ERH938BGA	VG1845ERH938BAA
VG1845ES		46.8		VG1845ESH928AGA	VG1845ESH928GGA	VG1845ESH938BGA	VG1845ESH938BAA
VG1845FR	2	29.2[1]	200	VG1845FRH928AGA	VG1845FRH928GGA	VG1845FRH938BGA	VG1845FRH938BAA
VG1845FS		46.8[1]		VG1845FSH928AGA	VG1845FSH928GGA	VG1845FSH938BGA	VG1845FSH938BAA
VG1845FT		73.7		VG1845FTH928AGA	VG1845FTH928GGA	VG1845FTH938BGA	VG1845FTH938BAA
				Spring Return Port A Closed — Valve Spring Return Clockwise			
				VA9203-AGA-2Z	**VA9203-GGA-2Z**	**VA9203-BGA-2**	**VA9203-BUA-2**
VG1845AD	1/2	1.2[1]	200	VG1845ADH943AGA	VG1845ADH943GGA	VG1845ADH943BGA	VG1845ADH943BUA
VG1845AE		1.9[1]		VG1845AEH943AGA	VG1845AEH943GGA	VG1845AEH943BGA	VG1845AEH943BUA
VG1845AF		2.9[1]		VG1845AFH943AGA	VG1845AFH943GGA	VG1845AFH943BGA	VG1845AFH943BUA
VG1845AG		4.7[1]		VG1845AGH943AGA	VG1845AGH943GGA	VG1845AGH943BGA	VG1845AGH943BUA
VG1845AL		7.4[1]		VG1845ALH943AGA	VG1845ALH943GGA	VG1845ALH943BGA	VG1845ALH943BUA
VG1845AN		11.7		VG1845ANH943AGA	VG1845ANH943GGA	VG1845ANH943BGA	VG1845ANH943BUA
VG1845BG	3/4	4.7[1]	200	VG1845BGH943AGA	VG1845BGH943GGA	VG1845BGH943BGA	VG1845BGH943BUA
VG1845BL		7.4[1]		VG1845BLH943AGA	VG1845BLH943GGA	VG1845BLH943BGA	VG1845BLH943BUA
VG1845BN		11.7		VG1845BNH943AGA	VG1845BNH943GGA	VG1845BNH943BGA	VG1845BNH943BUA
VG1845CL	1	7.4[1]	200	VG1845CLH943AGA	VG1845CLH943GGA	VG1845CLH943BGA	VG1845CLH943BUA
VG1845CN		11.7[1]		VG1845CNH943AGA	VG1845CNH943GGA	VG1845CNH943BGA	VG1845CNH943BUA
VG1845CP		18.7		VG1845CPH943AGA	VG1845CPH943GGA	VG1845CPH943BGA	VG1845CPH943BUA
				Spring Return Port A Closed — Valve Spring Return Clockwise			
				VA9208-AGA-2	**VA9208-GGA-2**	**VA9208-BGA-3**	**VA9208-BAA-3**
VG1845DN	1-1/4	11.7[1]	200	VG1845DNH948AGA	VG1845DNH948GGA	VG1845DNH958BGA	VG1845DNH958BAA
VG1845DP		18.7[1]		VG1845DPH948AGA	VG1845DPH948GGA	VG1845DPH958BGA	VG1845DPH958BAA
VG1845DR		29.2		VG1845DRH948AGA	VG1845DRH948GGA	VG1845DRH958BGA	VG1845DRH958BAA
VG1845EP	1-1/2	18.7[1]	200	VG1845EPH948AGA	VG1845EPH948GGA	VG1845EPH958BGA	VG1845EPH958BAA
VG1845ER		29.2[1]		VG1845ERH948AGA	VG1845ERH948GGA	VG1845ERH958BGA	VG1845ERH958BAA
VG1845ES		46.8		VG1845ESH948AGA	VG1845ESH948GGA	VG1845ESH958BGA	VG1845ESH958BAA
VG1845FR	2	29.2[1]	200	VG1845FRH948AGA	VG1845FRH948GGA	VG1845FRH958BGA	VG1845FRH958BAA
VG1845FS		46.8[1]		VG1845FSH948AGA	VG1845FSH948GGA	VG1845FSH958BGA	VG1845FSH958BAA
VG1845FT		73.7		VG1845FTH948AGA	VG1845FTH948GGA	VG1845FTH958BGA	VG1845FTH958BAA

1. Valve has a characterizing disk.

The performance specifications are nominal and conform to acceptable industry standards. For applications at conditions beyond these specifications, consult the local Johnson Controls office. Johnson Controls, Inc. shall not be liable for damages resulting from misapplication or misuse of its products. © 2015 Johnson Controls, Inc.

VG1000 Series Three-Way, Stainless Steel Trim, NPT End Connections Ball Valves with Spring-Return Electric Actuators without Switches (Continued)

Technical Specifications

VG1000 Series Three-Way, Stainless Steel Trim, NPT End Connections Ball Valves with Spring-Return Electric Actuators without Switches		
Service[1]		Hot Water, Chilled Water, 50/50 Glycol Solutions, and 15 psig (103 kPa) Saturated Steam for HVAC Systems
Fluid Temperature Limits	**Water**	-22 to 284°F (-30 to 140°C)
	Steam	15 psig (103 kPa) at 250°F (121°C)
Maximum Actuator Fluid Temperature Limits	**212°F (100°C)**	VA9203 Series Spring-Return Actuators VA9208 Series Spring-Return Actuators
	284°F (140°C)	VA9203 Series Spring-Return Actuators with M9000-561 Thermal Barrier Installed VA9208 Series Spring-Return Actuators with M9000-561 Thermal Barrier Installed
Valve Body Pressure Rating	**Water**	580 psig (4,000 kPa) at 203°F (95°C) (PN40) 464 psig (3,196 kPa) at 284°F (140°C) (PN40)
	Steam	15 psig (103 kPa) Saturated Steam (Applies to VA9208 Series Spring Return Actuator with M9000-561 Thermal Barrier Installed)
Maximum Closeoff Pressure		200 psid (1,378 kPa)
Maximum Recommended Operating Pressure Drop		50 psid (340 kPa)
Flow Characteristics	**Three-Way**	Equal Percentage Flow Characteristics of In-Line Port A (Coil) and Linear Flow Characteristics of Angle Port B (Bypass)
Rangeability[2]		Greater than 500:1
Minimum Ambient Operating Temperature	**-22°F (-30°C)**	VA9203 Series Spring-Return Actuators
	-40°F (-40°C)	VA9208 Series Spring-Return Actuators
Maximum Ambient Operating Temperature[3] **(Limited by the Actuator and Linkage)**	**Direct Mount**	140°F (60°C): VA9208 Series Spring-Return Actuators
Leakage		0.01% of Maximum Flow per ANSI/FCI 70-2, Class 4
		1% of Maximum Flow
End Connections		National Pipe Thread (NPT)
Materials	**Body**	Forged Brass
	Ball	300 Series Stainless Steel
	Blowout-Proof Stem	300 Series Stainless Steel
	Seats	Graphite-Reinforced PTFE with Ethylene Propylene Diene Monomer (EPDM) O-Ring Backing
	Stem Seals	EPDM Double O-Rings
	Characterizing Disk	Amodel® AS-1145HS Polyphthalamide Resin
Compliance CRN		0C16910.5C

1. Proper water treatment is recommended; refer to the VDI 2035 Guideline.
2. Rangeability is defined as the ratio of maximum controllable flow to minimum controllable flow.
3. In steam applications, install the valve with the stem horizontal to the piping and wrap the valve and piping with insulation.

The performance specifications are nominal and conform to acceptable industry standards. For applications at conditions beyond these specifications, consult the local Johnson Controls office. Johnson Controls, Inc. shall not be liable for damages resulting from misapplication or misuse of its products. © 2015 Johnson Controls, Inc.

ExMax ¼ turn actuators – size S

ExMax - ... - Y
ExMax - ... - YF
ExMax - ... - CTS
ExMax - ... - VAS

Subject to change!

Electrical, explosion proof rotary actuators
3-pos. / 0...10 V DC / 4...20 mA control mode, with feedback, 24...240 V AC/DC, 95° angle of rotation
5/10 Nm, 15/30 Nm without and 5/10 Nm, 15 Nm with safety operation (spring return)
ATEX tested in acc. with directive 2014/34/EU for zone 1, 2, 21, 22

Compact. Easy installation. Universal. Cost effective. Safe.

Type	Torque	Supply	Motor running time	Spring return	Control mode	Feedback	Wiring diagram
ExMax- 5.10 - Y	5 / 10 Nm	24...240 V AC/DC	7,5 / 15 / 30 / 60 / 120 s/90°	–	3-pos., 0...10 V DC, 4...20 mA	0...10 V DC, 4...20 mA	SB 5.0 – 5.3
ExMax-15.30 - Y	15 / 30 Nm	24...240 V AC/DC	7,5 / 15 / 30 / 60 / 120 s/90°	–	3-pos., 0...10 V DC, 4...20 mA	0...10 V DC, 4...20 mA	SB 5.0 – 5.3
ExMax- 5.10 - YF	5 / 10 Nm	24...240 V AC/DC	7,5 / 15 / 30 / 60 / 120 s/90°	3 or 10 s/90°	3-pos., 0...10 V DC, 4...20 mA	0...10 V DC, 4...20 mA	SB 5.0 – 5.3
ExMax- 15 - YF	15 Nm	24...240 V AC/DC	7,5 / 15 / 30 / 60 / 120 s/90°	3 or 10 s/90°	3-pos., 0...10 V DC, 4...20 mA	0...10 V DC, 4...20 mA	SB 5.0 – 5.3
ExMax- ... - CTS	Types as above with aluminium housing and seawater resistant coating (cable glands brass nickel-plated)						
ExMax- ... - VAS	Types as above with stainless steel housing for aggressive ambient (cable glands brass nickel-plated)						

Product views and applications

Safety damper



Ball valve



Throttle valve





Description

The ExMax actuators are a revolution for safety, control and shut-off dampers, VAV systems, ball valves, throttle valves and other motorized applications for HVAC systems in chemical, pharmaceutical, industrial and offshore/onshore plants, for use in Ex-areas zone 1, 2 (gas) and zone 21, 22 (dust).

Highest protection class (ATEX) and IP66 protection, small dimensions, only 3,5 kg weight, universal functions and technical data, an integrated heater and an optional stainless steel housing guarantee safe operation even under difficult environmental conditions. High quality brushless motors guarantee long life.

All actuators are programmable and adjustable on site. Special tools or equipment are not required. Motor running times and torques as well as spring return times, according to the actuator type, are selectable or adjustable on site. The integrated universal power supply is self adaptable to input voltages in the range of 24...240 V AC/DC. Furthermore it is possible to perform control signal inverting and compulsion control by certain connections. The actuators are 100 % overload protected and self locking.

...Max-...-YF actuators are equipped with spring return fail safe function. Standard shaft connection is a double square direct coupling with 12 × 12 mm.

Different accessories are available to adapt auxiliary switches, terminal boxes or adaptions for ball valves and throttle valves and other armatures.

Highlights

- ▶ For all type of gas, mists, vapours and dust for use in zone 1, 2, 21 and 22
- ▶ Universal supply unit from 24…240 V AC/DC
- ▶ 5 different motor running times 7,5–15–30–60–120 s/90°, adjustable on site
- ▶ 2 different spring return running times ~ 3–10 s/90°, selectable on site
- ▶ 3-pos. and 0...10 V DC, 4...20 mA control mode with or without spring return function
- ▶ Feedback signals 0...10 V DC and 4...20 mA
- ▶ Reverse function
- ▶ 5–10–15–30 Nm actuators in the same housing size
- ▶ 100 % overload protected and self locking
- ▶ Compact design and small dimension (L × W × H = 210 × 95 × 80 mm)
- ▶ Direct coupling to the damper shaft with double square connection 12 × 12 mm
- ▶ 95° angle of rotation inclusive 5° pretension
- ▶ Robust aluminium housing (optional with seawater resistant coating) or in stainless steel
- ▶ IP66 protection
- ▶ Simple manual override included + preparation for comfortable manual override
- ▶ Gear made of stainless steel and sinter metal
- ▶ Weight only ~ 3,5 kg
- ▶ Integrated heater for ambient temperatures down to −40 °C
- ▶ Integrated safety temperature sensor
- ▶ Integrated equipment for manual adjustment (push button, lamp, switch)
- ▶ Preparation for adaptable and adjustable auxiliary switches type ...Switch

Schischek GmbH Germany, Muehlsteig 45, Gewerbegebiet Sued 5, 90579 Langenzenn, Tel. +49 9101 9081-0, Fax +49 9101 9081-77, E-Mail info-de@schischek.com

Technical data	ExMax- 5.10 -Y	ExMax- 15.30 -Y	ExMax- 5.10 -YF	ExMax- 15 -YF
Torque motor (min.)	5 / 10 Nm selectable on site	15 / 30 Nm selectable on site	5 / 10 Nm selectable on site	15 Nm
Torque spring (F)	–	–	min. 10 Nm	min. 15 Nm
Torque blockade	In blockade and end positions torques are higher than above specified torques for motor and spring.			
Dimensioning of external load	Upon spring return the external load should be max. 80 % of torque spring (F).			
Supply voltage / frequency	24...240 V AC/DC, ± 10 %, self adaptable, frequency 50...60 Hz ± 20 %			
Power consumption	max. starting currents see ⓘExtra information (in acc. with voltage, $I_{start} >> I_{rated}$), approx. 5 W holding power, approx. 16 W for heater			
Protection class	Class I (grounded)			
Angle of rotation and indication	95° incl. ~ 5° pretension, mechanical value indication			
Working direction	Selectable by left/right mounting to the damper/valve shaft			
Motor running times	7,5 / 15 / 30 / 60 / 120 s/90° selectable on site			
Motor	Brushless DC motor			
Control mode Y	3-pos., 0…10 V DC, 4…20 mA in acc. with wiring, selectable on site. Galvanic separation between supply and Y-signal			
Feedback signal U	0…10 V DC, 4…20 mA in acc. with wiring, selectable on site, both signals are available at the same time			
Resistance of Y and U signals	**Input signal:** Y_U 0...10 V DC at 10 kΩ, Y_I 4...20 mA at 100 Ω. **Feedback signal:** U_U 0...10 V DC at 2.000...∞ Ω, U_I 4...20 mA at 0...800 Ω			
Reverse function	Bridge between terminals 3–4 (signal line) effects a reverse function of input and output signals (Y and U)			
Compulsion control	In modulation mode an On-off compulsion control can be performed by external connection/wiring independently from the modulating signal			
Adjustment of Y and U	In case of external mechanical limitation of the angle of rotation, it is possible to perform an adjustment drive started by pushing the button (T)			
Spring return (F)	–	–	spring return upon voltage interruption	
Spring return response time	–	–	up to 1 sec. after voltage interruption	
Spring return running time (F)	–	–	~ 3 or 10 s/90° selectable on site	
3 sec. mode – spring return	–	–	~ 3 to 4 s/90° angle of rotation acc. to external load	
Safety operations at 10 sec. (F)	–	–	min. 10,000 acc. to construction of damper and ambient	
at 3 sec. (F)	–	–	min. 1,000 acc. to construction of damper and ambient	
Axle of the actuator	Double square 12 × 12 mm, direct coupling, 100 % overload protected and self locking up to 15 Nm			
Electrical connection	2 cable glands ~ 1 m each, wire cross section 0.5 mm², equipotential bonding 4 mm².			
Connections in hazardous areas require an Ex-e terminal box!				
Diameter of cable	~ Ø 7.1 + 7.4 mm	~ Ø 7.1 + 7.4 mm	~ Ø 7.4 mm each	~ Ø 7.4 mm each
Cable gland	M16 × 1.5 mm			
Manual override	Use delivered socket wrench, max. 4 Nm			
Heater	Integrated, controlled heater for ambient temperature down to −40 °C			
Housing material	Aluminium die-cast housing, coated. Optional with seawater resistant coating (...-CTS) or stainless steel housing,			
№ 1.4581 / UNS-J92900 / similar AISI 316Nb (...-VAS)				
Dimensions (L × W × H)	210 × 95 × 80 mm, for diagrams see ⓘExtra information			
Weight	~ 3,5 kg aluminium housing, stainless steel ~ 7 kg			
Ambients	Storage temperature −40…+70 °C, working temperature −40…+40 °C at T6 and −40…+50 °C at T5			
Humidity	0...90 % rH, non condensing			
Operating 7,5 sec. motor run time	at 24 V: S3 – 50 % ED intermittent mode (ED = duty cycle)			
≥ 15 sec. motor run time	at 15 / 30 / 60 / 120 s 100 % of ED is permitted			
Accuracy electrically	~ 100 steps			
Self adjustment	Before initial operation you need to start the self adjustment mode for “gentle” blockade and adjustment of rotation angle			
Wiring diagrams	SB 5.0 / 5.1 / 5.2 / 5.3			
Scope of delivery	Actuator with 2 × 1 m cable, 4 screws M4 × 100 mm, 4 nuts M4, Allen key for simple manual override			
Parameter at delivery	5 Nm, 30 s/90°	15 Nm, 30 s/90°	5 Nm, 30 s/90°	15 Nm, 30 s/90°

Approbations

ATEX directive	2014/34/EU
EC type-approved	PTB 04 ATEX 1028 X
IECEx certified	IECEx PTB 07.0057X
Approval for gas	II 2 (1) G Ex d [ia] IIC T6, T5
Types ...-CTS	II 2 (1) G Ex d [ia] IIB T6, T5
Approval for dust	II 2 (1) D Ex tD [iaD] A21 IP66 T80, T95°C
CE identification	CE № 0158
EMC directive	2014/30/EU
Low voltage directive	2014/35/EU
Enclosure protection	IP66 in acc. with EN 60529
EAC	№ TC RU C-DE.ГБ08.B.01510

Special solutions and accessories

...-CTS	Types in aluminium housing with seawater resistant coating, parts nickel-plated
...-VAS	Types in stainless steel housing, parts nickel-plated
ExBox-Y/S...	Ex-e terminal boxes for zone 1, 2, 21, 22
MKK-S	Mounting bracket for boxes type ...Box-... directly on actuator
ExSwitch	2 external aux. switches, adjustable for zone 1, 2, 21, 22
HV-S...	Comfortable manual override for...Max actuators size S
KB-S	Clamp for damper shafts Ø 10...20 mm and □ 10...16 mm
AR-12-xx	Reduction part for 12 mm square connection to 11, 10, 9 or 8 mm shafts
Kit-S8	Cable glands nickel-plated
Adaptions	for dampers and valves on request

Schischek GmbH Germany, Muehlsteig 45, Gewerbegebiet Sued 5, 90579 Langenzenn, Tel. +49 9101 9081-0, Fax +49 9101 9081-77, E-Mail info-de@schischek.com

Electrical connection

All actuators are equipped with a universal supply unit working at a voltage range from 24...240 V AC/DC. The supply unit is self adjusting to the connected voltage!
The safety operation of the spring return function works if the supply voltage is cut.
For electrical connection inside hazardous areas an Ex-e terminal box, certificated in acc. with ATEX is required (e.g. ExBox).
An over-current protection fuse < 10 A has to be provided by installer.
Note: the initial current is appr. 2 A for 1 second.

Modulating / 3-pos. – with / without spring return SB 5.0

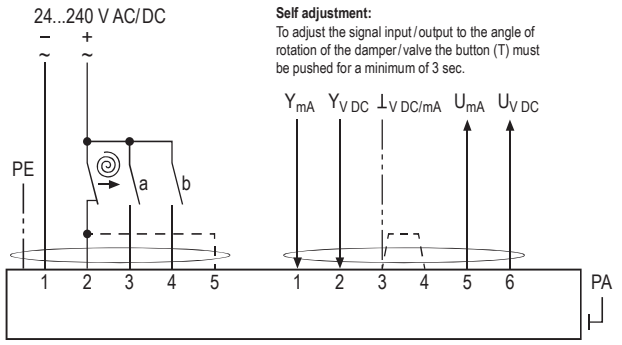

Self adjustment:
To adjust the signal input / output to the angle of rotation of the damper / valve the button (T) must be pushed for a minimum of 3 sec.

Selection of running time for spring return:
Spring return in ~ 10 s = Standard wiring
Spring return in ~ 3 s = Additional wiring on terminal 5

Reverse function:
Bridge 3–4 reverses the input and output signals

Function and enforcement control of switch a and b in modulating mode:
- **a** closed – **Forced-ON** (OFF) in acc. to left / right mounting of actuator
- **b** closed – **Forced-OFF** (ON) in acc. to left / right mounting of actuator

Modulating – with / without spring return (no enforcement) SB 5.1

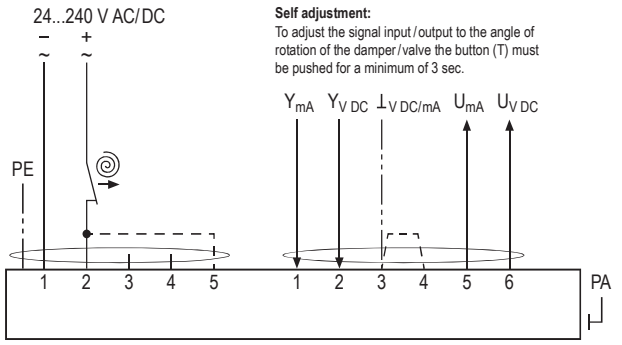

Self adjustment:
To adjust the signal input / output to the angle of rotation of the damper / valve the button (T) must be pushed for a minimum of 3 sec.

Selection of running time for spring return:
Spring return in ~ 10 s = Standard wiring
Spring return in ~ 3 s = Additional wiring on terminal 5

Reverse function:
Bridge 3–4 reverses the input and output signals

Modulating – with / without spring return (no feedback) SB 5.2

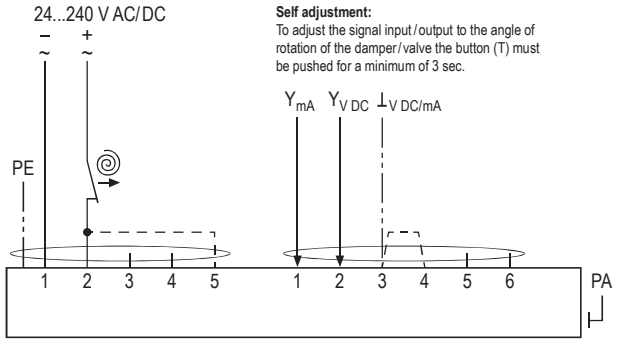

Self adjustment:
To adjust the signal input / output to the angle of rotation of the damper / valve the button (T) must be pushed for a minimum of 3 sec.

Selection of running time for spring return:
Spring return in ~ 10 s = Standard wiring
Spring return in ~ 3 s = Additional wiring on terminal 5

Reverse function:
Bridge 3–4 reverses the input signals

3-pos. – with / without spring return + feedback SB 5.3

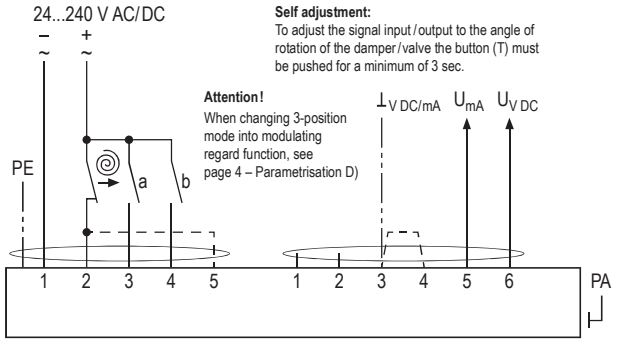

Self adjustment:
To adjust the signal input / output to the angle of rotation of the damper / valve the button (T) must be pushed for a minimum of 3 sec.

Attention!
When changing 3-position mode into modulating regard function, see page 4 – Parametrisation D)

Selection of running time for spring return:
Spring return in ~ 10 s = Standard wiring
Spring return in ~ 3 s = Additional wiring on terminal 5

Reverse function:
Bridge 3–4 reverses the output signals

3-pos. control mode:
- **a** closed, **b** open – **ON** (OFF) in acc. to left / right mounting of actuator
- **b** closed, **a** open – **OFF** (ON) in acc. to left / right mounting of actuator

Installation

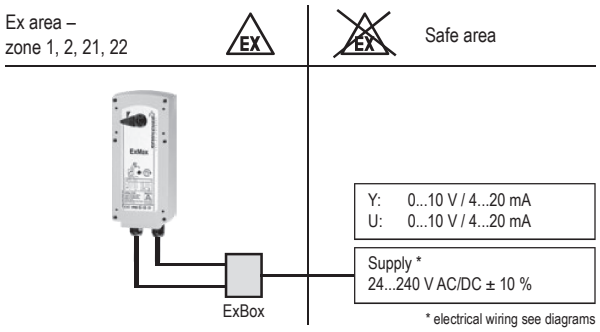

Important information for installation and operation

A. Installation, commissioning, maintenance

All national and international standards, rules and regulations for hazardous Ex-areas must be complied. Certified apparatus must be installed in accordance with manufacturer instructions. If the equipment is used in a manner not specified by the manufacturer, the safety protection provided by the equipment may be impaired. For electrical installations design, selection and erection, EN / IEC 60079-14 can be used.
For electrical connection an Ex-e terminal box is required (e.g. ExBox-...).
Attention: If the actuator is put out of operation all Ex rules and regulations must be applied. You have to cut the supply voltage before opening the terminal box!
The cables of the actuator must be installed in a fixed position and protected against mechanical and thermical damage. Connect potential earth. Avoid temperature transfer from armature to actuator! Close all openings with min. IP66.
For outdoor installation a protective weather shield against sun, rain and snow should be applied to the actuator as well as a constant supply at terminal 1 and 2 for the integrated heater. During commissioning apply a self adjustment drive.

continue next page

Schischek GmbH Germany, Muehlsteig 45, Gewerbegebiet Sued 5, 90579 Langenzenn, Tel. +49 9101 9081-0, Fax +49 9101 9081-77, E-Mail info-de@schischek.com

Important information for installation and operation

Actuators are maintenance free. An annual inspection is recommended. For electrical installations inspection and maintenance, EN/IEC 60079-17 can be used. Ex-actuators must not be opened by the customer.

B. Manual override

Manual override only if supply voltage is cut. Use delivered socket wrench with slow motions, usage can be tight. **Attention:** Releasing or letting go the Allen key too fast at manual operating actuators with spring return causes risk of injury!

C. Shaft connection, selection of running time

Actuators are equipped with a direct coupling double square shaft connection of 12 × 12 mm. For round shafts adaptors/clamping connection (accessories, e.g. KB-S) are available. The housing of the actuator is axially symmetrically built to select Open-close direction of the spring return function by left-right mounting. Using the 10-position switch different motor running times and spring return running times can be selected on site in acc. to the actuator type.

D. 3-position control mode

...Max actuators are in the best way suitable for the 3-pos. operation. To protect such elements as gears and mounting elements against harmful influences like minimum pulse time, ...Max actuators are protected via internal electronics. It ignores impulses < 0.5 s, the cyclic duration must be min. 0.5 s. At changing direction the pause is 1 s.

E. Spring return

Spring return function works only if the supply voltage for terminal 1 or 2 is cut. In the event of an electrical interruption, the spring returns to its end position even if supply voltage is available again during return function. Thereafter operation will continue.

F. Operation at ambient temperatures below −20 °C

All actuators are equipped with a regulated integrated heating device designed for employments down to −40 °C ambient temperature. The heater will be supplied automatically by connecting the constant voltage supply on the clamps 1 and 2.

1. After mounting the actuator must bei immediately electrically connected.
2. The heater switches on automatically when actuator reaches internally −20 °C. It heats up the actuator to a proper working temperature, then heater switches off automatically. Actuator will not run during heating process.
3. The adjustment options are only ensured after this heating up period.

G. Excess temperatures

In acc. to the ATEX rules and regulations Ex actuators must be protected against excess temperature. The internal thermostat works as a maximum limiter and, in the event of failure at incorrect temperatures, shuts off the actuator irreversible. An upstream connected temperature sensor stops the actuator before reaching its max. temperature. This safety feature is reversible, after cooling down the actuator is completely functional again. In this case the failure must be eliminated immediately on site!

H. Synchron mode

Do not connect several actuators to one shaft or link mechanically together.

I. Mechanical protection

Actuators must be operated with a minimum external load.
After installing the actuator to the damper/armature a self adjustment drive has to be performed in order to protect the damper/armature against mechanical overload.
During operation the actuator reduces briefly its speed (motor power) before reaching the end position for a "gentle" blockade/stop.

J. Intrinsically safe circuits

The actuator has a flameproof enclosure acc. to EN 60079. The supply of the push button (adjustment drive), the 10-position switch (adjustment of torque and running time) and the LED indicator is performed intrinsically safe!

ⓘ Extra information (see additional data sheet)

Additional technical information, dimensions, installation instruction, illustration and failure indication

Parameters, adjustments and failure indication

Switch – Push button – Lamp for adjustment (behind the blanking plug)

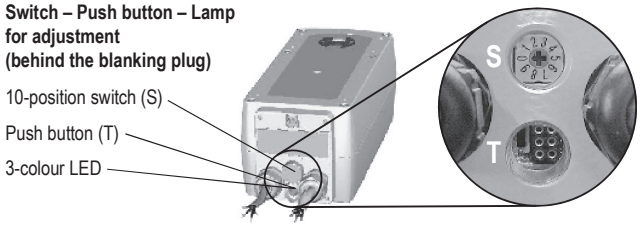

Parameter selection

Example:
ExMax-15.30-Y

Requested parameter:
Torque 30 Nm
Motor running time 30 s/90°

Result:
Switch position 07

Type		Torques	
ExMax- 5.10-Y ▶		5 Nm	10 Nm
ExMax- 15.30-Y ▶		15 Nm	**30 Nm**
ExMax- 5.10-YF ▶		5 Nm	10 Nm
ExMax- 15-YF ▶		15 Nm	
		▼	▼
Running times		**Position of switch (S)**	
7,5 s/90°	▶	00	05
15 s/90°	▶	01	06
30 s/90°	▶	02	07
60 s/90°	▶	03	08
120 s/90°	▶	04	09

Functions, adjustments and parameters

A) Self adjustment of angle of rotation
Turn switch (S) to position 02 (low torque) or 07 (high torque). Press button (T) for a minimum of 3 seconds. The actuator drives to both end positions and detects the blocking positions. The LED flashes GREEN during adjustment.
The adjustment takes about 60 seconds (30 sec. "On", 30 sec. "Off").

B) Selecting motor running time and torque
Adjust parameters only if actuator is in idle state or without applied potential.
Turn switch (S) to the position required for the intended operation acc. to table above. The selected parameters will be carried out at the actuator's next operation.

C) Selecting spring return time
Spring return time is selected by wiring.

D) Changing modulating operation to 3-pos. operation with feedback
Modulating mode: The LED lights GREEN, potential applied.
Press button (T) briefly 3 times:
- each for at least 0.2 seconds
- altogether within max. 5 seconds

The LED changes from steady GREEN to steady YELLOW*.

E) Changing 3-pos. operation with feedback to modulating operation
3-pos. mode: The LED lights YELLOW*, potential applied.
Press button (T) briefly 3 times.
The LED changes from steady YELLOW* to steady GREEN.

F) Additional information for control in 3-pos. operation with feedback

a closed, b open	= direction I	a and b closed	= motor doesn't work
b closed, a open	= direction II	a and b open	= motor doesn't work

The rotation direction (I and II) depends on left/right mounting of the actuator to the damper. To reverse the rotation direction (by motor) exchange the electrical wiring of terminal 3 and 4.
In 3-pos. operation with feedback the Y-inputs are without function.

G) Inverting <=> Reverting
Bridging signal wires 3–4 (cable B) inverts the function of input signals Y and feedback signals U.

* Note: "YELLOW" may vary from yellowish to orange.

⚠ Attention ⚠

During commissioning apply a self adjustment drive.
Regard duty cycle at motor running times!
Never use spring return actuators without external load.

Schischek GmbH Germany, Muehlsteig 45, Gewerbegebiet Sued 5, 90579 Langenzenn, Tel. +49 9101 9081-0, Fax +49 9101 9081-77, E-Mail info-de@schischek.com

Code No. LIT-1900222
Issued January 6, 2015

VG1000 Series Two-Way, Stainless Steel Trim, NPT End Connections Ball Valves with Spring-Return Electric Actuators without Switches

Description

VG1000 Series Ball Valves are designed to regulate the flow of hot or chilled water and, for some models, low pressure steam in response to the demand of a controller in HVAC systems. Available in sizes 1/2 through 2 in. (DN15 through DN50), this family of two- and three-way forged brass valves is factory or field mounted to Johnson Controls® VA9104, M9106, M9109, and M9100 Series Non-Spring-Return and VA9203 and VA9208 Series Spring-Return Electric Actuators for on/off, floating, or proportional control.

Refer to the *VG1000 Series Forged Brass Ball Valves Product Bulletin (LIT-977132)* for important product application information.

Features

- Forged Brass Body — provides 580 psig static pressure rating.
- 200 psi Closeoff Pressure Rating — provides tight shutoff.
- Graphite-Reinforced Polytetrafluoroethylene (PTFE) Seats — include 15% graphite-reinforced ball seals, providing better wear resistance.
- 300 Series Stainless Steel Ball and Stem Assembly — tolerates high-temperature water or 15 psi saturated steam with fluid temperatures of -22 to 284°F (-30 to 140°C) or where a higher degree of corrosion protection is desired.
- 500:1 Rangeability — provides accurate control under all load conditions.

Repair Information

If the VG1000 Series Ball Valve fails to operate within its specifications, replace the valve body, actuator, or entire assembly. For replacement parts, contact the nearest Johnson Controls representative.



VG1000 Series Two-Way, Spring-Return, Stainless Steel Ball and Stem Ball Valve Assemblies without End Switches

Selection Charts

Two-Way — Spring Return Valves — Without Switches (Not Rated for Steam Service) (Part 1 of 2)

Fluid Temperatures: -22 to 212°F (-30 to 100°C) Not Rated for Steam Service				AC 24 V			AC 85–264 V (VA9203) AC 120 V (VA9208)
Valve	**Size, in.**	**Cv**	**Closeoff psig**	**Floating**	**DC 0 to 10 V Proportional**	**On/Off**	**On/Off**
				Spring Return Open — Valve Normally Open			
				VA9203-AGA-2Z	**VA9203-GGA-2Z**	**VA9203-BGA-2**	**VA9203-BUA-2**
VG1245AD	1/2	1.2[1]	200	VG1245AD+923AGA	VG1245AD+923GGA	VG1245AD+923BGA	VG1245AD+923BUA
VG1245AE		1.9[1]		VG1245AE+923AGA	VG1245AE+923GGA	VG1245AE+923BGA	VG1245AE+923BUA
VG1245AF		2.9[1]		VG1245AF+923AGA	VG1245AF+923GGA	VG1245AF+923BGA	VG1245AF+923BUA
VG1245AG		4.7[1]		VG1245AG+923AGA	VG1245AG+923GGA	VG1245AG+923BGA	VG1245AG+923BUA
VG1245AL		7.4[1]		VG1245AL+923AGA	VG1245AL+923GGA	VG1245AL+923BGA	VG1245AL+923BUA
VG1245AN		11.7		VG1245AN+923AGA	VG1245AN+923GGA	VG1245AN+923BGA	VG1245AN+923BUA
VG1245BG	3/4	4.7[1]	200	VG1245BG+923AGA	VG1245BG+923GGA	VG1245BG+923BGA	VG1245BG+923BUA
VG1245BL		7.4[1]		VG1245BL+923AGA	VG1245BL+923GGA	VG1245BL+923BGA	VG1245BL+923BUA
VG1245BN		11.7		VG1245BN+923AGA	VG1245BN+923GGA	VG1245BN+923BGA	VG1245BN+923BUA
VG1245CL	1	7.4[1]	200	VG1245CL+923AGA	VG1245CL+923GGA	VG1245CL+923BGA	VG1245CL+923BUA
VG1245CN		11.7[1]		VG1245CN+923AGA	VG1245CN+923GGA	VG1245CN+923BGA	VG1245CN+923BUA
VG1245CP		18.7		VG1245CP+923AGA	VG1245CP+923GGA	VG1245CP+923BGA	VG1245CP+923BUA
				Spring Return Open — Valve Normally Open			
				VA9208-AGA-2	**VA9208-GGA-2**	**VA9208-BGA-3**	**VA9208-BAA-3**
VG1245DN	1-1/4	11.7[1]	200	VG1245DN+928AGA	VG1245DN+928GGA	VG1245DN+938BGA	VG1245DN+938BAA
VG1245DP		18.7[1]		VG1245DP+928AGA	VG1245DP+928GGA	VG1245DP+938BGA	VG1245DP+938BAA
VG1245DR		29.2		VG1245DR+928AGA	VG1245DR+928GGA	VG1245DR+938BGA	VG1245DR+938BAA
VG1245EP	1-1/2	18.7[1]	200	VG1245EP+928AGA	VG1245EP+928GGA	VG1245EP+938BGA	VG1245EP+938BAA
VG1245ER		29.2[1]		VG1245ER+928AGA	VG1245ER+928GGA	VG1245ER+938BGA	VG1245ER+938BAA
VG1245ES		46.8		VG1245ES+928AGA	VG1245ES+928GGA	VG1245ES+938BGA	VG1245ES+938BAA
VG1245FR	2	29.2[1]	200	VG1245FR+928AGA	VG1245FR+928GGA	VG1245FR+938BGA	VG1245FR+938BAA
VG1245FS		46.8[1]		VG1245FS+928AGA	VG1245FS+928GGA	VG1245FS+938BGA	VG1245FS+938BAA
VG1245FT		73.7		VG1245FT+928AGA	VG1245FT+928GGA	VG1245FT+938BGA	VG1245FT+938BAA

The performance specifications are nominal and conform to acceptable industry standards. For applications at conditions beyond these specifications, consult the local Johnson Controls office. Johnson Controls, Inc. shall not be liable for damages resulting from misapplication or misuse of its products. © 2015 Johnson Controls, Inc.

VG1000 Series Two-Way, Stainless Steel Trim, NPT End Connections Ball Valves with Spring-Return Electric Actuators without Switches (Continued)

Two-Way — Spring Return Valves — Without Switches (Not Rated for Steam Service) (Part 2 of 2)

Fluid Temperatures: -22 to 212°F (-30 to 100°C) Not Rated for Steam Service				AC 24 V			AC 85–264 V (VA9203) AC 120 V (VA9208)
Valve	**Size, in.**	**Cv**	**Closeoff psig**	**Floating**	**DC 0 to 10 V Proportional**	**On/Off**	**On/Off**
				Spring Return Closed — Valve Normally Closed			
				VA9203-AGA-2Z	**VA9203-GGA-2Z**	**VA9203-BGA-2**	**VA9203-BUA-2**
VG1245AD	1/2	1.2	200	VG1245AD+943AGA	VG1245AD+943GGA	VG1245AD+943BGA	VG1245AD+943BUA
VG1245AE		1.9[1]		VG1245AE+943AGA	VG1245AE+943GGA	VG1245AE+943BGA	VG1245AE+943BUA
VG1245AF		2.9[1]		VG1245AF+943AGA	VG1245AF+943GGA	VG1245AF+943BGA	VG1245AF+943BUA
VG1245AG		4.7[1]		VG1245AG+943AGA	VG1245AG+943GGA	VG1245AG+943BGA	VG1245AG+943BUA
VG1245AL		7.4[1]		VG1245AL+943AGA	VG1245AL+943GGA	VG1245AL+943BGA	VG1245AL+943BUA
VG1245AN		11.7		VG1245AN+943AGA	VG1245AN+943GGA	VG1245AN+943BGA	VG1245AN+943BUA
VG1245BG	3/4	4.7[1]	200	VG1245BG+943AGA	VG1245BG+943GGA	VG1245BG+943BGA	VG1245BG+943BUA
VG1245BL		7.4[1]		VG1245BL+943AGA	VG1245BL+943GGA	VG1245BL+943BGA	VG1245BL+943BUA
VG1245BN		11.7		VG1245BN+943AGA	VG1245BN+943GGA	VG1245BN+943BGA	VG1245BN+943BUA
VG1245CL	1	7.4[1]	200	VG1245CL+943AGA	VG1245CL+943GGA	VG1245CL+943BGA	VG1245CL+943BUA
VG1245CN		11.7[1]		VG1245CN+943AGA	VG1245CN+943GGA	VG1245CN+943BGA	VG1245CN+943BUA
VG1245CP		18.7		VG1245CP+943AGA	VG1245CP+943GGA	VG1245CP+943BGA	VG1245CP+943BUA
				Spring Return Closed — Valve Normally Closed			
				VA9208-AGA-2	**VA9208-GGA-2**	**VA9208-BGA-3**	**VA9208-BAA-3**
VG1245DN	1-1/4	11.7[1]	200	VG1245DN+948AGA	VG1245DN+948GGA	VG1245DN+958BGA	VG1245DN+958BAA
VG1245DP		18.7[1]		VG1245DP+948AGA	VG1245DP+948GGA	VG1245DP+958BGA	VG1245DP+958BAA
VG1245DR		29.2		VG1245DR+948AGA	VG1245DR+948GGA	VG1245DR+958BGA	VG1245DR+958BAA
VG1245EP	1-1/2	18.7[1]	200	VG1245EP+948AGA	VG1245EP+948GGA	VG1245EP+958BGA	VG1245EP+958BAA
VG1245ER		29.2[1]		VG1245ER+948AGA	VG1245ER+948GGA	VG1245ER+958BGA	VG1245ER+958BAA
VG1245ES		46.8		VG1245ES+948AGA	VG1245ES+948GGA	VG1245ES+958BGA	VG1245ES+958BAA
VG1245FR	2	29.2[1]	200	VG1245FR+948AGA	VG1245FR+948GGA	VG1245FR+958BGA	VG1245FR+958BAA
VG1245FS		46.8[1]		VG1245FS+948AGA	VG1245FS+948GGA	VG1245FS+958BGA	VG1245FS+958BAA
VG1245FT		73.7		VG1245FT+948AGA	VG1245FT+948GGA	VG1245FT+958BGA	VG1245FT+958BAA

1. Valve has a characterizing disk.

Valve Assemblies with M9000-561 Thermal Barrier Installed — Rated for High-Temperature Fluid Service Two-Way — Spring Return Valve Open — Normally Open — Without End Switches (Part 1 of 2)

Fluid Temperatures: -22 to 284°F (-30 to 140°C) Water and 15 psi Steam				AC 24 V			AC 85–264 V (VA9203) AC 120 V (VA9208)
Valve	**Size, in.**	**Cv**	**Closeoff psig**	**Floating**	**DC 0 to 10 V Proportional**	**On/Off**	**On/Off**
				Spring Return Open — Valve Normally Open			
				VA9203-AGA-2Z	**VA9203-GGA-2Z**	**VA9203-BGA-2**	**VA9203-BUA-2**
VG1245AD	1/2	1.2[1]	200	VG1245ADH923AGA	VG1245ADH923GGA	VG1245ADH923BGA	VG1245ADH923BUA
VG1245AE		1.9[1]		VG1245AEH923AGA	VG1245AEH923GGA	VG1245AEH923BGA	VG1245AEH923BUA
VG1245AF		2.9[1]		VG1245AFH923AGA	VG1245AFH923GGA	VG1245AFH923BGA	VG1245AFH923BUA
VG1245AG		4.7[1]		VG1245AGH923AGA	VG1245AGH923GGA	VG1245AGH923BGA	VG1245AGH923BUA
VG1245AL		7.4[1]		VG1245ALH923AGA	VG1245ALH923GGA	VG1245ALH923BGA	VG1245ALH923BUA
VG1245AN		11.7		VG1245ANH923AGA	VG1245ANH923GGA	VG1245ANH923BGA	VG1245ANH923BUA
VG1245BG	3/4	4.7[1]	200	VG1245BGH923AGA	VG1245BGH923GGA	VG1245BGH923BGA	VG1245BGH923BUA
VG1245BL		7.4[1]		VG1245BLH923AGA	VG1245BLH923GGA	VG1245BLH923BGA	VG1245BLH923BUA
VG1245BN		11.7		VG1245BNH923AGA	VG1245BNH923GGA	VG1245BNH923BGA	VG1245BNH923BUA
VG1245CL	1	7.4[1]	200	VG1245CLH923AGA	VG1245CLH923GGA	VG1245CLH923BGA	VG1245CLH923BUA
VG1245CN		11.7[1]		VG1245CNH923AGA	VG1245CNH923GGA	VG1245CNH923BGA	VG1245CNH923BUA
VG1245CP		18.7		VG1245CPH923AGA	VG1245CPH923GGA	VG1245CPH923BGA	VG1245CPH923BUA

The performance specifications are nominal and conform to acceptable industry standards. For applications at conditions beyond these specifications, consult the local Johnson Controls office. Johnson Controls, Inc. shall not be liable for damages resulting from misapplication or misuse of its products. © 2015 Johnson Controls, Inc.

VG1000 Series Two-Way, Stainless Steel Trim, NPT End Connections Ball Valves with Spring-Return Electric Actuators without Switches (Continued)

Valve Assemblies with M9000-561 Thermal Barrier Installed — Rated for High-Temperature Fluid Service Two-Way — Spring Return Valve Open — Normally Open — Without End Switches (Part 2 of 2)

Fluid Temperatures: -22 to 284°F (-30 to 140°C) Water and 15 psi Steam				AC 24 V			AC 85–264 V (VA9203) AC 120 V (VA9208)
Valve	**Size, in.**	**Cv**	**Closeoff psig**	**Floating**	**DC 0 to 10 V Proportional**	**On/Off**	**On/Off**
				Spring Return Open — Valve Normally Open			
				VA9208-AGA-2	**VA9208-GGA-2**	**VA9208-BGA-3**	**VA9208-BAA-3**
VG1245DN	1-1/4	11.7[1]	200	VG1245DNH928AGA	VG1245DNH928GGA	VG1245DNH938BGA	VG1245DNH938BAA
VG1245DP		18.7[1]		VG1245DPH928AGA	VG1245DPH928GGA	VG1245DPH938BGA	VG1245DPH938BAA
VG1245DR		29.2		VG1245DRH928AGA	VG1245DRH928GGA	VG1245DRH938BGA	VG1245DRH938BAA
VG1245EP	1-1/2	18.7[1]	200	VG1245EPH928AGA	VG1245EPH928GGA	VG1245EPH938BGA	VG1245EPH938BAA
VG1245ER		29.2[1]		VG1245ERH928AGA	VG1245ERH928GGA	VG1245ERH938BGA	VG1245ERH938BAA
VG1245ES		46.8		VG1245ESH928AGA	VG1245ESH928GGA	VG1245ESH938BGA	VG1245ESH938BAA
VG1245FR	2	29.2[1]	200	VG1245FRH928AGA	VG1245FRH928GGA	VG1245FRH938BGA	VG1245FRH938BAA
VG1245FS		46.8[1]		VG1245FSH928AGA	VG1245FSH928GGA	VG1245FSH938BGA	VG1245FSH938BAA
VG1245FT		73.7		VG1245FTH928AGA	VG1245FTH928GGA	VG1245FTH938BGA	VG1245FTH938BAA
				Spring Return Closed — Valve Normally Closed			
				VA9203-AGA-2Z	**VA9203-GGA-2Z**	**VA9203-BGA-2**	**VA9203-BUA-2**
VG1245AD	1/2	1.2	200	VG1245ADH943AGA	VG1245ADH943GGA	VG1245ADH943BGA	VG1245ADH943BUA
VG1245AE		1.9[1]		VG1245AEH943AGA	VG1245AEH943GGA	VG1245AEH943BGA	VG1245AEH943BUA
VG1245AF		2.9[1]		VG1245AFH943AGA	VG1245AFH943GGA	VG1245AFH943BGA	VG1245AFH943BUA
VG1245AG		4.7[1]		VG1245AGH943AGA	VG1245AGH943GGA	VG1245AGH943BGA	VG1245AGH943BUA
VG1245AL		7.4[1]		VG1245ALH943AGA	VG1245ALH943GGA	VG1245ALH943BGA	VG1245ALH943BUA
VG1245AN		11.7		VG1245ANH943AGA	VG1245ANH943GGA	VG1245ANH943BGA	VG1245ANH943BUA
VG1245BG	3/4	4.7[1]	200	VG1245BGH943AGA	VG1245BGH943GGA	VG1245BGH943BGA	VG1245BGH943BUA
VG1245BL		7.4[1]		VG1245BLH943AGA	VG1245BLH943GGA	VG1245BLH943BGA	VG1245BLH943BUA
VG1245BN		11.7		VG1245BNH943AGA	VG1245BNH943GGA	VG1245BNH943BGA	VG1245BNH943BUA
VG1245CL	1	7.4[1]	200	VG1245CLH943AGA	VG1245CLH943GGA	VG1245CLH943BGA	VG1245CLH943BUA
VG1245CN		11.7[1]		VG1245CNH943AGA	VG1245CNH943GGA	VG1245CNH943BGA	VG1245CNH943BUA
VG1245CP		18.7		VG1245CPH943AGA	VG1245CPH943GGA	VG1245CPH943BGA	VG1245CPH943BUA
				Spring Return Closed — Valve Normally Closed			
				VA9208-AGA-2	**VA9208-GGA-2**	**VA9208-BGA-3**	**VA9208-BAA-3**
VG1245DN	1-1/4	11.7[1]	200	VG1245DNH948AGA	VG1245DNH948GGA	VG1245DNH958BGA	VG1245DNH958BAA
VG1245DP		18.7[1]		VG1245DPH948AGA	VG1245DPH948GGA	VG1245DPH958BGA	VG1245DPH958BAA
VG1245DR		29.2		VG1245DRH948AGA	VG1245DRH948GGA	VG1245DRH958BGA	VG1245DRH958BAA
VG1245EP	1-1/2	18.7[1]	200	VG1245EPH948AGA	VG1245EPH948GGA	VG1245EPH958BGA	VG1245EPH958BAA
VG1245ER		29.2[1]		VG1245ERH948AGA	VG1245ERH948GGA	VG1245ERH958BGA	VG1245ERH958BAA
VG1245ES		46.8		VG1245ESH948AGA	VG1245ESH948GGA	VG1245ESH958BGA	VG1245ESH958BAA
VG1245FR	2	29.2[1]	200	VG1245FRH948AGA	VG1245FRH948GGA	VG1245FRH958BGA	VG1245FRH958BAA
VG1245FS		46.8[1]		VG1245FSH948AGA	VG1245FSH948GGA	VG1245FSH958BGA	VG1245FSH958BAA
VG1245FT		73.7		VG1245FTH948AGA	VG1245FTH948GGA	VG1245FTH958BGA	VG1245FTH958BAA

1. Valve has a characterizing disk.

The performance specifications are nominal and conform to acceptable industry standards. For applications at conditions beyond these specifications, consult the local Johnson Controls office. Johnson Controls, Inc. shall not be liable for damages resulting from misapplication or misuse of its products. © 2015 Johnson Controls, Inc.

VG1000 Series Two-Way, Stainless Steel Trim, NPT End Connections Ball Valves with Spring-Return Electric Actuators without Switches (Continued)

Technical Specifications

VG1000 Series Two-Way, Stainless Steel Trim, NPT End Connections Ball Valves with Spring-Return Electric Actuators without Switches		
Service[1]		Hot Water, Chilled Water, 50/50 Glycol Solutions, and 15 psig (103 kPa) Saturated Steam for HVAC Systems
Fluid Temperature Limits	**Water**	-22 to 284°F (-30 to 140°C)
	Steam	15 psig (103 kPa) at 250°F (121°C)
Maximum Actuator Fluid Temperature Limit	**212°F (100°C)**	VA9203 Series VA9208 Series
	284°F (140°C)	VA9203 Series with M9000-561 Thermal Barrier VA9208 Series with M9000-561 Thermal Barrier
Valve Body Pressure Rating	**Water**	580 psig (4,000 kPa) at 203°F (95°C) (PN40) 464 psig (3,196 kPa) at 284°F (140°C) (PN40)
	Steam	15 psig (103 kPa) Saturated Steam (Applies to VA9203 Series or VA9208 Series Actuators with M9000-561 Thermal Barrier Installed)
Maximum Closeoff Pressure		200 psid (1,378 kPa)
Maximum Recommended Operating Pressure Drop		50 psid (340 kPa)
Flow Characteristics	**Two-Way**	Equal Percentage
Rangeability[2]		Greater than 500:1
Minimum Ambient Operating Temperature	**-22°F (-30°C)**	VA9203 Series Spring-Return Actuators
	-40°F (-40°C)	VA9208 Series Spring-Return Actuators
Maximum Ambient Operating Temperature[3] **(Limited by the Actuator and Linkage)**	**Direct Mount**	140°F (60°C): VA9203 or VA9208 Series Spring-Return Actuators
Leakage		0.01% of Maximum Flow per ANSI/FCI 70-2, Class 4
		1% of Maximum Flow for Three-Way Bypass Port
End Connections		National Pipe Thread (NPT)
Materials	**Body**	Forged Brass
	Ball	300 Series Stainless Steel
	Blowout-Proof Stem	300 Series Stainless Steel
	Seats	Graphite-Reinforced PTFE with Ethylene Propylene Diene Monomer (EPDM) O-Ring Backing
	Stem Seals	EPDM Double O-Rings
	Characterizing Disk	Amodel® AS-1145HS Polyphthalamide Resin
Compliance CRN		0C16910.5C

1. Proper water treatment is recommended; refer to the VDI 2035 Guideline.
2. Rangeability is defined as the ratio of maximum controllable flow to minimum controllable flow.
3. In steam applications, install the valve with the stem horizontal to the piping and wrap the valve and piping with insulation.

The performance specifications are nominal and conform to acceptable industry standards. For applications at conditions beyond these specifications, consult the local Johnson Controls office. Johnson Controls, Inc. shall not be liable for damages resulting from misapplication or misuse of its products. © 2015 Johnson Controls, Inc.

REVIEWED BY CONTRACTOR

Kudlik Construction Ltd.

NAME: Sandra Rousseau P.Eng

DATE: Mai 15, 2019

Mécanique Nordique
Plumbing
Heating
Ventillation
mecanique.nordique@hotmail.com

1255 Rue J.A.Bombardier
Lévis, Québec
G7A 2P4
Téléphone: 418-496-1109
Télécopieur: 418-496-3803

IQALUIT WWTP UPGRADE

DRAWING FOR APPROVAL

Ingineer : NUNAMI STANTEC

DRAWING #: AD-041

Section	:	25 30 02
Article	:	2.14
Plans	:	All
Application	:	Controls OIL Valves
Brand	:	Johnson Controls
Model	:	
Revised #	:	
Supplyer	:	Johnson Controls

Pages incl.		14
Date	:	**2019-05-15**
By	:	**Mécanique Nordique Inc.**

Johnson Controls Ltd.
1375 Rue Frank-Carrel
Ville de Québec, QC G1N 2E7
Tel. 418-681-7958

TRANSMITTAL LETTER

TO:	Mecanique Nordique	Date:	May 15, 2019
	9257-6131 Quebec Inc.	Project Name:	Iqualuit Waste Water Treatment Plant Upgrade
	1255 Rue J.A. Bombardier	Project #:	8N0Y-0079
	Levis, QC G7A 2P4	Customer PO#:	

We are sending you: ☒ **Enclosed/Attached** ☐ **Under Separate Cover**

☐ Shop Drawings	☒ Product Data Sheets	☐ Copy of Letter
☐ Plans	☐ Copy of Letter	☒ Submittals
☐ Specifications	☐ Samples	☐ Operations & Maint. Manuals
☐ Damper Schedules	☐ Room Schedules	☐ Device Schedules
☒ Valve Schedules	☐ Door Schedules	☐

This material/information is being sent:

☐ Per your Request.	☐ For your Record and File	☐ For Correction & Resubmittal.
☒ For your Review and Approval.	☐ Approved as Submitted.	☐ For issue to Subcontractors.
☐ For your Review and Comment.	☐ Approved as Noted.	☐ Final Distributions
☐	☐	☐

We have detailed these Submittals based on our interpretation of the contract drawings & specifications

☒ Return 1 Approved Copy
☐ Fabrication Held for Approval & Written Release
☐ Equipment is being fabricated and any changes may create a delay in shipment and a possible increase in price.

Please have your detailing department look carefully at the attached submittals. We cannot be held responsible for any cost or lead time changes incurred for modifications once the equipment has been released for fabrication.

Item	Description / Comments	Document # / Ref	Rev	# of Sets
1	Iqualuit Waste Water Treatment Plant Upgrade: HW Submittal	8N0Y-0079	01	01
2	Iqualuit Waste Water Treatment Plant Upgrade: Re-Submittal	8N0Y-0079	02	01
3	Iqualuit Waste Water Treatment Plant Upgrade: Re-Submittal	8N0Y-0079	03	01
4				
5				
6				

Message/Comments:

Delivered by: Date: 5/15/2019

Received by: Date: 5/15/2019

CC to:	# of Copies

TRANSMITTED BY:
Philippe Cernosek
Project Manager

Date: May 15, 2018

BUILDING AUTOMATION SYSTEM

RE-SUBMITTAL

IQUALUIT WASTE WATER TREATMENT PLANT UPGRADE

Submitted To:
Mecanique Nordique
9257-6131 Quebec Inc.
1255 Rue J.A. Bombardier
Levis, QC G7A 2P4

Submitted By:
Philippe Cernosek
Project Manager

JCI Contract: 8N0Y-0079

Johnson Controls Ltd.
1375 Rue Frank-Carrel
Ville de Québec, QC G1N 2E7
Tel: 418-681-7958
Fax:

STAMPS

Project Name: Iqualuit Waste Water Treatment Plant Upgrades
Project Number: 8N0Y-0079

Valve Schedule

Tag						Valve Information															Actuator Information		
Item	System	Service	Qty.	JCI DWG	Ref. Dwg.	Code Number	Valve Family	Configuration	Fail Position	Inlet Pipe Size (in)	Valve Size (in)	Medium	Flow (gpm or lbs/hr)	Design Delta P (psi)	Valve Delta P (psi)	Design Coefficient (Cv)	Valve Coefficient (Cv)	Valve Close Off (psi)	Trim Material	Connection	Code Number	Actuator Control	Comments
15	FUEL OIL	TK4.1V-C	1	005.001	M604	7321GBN59N00	Ball Valve	2-Way	Valve Closed	2	2	Oil					38.6		Stainless Steel	Threaded		120VAC On/Off	
16	FUEL OIL	TK4.2V-C	1	005.001	M604	7321BBN64N00	Ball Valve	2-Way	Valve Closed	1	1	Oil					13.5		Stainless Steel	Threaded		120VAC On/Off	
17	FUEL OIL	TK4.3V-C	1	005.001	M604	7321BBN64N00	Ball Valve	2-Way	Valve Closed	1	1	Oil					13.5		Stainless Steel	Threaded		120VAC On/Off	

STANTEC PROJECT #: 110126045

SUBMITTAL # AD-041 (FO Valves)

This review by Stantec is for general conformance with the design concept of Stantec's design of the:

- ☐ Architectural
- ☐ Structural
- ☑ Mechanical
- ☐ Electrical
- ☐ Other

component(s) only and does not mean that Stantec has verified or approves the shop drawing(s). The Contractor remains solely responsible for the shop drawing(s) and this review by Stantec does not relieve the Contractor of the Contractor's responsibility for errors or omissions in the shop drawing(s) or for meeting all requirements of the contract documents. This review does not mean that Stantec approves the detailed design inherent in the shop drawing, responsibility for which shall remain with the Contractor submitting same, nor does this review mean that Stantec accepts any deviation of the shop drawing(s) from the contract documents. The Contractor is responsible for confirming all dimensions and correlating them at the job site, for all construction means, methods and techniques, and for coordination of construction work of all trades, including coordination of all shop drawings.

Stantec

- ☑ REVIEWED
- ☐ REVIEWED, AS NOTED
- ☐ REVISE AND RESUBMIT
- ☐ NOT REVIEWED

DATE 2019-05-22

BY Brendan Zrum, P.Eng





aerospace
climate control
electromechanical
filtration
fluid & gas handling
hydraulics
pneumatics
process control
sealing & shielding





General Purpose Solenoid Valves

Skinner™ and Gold Ring™ Valves



Effective September 2011

Parker

ENGINEERING YOUR SUCCESS.

2-Way

Direct Lift, Pilot & Remote Operated Valves
1/4"–2" NPT



General Description:

2-Way Direct Lift, Pilot & Remote Operated valves are designed for higher flow and medium to high pressure applications. Pilot operated valves require the minimum pressure differential specified for proper valve operation.

Installation
Valves should be mounted with solenoid coil vertical and upright.

Standard Materials of Construction
Please refer to page A55

Compatible Fluids
Lubricated Air, Inert Gases, Water and Light Oil (300 SSU). Additional fluids compatible with alternate materials of construction (consult factory).

Use of non-lubricated gaseous media can affect valve life.



Electrical Characteristics:

Standard Voltages:
AC –24/60
120/60–110/50
240/60–220/50
DC –12, 24 & 120
For other voltages – consult factory

Coil Classification:
Class F standard
Class H available

Agency Approvals:
Standard valves with NEMA 4X or explosion proof solenoid enclosures are UL Listed and CSA Certified. For additional details, consult factory.

Maximum Ambient Temperature
150°F
Please refer to page A55 for details.

Applications:

- Irrigation systems
- Fire suppression equipment
- Molding equipment
- Cooling of machine tools
- Sterilizers
- Car wash
- Water treatment and purification
- Air compressors and dryers
- Floor cleaning equipment
- Hospital equipment
- Automated systems
- Food processing

Parker Hannifin Corporation
Fluid Control Division
1 800 825 8305 (1 800 Valve05)
www.parker.com/fcd

2-Way Internal Pilot Operated - Normally Closed - Brass

Port Size NPT	Orifice Size in.	Flow Factor Cv	Operating Pressure Differential (MOPD) PSI				Watt	Max. Media Temp. °F	Seal	Pressure Vessel Number	Reference	
			Min.	Air, Inert Gas	Water	Light Oil					Coil	Valve
AC TECHNICAL SPECIFICATIONS												
1/4	1/4	0.76	5	300	300	300	10	185	NBR	73212BN2MN00	7	A35
1/4	11/32	1.20	5	300	300	300	6	180	NBR	04F25C2122CAF	1	A54
1/4	7/16	2.00	3	150	150	150	10	185	NBR	7321KBN2RN00	7	A46
3/8	11/32	1.20	5	300	300	300	6	180	NBR	06F25C2122CAF	1	A54
3/8	1/2	2.40	5	300	300	300	10	185	NBR	73212BN3SN00	7	A32
3/8	7/16	2.50	3	150	150	150	10	185	NBR	7321KBN3SN00	7	A46
3/8	5/8	3.00	5	300	300	300	16	175	NBR	06F22C2140ADF	5	A22
3/8	1/2	3.00	1	300	235	235	11	180	NBR	06F25C2132ACF	4	A21
3/8	5/8	3.00	5	200	135	135	6	180	NBR	06F22C2140AAF	1	A23
3/8	5/8	3.00	5	150	150	150	10	185	NBR	73218BN3TN00	7	A43
3/8	5/8	3.00	0	150	150	150	11	180	NBR	06F23C2140ACF*	4	A22
3/8	5/8	3.00	0	100	100	100	10	185	NBR	72218BN3TN00*	7	A36
3/8	19/32	4.40	0	230	230	230	10	185	NBR	7221GBN3VN00*	7	A47
1/2	7/16	2.50	3	150	150	150	10	185	NBR	7321KBN4SN00	7	A46
1/2	1/2	2.80	5	300	300	300	10	185	NBR	73212BN4TN00	7	A32
1/2	1/2	3.60	1	300	235	235	11	180	NBR	08F25C2132ACF	4	A21
1/2	5/8	4.00	5	300	300	300	16	175	NBR	08F22C2140ADF	5	A22
1/2	5/8	4.00	5	250	220	220	11	180	NBR	08F22C2140ACF	4	A22
1/2	5/8	4.00	5	200	135	135	6	180	NBR	08F22C2140AAF	1	A23
1/2	5/8	4.00	5	150	150	150	10	185	NBR	73218BN4UN00	7	A43
1/2	5/8	4.00	0	150	150	150	11	180	NBR	08F23C2140ACF*	4	A22
1/2	5/8	4.00	0	100	100	100	10	185	NBR	72218BN4UN00*	7	A36
1/2	19/32	4.40	0	230	230	230	10	185	NBR	7221GBN4VN00*	7	A47
3/4	3/4	5.00	5	150	150	150	10	185	NBR	73218BN5VN00	7	A43
3/4	3/4	5.00	0	150	150	150	11	180	NBR	12F23C2148ACF*	4	A25
3/4	3/4	5.00	5	125	125	125	6	180	NBR	12F22C2148AAF	1	A24
3/4	3/4	5.00	0	100	100	100	10	185	NBR	72218BN5VN00*	7	A36
3/4	19/32	5.50	0	230	230	230	10	185	NBR	7221GBN51N00*	7	A47
3/4	3/4	6.50	5	250	150	250	6	180	NBR	12F24C2148AAF	1	A27
3/4	3/4	7.30	5	300	300	300	10	185	NBR	73212BN52N00	7	A33
3/4	3/4	7.40	1	300	235	235	11	180	NBR	12F25C2148ACF	4	A28
3/4	25/32	9.60	5	230	230	230	10	185	NBR	7321GBN53N00	7	A48

***Direct Lift Valves (0 minimum pressure differential) will open at zero differential pressure, however, full flow through the valve will be achieved at approximately 5 psi differential.**

Parker Hannifin Corporation
Fluid Control Division
1 800 825 8305 (1 800 Valve05)
www.parker.com/fcd

2-Way Internal Pilot Operated - Normally Closed - Brass (Continued)

Port Size NPT	Orifice Size in.	Flow Factor Cv	Operating Pressure Differential (MOPD) PSI				Watt	Max. Media Temp. °F	Seal	Pressure Vessel Number	Reference	
			Min.	Air, Inert Gas	Water	Light Oil					Coil	Valve
AC TECHNICAL SPECIFICATIONS												
1	19/32	5.50	0	230	230	230	10	185	NBR	7221GBN61N00*	7	A47
1	1	11.0	5	300	300	300	10	185	NBR	73212BN63N00	7	A33
1	1	11.7	0	230	230	230	10	185	NBR	7221GBN64N00*	7	A47
1	1	12.2	1	300	300	-	11	180	NBR	16F25C2164ACF	4	A30
1	1	12.5	5	230	230	230	10	185	NBR	7321GBN64N00	7	A48
1	1	13.0	5	150	150	100	6	180	NBR	16F24C2164AAF	1	A29
1	1 1/16	13.5	5	125	125	125	10	185	NBR	73218BN64N00	7	A44
1 1/4	1 1/8	15.0	5	150	150	100	6	180	NBR	20F24C2172AAF	1	A29
1 1/4	1 1/8	15.0	5	125	125	125	10	185	NBR	73218BN75N00	7	A44
1 1/4	1 1/8	19.3	5	230	230	230	10	185	NBR	7321GBN76N00	7	A48
1 1/4	1 9/16	29.0	5	230	230	230	10	185	NBR	7321GBN88N00	7	A48
1 1/2	1 1/4	22.5	5	150	150	100	6	180	NBR	24F24C2180AAF	1	A31
1 1/2	1 1/4	22.5	5	125	125	125	10	185	NBR	73218BN87N00	7	A42
2	1 9/16	38.6	5	230	230	230	10	185	NBR	7321GBN99N00	7	A48

***Direct Lift Valves (0 minimum pressure differential) will open at zero differential pressure, however, full flow through the valve will be achieved at approximately 5 psi differential.**

Chemical Compatibility Database

Common Unit Converters

Masterflex Tubing & Chemical Compatibility

Masterflex Tubing & Food Compatibility

Masterflex Pump Head Roller Material Compatibility

Safety Glove Chemical Compatibility Database

NEED HELP ?

Our specialists are available to advise you about the best products.

800-363-5900

EMAIL US



Begin Compatibility Search with a Chemical or Material:

CHEMICAL COMPATIBILITY | MATERIAL COMPATIBILITY

Use dropdowns below to select a chemical, and then a combination material.

1. CHEMICAL: Oils: Fuel (1, 2, 3, 5A, 5B, 6)

2. MATERIAL: Buna N (Nitrile)

VIEW COMPATIBILITY | Clear Search

CHEMICAL SELECTED : Oils: Fuel (1, 2, 3, 5A, 5B, 6)

SHARE | PRINT

MATERIAL	COMPATIBILITY
Buna N (Nitrile)	B - Good

Ratings - Chemical Effect

A - Excellent

B - Good: Minor Effect, slight corrosion, or discoloration.

C - Fair: Moderate Effect, not recommended for continuous use. Softening or loss of strength, and swelling may occur.

D - Severe Effect: Not recommended for any use.

E - Information not available.

Explanation of Footnotes

1-Satisfactory to 72oF (22oC)

2-Satisfactory to 120oF (48oC)



Technical Information

Introduction

Solenoid valves are highly engineered products that can be utilized in many diverse and unique applications. In addition to operational functionality, it is important to consider safety, reliability, media compatibility and suitability for the operating environment when selecting the best product for a given application. This section provides a brief overview of the components and functional varieties of solenoid valves available from Parker.

General Information

Operation

Solenoid valves are electrically operated devices used to control flow. They are used for the remote on/off or directional control of liquids, gases and steam. They do not regulate flow.

Solenoid valves consist of two main elements: ***1.)*** An electrical coil in the solenoid, and ***2.)*** A valve body or pressure vessel. The solenoid is the electromagnetic unit that powers (acts to open or close) the valve. The valve is the pressure containing unit that acts to shut off or open media flow.

When the solenoid is energized by an electrical signal, current flow results in the build up of a magnetic field. The field attracts a moveable plunger in the valve. Physical movement of the plunger opens or closes a valve orifice which gives the valve on/off or directional control of media.

In general, solenoid valves are constructed to be: ***1.)*** Normally-Open, or ***2.)*** Normally-Closed. Both designations refer to action of the valve on flow when the solenoid is not energized. There would be, for example, no media flow through a normally closed valve until the solenoid is energized.

The most common types of solenoid actuated valves are: ***1.)*** Direct-Acting, and ***2.)*** Pilot-Operated. In a direct-acting valve, the plunger is in direct contact with the body main orifice, and opens or closes the orifice. In a pilot-operated valve, the main orifice is not directly controlled by the plunger, but by a diaphragm, piston or spool. Pilot operated valves contain both a pilot and a bleed orifice.

Operational Specifications

All solenoid valves are individually rated. Pilot-operated solenoid valves may also have an additional specification, ***Minimum Operating Pressure Differential (MOP***). This is the minimum system pressure differential required to operate the valve and maintain it in the open position. MOP applies only to pilot-operated solenoid valves where system pressure is used to lift the diaphragm off the seat (normally-closed) when the solenoid is energized. Direct-acting or hung-diaphragm valves do not require a minimum operating pressure.

There will be a pressure differential ΔP before the solenoid of a normally-closed valve is energized. Just after flow begins moving through the valve, the pressure differential may decrease. When sizing any normally-closed, normally-open, or universal solenoid valve, pressure differential before and after flow begins must be considered.

Solenoid valves are also rated for ***Maximum Fluid (media) Temperature*** due to temperature limitations of the various disc or diaphragm materials used in their construction.

Response Time, the time necessary for a fully open valve to fully close, or the time necessary for a fully closed valve to fully open, is affected by several factors including: electrical service, media, valve size, system pressure, pressure drop, and operating mode.

The following general response times (nominal) apply for air service using alternating current (AC).

- **Large direct-acting valves (3/8 to 3/4-inch) 20 to 40 milliseconds**
- **Small Direct Acting Valves (1/8 to 1/4-inch) 0.5 to 10 milliseconds**
- **Small pilot (diaphragm) valves (3/8 to 3/4-inch) 15 to 50 milliseconds**
- **Large pilot (diaphragm) valves (1 to 3-inch) 50 to 75 milliseconds**

Viscous liquids have very little effect on response time on small direct-acting valves. However, on all other valves, viscous liquids may increase response time by 50 to 100 percent. DC operated solenoid valves will generally increase response time (relative to AC operated solenoids) by as much as 50 percent. Where response time is critical, consult your authorized local Fluid Control Division distributor.

Two-Way Solenoid Valve Operation

Two-way solenoid valves have one inlet and one outlet connection with one main orifice and flow path. A normally closed valve is closed when the solenoid is de-energized, open when the solenoid is energized. A normally open valve is open when the solenoid is de-energized, closed when the solenoid is energized. Consideration should be given to the desired fail-safe condition of the valve when selecting the type of operation.

Operational Sequence: Direct-Acting Normally Closed

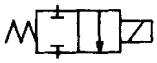

To Open: When the solenoid receives an electrical signal, a magnetic field is formed which attracts the plunger. The plunger lifts off the main orifice allowing flow through the valve.

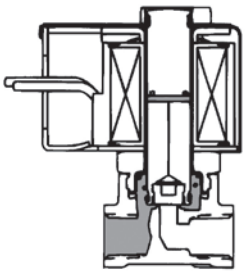

Normally Closed, De-Energized

To Close: When the solenoid is de-energized, it releases its hold on the plunger. The plunger drops and covers the main orifice.

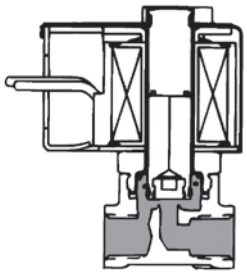

Normally Closed, Energized

Operational Sequence:
Direct-Acting Normally Open

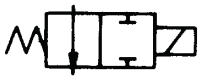

In a normally open valve, the sequence of operation is reversed from that of a normally closed valve. The main orifice is open when the solenoid is de-energized.

To Close: When the solenoid is energized, it attracts the plunger. The plunger covers the main orifice stopping media flow through the valve.

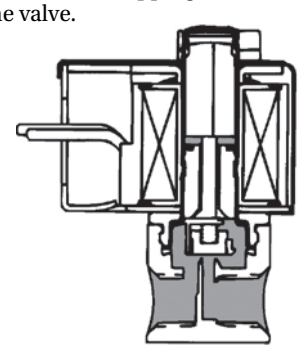

Normally Open, De-energized

To Open: When the solenoid is de-energized, it releases its hold on the plunger. The plunger uncovers the main orifice allowing flow through the valve.

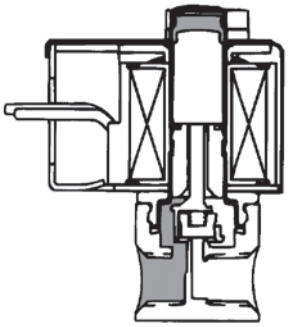

Normally Open, Energized

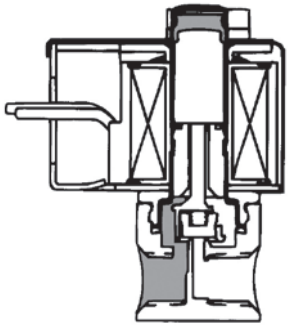

Normally Closed, Bi-Directional

Allows for flow in either direction when energized. (De-energized shown)

Operational Sequence:
Pilot-Operated Normally Closed

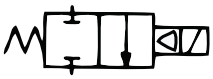

To Open: When the solenoid receives an electrical signal, a magnetic field is formed which attracts the plunger. The plunger covering the pilot orifice lifts off, causing system pressure (holding the diaphragm closed) to drop.

As system pressure on top of the diaphragm is reduced, full system pressure on the opposite side of the diaphragm acts to lift the diaphragm away from the main orifice, thus allowing full media flow through the valve. Since the bleed orifice is dimensionally smaller than the pilot orifice, system pressure cannot rebuild on top of the diaphragm as long as the pilot orifice remains open.

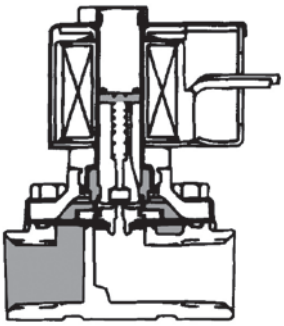

Normally Closed, De-Energized

To Close: When the solenoid is de-energized, it releases its hold on the plunger. The plunger drops and covers the main orifice. System pressure then builds up on top of the diaphragm through the bleed orifice, forcing the diaphragm down until it covers the main orifice and stops media flow through the valve.

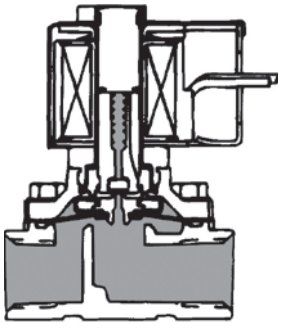

Normally Closed, Energized

Operational Sequence:
Pilot-Operated Normally Open

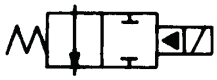

In a normally open valve, the sequence of operation is reversed from that of a normally closed valve. The main orifice is open when the solenoid is de-energized. All other relationships (e.g., the size relationship between the pilot and bleed orifice) still apply.

To Close: When the solenoid is energized, it attracts the plunger. The plunger covers the pilot orifice. System pressure then builds up on top of the diaphragm through the bleed orifice, forcing the diaphragm down until it covers the main orifice and stops media flow through the valve.

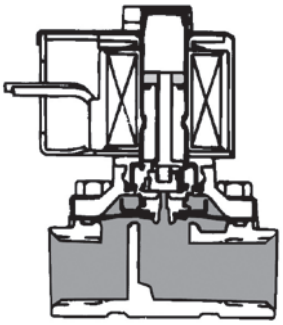

Normally Open, De-Energized

To Open: When the solenoid is de-energized, it releases its hold on the plunger. The plunger uncovers the pilot orifice causing system pressure holding the diaphragm closed to drop. As system pressure on top of the diaphragm is reduced, full system pressure on the opposite side of the diaphragm acts to lift the diaphragm away from the main orifice, thus allowing full media flow through the valve.

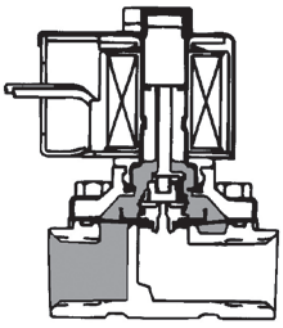

Normally Open, Energized

Parker Hannifin Corporation
Fluid Control Division
1 800 825 8305 (1 800 Valve05)
www.parker.com/fcd

Three-Way Solenoid Valve Operation

The difference between two-, three- and four-way solenoid valves lies in the construction of the valve body. Three-way valves have three connections and two main orifices. One orifice is always closed, the other always open. Which orifice is open, and which is closed, determines whether the valve is operationally normally open or normally closed.

Operational Sequence: Direct-Acting Normally Closed

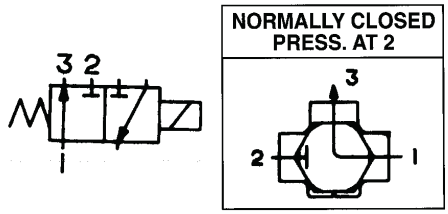

As with a normally closed, two-way valve, the system pressure orifice is closed when the solenoid is de-energized. The second orifice is open to whatever device it is connected to. When energized, the system pressure orifice is opened and the second orifice is closed. This allows system pressure to be applied to the device that was previously being exhausted through the second orifice (now closed).

Normally Open

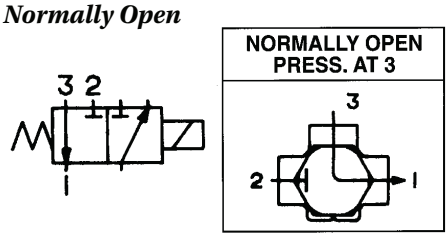

As with a normally open, two-way valve, the system pressure orifice is open when de-energized. The second orifice is closed to whatever device it is connected to. With the solenoid energized, the system pressure orifice is closed, the second orifice opened and the device exhausted.

Universal Construction

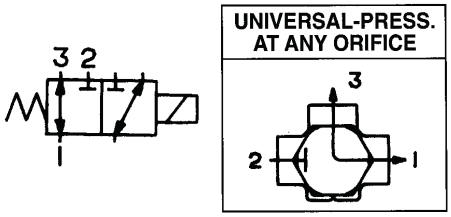

This type of three-way valve may be used in either the normally closed or normally open mode. It can be piped either way. The valve can be used to divert media flow from one outlet connection to the other, or to select one of two inlet flows.

Operational Sequence: Pilot-Operated Normally Closed

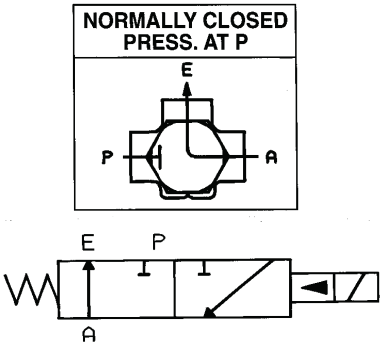

As with pilot-operated two-way valves, the plunger movement controls the pilot orifice which controls the pressure holding one of the diaphragms closed against the main orifice. As with direct-acting three-way valves, one orifice is closed when the other is open. When de-energized, flow is from the pressurized device to exhaust and the system pressure port is closed. When energized, flow is from the pressure port to the controlled device and the exhaust port is closed.

Normally Open

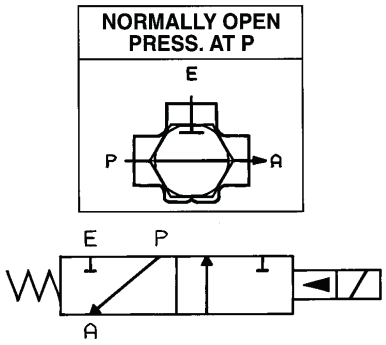

Four-Way Solenoid Valve Operation

A four-way valve is generally used to operate double-acting cylinders vs. a three-way for single acting cylinders.

A double-acting cylinder has a port at either end of the cylinder body by which fluid can enter and exit. This allows the piston to be moved (propelled) in either direction (double-acting). To distinguish the ports on a double-acting cylinder, one is usually marked "A" and the other "B". A four-way solenoid valve acts to change the direction of fluid flow from the "A" port to the "B" port and, therefore, change direction of the cylinder.

In addition to the "A" and "B" cylinder ports, the four-way valve has a pressure and exhaust port. When de-energized, the pressure port is internally connected to the "A" cylinder port, and the "B" cylinder port is internally connected to the valve's exhaust port. Energizing the four-way valve reverses the system, routing the "A" port to exhaust and the "B" port to pressure. A minimum pressure drop is required for proper operation. Care should be taken not to restrict the exhaust port. Speed controls should be installed in cylinder lines.

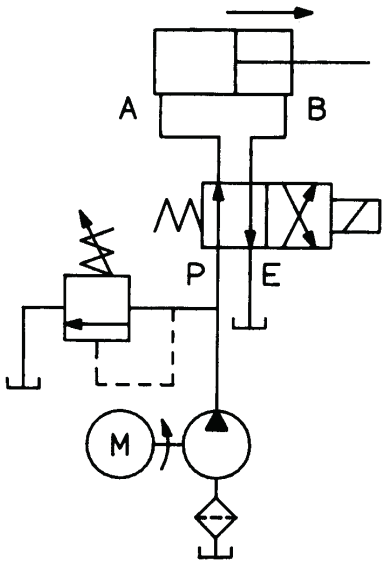

De-Energized

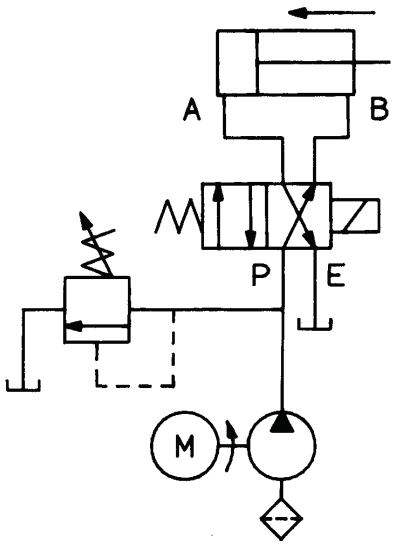

Energized

General Data-Solenoid Coils

Power and Voltage

All coils used in Parker FCD solenoid valves are designed for continuous duty except where noted. On AC, inrush current occurs at the moment the solenoid is energized. The continuous current after inrush is holding current.

Typical AC current values are shown in the Coil Section of the catalog. DC solenoids have no inrush. Typical amp ratings for DC are determined by dividing DC watts by DC voltage. All Parker FCD solenoid valves are tested to operate at 15% under-voltage and full pressure ratings. AC and DC voltage ratings (nominal) and normal operating ranges, as shown in the following table, are standard. For special voltages, consult the factory.

AC/DC Voltage Range

All coils used in Parker FCD valves are designed for continuous duty except where noted. They can remain energized continuously without damage from overheating or mechanical failure.

All coils used in Parker FCD solenoid valves are either Class "F" or Class "H" molded epoxy, and are constructed in accordance with UL, IEEE, NEMA and other accepted standards. unless otherwise noted

Testing

All Parker FCD solenoid valves are 100% tested. Coil insulation systems must satisfy performance standards set by the National Electrical Manufacturers Association (NEMA) and tested by Under-writer's Laboratories.

Electrical components of AC and DC coils are tested in accordance with ASTM D2307-78 and become a recognized component under U.L.1446.

The procedure produces data for an evaluation which concludes, a coil with 20,000 hours continuous operation will perform within the same specifications of a zero time coil (new coil).

Coil Construction

Parker FCD coils are epoxy encapsulated. This compound is waterproof and impervious to oil, dust, moisture and most corrosive fumes and vapors.

Coils used in Parker FCD valves are molded and constructed in accordance with UL, IEEE, NEMA and other accepted standards, and are 100% tested.

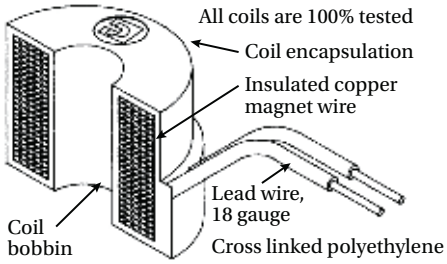

Temperature

Just as fluid (media) temperatures affect valve body trim; ambient, fluid and power input temperatures affect solenoid coils.

Temperature rise due to power input varies with coil design. Temperature rise due to power input and ambient temperature is directly additive and helps determine the class of coil required for specific valve applications.

When ambient temperature is greater than 25°C (77°F), add the difference of ambient and 25°C (77°F) to the energized coil temperature shown in the table.

The effect of higher fluid temperatures needs to be considered only when fluid temperature is greater than 180°F. Do not exceed the catalog maximum temperature limitation for the valve. Add the difference of your fluid temperature and 180°F to the energized coil temperature shown in the table.

Use the "Saturated Steam Temperature Table" when working with saturated steam. Do not exceed the catalog maximum temperature limitation for the valve. Add the difference of steam temperature and 180°F to the energized coil temperature shown in the table.

Total of additional ambient and fluid or steam temperature to the energized coil temperature shown must not exceed the industrial limit of the coil class selected. Class "H" coil is required if total temperature exceeds "F" Class coil limits. Consult your Fluid Control Division authorized distributor if total temperature exceeds the "H" Class coil limit.

Maximum allowable fluid temperatures are listed for all valves in each section of the catalog.

Minimum allowable fluid temperature is 32º F if moisture is present. Otherwise, -40º F for direct acting valves with NBR seals, -10º F with FKM seals and -10º F for 71214.

Consult factory for confirmation of low fluid temperature limit for specific complete, part number.

Industrial Limits	Total Coil Temperatures													
	AC								DC				AC/DC	
NEMA Limits	155°C (311°F)		180°C (356°F)		155°C (311°F)		180°C (356°F)		155°C (311°F)	180°C (356°F)	155°C (311°F)	180°C (356°F)	155°C (311°F)	180°C (356°F)
Class H														
Class F														
Temperature Margin for Higher Fluid or Ambient Temperature														135°C (243°F)
					115°C (239°F)				110°C (223°F)		106°C (223°F)		115°C (239°F)	
Energized Coil Temperatures in 25°C Ambient Temperatures	85°C (185°F)	90°C (194°F)	85°C (185°F)	90°C (194°F)										
Normal Room Temperature														
Nominal Watt Rating	6	11	6	11	10.2	16	10.2	16	9.5		11.5		10	10
Coil Class	F		H		F		H		F	H	F	H	F	H
Coil Chart	1 – 6												7	

Technical Reference

Parker Hannifin Corporation
Fluid Control Division
1 800 825 8305 (1 800 Valve05)
www.parker.com/fcd

REVIEWED BY CONTRACTOR

Kudlik Construction Ltd.

NAME: Sandra Rousseau P.Eng

DATE: Jul 03, 2018

NORCLAIR
MÉCANIQUE DE PROCÉDÉ

TDS AND SHOP DRAWINGS

DA-MP-15 - Firestop collar and sealant

Date : 2018-07-03

INFORMATION	
Project : **WASTEWATER PLANT - IQALUIT**	
Client : Kudlik Construction Ltd. To Sandra Rousseau P.Eng./ Project Manager	Project number : **2018-062**
Contractor : Norclair inc.	Project number Norclair : **P1039**
Address : 1100, Montee Masson, Laval, QC, Canada H7E 4P2	
Project Manager : Dominic Papineau	E-mail: dpapineau@norclair.ca
Phone: 450-688-4012 # 720	Cell.: 514-409-1832

Information, subcontractor or supplier	
Supplier : Hilti	
Contact :	Phone :

Information on the equipment or the proposed materials	
Speciality : Mechanical Process	
Equipment : Firestop collar and sealant	
Drawing reference :	
Specification reference : 40 05 23	Division :
Article :	Number Page : 3

CONSULTANT APPROVAL

STANTEC PROJECT #: 110126045

SUBMITTAL # DA-MP-015

This review by Stantec is for general conformance with the design concept of Stantec's design of the:

- ☐ Architectural
- ☐ Structural
- ☑ Mechanical
- ☐ Electrical
- ☐ Other

component(s) only and does not mean that Stantec has verified or approves the shop drawing(s). The Contractor remains solely responsible for the shop drawing(s) and this review by Stantec does not relieve the Contractor of the Contractor's responsibility for errors or omissions in the shop drawing(s) or for meeting all requirements of the contract documents. This review does not mean that Stantec approves the detailed design inherent in the shop drawing, responsibility for which shall remain with the Contractor submitting same, nor does this review mean that Stantec accepts any deviation of the shop drawing(s) from the contract documents. The Contractor is responsible for confirming all dimensions and correlating them at the job site, for all construction means, methods and techniques, and for coordination of construction work of all trades, including coordination of all shop drawings.

Stantec

- ☑ REVIEWED
- ☐ REVIEWED, AS NOTED
- ☐ REVISE AND RESUBMIT
- ☐ NOT REVIEWED

DATE 2018-07-10

BY Brendan Zrum, P.Eng

1100, Montée Masson
Laval, QC, Canada
H7E 4P2

Phone. : 450-688-4012
Fax : 450-661-6341
E-Mail : info@norclair.ca
www.norclair.ca

Firestop Collar (CP 643N)

Product description

- A ready-to-use firestop collar, made of a galvanized steel housing and intumescent inserts for firestopping combustible pipes

Product features

- Ready-to-use collar
- No construction required
- Fast installation time
- Adjustable mounting tabs
- Low profile for tight installations

Areas of application

- Firestopping combustible pipes up to 6" diameter in penetrations through fire walls and floors
- Suitable for the following pipe materials:
- PVC, CPVC, ABS, PVDF, PP and FRPP

For use with

- Concrete, masonry, wood floor and gypsum wall assemblies
- Wall and floor assemblies rated up to 4 hours

Types of installation

- Wall: two collars, one on each side
- Floor: one collar on underside (bottom)

Example

- Waste water pipes
- Fresh water pipes

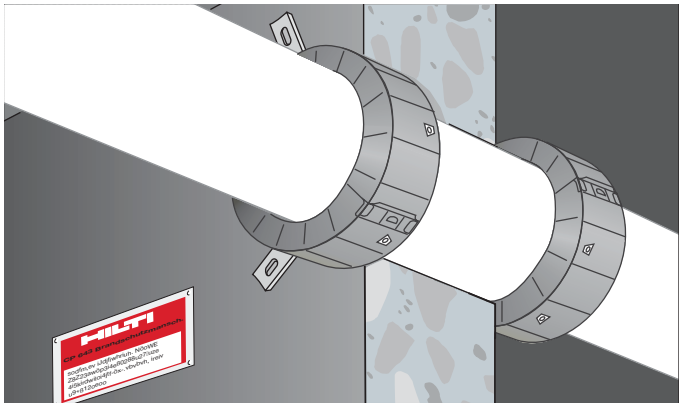

Technical Data	CP 643N			
Description	Pipe outside dia (in.)	Collar outside dia. (in.)	Collar Height (in.)	No. of hooks and fasteners
CP 643-50/1.5"N	1.4–2.0	2.8	0.9	2
CP 643-63/2"N	2.0–2.5	3.4	1.3	2
CP 643-90/3"N	2.6–3.6	4.9	1.7	3
CP 643-110/4"N	3.6–4.5	6.0	1.9	3
CP 643-160/6"N	6.6	9.8	1.9	4
Temperature resistance		-40°F to 140°F (–40°C to 60°C)		
Intumescent activation		Approx. 392°F (200°C)		
Expansion ratio (unrestricted)		Up to 1:10		
Tested in accordance with • UL 1479 • ASTM E 814 • ASTM G21 • CAN/ULC-S115				

CLASSIFIED c UL us
FIRESTOP DEVICE
FOR USE IN THROUGH-PENETRATION FIRESTOP SYSTEMS
SEE UL FIRE RESISTANCE DIRECTORY 5N76

FM APPROVED

FBC SYSTEM COMPATIBLE
Visit fbcsystemcompatible.com.
FBC™ is a trademark of the Lubrizol Corporation.

Installation instructions for CP 643N

Notice

- Before handling, read Material Safety Data Sheet and product label for safe usage and health information.
- Instructions below are general guidelines — always refer to the applicable drawing in the UL Fire Resistance Directory or Hilti Firestop Systems Guide for complete installation information

Opening

1. Clean the plastic pipes. Expansion of the intumescent material during a fire acts to close the plastic pipe. Very dirty pipes (ie: with remains of mortar) may lead to a delay in this closing action. Soiled plastic pipes should, therefore, be cleaned in the area where the CP 643N Firestop Collar is to be installed.

Application of firestop system

2. Seal the opening if required. Gaps may be closed with FS-ONE. The approved methods vary and are given in the specific UL system.
3. Close the CP 643N Firestop Collar. Place the CP 643N Firestop Collar around the plastic pipe and lock the closure by applying firm pressure until it latches.
4. Attach fastening hooks. The fastening hooks can be attached to various points on the metal housing. This allows the fastening points to be made to suit the space available in each case. The hooks must be positioned as symmetrically as possible. The required number of fastening hooks is indicated on the packaging.
5. Fastening the CP 643N Firestop Collar. Only when fastened properly can CP 643N offer protection against fire.

a. Mark the fastening points.
b. Drill holes with a Hilti rotary hammer drill (i.e. TE 4-A18) or, depending on base material, fasten using Hilti powder-actuated tool.
c. To secure the CP 643N Firestop Collar, use Hilti anchors/fasteners.
d. For maintenance reasons, a penetration can be permanently marked with an identification plate and fastened in a visible position next to the seal.

Not for use

- With metal pipes
- In highly corrosive surroundings
- With unapproved anchors/fasteners

Storage

- Store only in the original packaging in a location protected from moisture

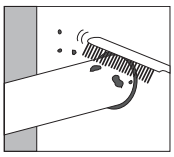

1. Clean plastic pipe.

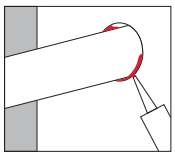

2. Close remaining gap to provide smoke and gas resistant seal.

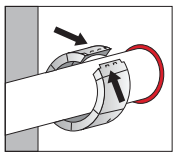

3. Close collar.

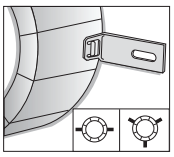

4. Attach fastening hooks.

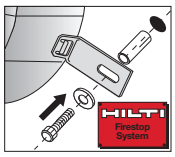

5. Fasten collar and identification plate (if required).

Hilti Firestop
Saving lives through innovation and education

Hilti. Outperform. Outlast.

High-performance intumescent firestop sealant FS-ONE MAX

Applications

- For effectively sealing most common through penetrations in a variety of base materials
- For use on concrete, masonry and drywall
- Mixed and multiple penetrations
- Metal pipe penetrations: copper, steel and EMT
- Insulated metal pipe penetrations: steel and copper
- Plastic pipe penetrations: closed or vented

Advantages

- US-produced: “Buy American” compliant
- One product for a variety of common through penetrations
- Cost-effective, easy-to-use solution
- Water-based and paintable
- Industry-leading VOC results
- Ethylene glycol-free



Chemical resistant



Mold and mildew resistant









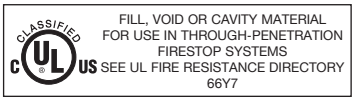

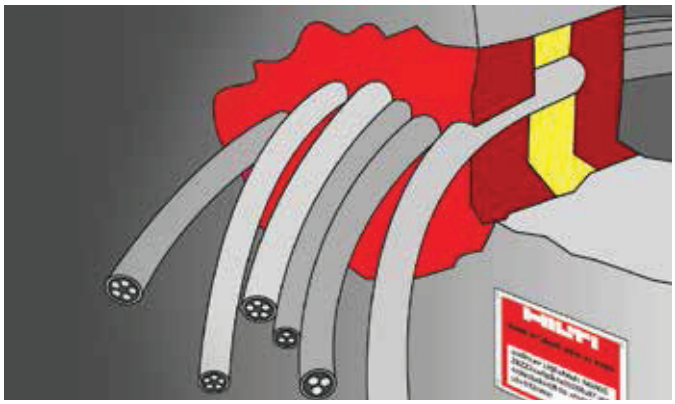

Technical data	
Chemical basis	Water-based acrylic dispersion
Approx. Density	84.3 lb/ft³
Color	Red
Application temperature range	41 - 104 °F
Approx. cure time[1)]	4 mm/3 days
Temperature resistance range	-4 to 212 °F
Mold and mildew performance	Class 0 (ASTM G21-96)
Mold and mildew resistance	Yes
Surface burning characteristics UL 723 (ASTM E84)	Flame spread: 0 Smoke development: 10
Tested in accordance with	UL 1479, ASTM E814, ASTM E84, CAN/ ULC-S115, ASTM G21, ASTM E90
California State fire marshal approval	CSFM Listing 4485-1200:0108 for FS-ONE MAX Intumescent Firestop Sealant
Expansion ratio (unrestricted, up to)	1:5

[1)] at 75°F/24°C, 50% relative humidity



Order Designation	Package Content	Item number
FS-ONE MAX 20oz foil (3 case + disp)	1x Foil pack dispenser manual CS 270-P1, 75x Firestop sealant FS-ONE MAX 20 oz foil	**3530252**
FS-ONE MAX 10oz tube (1 case)	12x Firestop sealant FS-ONE MAX 10 oz cartridge	**3530249**
FS-ONE MAX 5 gallon (18 pails)	18x Firestop sealant FS-ONE MAX 5 gallon pail	**3530263**
FS-ONE MAX 20oz foil (1 case)	25x Firestop sealant FS-ONE MAX 20 oz foil	**3530250**
FS-ONE MAX 20oz foil (3 cases)	75x Firestop sealant FS-ONE MAX 20 oz foil	**3530251**
FS-ONE MAX 20oz Foil-Pallet	600x FSONE-MAX 20 oz foil, 290x Bulk Shipping Condition	**3534713**
FS-ONE MAX 10 oz cartridge		**2101531**
FS-ONE MAX 5 gallon pail		**2101533**

12/16 DBS

REVIEWED BY CONTRACTOR

Kudlik Construction Ltd.

NAME: Sandra Rousseau P.Eng

DATE: Jul 25, 2018

NORCLAIR
MÉCANIQUE DE PROCÉDÉ

SHOP DRAWINGS

DA-MP-26 (NPW & PW pipe) **Date :** 2018-07-25

Information general	
Project : **WWTP UPGRADE - IQALUIT**	
Client : Kudlik Construction Ltd. To : Sandra Rousseau P.Eng., Project Manager	Project number : **2018-062** E-mail : srousseau@kudlik.biz
Contractor : **Norclair inc.**	Project number Norclair : **P1039**
Address : 1100, Montée Masson, Laval, QC, Canada H7E 4P2	
Project Manager : Dominic Papineau, Project Manager	E-mail: dpapineau@norclair.ca
Phone : 450-688-4012 # 720	Cell. : 514-409-1832

Information, subcontractor or supplier	
Sub/supplier : Wolseley	
Contact :	Phone :

Information on the equipment	
Speciality : **Process**	
Equipment : NPW & PW pipe	
Drawing reference : P505	
Specification reference : **22 11 16** (Page 2 / xx)	Division :
Article :	Number of pages : 6
Pipe runs by mechanical Final connexions to equipment by process.	

CONSULTANT APPROVAL

STANTEC PROJECT #: 110126045

SUBMITTAL # DA-MP-26

This review by Stantec is for general conformance with the design concept of Stantec's design of the:

☐ Architectural ☐ Structural ☑ Mechanical ☐ Electrical ☐ Other

Stantec

☑ REVIEWED

☐ REVIEWED, AS NOTED

☐ REVISE AND RESUBMIT

☐ NOT REVIEWED

component(s) only and does not mean that Stantec has verified or approves the shop drawing(s). The Contractor remains solely responsible for the shop drawing(s) and this review by Stantec does not relieve the Contractor of the Contractor's responsibility for errors or omissions in the shop drawing(s) or for meeting all requirements of the contract documents. This review does not mean that Stantec approves the detailed design inherent in the shop drawing, responsibility for which shall remain with the Contractor submitting same, nor does this review mean that Stantec accepts any deviation of the shop drawing(s) from the contract documents. The Contractor is responsible for confirming all dimensions and correlating them at the job site, for all construction means, methods and techniques, and for coordination of construction work of all trades, including coordination of all shop drawings.

DATE 2018-07-26

BY Brendan Zrum, P.Eng

1100, montée Masson
Laval, QC, Canada
H7E 4P2

Phone. : 450-688-4012
Fax : 450-661-6341
E-Mail : info@norclair.ca
www.norclair.ca

Streamline®
Tube • Fittings • Valves

COPPER TUBE FOR PLUMBING AND MECHANICAL APPLICATIONS

Job Name _____ **Contractor** _____

Job Location _____ **Wholesaler** _____

Engineer _____ **Streamline® Rep** _____

Product Description:

Streamline® Copper Tube for use in plumbing and mechanical applications. Available sizes (Type K, L, M, & DWV) ranging from ¼" to 8" in diameter. All tube shall be manufactured in the United States.

Material:

Streamline® Copper Tube is manufactured from UNS C12200 grade of copper.

Key Specifications:

Streamline® Copper Tube (Type K, L, M) shall conform to the NSF/ANSI 61 Annex G requirements and is manufactured to meet ASTM B88. Copper drainage tube (DWV) is made to meet ASTM B306. Copper refrigeration coils, ACR/Nitrogenized straight lengths and line sets are made to meet the chemical, mechanical, cleanness and eddy current testing requirements of the applicable specifications of ASTM B280.

Installation:

Installations shall comply with the latest applicable building codes for the local jurisdiction. For detailed installation instructions, consult the Copper Developement Association at copper.org.

References:

ASTM B75	Seamless Copper Tube
C12200	99.9% Pure Copper (can be used for potable water)
NSF/ANSI 61 Annex G	Safe Drinking Water Act (third party certification)
ASTM B88	Seamless Copper Water and Gas Tube (Type K, L, M)
ASTM B280	Seamless Copper Tube for Air Conditioning and Refrigerants
ASTM B306	Seamless Drainage Tube Code (DWV)

Copper [tube or fitting] UNS C122000 has been evaluated by NSF International to NSF/ANSI 61 for use in drinking water supplies of pH 6.5 and above. Drinking water supplies that are less than pH 6.5 may require corrosion control to limit leaching of copper into the drinking water.

MADE IN USA

A BRAND OF MUELLER INDUSTRIES

COPPER TUBE DATA

Streamline® Copper Tube sets the standard for quality, consistency and service in the plumbing industries. With a full line of copper tube products to support most all plumbing supply and DWV applications, Streamline® Copper Tube is available in all common types including Type K, Type L, Type M and DWV. Each piece of tube is incised marked and color coded for easy, long lasting identity. Manufactured in accordance with applicable standards, our ongoing commitment to quality continues to make Streamline® Copper Tube the preferred and specified brand of industry professionals.

TYPE K **RATED WORKING PRESSURE (PSIG)**

NOM. DIA.	WT/FT	FT/BNDL	150°F	200°F	300°F	400°F
1/4	0.145	500	913	860	842	537
3/8	0.269	500	960	904	885	565
1/2	0.344	500	758	713	698	446
5/8	0.418	200	626	589	577	368
3/4	0.641	200	724	682	668	426
1	0.839	100	557	524	513	327
1 1/4	1.04	100	452	425	416	266
1 1/2	1.36	100	420	396	387	247
2	2.06	–	370	348	341	217
2 1/2	2.93	–	338	319	312	199
3	4.00	–	328	308	302	193
3 1/2	5.12	–	311	293	286	183
4	6.51	–	306	288	282	180
5	9.67	–	293	276	270	172
6	13.90	–	295	277	271	173
8	25.90	–	314	295	289	184

TYPE L

1/4	0.126	500	775	729	714	456
3/8	0.198	500	662	623	610	389
1/2	0.285	500	613	577	565	361
5/8	0.362	200	537	505	495	316
3/4	0.455	200	495	466	456	291
1	0.655	100	420	395	387	247
1 1/4	0.884	100	373	351	344	219
1 1/2	1.14	100	347	327	320	204
2	1.75	–	309	291	285	182
2 1/2	2.48	–	285	269	263	168
3	3.33	–	270	254	248	159
3 1/2	4.29	–	258	243	238	152
4	5.38	–	249	235	230	147
5	7.61	–	229	215	211	135
6	10.2	–	213	201	196	125
8	19.3	–	230	216	212	135

Tables give computed allowable stress for annealed copper tube at indicated temperature.

COPPER TUBE DATA

TYPE M **RATED WORKING PRESSURE (PSIG)**

NOM. DIA.	WT/FT	FT/BNDL	150°F	200°F	300°F	400°F
3/8	0.145	500	485	456	447	285
1/2	0.204	500	420	395	387	247
3/4	0.328	200	346	326	319	204
1	0.465	100	286	270	264	169
1 1/4	0.682	100	287	271	265	169
1 1/2	0.94	100	282	265	259	166
2	1.46	-	254	239	234	149
2 1/2	2.03	-	233	219	215	137
3	2.68	-	215	203	199	127
3 1/2	3.58	-	214	202	197	126
4	4.66	-	213	201	197	126
5	6.66	-	198	186	182	116
6	8.92	-	186	175	171	109
8	16.5	-	195	183	180	115

TYPE DWV

NOM. DIA	WT/FT	FT/BNDL	150°F	200°F	300°F	400°F
1 1/4	0.65	100	280	269	258	165
1 1/2	0.809	100	249	240	230	147
2	1.07	-	185	178	170	109
3	1.69	-	135	130	125	80
4	2.87	-	127	122	117	75
5	4.43	-	129	124	119	76
6	6.1	-	126	121	116	74
8	10.6	-	124	119	114	73

Table give computed allowable stress for annealed copper tube at indicated temperature.

TECHNICAL DATA

Values of allowable internal working pressure for copper tube in service are based on the formula from ANSI B31, Standard Code for Pressure Piping:

$$P = \frac{2\,S\,tm}{D\,max - 0.8\,tm}$$

P = Allowable Pressure
S = Allowable stress
T = Wall thickness
D Max = Outside Diameter

D max - 0.8 tm

@150°F S = 5100 PSIG annealed
@ 200°F S= 4800PSIG annealed
@ 300°F S= 4700 PSIG annealed
@ 400°F S= 3000 PSIG annealed

All ratings listed for types K, L, M, DWV and refrigeration service tube in the preceding charts are calculated for tube in the annealed condition. These values should be used when soldering, brazing or welding is employed for joining components in a system. While the ratings for hard drawn tube are substantially higher, they should only be used for systems using properly designed flare or compression mechanical joints, since joining by any heating process might anneal (soften) the tube.

In designing a system, careful consideration should also be given to joint ratings as well as those of the components.

.7 National Research Council (NRC)/Institute for Research in Construction

.1 NRCC 38728, National Plumbing Code of Canada (NPC).

.8 Transport Canada (TC)

.1 Transportation of Dangerous Goods Act, 1992, c. 34 (TDGA).

1.3 ACTION AND INFORMATIONAL SUBMITTALS

.1 Provide submittals in accordance with Section 01 33 00 - Submittal Procedures.

.2 Product Data:

.1 Provide manufacturer's printed product literature and datasheets for insulation and adhesives, and include product characteristics, performance criteria, physical size, finish and limitations.

.2 Submit product data for the following:

.1 Mechanical Joints

.2 Valves

.3 Closeout Submittals:

.1 Provide maintenance data for incorporation into manual specified in Section 01 78 00 - Closeout Submittals.

Part 2 Product

2.1 PIPING

.1 Domestic hot, cold, recirculation, and non-potable systems within building.

.1 Above ground:

.1 Copper tube, hard drawn, type K: to ASTM B88.

.2 Stainless Steel tube. to ASTM A312

.2 Buried or embedded: copper tube, soft annealed, type L: to ASTM B88M, in long lengths and with no buried joints.

.2 Domestic water service and recirculation line below grade:

.1 Conform to standards specified by Civil package.

2.2 FITTINGS

.1 Domestic hot, cold, and non-potable systems within the building:

.1 NPS 2 (50mm) and Smaller

.1 Bronze pipe flanges and flanged fittings, Class 150: to ANSI/ASME B16.24.

.2 Cast bronze threaded fittings, Class 125: to ANSI/ASME B16.15.

.3 Cast copper, solder type: to ANSI/ASME B16.18.

.4 Wrought copper and copper alloy, solder type: to ANSI/ASME B16.22.

.2 NPS 2-1/2 (63mm) and larger:

.1 Wrought copper, roll grooved fittings to CSA B242, ASTM B 75-02 and ANSI B16.22

.2 Bronze pipe flanges and flanged fittings, Class 150: to ANSI/ ASME B16.24.

2.3 JOINTS

.1 General:

.1 Rubber gaskets, latex-free mm thick: to AWWA C111.

.2 Bolts, nuts, hex head and washers: to ASTM A307, heavy series.

.3 Solder: Lead Free .

.4 Teflon tape: for threaded joints.

.5 Grooved couplings: designed with angle bolt pads to provide rigid joint, complete with EPDM gasket.

.6 Dielectric connections between dissimilar metals: dielectric fitting, complete with thermoplastic liner.

Part 3 Execution

3.1 APPLICATION

.1 Manufacturer's Instructions: comply with manufacturer's written recommendations, including product technical bulletins, handling, storage and installation instructions, and datasheets.

3.2 INSTALLATION

.1 Install in accordance with National Plumbing Code of Canada - latest edition.

.2 Install pipe work in accordance with Section 23 05 05 - Installation of Pipework, supplemented as specified herein.

.3 Cut square, ream and clean tubing and tube ends, clean recesses of fittings and assemble without binding.

.4 Assemble piping using fittings manufactured to ANSI standards.

.5 Install tubing close to building structure to conserve headroom and space. Group exposed piping and run parallel to walls.

.6 Where pipe sizes differ from connection sizes of equipment, install reducing fittings close to equipment. Reducing bushings are not permitted.

.7 Lay copper tubing so that it is not in contact with dissimilar metal and will not be kinked or collapsed.

.8 Copper fixture supply pipes shall be secured to proper backing in the walls with wing back 90 degree elbows screwed to back with #8 x 50 mm long

Date: June 4, 2019

REVIEWED BY CONTRACTOR
Kudlik Construction Ltd.
NAME: Sandra Rousseau P.Eng
DATE: Jun 04, 2019

Transmittal

Arctic Electrical Nunavut Ltd
PO Box 1381
Iqaluit, Nu.
X0A 0H0
Phone: 867-975-3494
From: Lee Pitcher

Project **Waste Waste Treatment Plant**
Location Iqaluit NU
To Kudlik Construction
Contact: Sandra Rousseau P.Eng.
srousseau@kudlik.biz

SE-15R2 SU-ELE15R2
PO-Frontier Power

Attached are the following items:

- [x] Drawings
- [ ] Prints
- [ ] Plans
- [x] Specifications
- [ ] Information
- [ ] Submittals

Other:

THESE ARE TRANSMITTED FOR:

- [ ] Prior Approval
- [ ] Approval
- [ ] Approval as Submitted
- [ ] Approval as Noted
- [x] Resubmittal for Approval
- [ ] Corrections
- [ ] Your Use
- [ ] Review and Comment
- [ ] Record

Bids due on:
Other:

Qty	Type	MFG	Part

26 32 14 Power Generation Diesel-Silencer

STANTEC PROJECT #: 110126045
SUBMITTAL # ELE-15R2 (Generator Silencer)

This review by Stantec is for general conformance with the design concept of Stantec's design of the:

- [ ] Architectural
- [ ] Structural
- [x] Mechanical
- [ ] Electrical
- [ ] Other

component(s) only and does not mean that Stantec has verified or approves the shop drawing(s). The Contractor remains solely responsible for the shop drawing(s) and this review by Stantec does not relieve the Contractor of the Contractor's responsibility for errors or omissions in the shop drawing(s) or for meeting all requirements of the contract documents. This review does not mean that Stantec approves the detailed design inherent in the shop drawing, responsibility for which shall remain with the Contractor submitting same, nor does this review mean that Stantec accepts any deviation of the shop drawing(s) from the contract documents. The Contractor is responsible for confirming all dimensions and correlating them at the job site, for all construction means, methods and techniques, and for coordination of construction work of all trades, including coordination of all shop drawings.

Stantec

- [x] REVIEWED
- [ ] REVIEWED, AS NOTED
- [ ] REVISE AND RESUBMIT
- [ ] NOT REVIEWED

DATE 2019-06-05
BY Brendan Zrum, P.Eng

Notes:
Please review the attached approval drawings carefully. Production cannot be scheduled until a signed copy of the final approved drawing are received. Be aware that once drawings are approved, any errors due to incorrect information are the responsibility of the client.

Do not hesitate to contact me if you have any questions or concerns.

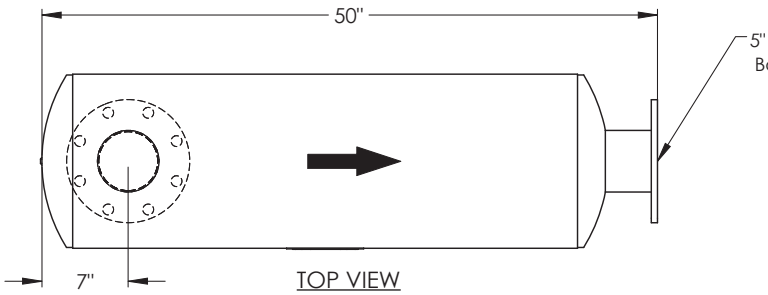

TOP VIEW

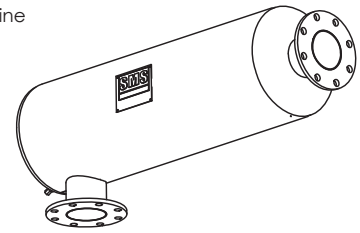

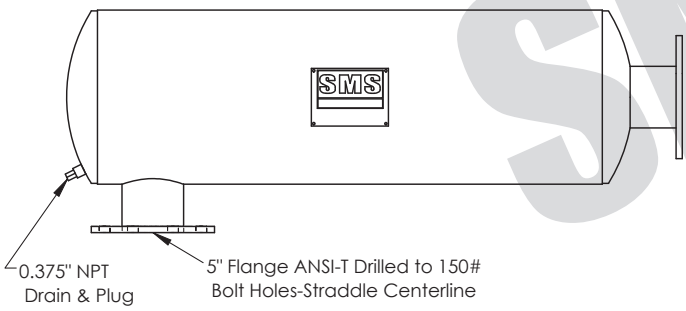

SIDE VIEW

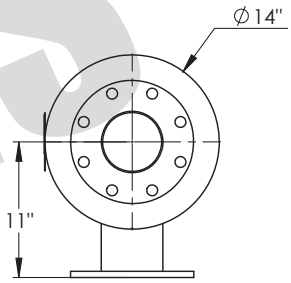

OUTLET END VIEW

P/O # Quote#19710

Standard Specifications

- Material: CS-A36 (44W)
- Uninsulated
- Tolerance— 1/8"; ∠ ±2°
- Finish:
  1,100 F High Heat Black Paint
- Tolerance: ±1/8"
- Weight: 85 lbs

All dimensions are in inches (") unless otherwise stated. Do not scale.

Title: 5" Cylindrical Silencer -Standard- Critical Grade (25-30 dBA) Side In-End Out-Carbon Steel	Dwg.Nbr	Revision	Plot Scale	NTS
	SM2-5	0	Format	A
			Date	05/22/2019 09:01:39
Client/Project: Frontier Power WWTP W.O # Quote#19710				

SMS SILENCERS RESERVES THE PROPIETARY RIGHTS TO THIS DRAWING AND THE DATA SHOWN THEREON AND IS SUBMITTED IN CONFIDENCE ONLY. SAID DRAWING AND/OR DATA ARE NOT TO BE USED OR REPRODUCED FOR ANY PURPOSE WITHOUT WRITTEN CONSENT OF SMS SILENCERS

www.smssilencers.com
sales@smssilencers.com
Tel: 905-459-1512
Fax: 905-459-3138
15 Bramalea Raod Unit#7
Brampton, ON
L6T 2W4

SMS SILENCERS INC.

V.1.0 Dec 10 2016

Project ID# 26110-Brent | Dwg ID# 26111

SMS SILENCERS INC.

SMS Silencers Inc.
7-15 Bramalea Rd.
Brampton, ON, Canada L6T 2W4

Toll Free 800 459 1512
Phone 905 459 1512
Fax 905 459 3138

Company Info

Frontier Power Products Ltd.
7983 Progress Way
Delta, BC
V4G 1A3, Canada

Prepared by: Brent MacMillan

Contact info

Will Osburn
wosburn@frontierpower.com

WWTP

Genset Manufacturer:	Caterpillar
Genset Model:	G3306TA - 220bhp
Engine Manufacturer:	Caterpillar
Engine Model:	G3306TA

Engine Information

Exhaust Flow:	967.00 ACFM	**Max BP:**	27.00 in wg	**Temp:**	1000.00 Fahrenheit	**KW:**	165
Number of Outlets:	1	**Outlet Diameter:**	5.00	**Flex Length:**	18.00	**Fuel Type:**	Other

Engine Octave Band

Engine Exhaust: Sound Pressure Level (LP) measured @ 1.00 m in dB

60 Hz	125 Hz	250 Hz	500 Hz	1 KHz	2 KHz	4 KHz	8 KHz	dB	dBA
106.00	108.00	99.00	98.00	97.00	96.00	95.00	95.00	111.22	103.51

Catalytic Converter IL.

No Catalytic Converter sound data is given.

Exhaust Back Pressure Detail

No User Selection for Exhaust data is made.

Silencer(s) Sizing Result

Silencer(s) Results below is based on user Selection of One Silencer using SMS Default dBA correction & Near Field Distance attenuation:

Recommended Minimum Outlet Size 4"

Silencer Part #	Description	Outlet Size	Back Pressure
SM2-5-SIEO	5" Critical Grade Cylindrical Silencer (25-30 dBA)	5 in	5.13 in wg
Silencer(s)			**5.13 in wg**
Qty : 1 Flex Dia : 5.00 Flex Length 18.00"		Flex Connector :	0.20 in wg

Exhaust Velocity = 7,095.00 ft/min OR 36 m/s

Octave Band

Octave Band	63 Hz	125 Hz	250 Hz	500 Hz	1 kHz	2 kHz	4 kHz	8 kHz	dB	dBA
Engine SPL @ 1 m	106.00	108.00	99.00	98.00	97.00	96.00	95.00	95.00	111.22	103.51
Silencer #1 : SM2 dB @ 1 m	16.00	27.00	30.00	29.00	25.00	21.00	20.00	20.00	34.74	30.85
Catalytic Converter IL.	0.00	0.00	0.00	0.00	0.00	0.00	0.00	0.00	0.00	0.00
dBA reduction correction	0.00	0.00	0.00	0.00	0.00	0.00	0.00	0.00		
Resulting SPL @ 1 m	90.00	81.00	69.00	69.00	72.00	75.00	75.00	75.00	90.98	81.21
Distance Attenuation dB	10.14	10.14	10.14	10.14	10.14	10.14	10.14	10.14		
Resulting SPL @7.00 m	79.86	70.86	58.86	58.86	61.86	64.86	64.86	64.86	80.84	71.07

Calculated noise level is based on free field conditions.
No site conditions and no calculation safety factors are taken into consideration.
Typical resulting noise tolerance is +/- 5dBA. No noise result guarantees are implied.

APPENDIX C

MAINTENANCE SCHEDULE

IQALUIT WWTP UPGRADE
MECHANICAL EQUIPMENT MAINTENANCE SCHEDULE

TAGS	EQUIPMENT	MAINTENANCE TASK	RECOMMENDED MAINTENANCE SCHEDULE
EW-1 (Plumbing Fixtures)	**Gravity Fed Emergency Eyewash Station**		
		General condition and cleanliness of eyewash	Monthly, or as required by use
		Solution replacement or addition of stabilizer chemicals	As per manufacturer's recommendations.
DEC-1 & DCE-2 (Fire Protection)	**Dry Chemical Fire Extinguishers**		
		Check general condition of extinguisher, review pressure gauge (in acceptable range), on hanger	Monthly
		Annual check and service of extinguisher per NFPA 10 requirements	Annually, by certified personnel (typically a fire protection agency)
Valves & Fittings, General/Common (Domestic Water Systems, Heating Water Systems, Fuel Oil Systems)	**Valves & Fittings common to all piping systems**		
	Isolation (ball, gate, butterfly, globe)	Check for proper operation, cycle valve from normal to other position (ensure globe valves are set to same position)	Annually
	Check valves	Check valve operation	Annually
	Strainers	Remove screen and clean	Every 6 months to Annually, adjusted as required
	Temperature gauges / thermometers	Check general condition, clean gauges faces to ensure visible, replace any defective or broken units	Every 6 months
	Pressure gauges	Check general condition, clean gauges faces to ensure visible, replace any defective or broken units	Every 6 months
Valves & Fittings (Heating Water Systems)	**Valves & Fittings specific to Heating Water Systems**		
	Pressure / temperature relief	Test operation and functionality of valve	Annually
	Manual & automatic air vents	Test operation and functionality of valve	Annually
	Solenoid valves	Test operation and functionality of valve	Annually
	Control valves (2-way and 3-way)	Test operation and functionality of valve	Annually
Valves & Fittings (Domestic Water Systems)	**Valves & Fittings specific to Domestic Water Systems**		
	Reduced Pressure Backflow Preventers	Test operation to requirements of CSA-B64.10 and AHJ.	Annually, by certified personnel (typically a professional plumber)
	Pressure / temperature relief	Test operation and functionality of valve	Annually
	Pressure reducing	Test operation and confirm pressure settings	Annually
Valves & Fittings (Fuel Oil Systems)	**Valves & Fittings specific to Fuel Oil Systems**		
	Fusible link valve	Test operation and functionality of valve	Annually
	Anti-siphon valve	Test operation and functionality of valve	Annually
	Solenoid valves	Test operation and functionality of valve	Annually
	Pressure relief valve	Test operation and functionality of valve	Annually
Piping (Heating Water Systems)	**Piping & Insulation**		
	Exposed / non-insulated piping	Review for obvious signs of leaks	Bi-monthly or one week after system operation mode (off / on) has changed after extended period in opposite operation mode
	Insulated piping	Review for water staining (indicating possible leak) and general condition of insulation and covering	Bi-monthly or one week after system operation mode (off / on) has changed after extended period in opposite operation mode
Piping (Domestic Water System)	**Piping & Insulation**		
	Exposed / non-insulated piping	Review for obvious signs of leaks	Bi-monthly
	Insulated piping	Review for water staining (indicating possible leak) and general condition of insulation and covering	Bi-monthly
Piping (Fuel Oil System)	**Piping**		
		Review for obvious signs of leaks	Monthly
TK-1.3 / P-1.5 (Heating Water System)	**Glycol Fill Tank**		
		Check tank fill level and log any added glycol solution for tracking / future info and planning	Weekly when heating system operational
		Check tank fill level and log any added glycol solution for tracking / future info and planning	Monthly when heating system not operational
TK-1.5 (Heating Water System)	**Boiler PRV Discharge Tank**		
		Check tank for fluid signifying heating system over pressure/temperature	Weekly
TK-1.1 & TK-1.2 (Heating Water System)	**Expansion Tanks, Hydronic and Thermal**		
		Check tank air pressure	Annually when heating system not operational and tank can be isolated/drained.

IQALUIT WWTP UPGRADE
MECHANICAL EQUIPMENT MAINTENANCE SCHEDULE

TAGS	EQUIPMENT	MAINTENANCE TASK	RECOMMENDED MAINTENANCE SCHEDULE
		Check for visible signs of leaks or damage	Monthly
TK-3.1 & TK-3.2 (Domestic Hot Water Systems)	**Expansion Tanks, Thermal**		
		Check tank air pressure	Annually when heating system not operational and tank can be isolated/drained.
		Check for visible signs of leaks or damage	Monthly
TK-4.1 (Fuel Oil System)	**Exterior Fuel Oil Storage Tank**		
	Tank & fittings	Check for visible signs of leaks and damage	Bi-weekly
	Tank secondary containment leak monitoring	Check vacuum gauge for signs of failure/leaks	Monthly
	Tank fill point spill box	Check for spilled fuel oil in spill box	Monthly
	Low level sensor	Check for proper operation	Annually
	2-way Siphon protection solenoid valve	Check for proper operation	Annually, at the start of heating season
	Tank mounted levelometer	Check for proper operation and confirm volume against remote mounted levelometer	Annually
	Remote mounted levelometer	Check for proper operation and confirm volume against tank mounted levelometer	Annually
TK-4.2 & TK-4.3 (Fuel Oil System)	**Interior Fuel Oil Day Tanks**		
	Tank & fittings	Check for visible signs of leaks and damage	Bi-weekly
	Tank secondary containment	Check tank leak monitor / visual inspect secondary containment for leaks	Monthly
	Level sensors	Check for proper operation	Annually
P-1.1, P-1.2, P-1.3, P-1.4, P-1.5, P-1.6 (Heating Water System)	**Heating Water System Pumps**		
	Pump operation	Check pump is operating smoothly and quietly	Bi-weekly
	Leaks	Check for leaks at pump flanges and at shaft seals	Bi-weekly
	Preventative & general maintenance	Refer to individual pump manuals for additional preventative and general maintenance requirements	As recommend by manufacturer
P-2.1, P-2.2, P-2.3, P-2.4, P-2.5, P-2.6 (Sump pump System)	**Duplex Sump Pumps & Controls**		
	Pump operation	Check pump is operating smoothly and quietly	Bi-weekly
	Leaks	Check for leaks at pump flanges and at shaft seals	Bi-weekly
	Controls	Verify controls operate correctly and lead/lag operation functions correctly	Annually
	Pump intake and sump	Verify pump intake is free of debris and sump does not contain debris or materials that cannot be processed by the pumps	Every 6 months
	Preventative & general maintenance	Refer to individual pump manuals for additional preventative and general maintenance requirements	As recommend by manufacturer
P-3.1, P-3.2, P-3.3, P-3.4, P-3.5 (Domestic Water System)	**Domestic Water System Pumps**		
	Pump operation	Check pump is operating smoothly and quietly	Bi-weekly
	Leaks	Check for leaks at pump flanges and at shaft seals	Bi-weekly
	Preventative & general maintenance	Refer to individual pump manuals for additional preventative and general maintenance requirements	As recommend by manufacturer
P-4.1 & P-4.2 (Fuel Oil System)	**Fuel Oil Transfer Pumps**		
	Pump package and fittings	Check for obvious signs of leaks or damage	Bi-weekly
	Controls	Verify controls operate as per pump manual and lead/lag operation functions correctly.	Annually
	Preventative & general maintenance	Refer to Viking Pump Duplex Fuel Oil Packages Field Start-Up Guide for additional preventative and general maintenance requirements	As recommend by manufacturer
Heating Water System Fluid	**Propylene Glycol Solution, 50%**		
		Test system fluid properties and log valves for tracking / future info and planning	Weekly until system stabilizes then bi-weekly
Fluid Filters (Heating Water System)	**Sidestream Filter Assembly**		
	Sight glass	Check sight glass for fluid flow and for visual observation of heating fluid	Monthly
	Filters	Check filters for condition and replace as required	Monthly
Fluid Filters (Fuel Oil System)	**Fuel Oil Filters**		
	Fuel oil transfer pump pre-filter	Check filters for condition and replace as required	Bi-monthly
	Boiler burner filter	Check filters for condition and replace as required	Bi-monthly

IQALUIT WWTP UPGRADE
MECHANICAL EQUIPMENT MAINTENANCE SCHEDULE

TAGS	EQUIPMENT	MAINTENANCE TASK	RECOMMENDED MAINTENANCE SCHEDULE
(Fuel Oil System)	Generator filter	Check filters for condition and replace as required	Annually or sooner as recommended by generator manufacturer based on generator run time and age
De-Aerators (Fuel Oil System)	**Tigerloop Fuel Oil Deaerators**		
		Check for excess air in de-aerator and bleed out if required	Bi-weekly
B-1 and B-2 (Heating Water System)	**Heating Water Boilers, Oil-Fired**		
	Boilers	Check general condition and for obvious signs of leaks	Bi-weekly
	Burners	Check general condition and for obvious signs of leaks	Bi-weekly
	Boiler controls	Check for proper operation	Annually
	Boiler safety devices & limits	Check operation for proper functionality and shut down of boiler	Annually
	Preventative & general maintenance	Refer to boiler installation and service manual for additional preventative and general maintenance requirements	As recommend by manufacturer
DHWT-1 (Domestic Water System)	**Domestic Hot Water Tank, Oil-Fired**		
	Tank	Check general condition and for obvious signs of leaks	Bi-weekly
	Burners	Check general condition and for obvious signs of leaks	Bi-weekly
	Safety devices & limits	Check operation for proper functionality and shut down of boiler	Annually
	Preventative & general maintenance	Refer to tank installation and service manual for additional preventative and general maintenance requirements	As recommend by manufacturer
Chimneys (Heating & Domestic Water Systems)	**Chimneys**		
	Exterior surfaces	Check for visible signs of leaks or corrosion	Bi-weekly
	Base tee drain	Check for accumulation of fluid and drain as required	Monthly
	Interior surfaces	Check for visible signs of corrosion and general condition, clean as required	Annually
UH-1.1 to UH-1.7, UH-2.1 to UH-2.8 (Heating Water System)	**Unit Heaters**		
	Fan	Check for proper operation, unusual noises	Every 6 months
	Coil	Check condition of coil surfaces and vacuum dust build-up	Annually
CUH-1.1 (Heating Water System)	**Cabinet Unit Heater**		
	Fan	Check for proper operation, unusual noises	Every 6 months
	Coil	Check condition of coil surfaces and vacuum dust build-up	Annually
E-WF-1, WF-1, Elec BB (Heating Water System)	**Baseboard Radiation**		
	Coil	Check condition of coil surfaces and vacuum dust build-up	Annually
HEX-3.1 and HEX-3.2 (Heating Water System and Domestic Water / Non-Potable Hot Water Systems)	**Heat Exchangers**		
	Exterior surfaces	Check for visible signs of leaks	Monthly
	Operation	Confirm temperatures in/out of heat exchanger meet specified values	Annually
AHU-2 & AHU-3 (Ventilation System)	**Air Handling Units**		
	Heat recovery core	Check condition of core surfaces and vacuum dust build-up	Annually
	Heating coils	Check condition of coil surfaces and vacuum dust build-up	Annually
	Filters	Check condition and replace as required	Every 3 months or as required
	Bypass dampers	Check general condition and operation	Annually
	Fan wheel	Check general condition	Annually
	Fan belt	Check belt tension	Monthly
	Fan motor	Lubrication - lubricate if required	Every 6 months
	Preventative & general maintenance	Refer to unit installation and service manual for additional preventative and general maintenance requirements	As recommend by manufacturer
HRV-1 (Ventilation System)	**Heat Recovery Ventilator**		
	Filters	Check condition and replace as required	Every 3 months or as required
	Heat recovery core	Check condition of core and vacuum / clean core	Annually
	Blowers	Check condition and vacuum clean	Annually
	Preventative & general maintenance	Refer to unit installation and service manual for additional preventative and general maintenance requirements	As recommend by manufacturer
CF-1 & CF-2 (Ventilation System)	**Cooling Fans**		
	Housing	Check condition and clean	Annually
	Fan wheel	Check condition and clean	Annually
CD-1, CD-2, CD-3, CD-4, CD-5, CD-6, CD-7,	**Motorized (Control) Dampers**		

IQALUIT WWTP UPGRADE
MECHANICAL EQUIPMENT MAINTENANCE SCHEDULE

TAGS	EQUIPMENT	MAINTENANCE TASK	RECOMMENDED MAINTENANCE SCHEDULE
CD-8, CD-9, CD-11, CD-12, CD-13, CD-14		Check general condition and verify operation	Annually
PHC-1, RHC-1, HC-1.3 (Ventilation System)	**Hydronic Air Heating Coils**		
		Check condition of coil surfaces, comb bent fins straight, vacuum dust build-up	Annually
Diffusers & Grilles (Ventilation System)	**Air Outlets and Inlets**		
		Check condition, ensure balancing dampers are set correctly / have not come loose, vacuum clean	Annually
Air filters (Ventilation System)	**Duct mounted air filters**		
		Check condition and replace as required	Every 3 months or as required

Note: Refer to equipment Operation & Maintenance Manuals for more detailed information on equipment maintenance schedule.

APPENDIX D

EQUIPMENT MAINTENANCE AND OPERATION MANUALS

VOLUME
1 OF 3

MECHANICAL

OPERATION & MAINTENANCE
MANUAL

WASTE WATER TREATMENT

IQALUIT
NUNAVUT

2018/2019

VOLUME
1 OF 3

MECHANICAL

OPERATION &
MAINTENANCE
MANUAL

WASTE WATER
TREATMENT
UPGRADE

IQALUIT
NUNAVUT

2018/2019

PREPARED BY

Mecanique Nordique
Inc

General Contractor

Pilitak Entreprises Ltd
1519 Federal Road
Iqaluit
Nunavut
X0A 0H0
Sandra Rousseau
866-781-0704
srousseau@kudlik.biz

Mechanical Contractor

Mécanique Nordique Inc
1255 J.A. Bombardier
Lévis
Québec
G7A 2P4
Martin Boucher
418-496-1109
martin@mecaniquenordique.com

Mécanique Nordique
Plumbing
Heating
Ventillation
mecanique.nordique@hotmail.com

1255 Rue J.A. Bombardier Lévis Quebec G7A 2P4
Tél : (418) 496-1109 Fax : (418) 496-3803

Lévis 2018 november 24

City of Iqaluit

WARRANTY LETTER
Project

Waste Water Treatement Upgrade

Iqaluit Nu

With th following Mécanique Nordique Inc warranty that all material and work for Plumbing , Heating , Ventilation and Control system are conform with drawings and specs for this project and warranty materials and labor for one year start with date of project acceptance.

_____

Martin Boucher
Président

INDEX
VOLUME 1

1 = AD-001 FANS

2 = AD-002 REGISTERS & DIFFUSERS

3 = AD-003 HRV VENMAR

4 = AD-004 MOTORIZED DAMPERS

5 = AD-005 OIL TANKS

6 = AD-006 CHIMNEYS

7 = AD-007 HYDRONIC PUMPS

8 = AD-008 PLUMBING PUMPS

9 = AD-009 FUEL OIL PUMP

10 = AD-010 DOMESTIC WATER HEATER

11 = AD-011 BRAZED PLATE HEAT EXCHANGER

12 = AD-012 EXPANSION TANKS

13 = AD-013 AIR SEPARATOR

14 = AD-014 BOILERS

15 = AD-015 HVAC WATER TREATMENT

16 = AD-016 SUMP PUMPS

1

REVIEWED BY CONTRACTOR

Kudlik Construction Ltd.

Alexandra Rousseau P.Eng

DATE: Mai 29, 2018

Mécanique Nordique
Plumbing
Heating
Ventillation
mecanique.nordique@hotmail.com

1255 Rue J.A.Bombardier
Lévis, Québec
G7A 2P4
Téléphone: 418-496-1109
Télécopieur: 418-496-3803

IQALUIT WWTP UPGRADE

DRAWING FOR APPROVAL

Ingineer : NUNAMI STANTEC

DRAWING #: AD-001

Section	23 34 00
Article	PART 2
Plans	M-801
Application	: CF-1 & CF-2
Brand	: GREENHECK
Model	:SQ-100-VG
Revised #	:
Supplyer	: EH PRICE

STANTEC PROJECT #: 110126045

SUBMITTAL # AD-001

This review by Stantec is for general conformance with the design concept of Stantec's design of the:

☐ Architectural ☐ Electrical
☐ Structural ☐ Other
☑ Mechanical

component(s) only and does not mean that Stantec has verified or approves the shop drawing(s). The Contractor remains solely responsible for the shop drawing(s) and this review by Stantec does not relieve the Contractor of the Contractor's responsibility for errors or omissions in the shop drawing(s) or for meeting all requirements of the contract documents. This review does not mean that Stantec approves the detailed design inherent in the shop drawing, responsibility for which shall remain with the Contractor submitting same, nor does this review mean that Stantec accepts any deviation of the shop drawing(s) from the contract documents. The Contractor is responsible for confirming all dimensions and correlating them at the job site, for all construction means, methods and techniques, and for coordination of construction work of all trades, including coordination of all shop drawings.

Stantec

☑ REVIEWED

☐ REVIEWED, AS NOTED

☐ REVISE AND RESUBMIT

☐ NOT REVIEWED

DATE 2018-06-04

BY Brendan Zrum, P.Eng

Pages incl. 11

Date : **2018-05-29**

By : **Mécanique Nordique Inc.**

SUBMITTAL

Job Title: **IQALUIT - WWTP Upgrade**

Engineer: STANTEC
Contractor: MECANIQUE NORDIQUE
Elevation: (ft) 243
Date: 5/29/2018
Submitted By: Renee Gaudreault

E H PRICE LIMITED
4600 BOUL HENRI BOURASSA
BUREAU #140
QUEBEC, QC G1H 3A5
CA
Phone: (418)622-9946
Fax: (418)622-0322
Email Address: rgaudreault@ehpricesales.com

GREENHECK
Building Value in Air.

Model: SQ-100-VG

Direct Drive Centrifugal Inline Fan

Dimensional	
Quantity	1
Weight w/o Acc's (lb)	45
Weight w/ Acc's (lb)	79

Performance	
Requested Volume (CFM)	635
Actual Volume (CFM)	635
Total External SP (in. wg)	0.535
Fan RPM	1280
Operating Power (hp)	0.09
Elevation (ft)	243
Airstream Temp.(F)	70
Air Density (lb/ft3)	0.074
Tip Speed (ft/min)	3,748
Static Eff. (%)	58

Motor	
Motor Mounted	Yes
Size (hp)	1/4
Voltage/Cycle/Phase	115/60/1
Enclosure	ODP
Motor RPM	1725
Windings	1

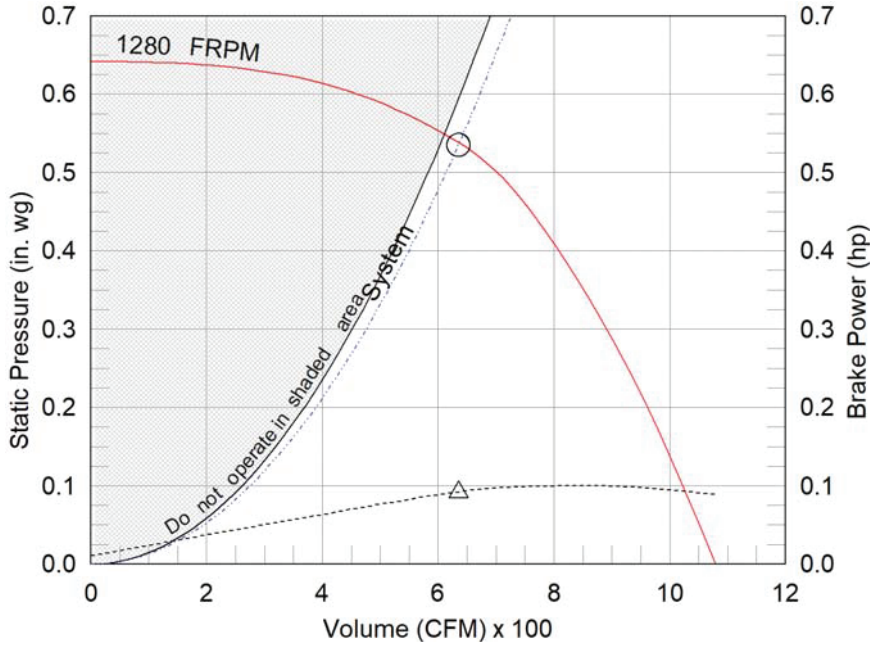

Operating Bhp point
Operating point at Total External SP
Fan curve
System curve
Brake horsepower curve

Static Pressure Calculations

External SP	0.5 in. wg
Filters	0.035 in. wg
Total External SP	0.535 in. wg

Sound Power by Octave Band

Sound Data	62.5	125	250	500	1000	2000	4000	8000	LwA	dBA	Sones
Inlet	65	67	63	64	61	56	47	46	65	54	6.5
Radiated	66	69	57	58	56	50	41	42	61	49	5.1

Notes:

All dimensions shown are in units of in.
*NEC FLA - based on tables 430.248 or 430.250 of National Electrical Code 2014. Actual motor FLA may vary, for sizing thermal overload, consult factory.
LwA - A weighted sound power level, based on ANSI S1.4
dBA - A weighted sound pressure level, based on 11.5 dB attenuation per Octave band at 5 ft - dBA levels are not licensed by AMCA International
Sones - calculated using AMCA 301 at 5 ft

Building Value in Air

Model: SQ-100-VG

Direct Drive Centrifugal Inline Fan

Standard Construction Features:

- Galvanized steel housing - Backward inclined aluminum wheel - Two bolted access panels - Integral duct connection flanges - Ball bearing motors (sizes 100-160 and all vari-green motors), sleeve bearing motors (sizes 60-95) - Corrosion resistant fasteners

Selected Options & Accessories:

Motor - Vari-Green EC motor with Dial or 0-10VDC Input
Control - Vari-Green Dial on Exterior of Fan Housing, Mounted and Wired
Switch, NEMA-1, Toggle, Shipped with Unit
Junction Box Mounted & Wired
Sloped Filter Box, 1 in. Aluminum Filters
Unit Warranty: 1 Yr (Standard)

C/W SSH-30 ISOLATORS

SQ-100-VG

Direct Drive Centrifugal Inline Fan

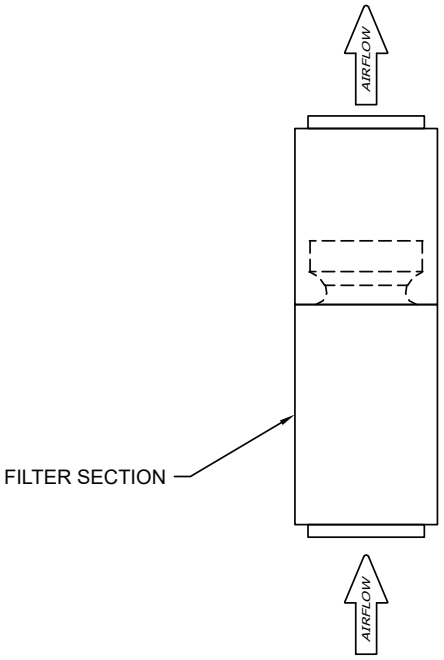

TOP VIEW

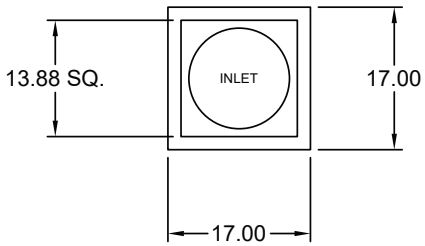

END VIEW

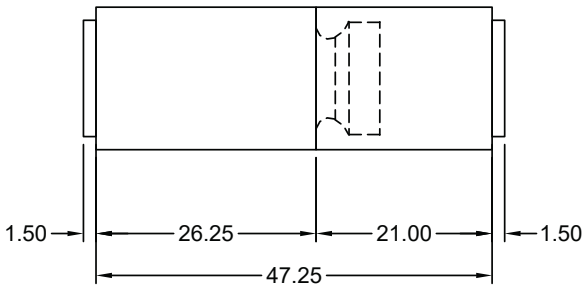

SIDE VIEW

Notes: All dimensions shown are in units of in.

Vari-Green
Motor & Control Options

An EC motor that uses AC input power and internally converts it to DC power. Motor accepts a 0-10VDC control signal along with a 24V source to power controls in the motor. Motor is operable in the 2-10VDC range and off while in the 0-1.9VDC range. Vari-Green motors feature a soft-start and inherent thermal and current protection built into each unit. Inrush current at start up is eliminated and the motor will automatically reduce speed or turn off if overloaded or it becomes too hot.

An EC motor that uses AC input power and internally converts it to DC power. Potentiometer (dial) mounted on the fan housing adjusts the speed (RPM) down 80%. Vari-Green motors feature a soft-start and inherent thermal and current protection built into each unit. Inrush current at start up is eliminated and the motor will automatically reduce speed or turn off if overloaded or it becomes too hot.

Motor Configuration

Input Voltage:	115
Speed Reference:	0-10VDC
24V Required:	No
Permanent Dial:	No
Balance Dial Included:	N/A

Control Configuration

Control Type:	Dial on Fan
Transformer:	Included

Vari-Green

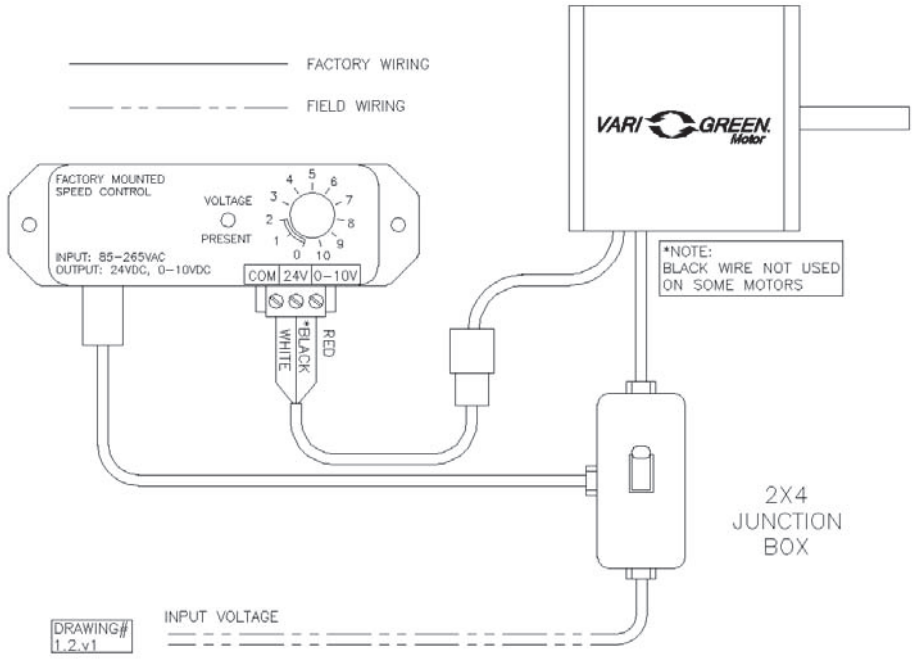

Model: SQ-100-VG

Direct Drive Centrifugal Inline Fan

Dimensional	
Quantity	1
Weight w/o Acc's (lb)	45
Weight w/ Acc's (lb)	79

Performance	
Requested Volume (CFM)	848
Actual Volume (CFM)	848
Total External SP (in. wg)	0.563
Fan RPM	1432
Operating Power (hp)	0.14
Elevation (ft)	243
Airstream Temp.(F)	70
Air Density (lb/ft3)	0.074
Tip Speed (ft/min)	4,195
Static Eff. (%)	54

Motor	
Motor Mounted	Yes
Size (hp)	1/4
Voltage/Cycle/Phase	115/60/1
Enclosure	ODP
Motor RPM	1725
Windings	1

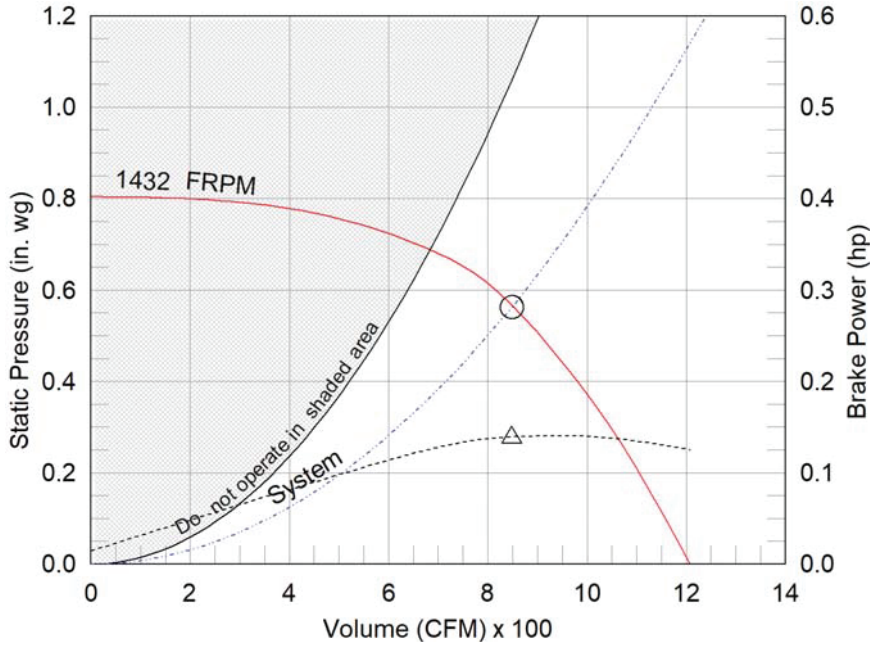

△ Operating Bhp point
○ Operating point at Total External SP
Fan curve
System curve
Brake horsepower curve

Static Pressure Calculations

External SP	0.5	in. wg
Filters	0.063	in. wg
Total External SP	0.563	in. wg

Sound Power by Octave Band

Sound Data	62.5	125	250	500	1000	2000	4000	8000	LwA	dBA	Sones
Inlet	66	69	67	67	63	58	51	49	68	56	7.6
Radiated	67	71	61	60	58	52	45	45	63	51	6.0

Notes:

All dimensions shown are in units of in.
*NEC FLA - based on tables 430.248 or 430.250 of National Electrical Code 2014. Actual motor FLA may vary, for sizing thermal overload, consult factory.
LwA - A weighted sound power level, based on ANSI S1.4
dBA - A weighted sound pressure level, based on 11.5 dB attenuation per Octave band at 5 ft - dBA levels are not licensed by AMCA International
Sones - calculated using AMCA 301 at 5 ft

Model: SQ-100-VG

Direct Drive Centrifugal Inline Fan

Standard Construction Features:

- Galvanized steel housing - Backward inclined aluminum wheel - Two bolted access panels - Integral duct connection flanges - Ball bearing motors (sizes 100-160 and all vari-green motors), sleeve bearing motors (sizes 60-95) - Corrosion resistant fasteners

Selected Options & Accessories:

Motor - Vari-Green EC motor with Dial or 0-10VDC Input
Control - Vari-Green Dial on Exterior of Fan Housing, Mounted and Wired
Switch, NEMA-1, Toggle, Shipped with Unit
Junction Box Mounted & Wired
Sloped Filter Box, 1 in. Aluminum Filters
Unit Warranty: 1 Yr (Standard)

C/W SSH-30 ISOLATORS

SQ-100-VG

Direct Drive Centrifugal Inline Fan

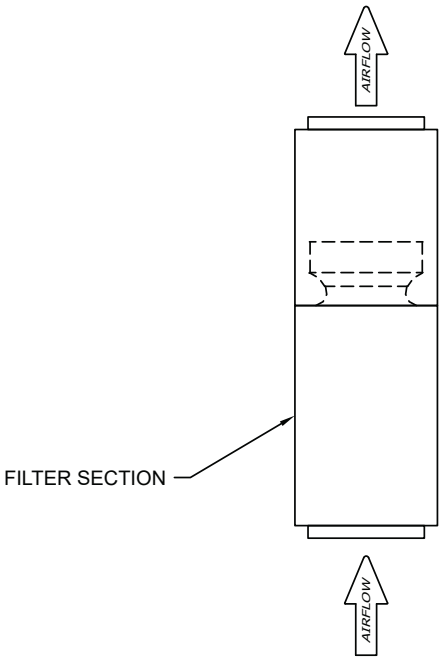

TOP VIEW

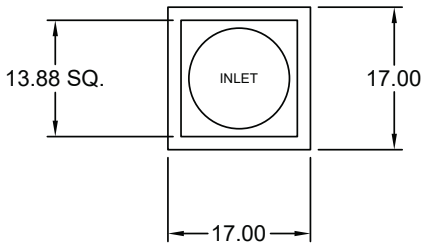

END VIEW

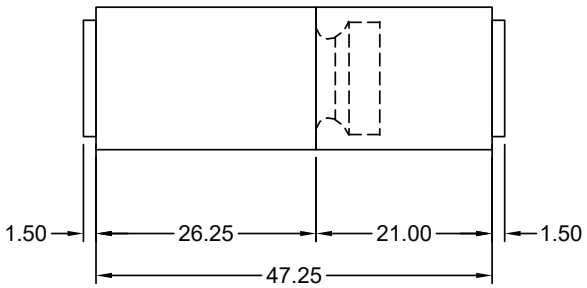

SIDE VIEW

Notes: All dimensions shown are in units of in.

Vari-Green
Motor & Control Options

An EC motor that uses AC input power and internally converts it to DC power. Motor accepts a 0-10VDC control signal along with a 24V source to power controls in the motor. Motor is operable in the 2-10VDC range and off while in the 0-1.9VDC range. Vari-Green motors feature a soft-start and inherent thermal and current protection built into each unit. Inrush current at start up is eliminated and the motor will automatically reduce speed or turn off if overloaded or it becomes too hot.

An EC motor that uses AC input power and internally converts it to DC power. Potentiometer (dial) mounted on the fan housing adjusts the speed (RPM) down 80%. Vari-Green motors feature a soft-start and inherent thermal and current protection built into each unit. Inrush current at start up is eliminated and the motor will automatically reduce speed or turn off if overloaded or it becomes too hot.

Motor Configuration

Input Voltage:	115
Speed Reference:	0-10VDC
24V Required:	No
Permanent Dial:	No
Balance Dial Included:	N/A

Control Configuration

Control Type:	Dial on Fan
Transformer:	Included

Vari-Green

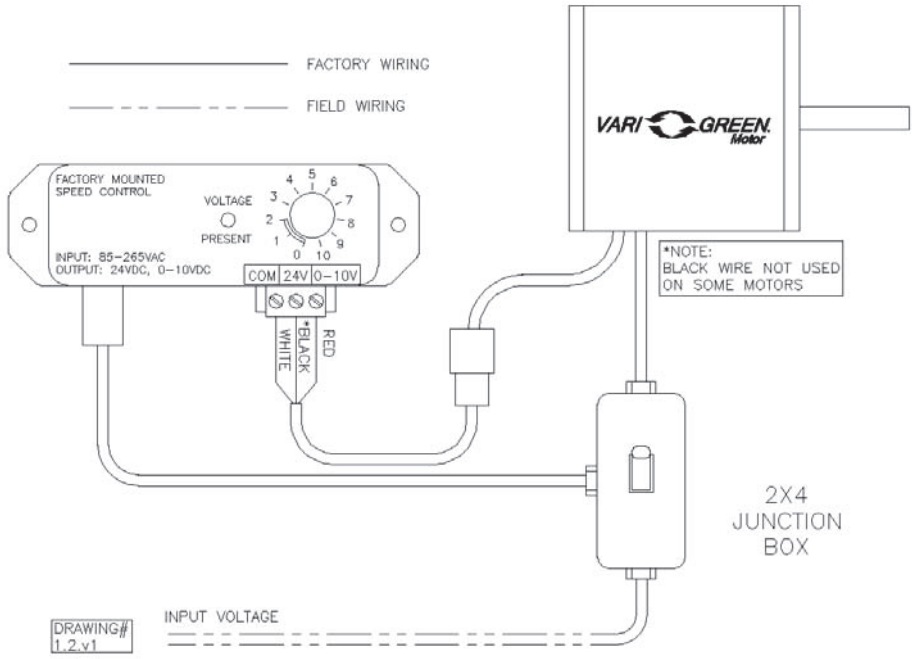

HANGING ISOLATOR (1" DEFLECTION)

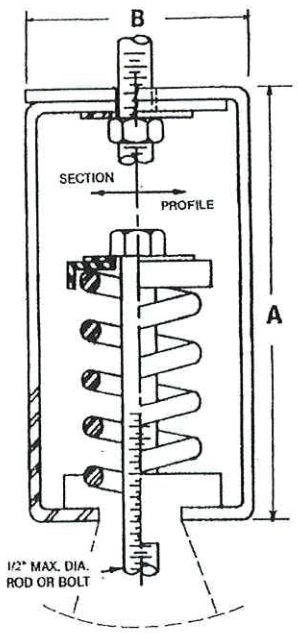

FEATURES

- .HEAVY DUTY GALV. HANGER BOX
- .COLOR CODED SPRINGS FOR IDENTIFICATION
- .EPDM CUP OR EPDM WASHER TO PREVENT METAL TO METAL CONTACT
- .30 DEGREE SWING

NOTE: NUTS, BOLTS, RODS, SUPPLIED BY OTHERS

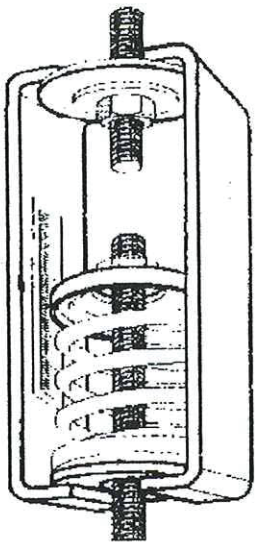

SSH-15 TO SSH-300

SSH-400 TO SSH-1000

MODEL	MAX. LOAD @ 1" DEFL. LBS.	SOLID LOAD LBS.	SOLID DEFL. INCH	COLOR CODE	DIMENSIONS A X B INCHES		ROD DIA.
SSH- 15	15	28.7	1.9	GREY	5.0"	2.50"	1/2"
SSH- 30	30	48.7	1.6	YELLOW	AS ABOVE		1/2"
SSH- 60	60	90.0	1.5	RED	AS ABOVE		1/2"
SSH- 100	100	157.2	1.6	BLUE	AS ABOVE		1/2"
SSH- 150	150	240.5	1.6	BLACK	AS ABOVE		1/2"
SSH- 200	200	269.5	1.4	WHITE	AS ABOVE		1/2"
SSH- 300	300	420.0	1.4	GREEN	AS ABOVE		1/2"
SSH- 400	415	622.5	1.5	RED/BLK	7.5"	3.25"	5/8"
SSH- 500	500	705.0	1.4	SVR/PNK	7.5"	3.25"	3/4"
SSH- 700	715	1072.5	1.5	BLUE	7.5"	3.25"	3/4"
SSH- 1000	1060	1208.4	1.1	ORANGE	7.5"	3.25"	3/4"

PROJECT: IQALUIT WWTP UPGRADE CUSTOMER: MECANIQUE NORDIQUE

ENGINEER: _____ SUPPLIER: EH PRICE

MANUFACTURED BY: ICR ENTERPRISE *(DIV. G. SJODIN HVAC SUPPLY INC.)*

DRWG # 1201 DATED: 3/5/07

GREENHECK
Building Value in Air.

Document 472058
Models SQ and BSQ
Centrifugal Inline Fans

Installation, Operation and Maintenance Manual

Please read and save these instructions for future reference. Read carefully before attempting to assemble, install, operate or maintain the product described. Protect yourself and others by observing all safety information. Failure to comply with instructions could result in personal injury and/or property damage!

Model SQ Direct Drive

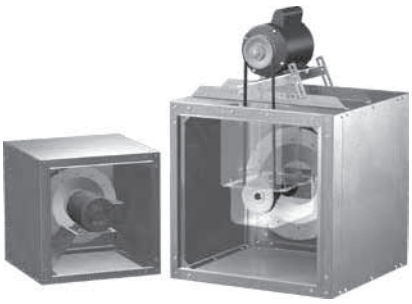

Model SQ is a direct drive centrifugal inline exhaust fan. These fans are specifically designed for inline applications. Performance capabilities range up to 5,000 cfm *(8,500 m^3/hr)* and up to 2.0 in. wg *(498 Pa)* of static pressure. SQ fans are available in thirteen sizes with nominal wheel diameter ranging from 6 to 16 inches *(152 to 406 mm)* (060 to 160 unit sizes). Each fan shall bear a permanently affixed manufacturers engraved metal nameplate containing the model number and individual serial number.

Model BSQ Belt Drive

Model BSQ is a belt drive centrifugal inline exhaust fan. These fans are specifically designed for inline applications. Performance capabilities range up to 27,200 cfm *(46,200 m^3/hr)* and up to 4.0 in. wg *(996 Pa)* of static pressure. BSQ fans are available in fourteen sizes with nominal wheel diameter ranging from 7 to 42 inches *(178 to 1067 mm)* (070 to 420 unit sizes). Each fan shall bear a permanently affixed manufacturers engraved metal nameplate containing the model number and individual serial number.

General Safety Information

Only qualified personnel should install this fan. Personnel should have a clear understanding of these instructions and should be aware of general safety precautions. Improper installation can result in electric shock, possible injury due to coming in contact with moving parts, as well as other potential hazards. Other considerations may be required if seismic activity is present. If more information is needed, contact a licensed professional engineer before moving forward.

1. Follow all local electrical and safety codes, as well as the National Electrical Code (NEC) and the National Fire Protection Agency (NFPA), where applicable. Follow the Canadian Electric Code (CEC) in Canada.
2. The rotation of the wheel is critical. It must be free to rotate without striking or rubbing any stationary objects.
3. Motor must be securely and adequately grounded.
4. Do not spin fan wheel faster than max cataloged fan RPM. Adjustments to fan speed significantly affects motor load. If the fan RPM is changed, the motor current should be checked to make sure it is not exceeding the motor nameplate amps.
5. Do not allow the power cable to kink or come in contact with oil, grease, hot surfaces or chemicals. Replace cord immediately if damaged.
6. Verify that the power source is compatible with the equipment.
7. Never open access doors to a duct while the fan is running.

DANGER
Always disconnect, lock and tag power source before installing or servicing. Failure to disconnect power source can result in fire, shock or serious injury.
CAUTION
When servicing the fan, motor may be hot enough to cause pain or injury. Allow motor to cool before servicing.
CAUTION
Precaution should be taken in explosive atmospheres.

DANGER
Pour écarter les risques d'incendie, de choc électrique ou de blessure grave, veiller à toujours débrancher, verrouiller et étiqueter la source de courant avant l'installation ou l'entretien.
ATTENTION
Lors de toute intervention sur la soufflante, le moteur peut être suffisamment chaud pour provoquer une douleur voire une blessure. Laisser le moteur refroidir avant toute maintenance.
ATTENTION
Faire preuve de précaution dans les atmosphères explosives.

Table of Contents

Receiving, Unpacking, Handling, Storage 2
Inspection and Maintenance During Storage 3
Removing from Storage 3
Redesigned BSQ Dimensions Statement 3
Dimensional Data SQ/BSQ 4
Redesigned BSQ Dimensions 5
Mounting SQ/BSQ 6
Mounting Redesigned BSQ 6
Discharge & Isolator Information SQ/BSQ 8
Redesigned Isolator Information BSQ 9
Redesigned Discharge Information BSQ 10
Pre-Starting Checks 10
Operation 11
Inspection 11
Maintenance 12
Tapered Bushing Hub Installation & Removal . . 12
Recommended Bearing Lubrication 13
Parts Lists 14-15
Troubleshooting 16
Our Commitment 16

Receiving

Upon receiving the product check to ensure all items are accounted for by referencing the delivery receipt or packing list. Inspect each crate or carton for shipping damage before accepting delivery. Alert the carrier of any damage detected. The customer will make a notation of damage (or shortage of items) on the delivery receipt and all copies of the bill of lading which is countersigned by the delivering carrier. If damaged, immediately contact your Greenheck Representative. Any physical damage to the unit after acceptance is not the responsibility of Greenheck Fan Corporation.

Unpacking

Verify that all required parts and the correct quantity of each item have been received. If any items are missing, report shortages to your local representative to arrange for obtaining missing parts. Sometimes it is not possible that all items for the unit be shipped together due to availability of transportation and truck space. Confirmation of shipment(s) must be limited to only items on the bill of lading.

Handling

Move fan to desired location and determine position of access panels, discharge and motor. Make sure the inlet and outlet have at least 2½ times the wheel diameter (duct diameter) before any obstructions like an elbow or transition. Attach the fan to a suitable framework as specified; hanging or base vibration isolators are recommended. See the SQ & BSQ Fan Dimensions table on pages 4 and 5 for physical dimensions, utilizing Figures 1 and 2. Mounting dimensions and vibration isolator centerline information is provided on pages 6 thru 9. The motor's amperage and voltage ratings must be checked for compatibility to supply voltage prior to final electrical connection. Electrical lead-in wires are then connected to the factory supplied safety disconnect switch. All wiring must conform to local and national codes.

Fan Storage

Fans are protected against damage during shipment. If the unit cannot be installed and operated immediately, precautions need to be taken to prevent deterioration of the unit during storage. The user assumes responsibility of the fan and accessories while in storage. The manufacturer will not be responsible for damage during storage. These suggestions are provided solely as a convenience to the user.

Indoor Storage: The ideal environment for the storage of fans and accessories is indoors, above grade, in a low humidity atmosphere which is sealed to prevent the entry of blowing dust, rain or snow. Temperatures should be evenly maintained between 30° to 110°F *(-1° to 43°C)* (wide temperature swings may cause condensation and "sweating" of metal parts). All accessories must be stored indoors in a clean, dry atmosphere.

Remove any accumulations of dirt, water, ice or snow and wipe dry before moving to indoor storage. To avoid "sweating" of metal parts allow cold parts to reach room temperature. To dry parts and packages, use a portable electric heater to get rid of any moisture buildup. Leave coverings loose to permit air circulation and to allow for periodic inspection.

The unit should be stored at least 3½ inches *(89 mm)* off the floor on wooden blocks covered with moisture proof paper or polyethylene sheathing. Aisles between parts and along all walls should be provided to permit air circulation and space for inspection.

Outdoor Storage: Fans designed for outdoor applications may be stored outdoors, if absolutely necessary. Roads or aisles for portable cranes and hauling equipment are needed.
The fan should be placed on a level surface to prevent water from leaking into the fan. The fan should be elevated on an adequate number of wooden blocks so that it is above water and snow levels and has enough blocking to prevent it from settling into soft ground. Locate parts far enough apart to permit air circulation, sunlight and space for periodic inspection. To minimize water accumulation, place all fan parts on blocking supports so that rain water will run off.

Do not cover parts with plastic film or tarps as these cause condensation of moisture from the air passing through heating and cooling cycles.

Fan wheels should be blocked to prevent spinning caused by strong winds.

Inspection and Maintenance During Storage

While in storage, inspect fans once per month. Keep a record of inspection and maintenance performed.

If moisture or dirt accumulations are found on parts, the source should be located and eliminated. At each inspection, rotate the wheel by hand ten to fifteen revolutions to distribute lubricant on motor. If paint deterioration begins, consideration should be given to touch-up or repainting. Fans with special coatings may require special techniques for touch-up or repair.

Machined parts coated with rust preventive should be restored to good condition promptly if signs of rust occur. Immediately remove the original rust preventive coating with petroleum solvent and clean with lint-free cloths. Polish any remaining rust from surface with crocus cloth or fine emery paper and oil. Do not destroy the continuity of the surfaces. Thoroughly wipe clean with Tectyl® 506 (Ashland Inc.) or the equivalent. For hard to reach internal surfaces or for occasional use, consider using Tectyl® 511M Rust Preventive, WD-40® or the equivalent.

Removing From Storage

As fans are removed from storage to be installed in their final location, they should be protected and maintained in a similar fashion until the fan equipment goes into operation.

Redesigned BSQ Dimensions

In early 2015, the BSQ was redesigned. The redesign changes some mounting dimensions of the fan for sizes 70 through 240. All BSQ fans ordered after July 20th, 2015 will be moving over to this new design, with two exceptions that will still utilize the old design:

1. Any orders prior to July 20th, 2015.
2. Any orders for OSHPD seismic rated units.

Both versions of the fan have their dimensions listed, so it is recommended dimensions be confirmed on these models before the unit is installed. Contact your local sales representative for clarification on ordering information.

SQ & BSQ Fan Dimensions

Model	A	B	C	*D	E	*F	*G	*H	Damper	SQ Weight^	BSQ Weight^
SQ 60-75	12 *(305)*	13 *(330)*	12 *(305)*	8⅞ *(225)*	1 *(25)*	-	-	-	9 *(229)*	26 *(12)*	-
SQ 80-95	15 *(381)*	16 *(406)*	15 *(381)*	11⅞ *(302)*	1 *(25)*	-	-	-	12 *(305)*	41 *(19)*	-
SQ 97,98,99	15 *(381)*	21 *(533)*	15 *(381)*	11⅞ *(302)*	1 *(25)*	-	-	-	12 *(305)*	49 *(22)*	-
BSQ 70-80	15 *(381)*	21 *(533)*	15 *(381)*	11⅞ *(302)*	1 *(25)*	15½ *(394)*	14 *(356)*	12½ *(318)*	12 *(305)*	-	76 *(34)*
BSQ 90	15 *(381)*	21 *(533)*	15 *(381)*	11⅞ *(302)*	1 *(25)*	15½ *(394)*	14 *(356)*	12½ *(318))*	12 *(305)*	-	84 *(38)*
SQ-BSQ 100	17 *(432)*	21 *(533)*	17 *(432)*	13⅞ *(352)*	1 *(25)*	15½ *(394)*	14 *(356)*	12½ *(318)*	14 *(356)*	56 *(25)*	83 *(38)*
SQ-BSQ 120	19 *(483)*	21 *(533)*	19 *(483)*	15⅞ *(403)*	1 *(25)*	17⅞ *(454)*	16 *(406)*	12½*(318)*	16 *(406)*	67 *(30)*	97 *(44)*
SQ-BSQ 130 (HP)	21 *(533)*	21 *(533)*	21 *(533)*	17⅞ *(454)*	1 *(25)*	17⅞ *(454)*	16 *(406)*	12½ *(318)*	18 *(457)*	67 *(35)*	97 *(44)*
SQ-BSQ 140 (HP)	23 *(584)*	22 *(559)*	23 *(584)*	19⅞ *(505)*	1 *(25)*	17⅞ *(454)*	16 *(406)*	12½ *(318)*	20 *(508)*	104 *(47)*	111 *(50)*
SQ-BSQ 160 (HP)	26 *(660)*	26 *(660)*	26 *(660)*	22⅞ *(581)*	1 *(25)*	20½ *(521)*	17 *(432)*	13⅞ *(340)*	23 *(584)*	160 *(73)*	208 *(94)*
BSQ 180 (HP)	28 *(711)*	28 *(711)*	28 *(711)*	23⅞ *(606)*	1½ *(38)*	24⅜ *(619)*	18 *(457)*	13¾ *(349)*	24 *(610)*	26 *(12)*	245 *(111)*
BSQ 200 (HP)	32 *(813)*	32 *(813)*	32 *(813)*	27⅞ *(708)*	1½ *(38)*	28 *(711)*	20 *(508)*	16 *(406)*	28 *(711)*	26 *(12)*	314 *(142*
BSQ 240 (HP)	39 *(991)*	34 *(864)*	39 *(991)*	34⅞ *(886)*	1½ *(38)*	32⅞ *(835)*	22 *(559)*	19 *(483)*	35 *(889)*	26 *(12)*	415 *(188)*
BSQ 300 (HP)	46 *(1168)*	38 *(965)*	46 *(1168)*	41⅞ *(1064)*	1½ *(38)*	34 *(864)*	22 *(559)*	18 *(457)*	42 *(1067)*	26 *(12)*	537 *(244)*
BSQ 360 (HP)	52 *(1321)*	42 *(1067)*	52 *(1321)*	47⅞ *(1216)*	1½ *(38)*	34 *(864)*	22 *(559)*	18 *(457)*	48 *(1219)*	26 *(12)*	686 *(311)*
BSQ 420 (HP)	58 *(1473)*	50 *(1270)*	58 *(1473)*	53⅞ *(1368)*	1½ *(38)*	34 *(864)*	22 *(559)*	18 *(457))*	54 *(1372)*	26 *(12)*	789 *(358)*

All dimensions in inches *(millimeters)* and weight is shown in pounds *(kilograms)*. *May be greater depending on motor.
^Weight shown is largest cataloged Open Drip Proof motor.

Filter Option Dimensions

Model	A	B	C	D	WT.	Filter Size	Filter Quantity
SQ 60-75	22⅛ *(562)*	12 *(305)*	8⅞ *(225)*	1 *(25)*	40 *(18)*	10 x 12 *(254 x 305)*	1
SQ 80-95	45⅝ *(1159)*	15 *(381)*	11⅞ *(302)*	1 *(25)*	74 *(34)*	14 x 25 *(356 x 635)*	1
SQ 97,98,99	50⅝ *(1286)*	15 *(381)*	11⅞ *(302)*	1 *(25)*	80 *(36)*	14 X 25 *(356 X 635)*	1
SQ 100	47¼ *(1200)*	17 *(432)*	13⅞ *(352)*	1 *(25)*	88 *(40)*	16 x 20 *(406 x 508)*	2
SQ 120	52³⁄₁₆ *(1326)*	19 *(483)*	15⅞ *(403)*	1 *(25)*	114 *(52)*	16 x 25 *(406 x 635)*	2
SQ 130	46⅜ *(1178)*	21 *(533)*	17⅞ *(454)*	1 *(25)*	120 *(54)*	20 x 20 *(508 x 508)*	2
SQ 140	52⅜ *(1330)*	23 *(584)*	19⅞ *(505)*	1 *(25)*	174 *(79)*	20 x 25 *(508 x 635)*	2
SQ 160	51⅜ *(1305)*	26 *(660)*	22⅞ *(581)*	1 *(25)*	246 *(112)*	20 x 20 *(508 x 508)*	4
BSQ 70-80-90	50⅝ *(1286)*	15 *(381)*	11⅞ *(302)*	1 *(25)*	117 *(53)*	14 x 25 *(356 x 635)*	1
BSQ 100	47¼ *(1200)*	17 *(432)*	13⅞ *(352)*	1 *(25)*	120 *(54)*	16 x 20 *(406 x 508)*	2
BSQ 120	52³⁄₁₆ *(1326)*	19 *(483)*	15⅞ *(403)*	1 *(25)*	144 *(79)*	16 x 25 *(406 x 635)*	2
BSQ 130 (HP)	46⅜ *(1178)*	21 *(533)*	17⅞ *(454)*	1 *(25)*	140 *(64)*	20 x 20 *(508 x 508)*	2
BSQ 140 (HP)	52⅜ *(1330)*	23 *(584)*	19⅞ *(505)*	1 *(25)*	181 *(82)*	20 x 25 *(508 x 635)*	2
BSQ 160 (HP)	51⅜ *(1305)*	26 *(660)*	22⅞ *(581)*	1 *(25)*	294 *(133)*	20 x 20 *(508 x 508)*	4
BSQ 180 (HP)	55¹⁄₁₆ *(1399)*	28 *(711)*	23⅞ *(606)*	1½ *(38)*	344 *(156)*	20 x 25 *(508 x 635)*	4
BSQ 200 (HP)	66¹¹⁄₁₆ *(1694)*	32 *(813)*	27⅞ *(708)*	1½ *(38)*	441 *(200)*	12 x 25 *(305 x 635)*	3
						16 x 25 *(406 x 635)*	3
BSQ 240 (HP)	68⅞ *(1749)*	39 *(991)*	34⅞ *(886)*	1½ *(38)*	573 *(260)*	20 x 25 *(508 x 635)*	4
						16 x 25 *(406 x 635)*	4
BSQ 300 (HP)	72⅛ *(1832)*	46 *(1168)*	41⅞ *(1064)*	1½ *(38)*	759 *(344)*	20 x 25 *(508 x 635)*	8
BSQ 360 (HP)	79¼ *(2013)*	52 *(1321)*	47⅞ *(1216)*	1½ *(38)*	957 *(434)*	16 x 25 *(406 x 635)*	10
						20 x 25 *(508 x 635)*	5
BSQ 420	93⅛ *(2365)*	58 *(1473)*	53⅞ *(1368)*	1½ *(38)*	1185 *(538)*	16 x 25 *(406 x 635)*	5
						20 x 25 *(508 x 635)*	10

Note: 24-inch side clearance is recommended for accessing and removing filters.
All dimensions in inches *(millimeters)* and weight (WT.) in pounds *(kilograms)*.

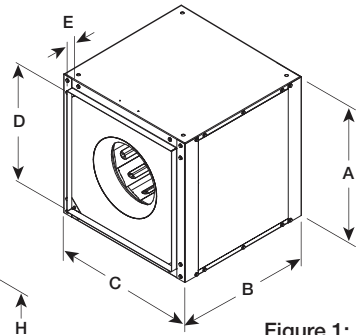

Figure 1:
SQ Dimensions

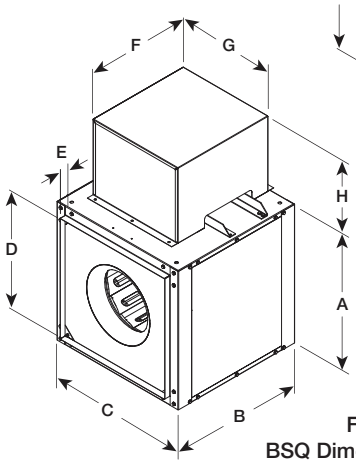

Figure 2:
BSQ Dimensions

Figure 3: Model SQ - Filter Options

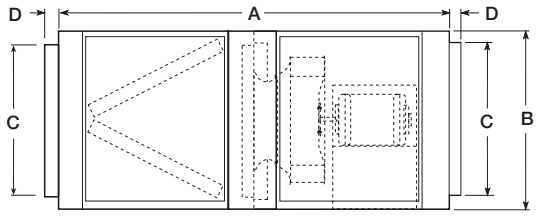

Figure 4: Model BSQ - Filter Options

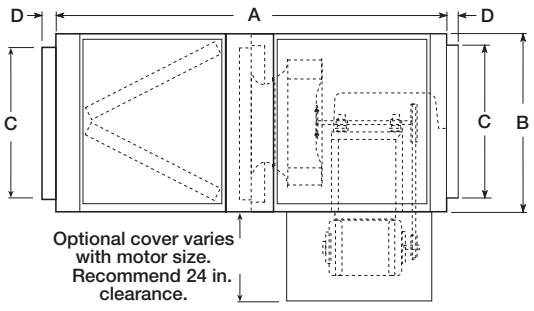

Redesigned BSQ Dimensions (refer to page 3 for details)

BSQ Fan Dimensions

Model	A	B	C	*D	E	*F	*G	*H	Damper	BSQ Weight^
BSQ 70-90	17⅛ *(435)*	21 *(533)*	17⅛ *(435)*	11⅞ *(302)*	1½ *(37)*	17¾ *(451)*	13 *(330)*	13¼ *(337)*	12 *(305)*	106 *(48)*
BSQ 100	17⅛ *(435)*	21 *(533)*	17⅛ *(435)*	13⅞ *(352)*	1½ *(37)*	17¾ *(451)*	13 *(330)*	13¼ *(337)*	14 *(356)*	107 *(48)*
BSQ 120	19⅛ *(486)*	21 *(533)*	19⅛ *(486)*	15⅞ *(403)*	1½ *(37)*	20 *(508)*	17 *(432)*	13¼ *(337)*	16 *(406)*	124*(56)*
BSQ 130 (HP)	21⅛ *(537)*	21 *(533)*	21⅛ *(537)*	17⅞ *(454)*	1½ *(37)*	20 *(508)*	17 *(432)*	13¼ *(337)*	18 *(457)*	131 *(59)*
BSQ 140 (HP)	23⅛ *(587)*	22 *(559)*	23⅛ *(587)*	19⅞ *(505)*	1½ *(37)*	20 *(508)*	17 *(432)*	13¼ *(337)*	20 *(508)*	146 *(66)*
BSQ 160 (HP)	26⅛ *(664)*	26 *(660)*	26⅛ *(664)*	22⅞ *(581)*	1½ *(37)*	20 *(508)*	17 *(432)*	13¼ *(337)*	23 *(584)*	188 *(85)*
BSQ 180 (HP)	27⅛ *(689)*	28 *(711)*	27⅛ *(689)*	23⅞ *(606)*	1½ *(37)*	20 *(508)*	17 *(432)*	13¼ *(337)*	24 *(610)*	195 *(88)*
BSQ 200 (HP)	31⅛ *(791)*	32 *(813)*	31⅛ *(791)*	27⅞ *(708)*	1½ *(37)*	30 *(762)*	20 *(508)*	16 *(406)*	28 *(711)*	246 *(111)*
BSQ 240 (HP)	38⅛ *(968)*	34 *(864)*	38⅛ *(968)*	34⅞ *(886)*	1½ *(37)*	30 *(762)*	20 *(508)*	16 *(406)*	35 *(889)*	350 *(159)*

All dimensions in inches *(millimeters)* and weight is shown in pounds *(kilograms)*. *May be greater depending on motor.
^Weight shown is largest cataloged Open Drip Proof motor.

Filter Option Dimensions

Model	A	B	C	D	WT.	Filter Size	Filter Quantity
BSQ 70-80-90	53⅝ *(1368)*	17⅛ *(435)*	11⅞ *(302)*	1½ *(37)*	168 *(76)*	16 x 20 *(406 x 508)*	2
BSQ 100	53⅝ *(1368)*	17⅛ *(435)*	13⅞ *(352)*	1½ *(37)*	169 *(77)*	16 x 20 *(406 x 508)*	2
BSQ 120	58¾ *(1492)*	19⅛ *(486)*	15⅞ *(403)*	1½ *(37)*	194 *(88)*	16 x 25 *(406 x 635)*	2
BSQ 130 (HP)	53¼ *(1353)*	21⅛ *(537)*	17⅞ *(454)*	1½ *(37)*	197 *(89)*	20 x 20 *(508 x 508)*	2
BSQ 140 (HP)	59 *(1500)*	23⅛ *(537)*	19⅞ *(505)*	1½ *(37)*	231 *(105)*	20 x 25 *(508 x 635)*	2
BSQ 160 (HP)	58¾ *(1492)*	26⅛ *(664)*	22⅞ *(581)*	1½ *(37)*	285 *(129)*	20 x 20 *(508 x 508)*	4
BSQ 180 (HP)	60¾ *(1543)*	27⅛ *(689)*	23⅞ *(606)*	1½ *(37)*	293 *(133)*	20 x 25 *(508 x 635)*	4
BSQ 200 (HP)	69⅜ *(1762)*	31⅛ *(791)*	27⅞ *(708)*	1½ *(37)*	361 *(164)*	12 x 25 *(305 x 635)*	3
						16 x 25 *(406 x 635)*	3
BSQ 240 (HP)	71½ *(1816)*	38⅛ *(968)*	34⅞ *(886)*	1½ *(37)*	496 *(225)*	20 x 25 *(508 x 635)*	4
						16 x 25 *(406 x 635)*	4

Note: 24-inch side clearance is recommended for accessing and removing filters.
All dimensions in inches *(millimeters)* and weight (WT.) in pounds *(kilograms)*.

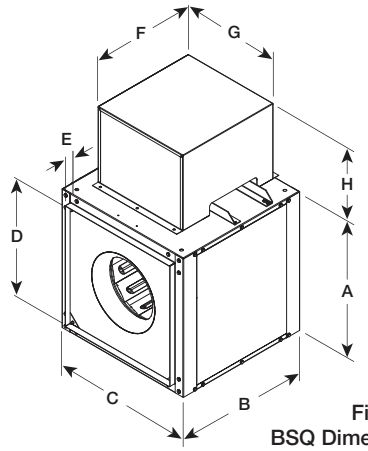

Figure 2:
BSQ Dimensions

Figure 4: Model BSQ - Filter Options

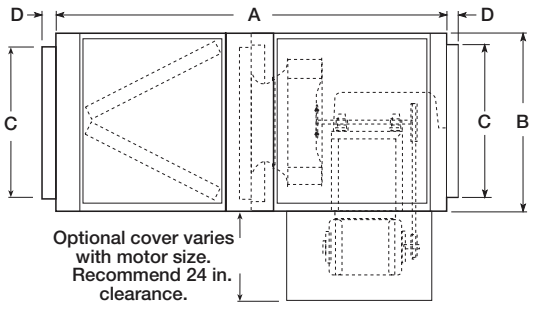

Mounting: SQ /BSQ

All SQ and BSQ fan models can be mounted horizontally, vertically or at an angle. For ease of installation, knockouts are provided at each location where mounting brackets are shown in Figures 5, 6 and 7. Optional brackets are universally adjustable to mount in any of these locations.

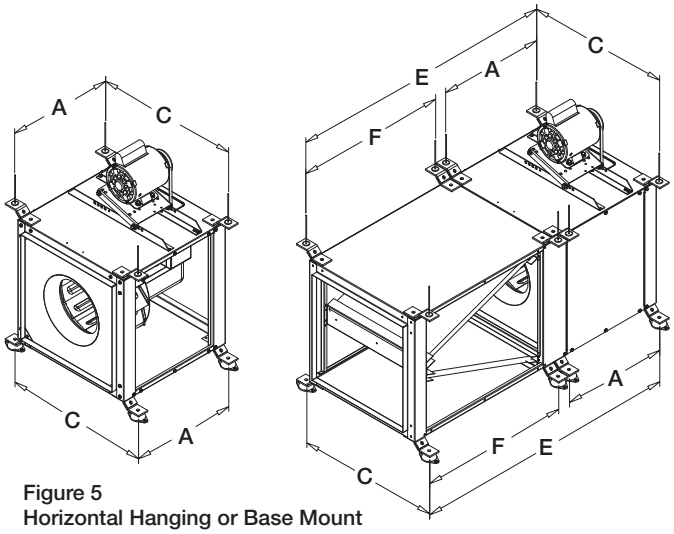

Figure 5
Horizontal Hanging or Base Mount

With either a hanging or base mount the motor may be located on either side. The base mount allows top access panels only.

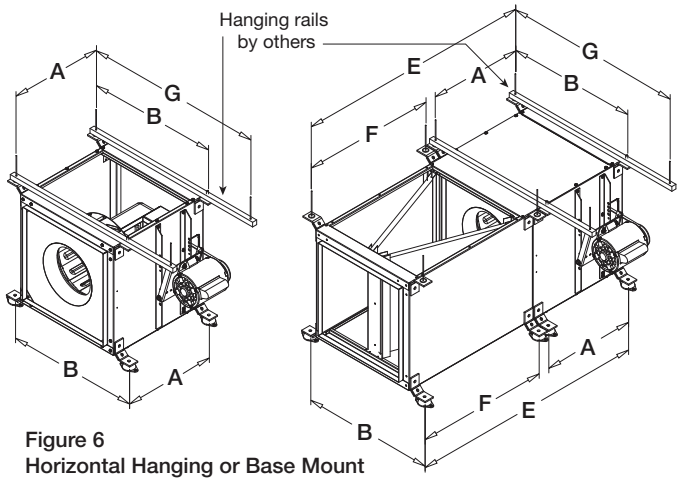

Figure 6
Horizontal Hanging or Base Mount

With a hanging mount, the motor may be located on either top or bottom. The base mount allows top motor location only. Both options provide access panels on two sides.

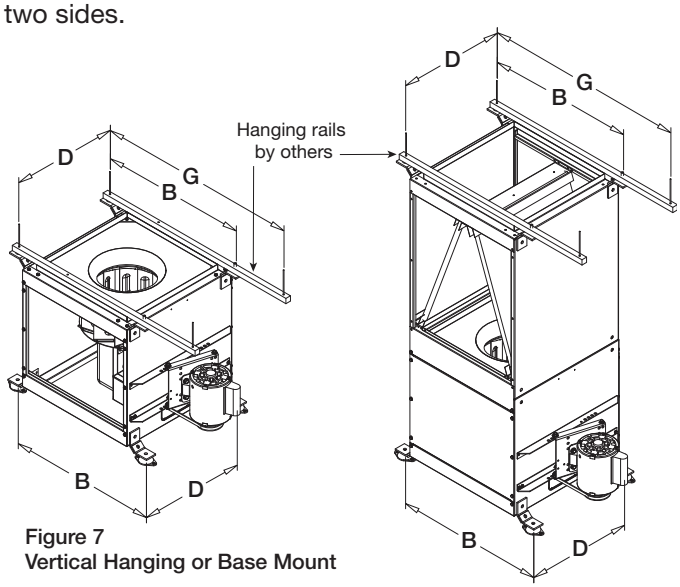

Figure 7
Vertical Hanging or Base Mount

Mounting brackets are turned 90° for vertical mounting. Access panels are located on the two sides adjacent to the motor.

Mounting Dimensional Data

Model	A	B	C	D	E	F	G
SQ 60-75	10⅝ *(269)*	16¾ *(424)*	14⅝ *(372)*	8⅞ *(225)*	19⅞ *(504)*	6⅞ *(176)*	Hanging rails not included. Supplied by others.
SQ 80-95	13¼ *(338)*	19¾ *(500)*	15⅛ *(384)*	9⅜ *(238)*	43 *(1093)*	27⅜ *(695)*	
SQ 97,98,99	18⅝ *(473)*	19¾ *(500)*	15⅛ *(384)*	9⅜ *(238)*	48⅜ *(1228)*	27⅜ *(695)*	
BSQ 70-90	18⅝ *(473)*	19¾ *(500)*	17⅝ *(448)*	11⅞ *(301)*	48⅜ *(1228)*	27⅜ *(695)*	
SQ-BSQ 100	18⅝ *(473)*	21¾ *(551)*	19⅝ *(499)*	13⅞ *(352)*	43¾ *(1112)*	22¾ *(579)*	
SQ-BSQ 120	18⅝ *(473)*	23¾ *(602)*	21⅝ *(549)*	15⅞ *(403)*	49⅛ *(1247)*	28⅛ *(715)*	
SQ-BSQ 130	18⅝ *(473)*	25¾ *(653)*	23⅝ *(600)*	17⅞ *(454)*	44 *(1118)*	23 *(585)*	
SQ-BSQ 140	19⅝ *(498)*	27¾ *(704)*	25⅝ *(651)*	19⅞ *(505)*	50 *(1271)*	28 *(713)*	
SQ-BSQ 160	23½ *(596)*	31 *(789)*	28¾ *(730)*	22⅞ *(581)*	49½ *(1257)*	23⅝ *(601)*	Hanging rails not included. Supplied by others.
BSQ 180	25½ *(646)*	33 *(840)*	28⅝ *(727)*	22¾ *(578)*	52⅝ *(1336)*	24½ *(623)*	
BSQ 200	29¼ *(742)*	37 *(941)*	32¾ *(832)*	26⅞ *(683)*	64⅛ *(1629)*	32¼ *(818)*	
BSQ 240	31⅝ *(803)*	44 *(1119)*	39¾ *(1010)*	33⅞ *(860)*	66½ *(1689)*	32⅛ *(816)*	
BSQ 300	35 *(889)*	51 *(1297)*	46¾ *(1188)*	40⅞ *(1038)*	69⅛ *(1755)*	31⅜ *(797)*	
BSQ 360	39⅜ *(1000)*	57 *(1449)*	52⅝ *(1337)*	46¾ *(1187)*	76⅝ *(1948)*	34¾ *(881)*	
BSQ 420	47 *(1195)*	63 *(1602)*	58⅝ *(1488)*	52¾ *(1338)*	90¼ *(2292)*	40⅝ *(1031)*	

All dimensions in inches *(millimeters)*.

Redesigned BSQ Dimensions

Mounting: BSQ

All BSQ fan models can be mounted horizontally, vertically or at an angle. For ease of installation, knockouts are provided at each location where mounting brackets are shown in Figures 5, 6 and 7. Optional brackets are universally adjustable to mount in any of these locations.

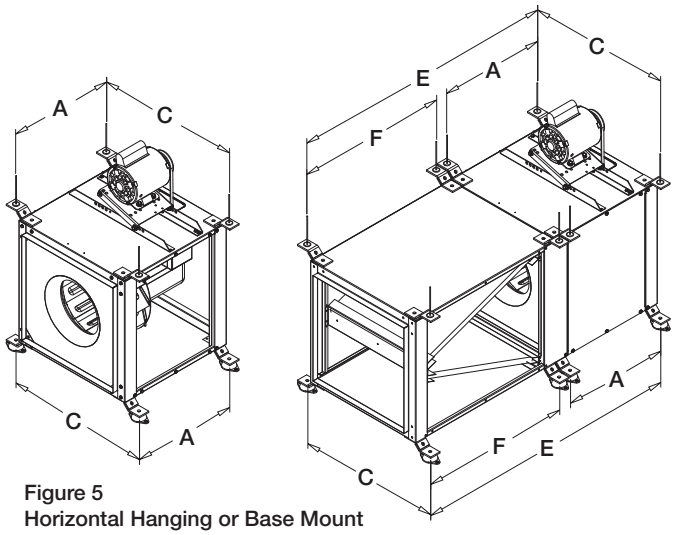

Figure 5
Horizontal Hanging or Base Mount

With either a hanging or base mount the motor may be located on either side. The base mount allows top access panels only.

NOTE

Flex duct is recommended for mounting to the inlet of the fan to allow for fitting adjustments.

If the inlet venturi requires adjustment, it can be detached from the unit via the fasteners located on the inlet panel.

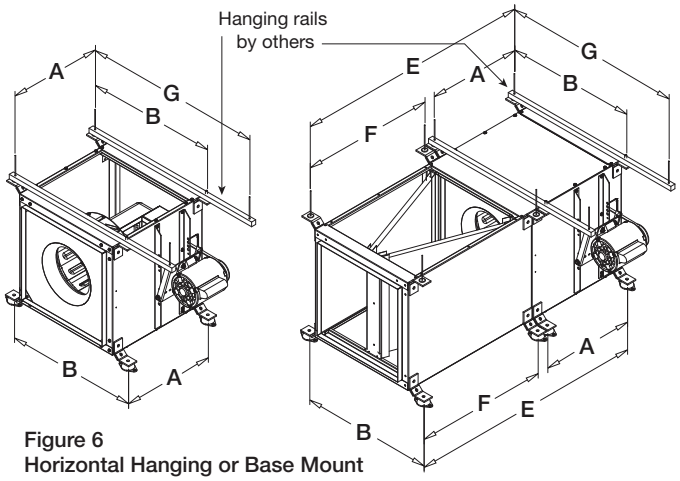

Figure 6
Horizontal Hanging or Base Mount

With a hanging mount, the motor may be located on either top or bottom. The base mount allows top motor location only. Both options provide access panels on two sides.

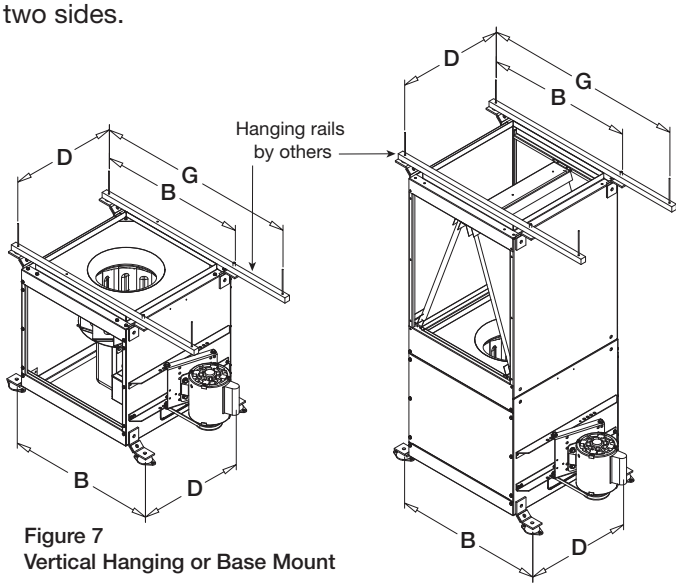

Figure 7
Vertical Hanging or Base Mount

Mounting brackets are turned 90° for vertical mounting. Access panels are located on the two sides adjacent to the motor.

Mounting Dimensional Data							
Model	A	B	C	D	E	F	G
BSQ 70-100	18 *(457)*	21 13/16 *(554)*	19 14/16 *(505)*	14 1/8 *(359)*	50 14/16 *(1292)*	29 14/16 *(758)*	Hanging rails not included. Supplied by others.
BSQ 120	18 *(457)*	23 13/16 *(605)*	21 14/16 *(556)*	16 1/8 *(410)*	55 3/4 *(1416)*	34 3/4 *(883)*	
BSQ 130	18 *(457)*	25 13/16 *(656)*	23 14/16 *(607)*	18 1/8 *(460)*	50 1/4 *(1276)*	29 1/4 *(743)*	
BSQ 140	19 *(483)*	27 13/16 *(707)*	25 14/16 *(657)*	20 1/8 *(511)*	56 *(1424)*	34 *(865)*	
BSQ 160	23 *(584)*	31 3/16 *(792)*	29 *(737)*	23 1/8 *(587)*	55 3/4 *(1416)*	29 3/4 *(756)*	Hanging rails not included. Supplied by others.
BSQ 180	25 *(635)*	32 3/16 *(817)*	30 *(762)*	24 1/8 *(613)*	57 3/4 *(1467)*	29 3/4 *(756)*	
BSQ 200	29 *(737)*	36 3/16 *(919)*	34 *(864)*	28 1/8 *(714)*	66 3/8 *(1686)*	34 3/8 *(873)*	
BSQ 240	31 *(787)*	43 3/16 *(1097)*	41 *(1042)*	35 1/8 *(892)*	68 1/2 *(1740)*	34 1/2 *(876)*	

All dimensions in inches *(millimeters)*.

Duct Length: The inlet and outlet duct length should be approximately two to three wheel diameters long before and after the fan to achieve cataloged performance.

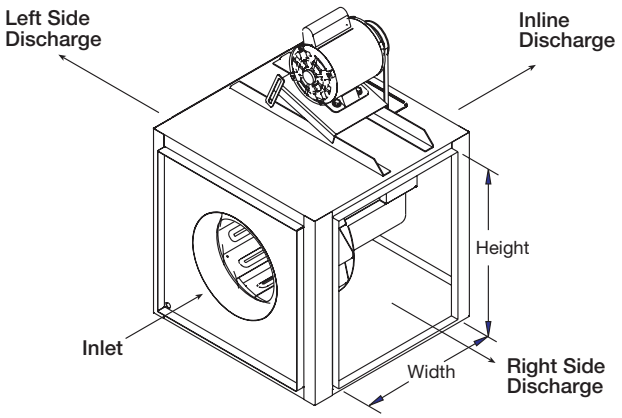

Figure 8

Side Discharge: Make sure discharge is orientated in the same direction as originally ordered, performance will change with different discharge positions. Refer to Figure 8 for proper side discharge definition and the Side Discharge chart for dimensions. Refer to the CAPS program or consult factory for performance corrections.

Side Discharge Duct Openings		
Unit Size	Width	Height
BSQ 70-80-90	11⅞ *(302)*	11⅞ *(302)*
SQ 60-75	9⅞ *(251)*	8⅞ *(225)*
SQ 80-95	12⅞ *(327)*	11⅞ *(302)*
SQ 97-98-99	13⅞ *(352)*	11⅞ *(302)*
SQ 100/BSQ 100	13⅞ *(352)*	13⅞ *(352)*
SQ 120/BSQ 120	15⅞ *(403)*	15⅞ *(403)*
SQ 130/BSQ 130 (HP)	17⅞ *(454)*	17⅞ *(454)*
SQ 140/BSQ 140 (HP)	19⅞ *(505)*	19⅞ *(505)*
SQ 160/BSQ 160 (HP)	22⅞ *(581)*	22⅞ *(581)*
BSQ 180 (HP)	23⅞ *(606)*	23⅞ *(606)*
BSQ 200 (HP)	27⅞ *(708)*	27⅞ *(708)*
BSQ 240 (HP)	28⅞ *(733)*	34⅞ *(886)*
BSQ 300 (HP)	31⅞ *(810)*	41⅞ *(1064)*
BSQ 360 (HP)	32⅞ *(835)*	37⅞ *(962)*
BSQ 420	34⅞ *(886)*	43⅞ *(1114)*

All dimensions in inches *(millimeters)*.

Hanging Spring Isolator

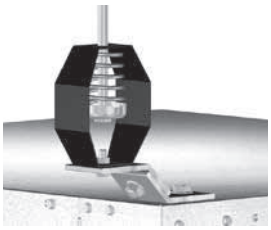

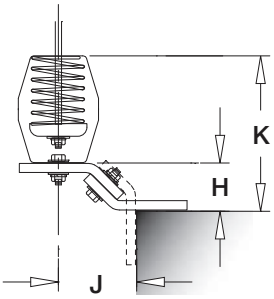

Hanging Neoprene Isolator

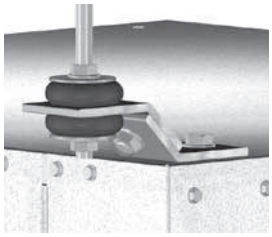

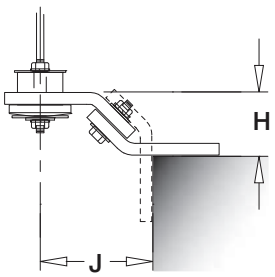

Standing Neoprene Isolator



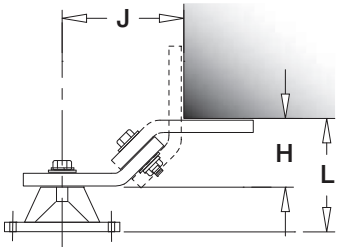

Standing Spring Isolator



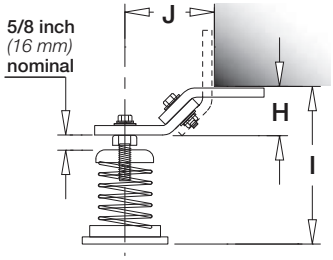

Isolator Dimensional Data					
Model	H	I	J	K	L
SQ 60-75 SQ 80-95 SQ 97-99 BSQ 70-90 SQ-BSQ 100 SQ-BSQ 120 SQ-BSQ 130 SQ-BSQ 140	1⅜ *(35)*	5½ *(140)*	2 *(51)*	6¾ *(171)*	2⁵⁄₁₆ *(59)*
SQ-BSQ 160 BSQ 180 BSQ 200 BSQ 240 BSQ 300 BSQ 360 BSQ 420	1⅜ *(35)*	5½ *(140)*	2 *(51)*	6¾ *(171)*	2⅝ *(67)*

All dimensions in inches *(millimeters)*.

Redesigned BSQ Dimensions

Hanging Spring Isolator

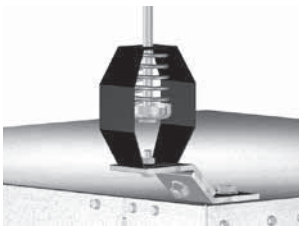

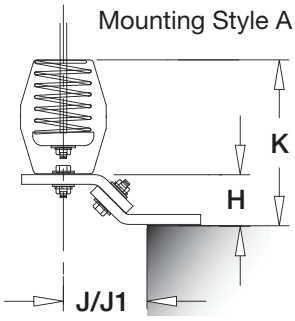

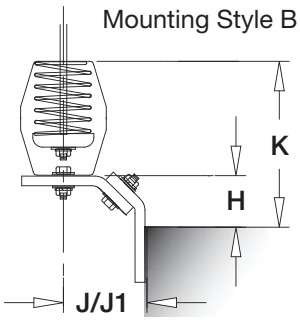

Hanging Neoprene Isolator

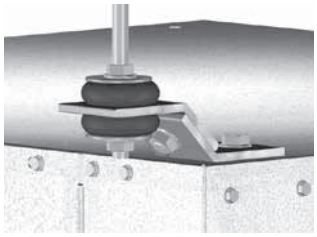

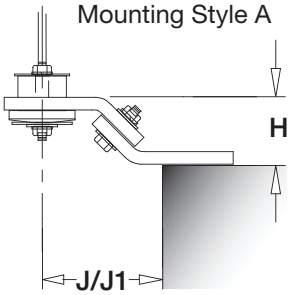

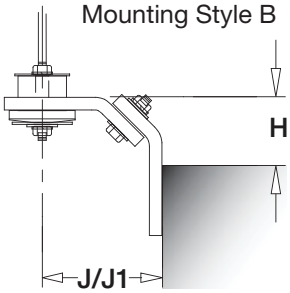

Standing Spring Isolator



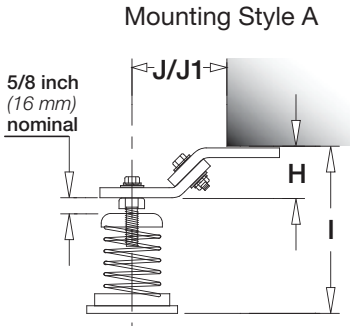

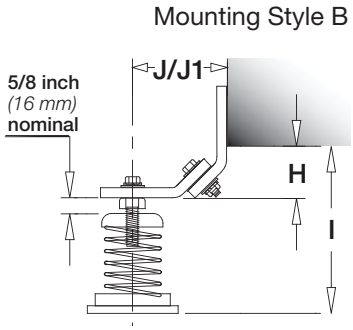

Standing Neoprene Isolator



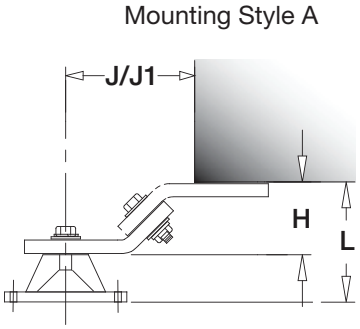

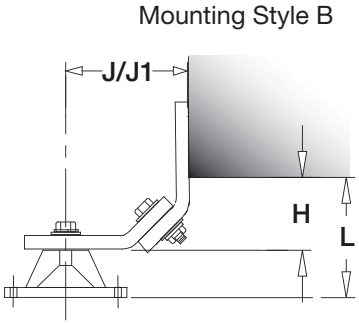

Isolator Dimensional Data						
Model	H	I	J*	J1**	K	L
BSQ 70-90 BSQ 100 BSQ 120 BSQ 130 BSQ 140	1⅜ *(35)*	5½ *(140)*	1⅜ *(35)*	2⅜ *(60)*	6¾ *(171)*	2⅓ *(59)*
BSQ 160 BSQ 180 BSQ 200 BSQ 240	1⅜ *(35)*	5½ *(140)*	1⅜ *(35)*	2½ *(64)*	6¾ *(171)*	2⅝ *(67)*

All dimensions in inches *(millimeters)*.

*Use dimension J while utilizing Mounting Style A

**Use dimension J1 while utilizing Mounting Style B

Redesigned BSQ Dimensions

Duct Length: The inlet and outlet duct length should be approximately two to three wheel diameters long before and after the fan to achieve cataloged performance.

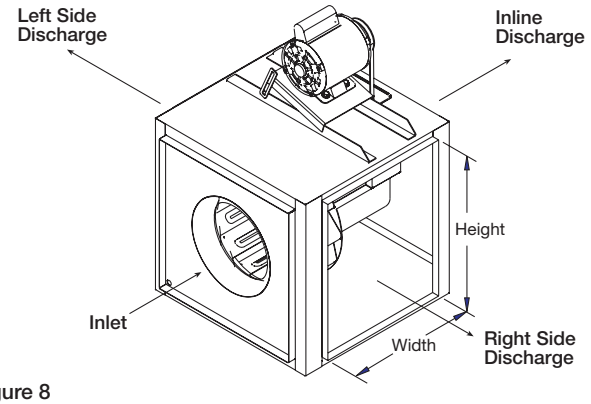

Figure 8

Side Discharge: Make sure discharge is orientated in the same direction as originally ordered, performance will change with different discharge positions. Refer to Figure 8 for proper side discharge definition and the Side Discharge chart for dimensions. Refer to the CAPS program or consult factory for performance corrections.

Side Discharge Duct Openings		
Unit Size	Width	Height
BSQ 70-100	12½ *(317)*	13⅞ *(352)*
BSQ 120	12½ *(317)*	15⅞ *(403)*
BSQ 130 (HP)	12½ *(317)*	17⅞ *(454)*
BSQ 140 (HP)	13½ *(342)*	19⅞ *(505)*
BSQ 160 (HP)	17½ *(444)*	22⅞ *(581)*
BSQ 180 (HP)	19½ *(494)*	23⅞ *(606)*
BSQ 200 (HP)	23½ *(596)*	27⅞ *(708)*
BSQ 240 (HP)	25½ *(647)*	34⅞ *(886)*

All dimensions in inches *(millimeters)*.

Pre Start-Up Checks

1. **Check all fasteners for tightness.** The wheel should rotate freely and be aligned as shown in Figure 9. Wheel position is preset and the unit is tested at the factory. Movement may occur during shipment, and realignment may be necessary. Centering can be accomplished by loosening the bolts holding the inlet (venturi) panel and repositioning. Wheel and inlet cone overlap can be adjusted by loosening the setscrews in the wheel and moving the wheel to the desired position.

Wheel Overlap Dimensions

Model	G - Overlap in. *(mm)*	H - Gap in. *(mm)*
SQ 60-95	-	1/8 *(3)*
SQ 100-160	1/4 *(6)*	-
BSQ 70-160	1/4 *(6)*	-
BSQ 180-240	3/8 *(10)*	-
BSQ 300-420	1/2 *(13)*	-
SQ 97-98-99	1/4 *(6)*	-

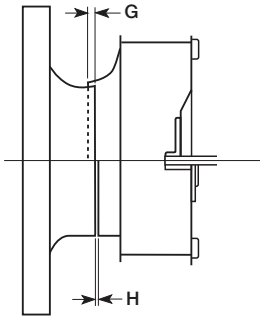

Figure 9

2. **Wheel Rotation:** Direction of wheel rotation is critical. Reversed rotation will result in poor air performance, motor overloading and possible burnout. Check wheel rotation by momentarily energizing the unit (all SQ and BSQ fans have clockwise wheel rotation when viewed from top of fan). Rotation should be clockwise as shown in Figure 10 and correspond to the rotation decal on the unit.

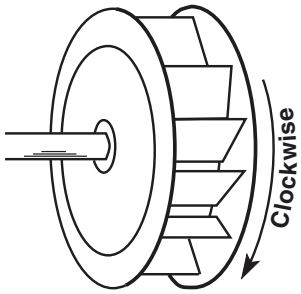

Figure 10

WARNING

Correct direction of wheel rotation is critical. Reversed rotation will result in poor air performance, motor overloading and possible burnout.

AVERTISSEMENT

La turbine doit impérativement tourner dans le bon sens. Une rotation en sens inverse entraînerait de mauvaises performances de soufflage, une surcharge du moteur voire un grillage du moteur.

3. **Vibration Isolators:** After fan is moved to desired location, punch out the four knockout holes which are located on the unit top and bottom panels. Assemble the brackets to the unit according to the appropriate drawings on pages 8 and 9 and refer to respective parts list on page 15. Make certain all connectors are tight and that all washers are in.
4. **For BSQ Fans:** If adjustments are made, it is very important to check the pulleys for proper alignment. Misaligned pulleys lead to excessive belt wear, vibration, noise, and power loss. (see Figure 11 on next page).

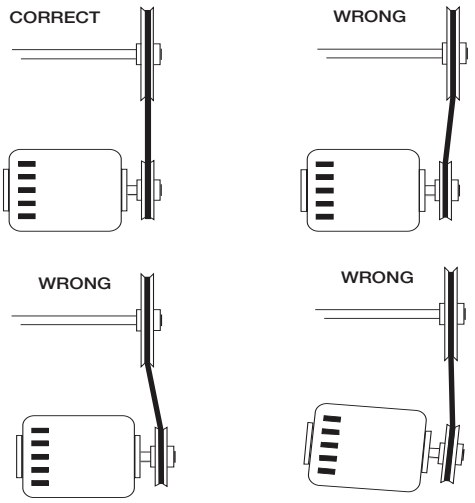

Figure 11

5. **For BSQ Fans:** Belt tension can be adjusted by loosening four fasteners marked “R” on the drive frame. (refer to Figure 13). The motor plate slides on the slotted adjusting arms. Belt tension should be adjusted to allow 1/64 inch of deflection per inch of belt span. For example, a 15 inch belt span should have 15/64 inch (or about 1/4 inch) of deflection with moderate thumb pressure at mid-point between pulleys (see Figure 12). Over-tightening will cause excessive bearing wear and noise. Too little tension will cause slippage at start-up and uneven wear.

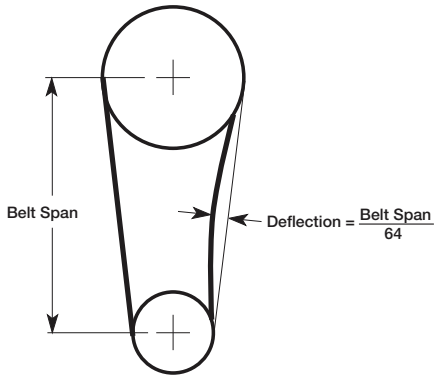

Figure 12

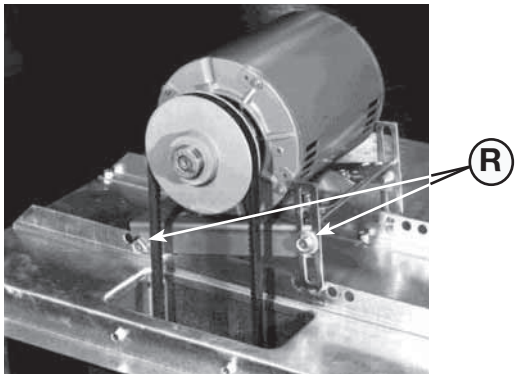

NOTE: Identical fasteners on opposing side must also be loosened.

Figure 13

6. The adjustable motor pulley is factory set for the RPM specified. Speed can be increased by closing or decreased by opening the adjustable motor sheave. Two groove variable pitch pulleys must be adjusted an equal number of turns open or closed. Any increase in speed represents a substantial increase in the horsepower required by a unit. Motor amperage should always be checked to avoid serious damage to the motor when speed is varied.

IMPORTANT

The fan has been checked for mechanical noises at the factory prior to shipment. If mechanical noise should develop, suggested corrective actions are offered in the Troubleshooting section.

IMPORTANT

Over-tightening will cause excessive bearing wear and noise. Too little tension will cause slippage at start-up and uneven wear.

IMPORTANT

Adjust (tighten) belt tension after the first 24-48 hours of operation.

Operation: SQ / BSQ

1. Before starting up or operating fan, check all fasteners for tightness. In particular, check the setscrews in wheel hub (and pulleys, if applicable).
2. While in the OFF position or before connecting the fan to power, turn the fan wheel by hand to be sure it is not striking the venturi or any obstacle.
3. Start the fan and shut it off immediately to check rotation of the wheel with directional arrow in the motor compartment, see Figure 10.
4. When the fan is started, observe the operation and check for any unusual noises.
5. With the system in full operation and all ductwork attached, measure current input to the motor and compare with the nameplate rating to determine if the motor is operating under safe load conditions.
6. Keep inlets and approaches to fan clean and free from obstruction.

Inspection: SQ / BSQ

Inspection of the fan should be conducted at the first 30 minute and 24 hour intervals of satisfactory operation.

30 Minute Interval

Inspect bolts, setscrews and motor mounting bolts. Adjust and tighten as necessary.

24 Hour Interval

Check all internal components. On BSQ unit only, inspect belt alignment and tension. Adjust and tighten as necessary.

Maintenance: SQ / BSQ

Installation and maintenance are to be performed only by qualified personnel who are familiar with local codes and regulations and who are experienced with this type of equipment.

Motor maintenance is generally limited to cleaning and lubrication (where applicable). Cleaning should be limited to exterior surfaces only. Removing dust buildup on motor housing ensures proper motor cooling.

Greasing of motors is only intended when fittings are provided. Many fractional horsepower motors are permanently lubricated and should not be lubricated after installation. Motors supplied with grease fittings should be greased in accordance with manufacturers' recommendations. Where motor temperatures do not exceed 104ºF *(40ºC)*, the grease should be replaced after 2,000 hours of running time as a general rule.

Wheels require very little attention when moving clean air. Occasionally, oil and dust may accumulate causing imbalance. When this occurs the wheel and housing should be cleaned to ensure smooth and safe operation.

All fasteners should be checked for tightness each time maintenance checks are performed prior to restarting unit.

A proper maintenance program will help these units deliver years of dependable service.

DANGER

Always disconnect, lock and tag power source before servicing. Failure to disconnect power source can result in fire, shock or serious injury.

DANGER

Pour écarter les risques d'incendie, de choc électrique ou de blessure grave, veiller à toujours débrancher, verrouiller et étiqueter la source de courant avant l'installation ou l'entretien.

IMPORTANT

Uneven cleaning of the wheel will produce an out of balance condition that will cause vibration in the fan.

WARNING

This unit should be made non-functional when cleaning the wheel or housing (fuses removed, disconnect locked off).

WARNING

L'appareil doit être rendu non opérationnel lors du nettoyage de la turbine ou du caisson (fusibles retirés, sectionneur verrouillé).

Tapered Bushing Hub Installation and Removal

For wheel hubs and shaft pulleys utilizing a tapered bushing interface, follow this procedure for installation and removal. There are two possible set ups for the tapered bushing, both have the same procedure, but orientation of the hub varies.

Tapered Bushing Removal:

1. If present, loosen the setscrew holding the bushing and shaft key in place.
2. Loosen and remove the socket head cap screws which fasten the bushing to the hub as shown in the section views and examples of Figures 14-17.

Standard Mounting	Reverse Mounting
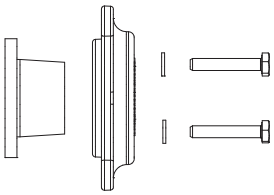 Figure 14	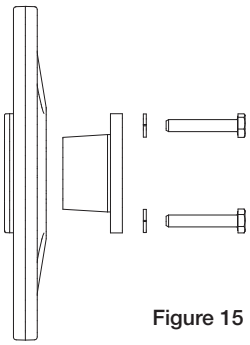 Figure 15
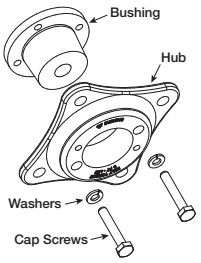	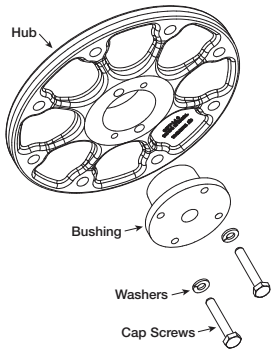
 Figure 16 Standard Bushing Orientation	 Figure 17 Reverse Bushing Orientation

3. **Standard Mounting** - Take the two socket head cap screws that were removed and install them into the visibly threaded holes on the wheel hub.
   Reverse Mounting - Install the two socket head cap screws into the visibly threaded holes of the bushing flange.
4. Once both socket head cap screws are installed, tighten them an eighth of a turn at a time, alternating between the two until the hub comes loose from the bushing.

Bushing Installation:

1. Clean all surfaces of hub and bushing to remove any oil or residue present and do not use any lubricant to install bushing into the hub. For both standard and reverse mounting styles, the socket head cap screws are adjustable from the inlet of the fan.
2. **Standard Mounting:** Slide the bushing and shaft key onto the fan shaft followed by the wheel and hub assembly. If present, use the keyway setscrew to hold the shaft key and bushing in place but DO NOT overtighten as this can damage the bushing. Align the unthreaded holes of the hub with the threaded holes of the tapered bushing.
   Reverse Mounting: Slide the wheel and hub assembly onto the fans shaft followed by the bushing and shaft key. If present, use the keyway setscrew to hold the shaft key and bushing in place but DO NOT overtighten as this can damage the bushing. Align the unthreaded holes of the tapered bushing with the threaded holes of the hub.
3. Install the two bushing socket head cap screws into the aligned holes by hand (or without excessive torque) until the heads of the socket head cap screws are seated against the mating surface.
4. Adjust the height of the wheel in the fan relative to the inlet venturi then tighten the two socket head cap screws an eighth turn at a time in an alternating fashion and to a torque of 10 ft-lbs.

Belt/Bearing Maintenance BSQ Unit

1. Belts tend to stretch after a period of time. They should be checked periodically for wear and tightness. When replacing belts, use the same type as supplied with the unit.
2. Matched belts should always be used on units with multi-groove pulleys.
3. For belt replacement, loosen the tensioning device enough to allow removal of the belt by hand. Do not force belts on or off. This may cause cords to break, leading to premature belt failure.
4. Once installed, adjust belts as shown in "Pre-Start-Up Checks."
5. Shaft bearings can be classified in two groups: relubricating and non-relubricating. All bearings on standard model BSQ fans are factory lubricated and require no further lubrication under normal use (between -20ºF and 180ºF *(-29ºC and 82ºC)* in a relatively clean environment).
6. Units installed in hot, humid or dirty locations should be equipped with special bearings. These bearings will require frequent lubrication. Caution should be employed to prevent overpacking or contamination.
7. Grease fittings should be wiped clean. The unit should be in operation while lubricating. Extreme care should be used around moving parts.
8. Grease should be pumped in very slowly until a slight bead forms around the seal. A high grade lithium base grease should be used.

Recommended Relubrication Frequency in Months

NOTE: If unusual environment conditions exist (extreme temperature, moisture or contaminants) more frequent lubrication is required.

A good quality lithium base grease, conforming to NLGI Grade 2 consistency, such as those listed here may be used.

Suggested Fan Bearing Greasing Intervals	
Interval (months)	**Type of Service**
1 to 3	Heavy duty in dirty, dusty locations; high ambient temperatures; moisture laden atmosphere; vibration.
3 to 6	12 to 24 hours per day, heavy duty, or if moisture is present
6 to 12	8 to 16 hours per day in clean, relatively dry atmosphere
12 to 18	Infrequent operation or light duty in clean atmosphere

Grease Manufacturers	
Manufacturer	**Grease (NLGI #2)**
U.S. Electric Motors	Grease No. 83343
Chevron U.S.A. Inc	Chevron SRI Grease #2
Mobil Oil Corporation	Mobilith
	Mobil 532
Texaco, Inc.	Premium BRB #2
	Texaco Multifak #2
Amoco Oil Co.	Rykon Premium #2
Exxon	Unirex N2
Shell	B Shell Alvania #2

Parts List

Each fan bears a manufacturer's nameplate with model number and serial number embossed. This information will assist the local Greenheck representative and the factory in providing service and replacement parts. Before taking any corrective action, make certain unit is not capable of operation during repairs.

CAUTION
A fan manufactured with an explosion resistant motor does not certify the entire unit to be explosion proof. Refer to UL Listing Mark for the fans approved usage.

CAUTION
La présence d'un moteur antidéflagrant sur un ventilateur ne garantit pas que tout l'appareil est antidéflagrant. Pour connaître les emplois autorisés de l'appareil, voir son marquage de conformité UL.

SQ Direct Drive Centrifugal Inline Exhaust Fan

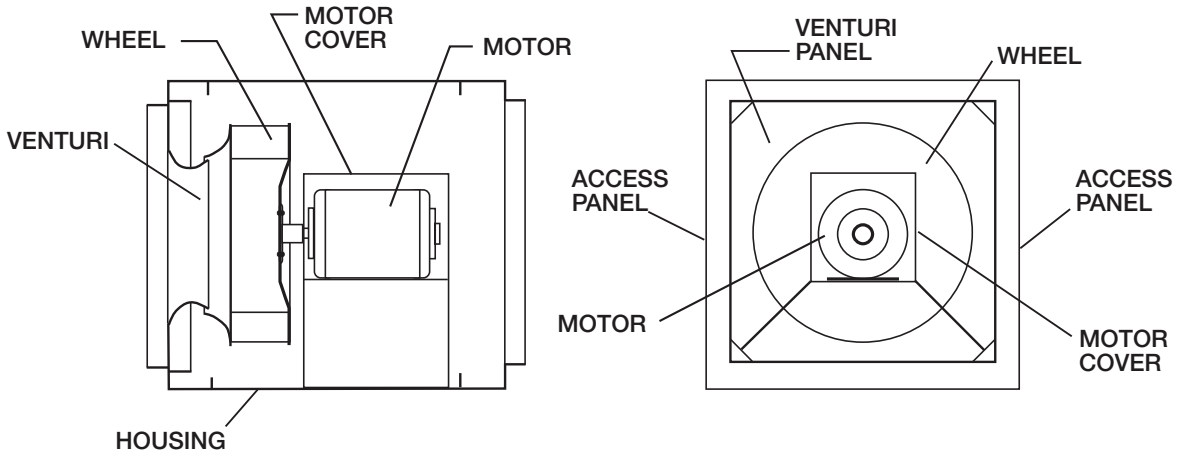

BSQ Belt Drive Centrifugal Inline Exhaust Fan

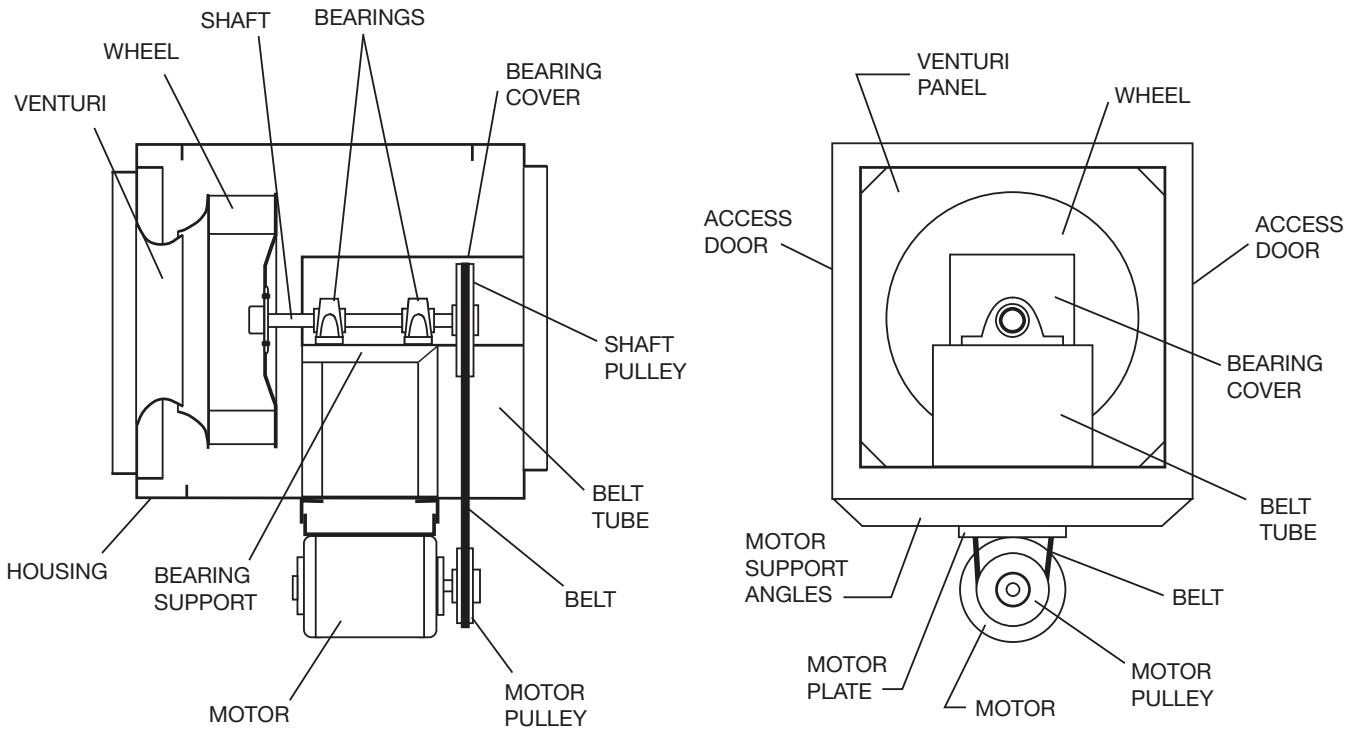

Isolator Parts List

STANDING SUPPORT ISOLATOR

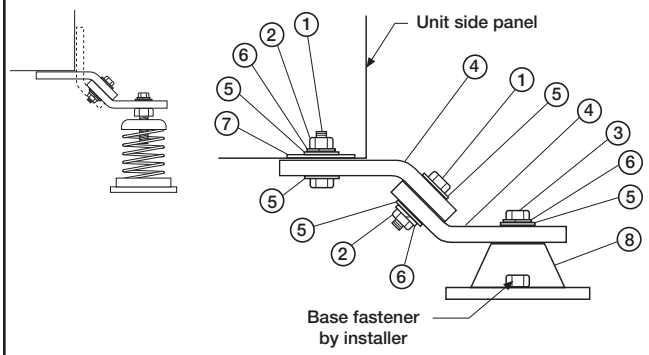

No.	Qty.	Description	SQ-60 thru 140 BSQ-100 thru 140	SQ-160 BSQ-160 thru 420
1	8	Cadium plated hex head bolts	3/8 in. - 16 x 1 in.	3/8 in.-16 x 1 1/4 in.
2	8	Cadium plated hex nuts	3/8 in. - 16	3/8 in. - 16
3	4	Cadium plated hex head bolts	5/16 in. - 18 x 1 in.	3/8 in. - 16 x 1 in.
4	8	Std. mount bracket with (2) 7/16 in. holes	3/16 in.	1/4 in.
5	20	Cadium plated washer	7/8 in. O.D. x 3/8 in. I.D. x 1/16 in.	7/8 in. O.D. x 3/8 in. I.D. x 1/16 in.
6	12	Cadium plated lock washer	3/8 in.	3/8 in.
7	4	Cadium plated washer	1 3/8 in. O.D. x 9/16 in. I.D. x 3/32 in.	1 3/8 in. O.D. x 9/16 in. I.D. x 3/32 in.
8	4	Neoprene or Spring Isolator	Reference appropriate table below for replacement Isolator(s)	

HANGING SUPPORT ISOLATOR

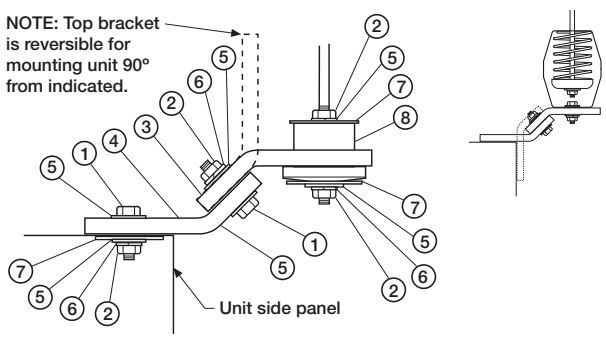

No.	Qty.	Description	SQ-60 thru 140 BSQ-100 thru 140	SQ-160 BSQ-160 thru 420
1	8	Cadium plated hex head bolts	3/8 in. - 16 x 1 in.	3/8 in.-16 x 1 1/4 in.
2	16	Cadium plated hex nuts	3/8 in. - 16	3/8 in. - 16
3	4	Std. mount bracket with (1) 1/4 in. hole	3/16 in.	1/4 in.
4	4	Std. mount bracket with (2) 7/16 in. holes	3/16 in.	1/4 in.
5	24	Cadium plated washer	7/8 in. O.D. x 3/8 in. I.D. x 1/16 in.	7/8 in. O.D. x 3/8 in. I.D. x 1/16 in.
6	12	Cadium plated lock washer	3/8 in.	3/8 in.
7	12	Cadium plated washer	1 3/8 in. O.D. x 9/16 in. I.D. x 3/32 in.	1 3/8 in. O.D. x 9/16 in. I.D. x 3/32 in.
8	4	Neoprene or Spring Isolator	Reference appropriate table below for replacement Isolator(s)	

REPLACEMENT SPRING ISOLATOR(S)

MODEL	FAN SIZES					
BSQ	----	70-130	140-180	200	240-300	360-420
SQ	60-100	120-140	160	----	----	----
BASE MOUNT	FDS-1-35 BLUE	FDS-1-70 GREEN	FDS 1-120 GRAY	FDS 1-120 GRAY	FDS-1-220 BROWN	FDS-1-370 ORANGE
HANGING	SH-1-35 BLUE	SH-1-70 GREEN	SH-1-125 GRAY	SH-1-245 BROWN	SH-1-245 BROWN	SH-1-370 ORANGE

REPLACEMENT NEOPRENE ISOLATOR(S)

MODEL	FAN SIZE		
BSQ	70-140	160-200	240-420
SQ	60-140	160	----
BASE MOUNT	R-1 GREEN	R-2 BLACK	R-2 RED
HANGING	40DUR BLACK	50DUR BLACK	50DUR BLACK



Troubleshooting

WARNING
Before taking any corrective action, make certain unit is not capable of operation during repairs.

AVERTISSEMENT
Avant d'entreprendre toute action corrective, s'assurer que l'appareil ne pourra pas fonctionner durant les réparations.

PROBLEM	CAUSE	CORRECTIVE ACTION
Excessive noise or vibration	Wheel unbalance	Clean all dirt off wheel. Check wheel balance, rebalance in place if necessary.
	Bad bearings	Replace.
	Belts too tight or too loose	Adjust tension, see Figure 12.
	Wheel improperly aligned and rubbing	Center wheel on inlet, see Figure 9.
	Loose drive or motor pulleys	Align and tighten. See "Pre Start-Up Checks", see pages 10-11.
	Foreign objects in wheel or housing	Remove objects, check for damage or unbalance.
Reduced airflow	System resistance too high	Check system: Proper operation of backdraft or control dampers, obstruction in ductwork, clean dirty filters.
	Unit running backwards	Correct as shown in Figure 10.
	Excessive dirt buildup on wheels	Clean wheel.
	Improper wheel alignment	Center wheel on inlets, see Pre Start-Up Checks and Figure 9.

Our Commitment

As a result of our commitment to continuous improvement, Greenheck reserves the right to change specifications without notice.

Specific Greenheck product warranties are located on greenheck.com within the product area tabs and in the Library under Warranty.

Greenheck's Centrifugal Inline Fans catalog, Models SQ and BSQ provides additional information describing the equipment, fan performance, available accessories, and specification data.

AMCA Publication 410-96, Safety Practices for Users and Installers of Industrial and Commercial Fans, provides additional safety information. This publication can be obtained from AMCA International, Inc. at www.amca.org.

GREENHECK
Building Value in Air.

Phone: 715.359.6171 • Fax: 715.355.2399 • Parts: 800.355.5354 • E-mail: gfcinfo@greenheck.com • Website: www.greenheck.com

Copyright 2016 © Greenheck Fan Corporation

2

REVIEWED BY CONTRACTOR

Kudlik Construction Ltd.

NAME: Sandra Rousseau P.Eng

DATE: Mai 29, 2018

Mécanique Nordique Plumbing Heating Ventillation

mecanique.nordique@hotmail.com

1255 Rue J.A.Bombardier
Lévis, Québec
G7A 2P4
Téléphone: 418-496-1109
Télécopieur: 418-496-3803

IQALUIT WWTP UPGRADE

DRAWING FOR APPROVAL

Ingineer : NUNAMI STANTEC

DRAWING #: AD-002

Section 23 37 17
Article PART 2
Plans M-801
Application : S-1 , R-1 , ES-3 , E-1
Brand : EH PRICE
Model :520D , 80 ,
Revised # :
Supplyer : EH PRICE

STANTEC PROJECT #: 110126045

SUBMITTAL # AD-002

This review by Stantec is for general conformance with the design concept of Stantec's design of the:

☐ Architectural ☐ Electrical
☐ Structural ☐ Other
☑ Mechanical

component(s) only and does not mean that Stantec has verified or approves the shop drawing(s). The Contractor remains solely responsible for the shop drawing(s) and this review by Stantec does not relieve the Contractor of the Contractor's responsibility for errors or omissions in the shop drawing(s) or for meeting all requirements of the contract documents. This review does not mean that Stantec approves the detailed design inherent in the shop drawing, responsibility for which shall remain with the Contractor submitting same, nor does this review mean that Stantec accepts any deviation of the shop drawing(s) from the contract documents. The Contractor is responsible for confirming all dimensions and correlating them at the job site, for all construction means, methods and techniques, and for coordination of construction work of all trades, including coordination of all shop drawings.

Stantec

☐ REVIEWED
☑ REVIEWED, AS NOTED
☐ REVISE AND RESUBMIT
☐ NOT REVIEWED

DATE 2018-06-04

BY Brendan Zrum, P.Eng

Pages incl. 5
Date : **2018-05-29**
By : **Mécanique Nordique Inc.**

Confirm quantities

Grilles/Registers/Diffusers Submittals

Job Name: IQALUIT - WWTP Upgrade
Customer: MECANIQUE NORDIQUE
Engineer: STANTEC
Date Printed: 5/29/2018
Spec Section: 15 - HVAC

Contact: Renée Gaudreault
4645 rue Louis-B-Mayer
Laval, PQ H7P 6G5

Phone: 418-622-9946
Fax: 418-622-0322
Email: rgaudreault@ehpricesales.com

price®

All-In-One
Detailed Submittal Schedule
Grilles/Registers/Diffusers

	#	Qty	Model	Unit Size	Border	Pattern	Damper	Finish	Accessories
OK	1	4	520D	10.000, 10.000	F	L		B12	SW
	Desc: F - 1 1/4" (32) Flat Frame | L - Front Louver Blades parallel to Long Dimension | B12 - White - Powder								
OK	2	1	520D	12.000, 8.000	F	L		B12	SW
	Desc: F - 1 1/4" (32) Flat Frame | L - Front Louver Blades parallel to Long Dimension | B12 - White - Powder								
OK	3	3	520D	6.000, 6.000	F	L		B12	SW
	Desc: F - 1 1/4" (32) Flat Frame | L - Front Louver Blades parallel to Long Dimension | B12 - White - Powder								
OK	4	~~4~~ 5	520D	12.000, 10.000	F	L		B12	SW
	Desc: F - 1 1/4" (32) Flat Frame | L - Front Louver Blades parallel to Long Dimension | B12 - White - Powder								
OK	5	5	520D	12.000, 12.000	F	L		B12	SW
	Desc: F - 1 1/4" (32) Flat Frame | L - Front Louver Blades parallel to Long Dimension | B12 - White - Powder								
OK	6	2	520D	6.000, 4.000	F	L		B12	SW
	Desc: F - 1 1/4" (32) Flat Frame | L - Front Louver Blades parallel to Long Dimension | B12 - White - Powder								
OK	7	~~8~~ 7	520D	8.000, 4.000	F	L		B12	SW
	Desc: F - 1 1/4" (32) Flat Frame | L - Front Louver Blades parallel to Long Dimension | B12 - White - Powder								
OK	8	1	80	12.000, 10.000	F		VCS3	B12	SW
	Desc: F - 1 1/4" (32) Flat Frame | VCS3 - Coated Steel Opposed Blade Damper | B12 - White - Powder Coat								
OK	9	3	80	10.000,12000 ~~12.000, 10.000~~	F		VCS3	B12	SW
	Desc: F - 1 1/4" (32) Flat Frame | VCS3 - Coated Steel Opposed Blade Damper | B12 - White - Powder Coat								
OK	10	~~8~~ 10	80	14.000, 12.000	F		VCS3	B12	SW
	Desc: F - 1 1/4" (32) Flat Frame | VCS3 - Coated Steel Opposed Blade Damper | B12 - White - Powder Coat								
OK	11	1	80	14.000, 8.000	F		VCS3	B12	SW
	Desc: F - 1 1/4" (32) Flat Frame | VCS3 - Coated Steel Opposed Blade Damper | B12 - White - Powder Coat								
OK	12	4	80	6.000, 6.000	F		VCS3	B12	SW
	Desc: F - 1 1/4" (32) Flat Frame | VCS3 - Coated Steel Opposed Blade Damper | B12 - White - Powder Coat								
OK	13	1	80	18.000, 12.000	F		VCS3	B12	SW
	Desc: F - 1 1/4" (32) Flat Frame | VCS3 - Coated Steel Opposed Blade Damper | B12 - White - Powder Coat								

Confirm quantity

Confirm quantity

Confirm quantity

The order and sale are made pursuant to the terms of the Sales Agreement and the Sales Policies set out in the latest Customer Service Handbook.

520D Louvered Steel Supply Register – 3/4" Blade Spacing, Double Deflection

Core Style:

Double Deflection

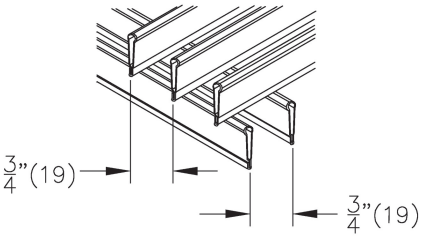

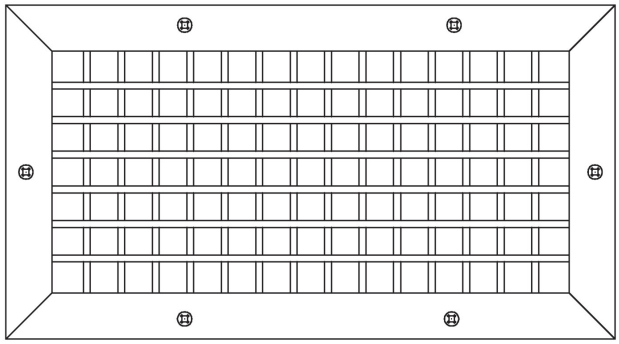

Fastening:

A: Countersunk Screwholes with Screw

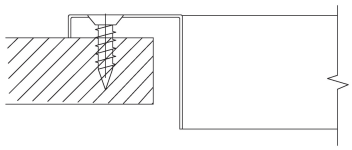

Border: F

1 1/4" (32) Flat Frame

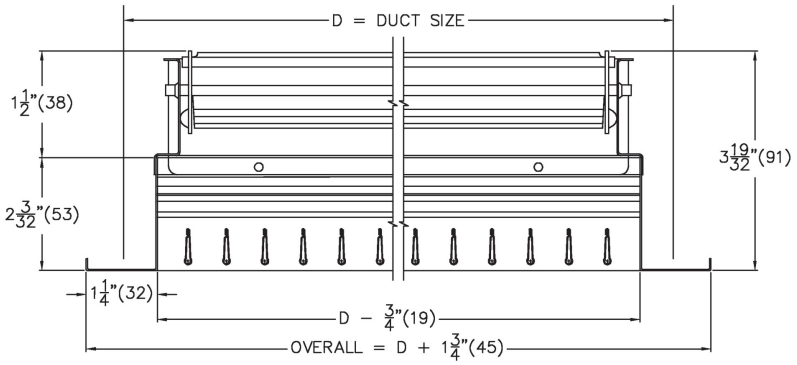

Material:

- Steel

Finish:

- B12 - White Powder Coat

Notes:

- Front blades parallel to Long dimension
- Individually adjustable roll formed blades on 3/4" (19) centers
- VCS3 opposed blade damper, coated steel
- Factory tolerance ± 1/32" (1)

PROJECT: IQALUIT - WWTP Upgrade **SUBMITTAL NO:** 258306 **SUBMITTAL DATE:** 5/29/2018
ENGINEER: STANTEC **CUSTOMER:** MECANIQUE NORDIQUE
DESCRIPTION: Louvered Steel Dbl Deflec Reg W/Damp, 3/4" Spacing
520D//I/6.000,12.000,8.000,10.000/6.000,12.000,4.000,10.000,8.000/F/L////A/SW/B12

© Copyright Price Industries 2018

All metric dimensions () are soft converted. Imperial dimensions are converted to metric and rounded to the nearest millimeter.
Information within this document is subject to change without notice.

80 Egg Crate Register with Steel Damper – 1/2" x 1/2" x 1/2" Core

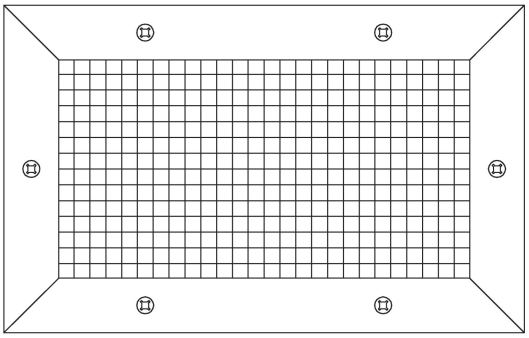

Fastening: A

Countersunk Screw Holes

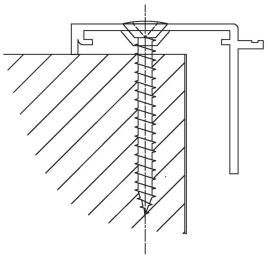

Border: F

1 1/4" (32) Flat Frame

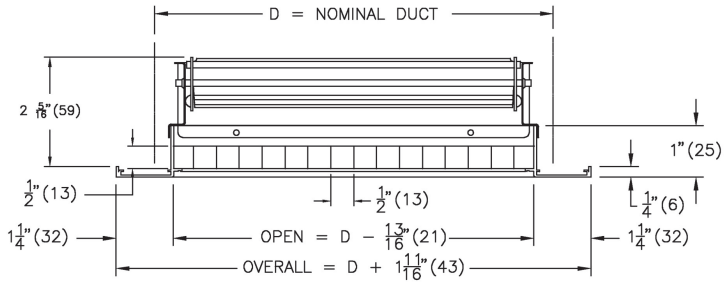

Material:

- Aluminum construction
- Damper: Coated Steel

Finish:

- B12 - White Powder Coat

Notes:

- 1/2" x 1/2" x 1/2" aluminum grid core
- Comes with opposed blade damper
- Factory tolerance ± 1/32" (1)

PROJECT: IQALUIT - WWTP Upgrade **SUBMITTAL NO:** 259683-E **SUBMITTAL DATE:** 5/29/2018
ENGINEER: STANTEC **CUSTOMER:** MECANIQUE NORDIQUE
DESCRIPTION: Egg Crate Grille, 1/2" X 1/2" X 1/2"
80//I/12.000,14.000,18.000,6.000/10.000,8.000,12.000,6.000//SW/F/////////A/////VCS3/B12

© Copyright Price Industries 2018

All metric dimensions () are soft converted. Imperial dimensions are converted to metric and rounded to the nearest millimeter.
Information within this document is subject to change without notice.

3

REVIEWED BY CONTRACTOR

Kudlik Construction Ltd.

NAME: Sandra Rousseau P.Eng

DATE: Mai 31, 2018

Mécanique Nordique Plumbing Heating Ventillation

mecanique.nordique@hotmail.com

1255 Rue J.A.Bombardier
Lévis, Québec
G7A 2P4
Téléphone: 418-496-1109
Télécopieur: 418-496-3803

IQALUIT WWTP UPGRADE

DRAWING FOR APPROVAL

Ingineer : NUNAMI STANTEC

DRAWING #: AD-003

Section 23 72 00
Article PART 2
Plans M-801
Application : HRV-1
Brand : VENMAR
Model : 2.0ES Product # 47110
Revised # :
Supplyer : EMCO

Pages incl. 3
Date : **2018-05-30**
By : **Mécanique Nordique Inc.**

STANTEC PROJECT #: 110126045

SUBMITTAL # AD-003

This review by Stantec is for general conformance with the design concept of Stantec's design of the:

☐ Architectural ☐ Electrical
☐ Structural ☐ Other
☑ Mechanical

Stantec

component(s) only and does not mean that Stantec has verified or approves the shop drawing(s). The Contractor remains solely responsible for the shop drawing(s) and this review by Stantec does not relieve the Contractor of the Contractor's responsibility for errors or omissions in the shop drawing(s) or for meeting all requirements of the contract documents. This review does not mean that Stantec approves the detailed design inherent in the shop drawing, responsibility for which shall remain with the Contractor submitting same, nor does this review mean that Stantec accepts any deviation of the shop drawing(s) from the contract documents. The Contractor is responsible for confirming all dimensions and correlating them at the job site, for all construction means, methods and techniques, and for coordination of construction work of all trades, including coordination of all shop drawings.

☑ REVIEWED

☐ REVIEWED, AS NOTED

☐ REVISE AND RESUBMIT

☐ NOT REVIEWED

DATE 2018-05-31

BY Brendan Zrum, P.Eng

HEAT RECOVERY VENTILATOR

HRV CONSTRUCTO 2.0ES
Part no. 47110
82 to 192 CFM (0.4 in. w.g.)



VB0167

CONSTRUCTO® SERIES: PERFECT FOR NEW RESIDENTIAL CONSTRUCTION

Contractors and builders need cost-effective, reliable and code-compliant mechanical ventilation systems for new home construction. The Venmar AVS Constructo Series offers superior value at an entry-level price. The Constructo 2.0ES represents over 15 years of continuous improvement to deliver contractors the durability and reliability they have come to expect from Venmar.

Key features:

- Maintenance free, totally enclosed, sealed bearings motor
- Pressure taps, balancing dampers and straps for insulated ducts for quick, effective installation
- Integrated "snap-in" drain system installs in seconds with no additional parts
- ENERGY STAR® qualified
- Compatible with the Deco-Touch™ digital wall control

REPAIRS AND MAINTENANCE

All parts of the HRV Constructo 2.0ES that could need maintenance can be removed in less than 5 minutes, allowing direct access for easy repairs. The motor is permanently lubricated.

WARRANTY

The HRV Constructo 2.0ES is protected by a 5-year warranty on parts. The heat recovery core is covered by a limited lifetime warranty, with the original proof of purchase.

Available at:

Controls

- This unit is very simple to operate. Once it is installed, press on its push button, located on the bottom of the unit, to activate it. Press once for low speed, once again for high speed, and once more to stop it.
- For more convenience, this unit can also be controlled by an optional main control. For a complete list of optional main and auxiliary controls available, refer to the ***Wall Control Compatibility Chart*** on last pages of wall controls specification sheet, available at www.venmar.ca.
- For more details about controls, refer to the ***Main and auxiliary wall controls*** user guide, also available at www.venmar.ca.

Options

- Complete line of registers and diffusers

Defrosting System

The HRV Constructo 2.0ES uses an efficient defrosting method. No negative pressure is created by air exhausted to the outdoors, as the air is recirculated into the house, helping to prevent any backdraft.

Outdoor temperature		Defrost Cycle (minutes)
°C	°F	Defrost / Operation
Warmer than -5	Warmer than 23	No defrost
-5 to -15	23 to 5	6 / 50
-15 to -27	5 to -17	6 / 25
-27 and less	-17 and less	10 / 20

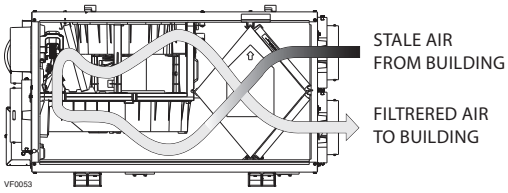

Heat Recovery Core

Dimensions: 12" x 14" x 15.5" (30.5 cm x 35.5 cm x 39.4 cm)

Exchange surface: 102 ft^2 (9.54 m^2)

Weight: 6.2 lb. (2.8 kg)

Material: Polypropylene

Type: Crossflow core

Warranty: Limited Lifetime

Requirements and Standards

- Complies with the UL 1812 requirements regulating the installation of Heat Recovery Ventilators
- Complies with the CSA C22.2 no. 113 Standard applicable to ventilators
- Complies with CSA F326 requirements regulating the installation of Heat Recovery Ventilators
- Technical data was obtained from published results of tests relating to CSA C439 Standards
- HVI certified and ENERGY STAR® qualified

Dimensions: HRV Constructo 2.0ES

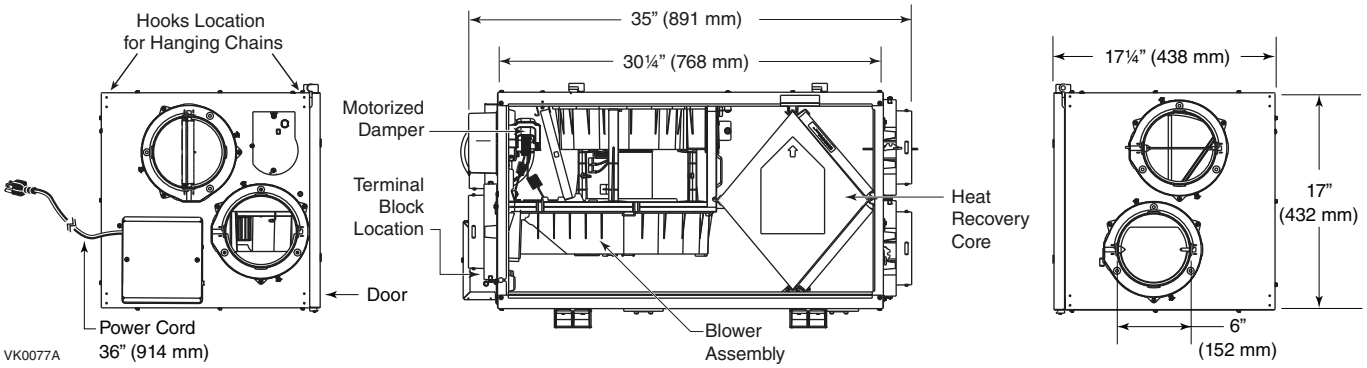

Ventilation Performance

External Static Pressure		Net Supply Air Flow			Gross Air Flow					
					Supply			Exhaust		
Pa	in. w.g.	l/s	cfm	m³/h	l/s	cfm	m³/h	l/s	cfm	m³/h
25	0.1	106	225	382	107	227	386	118	249	423
50	0.2	102	215	365	102	216	367	115	243	413
75	0.3	96	204	347	97	205	348	111	235	399
100	0.4	90	192	326	91	193	328	107	226	384
125	0.5	83	177	301	84	179	304	100	211	358
150	0.6	76	161	274	76	162	275	89	189	321
175	0.7	67	142	241	67	143	243	75	159	270

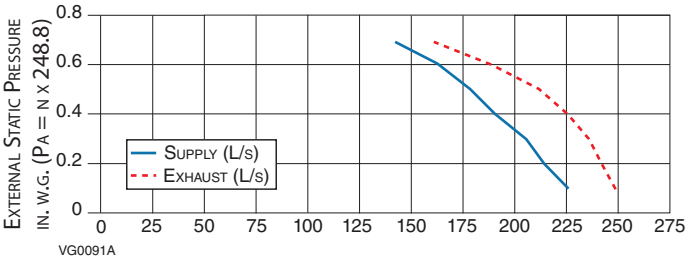

CFM (l/s = CFM x 0.4719) (m³/h = l/s x 3.6)

Energy Performance

Supply Temperature		Net Air Flow			Power Consumed Watts	Sensible Recovery Efficiency	Apparent Sensible Effectiveness	Latent Recovery Moisture Transfer
°C	°F	l/s	cfm	m³/h				
Heating								
0	32	39	82	139	71	65	75	0.01
0	32	61	130	221	129	60	69	0.01
-25	-13	40	84	143	114	60	76	0.03

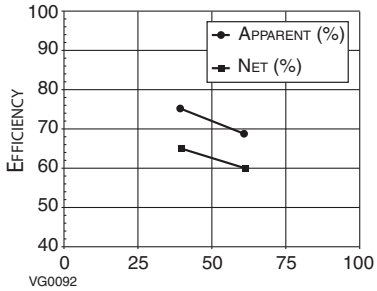

Air Flow - l/s (0.47 l/s = 1 CFM

NOTE: All specifications are subject to change without notice.

Specifications and Ratings

- Model: HRV Constructo 2.0ES
- Part Number: 47110
- Total Assembled Weight (including polypropylene core): 65 lb. (29.5 kg)
- Drains: 1/2" (1.2 cm) fittings with 10 ft. (3 m) PVC drain hose
- Filters: 15 ppi washable reticulated foam 15.375" x 7.125" x 0.75" (39 cm x 18 cm x 1.9 cm)
- 6" Round Ports
- Housing: Pre-painted steel
- Insulation: Expanded polystyrene
- Mounting: Suspension by chains and springs
- Supply & Exhaust Blower Motor: 1 PSC Motor
  - Protection type: Thermally protected
  - Insulation class: B
- Speed Control on unit: Low and High speeds. Other modes available with optional mainl wall controls.
- Heat Recovery Core:
  - Heat Exchange Surface Area: 102 ft.² (9.54 m²)
  - Type: Crossflow
  - Material: Polypropylene
- Unit Electrical Characteristics: 120 volts, 60 Hz, 2.1 amps, 195 watts

Project:	REMARKS
Location:	
Part Number: 47110	
Quantity:	
Submitted by: Date:	

Residential Products Group, 550 Lemire Blvd., Drummondville, Qc, Canada J2C 7W9 - Tel.: 1-800-567-3855 Fax: 1-800-567-1715

USER AND INSTALLER MANUAL



VB0253

HRV CONSTRUCTO 1.5ES	46110
HRV CONSTRUCTO 2.0ES	47110
HRV SOLO 1.5ES	46720
HRV SOLO 2.0ES	47720
HRV NOVOFIT 1.5ES	46121
HRV NOVOFIT 2.0ES	47121



VB0254

100H	1601706
200H	1601708
NOVO+ 100H	1601717
NOVO+ 200H	1601719

READ AND SAVE THESE INSTRUCTIONS

RESIDENTIAL USE ONLY

7 72371 11856 0

THESE PRODUCTS EARNED THE ENERGY STAR® BY MEETING STRICT ENERGY EFFICIENCY GUIDELINES SET BY NATURAL RESOURCES CANADA AND THE US EPA. THEY MEET ENERGY STAR REQUIREMENTS ONLY WHEN USED IN CANADA.

20503 REV. 09

Please take note that this manual uses the following symbols to emphasize particular information:

⚠WARNING
Identifies an instruction which, if not followed, might cause serious personal injuries including possibility of death.

CAUTION
Denotes an instruction which, if not followed, may severely damage the unit and/or its components.

NOTE: Indicates supplementary information needed to fully complete an instruction.

LIMITATION

For residential (domestic) installation only. Installation work and electrical wiring must be done by a qualified person in accordance with all applicable codes and standards, including fire-rated construction codes and standards.

⚠WARNING

TO REDUCE THE RISK OF FIRE, ELECTRIC SHOCK, OR INJURY TO PERSON(S) OBSERVE THE FOLLOWING:

1. Use this unit only in the manner intended by the manufacturer.
2. Before servicing or cleaning this unit, disconnect power cord from electrical outlet.
3. This unit is not designed to provide combustion and/or dilution air for fuel-burning appliances.
4. When cutting or drilling into a wall or ceiling, do not damage electrical wiring and other hidden utilities.
5. Do not use this unit with any solid-state speed control device other than those specified in section 7.2.
6. This unit must be grounded. The power supply cord has a 3-prong grounding plug for your personal safety. It must be plugged into a mating 3-prong grounding receptacle, grounded in accordance with the national electrical code and local codes and ordinances. Do not remove the ground prong. Do not use an extension cord.
7. Do not install in a cooking area or connect directly to any appliances.
8. Do not use to exhaust hazardous or explosive materials and vapors.
9. When performing installation, servicing or cleaning this unit, it is recommended to wear safety glasses and gloves.
10. When applicable local regulation comprises more restrictive installation and/or certification requirements, the aforementioned requirements prevail on those of this document and the installer agrees to conform to these at his own expenses
11. Due to the weight of the unit, two installers are recommended to perform installation

CAUTION

1. To avoid prematurely clogged filters, turn the unit OFF during construction or renovation.
2. Please read specification label on product for further information and requirements.
3. Be sure to duct air outside – Do not intake/exhaust air into spaces within walls or ceiling or into attics, crawl spaces, or garage. Do not attempt to recover the exhaust air from a dryer or a range hood.
4. Intended for residential installation only in accordance with the requirements of NFPA 90B (for a unit installed in U.S.A.) or Part 9 of the National Building Code of Canada (for a unit installed in Canada).
5. Do not run any air ducts directly above or within 2 ft (0.61 m) of a furnace or its supply plenum, boiler, or other heat producing appliance. If a duct has to be connected to the furnace return plenum, it must be connected 10' (3.1 m) away from plenum's connection to the furnace.
6. The ductwork is intended to be installed in compliance with all applicable local and national codes.
7. When leaving the house for a long period of time (more than two weeks), a responsible person should regularly check if the unit operates adequately.
8. If the ductwork passes through an unconditioned space (e.g.: attic), the unit must operate continuously except when performing maintenance and/or repair. Also, the ambient temperature of the house should never drop below 18°C (65°F).
9. At least once a year, the unit mechanical and electronic parts should be inspected by qualified service personnel.
10. Do not use your unit during construction or renovation of your house or when sanding drywall. Certain types of dust and vapors may damage your system.
11. Make sure at all times that the outside intake and exhaust hoods are free from any snow during the winter season. It is important to check your unit during a big snow storm, so it doesn't draw in any snow. If this is the case, please turn the unit OFF for a few hours.
12. Since the electronic control system of the unit uses a microprocessor, it may not operate correctly because of external noise or very short power failure. If this happens, unplug the unit and wait approximately 10 seconds. Then, plug the unit in again.

TABLE OF CONTENTS

FOR THE USER 4

1. USING THIS UNIT 4

1.1 Your ventilation system 4

1.2 Integrated Control 4

2. USER SERVICING INSTRUCTIONS 5

2.1 Quarterly Maintenance 5

2.2 Annual Maintenance 5

3. USER'S TROUBLESHOOTING 5

4. WARRANTY 6

FOR THE INSTALLER 4

5. AIR DISTRIBUTION 7

6. INSTALLATION 7

6.1 Preparing the unit 7

6.2 Locating the Unit 7

6.3 Installing the Ductwork and the registers 8

6.3.1 Fully Ducted System 8

6.3.2 Exhaust Ducted System - Supply Side 8

6.3.3 Exhaust Ducted System - Return Side 8

6.3.4 Simplified Installation - Return/Supply 9

6.3.5 Simplified Installation - Return/Return 9

6.4 Installing the Exterior Hoods 9

6.5 Connecting the ducts to the Unit 10

6.6 Connecting the Drain 11

7. CONTROLS 11

7.1 Setting Extended Defrost 11

7.2 Electrical Connection to Optional Wall Control 12

7.2.1 Altitude or Platinum 13

7.2.2 Deco-Touch 13

7.2.3 Lite-Touch Constructo, Simple-Touch Constructo or Lite-Touch Bronze 13

7.2.4 Constructo or Bronze 13

7.2.5 Optional Auxiliary Controls 13

9. BALANCING THE UNIT 14

10. SERVICE PARTS 14

11. WIRING DIAGRAM 16

12. TROUBLESHOOTING 17

PRODUCT REGISTRATION CARD - FICHE D'ENREGISTREMENT DU PRODUIT

IMPORTANT: Please complete and return this questionnaire within 10 days of your purchase to the address below. Note that only the questions on this side of the page are mandatory. Your answers will be used for market research studies and reports, and will help us to better serve you in the future. **IMPORTANT:** Veuillez remplir ce questionnaire et nous le retourner dans les 10 jours suivant votre achat à l'adresse inscrite en bas de la page. Veuillez noter que seules les questions de ce côté-ci de la page sont obligatoires. Vos réponses serviront à des études de marché et nous aideront à mieux vous servir dans l'avenir.

First name - Prénom

Last name – Nom de famille

Address – Adresse

Apt. no. – App.

City – Ville

Province

Postal code – Code postal

Country – Pays

E-mail address – Courriel

Language preferred – Langue de correspondance

Telephone no. (day) – N° de téléphone (jour)

Telephone no. (evening) – N° de téléphone (soir)

Date of purchase – Date d'achat

Model no. – N° de modèle

Serial no. – N° de série

Centre d'enregistrement de produit - Product registration center, 550 boulevard Lemire, Drummondville, Québec Canada J2C 7W9

BACK / VERSO ➤

1. USING THIS UNIT

CAUTION

Before using this unit for the first time, please take the time to carefully read page 2 of this guide to ensure it is used safely and and properly.

1.1 Your ventilation system

This unit is designed to provide fresh air to your home while exhausting stale, humid air. By eliminating accumulated pollutants and humidity, it maintains an optimum air quality and an ideal relative humidity. It is equipped with a recovery core that is designed specifically to control excess humidity and reduce ventilation costs by recovering the heat or energy from the exhausted air, and using that same heat or energy to warm the fresh air being supplied. This recovery process is accomplished in such a way that the stale air is never mixed with the fresh air.

When the outdoor temperature is below -5°C (23°F), recovery creates frost in the module. To maintain proper operation, the unit is programed to defrost the recovery module. The defrost duration and frequency vary according to the outdoor temperature. After defrosting, the unit returns to the operating mode selected by the user.

1.2 Integrated Control

Unit Booting Sequence

The unit's booting sequence is similar to a personal computer's booting sequence. Each time the unit is plugged in after being unplugged, or after a power failure, it will perform a 30-second booting sequence before starting to operate. **No command will be taken until the unit is fully booted.**

This unit is equipped with an **integrated control**, located on its electrical compartment.

- Use the integrated push-button to go from OFF to Low Speed, to High Speed, and back to OFF.
- The color of the LED indicator shows what speed the unit is running in:

LED color	Results
AMBER	Unit is in Low speed
GREEN	Unit is in High speed
NO LIGHT	Unit is OFF or controlled by a main control

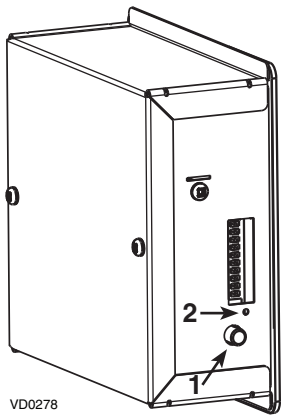

VD0278

For more convenience, this unit can also be controlled using an optional wall control. **When using an optional main control, unit must be set to OFF using the integrated control.**

For more information about their operation modes refer to the *Main and auxiliary wall control User Guide*, included with the ventilation unit and also available at www.vanee.ca or www.venmar.ca.

Would you like to receive occasional informational e-mail offers including product updates and special promotions from us? **Yes/No**

What problem were you trying to solve with your purchase? (Check each one that applies to you.)

- ☐ Bad odors
- ☐ Respiratory problems
- ☐ Excess of humidity
- ☐ Temperature standardization
- ☐ Lack of fresh air
- ☐ Dust
- ☐ Mildew
- ☐ Allergies
- ☐ No specific problems
- ☐ Others

Who installed your unit?

- ☐ Home builder
- ☐ Recommended installer
- ☐ Friend / family
- ☐ Contractor
- ☐ Yourself

Please read the following list of criteria carefully. Indicate the importance of your purchase decision on a scale of 1 (less important) to 5 (most important).

- ___ Price
- ___ Warranty
- ___ Product design
- ___ Ventilation capacity
- ___ Filter maintenance indicator
- ___ Filtration quality
- ___ Recirculation
- ___ Heat recovery
- ___ Controls
- ___ Ease of cleaning
- ___ Manufacturer's reputation
- ___ Ease of use
- ___ Noise level
- ___ Other

Aimeriez-vous recevoir plus de détails sur nos promotions, offres de rabais et mises à jour de nos produits? **Oui/Non**

Quels problèmes essayez-vous de résoudre par cet achat? (Cochez toutes les cases pertinentes)

- ☐ Mauvaises odeurs
- ☐ Problèmes respiratoires
- ☐ Excès d'humidité
- ☐ Uniformisation de la température
- ☐ Manque d'air frais
- ☐ Poussières
- ☐ Moisissures
- ☐ Allergies
- ☐ Pas de problèmes spécifiques
- ☐ Autres (Précisez SVP)

Qui a installé l'appareil?

- ☐ Constructeur de la maison
- ☐ Installateur recommandé
- ☐ Ami/membre de la famille
- ☐ Entrepreneur
- ☐ Vous-même

Veuillez lire la liste des critères de sélection ci-dessous. Sur une échelle de 1 (étant le moins important) à 5 (étant le plus important), veuillez indiquer l'importance de chacun d'entre eux dans votre décision d'achat.

- ___ Prix
- ___ Garantie
- ___ Design du produit
- ___ Débit de ventilation
- ___ Indicateur d'entretien du filtre
- ___ Qualité de filtration
- ___ Recirculation
- ___ Récupération de chaleur
- ___ Récupération d'énergie
- ___ Fonctions
- ___ Facilité de nettoyage
- ___ Réputation du fabricant
- ___ Simplicité d'utilisation
- ___ Niveau de bruit
- ___ Autres (Précisez SVP)

Are you connected? Please do not hesitate to complete the product registration card via our Web site at **www.bnv.ca**

Enregistrez-vous en ligne! N'hésitez pas à remplir la fiche d'enregistrement du produit sur notre site Internet au **www.bnv.ca**

2. USER SERVICING INSTRUCTIONS

2.1 Quarterly Maintenance

⚠WARNING

- **Risk of electric shock. Before performing any maintenance or servicing, always disconnect the unit from its power source.**
- **When cleaning the unit, it is recommended to wear safety glasses and gloves.**

1. Unplug unit.
2. Unlatch the door. Lift the panel towards you. Hold it firmly and hit on the right side of the panel. The door will slide to the left.
3. Clean the inside of the door with a damp cloth.
4. Clean filters:
   - Remove filters.
   - Vacuum to remove most of the dust.
   - Wash with a mixture of warm water and mild soap. You may add bleach if you wish to disinfect (one tablespoon per gallon). Rinse thoroughly. Shake filters to remove excess water and let dry.
5. Clean the condensation tray with a damp cloth.
6. Check the exterior air intake hood:
   - Make sure there are no leaves, twigs, ice or snow that could be drawn into the vent.
   - Clean if necessary.

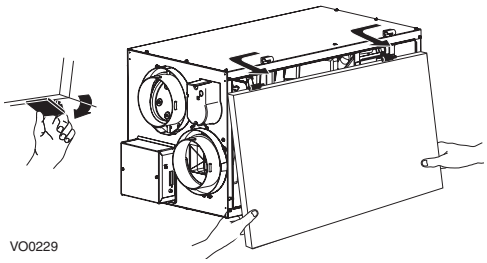
VO0229

CAUTION

Even a partial blocking of this air vent could cause the unit to malfunction.

7. Reassemble the components.
8. Reconnect power supply.

2.2 Annual Maintenance

1. Perform Quarterly Maintenance up to step 6.
2. Blean the core as follows:
   - Remove the core.
   - Let it soak in a mixture of cold or lukewarm water and mild soap (dishwashing liquid).
   - Rinse thoroughly.
   - Shake the core to remove excess water and let it dry.
3. Clean blower assembly using a vacuum cleaner with a soft brush attachment to remove the dust.
4. Reassemble the components.
5. Reconnect power supply.

3. USER'S TROUBLESHOOTING

Problem	You should try this	
Nothing works.	• See if the unit is plugged in and receiving power from the house circuit breaker or fuse.	
Noisy unit.	• Clean the unit (see Section 2). If the problem is not solved, contact your installer.	
Condensation on windows (air too humid).	• Operate the unit at maximum speed (MAX.) during activities generating excess humidity (family gatherings, extra cooking, etc.). • Leave curtains half-open to allow air circulation. • Store all firewood in a closed room with a dehumidifier or in a well ventilated room, or store the wood outdors. • Keep the temperature in your house above 18°C (64°F).	
Air too dry.	• Operate the unit at low speed (MIN.). • Temporarily switch to the intermittent mode (if available).	• Temporarily use a humidifier.
Air too cold at the air supply grille.	• Make sure the outdoor hoods are not blocked. • Operate the unit at low speed (MIN.). • Have the system's balancing checked.	• Have the unit's defrost system checked. • Install a duct heater.

Contact customer service at 1-800-567-3855 for any unresolved issue.

4. WARRANTY

This ventilation unit is a high-quality product, built and packaged with care. The manufacturer warrants to the original purchaser of its product, that such products will be free from defects for the period stated below, from the date of original purchase. For all units, the warranty covers parts only against any operational defect. This 5-year warranty is subject to performance of the core maintenance according to the recommendations in this manual. The heat recovery core (HRV) has a limited lifetime warranty. If any defect should occur, we urge you to read the user guide carefully. If the problem persists, observe the following rules:

RULES TO FOLLOW

If the unit is defective, contact your ventilation contractor (see address on your manual's cover page). The contractor will determine with you the reason for the defect, and if needed, do the replacement or repair. If ever it is impossible to reach your ventilation contractor, call 1-800-567-3855 (North America); the personnel will be pleased to give you the phone number of a distributor or service center near you.

REPLACEMENT PARTS AND REPAIR

In order to ensure your ventilation unit remains in good working condition, you must use the manufacturer's genuine replacement parts only. The manufacturer's genuine replacement parts are specially designed for each unit and are manufactured to comply with all the applicable certification standards and maintain a high standard of safety. Any third party replacement part used may cause serious damage and drastically reduce the performance level of your unit, which will result in premature failing. The manufacturer also recommends that you contact a service depot certified by the manufacturer for all replacement parts and repair.

BILL OF PURCHASE

No replacement or repair covered by the warranty will be carried out unless the unit is accompanied by a copy of the original bill of purchase. Please retain your original.

MISCELLANEOUS COSTS

In each case, the labor costs for the removal of a defective part and/or installation of a compliant part will not be covered by the manufacturer.

CONDITIONS AND LIMITATIONS

These units are created for **residential use only** and must be used in a building as defined below:

Building: All structures zoned and/or erected for the act, process or art of human or animal habitation and/or the storage or warehousing of goods.

Residential use: Dwelling, lodging, suite: Building, or part of a building, intended to act as either the domicile to one or several people which can include general sanitary, food consumption and rest facilities. Buildings of only one room or a group of rooms including those occupied by a tenant or owner; comprise the lodgings, the individual rooms of the motels, hotels, rooming/lodging houses, boarding/half-way/foster homes, dormitories, and suites, as well as the stores and the business establishments constituted by only one room in a dwelling.

Commercial use: Agricultural establishment, commercial establishment for assembly, care, or detention: Building or part of a building that does not contain a dwelling, situated on land dedicated to agriculture or farming and used primarily to shelter animals, or for the production, the storage or the treatment of agricultural or horticultural products or animal food. Building or part of a building, used for the display or retail of goods, professional or personal services, or commodities. Building, or part of a building used by persons gathering for civic activities, religious or political assembly, tourism, educational/ vocational training, recreation or the consumption of food or drink. Building, or part of a building used to shelter persons of impaired physical or psychological states, persons requiring palliative care or medical treatments, or persons for reasons out of their control, cannot escape harm or threat of danger autonomously.

Industrial use: Building, or part of a building, used for the assembly, the manufacture, the creation, the treatment, the repair or the storage of products and combustible materials and that contain fuels that when ignited or exploded in sufficient quantity may constitute a risk of fire.

The above warranty applies to all cases where the damage is not a result of poor installation, improper use, mistreatment or negligence, acts of God, or any other circumstances beyond the control of the manufacturer. Furthermore, the manufacturer will not be held responsible for any bodily injury or damage to personal property or real estate, whether caused directly or indirectly by the unit. This warranty supersedes all prior warranties.

CAUTION

- **Before installing this unit, please take the time to carefully read page 2 of this guide to ensure it is installed safely and and properly.**
- **For Novoclimat compliant installation requirements, please refer to the current Novoclimat Program criterias.**

5. AIR DISTRIBUTION

Normal Operation

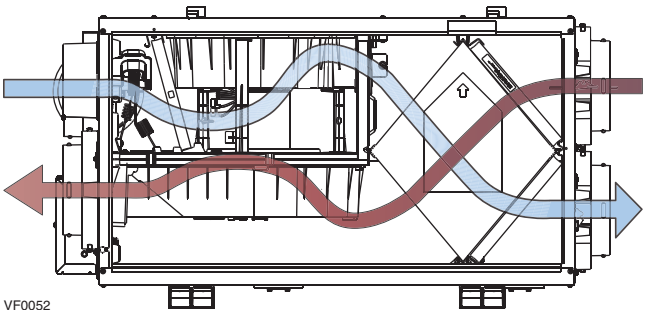

VF0052

Defrost Mode

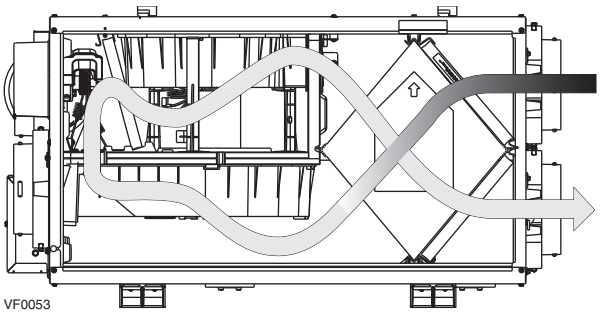

VF0053

6. INSTALLATION

6.1 Preparing the unit

⚠WARNING

When performing installation, servicing or cleaning the unit, it is recommended to wear safety glasses and gloves.

Inspect the exterior of the unit for shipping damage. Make sure that there is no damage to the door, ports, power cord, etc.

Before installing the unit, remove the shipping bracket by unscrewing its wing nut and loosening both retaining screws.

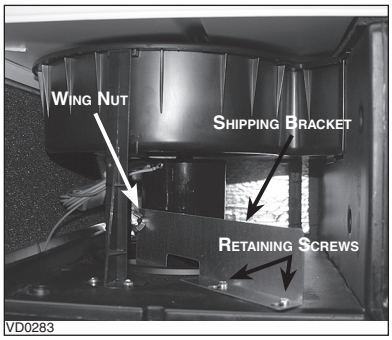

VD0283

6.2 Locating the Unit

CAUTION

HRV Solo 1.5ES and HRV Solo 2.0ES units can be installed in normal or reverse postion (upside down). When installed in reverse position in a cold region where outdoor temperature could drop below -20ºC (-4ºF) for more than 5 days in a row, these units must always be set in extended defrost. See Section 7.1 Setting Extended Defrost.

Choose an **appropriate location** for the unit:

- Within an area of the house where the **ambient temperature is kept between 10°C (50°F) and 40°C (104°F)**
- Away from living areas (dining room, living room, bedroom), if possible
- So as to provide easy access to the interior cabinet for quarterly and annual maintenance, and to the control panel on the side of the unit
- Close to an exterior wall, so as to limit the length of the insulated flexible duct to and from the unit
- Close to a drain. If no drain is close by, use a pail to collect run-off
- Away from hot chimneys, electrical panel and other fire hazards
- Allow for a power source (standard outlet)

Hang the unit with the 4 chains and springs provided (see illustrations at right).

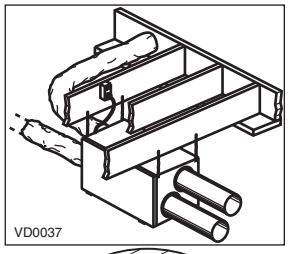

VD0037

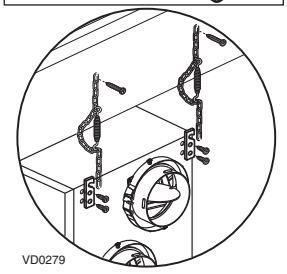

VD0279

6.3 Installing the Ductwork and the registers

⚠WARNING

- **Never install a stale air exhaust register in a closed room where a combustion device operates, such as a gas furnace, a gas water heater or a fireplace.**
- **When performing duct connections, always use approved tools and materials. Respect all corresponding laws and safety regulations. Please refer to your local building code.**

6.3.1 Fully Ducted System

Stale air exhaust ductwork:

- Install registers in areas where contaminants are produced: Kitchen, bathrooms, laundry room, etc.
- Install registers on an interior wall, 6 to 12 inches (152 to 305 mm) away from the ceiling OR install them in the ceiling.
- Install the kitchen register at least 4 feet (1.2 m) away from the range.

Fresh air distribution ductwork:

- Install registers in bedrooms, dining room, living room and basement.
- Install registers either in the ceiling or high on the walls with the airflow directed towards the ceiling.
- If a register must be installed in the floor, direct the air flow up the wall.

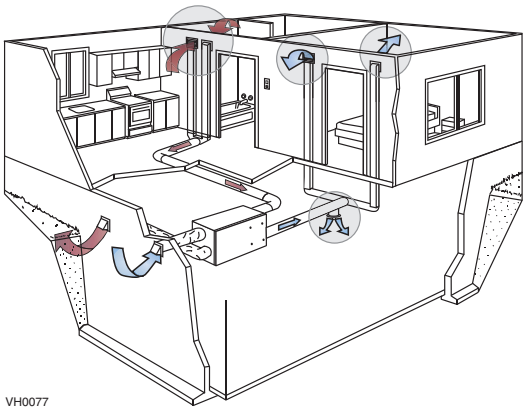

VH0077

6.3.2 Exhaust Ducted System - Supply Side

CAUTION

When performing duct connections to the furnace supply duct, use metal ducts appropriately sized to support the additional airflow produced by the unit.

Stale air exhaust ductwork:

- Install registers in areas where contaminants are produced: Kitchen, bathrooms, laundry room, etc.
- Install registers on an interior wall, 6 to 12 inches (152 to 305 mm) away from the ceiling OR install them in the ceiling.
- Install the kitchen register at least 4 feet (1.2 m) away from the range.

Fresh air distribution ductwork:

- Cut an opening into the furnace supply duct at least 18 inches (0.5 m) away from the furnace.
- Connect this opening to the fresh air distribution port of the unit (use metal ducts, see illustration at right).
- Make sure that the duct forms an elbow inside the furnace ductwork.

NOTE : For this type of installation, it is recommended, however, not essential, that the furnace blower be synchronized with the unit.

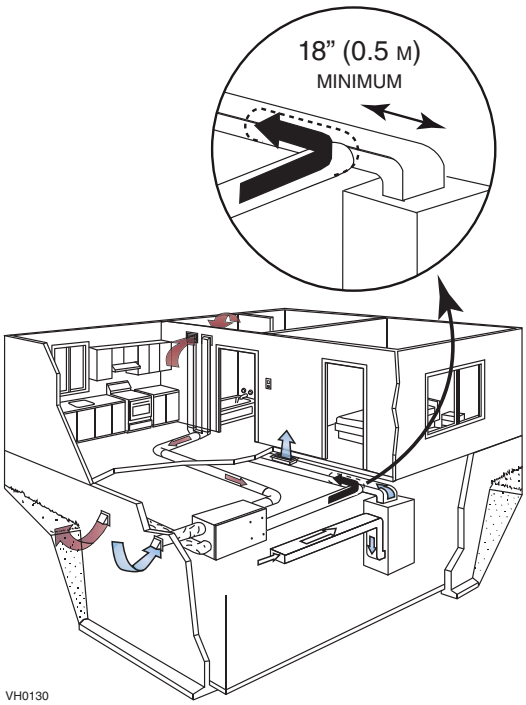

VH0130

6.3.3 Exhaust Ducted System - Return Side

Stale air exhaust ductwork:

- Install registers in areas where contaminants are produced: Kitchen, bathrooms, laundry room, etc.
- Install registers on an interior wall, 6 to 12 inches (152 to 305 mm) away from the ceiling OR install them in the ceiling.
- Install the kitchen register at least 4 feet (1.2 m) away from the range.

Fresh air distribution ductwork:

- Cut an opening into the furnace return duct not less than 10 feet (3.1 m) away from the furnace (**A**+**B**).
- Connect this opening to the fresh air distribution port of the unit (see illustration at right).

NOTE : For this type of installation, it is recommended, however, not essential, that the furnace blower be synchronized with the unit.

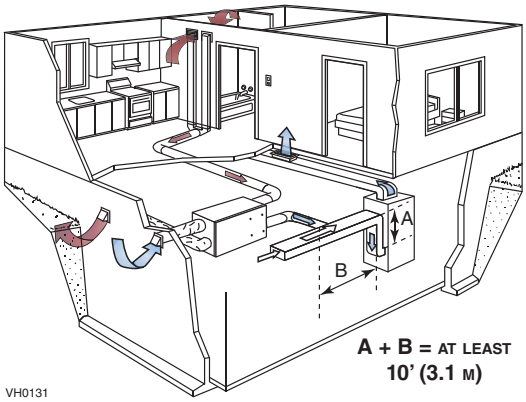

VH0131

6.3.4 Simplified Installation - Return/Supply

CAUTION

When performing duct connections to the furnace supply duct, use metal ducts appropriately sized to support the additional airflow produced by the unit.

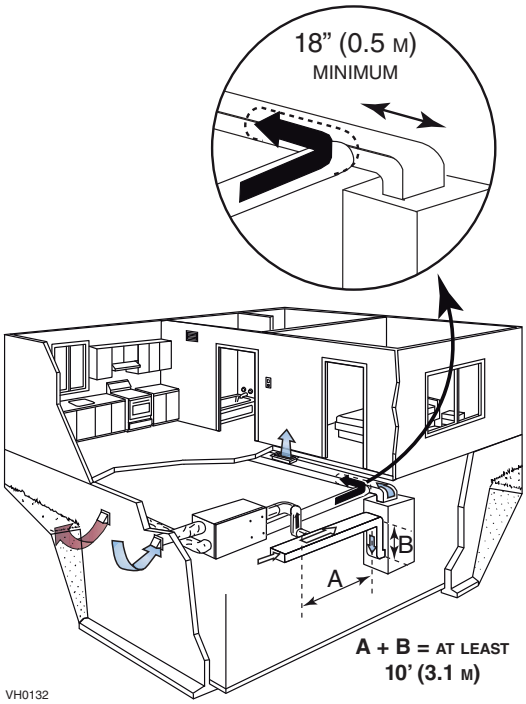

Stale air exhaust ductwork:

- Cut an opening into the furnace return duct not less than 10 feet (3.1 m) (A + B) away from the furnace.
- Connect this opening to the stale air intake port of the unit (as shown above).

Fresh air distribution ductwork:

- Cut an opening into the furnace supply duct at least 18 inches (0.5 m) away from the furnace.
- Connect this opening to the fresh air distribution port of the unit (use metal ducts, see illustration at right).
- Make sure that the duct forms an elbow inside the furnace ductwork.

NOTE : For this type of installation, it is recommended, however, not essential, that the furnace blower be synchronized with the unit.

6.3.5 Simplified Installation - Return/Return

Stale air exhaust ductwork:

CAUTION

For this type of installation, the furnace must always be synchronized with the unit. See section 7.

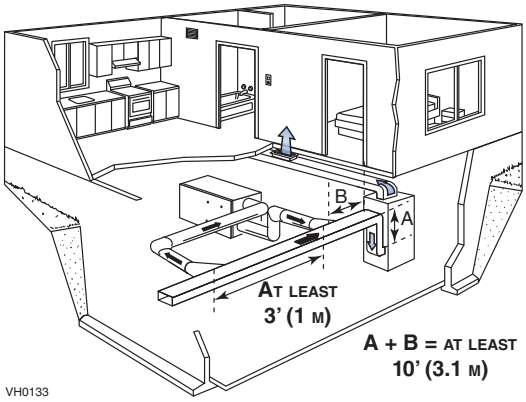

- Cut an opening into the furnace return duct not less than 10 feet (3.1 m) (A + B) away from the furnace.
- Connect this opening to the stale air intake port of the unit.

Fresh air distribution ductwork:

- Cut an opening into the furnace supply duct at least 18 inches (0.5 m) away from the furnace.
- Connect this opening to the fresh air distribution port of the unit (use metal ducts, see illustration at right).
- Make sure that the duct forms an elbow inside the furnace ductwork.
- Make sure that both connections to the furnace return duct are at least 3 feet (1 m) apart (C).

6.4 Installing the Exterior Hoods

Refer to illustration at right to connect the insulated duct to the hoods. An "Anti-Gust Intake Hood" should be installed in regions where a lot of snow is expected to fall.

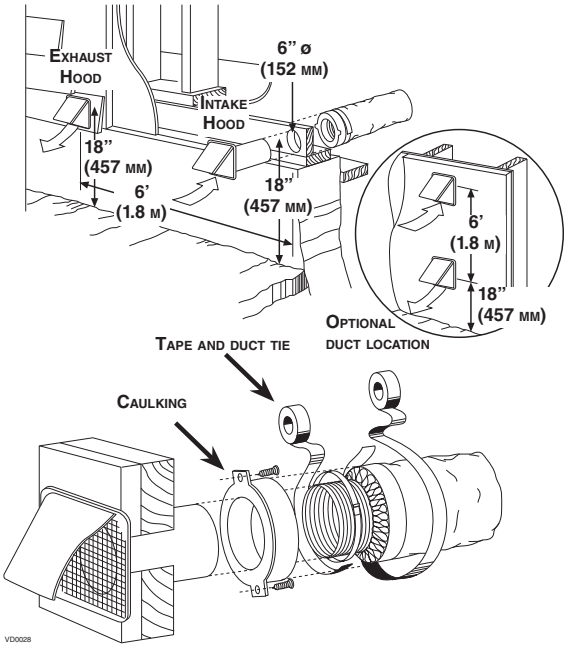

⚠WARNING

Make sure that both hoods are at least 18 inches above the ground and that the intake hood is at least 6 feet (1.8 m) away from any of the following:

- **Exhaust hood**
- **Dryer exhaust, high efficiency furnace vent, central vacuum vent**
- **Gas meter exhaust, gas barbecue-grill**
- **Any exhaust from a combustion source**
- **Garbage bin and any other source of contamination**

6.5 Connecting the ducts to the Unit

CAUTION

- **If ducts have to go through an unconditioned space (e.g.: attic), always use insulated ducts.**
- **Make sure the vapor barrier on the insulated ducts does not tear during installation to avoid condensation within the ducts.**
- **Do not use screws to connect rigid ducts to the ports.**

Insulated flexible ducts

Use the following procedure to connect the insulated flexible ducts to the cold side ports (stale air to outdoors and fresh air from outdoors).

1. Pull back the insulation to expose the flexible duct and place the flexible duct **over inner port ring**.
2. Install good quality **aluminum duct tape** on the flexible duct to prevent water leakage.
3. Attach the flexible duct to the port using a tie wrap.
4. Pull the insulation over the joint and tuck it **between the inner and outer rings** of the double collar.
5. Pull down the vapor barrier (shaded part in illustrations below) **over the outer ring** to cover it completely. Fasten the vapor barrier in place using the port strap (included in parts bag). To do so, insert one collar pin through the vapor barrier and first strap hole, then insert the other collar pin through the vapor barrier and center strap hole and close the loop by inserting the first collar pin in the last strap hole.

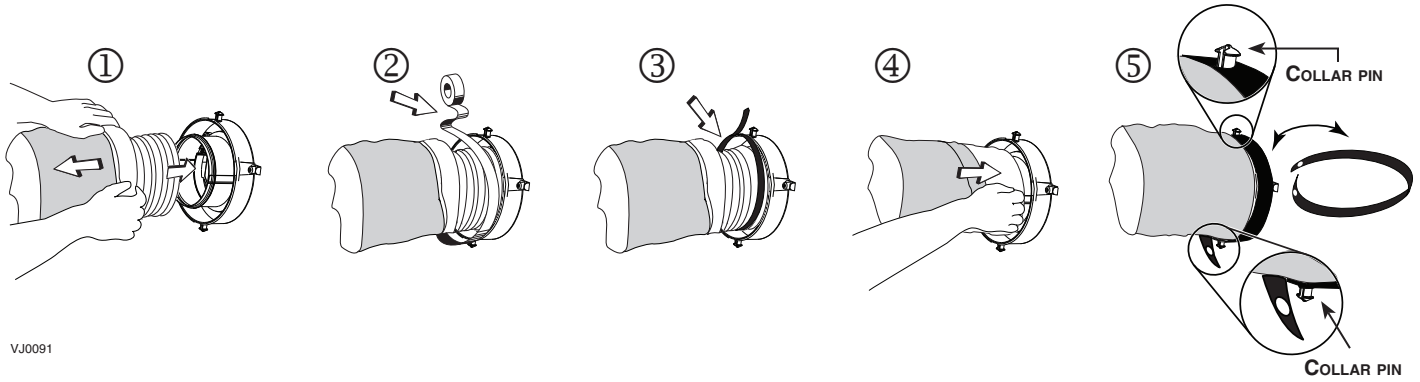

VJ0091

Rigid ducts

To prevent water leakage from ducts, use good quality aluminum duct tape to connect the rigid ducts to the ports. Do not use screws.

Make sure that both balancing dampers are left in a fully open position before connecting the **Fresh air to building port** and **Stale air from building port** (as shown in illustration at right).

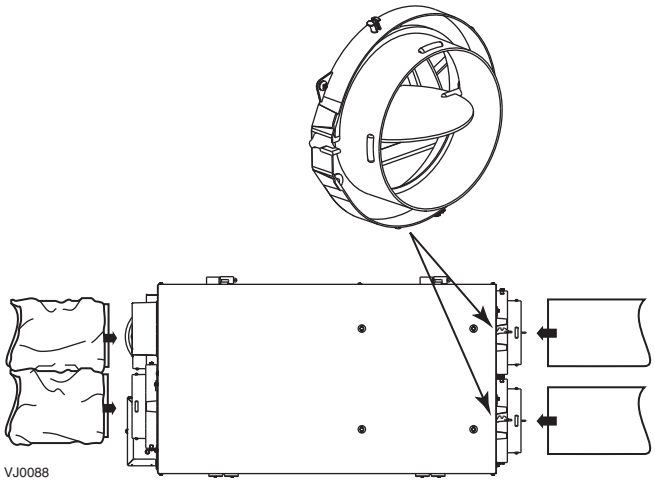

VJ0088

6.6 Connecting the Drain

1. Cut 2 sections of plastic tubing of at least 12” each.
2. Connect each one of them to the inner drain fittings located under the unit.
3. Join their other ends to the "T" junction and remaining tubing as illustrated. This will prevent the unit from drawing unpleasant odors from the drain source.

FOR **HRV SOLO 1.5ES** AND **HRV SOLO 2.0ES** UNITS ONLY:

4. Insert both drain plugs (included in parts bag) in the alternate drain fittings located on top of the unit.

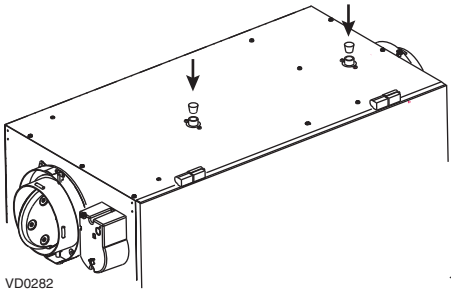
VD0282

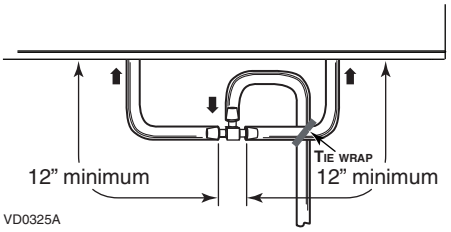

VD0325A

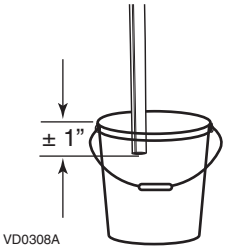

VD0308A

7. CONTROLS

7.1 Setting Extended Defrost

CAUTION

For HRV Solo 1.5ES and HRV SOLO2.0ES units only: when installed in reverse postion (upside down) in a cold area where outside temperature could drop below -20°C (-4°F) for more than 5 days in a row, the unit must always be set in extended defrost.

These units are factory set to normal defrost. In cold areas, it may be necessary to setup extended defrost. To do so, during the first 5 seconds of the booting sequence, while the integrated control LED is GREEN, press on the integrated push button (about 3 seconds) until the LED turns AMBER.

7.2 Electrical Connection to Optional Wall Control

⚠WARNING

Always disconnect the unit before making any connections. Failure in disconnecting power could result in electrical shock or damage of the wall control or electronic module inside the unit.

CAUTION

Never install more than one optional main wall control per unit. Make sure that the wires do not short-circuit between themselves or by touching any other components on the wall control. Avoid poor wiring connections. To reduce electrical interference (noise) potential, do not run wall control wiring next to control contactors or near light dimming circuits, electrical motors, dwelling/building power or lighting wiring, or power distribution panel.

- Use the terminal connector included in the installation kit to perform the electrical connection for main and optional wall controls.
- Make sure all wires are correctly inserted in their corresponding holes in the terminal block. A wire is correctly inserted when its orange receptacle is lower than another one without wire. On picture below, wire **A** is correctly inserted, but wire **B** is not.

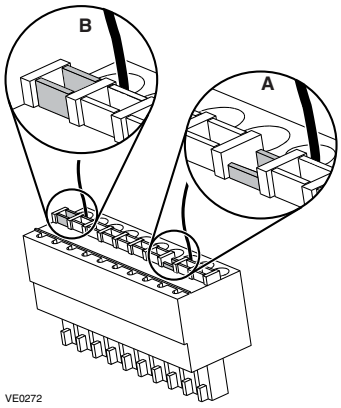

- Once the wall control(s) connections have been made, insert the terminal connector in the electrical compartment.
- If an optional main control is being installed, make sure that the unit is set to OFF using the integrated push-button.

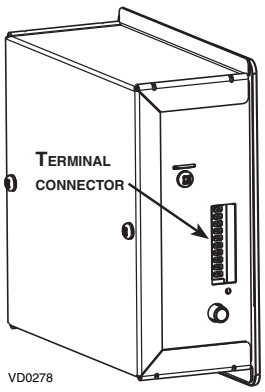

Use the chart below to verify compatibility with the optional controls before making any connection.

	Main Controls	Auxiliary Controls
HRV CONSTRUCTO 1.5ES HRV CONSTRUCTO 2.0ES	• Deco-Touch • Lite-Touch Constructo • Constructo	• Dehumidistat • 20-minute lighted push button • 60-minute crank timer
HRV SOLO 1.5ES HRV SOLO 2.0ES	• Altitude • Deco-Touch • Lite-Touch Constructo • Simple Touch Constructo • Constructo	• Dehumidistat • 20/40/60-minute push-button timer • 60-minute crank timer
HRV NOVOFIT 1.5ES HRV NOVOFIT 2.0ES	• Altitude • Deco-Touch	• 20/40/60-minute push-button timer • 60-minute crank timer
100H 200H	• Deco-Touch • Lite-Touch Bronze • Bronze	• Dehumidistat • 20-minute lighted push button • 60-minute crank timer
NOVO+ 100H NOVO+ 200H	• Platinum • Deco-Touch	• 20/40/60-minute push-button timer • 60-minute crank timer

7.2.1 Altitude or Platinum

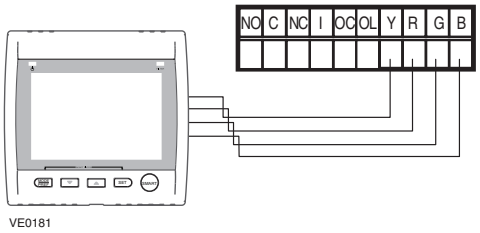

7.2.2 Deco-Touch

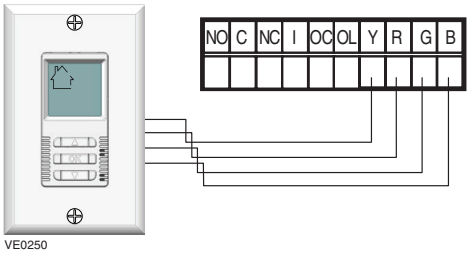

7.2.3 Lite-Touch Constructo, Simple-Touch Constructo or Lite-Touch Bronze

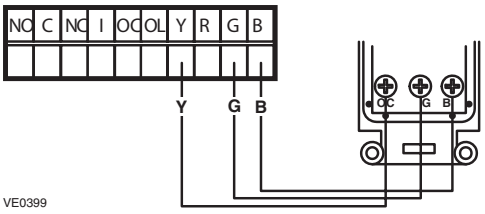

7.2.4 Constructo or Bronze

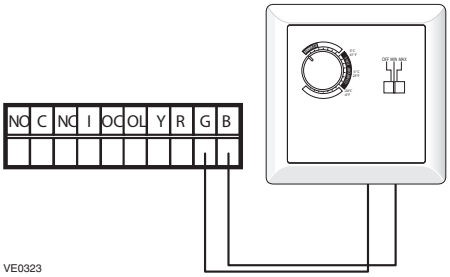

7.2.5 Optional Auxiliary Controls

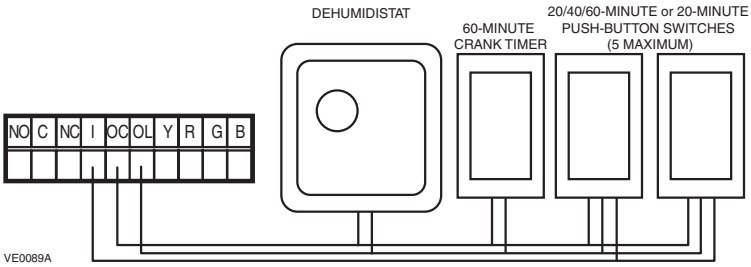

8. CONNECTION TO THE FURNACE

⚠WARNING

Never connect a 120-volt AC circuit to the terminals of the furnace interlock (standard wiring). Only use the low voltage class 2 circuit of the furnace blower control.

For a furnace connected to a cooling system:

On some older thermostats, energizing the "R" and "G" terminals at the furnace has the effect of energizing "Y" at the thermostat and thereby turning on the cooling system. If you identify this type of thermostat, you must use the ALTERNATE FURNACE INTERLOCK WIRING.

STANDARD FURNACE INTERLOCK WIRING

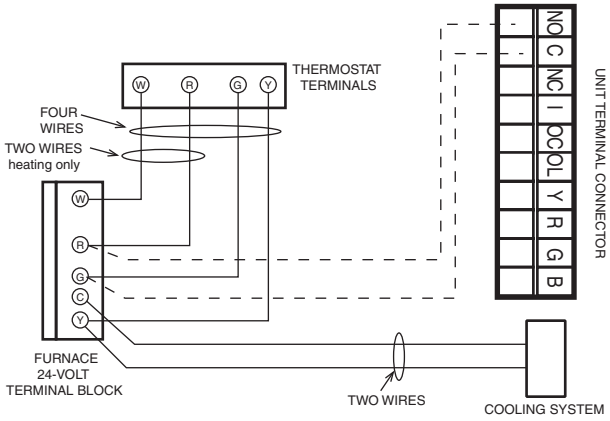

ALTERNATE FURNACE INTERLOCK WIRING

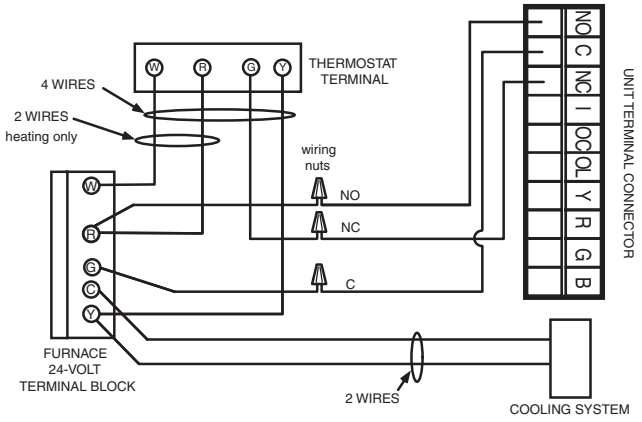

VE0108A

9. BALANCING THE UNIT

Preparation

Follow these steps to ensure accurate measurements:

- Seal all the ductwork with tape. Close all windows and doors.
- Turn off all exhaust devices such as range hood, dryer and bathroom fans.
- Make sure the balancing dampers are fully open.
- If the installation is in any way connected to the ductwork of the cold air return of a furnace/air handler, make sure that the furnace/air handler blower is ON. If not, leave furnace/air handler blower OFF.
- If the outside temperature is below 0°C/32°F, make sure the unit is not running in defrost while balancing by waiting 10 minutes after plugging the unit in.
- Set the unit to high speed.

Balancing Procedure

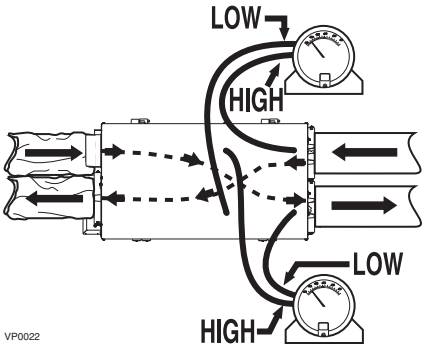

1. Place the magnehelic gauge on a level surface and adjust it to zero.
2. Connect tubing from gauge to EXHAUST airflow pressure taps (see diagram on unit door).
3. Be sure to connect the tubes to their appropriate high/low fittings. If the gauge drops below zero, reverse the tubing connections.
4. Note the CFM value from balancing chart on the unit.
5. Repeat steps 3 and 4, but to FRESH airflow pressure taps.
6. Using the appropriate adjustable balancing damper, lower the highest value so it matches the lowest value. A difference up to ±10 cfm is acceptable.
7. Secure both dampers in place with a fastening screw (included in the hardware kit).
8. Write the required airflow information on a label and stick it near the unit for future reference (date, maximum speed air flows, your name, phone number and business address).

10. SERVICE PARTS

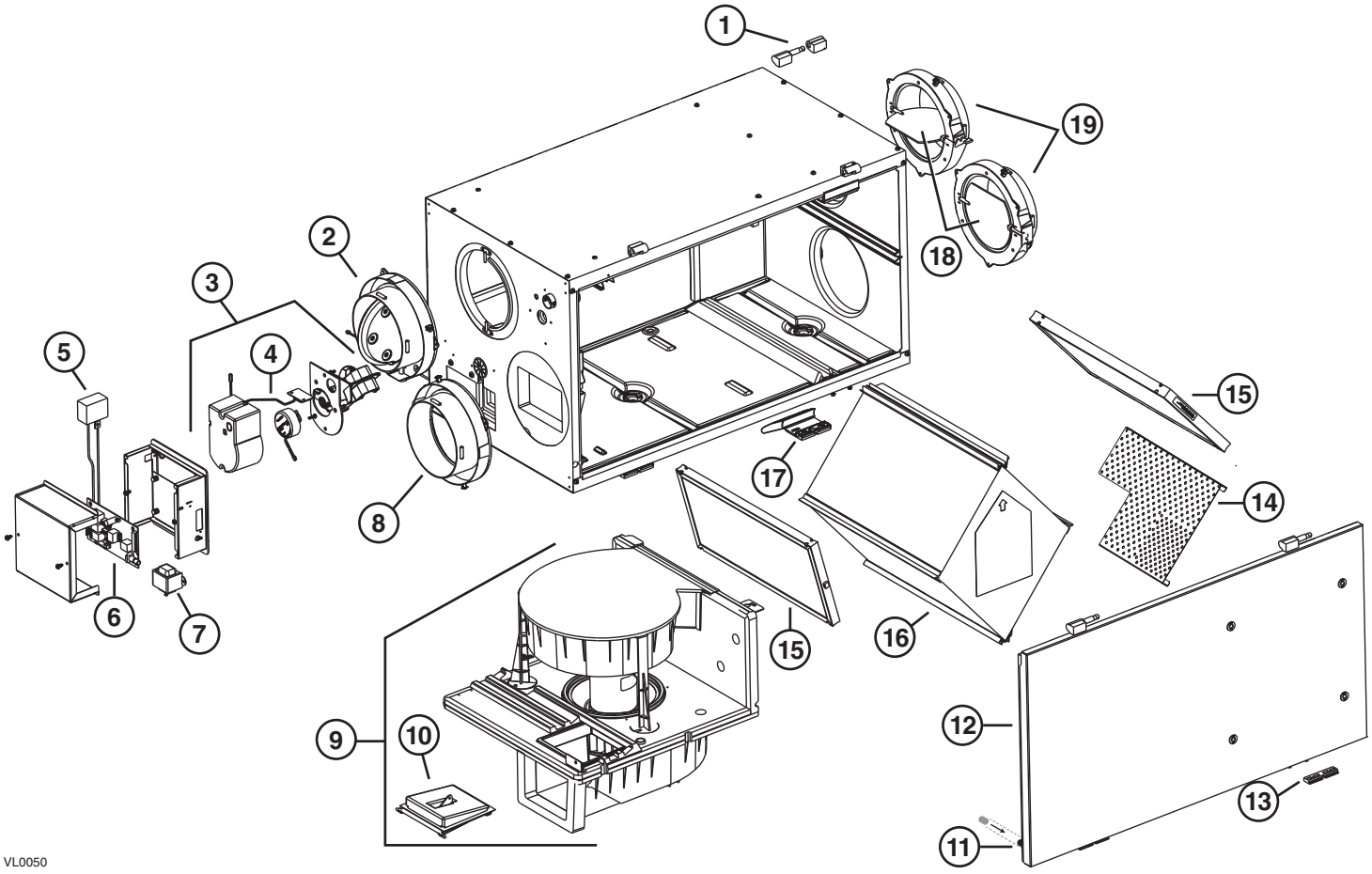

Item	Description	Part no.	HRV Constructo 1.5ES 46110	HRV Constructo 2.0ES 47110	HRV Solo 1.5ES 46720	HRV Solo 2.0ES 47720	HRV Novofit 1.5ES 46121	HRV Novofit 2.0ES 47121	100H 1601706	200H 1601708	NOVO+ 100H 1601717	NOVO+ 200H 1601719
1	Hinge assembly kit	13036	1	1	1	1	1	1	1	1	1	1
2	Damper supply port assembly	17245	1	1	1	1	1	1	1	1	1	1
3	Damper system actuator (incl. no. 4)	17235	1	1	1	1	1	1	1	1	1	1
4	Thermistor kit	17242	1	1	1	1	1	1	1	1	1	1
5	Capacitor 7.5 µF	17240	1	1	1	1	1	1	1	1	1	1
6	Electronic board	60809	1	1	1				1	1		
		60810			1	1	1	1			1	1
7	Transformer	17244	1	1	1	1	1	1	1	1	1	1
8	Double collar port	60818	1	1	1	1	1	1	1	1	1	1
9	Blower assembly (incl. no. 10)	60804	1		1		1		1		1	
		60805		1		1		1		1		1
10	Square damper kit	17243	1	1	1	1	1	1	1	1	1	1
11	Magnet switch	19060	1	1	1	1	1	1	1	1	1	1
12	Door assembly (incl. hinges and latches)	60797	1	1	1	1	1	1				
		60815							1	1	1	1
13	Door latches (keeper) (2)	00887	1	1	1	1	1	1	1	1	1	1
	and screws (4)	00601	1	1	1	1	1	1	1	1	1	1
14	Diffuser	60822	1	1	1	1	1	1	1	1	1	1
15	Filter kit	60800	1	1	1	1	1	1	1	1	1	1
16	Core	60802	1		1		1		1	1		
		60803		1		1		1			1	1
17	Door latches (2)	05960	1	1	1	1	1	1	1	1	1	1
	and screws (4)	00601	1	1	1	1	1	1	1	1	1	1
18	Balancing damper	02253	1	1	1	1	1	1	1	1	1	1
19	Balancing double collar port	02256	1	1	1	1	1	1	1	1	1	1
*	Terminal connector	16416	1	1	1	1	1	1	1	1	1	1
*	Hardware kit	20510	1	1			1	1	1	1	1	1
		20606			1	1						

* Not shown.

Replacement parts and repairs

In order to ensure your ventilation unit remains in good working condition, you must use the manufacturer's genuine replacement parts only. The manufacturer's genuine replacement parts are specially designed for each unit and are manufactured to comply with all the applicable certification standards and maintain a high standard of safety. Any third party replacement part used may cause serious damage and drastically reduce the performance level of your unit, which will result in premature failing. The manufacturer also recommends contacting a certified service depot for all replacement parts and repairs.

11. WIRING DIAGRAM

⚠WARNING

- **Risk of electric shocks. Before performing any maintenance or servicing, always disconnect the unit from its power source.**
- **This product is equipped with an overload protection (fuse). A blown fuse indicates an overload or a short-circuit situation. If the fuse blows, unplug the product and check the polarity and voltage output from the outlet. Replace the fuse as per the servicing instructions (refer to wiring diagram for proper fuse rating) and verify the product. If the replaced fuse blows, it may be a short-circuit and the product must be discarded or returned to an authorized service center for examination and/or repair.**

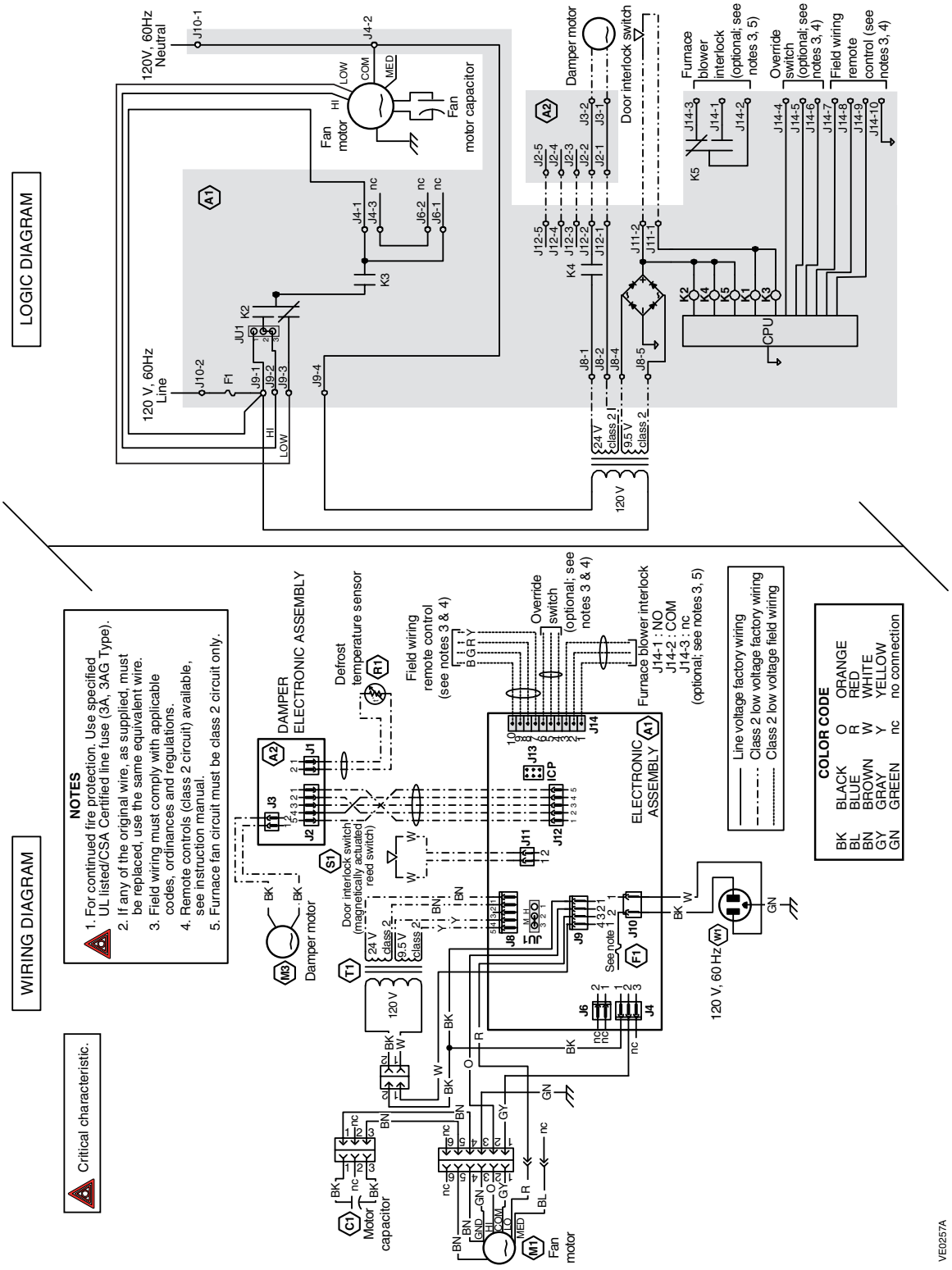

12. TROUBLESHOOTING

If the integrated LED of the unit is flashing, the unit sensors detected a problem. See the table below to know more about the nature of the problem.

LED Signal	Error Type	Action
LED flashes GREEN (double blink)	Thermistor error	Replace the thermistor kit.
LED flashes AMBER	Damper error	Go to page 18 "Unit does dot work".

⚠WARNING

A few diagnosis procedures may require the unit to be in operation while proceeding. Open the unit door and bypass its magnetic switch by putting the door white magnet on it. Be careful with moving and/or live parts.

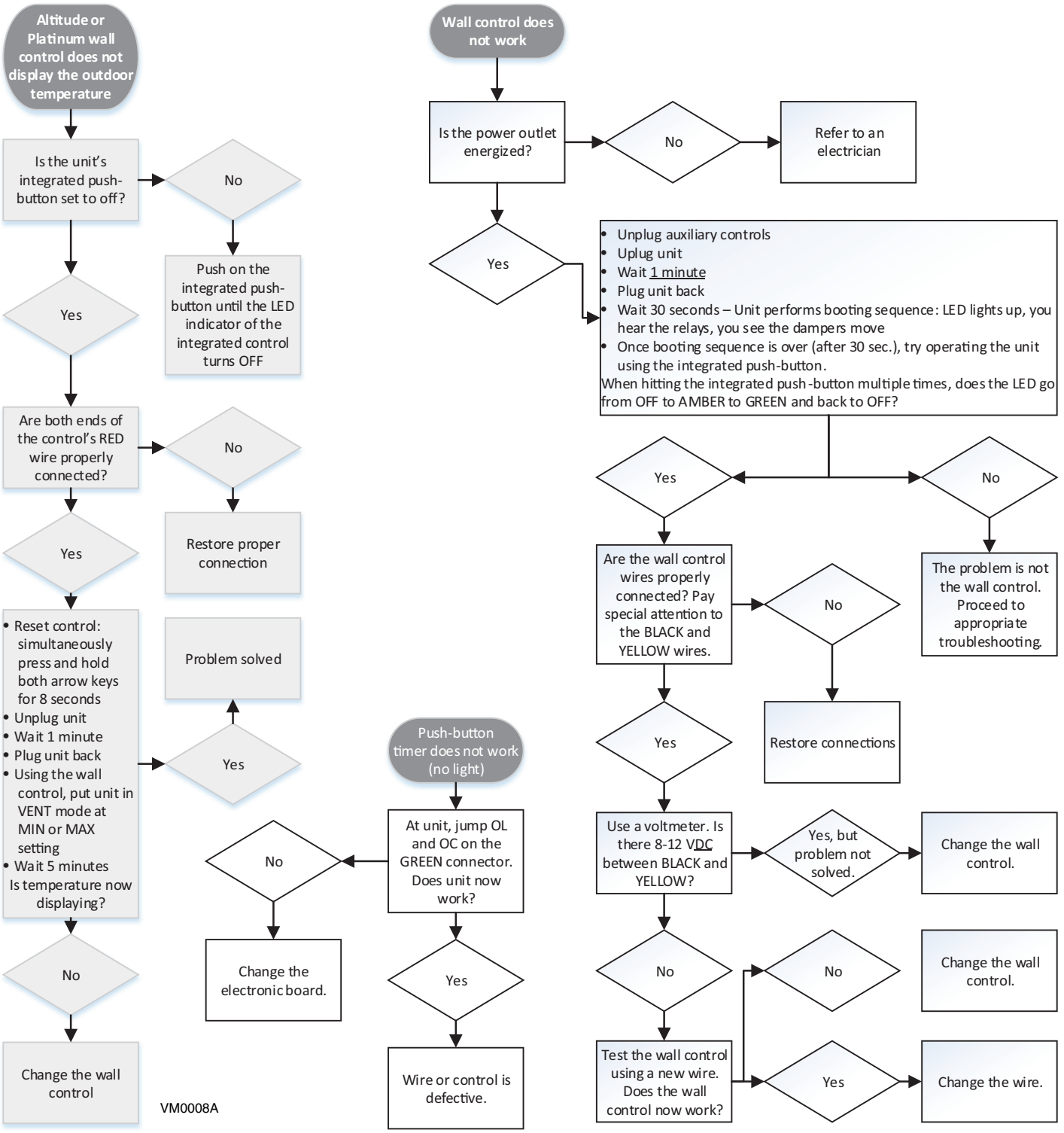

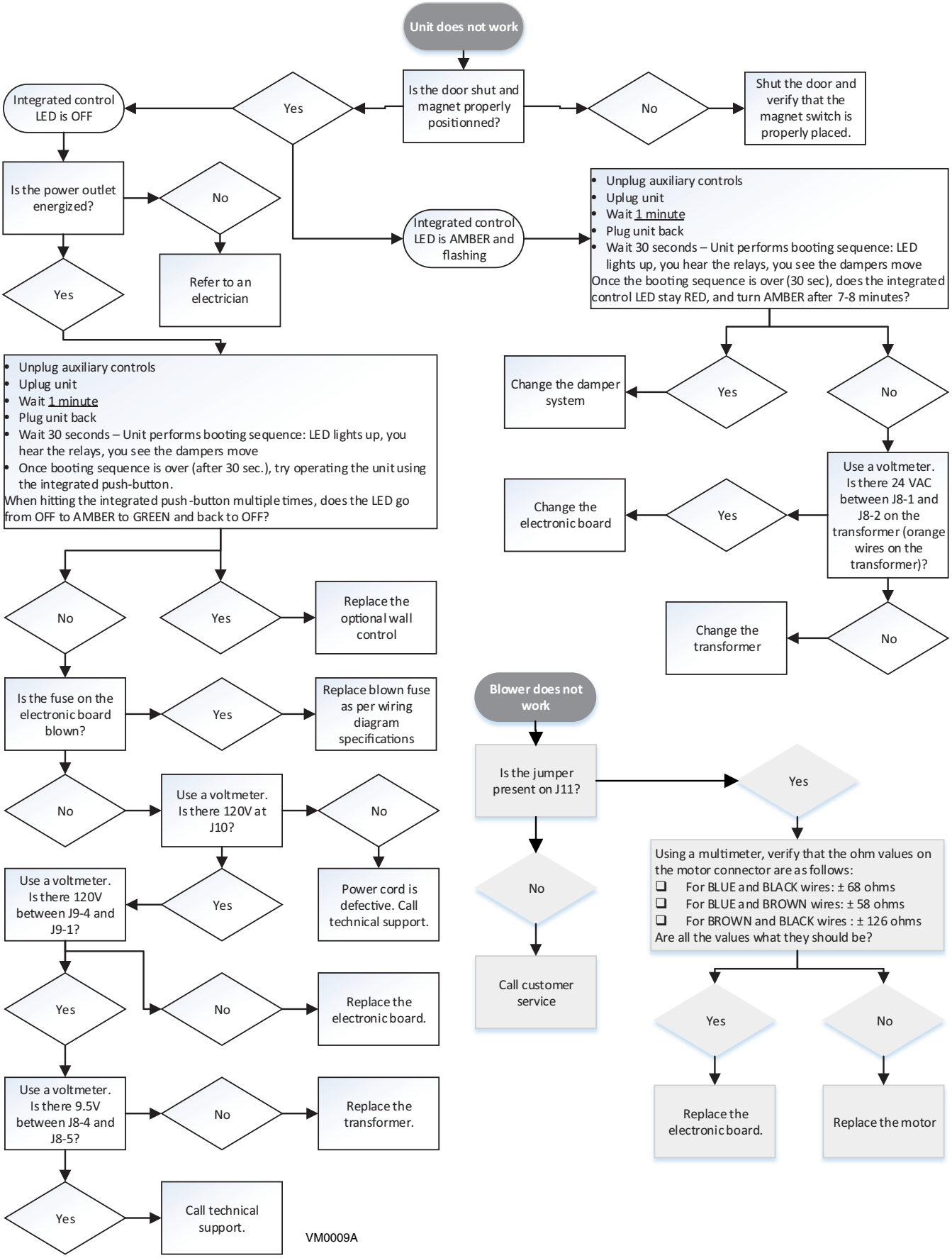

Service technicians only: If you require assistance or have questions after performing the following troubleshooting, call :

HRV CONSTRUCTO 1.5ES HRV CONSTRUCTO 2.0ES	HRV SOLO 1.5ES HRV SOLO 2.0ES	HRV NOVOFIT 1.5ES HRV NOVOFIT 2.0ES		1-800-649-0372
100H	200H	NOVO+ 100H	NOVO+ 200H	1-888-908-2633

4

Mécanique Nordique
Plumbing
Heating
Ventillation
mecanique.nordique@hotmail.com

1255 Rue J.A.Bombardier
Lévis, Québec
G7A 2P4
Téléphone: 418-496-1109
Télécopieur: 418-496-3803

REVIEWED BY CONTRACTOR
Kudlik Construction Ltd.
NAME: Sandra Rousseau P.Eng
DATE: Jun 11, 2018

IQALUIT WWTP UPGRADE

DRAWING FOR APPROVAL

Ingineer : NUNAMI STANTEC

DRAWING #: AD-004R

Section 23 33 15
Article PART 2
Plans M-402 M-503 M-801
Application : MOTORIZED DAMPER & BACK DRAF DAMPER
Brand : TAMCO
Model : 1000 7000 9000
Revised # : 1
Supplyer : Cometal

Pages incl. 11
Date : **2018-06-11**
By : **Mécanique Nordique Inc.**

Stantec
☐ Reviewed
☒ Reviewed as Modified
☐ Revise and Resubmit
☐ Not Reviewed

Boris Hoefs 6/14/2018
By: _____

This review by Stantec Architecture Ltd. is for the sole purpose of ascertaining conformance with the general design concept. This review shall not mean that Stantec Architecture Ltd. approves the detail design inherent in the shop drawings, responsibility for which shall remain with the Contractor submitting same, and such review shall not relieve the Contractor of his responsibility for errors or omissions in the shop drawings or of his responsibility for meeting all requirements of the Contract Documents. The Contractor is responsible for dimensions to be confirmed and correlated at the job site, for information that pertains solely to fabrication processes or to techniques of construction and installation and for co-ordination of the work of all subtrades.
STANTEC ARCHITECTURE LTD. (PC-1449)

Cometal STD
672, boul. Lemire
Drummondville (Québec), J2C 7W9
Tel: 819-472-3838
Fax: 819-472-0390

REFERENCE
R20081781
Quote Date: 6/11/2018

Project: IQUALUIT WASTE WATER PLANT

OK **Item** **1**

A (Width) and B (Height) are opening or duct dimensions

Qty	1				
A x B :	1,500	x	1,200	Cfg:	1F
Series:	9000 BF				
Option :	EXTREME COLD TEMP				
Profile:	STANDARD				
Blade Type:	OPPOSED				
Mount Type:	FLANGED TO				
Tag:	CD-1				

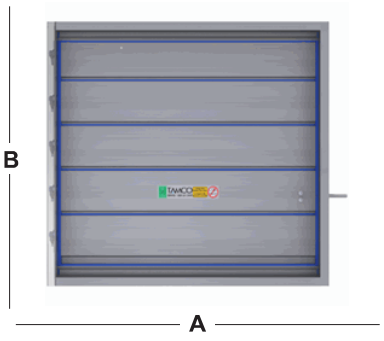

OK **Item** **2**

A (Width) and B (Height) are opening or duct dimensions

Qty	1				
A x B :	1,200	x	900	Cfg:	1F
Series:	9000 BF				
Option :	EXTREME COLD TEMP				
Profile:	STANDARD				
Blade Type:	OPPOSED				
Mount Type:	FLANGED TO				
Tag:	CD-2				

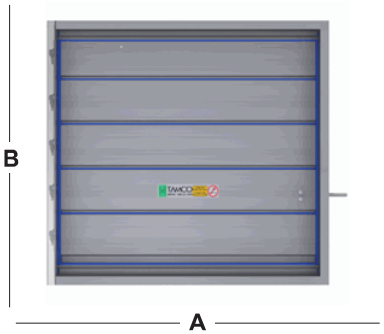

OK **Item** **3**

A (Width) and B (Height) are opening or duct dimensions

Qty	1				
A x B :	300	x	450	Cfg:	1F
Series:	9000 BF				
Option :	EXTREME COLD TEMP				
Profile:	STANDARD				
Blade Type:	OPPOSED				
Mount Type:	FLANGED TO				
Tag:	CD-3				

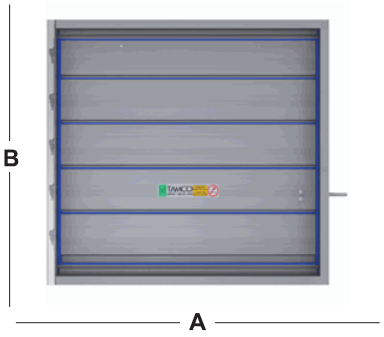

Contact: DAVE FOURNIER
Tel: 819-472-3838
Fax: 819-472-0390

Cometal STD
672, boul. Lemire
Drummondville (Québec), J2C 7W9
Tel: 819-472-3838
Fax: 819-472-0390

REFERENCE
R20081781
Quote Date: 6/11/2018

Project: IQUALUIT WASTE WATER PLANT

OK **Item** **4**

A (Width) and B (Height) are opening or duct dimensions

Qty	1				
A x B :	300	x	450	Cfg:	1F
Series:	1000				
Option :					
Profile:	STANDARD				
Blade Type:	OPPOSED				
Mount Type:	FLANGED TO				
Tag:	CD-4				

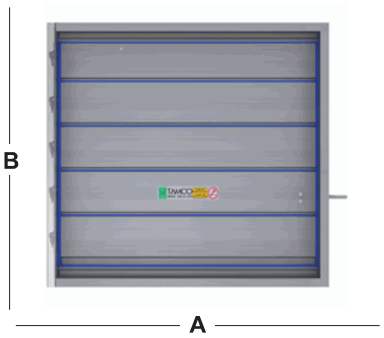

OK **Item** **5**

A (Width) and B (Height) are opening or duct dimensions

Qty	1				
A x B :	450	x	450	Cfg:	1F
Series:	9000 BF				
Option :	EXTREME COLD TEMP				
Profile:	STANDARD				
Blade Type:	OPPOSED				
Mount Type:	FLANGED TO				
Tag:	CD-5				

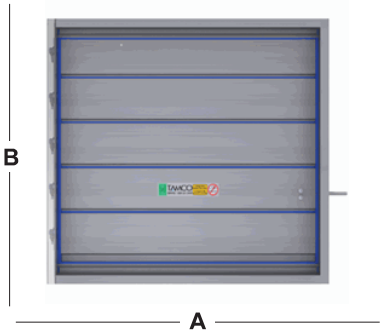

OK **Item** **6**

A (Width) and B (Height) are opening or duct dimensions

Qty	1				
A x B :	450	x	450	Cfg:	1F
Series:	1000				
Option :					
Profile:	STANDARD				
Blade Type:	OPPOSED				
Mount Type:	FLANGED TO				
Tag:	CD-6				

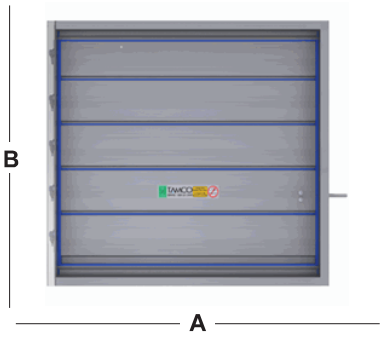

Contact: DAVE FOURNIER
Tel: 819-472-3838
Fax: 819-472-0390

TAMCO Tel: 1-800-561-3449
Fax: 1-800-668-8476

www.tamcodampers.com

Cometal STD
672, boul. Lemire
Drummondville (Québec), J2C 7W9
Tel: 819-472-3838
Fax: 819-472-0390

REFERENCE
R20081781
Quote Date: 6/11/2018

Project: IQUALUIT WASTE WATER PLANT

OK **Item** **7**

A (Width) and B (Height) are opening or duct dimensions

Qty	1				
A x B :	450	x	450	Cfg:	1F
Series:	9000 BF				
Option :	EXTREME COLD TEMP				
Profile:	STANDARD				
Blade Type:	OPPOSED				
Mount Type:	FLANGED TO				
Tag:	CD-7				

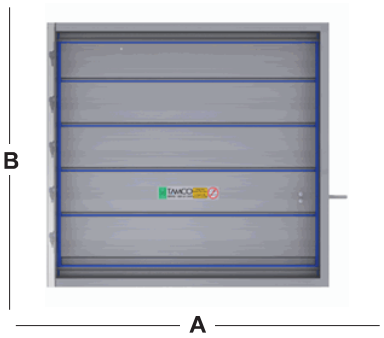

OK **Item** **8**

A (Width) and B (Height) are opening or duct dimensions

Qty	1				
A x B :	200	x	150	Cfg:	1FS
Series:	9000 BF				
Option :	EXTREME COLD TEMP				
Profile:	STANDARD				
Blade Type:	OPPOSED				
Mount Type:	FLANGED TO				
Tag:	CD-8				

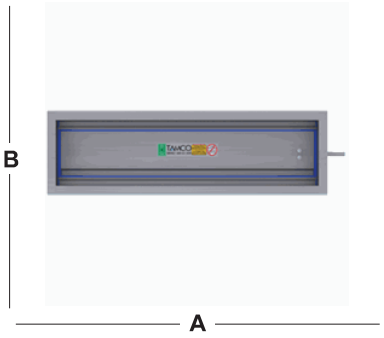

OK **Item** **9**

A (Width) and B (Height) are opening or duct dimensions

Qty	1				
A x B :	450	x	450	Cfg:	1F
Series:	9000 BF				
Option :	EXTREME COLD TEMP				
Profile:	STANDARD				
Blade Type:	OPPOSED				
Mount Type:	FLANGED TO				
Tag:	CD-9				

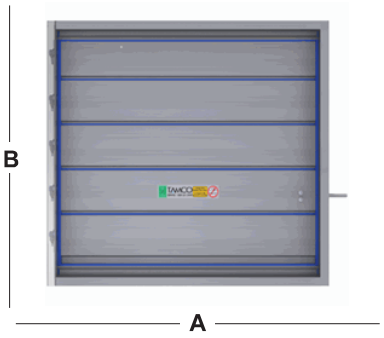

Contact: DAVE FOURNIER
Tel: 819-472-3838
Fax: 819-472-0390

TAMCO Tel: 1-800-561-3449
Fax: 1-800-668-8476

www.tamcodampers.com

Cometal STD
672, boul. Lemire
Drummondville (Québec), J2C 7W9
Tel: 819-472-3838
Fax: 819-472-0390

REFERENCE
R20081781
Quote Date: 6/11/2018

Project: IQUALUIT WASTE WATER PLANT

OK **Item 10**

A (Width) and B (Height) are opening or duct dimensions

Qty	1				
A x B :	200	x	600	Cfg:	1F
Series:	9000 BF				
Option :	EXTREME COLD TEMP				
Profile:	STANDARD				
Blade Type:	OPPOSED				
Mount Type:	FLANGED TO				
Tag:	CD-10				

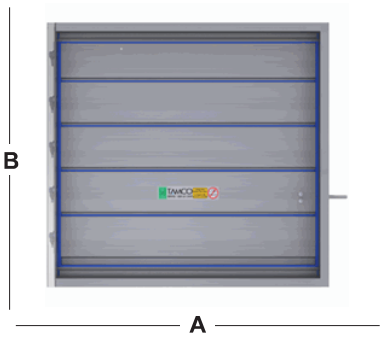

OK **Item 11**

A (Width) and B (Height) are opening or duct dimensions

Qty	1				
A x B :	1,200	x	150	Cfg:	1FS
Series:	9000 BF				
Option :	EXTREME COLD TEMP				
Profile:	STANDARD				
Blade Type:	OPPOSED				
Mount Type:	FLANGED TO				
Tag:	CD-11 See Item 17 for CD-12				

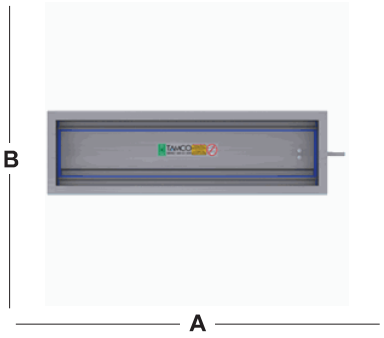

OK **Item 12**

A (Width) and B (Height) are opening or duct dimensions

Qty	1				
A x B :	1,050	x	1,200	Cfg:	1F
Series:	1000				
Option :					
Profile:	STANDARD				
Blade Type:	OPPOSED				
Mount Type:	FLANGED TO				
Tag:	CD-13				

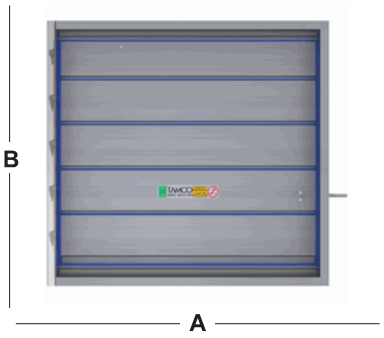

Contact: DAVE FOURNIER
Tel: 819-472-3838
Fax: 819-472-0390

Cometal STD
672, boul. Lemire
Drummondville (Québec), J2C 7W9
Tel: 819-472-3838
Fax: 819-472-0390

REFERENCE
R20081781
Quote Date: 6/11/2018

Project: IQUALUIT WASTE WATER PLANT

OK **Item** **13**

Qty	1				
A x B :	1,050	x	1500	Cfg:	1F
Series:	9000 BF				
Option :	EXTREME COLD TEMP				
Profile:	STANDARD				
Blade Type:	OPPOSED				
Mount Type:	FLANGED TO				
Tag:	CD-14				

A (Width) and B (Height) are opening or duct dimensions

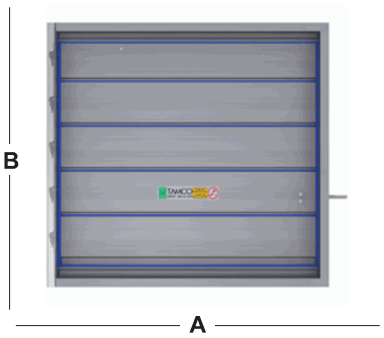

Item **14** CANCELLER

Qty	1				
A x B :	1,200	x	150	Cfg:	1FS
Series:	9000 BF				
Option :	EXTREME COLD TEMP				
Profile:	STANDARD				
Blade Type:	OPPOSED				
Mount Type:	FLANGED TO				
Tag:	CD-19 See Item 18 for CD-20				

A (Width) and B (Height) are opening or duct dimensions

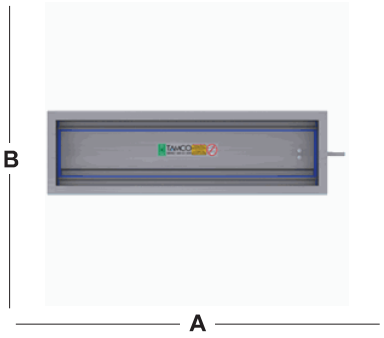

Item **15** CANCELLER

Qty	1				
A x B :	1,200	x	750	Cfg:	1F
Series:	1000				
Option :					
Profile:	STANDARD				
Blade Type:	OPPOSED				
Mount Type:	FLANGED TO				
Tag:	CD-21				

A (Width) and B (Height) are opening or duct dimensions

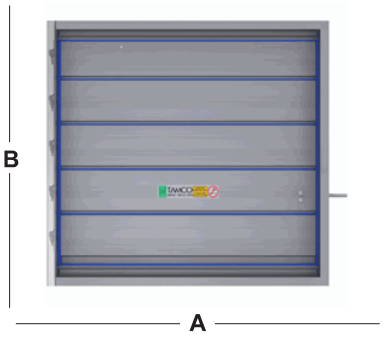

Contact: DAVE FOURNIER
Tel: 819-472-3838
Fax: 819-472-0390

Cometal STD
672, boul. Lemire
Drummondville (Québec), J2C 7W9
Tel: 819-472-3838
Fax: 819-472-0390

REFERENCE
R20081781
Quote Date: 6/11/2018

Project: IQUALUIT WASTE WATER PLANT

OK **Item** **16**

A (Width) and B (Height) are opening or duct dimensions

Qty	1				
A x B :	1,200	x	750	Cfg:	1F
Series:	9000 BF				
Option :	EXTREME COLD TEMP				
Profile:	STANDARD				
Blade Type:	OPPOSED				
Mount Type:	FLANGED TO				
Tag:	CD-22				

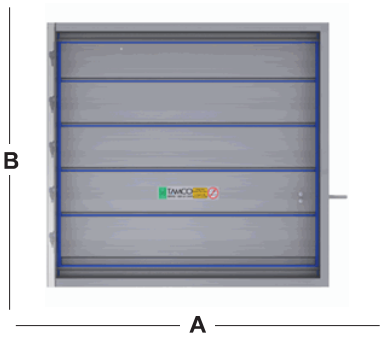

OK **Item** **17**

A (Width) and B (Height) are opening or duct dimensions

Qty	1				
A x B :	1,200	x	1,200	Cfg:	1F
Series:	9000 BF				
Option :	EXTREME COLD TEMP				
Profile:	STANDARD				
Blade Type:	OPPOSED				
Mount Type:	FLANGED TO				
Tag:	CD-12 See Item 11 for CD-11				

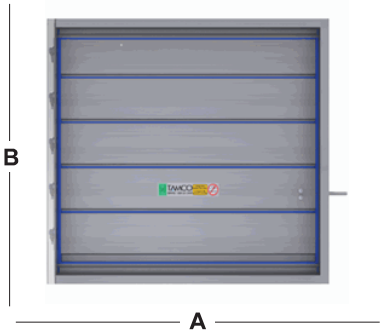

OK **Item** **18**

A (Width) and B (Height) are opening or duct dimensions

Qty	1				
A x B :	1,200	x	750	Cfg:	1F
Series:	9000 BF				
Option :	EXTREME COLD TEMP				
Profile:	STANDARD				
Blade Type:	OPPOSED				
Mount Type:	FLANGED TO				
Tag:	CD-20 ~~See Item 14 for CD-19~~				

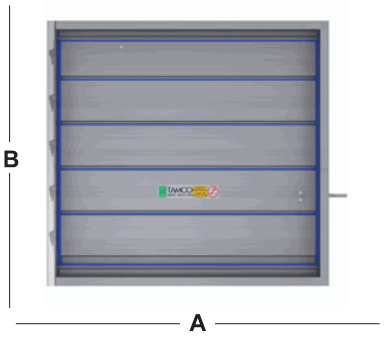

Contact: DAVE FOURNIER
Tel: 819-472-3838
Fax: 819-472-0390

TAMCO Tel: 1-800-561-3449
Fax: 1-800-668-8476

www.tamcodampers.com

Cometal STD
672, boul. Lemire
Drummondville (Québec), J2C 7W9
Tel: 819-472-3838
Fax: 819-472-0390

REFERENCE
R20081781
Quote Date: 6/11/2018

Project: IQUALUIT WASTE WATER PLANT

OK

Item	**19**				
Qty	1				
A x B :	250	x	153	Cfg:	1C
Series:	7000				
Option :					
Profile:	STANDARD				
Blade Type:	HORIZONTAL				
Mount Type:	IN DUCT				
Tag:					

** Arrow indicates air direction **

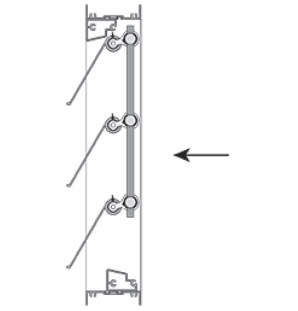

Structural supports for multiple-section damper assemblies are to be supplied and installed by the installing contractor.

Contact: DAVE FOURNIER
Tel: 819-472-3838
Fax: 819-472-0390

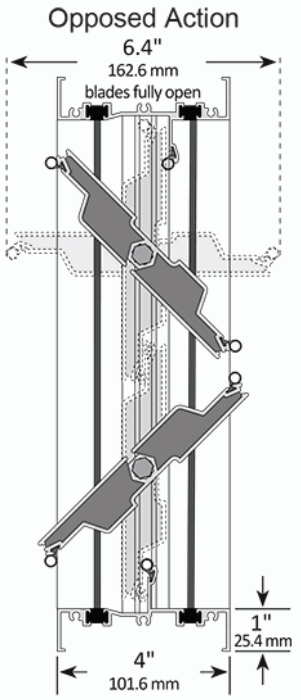

- Extruded aluminum (6063-T5) damper frame is not less than 0.080" (2.03 mm) in thickness. Damper frame is 4" (101.6 mm) deep x 1" (25.4 mm), with mounting flanges on both sides of frame.
- Entire frame is thermally broken by means of polyurethane resin pockets complete with thermal cuts.
- Blades are maximum 6" (152.4 mm) deep extruded aluminum (6063-T5) air-foil profiles, internally insulated with expanded polyurethane foam and thermally broken. Complete blade has an insulating factor of R-2.29 and a temperature index of 55 (tested to AAMA 1502.7 Test Method). All blades are symmetrically pivoted.
- Blade and frame seals are extruded, specially formulated silicone, for reduced air leakage at extreme cold temperatures. Silicone formula is the same as that used by NASA for its Aerospace program and retains flexibility to -100°F (-73°C). Blade and frame seals are secured in an integral slot within the aluminum extrusions and are mechanically fastened to prevent shrinkage and movement over the life of the damper.
- Bearings are composed of a Celcon inner bearing - fixed around a 7/16" (11.11 mm) aluminum hexagon blade pivot pin - rotating within a polycarbonate outer bearing inserted in the frame. This eliminates action between metal-to-metal or metal-to-plastic riding surfaces.
- Adjustable 7/16" (11.11 mm) hexagonal drive rod, U-bolt fastener, and hexagonal retaining nuts are zinc-plated steel. These provide a positive connection to blades and linkage.
- Aluminum and corrosion-resistant zinc-plated steel linkage hardware is installed in the frame side, complete with cup-point trunnion screws for a slip-proof grip.
- Dampers are designed for operation in temperatures ranging from -100°F (-73°C) to 212°F (100°C).
- Leakage Class 1A at 1 in w.g. (0.25 kPa) static pressure differential. Standard air leakage data is certified under the AMCA Certified Ratings Program.
- Dampers are custom made to required size, without blanking off free area. The blade stop is set at a fixed height and is a continuous and integral part of the top and bottom frames.
- Dampers selected with blade action as shown to the left.
- Dampers selected with install type as shown below.
- Installation of dampers must be in accordance with TAMCO's current on-line installation guidelines. (Printed installation guidelines are provided with each damper shipment, however all technical information available on TAMCO's web site at www.tamcodampers.com supersedes information contained within printed versions.)
- Intermediate structural support is required to resist applied pressure loads for dampers that consist of two or more sections in both height and width. (See TAMCO Aluminum Damper Installation Guidelines.)

FLANGED TO DUCT TYPE ▾

› Finished damper O.D. is 2" *(50.8 mm)* greater than opening width and height dimensions.

MINIMUM SECTION SIZE:	
4½"w x 4¼"h	*(115 mm x 108 mm)*
MAXIMUM SECTION SIZE:	
25 ft²	*(2.3 m²)*
60"w x 60"h or	*(1524 mm x 1524 mm) or*
48"w x 75"h	*(1220 mm x 1905 mm)*

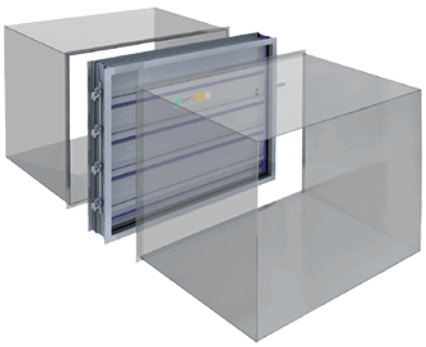

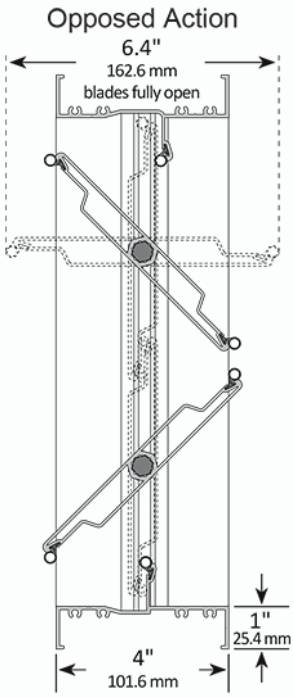

- Extruded aluminum (6063-T5) damper frame is not less than 0.080" (2.03 mm) in thickness. Damper frame is 4" (101.6 mm) deep x 1" (25.4 mm), with mounting flanges on both sides of frame.
- Blades are maximum 6" (152.4 mm) deep extruded aluminum (6063-T5) air-foil profiles. All blades are symmetrically pivoted.
- Blade seals are extruded EPDM. Frame seals are extruded silicone. Seals are secured in an integral slot within the aluminum extrusions. Blade and frame seals are mechanically fastened to prevent shrinkage and movement over the life of the damper.
- Bearings are composed of a Celcon inner bearing - fixed around a 7/16" (11.11 mm) aluminum hexagon blade pivot pin - rotating within a polycarbonate outer bearing inserted in the frame. This eliminates action between metal-to-metal or metal-to-plastic riding surfaces.
- Adjustable 7/16" (11.11 mm) hexagonal drive rod, U-bolt fastener, and hexagonal retaining nuts are zinc-plated steel. These provide a positive connection to blades and linkage.
- Aluminum and corrosion-resistant zinc-plated steel linkage hardware is installed in the frame side, complete with cup-point trunnion screws for a slip-proof grip.
- Dampers are designed for operation in temperatures ranging from -40°F (-40°C) to 212°F (100°C).
- Leakage Class 1A at 1 in w.g. (0.25 kPa) static pressure differential. Standard air leakage data is certified under the AMCA Certified Ratings Program.
- Dampers are custom made to required size, without blanking off free area. The blade stop is set at a fixed height and is a continuous and integral part of the top and bottom frames.
- Dampers selected with blade action as shown to the left.
- Dampers selected with install type as shown below.
- Installation of dampers must be in accordance with TAMCO's current on-line installation guidelines. (Printed installation guidelines are provided with each damper shipment, however all technical information available on TAMCO's web site at www.tamcodampers.com supersedes information contained within printed versions.)
- Intermediate structural support is required to resist applied pressure loads for dampers that consist of two or more sections in both height and width. (See TAMCO Aluminum Damper Installation Guidelines.)

FLANGED TO DUCT TYPE ▼

› For SP and NP Profiles, finished damper O.D. is 2" *(50.8 mm)* greater than opening width and height dimensions.

› For WP Profile, finished damper O.D. is 3.25" *(82.6 mm)* greater than opening width and height dimensions.

MINIMUM SECTION SIZE:	
4½"w x 4¼"h	*(115 mm x 108 mm)*
MAXIMUM SECTION SIZE:	
25 ft²	*(2.3 m²)*
60"w x 60"h or	*(1524 mm x 1524 mm) or*
48"w x 75"h	*(1220 mm x 1905 mm)*

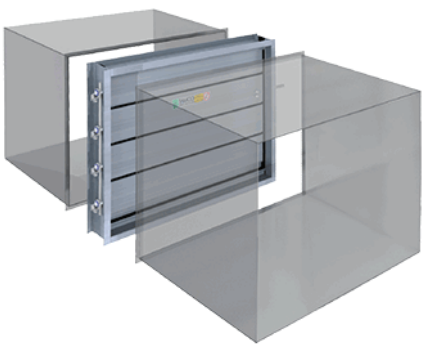

Leakage:	TAMCO Series 7000 comply with the International Energy Conservation Code (IECC) and ASHRAE 90.1 leakage requirements for non-motorized dampers.

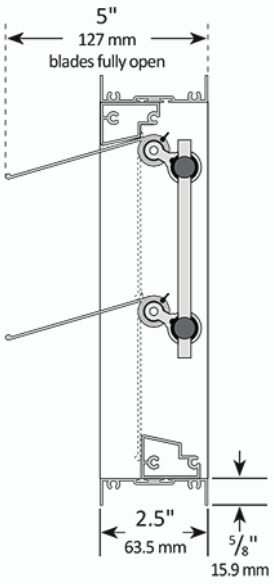

- Extruded aluminum (6063-T5) medium-duty backdraft damper frame is not less than 0.060" (1.52 mm) in thickness. Frame is 2.5" (63.5 mm) deep x 5/8" (15.9 mm), with mounting flanges on both sides of frame.
- Blades are extruded aluminum (6063-T5) profiles not less than 0.060" (1.52 mm) in thickness.
- Blade and frame seals are extruded silicone, secured in an integral slot within the aluminum extrusions. Seals are mechanically fastened to prevent shrinkage and movement over the life of the damper.
- Bearings are composed of 1/2" (12.7 mm) aluminum pivot points, rotating on Celcon bearings.
- Linkage system consists of hard aluminum alloy (6005-T6) crank arms fastened to aluminum pivot rods and doubly secured within a channel at the top of the blade. Large diameter 11/32" (8.73 mm) hard aluminum alloy (6005-T6) linkage rod connects the crank arms by means of a trunnion.
- Trunnions are zinc-plated steel. These provide a hard, smooth, and long-lasting rotating surface.
- Cup-point trunnion screw allows for a penetrating grip of the linkage rod. (Cup-point trunnion set screw creates a compression hard spot where it secures to the linkage rod.)
- Backdraft dampers are designed for operation in temperatures ranging from -40°F (-40°C) to 212°F (100°C).
- Air leakage for backdraft dampers with a width and height of 24" (610 mm) or greater does not exceed 6.93 cfm/ft² (35.20 l/s/m²) against 1 in. w.g. (0.25 kPa) differential static pressure. Air leakage for backdraft dampers with a width or height of less than 24" (610 mm) does not exceed 11.38 cfm/ft² (57.81 l/s/m²) against 1 in. w.g. (0.25 kPa) differential static pressure. Standard air leakage data is certified under the AMCA Certified Ratings Program.
- Medium-duty backdraft dampers are custom manufactured to required size, without blanking off free area.
- Medium-duty backdraft dampers selected with airflow direction as shown below.
- Medium-duty backdraft dampers selected with install type as shown below.
- Installation of medium-duty backdraft dampers must be in accordance with TAMCO's current on-line installation guidelines.
- Intermediate structural support is required to resist applied pressure loads for medium-duty backdraft dampers that consist of two or more sections in both height and width. (See TAMCO Medium-Duty Backdraft Damper Installation Guidelines.)
- Medium-duty backdraft dampers with dimensions greater than maximum section size will be manufactured in multiple sections. (See below for maximum section dimensions.) Multiple sections are not interlinked or connected. To install, each section must be individually fastened to a structural frame prepared on site. Jumpers and jackshafts are not available for multiple-section backdraft dampers.

INSTALLED IN DUCT TYPE ▾

› Finished damper O.D. is ¼" *(6.4 mm)* less than opening width and height dimensions.

MINIMUM SECTION SIZE:	
6"w x 6"h	*(153 mm x 153 mm)*
MAXIMUM SECTION SIZE:	
12.15 ft²	*(1.1 m²)*
36"w x 48.625"h	*(915 mm x 1235 mm)*

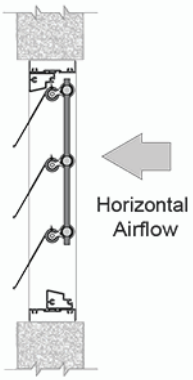

5

REVIEWED BY CONTRACTOR
Kudlik Construction Ltd.
NAME: Sandra Rousseau P.Eng
DATE: Jun 11, 2018

Mécanique Nordique
Plumbing
Heating
Ventillation
mecanique.nordique@hotmail.com

1255 Rue J.A.Bombardier
Lévis, Québec
G7A 2P4
Téléphone: 418-496-1109
Télécopieur: 418-496-3803

IQALUIT WWTP UPGRADE

DRAWING FOR APPROVAL

Ingineer : NUNAMI STANTEC

DRAWING #: AD-005R

Section	23 13 23
Article	PART 2
Plans	M-802
Application	: Oil Tanks
Brand	: Clemmer
Model	: Custom
Revised #	: 1
Supplyer	: Steelcraft

Pages incl.	3
Date	: **2018-06-11**
By	: **Mécanique Nordique Inc.**

MATERIAL OF CONSTRUCTION									
Primary Tank Material: C.S.					Secondary Tank Material: C.S.				
Head Thickness	Shell Thickness	Bottom Thickness	Roof Thickness	Other	Head Thickness	Shell Thickness	Bottom Thickness	Roof Thickness	Other
6mm	5mm	N/A	N/A	N/A	6mm	4mm	N/A	N/A	N/A

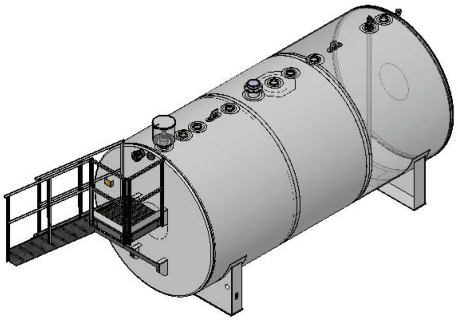

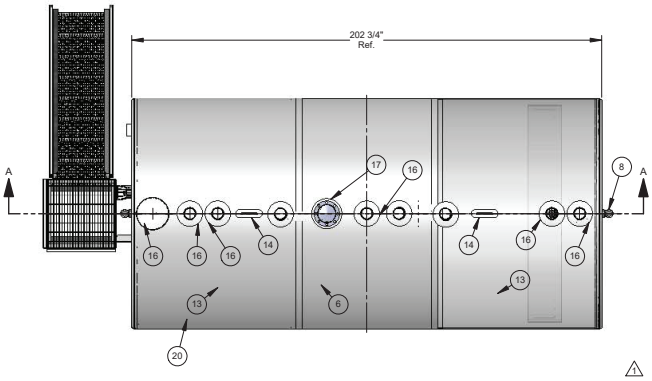

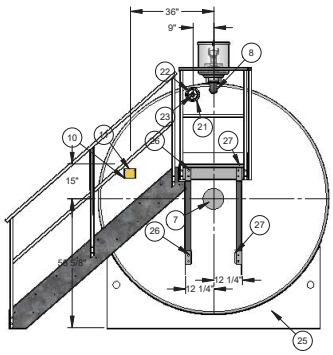

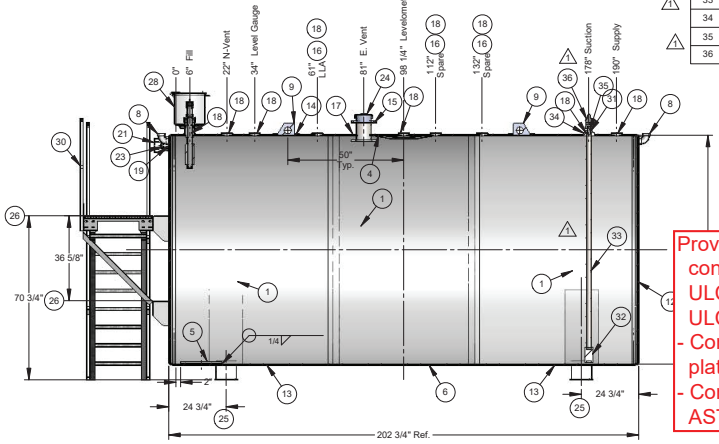

SECTION A-A

ITEM NO.	QTY.	CLEMMER ID	DESCRIPTION	SHIP LOOSE ITEMS
1	3	SHRW098066GC	Shell, Primary Tank	
2	2	HDFF098500JC	Head, Primary Tank: Flat Flanged	
3	1	HDFF099500JC	Head, Secondary Tank: Flat Flanged	
4	1	PATU240000XC	Patch: 1/4" Thk.	
5	1	WERP181800JC	Wear Plate: 1/4" Thk. x 18" Sq.	
6	1		Shell, Secondary Tank	
7	2	SPCP000000XC	Spacer Plate: 3/8" thk. x 24" O.D.	
8	2	ISVE200000XX	INTERSTITIAL VENT FLUSH 2" ELBOW	
9	2	LLTV050075QC	LIFT LUG : 1/2" THK. X 7-1/2" C.S.	
10	1	BKPL400055XC	P.V. LABEL BRACKET: C.S.	
11	1	LBAG601070XX	Nameplate , ULC-S601-14	
12	1	HDFF099500JC	Head, Secondary Tank: Flat Flanged	
13	2		Shell, Secondary Tank	
14	2	WRLL000000XC	Wrap, Lift Lug #LLTV050075QC	
15	1	VNTE060000XC	6" E Vent Assembly	
16	9		Wrap: 4" Weldin	
17	1		Wrap: 6" Pipe	
18	9	WLDF400035XC	4" NPT - 350# Weldin	
19	1	CPHT025701XC	1/4" NPT Cplg	
20	1	CONL200400XC	Connector Plate & Lug: 2" x 4"	
21	1	CGGD450000XC	Cage Guard	
22	1	RGCM450150XC	Cage Guard Mount	
23	1	MNVM300000XX	Monitor VM-3 Vacuum Gauge Ass'y	
24	1	VNTE060002XX	6" E-Vent Morrison Bros	
25	2		Saddle For99.5 Tank	
26	2		Platform Support Bracket	
27	2		Platform Support Bracket	
28	1	KTOP200002XX	Overfill Prevention Valve c-w 19 Ltr. Spill Cont. 2"	YES
30	1	KTSQ080001XX	O.B.C.-Stairway and Platform Assembly for Kit 8 Step	YES
31	1	PURCHASED	REDUCING BUSHING: 2" X 1" NPT.	YES
32	1	PURCHASED	FOOT VALVE 2in FNPT DBL POPPET -335A-0200AV	YES
33	1		DROP TUBE: 2" SCH 40 T.B.E	YES
34	1	BSHD402020XC	Double Tapped Bushing: 4" x 2" x 2" Npt.	YES
35	1		NIPPLE : 1" SCH 40 T.B.E x 3" LG	YES
36	1	PURCHASED	Anti-Siphon Valve: 1" Npt.	YES

SteelCraft Technologies Inc.
for
Approval Only

Provide letter: Confirm tank and secondary containment are constructed to ULC-S630 and tested to ULC/ORD-C- 142.3.
- Confirm stair, handrail and non-skid platform are OSHA approved.
- Confirm sheet steel conforms to ASTM A635/A 635M-02 or equivalent.

REFERENCE: C.S.T.I. CAN/ULC-S601 TANK CONSTRUCTION MANUAL			
Name of Manufacturer:	SteelCraft Inc. - Clemmer Division		
Year of Manufacture:	2018	MARKING / DECALS	
Tank Capacity:	25,000 Ltrs.	All Tanks:	Yes
Maximum Operating Pressure:	7 kPa	Rectangular Tanks:	No
Maximum Test Pressure:	4.35 psig [30 kPa]	Utility Tanks:	No
Maximum Operating Vacuum:	300 Pa	Double Wall Tanks:	Yes
Req. Cap. of Emergency Venting:	154 cu.m./min	Contained Tanks:	No
Standard Number:	CAN/ULC-S601	Other:	No
Approx. Weight:	9723 lbs	Serial No.:	
Interior Finish:	As Welded		
Exterior Finish:	Commercial Blast and Apply interline primer base and 2 Coat Interline 629HS White Top Coat		

REFERENCE: C.S.T.I. CAN/ULC-S601 TANK CONSTRUCTION MANUAL					
PRIMARY TANK JOINTS		TANK CONNECTIONS			
Shell / Sidewall	Fig. 1 - S1.2		Primary	Secondary	
Head	Fig. 2 - H2.2	Weldin	Fig. 6-6.1a	Fig. 10-10.1	
Roof	N/A	Coupling	Fig. 6-6.2	Fig. 10-10.2	
Bottom	N/A	Flanged	Fig. 6 - 6.5	Fig. 10-10.3	
Comer	N/A	Manway	N/A	N/A	
SECONDARY WALL JOINTS		Interstitial Connections		Figure 12	
Shell / Sidewall	LAP	Lifting / Tailing Lug Connections		Fig. 14-TYPE I	
Head / Shell	Fig.11 - D.1	Bulkhead Construction		N/A	
Bottom	N/A	Bracing for Unflanged Flat Heads		N/A	
Spacer	Fig.11 - D.7	Production Test in accordance with Page 6			

STANTEC PROJECT #: 110126045

This review by Stantec is for general conformance with the design concept of Stantec's design of the:
- ☐ Architectural
- ☐ Structural
- ☑ Mechanical
- ☐ Electrical
- ☐ Other

component(s) only and does not mean that Stantec has verified or approves the shop drawing(s). The Contractor remains solely responsible for the shop drawing(s) and this review by Stantec does not relieve the Contractor of the Contractor's responsibility for errors or omissions in the shop drawing(s) or for meeting all requirements of the contract documents. This review does not mean that Stantec approves the detailed design inherent in the shop drawing, responsibility for which shall remain with the Contractor submitting same, nor does this review mean that Stantec accepts any deviation of the shop drawing(s) from the contract documents. The Contractor is responsible for confirming all dimensions and correlating them at the job site, for all construction means, methods and techniques, and for coordination of construction work of all trades, including coordination of all shop drawings.

SUBMITTAL #: AD-005R1

Stantec

- ☐ REVIEWED
- ☑ REVIEWED, AS NOTED
- ☐ REVISE AND RESUBMIT
- ☐ NOT REVIEWED

DATE: 2018-06-12

BY: L Fleming

REV.	DESCRIPTION	DATE	APPROVED
1	DROP TUBES ADDED STAIR REORIANTED	07/06/2018	MW

This drawing is the exclusive property of STEELCRAFT Inc. and is proprietary and confidential information. This drawing and the information contained therein must not be duplicated, used, divulged, reproduced, copied, disclosed or appropriated in whole or in part for any purpose other than as expressly authorized by STEELCRAFT Inc. This drawing must be returned promptly upon request.

STEELCRAFT
Clemmer Division

DESCRIPTION:	25,000 Ltr. Storage Tank, Double Wall, 360 deg, Vacuum Monitored		
CUSTOMER:	Mechanique Nordique Inc.		
PROJECT:	City Of Iqaluit Waste Water Treatment Plant Upgrade		
ITEM NO.:	-	DRN.: MW 30/05/2018	SCALE 1:32
JOB NO.:	31329/1	DWG. NO.: 31329-1-30	1

MATERIAL OF CONSTRUCTION									
Primary Tank Material: C.S.					Secondary Tank Material: C.S.				
Head Thickness	Shell Thickness	Bottom Thickness	Roof Thickness	Other	Head Thickness	Shell Thickness	Bottom Thickness	Roof Thickness	Other
6 mm	4.5 mm	N/A	N/A	N/A	6.0 mm	4.5 mm	N/A	N/A	N/A

ITEM NO.	QTY.	ClemmerNo	DESCRIPTION
1	1		INNER TANK SHELL: BOTTOM 3/16" THK.
2	2		PRIMARY TANK HEAD: 1/4" THK.
3	1		INNER TANK SHELL:TOP 3/16" THK.
4	2		SECONDARY TANK HEAD: 1/4" THK.
5	2		OUTER TANK SHELL: TOP 3/16" THK.
6	5	CPHT200015XC	2" NPT - 150# Half Coupling
7	1	CPHT250015XC	2 1/2" NPT - 150# Half Coupling
8	1		Pipe: 2" Sch.40 x 43" Long w/ M.N.P.T. One End
9	1	BKUL350055XC	Label Bracket: 3 1/2" x 5 1/2"
10	1	LBFO602000XX	Nameplate , ULC-S602
11	1	LLTS290000XC	Lift Lug
12	2		Channel Base: C4 x 5.4# x 23 1/2"" Lg.

STANTEC PROJECT #: 110126045

This review by Stantec is for general conformance with the design concept of Stantec's design of the:

☐ Architectural ☐ Electrical
☐ Structural ☐ Other
☑ Mechanical

component(s) only and does not mean that Stantec has verified or approves the shop drawing(s). The Contractor remains solely responsible for the shop drawing(s) and this review by Stantec does not relieve the Contractor of the Contractor's responsibility for errors or omissions in the shop drawing(s) or for meeting all requirements of the contract documents. This review does not mean that Stantec approves the detailed design inherent in the shop drawing, responsibility for which shall remain with the Contractor submitting same, nor does this review mean that Stantec accepts any deviation of the shop drawing(s) from the contract documents. The Contractor is responsible for confirming all dimensions and correlating them at the job site, for all construction means, methods and techniques, and for coordination of construction work of all trades, including coordination of all shop drawings.

SUBMITTAL # AD-005R1

Stantec

☑ REVIEWED
☐ REVIEWED, AS NOTED
☐ REVISE AND RESUBMIT
☐ NOT REVIEWED

DATE 2018-06-12

BY Lee Fleming

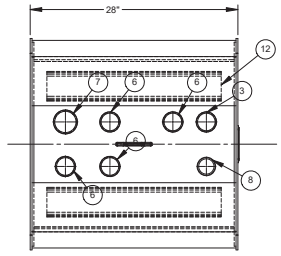

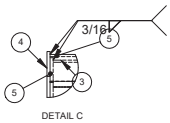

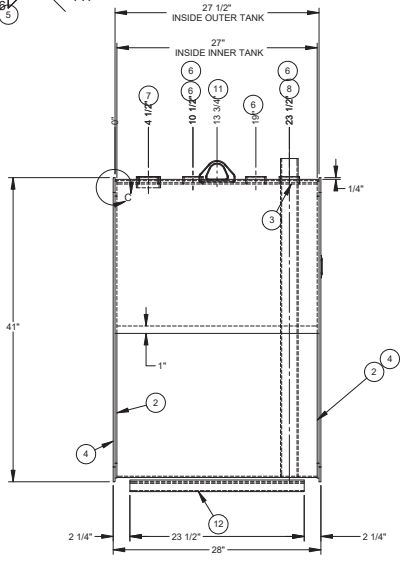

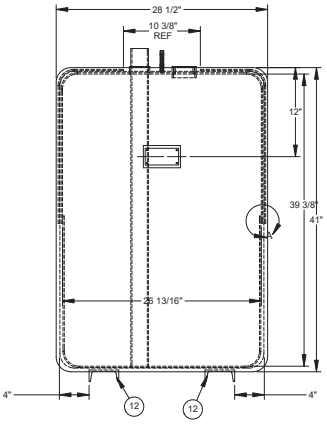

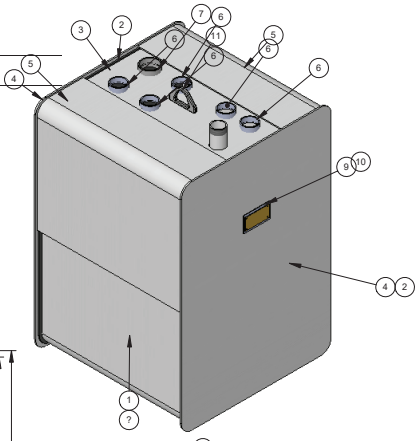

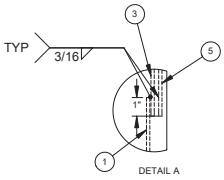

REFERENCE: C.S.T.I. CAN/ULC-S601 TANK CONSTRUCTION MANUAL			
Name of Manufacturer:	SteelCraft Inc. - Clemmer Division		
Year of Manufacture:	2018	MARKING / DECALS	
Tank Capacity:	680 Ltrs.	All Tanks:	YES
Maximum Operating Pressure:	1 psig [7 kPa]	Rectangular Tanks:	NO
Maximum Test Pressure:	5.0 psig [35 kPa]	Utility Tanks:	NO
Maximum Operating Vacuum:	300 Pa	Double Wall Tanks:	YES
Req. Cap. of Emergency Venting:	cu.m./min	Contained Tanks:	YES
Standard Number:	CAN/ULC-S601	Other:	ULC-S602
Approx. Weight:	620.14 lbs	Serial No.:	----
Interior Finish:	As Welded		
Exterior Finish:	interline primer base & 2 Coat Interline 629HS White Top Coat		

REFERENCE: C.S.T.I. CAN/ULC-S601 TANK CONSTRUCTION MANUAL				
PRIMARY TANK JOINTS		TANK CONNECTIONS		
Shell / Sidewall	Fig. 1 - S1.5		Primary	Secondary
Head	Fig. 5 - C5.14	Weldn	N/A	N/A
Roof	N/A	Coupling	Fig. 6-6.2	Fig. 10-10.2
Bottom	N/A	Flanged	N/A	N/A
Corner	N/A	Manway	N/A	N/A
SECONDARY WALL JOINTS		Interstitial Connections		Fig. 20-A
Shell / Sidewall	LAP	Lifting / Tailing Lug Connections		Fig. 14-TYPE IIIa
Head / Shell	Fig. 5 - C5.14	Bulkhead Construction		N/A
Bottom	N/A	Bracing for Unflanged Flat Heads		N/A
Spacer	N/A	Production Test in accordance with Page 6		

REV.	DESCRIPTION	DATE	APPROVED
1	TANK SIZE CHANGED	07/06/2018	MW

This drawing is the exclusive property of STEELCRAFT Inc. and is proprietary and confidential information. This drawing and the information contained therein must not be duplicated, used, divulged, reproduced, copied, disclosed or appropriated in whole or in part for any purpose other than as expressly authorized by STEELCRAFT Inc. This drawing must be returned promptly upon request.

STEELCRAFT
Clemmer Division

DESCRIPTION: 680 LTR. 100% CONTAINED RECTANGULAR TANK (QTY -2)

CUSTOMER: Mecanique Nordique Inc.

PROJECT: City Of Iqaluit Waste Water Treatment Plant Upgrade

ITEM NO.: | DRN.: MW | 03-FEB-2016 | SCALE 1:10

JOB NO.: 31329/3 | DWG. NO.: 31329-3-30

1

6

REVIEWED BY CONTRACTOR

Kudlik Construction Ltd.

NAME: Sandra Rousseau P.Eng

DATE: Jun 11, 2018

Mécanique Nordique
Plumbing
Heating
Ventillation
mecanique.nordique@hotmail.com

1255 Rue J.A.Bombardier
Lévis, Québec
G7A 2P4
Téléphone: 418-496-1109
Télécopieur: 418-496-3803

IQALUIT WWTP UPGRADE

DRAWING FOR APPROVAL

Ingineer : NUNAMI STANTEC

DRAWING #: AD-006R

Section	23 51 00
Article	PART 2
Plans	M-500
Application	: CHIMNEY
Brand	: ICC
Model	: VIP 2"
Revised #	: 1
Supplyer	:Enerchem
Pages incl.	4
Date	: **2018-06-11**
By	: **Mécanique Nordique Inc.**

Stantec

☐ Reviewed
☒ Reviewed as Modified
☐ Revise and Resubmit
☐ Not Reviewed

Boris Hoefs 6/14/2018

By: _____

This review by Stantec Architecture Ltd. is for the sole purpose of ascertaining conformance with the general design concept. This review shall not mean that Stantec Architecture Ltd. approves the detail design inherent in the shop drawings, responsibility for which shall remain with the Contractor submitting same, and such review shall not relieve the Contractor of his responsibility for errors or omissions in the shop drawings or of his responsibility for meeting all requirements of the Contract Documents. The Contractor is responsible for dimensions to be confirmed and correlated at the job site, for information that pertains solely to fabrication processes or to techniques of construction and installation and for co-ordination of the work of all subtrades.

STANTEC ARCHITECTURE LTD. (PC-1449)

ICC INDUSTRIAL CHIMNEY COMPANY INC.
ST-JEROME, QUÉBEC, CANADA, J7Y 4B7
TEL: (450) 565-6336 • FAX: (450)565-6519
www.icc-rsf.com

INSTALLATION AND OPERATION INSTRUCTIONS

"Model VIP"

CHIMNEY TYPE: FACTORY BUILT CHIMNEY FOR USE ON COMMERCIAL AND INDUSTRIAL POSITIVE PRESSURE, FORCED DRAFT AND NATURAL DRAFT APPLIANCES

SIZE: 6" TO 48" I.D.

A MAJOR CAUSE OF CHIMNEY RELATED FIRES IS FAILURE TO MAINTAIN REQUIRED CLEARANCE (AIR SPACE) TO COMBUSTIBLE MATERIALS. IT IS OF UTMOST IMPORTANCE THAT THIS CHIMNEY BE INSTALLED ONLY IN ACCORDANCE WITH THESE INSTRUCTIONS.

Use only factory supplied components. Failure to do so will void the certification and the warranty of this chimney.

If possible, install the chimney on the interior of the building as it will provide better performance than an exterior chimney. In areas with continuous temperatures below -18 °C (0 °F). The use of an exterior chimney may result in operating problems such as poor draft and excessive condensation of combustion products. If you do install an exterior chimney, we recommend that you install it within an insulated enclosure.

Read these instructions and keep them for future reference. Contact local building or fire officials about restrictions and installation inspection in your area

TABLE OF CONTENTS

TECHNICAL SPECIFICATIONS..... 3
INSTALLATION NOTES..... 4
MODEL "VIP" CHIMNEY..... 5
INSTALLATION INSTRUCTIONS..... 5

- Universal Adaptator Plate (AP)..... 5
- Base Support (BS)..... 6
- Wall Support (WS)..... 7
- Chimney Length (L)..... 7
- Elbows (E15, E22.5, E30, E45)..... 8
- Wall Band (WB)..... 8
- Guy Band (GB)..... 9
- Radiation Shield (RS)..... 9
- Roof Flashing (FF, FA, FB, FC)..... 10
- Rain Cap (RC) and Exit Cone (EC)..... 10
- Adjustable Length (A1, A2)..... 10

LISTING:

CANADA

CHIMNEY SIZE 6" - 48"
O. R. DOCUMENT ULC-C-959-RD-87
ULC LISTING # CMH 1428

VIP is pressure tested to the Canadian RD S657 Industrial Chimney Standard.

USA

CHIMNEY SIZE 6" - 36"
STANDARD UL-103
UL-LISTING # MH-16722

VIP is listed to the UL 103 Standard. It is not pressure listed to UL 103.

TECHNICAL SPECIFICATIONS

MATERIALS:

Flue / Casing: 304/304 - 304/Galvalume - 316/304 - 316/316

Insulation: High temperature mineral wool 50mm

ALLOWABLE FLUE GAS TEMPERATURE:

MAXIMUM CONTINUOUS FIRING	1400°F	760°C
BRIEF FORCE FIRING	1700°F	927°C
TESTED TO	1800°F	980°C
MAXIMUM CONTINUOUS FIRING	1000°F	540°C
BRIEF FORCE FIRING	1400°F	760°C
TESTED TO	1700°F	927°C

CLEARANCES:

To Non-Combustible material: No clearance required

To Combustible material: See chart below

CHIMNEY I.D.	CONTINUOUS TEMPERATURE	
(in.)	1000°F	1400°F
6" - 12"	2"	2"
14"	2"	4"
16"	2"	5"
18" - 20"	2"	6"
22"	2"	7"
24"	4"	7"
26" - 28"	5"	7"
30" - 32"	6"	7"
34" - 36"	7"	7"
38" - 48"	8"	8"

INSTALLATION NOTES

GENERAL:

1. The chimney is intended for use with commercial and industrial heating appliances and diesel engine generating positive pressure in the stack. This chimney is NOT for use in single or two family residences.

   Allowable Flue Gas Temperature:

MAXIMUM CONTINUOUS FIRING	1400°F	760°C
BRIEF FORCE FIRING	1700°F	927°C
TESTED TO	1800°F	980°C

2. Size the chimney in accordance with the appliance manufacturer's instructions. ICC will calculate correct chimney sizing on request.

3. The chimney must **NOT** be enclosed in a combustible chase. If it is desirable to enclose the chimney, then the enclosure must be constructed of non combustible materials. The fire rating required is determined by the local building code. A one hour fire rating is accepted in most areas.

4. Do not fill the space around the chimney with insulation or any other material. This space must remain empty.

5. The chimney shall extend at least 3'. above point of contact with the roof and at least 2'. higher than any wall, roof or adjacent building within 10'.

6. The maximum height of unguyed chimney above the roof is 5'.

7. The clearance between single wall connector and unprotected combustible material **must not be** less than 18" (refer to the Building Code in use in your area).

8. Factory built chimneys which extend through any story above that on which the connected appliance is located are to be provided with enclosures having a fire rating equal to or greater than that of the floor or roof assembly through which they pass.

9. A support must be installed on the first chimney section above each vertical tee.

10. **Chimney Cleaning:**

    Keep your chimney clean. Access should be provided for the inspection and cleaning of all sections of the chimney.

    Have your chimney cleaned by a qualified chimney sweep. If you want to clean your chimney yourself, then clean your chimney using a nylon or metal chimney brush of the **CORRECT SIZE. DO NOT** use a brush that will scratch the stainless steel interior of the chimney.

11. **Soot Formation and Need for Removal (oil appliance):**

    Soot can accumulate on the chimney flue when connected to an oil fired appliance. If not removed periodically this deposit can ignite and possibly damage the chimney.

    The chimney should be inspected at least once every year during the heating season to determine if any build-up of soot has occurred.

    If soot has accumulated, it should be removed to reduce the risk of chimney fire.

MODEL "VIP" CHIMNEY

1. The maximum height of chimney supported is:

2. The supports described in this booklet are the only supports which should be used with ICC's MODEL "VIP" Factory Built Chimney.

3. If additional height is required, use an additional support at the specified maximum chimney support height.

Chimney Size (I.D.)		6”	8”	10”	12”	14”	16”	18”	20”
Universal Adaptor Plate	(AP)	186’	146’	120’	102’	89’	78’	70’	64’
Base Support	(BS)	186’	146’	120’	102’	89’	78’	70’	64’
Wall Support	(WS)	150’	118’	97’	82’	72’	63’	57’	51’
Chimney Length	(L)	186’	146’	120’	102’	89’	78’	70’	64’
Insulated Tee	(TR)	82’	65’	53’	45’	39’	35’	31’	28’

Chimney Size (I.D.)		22”	24”	26”	28”	30”	32”	34”	36”
Universal Adaptor Plate	(AP)	58’	53’	49’	46’	43’	40’	38’	36’
Base Support	(BS)	58’	53’	49’	46’	43’	40’	38’	36’
Wall Support	(WS)	47’	43’	40’	37’	35’	33’	31’	29’
Chimney Length	(L)	58’	53’	49’	46’	43’	40’	38’	36’
Insulated Tee	(TR)	26’	23’	22’	20’	19’	18’	17’	16’

Chimney Size (I.D.)		38”	40”	42”	44”	46”	48”
Universal Adaptor Plate	(AP)	34’	33’	31’	30’	28’	27’
Base Support	(BS)	34’	33’	31’	30’	28’	27’
Wall Support	(WS)	28’	26’	25’	24’	23’	22’
Chimney Length	(L)	34’	33’	31’	30’	28’	27’
Insulated Tee	(TR)	15’	14’	13’	13’	12’	12’

INSTALLATION INSTRUCTIONS

UNIVERSAL ADAPTOR PLATE (AP)

The chimney may be supported directly on top of the appliance. This is achieved by attaching a Universal Adaptor Plate (AP) directly to the outlet of the appliance. There are many flue collar designs as there are boiler manufacturers.

Custom plate sizes and hole patterns are available upon request.

The maximum supported height is the lesser of: the maximum allowable weight that the appliance can support or the height specified in our technical specifications.

1. Attach the adaptor plate to the appliance flue outlet using clamps, bolts or stainless steel metal screws depending on the flue outlet type.

2. Place the first chimney length on the adaptor plate.

3. Attach the chimney length to the adaptor plate using stainless steel metal screws through the adaptor plate retaining brackets.

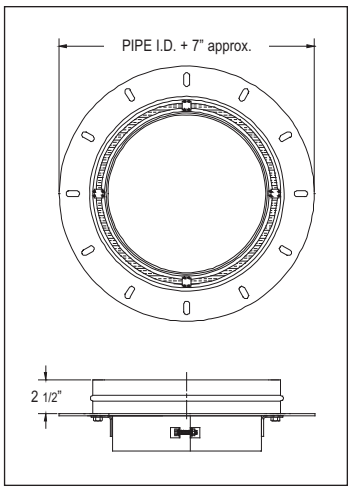

BASE SUPPORT (BS)

This Support may be attached to a combustible or non-combustible floor or roof.

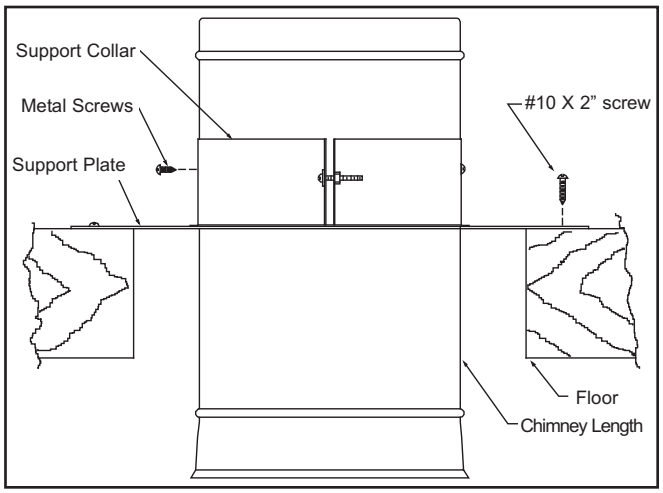

1. Attach the support to the floor or roof using at least a #10 X 2" screw through each hole in the support.

2. Place the support collar around the chimney length at the desired height. Tighten the ring and then screw the stainless steel metal screws (supplied with support) through the collar and into the chimney casing. Be sure to use a metal screw in each prepunched hole.

3. Place the chimney and collar in the support.

4. Continue installing chimney lengths as required.

The Minimum Hole Size (1000°F flue gas)

Chimney Size (I.D.)	6”	8”	10”	12”	14”	16”	18”	20”
Combustible	12”	14”	16”	18”	20”	22”	24”	26”
Non-Combustible	9”	11”	13”	15”	17”	19”	21”	23”

Chimney Size (I.D.)	22”	24”	26”	28”	30”	32”	34”	36”
Combustible	28”	34”	38”	40”	44”	46”	50”	52”
Non-Combustible	25”	27”	29”	31”	33”	35”	37”	39”

Chimney Size (I.D.)	38”	40”	42”	44”	46”	48”
Combustible	56”	58”	60”	62”	64”	66”
Non-Combustible	41”	43”	45”	47”	49”	51”

The Minimum Hole Size (1400°F flue gas)

Chimney Size (I.D.)	6”	8”	10”	12”	14”	16”	18”	20”
Combustible	12”	14”	16”	18”	24”	28”	32”	34”
Non-Combustible	9”	11”	13”	15”	17”	19”	21”	23”

Chimney Size (I.D.)	22”	24”	26”	28”	30”	32”	34”	36”
Combustible	38”	40”	42”	44”	46”	48”	50”	52”
Non-Combustible	25”	27”	29”	31”	33”	35”	37”	39”

Chimney Size (I.D.)	38”	40”	42”	44”	46”	48”
Combustible	56”	58”	60”	62”	64”	66”
Non-Combustible	41”	43”	45”	47”	49”	51”

WALL SUPPORT (WS)

This support may be attached to a combustible or non-combustible wall. It may be used to support an Insulated Tee or a Chimney Length.

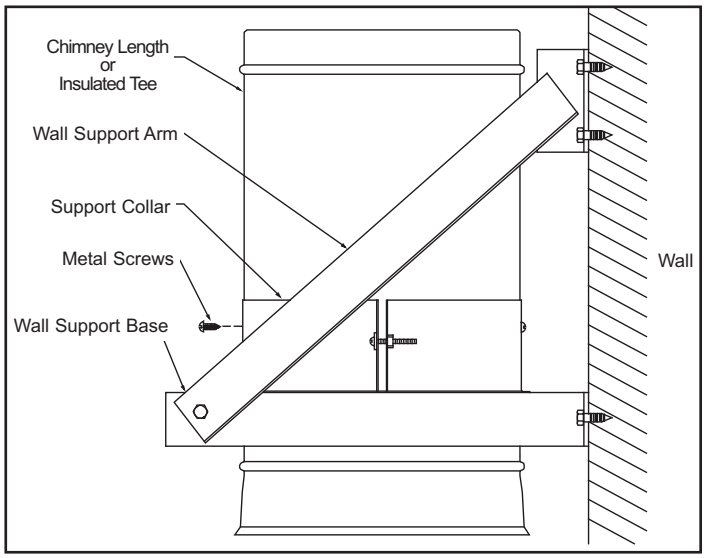

1. Attach the main support plate to the wall using at least a #10 X 2" screw through each hole in the plate. Make sure the support is horizontal, then attach the angle arms to the wall above the support.

2. Place the support collar around the chimney length at the desired height. Tighten the ring and then screw the stainless steel metal screws (supplied with support) through the collar and into the chimney casing. Be sure to use as many metal screws as there are prepunched holes in the chimney lengths.

3. Place the chimney and collar in the support.

4. Continue installing chimney lengths as required.

CHIMNEY LENGTHS (L)

Typical for Chimney Length, Tee and Elbow installation.

Install Chimney lengths as follows:

1. Before you fasten the chimney sections together apply caulking (apx. 3/16 Ø) above the top bead of the first chimney section.

2. Firmly place the next chimney section on top of the first section. Screw the stainless steel metal screws (supplied with the length) through the prepunched holes in the bottom of the length and into the lower length. Be sure to use a metal screw in each prepunched hole.

3. Wipe the excess caulking over the screw heads and along the joint surface.

4. Install the locking band over the joint. The locking band overlaps one of the beads above and one of the beads below the joint.

5. Continue until the required chimney height is achieved.

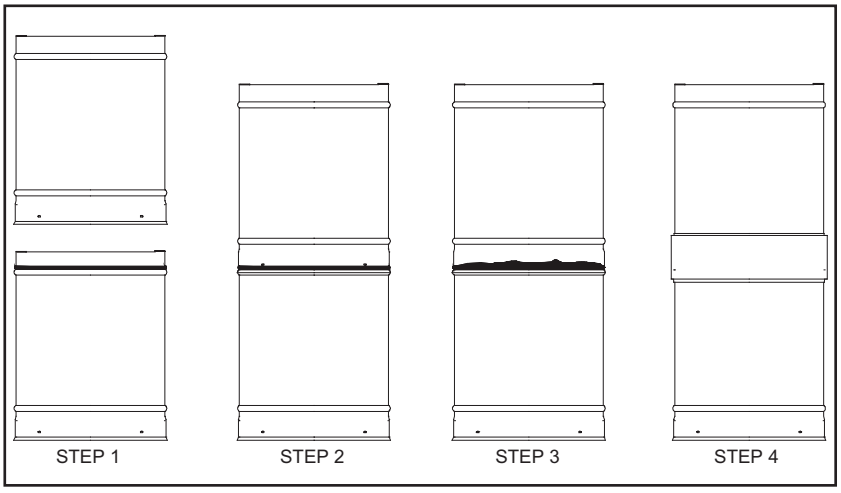

Note: *Only use the Caulking supplied by ICC with your chimney order.*

ELBOWS (E15, E22.5, E30, E45)

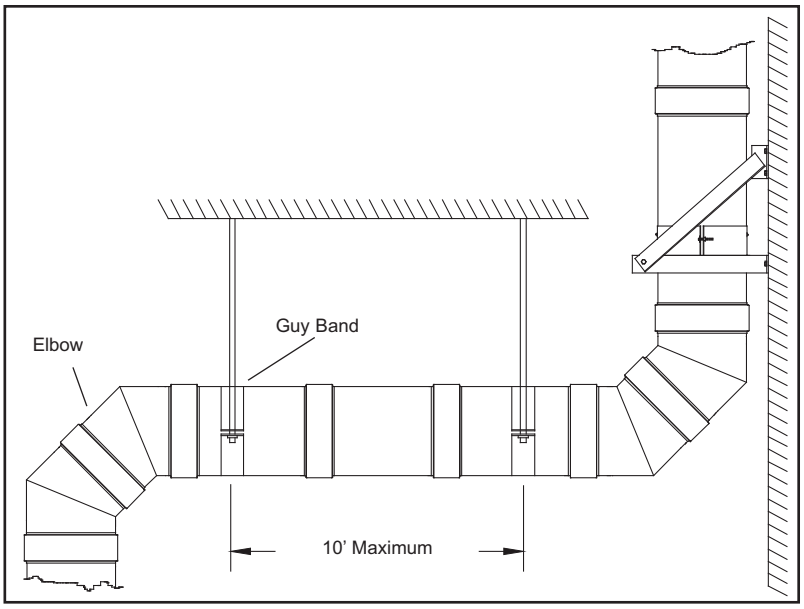

Elbows are used to offset the chimney in order to bypass a building obstruction. The number of elbows used and the degree of offset should be kept to a minimum because offsets reduce the draft available to the chimney.

The elbows are attached and sealed in the same manner as the chimney lengths.

A support must be used above any offset.

A Guy Band (GB) must be used for any offset of more than ten feet. Use additional Guy Bands at ten foot intervals of the offset chimney.

1. Place the elbow on the chimney length.

2. Screw the stainless steel metal screws (supplied with the elbow) through the prepunched holes in the bottom of the elbow and into the lower length. Be sure to use a metal screw in each prepunched hole.

WALL BAND (WB)

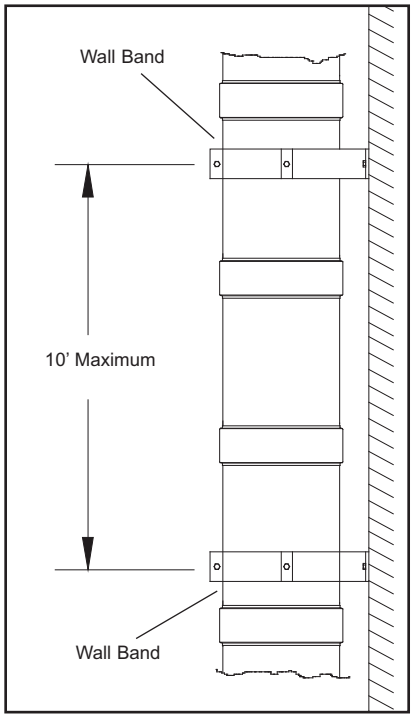

The Wall Band is used to secure the chimney to an exterior or interior wall. The recommended maximum length of chimney between wall bands is ten feet.

1. Choose a convenient location for the Wall Band.

2. Place the band collar around the chimney length at the desired height. Tighten the ring and then screw the stainless steel metal screws (supplied with wall band) through the collar and into the chimney casing. Be sure to use a metal screw and sealant in each prepunched hole.

3. Attach the band arms to the collar using the bolts supplied.

4. Attach the band arms to the wall a minimum of #10 X 2" metal screws through each hole in the support.

GUY BAND (GB)

The Guy Band may be used to support an offset chimney. The maximum distance between Guy Bands is ten feet.

The Guy Band may also be used to secure a chimney above the roof. The maximum length of unguyed chimney above the roof is five feet. The maximum length of guyed chimney above the roof is twenty feet. The maximum length of chimney between guy bands is ten feet. If height greater than twenty feet is required above the roof, an engineered support system should be installed.

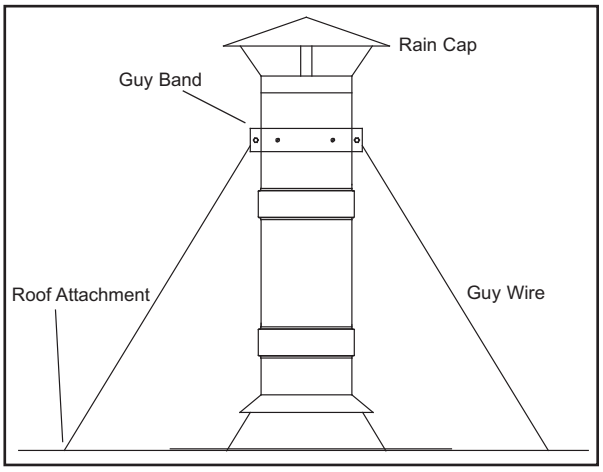

1. Place the band collar around the chimney length at the desired location. Tighten the ring and then screw the stainless steel metal screws (supplied with the band) through the band and into the chimney casing. Be sure to use a metal screw in each prepunched hole.

2. Attach guy wires to the band and to the roof or ceiling using adequate attachments (not supplied). Tighten the guy wires until the chimney is properly located and secure.

RADIATION SHIELD (RS)

The Radiation Shield is used to shield the chimney when passing through a combustible floor or roof.

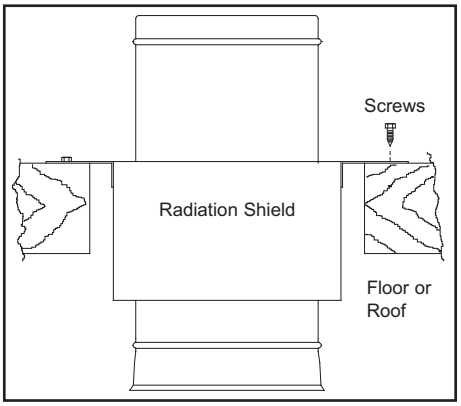

1. Install the length of chimney that passes through the floor or roof.

2. Fit the Radiation Shield over the chimney and position it so that the attachment tabs touch the floor or roof.

3. Attach the tabs to the floor or roof using #8 X 2" screws.

The Minimum Hole Size (1000°F flue gas)

Chimney Size (I.D.)	6”	8”	10”	12”	14”	16”	18”	20”
Hole size	12”	14”	16”	18”	20”	22”	24”	26”

Chimney Size (I.D.)	22”	24”	26”	28”	30”	32”	34”	36”
Hole size	28”	34”	38”	40”	44”	46”	50”	52”

Chimney Size (I.D.)	38”	40”	42”	44”	46”	48”
Hole size	56”	58”	60”	62”	64”	66”

The Minimum Hole Size (1400°F flue gas)

Chimney Size (I.D.)	6”	8”	10”	12”	14”	16”	18”	20”
Hole size	12”	14”	16”	18”	24”	28”	32”	34”

Chimney Size (I.D.)	22”	24”	26”	28”	30”	32”	34”	36”
Hole size	38”	40”	42”	44”	46”	48”	50”	52”

Chimney Size (I.D.)	38”	40”	42”	44”	46”	48”
Hole size	56”	58”	60”	62”	64”	66”

ROOF FLASHING (FF, FA, FB, FC)

1. Put the roof flashing in place. Seal the joint between the roof and the flashing with roofing pitch.

   For sloping roofs, place the flashing under the upper shingles and on the top of the lower shingles.

2. Nail the flashing to the roof using roofing nails.

3. Place the storm collar over the chimney and the flashing. Tighten it with the bolt supplied making sure the joint is properly caulked.

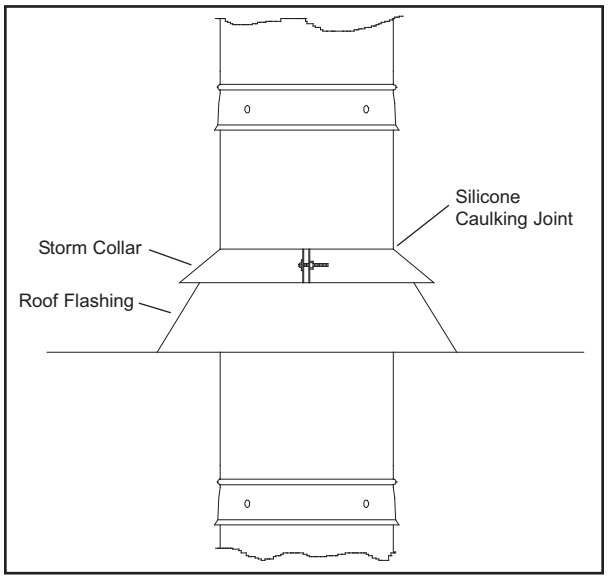

RAIN CAP (RC) AND EXIT CONE (EC)

A chimney must be terminated using either a Rain Cap or an Exit Cone. If an Exit Cone is installed, then a Drain Tee Cap (DT) must be installed.

1. Fit the Cap or Cone on to the top chimney length.

2. Screw the stainless steel metal screws (supplied with the cap) through the prepunched holes in the bottom of the cap and into the lower length. Be sure to use a metal screw in each prepunched hole.

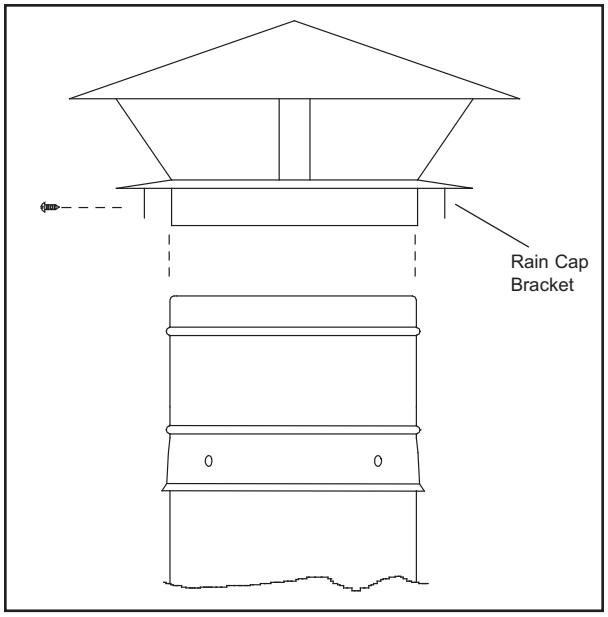

ADJUSTABLE LENGTH (A1, A2)

The adjustable length is to allow the chimney to fit in a fixed distance when a suitable standard length is not available. Typical applications are between two elbows when a fixed offset distance is required or between two boiler outlet flanges which are a fixed distance apart.

The length of the outer casing of the adjustable length must be set before it is installed. The adjustable length is installed by sliding the flue (inner stainless steel) into the section below it after the two piece outer casing has been adjusted to the correct overall length. The adjustable length should be installed with a straight chimney section below it, there is not sufficient room for it to adjust into a tee or elbow.

1. Measure the exact length required, be sure to allow for the overlap between chimney sections.

2. Slide the two piece outer casing together until the correct overall length is achieved.

3. Fasten the two casing sections together using the stainless steel sheet metal screws provided. Be sure to put a screw and sealant in each pre-punched hole.

4. Cut off the exposed insulation. You do not need to remove any extra insulation in order to allow for overlap, the insulation will compress sufficiently when assembled.

5. Slide the flue into the length below it and fasten the exterior together in the same manner as a conventional chimney section. It may require somewhat more effort to connect the adjustable length since you are compressing the insulation at the same time.

BOILER_EXHAUST

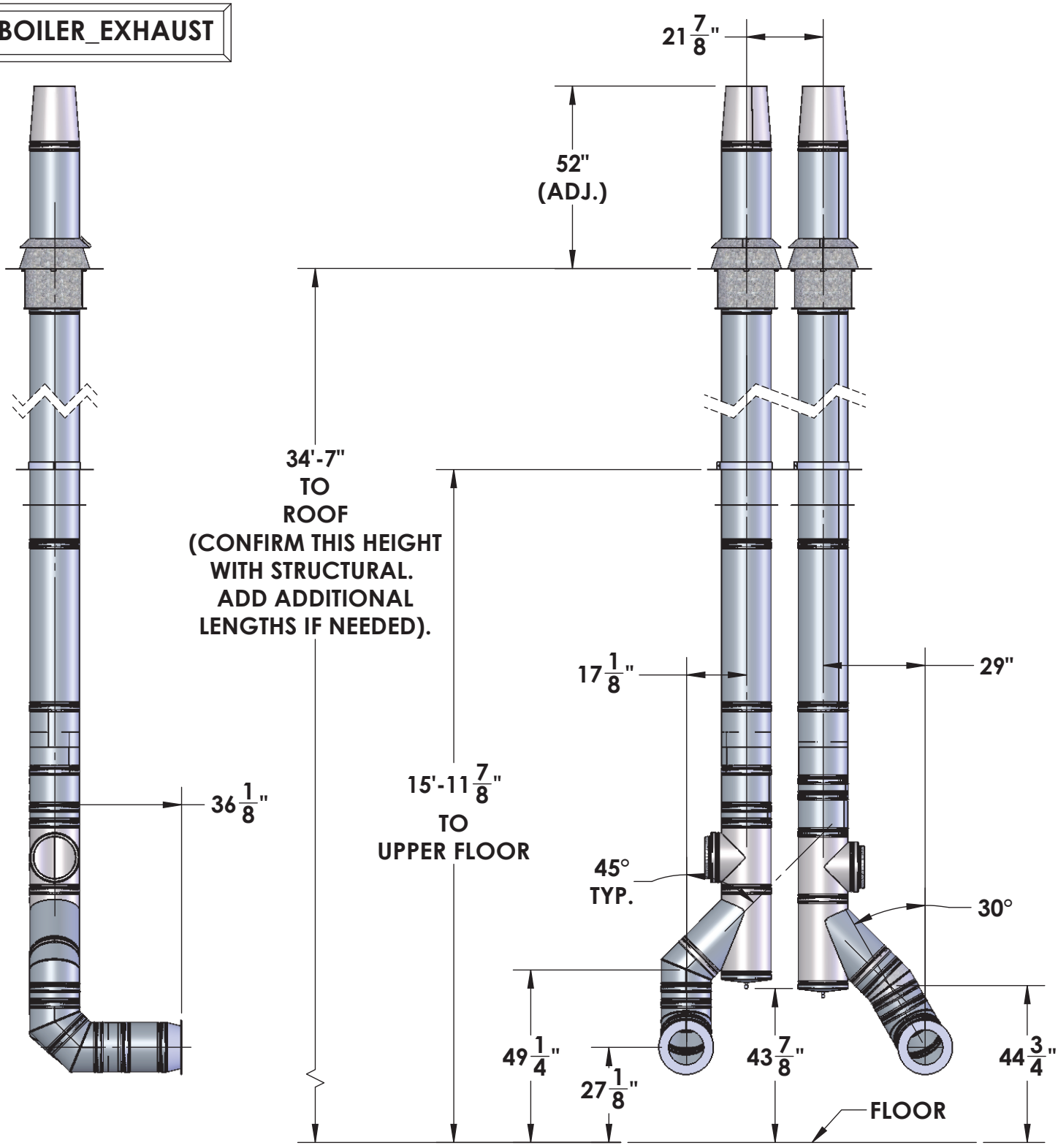

	SUPPLIER: ENER-CHEM	MODEL: VIP - 2" INSULATION	
	PROJECT: IQUALUIT WWTP	MATERIAL: INT: SS 304 EXT: SS 304	
	REVISION: REV. 2_2018/11/02_YAN	PART: 10" - I.D. CHIMNEY SYSTEM	
	DATE: MAY 30, 2018		
DRAWING BY: YANNICK VINCENT	DRAWING No: 1 OF 3	CODE: QT00316024	

WATER HEATER_EXHAUST

#	PART #	DESCRIPTION	QTY
1	VC-08L4A26A262	48" LENGTH	5
2	VC-08L2A26A262	24" LENGTH	1
3	VE-08E4A24A242	ELBOW 45°	3
4	VE-08TRA20A242	REGULAR TEE	1
5	VE-08TDA24A242	DRAIN TEE CAP	1
6	VF-10FF000C241	FLAT FLASHING	1
7	VM-10SC000C241	STORM COLLAR	1
8	VM-10BS000C221	BASE SUPPORT	2
9	VM-08APA24A242	ANCHOR PLATE	1
10	VS-08EXA24A242-NC	FLUE EXTENSION, NO CRIMP	1
11	VM-08ECA24A242	EXIT CONE	1
12	VM-10RS000C241	RADIATION SHIELD	1
13	VM-10FS000C241	FIRESTOP	1
14	VE-08TYA20A242	TEE 45°	1

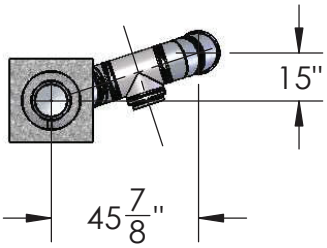

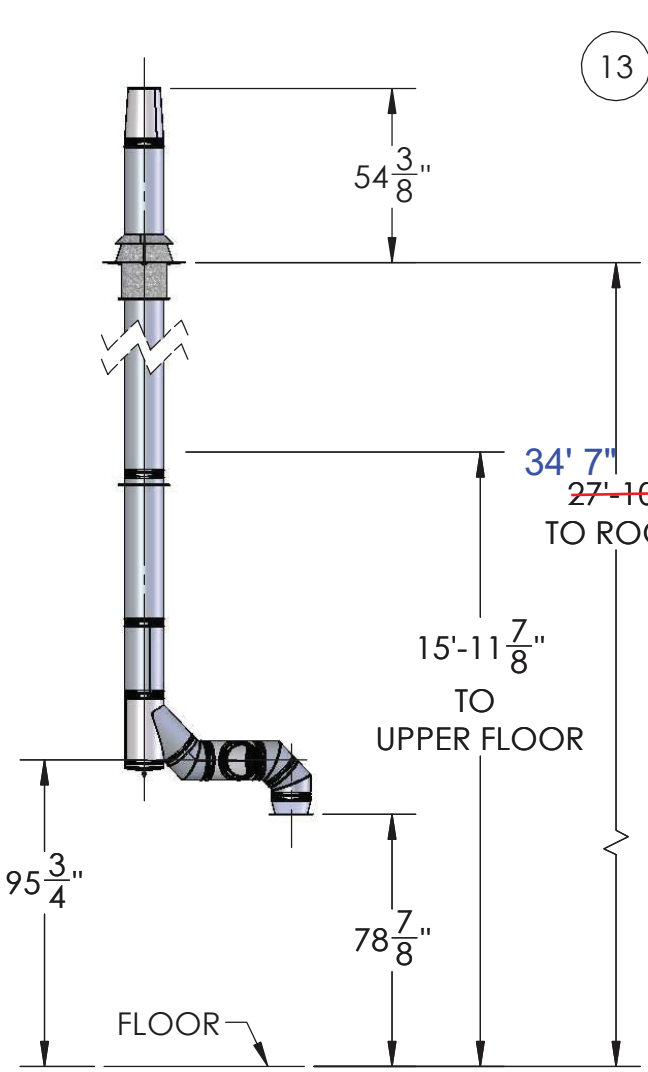

CONFIRM THIS HEIGHT WITH STRUCTURAL. ADD ADDITIONAL LENGTHS IF NEEDED

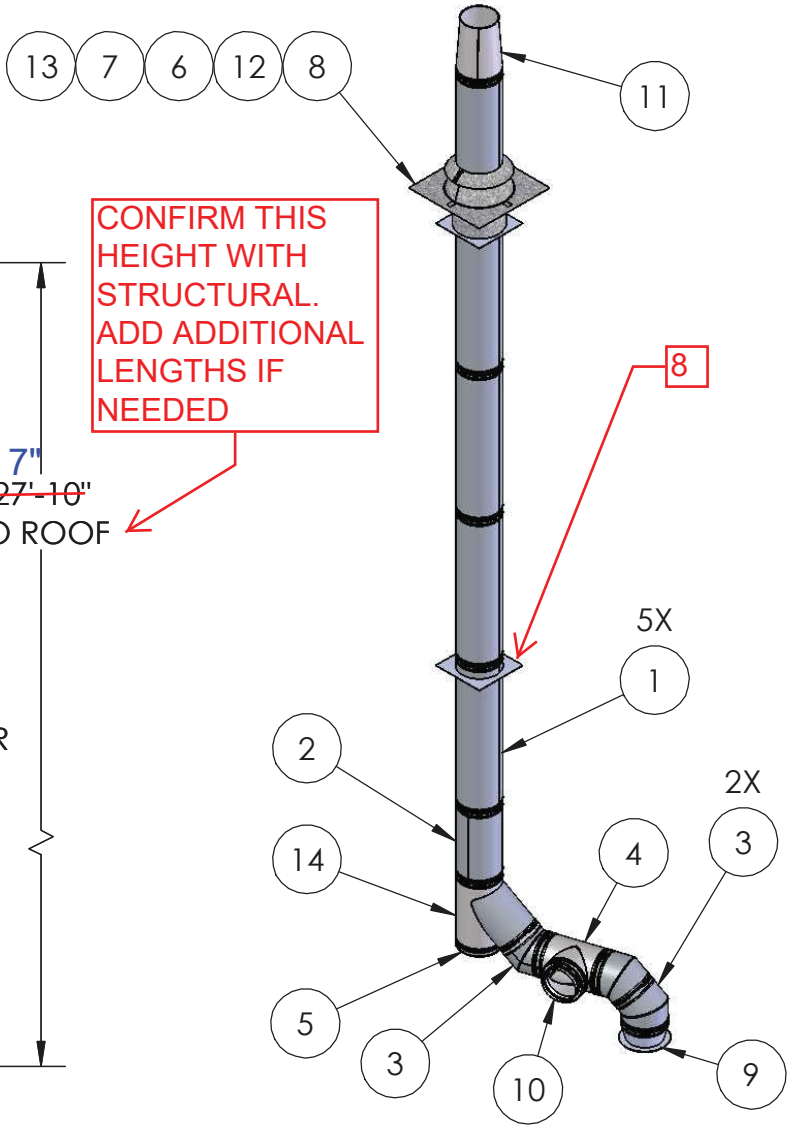

		SUPPLIER: ENER-CHEM	MODEL: VIP - 2" INSULATION
		PROJECT: IQUALUIT WWTP	MATERIAL: INT: SS 304 EXT: SS 304
		REVISION:	PART: 8" - I.D. CHIMNEY SYSTEM
		DATE: MAY 30, 2018	
DRAWING BY: YANNICK VINCENT		DRAWING No: 3 OF 3	CODE: QT00316029

7

Mécanique Nordique
Plumbing
Heating
Ventillation
mecanique.nordique@hotmail.com
1255 Rue J.A.Bombardier Lévis QC G7A 2P4
Tél : (418) 496-1109 Fax : (418) 496-3803

REVIEWED BY CONTRACTOR
Kudlik Construction Ltd.
NAME: Sandra Rousseau P.Eng
DATE: Jun 01, 2018

IQUALUIT WWTP UPGRADES

DRAWING FOR APPROVAL

ENGINEER: **NUNAMI STANTEC LIMITED**

DRAWING #: AD-007

Section	: 23 21 23
Article	: 2.1 & 2.2
Plans	: M802 PUMP SCHEDULE
Application	: HYDRONIC PUMPS
Brand	: GRUNDFOS
Model	: UPS 100-40 FB , PACO 25709 PL , UPS 4080/4 F
Revised #	:
Supplyer	: WOLSELEY
Date	: **01/06/2018**
By	: Martin Boucher

STANTEC PROJECT #: 110126045
SUBMITTAL # AD-007

This review by Stantec is for general conformance with the design concept of Stantec's design of the:
- ☐ Architectural
- ☐ Structural
- ☑ Mechanical
- ☐ Electrical
- ☐ Other

component(s) only and does not mean that Stantec has verified or approves the shop drawing(s). The Contractor remains solely responsible for the shop drawing(s) and this review by Stantec does not relieve the Contractor of the Contractor's responsibility for errors or omissions in the shop drawing(s) or for meeting all requirements of the contract documents. This review does not mean that Stantec approves the detailed design inherent in the shop drawing, responsibility for which shall remain with the Contractor submitting same, nor does this review mean that Stantec accepts any deviation of the shop drawing(s) from the contract documents. The Contractor is responsible for confirming all dimensions and correlating them at the job site, for all construction means, methods and techniques, and for coordination of construction work of all trades, including coordination of all shop drawings.

Stantec

- ☐ REVIEWED
- ☑ REVIEWED, AS NOTED
- ☐ REVISE AND RESUBMIT
- ☐ NOT REVIEWED

DATE 2018-06-05
BY Brendan Zrum, P.Eng

GRUNDFOS

Company name: Grundfos Canada
Created by: Louis Pelletier
Phone:
Email: lpelletier@grundfos.com
Date: 5/30/2018

Position	Count	Description
	1	**UPS 100-40 F B**

TAG: P-1.1 & P-1.2
HYDRONIC PUMPS



Product photo could vary from the actual product

Product No.: 96402934

The pump is of the canned rotor type, i.e. pump and motor form an integral unit without shaft seal and with only two gaskets for sealing.
The bearings are lubricatd by the pumped liquid.

In order to avoid problems in connection with disposal, great importance has been attached to using as few different materials as possible.

SPEC 23 21 23
PUMP SCHEDULE
DRAWING M802

The pump is characterized by:
* 3 speed motor.
* Ceramic radial bearings.
* Carbon axial bearing.
* Stainless steel rotor can, bearing plate and rotor cladding.
* Aluminium alloy stator housing.
* Bronze pump housing.
* Stator with built-in thermal switch.

The motor is a 3-phase motor.

The pump is supplied with a standard module in the terminal box.
The standard module is to be connected to the mains supply via external contactor.

Controls:

Relay:	without relay

Liquid:

Pumped liquid:	Water
Liquid temperature range:	14 .. 248 °F
Liquid temperature during operation:	140 °F
Density:	61.35 lb/ft³

Technical:

Actual calculated flow:	8.158 l/s
Resulting head of the pump:	2.756 m
Approvals on nameplate:	CUL

Materials:

Pump housing:	Cast Iron DIN W.-Nr. 2.1176.01
Impeller:	Stainless steel DIN W.-Nr. 1.4301 AISI 304

Installation:

Range of ambient temperature:	32 .. 104 °F
Maximum operating pressure:	145.04 psi
Flange standard:	ANSI
Type of connection:	F
Pipe connection:	GF 100

GRUNDFOS

Company name: Grundfos Canada
Created by: Louis Pelletier
Phone:
Email: lpelletier@grundfos.com
Date: 5/30/2018

Position	Count	Description

TAG: P-1.1 & P-1.2
HYDRONIC PUMPS

Pressure stage:	145 psi
Port-to-port length:	21 in
Electrical data:	
Power input in speed 1:	390 W
Power input in speed 2:	435 W
Max. power input:	570 W
Main frequency:	60 Hz
Rated voltage:	3 x 208-230 V
Current in speed 1:	1.24 A
Current in speed 2:	1.38 A
Current in speed 3:	2.5 A
Cos phi in speed 1:	0,43
Cos phi in speed 2:	0,41
Cos phi:	0,29
Enclosure class (IEC 34-5):	X4D
Insulation class (IEC 85):	H
Winding resistance:	27.5 - 36.0 ohm
Others:	
Net weight:	140 lb
Gross weight:	165 lb
Shipping volume:	2.51 ft³

Company name: Grundfos Canada
Created by: Louis Pelletier
Phone:
Email: lpelletier@grundfos.com
Date: 5/30/2018

96402934 UPS 100-40 F B 60 Hz

TAG: P-1.1 & P-1.2

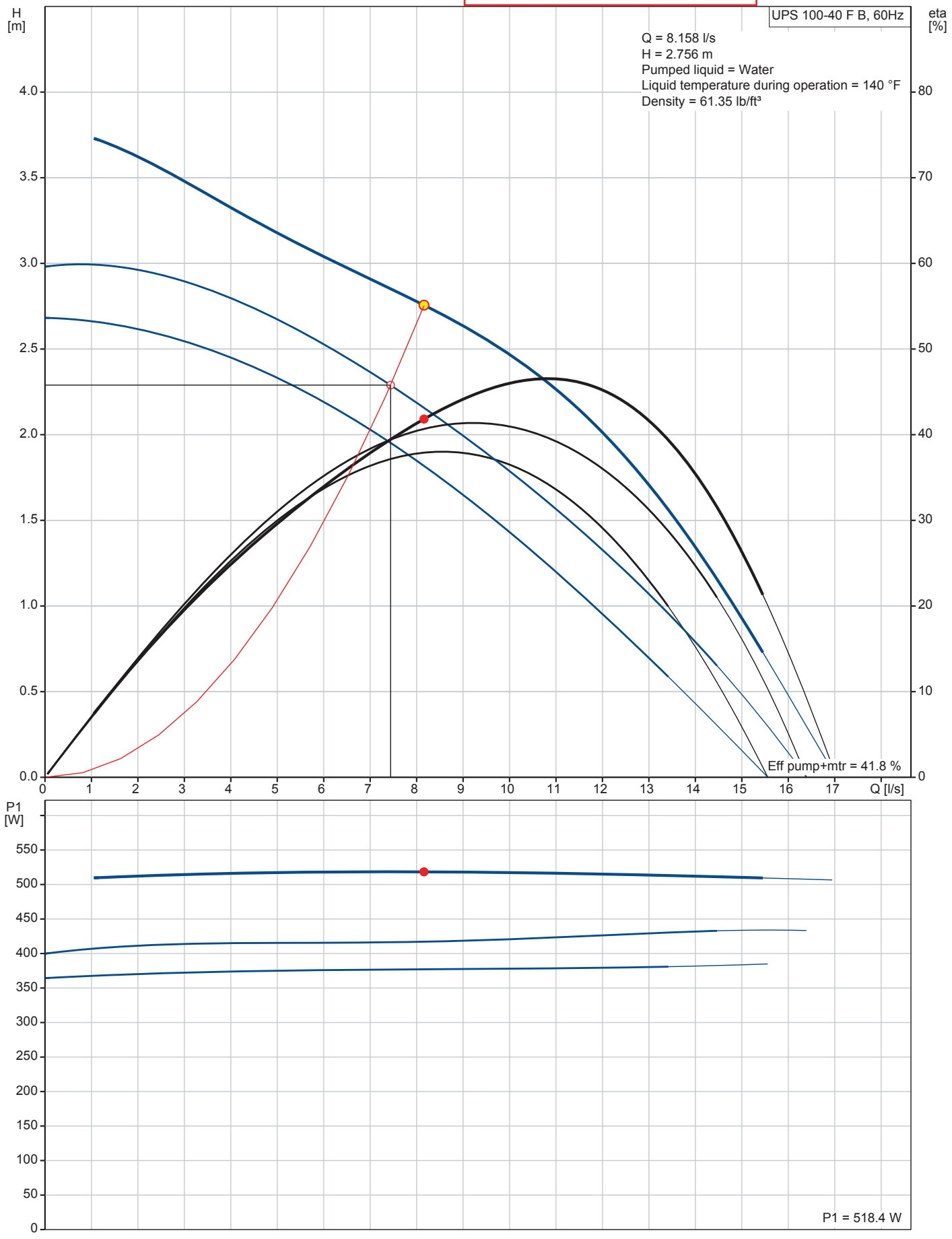

Company name: Grundfos Canada
Created by: Louis Pelletier
Phone:
Email: lpelletier@grundfos.com
Date: 5/30/2018

96402934 UPS 100-40 F B 60 Hz

TAG: P-1.1 & P-1.2
HYDRONIC PUMPS

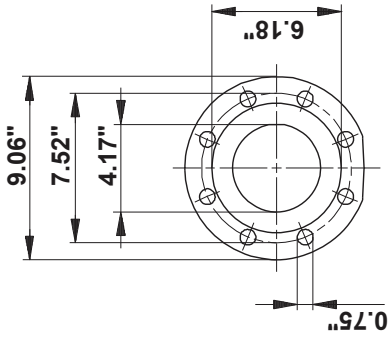

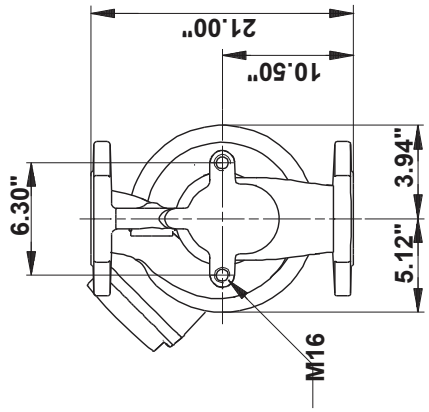

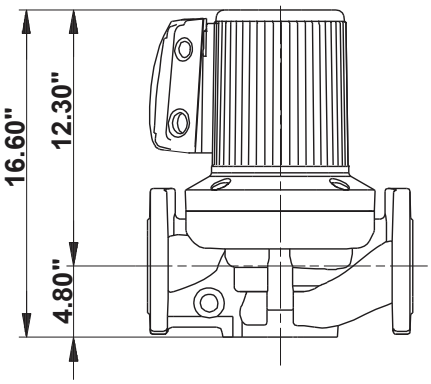

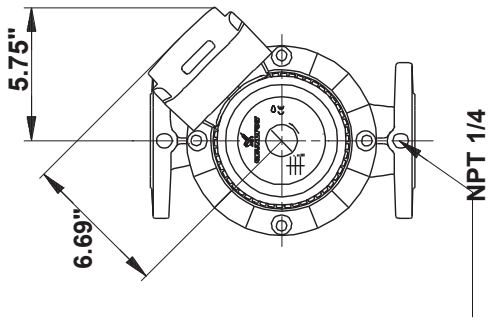

Note! All units are in [mm] unless otherwise stated.
Disclaimer: This simplified dimensional drawing does not show all details.

GRUNDFOS

TAG: P-1.3 & P-1.4

Grundfos Quotation System 18.1.5.0

Pump Performance Datasheet

Customer	:	Quote Number / ID	: 20180530-TD-HJ-001
Customer ref. / PO	:	Model	: 25709 VL
Tag Number	: P-1.3 & P-1.4 HYDRONIC PUMPS	Stages	: 1
Service	:	Based on curve number	: RC9905-1 Rev 1
Quantity	: 1	Date last saved	: May 30, 2018 8:39 AM

Operating Conditions

Flow, rated	: 9.31 l/s
Differential head / pressure, rated (requested)	: 11.14 m
Differential head / pressure, rated (actual)	: 11.14 m
Suction pressure, rated / max	: 0.00 / 0.00 psi.g
NPSH available, rated	: Ample
Frequency	: 60 Hz

Performance

Speed, rated	: 1765 rpm
Impeller diameter, rated	: 6.46 in
Impeller diameter, maximum	: 7.10 in
Impeller diameter, minimum	: 5.00 in
Efficiency	: 72.06 %
NPSH required / margin required	: 5.71 / 0.00 ft
nq (imp. eye flow) / S (imp. eye flow)	: 23 / 109 Metric units
MCSF	: 2.52 l/s
Head, maximum, rated diameter	: 14.11 m
Head rise to shutoff	: 26.54 %
Flow, best eff. point	: 8.05 l/s
Flow ratio, rated / BEP	: 115.64 %
Diameter ratio (rated / max)	: 90.99 %
Head ratio (rated dia / max dia)	: 75.15 %
Cq/Ch/Ce/Cn [ANSI/HI 9.6.7-2010]	: 1.00 / 1.00 / 1.00 / 1.00
Selection status	: Acceptable

Liquid

Liquid type	: Cold Water
Additional liquid description	:
Solids diameter, max	: 0.00 in
Solids concentration, by volume	: 0.00 %
Temperature, max	: 68.00 deg F
Fluid density, rated / max	: 1.000 / 1.000 SG
Viscosity, rated	: 1.00 cP
Vapor pressure, rated	: 0.34 psi.a

Liquid is 50% Glycol with max temp = 82.2°C

Material

Material selected	: Cast iron - 125#

Pressure Data

Maximum working pressure	: 20.03 psi.g
Maximum allowable working pressure	: 175.0 psi.g
Maximum allowable suction pressure	: 175.0 psi.g
Hydrostatic test pressure	: 263.0 psi.g

Driver & Power Data (@Max density)

Motor sizing specification	: Max power (non-overloading)
Margin over specification	: 0.00 %
Service factor	: 1.00
Power, hydraulic	: 1.36 hp
Rated power (based on duty point)	: 1.89 hp
Max power (non-overloading)	: 1.99 hp
Nameplate motor rating	: 2.00 hp / 1.49 kW

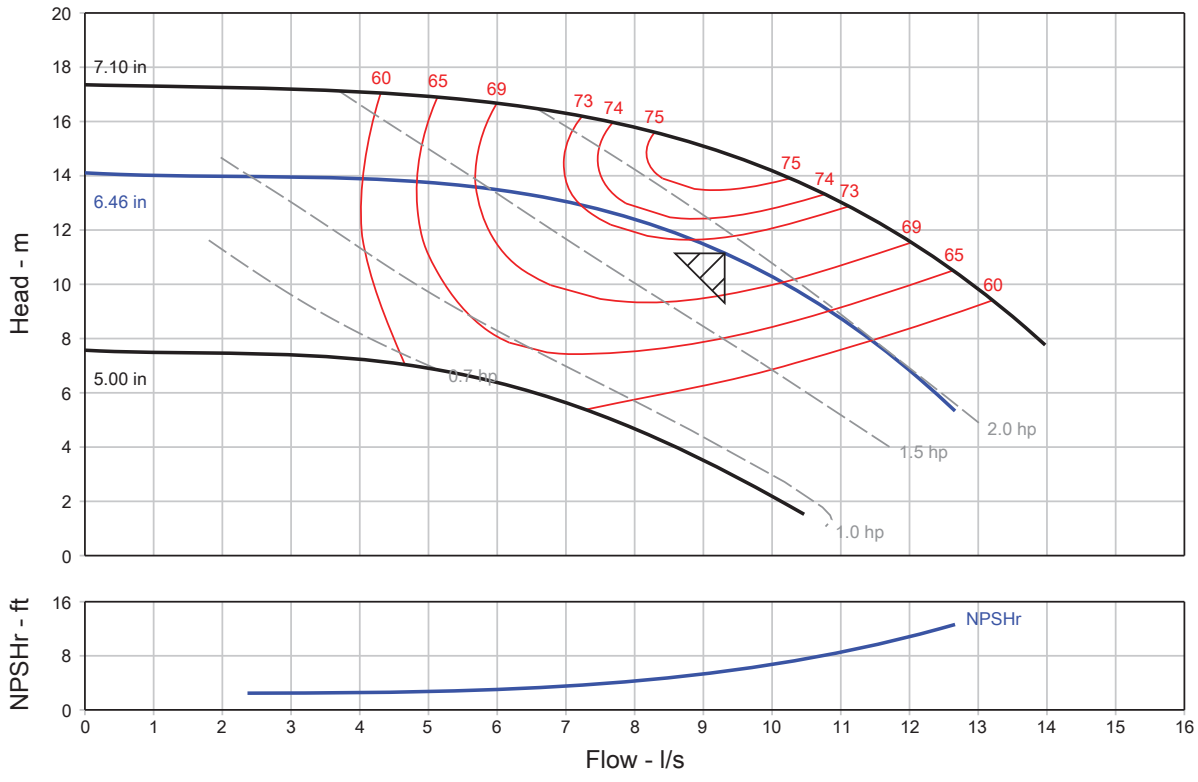

SPEC 23 21 23 PUMP SCHEDULE DRAWING M802

GRUNDFOS Canada Inc. (GCA) · 2941 Brighton Rd. · Oakville, ON L6H 6C9
phone: (905) 829-9533 · fax: (905) 829-9512 · www.GrundfosExpressSuite.com

PACO Series VL - In-Line Centrifugal Pump, Close Coupled

QUOTE NUMBER / ID 20180530-TD-HJ-001	UNIT TAG P-1.3 & P-1.4	VL 25709

MATERIALS OF CONSTRUCTION			
PART	**MATERIAL**	**PART**	**MATERIAL**
Rotation Options	Clockwise	Impeller Washer	S.S., AISI-303
Base/Stand Type	No Stand Provided	Impeller Key	Steel, AISI 1045
Connections	125# ANSI	Sleeve Material	Bronze, III932, C89835 or No Sleeves
Wear Ring Material	NiAl-Bronze, ASTM-B148, C95500	Wear Ring Type	Case Wear Ring
Pump Coatings	Standard Paint	Packing Gland	Not Applicable
NSF-50 Certification	Not Required	Lantern Ring	None
NSF-61 Certification	Not Required	Seal Type	Type 21
Motor Drip Canopy	Provided	Casing	Cast Iron, ASTM-A48, CL 30
Seal Material	Ceramic/Carbon/Buna	O-Rings	Buna N
Motor Shaft	Steel, AISI 1045 or S.S	Seal Flush Options	External Flush, plastic tubing
Backplate/Seal Plate	Cast Iron, ASTM-A48, CL 30	Motor Bracket	Cast Iron, ASTM-A48, CL 30
Gaskets	Vegetable Fiber	Impeller	Silicon Bronze, ASTM-B584, C87600
Casing Bolts	Steel, Grade 5	Impeller Cap Screw	S.S., AISI-303
Comments			

* All materials based on STANDARD configuration

Construction Datasheet

Project name	: 20180530-TD-HJ-001	Tag Number	: P-1.3 & P-1.4
Consulting engineer	:	Service	:
Customer	:	Model	: 25709 VL
Customer ref. / PO	:	Quantity	: 1
Quote Number / ID	: 20180530-TD-HJ-001	Quoted By (Sales Office)	: Grundfos Canada Inc. (GCA)
Date last saved	: May 30, 2018 8:39 AM	Quoted By (Sales Engineer)	: H J

Construction

Nozzle	Size (in.)	Nozzle Configuration	Pos'n
Suction	2.5	125# ANSI	Side
Discharge	2.5	125# ANSI	Side

Orientation / Configuration	: Vertical
Rotation	: Clockwise
Wear Ring Configuration	: Single - Case
Discharge Elbow Size	: -
Subplate	: -
Sump Depth (feet)	: -
Bearing Frame	: -
Bearing Frame Foot	: -
Bearing Type (Radial/Thrust)	: In motor
Bearing Lubrication	: Regreasable
Thrust Bearing	: -
Intermediate Bearing	: -
Lower Bearing	: -
Bearing Housing Accessories	: -
PACO Construction code	: 16-25709-130101-1552P

Baseplate, Coupling and Guard

Baseplate	: Not Applicable
Drip Pan	: -
Coupling	: -
Guard	: OSHA Approved

Seal & Packing Construction

Sealing Method	: Single Seal, Type 21S
Seal Material	: Buna Carbon Ceramic SS-Spring and Hardware
Packing Gland	: -
Lantern Ring	: -
Recirculation Lines	: Copper Tubing with Brass Fittings

Weights (Approx.)

Pump	: 91.00 lb
Baseplate	: -
Driver	: 51.00 lb
Estimated Shipping gross weight	: 142.0 lb

Motor Information

Manufacturer	: Baldor
Frame Size	: 145JM
Power	: 2.00 hp
RPM	: 1800 rpm
Enclosure	: ODP
Operating Power Supply	: 200/3/60
Efficiency	: Premium
Service factor	: 1.15
Motor Application	: General Purpose
Motor Options/Accessories	: -
Cord Length (feet)	: -

Materials

Case	: Cast Iron, ASTM A48 - Class 30
Motor Bracket	: Cast Iron, ASTM-A48, CL 30
Impeller	: Silicon Bronze, ASTM B584 C87600 (B21)
Impeller Cap Screw and Washer	: Stainless Steel, AISI-303
Impeller Key	: Steel, Cold Drawn C1018
Case wear ring	: Tin Bronze, ASTM B584-90500 (B18)
Impeller wear ring	: -
Pump Shaft	: Steel, AISI-1040
Sleeve	: Bronze, III932, C89835
Line Shaft	: -
Column	: -
Discharge Pipe	: -
Discharge Elbow	: -
Suction Elbow	: -
Subplate	: -
Hardware	: Steel, Grade 5
O Rings	: Buna N
Pump Coatings	: Standard Manufacturers Paint

General Arrangement

Project name	: 20180530-TD-HJ-001	Tag Number	: P-1.3 & P-1.4
Consulting engineer	:	Service	:
Customer	:	Model	: 25709 VL
Customer ref. / PO	:	Quantity of pumps	: 1
Quote Number / ID	: 20180530-TD-HJ-001	Quoted By (Sales Office)	: Grundfos Canada Inc. (GCA)
Date last saved	: May 30, 2018 8:39 AM	Quoted By (Sales Engineer)	: H J

Do not install pump larger than 215JM in vertical piping.

Pressure and drain tap locations are approximate.

Suction and discharge flanges, are cast per 250# ANSI thickness and diameter. All flanges are flat face. Some holes may be threaded because of nut clearances.

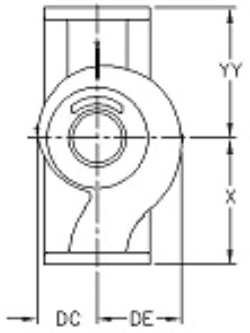

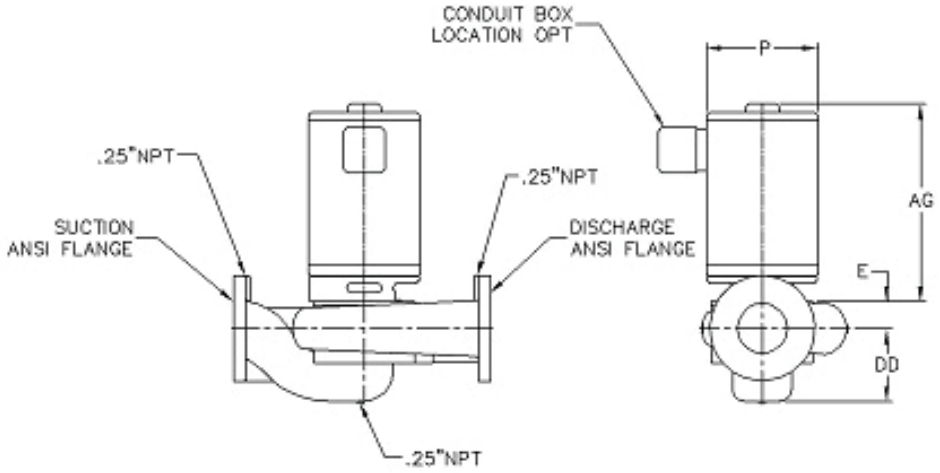

NOT FOR CONSTRUCTION, Unless certified and referenced on order

Units	Frame	S x D (in.)	AG (Max)	DC	DD	DE	E	P (Max)	X	YY	Weight ea
inches	**145JM**	**2.5 X 2.5**	**18.00**	**4.75**	**5.84**	**5.50**	**1.75**	**8.00**	**8.50**	**8.50**	**142.0**

Conditions of Service		Motor Data			
Flow: 9.31 l/s	Fluid: Cold Water	HP: 2	Encl: ODP	Phase: 3	Efficiency: Premium
TDH: 11.14 m	Temp.: 68.00 deg F	RPM: 1765 rpm	Hz: 60	Voltage: 200	S.F.: 1.15

GRUNDFOS

Company name: Grundfos Canada
Created by: Louis Pelletier
Phone:
Email: lpelletier@grundfos.com
Date: 5/30/2018

Position	Count	Description
	1	**UPS 40-80/4 F**

TAG: P-1.6
HYDRONIC PUMP



Product photo could vary from the actual product

Product No.: 96404950

The pump is of the canned rotor type, i.e. pump and motor form an integral unit without shaft seal and with only two gaskets for sealing.
The bearings are lubricatd by the pumped liquid.

In order to avoid problems in connection with disposal, great importance has been attached to using as few different materials as possible.

SPEC 23 21 23
PUMP SHEDULE
DRAWING M802

The pump is characterized by:

* 3 speed motor.
* Ceramic radial bearings.
* Carbon axial bearing.
* Stainless steel rotor can, bearing plate and rotor cladding.
* Aluminium alloy stator housing.
* Cast iron pump housing.
* Stator with built-in thermal switch.

The motor is a 3-phase motor.

The pump is supplied with a standard module in the terminal box.
The standard module is to be connected to the mains supply via external contactor.

Controls:

Relay:	without relay

Liquid:

Pumped liquid:	Water
Liquid temperature range:	14 .. 248 °F
Liquid temperature during operation:	140 °F
Density:	61.35 lb/ft³

Technical:

Actual calculated flow:	2.971 l/s
Resulting head of the pump:	6.364 m
Approvals on nameplate:	CUL

Materials:

Pump housing:	Cast iron EN-JL1040 ASTM 35 B - 40 B
Impeller:	Stainless steel DIN W.-Nr. 1.4301 AISI 304

Installation:

Range of ambient temperature:	32 .. 104 °F
Maximum operating pressure:	145.04 psi
Flange standard:	USA Oval
Type of connection:	F

GRUNDFOS

Company name: Grundfos Canada
Created by: Louis Pelletier
Phone:
Email: lpelletier@grundfos.com
Date: 5/30/2018

Position	Count	Description

TAG: P-1.6
HYDRONIC PUMP

Pipe connection:	GF 40/43
Pressure stage:	145 psi
Port-to-port length:	13 1/2 in
Electrical data:	
Power input in speed 1:	305 W
Power input in speed 2:	370 W
Max. power input:	550 W
Main frequency:	60 Hz
Rated voltage:	3 x 208-230 V
Current in speed 1:	1 A
Current in speed 2:	1.2 A
Current in speed 3:	1.98 A
Cos phi in speed 1:	0,77
Cos phi in speed 2:	0,77
Cos phi:	0,7
Number of poles:	4
Enclosure class (IEC 34-5):	X4D
Insulation class (IEC 85):	H
Winding resistance:	46.5 - 61.0 ohm
Others:	
Net weight:	47.6 lb
Gross weight:	53.4 lb
Shipping volume:	3.46 ft³
Country of origin:	DE
Custom tariff no.:	8413.70.10.90

GRUNDFOS

Company name: Grundfos Canada
Created by: Louis Pelletier
Phone:
Email: lpelletier@grundfos.com
Date: 5/30/2018

96404950 UPS 40-80/4 F 60 Hz

TAG: P-1.6

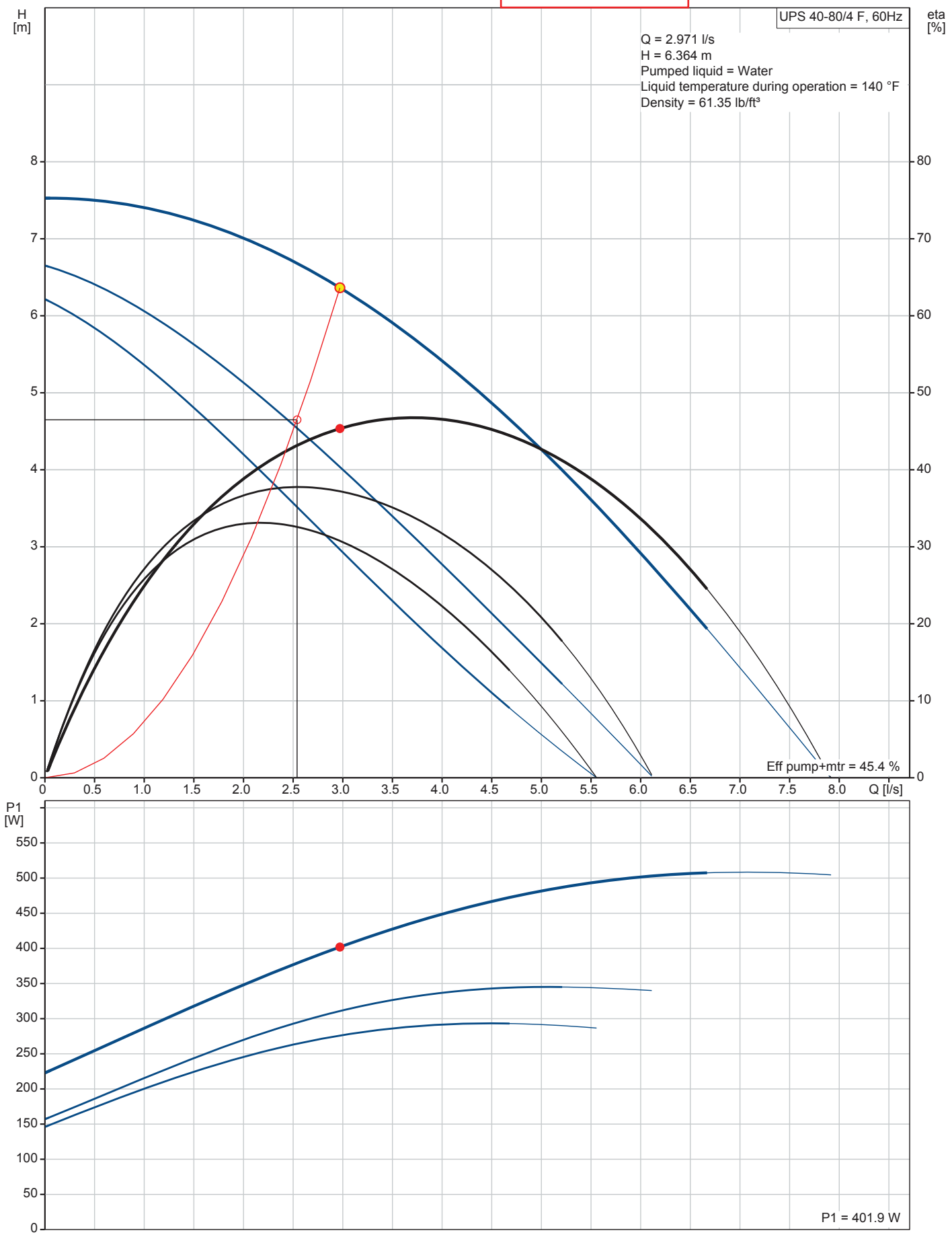

Company name: Grundfos Canada
Created by: Louis Pelletier
Phone:
Email: lpelletier@grundfos.com
Date: 5/30/2018

96404950 UPS 40-80/4 F 60 Hz

TAG: P-1.6
HYDRONIC PUMP

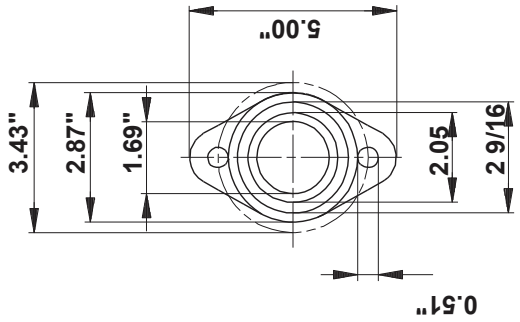

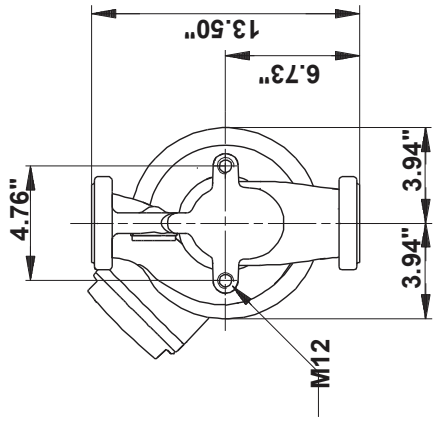

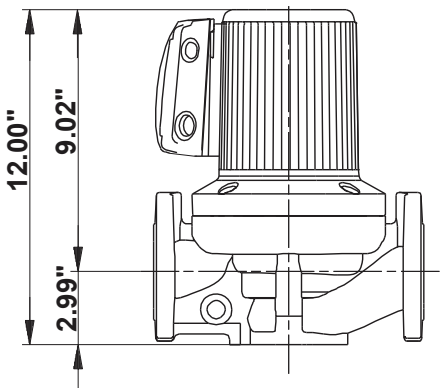

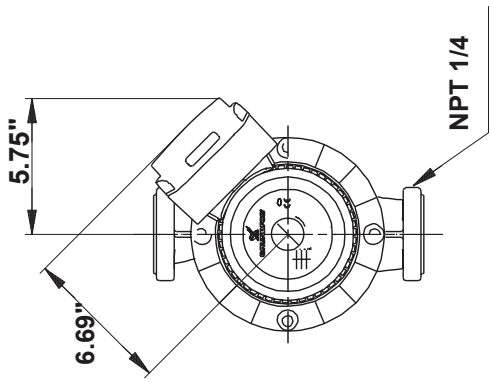

Note! All units are in [mm] unless otherwise stated.
Disclaimer: This simplified dimensional drawing does not show all details.

GRUNDFOS **PRODUCT GUIDE**

Large UP, UPS

Series 200 circulator pumps
60 Hz

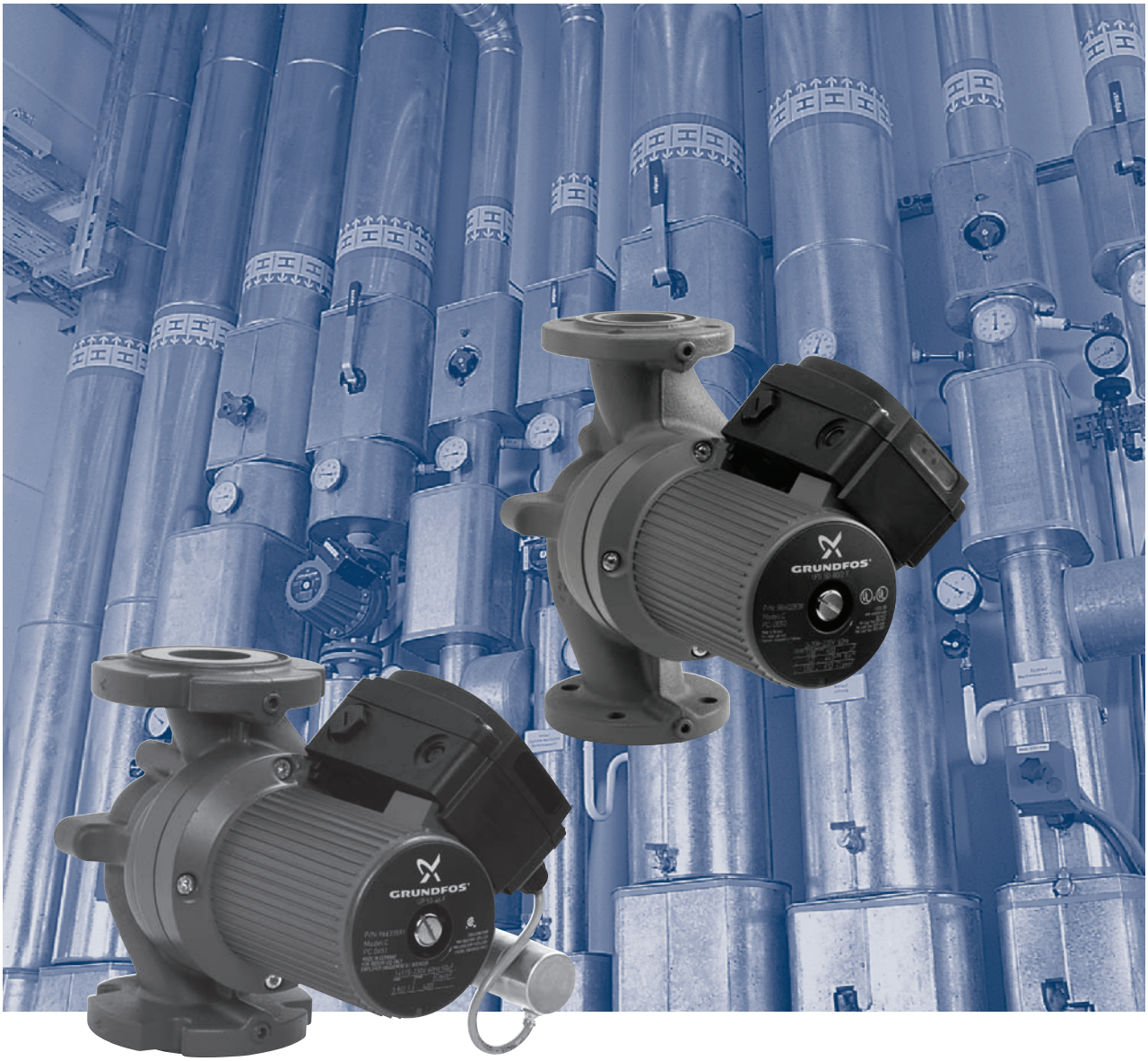

BE > THINK > INNOVATE >

GRUNDFOS

Table of contents

1. Product introduction 3
Introduction 3
Terminal box modules 3
Applications 3
Features and benefits 3
Identification 4

2. Product overview 5
Performance range, UPS pumps 5
Performance range, UP pumps 6

3. Product range 7
Pump overview 7

4. Cross-reference guide 8
Armstrong, B&G and TACO to Grundfos 8

5. Construction 10
Construction 10
Material specification 11
Sectional drawing 11
Motor 12
Stator housing 12
Rotor can 12
Shaft with rotor 12
Bearing plate 12
Impeller 12
Pump housing 12

6. Operating conditions 13
Pumped liquids 13
Temperature limits 13
Other technical data 13
Electrical data 14
Supply voltage tolerances 14
Terminal box 14
Insulation class 14

7. Functions 15
Functions 15
Description of functions 16
Standard module indicator lights 17
Variable frequency drive operation 17
Pumps with protection module 17
Protection module indicator lights 18
Pumps with relay module 18
Relay module indicator lights 18
Signal output of relay module 18
Two pumps plumbed in parallel 18

8. Technical data 19
Technical data, UPS 19
Curve conditions 24

9. Curve charts and technical data 25

10. Accessories and spare parts 62
Packaged fitting sets 62
Terminal box electrical components 62

11. Further documentation 63
WebCAPS 63
WinCAPS 64

1. Product introduction

Introduction

The Grundfos UP(S) Series 200 line of wet rotor circulators is unique to commercial building services. Most competitor pumps are dry runners. UP(S) wet rotor circulators, on the other hand, are designed so that the water being pumped surrounds the rotor, cooling and lubricating the shaft and bearings.



GrA3223, GrA3217

Fig. 1 Grundfos UP, UPS Series 200 circulator pumps

Wet rotor design eliminates the need for a fan to cool the motor. Fans are often a source of noise and vibrations that can resonate throughout a building via the pipework. Eliminating the fan results in very quiet operation.

UP(S) Series 200 pumps are available in cast iron construction for closed (heating and air conditioning) and bronze construction for open (domestic hot water) systems.

Both cast iron and bronze UP(S) Series 200 pumps utilize laser-welded stainless steel impellers to achieve high pump efficiency.

The standard UP(S) motors are suitable for variable speed drive applications.

Terminal box modules

UPS pumps are equipped with a standard or protection module in the terminal box. Pumps with standard module must be connected to the power supply via an external contactor, whereas pumps with protection module can be connected directly to the power supply.

For further information about the different modules, see pages 17 through 18.

Applications

The pumps are designed for circulation of liquids in heating and air-conditioning systems. They can also be used in domestic hot-water systems.

Applications for the UP(S) pumps include:

- Heating systems for apartments, colleges, hospitals, institutions and schools
- hot water recirculation for hotels, colleges institutions, hospitals, and apartments
- large residential heating
- snow melt.

To ensure optimum operation, the dimensioning range of the system must fall within the performance range of the pump. See sections *6. Operating conditions* on page 13 and *8. Technical data* on page 19.

Pumped liquids

Grundfos UP, UPS Series 200 pumps are suitable for pumping thin, clean, non-aggressive and non-explosive liquids, not containing any solid particles, fibers or mineral oil.

In domestic hot-water systems it is advisable to use bronze pumps only for water with a degree of hardness lower than approx. 14°dH. For water with a higher degree of hardness, a Grundfos TP dry-rotor pump is recommended.

The pumps must **not** be used for the transfer of flammable liquids such as diesel oil and gasoline.

For liquid temperature, see section *6. Operating conditions* on page 13.

Features and benefits

The Grundfos range of UP(S) Series 200 circulator pumps offer many beneficial features:

- Quiet
- maintenance-free
- UPS pumps have a 2 or 3 speed switch, which increases the comfort level for the application
- small profile (one piece vs. three piece)
- sealless, which eliminates worries about hot water leakage
- pumped water lubricates the shaft and bearings so there is no oil to leak
- no couplers to change.

Identification

Type key

Example	UPS	50	-40	(/2)	F	(B)
Type range - UP: Single-speed pump - UPS: Two- or three-speed pump						
Nominal flange diameter [mm]						
Max. head [dm]*						
Number of motor poles (stated if available both as 2- and 4-pole motor)						
Pump with flanges						
Pump with bronze housing						

*With the exception of the following pump types, where the number is to be considered as a reference number:
UP 53-45, UP 53-46, UPS 53-55/57 and UPS 75-69

Nameplate

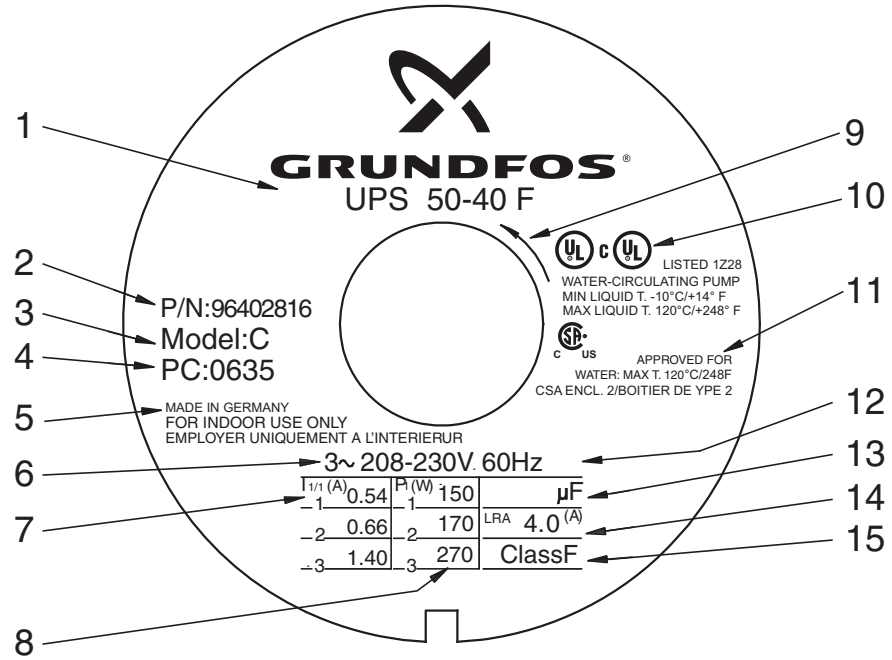

TM03 7712 4806

Fig. 1 Example of nameplate

Pos.	Description
1	Type code
2	Product number
3	Model designation
4	Production code (year + week)
5	Country of origin
6	Number of phases and rated voltage
7	Current at speeds 1, 2, 3
8	Power at speeds 1, 2, 3
9	Direction of rotation
10	Approvals
11	Temperature limits
12	Rated frequency
13	Capacitor size
14	**L**ocked **R**otor **A**mps
15	Insulation class

2. Product overview

Performance range, UPS pumps

The curves show maximum performance curves for the UPS range:

- single-voltage pumps
- two- and three-speed pumps.

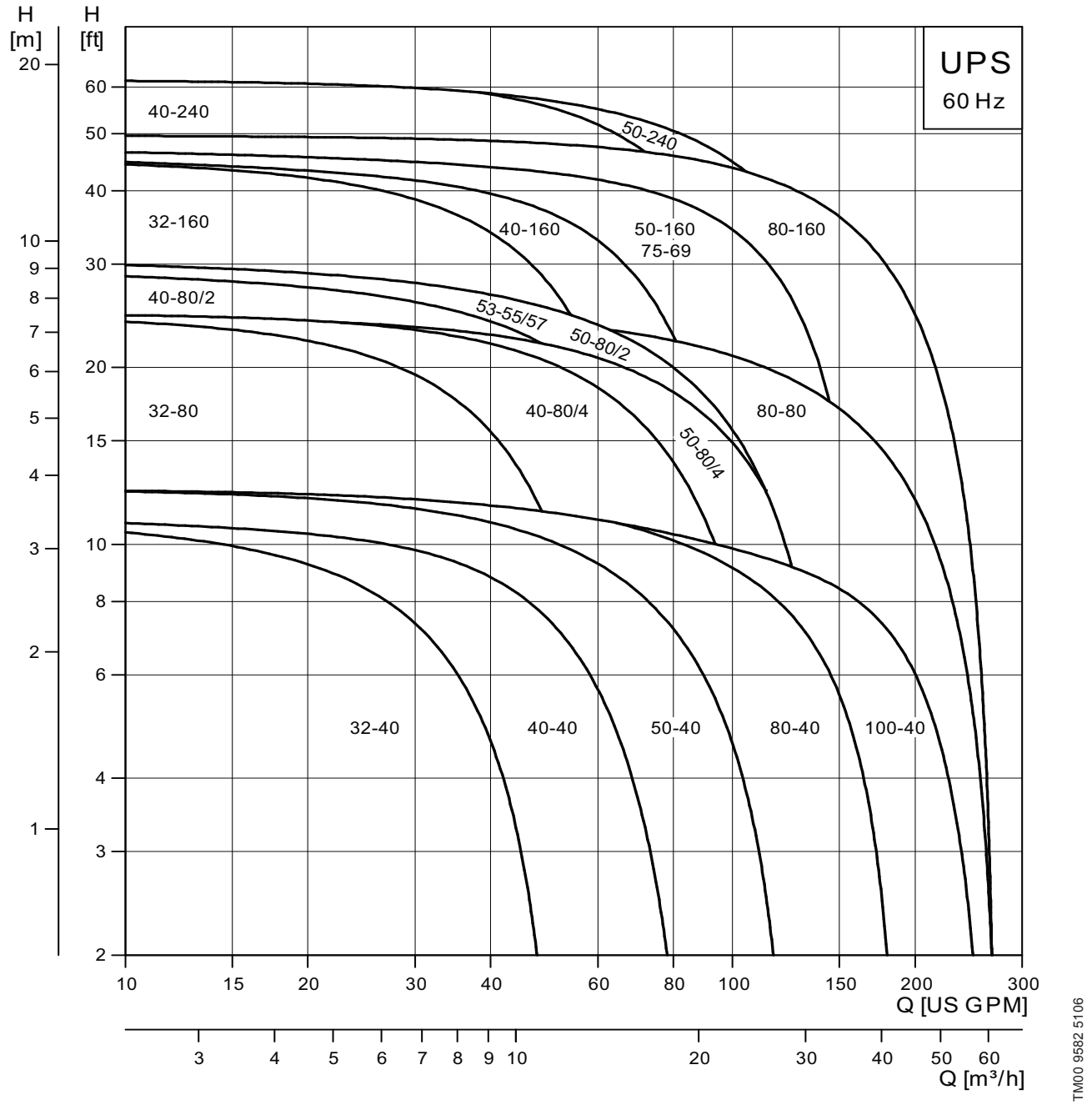

Performance range, UP pumps

The curves show maximum performance curves for the UP range:

- dual-voltage pumps
- single-speed pumps.

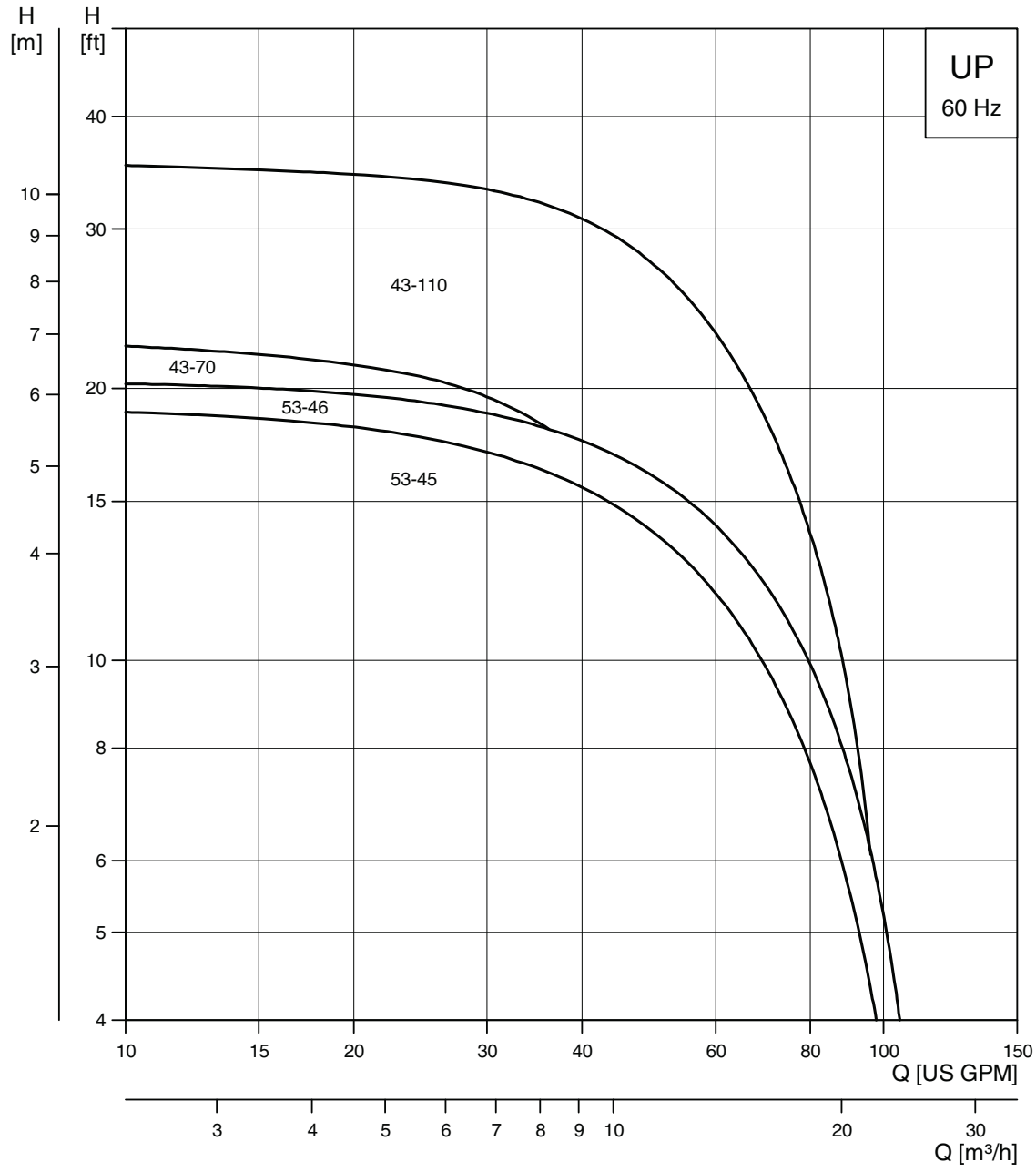

TM02 5598 4706

3. Product range

UPS range

Pump type	Voltage [V]					Poles	
	1 x 115	1 x 230	3 x 208-230	3 x 460	3 x 575★	2	4
UPS 32-40 F	●	●	●	●	●	—	●
UPS 32-80 F	●	●	●	●	●	●	—
UPS 32-160 F	●	●	●	●	●	●	—
UPS 40-40 F	●	●	●	●	●	—	●
UPS 40-80/2 F	●	●	●	●	●	●	—
UPS 40-80/4 F	●	●	●	●	●	—	●
UPS 40-160 F	●	●	●	●	●	●	—
UPS 40-240 F	—	●	●	●	●	●	—
UPS 50-40 F	●	●	●	●	●	—	●
UPS 50-80/2 F	●	●	●	●	●	●	—
UPS 50-80/4 F	●	●	●	●	●	—	●
UPS 50-160 F	—	●	●	●	●	●	—
UPS 50-240 F	—	—	●	●	●	●	—
UPS 53-55/57 F	●	●	●	●	●	●	—
UPS 75-69 F	—	●	●	●	●	●	—
UPS 80-40 F	—	—	●	●	●	—	●
UPS 80-80 F	—	—	●	—	—	—	●
UPS 80-160 F	—	—	●	●	●	●	—
UPS 100-40 F	—	—	●	●	●	—	●

★Canada only

UP range

Pump type	Voltage [V]	Poles	
	1 x 115/230 V	2	4
UP 43-70 F	●	●	—
UP 43-110 F	●	●	—
UP 53-45 F	●	●	—
UP 53-46 F	●	●	—

Pump overview

Model	Flow [US gpm]	Head [ft]	Ph	Max. [rpm]	Flange	Flange type
UP 43-70 F	15-100	1-23	1	3450	1.5" non ANSI 2 bolt w/ (2) 0.5" dia. holes	GF 40/43
UP 43-110 F	15-105	1-37	1	3450	1.5" non ANSI 2 bolt w/ (2) 0.5" dia. holes	GF 40/43
UP 53-45 F	15-100	1-23	1	3450	2", 2.5", 3" non ANSI 4 bolt w/ (4) 0.63" dia. holes	GF 53
UP 53-46 F	15-105	1-37	1	3450	2", 2.5", 3" non ANSI 4 bolt w/ (4) 0.63" dia. holes	GF 53
UPS 32-40/4	9-52	1-11	1-3	1750	1.25" non ANSI 2 bolt w/ (2) 0.5" dia. holes	GF 15/26
UPS 32-80/2	9-67	1-25	1-3	3450	1.25" non ANSI 2 bolt w/ (2) 0.5" dia. holes	GF 15/26
UPS 32-160/2	9-76	1-45	1-3	3450	1.5" non ANSI 2 bolt w/ (2) 0.5" dia. holes	GF 40/43
UPS 40-40/4	13-85	1-11	1-3	1750	1.5" non ANSI 2 bolt w/ (2) 0.5" dia. holes	GF 40/43
UPS 40-80/2	13-105	1-30	1-3	3450	1.5" non ANSI 2 bolt w/ (2) 0.5" dia. holes	GF 40/43
UPS 40-80/4	13-120	1-25	1-3	1750	1.5" non ANSI 2 bolt w/ (2) 0.5" dia. holes	GF 40/43
UPS 40-160/2	13-110	1-46	1-3	3450	1.5" non ANSI 2 bolt w/ (2) 0.5" dia. holes	GF 40/43
UPS 40-240/2	13-130	1-62	1-3	3450	1.5" non ANSI 2 bolt w/ (2) 0.5" dia. holes	GF 40/43
UPS 50-40/4	20-125	1-12	1-3	1750	2" non ANSI 4 bolt w/ (4) 0.56" dia. holes	GF 50
UPS 50-80/4	20-160	1-24	1-3	1750	2" non ANSI 4 bolt w/ (4) 0.56" dia. holes	GF 50
UPS 50-80/2	20-150	1-30	1-3	3450	2" non ANSI 4 bolt w/ (4) 0.56" dia. holes	GF 50
UPS 50-160/2	20-170	1-46	1-3	3450	2" non ANSI 4 bolt w/ (4) 0.56" dia. holes	GF 50
UPS 50-240/2	20-180	1-62	3	3450	2" non ANSI 4 bolt w/ (4) 0.56" dia. holes	GF 50
UPS 53-55/57 F	20-150	1-30	1-3	3450	2", 2.5", 3" non ANSI 4 bolt w/ (4) 0.56" dia. holes	GF 53
UPS 75-69 F	20-170	1-46	1-3	3450	3" ANSI 125# R.F.	GF 80
UPS 80-40/4	30-200	1-13	3	1750	3" ANSI 125# R.F.	GF 80
UPS 80-80/4	30-260	1-25	3	1750	3" ANSI 125# R.F.	GF 80
UPS 80-160/2	30-275	1-49	3	3450	3" ANSI 125# R.F.	GF 80
UPS 100-40/4	30-270	1-12	3	1750	4" ANSI 125# R.F.	GF 100

4. Cross-reference guide

Armstrong, B&G and TACO to Grundfos

Manufacturer	Model	Port-to-port length [in]	Flange size [in]	Grundfos model	Port-to-port length [in]	Flange size [in]
Armstrong	ARMflo E21	8.50	1.50	UP43-110F	8.50	1.50
	ARMflo E23	8.50	1.50	UP43-110F	8.50	1.50
	S 45	10.00	2.50, 3	UP53-45F★	9.88	2.00, 2.50, 3.00
	S 46	10.00	2.50, 3	UP53-46F★	9.88	2.00, 2.50, 3.00
	S 55	12.00	3.00	UPS53-55/57F★	11.88	2.00, 2.50, 3.00
	S 57	12.00	3.00	UPS53-55/57F★	11.88	2.00, 2.50, 3.00
	S 69	14.25	3.00	UPS75-69F★	14.00	2.00, 2.50, 3.00
	H51	11.50	1.00	UPS32-80/2★★	11.00	0.75 to 1.50
	H52	11.50	1.00	UPS32-80★★	11.00	0.75 to 1.50
	H53	11.50	1.50	UPS40-160/2★	11.50	1.50
	H54	11.50	2.00	UPS50-80/2★	11.50	2.00
	H63	13.50	1.50	UPS32-160/2★	13.50	1.50
	H64	13.50	1.50	UPS32-160/2★	13.50	1.50
	H65	13.50	1.50	UPS40-240/2★	13.50	1.50
	H66	14.00	2.00	UPS50-160/2★	14.00	2.00
	H67	14.00	2.00	UPS50-160/2★	14.00	2.00
	H68	14.00	2.00	UPS50-240/2★	14.00	2.00
	1050 1B (0.25 Hp)	11.50	1.00	UPS32-80/2★★	11.00	0.75 to 1.50
	1050 1-1/4B (0.25 Hp)	11.50	1.25	UPS32-80/2★★	11.00	0.75 to 1.50
	1050 1-1/2B (0.25 Hp)	11.50	1.50	UPS32-80/2★★	11.00	0.75 to 1.50
	1050 2B (0.33 Hp)	11.50	2.00	UPS50-80/4★	11.50	2.00
	1050 2B (0.50 Hp)	11.50	2.00	UPS50-80/4★	11.50	2.00
	1050 2B (0.75 Hp)	11.50	2.00	UPS50-80/4★	11.50	2.00
	1060 1-1/2 D (0.50 Hp)	13.50	1.50	UPS32-160/2★	13.50	1.50
	1060 1-1/2 D (0.75 Hp)	13.50	1.50	UPS32-160/2★	13.50	1.50
	1060 1-1/2 D (1.50 Hp)	13.50	1.50	UPS40-240/2★	13.50	1.50
	1060 2D (0.75 Hp)	14.00	2.00	UPS50-160/2★	14.00	2.00
	1060 2D (1.00 Hp)	14.00	2.00	UPS50-160/2★	14.00	2.00
	1060 2D (1.50 Hp)	14.00	2.00	UPS50-160/2★	14.00	2.00
	1060 2D (2.00 Hp)	14.00	2.00	UPS50-240/2★	14.00	2.00
TACO	120	11.00	2.00	UPS32-40/4★★	11.00	0.75 to 1.50
	131	13.63	3.00	UP53-45F★★	10.00	2.00, 2.50, 3.00
	133	13.63	3.00	UPS53-55/57★★	11.88	2.00, 2.50, 3.00
	1600	10.25	1.50	UPS32-80/2★	11.00	1.50
	1610	10.25	1.50	UPS32-80/2★	11.00	1.50
	1612	13.50	1.50	UPS32-160/2★	13.50	1.50
	1614	13.50	1.50	UPS32-160/2★	13.50	1.50
	1616	14.50	2.00	UPS40-240/2★★	13.50	1.50
	1630	13.50	2.00	UPS50-80/4★★	11.50	2.00
	1632	13.50	2.00	UPS50-160/2★	14.00	2.00
	1634	13.50	2.00	UPS50-160/2★	14.00	2.00
	1636	16.50	2.00	UPS50-240/2★★	14.00	2.00
	1638	16.50	2.00	UPS50-240/2★★	14.00	2.00

★ Bronze version to be used in open systems.
★★ Replacement model requires piping and/or flange modification.

Disclaimer: This cross-reference is a guide only. Use individual technical data sheets for correct comparison.

Manufacturer	Model	Port-to-port length [in]	Flange size [in]	Grundfos model	Port-to-port length [in]	Flange size [in]
B&G	2-1/2"	10.00	2.50	UP53-45F★	9.88	2.00, 2.50, 3.00
	LD3	10.00	3.00	UP53-45F★	9.88	2.00, 2.50, 3.00
	HD3	10.00	3.00	UP53-46F★	9.88	2.00, 2.50, 3.00
	PD-35	12.00	3.00	UPS53-55/57F★	11.88	2.00, 2.50, 3.00
	PD-37	12.00	3.00	UPS53-55/57F★	11.88	2.00, 2.50, 3.00
	PD-38	14.50	3.00	UPS75-69F★	14.00	2.00, 2.50, 3.00
	PD-40	14.50	3.00	UPS50-160/2★★	14.00	2.00
	601	11.00	1.00	UPS32-80/2★	11.00	0.75 to 1.50
	602	11.00	1.00	UPS32-80/2★	11.00	0.75 to 1.50
	603	11.00	1.00	UPS50-80/2★★	11.50	2.00
	604	11.00	1.25	UPS32-80/2★	11.00	0.75 to 1.50
	609	11.50	1.50	UPS40-160/2★	11.50	1.50
	610	11.50	2.00	UPS50-80/4★	11.50	2.00
	621	13.50	2.00	UPS40-80/4	13.50	1.50
	614	13.50	1.50	UPS40-240/2	13.50	1.50
	615	13.50	2.00	UPS50-160/2	14.00	2.00
	616	13.50	2.00	UPS50-160/2	14.00	2.00
	622	13.50	1.50	UPS32-160/2	13.50	1.50
	623	13.50	1.50	UPS40-240/2	13.50	1.50
	617	13.50	1.50	UPS40-240/2	13.50	1.50
	624	14.00	2.00	UPS50-160/2	14.00	2.00
	625	14.00	2.00	UPS50-240/2	14.00	2.00
	60-11	11.00	1.25	UPS32-80/2★	11.00	0.75 to 1.50
	60-13	11.50	1.50	UPS40-160/2★	11.50	1.50
	60-14	11.50	2.00	UPS50-80/2★	11.50	2.00
	60-15	13.50	1.50	UPS32-160/2	13.50	1.50
	60-16	13.50	1.50	UPS32-160/2	13.50	1.50
	60-17	13.50	1.50	UPS40-240/2	13.50	1.50
	60-19	14.00	2.00	UPS50-160/2	14.00	2.00
	60-20	14.00	2.00	UPS50-160/2	14.00	2.00
	60-21	14.00	2.00	UPS50-240/2	14.00	2.00

★ Bronze version to be used in open systems.
★★ Replacement model requires piping and/or flange modification.

Disclaimer: This cross-reference is a guide only. Use individual technical data sheets for correct comparison.

5. Construction

Construction

UP(S) Series 200 pumps are of the canned rotor type, i.e. pump and motor form an integral unit without shaft seal and with only two gaskets for sealing.

The bearings are lubricated by the pumped liquid.

Attention has been focused on using as few materials as possible, and the use of materials that might cause problems in connection with disposal have been omitted.

Features:

- UPS motors are two- or three-speed motors.
  UP motors are single-speed dual-voltage motors.
- Stainless steel rotor can, bearing plate and rotor cladding.
- Stator housing in aluminum alloy.
- Cast iron or bronze pump housing.
- Stator with built-in thermal overload switch.

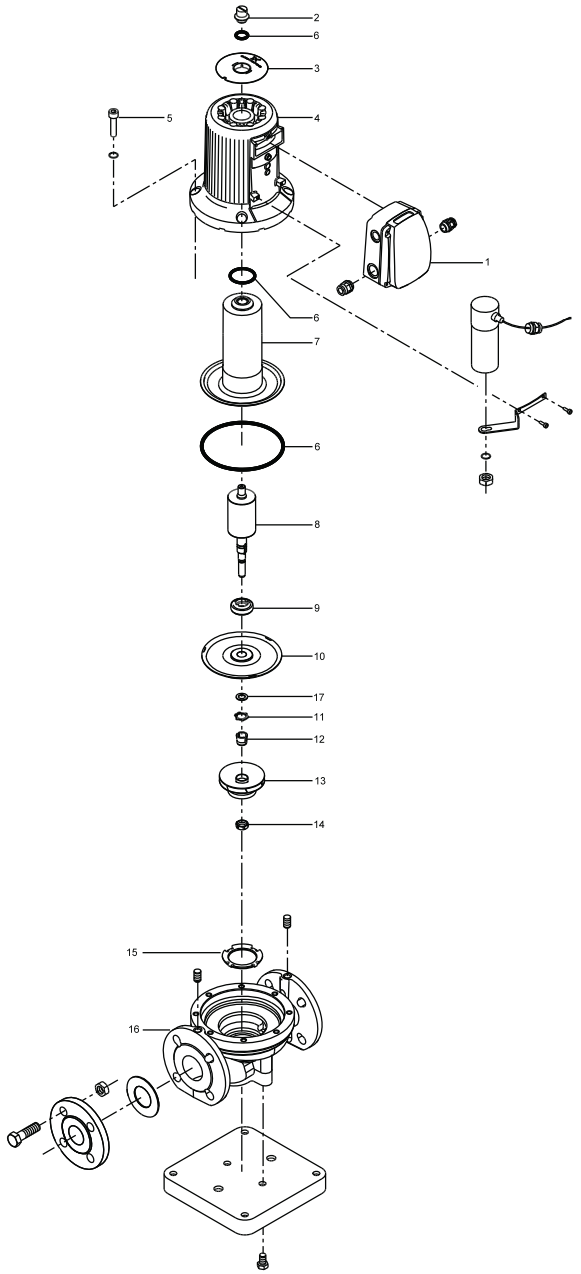

TM03 7880 5106

Fig. 2 Exploded view of a UP(S) Series 200 pump

Material specification

Pos.	Description	Material	AISI/ASTM
1	Terminal box	Composite PA66	
2	Inspection screw	Brass with nickel	
3	Nameplate	Composite PA66	
4	Stator housing	Aluminium AlSi10Cu$_2$	
	Stator windings	Copper wire	
	Stator caps	Composite PETP	
5	Cheese-head screw	Steel 8.8	
6	O-rings	EPDM rubber	
7	Outer bearing ring	Aluminium oxide/SiC	
	Rotor can	Stainless steel	AISI 304
8	Shaft (cast-iron pumps) Shaft (bronze pumps)	Stainless steel	AISI 303 AISI 316
	Rotor cladding	Stainless steel	AISI 304
	Bearing	Tungsten carbide	

Pos.	Description	Material	AISI/ASTM
9	Thrust bearing	Carbon MY 106	
10	Bearing plate	Stainless steel	AISI 304
	Inner bearing ring	Aluminium oxide/SiC	
11	Stop ring	Stainless steel	
12	Split cone	Stainless steel	AISI 303
13	Impeller	Stainless steel	AISI 304
14	Nut	Stainless steel	AISI 303
15	Neck ring	Stainless steel/PTFE	AISI 304
16	Pump housing	Cast iron EN-GJL-250	
		Bronze CuSn10, DIN 1705	ASTM B505 and B271
17	Anti-friction ring	PTFE	
18	Splash protector	Stainless steel	AISI 303

Sectional drawing

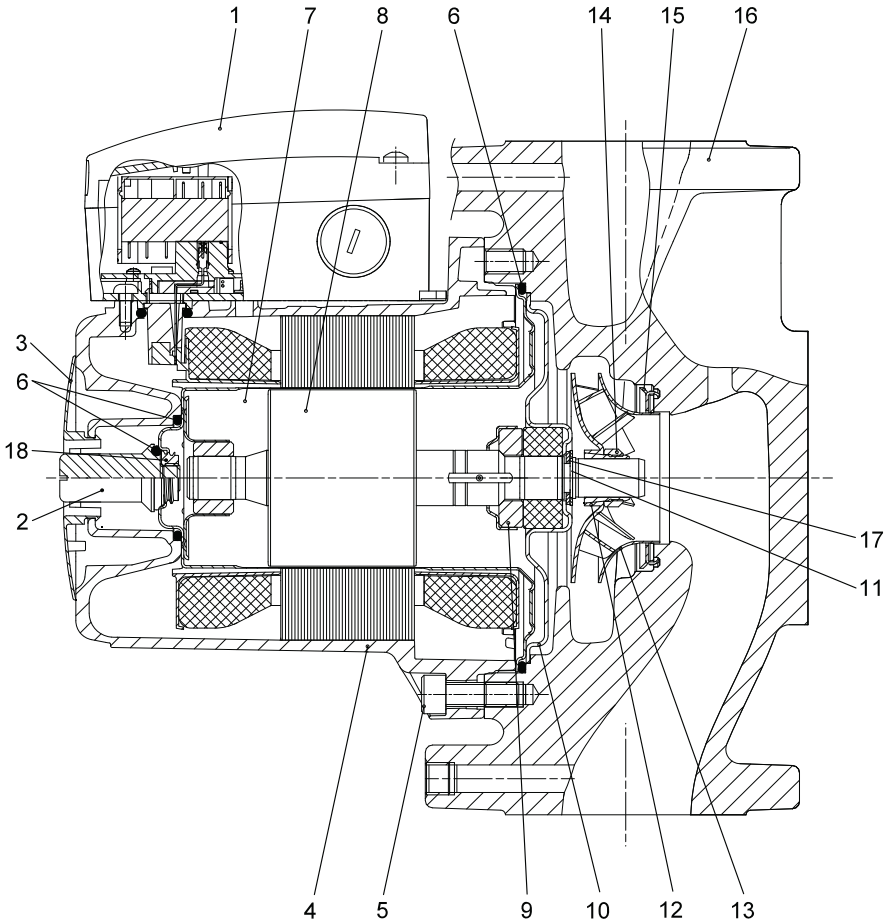

Fig. 3 Sectional view

Motor

The motor, pos. 4, is a 2- or 4-pole, asynchronous squirrel-cage motor. As the motor is cooled by the pumped liquid, the noise level is very low.

Stator housing

Pressure die-cast aluminum stator housing can be turned to change the position of the terminal box.

The stator housing has eight drain holes to enable condensed water to escape. The vent hole under the terminal box allows the water to evaporate from the stator. The drain holes must point downwards.

The permissible terminal box positions are shown in the drawing below. The positions apply to both vertical and horizontal mounting.

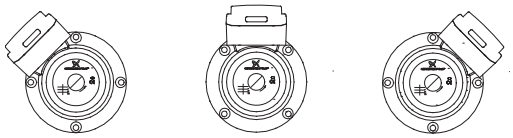

TM02 1398 1101

Fig. 4 Possible terminal box positions

Note: The terminal box must only be turned to the above positions.

The drawing below shows the standard box position.

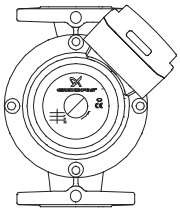

TM03 2260 4005

Fig. 5 Standard terminal box position

The nameplate can be turned in steps of 45°.

The positions of the terminal box and the nameplate are changed as described above.

The stator wires are self-bonding. The wires and the terminal box are connected by a terminal plug.

The stator incorporates a thermal overload switch for protection of the motor if the winding temperature becomes too high.

Rotor can

The rotor can (pos. 7) is made of drawn steel sheet and fitted with an inspection screw directly at the top.

There is an O-ring seal between the inspection screw and the rotor can. For reasons of safety, the hole for the inspection screw will deflect a possible jet of liquid if the inspection screw is removed.

The outer radial bearing is fitted into the top of the rotor can.

Shaft with rotor

The shaft (pos. 8) is made of stainless steel and equipped with two tungsten carbide bearings.

To further improve the internal circulation of the pumped liquid in the rotor can, the shaft of 4-pole motors is fitted with a small rotor impeller.

The rotor is made of soft-annealed iron lamination and provided with copper or brass bars. The short-circuit rings are made of copper.

The rotor is encapsulated in a thin stainless steel cladding and dynamically balanced.

The thrust bearing is secured to the shaft in a spherically flexible suspension.

Bearing plate

The bearing plate (pos. 10) is made of stainless steel.

The inner radial bearing is pressed into the bearing plate, ground and honed. The relatively large bearing plate surface means that motor heat is effectively carried away by the pumped liquid.

Impeller

The stainless steel impeller (pos. 13) is of the radial type with curved blades. It is secured to the shaft by a split cone and nut (left-hand thread).

Pump housing

The pump housing (pos. 16) is available in cast iron or bronze. All pump housings are flanged for the individual markets.

See also section *4. Cross-reference guide* on page 8 and section *5. Construction* on page 10 concerning flanges and port-to-port lengths.

The pump housing is of the in-line type. A stainless steel/PTFE neck ring minimizes the recirculation and improves pump efficiency.

The bottom of the housing has threaded holes for fastening to a baseplate.

6. Operating conditions

Pumped liquids

CAUTION: This pump is intended for use with water only.

Grundfos UP(S) pumps can be used to circulate

- Potable hot water
- Water for hydronic heating
- Water/glycol mixtures up to 50/50
- Cooling water.

In domestic hot-water systems it is advisable to use a bronze pump (UP(S) model) only for water with a degree of hardness lower than 14 grains per gallon of hardness. For water with a higher degree of hardness, a direct coupled TP pump is recommended.

If the pump is installed **in a heating system**, the water should meet the requirements of accepted standards on water quality in heating systems.

In water/glycol mixtures, in order to prevent the glycol from degrading, temperatures above those for which the fluid is rated should be avoided and time spent at high temperatures minimized.

It is also important that the system is cleaned and flushed prior to the installation of the glycol mixture.

In order to avoid problems with corrosion or precipitation, the glycol fluids should be checked and maintained regularly. If further dilution of the supplied glycol is required, follow the requirements of the supplier of the glycol.

The pump is lubricated and cooled by the liquid being pumped. Therefore, the pumped liquid must always be allowed to circulate through the pump. Extended periods without circulation will cause premature wear to the bearings and excessive motor heat. The pumped liquid must also meet the following requirements.

The pumping of liquids with densities or kinematic viscosities higher than those of water will cause

– a considerable pressure drop
– a drop in the hydraulic performance
– a rise in the power consumption.

In these situations, contact Grundfos for assistance.

Temperature limits

Ambient air temperature	32 °F to 104 °F (0 °C to 40 °C)	
Fluid temperature, open systems	140 °F (60 °C).	
Fluid temperature, closed systems	UPS pumps:	248 °F (120 °C).
	UP pumps:	230 °F (110 °C).

Other technical data

Relative humidity: Max. 95 %.

Sound-pressure level: The sound-pressure level of the pump is lower than 41 dB(A) (reference: 20 mPa).

Max. working pressure: 145 psi (10 bar).

Approvals: See the pump nameplate.

Inlet pressure

To avoid cavitation noise, the following minimum pressures are required at the pump suction flange:

UP(S) model	Liquid temperature					
	167 °F (75 °C)		194 °F (90 °C)		230 °F (110 °C)	
	[psi]	[ft]	[psi]	[ft]	[psi]	[ft]
UPS 32-40	0.7	1.6	2.2	5.1	21.0	48.5
UPS 32-80	0.7	1.6	5.1	11.8	23.9	55.2
UPS 32-160	11.6	26.8	16.0	37.0	34.1	78.8
UPSD 40-40	0.7	1.6	4.4	10.2	23.2	53.6
UPS 40-80/4	0.7	1.6	1.5	3.5	18.1	41.8
UPS40-80/2	6.5	15.0	10.9	25.2	29.0	67.0
UPS 40-160	5.1	11.8	9.4	21.7	27.6	63.8
UPS 40-240	11.6	26.8	16.0	37.0	34.1	78.8
UPS 50-40	0.7	1.6	2.9	6.6	21.8	50.4
UPS 50-80/4	0.7	1.6	4.4	10.2	23.2	53.6
UPS 50-80/2	4.4	10.2	8.7	20.1	26.8	61.9
UPS 50-160	11.6	26.8	16.0	37.0	34.1	78.8
UPS 50-240	10.2	23.6	14.5	33.5	32.6	75.1
UPS 53-55/57	4.4	10.2	8.7	20.1	26.8	61.9
UPS 75-69	11.6	26.8	16.0	37.0	34.1	78.8
UPS 80-40	11.6	26.8	16.0	37.0	34.1	78.8
UPS 80-80	14.5	33.5	18.9	43.7	37.0	85.5
UPS 80-160	21.8	50.4	26.1	60.3	43.5	100.5
UPS 100-40	27.6	63.8	31.9	73.7	50.0	115.5
UP 43-70F	0.7	1.6	4.8	11.0	15.4	35.6
UP 43-110	3.6	8.4	8.2	19.0	18.9	43.7
UP 53-45	2.9	6.6	7.5	17.3	18.1	41.8
UP 53-46	1.1	2.5	5.8	13.4	16.4	37.9

Electrical data

Supply voltage and frequency

UPS: 115 V, 230 V, 1-phase 60 Hz, 208-230 V, 460 V, 575 V, 3 phase 60 Hz.

UP: 115 V, 230V, 1-phase 60 Hz, 460 V, 575 V, 3-phase 60Hz.

Back-up fuse: Max. 10 A.

Enclosure class: IP 44 indoor use only.

Supply voltage tolerances

The motors meet the requirements to temperature rise at - 6 / +6 %.

Furthermore, the motors have been tested at -10 / +10 % of the voltage range. During these tests, the motors operate without problems and without being thermally cut out.

The motor voltage tolerances are intended for power supply voltage variations. They should not be used for running motors at other voltages than those stated on the name plates.

Variable speed applications

All 3 x 460 V, 3 x 575 V and 3-speed 3 x 208-230 V pumps with standard module are suitable for frequency converter applications. Please refer to section *Variable frequency drive operation* on page 17 for further information.

Terminal box

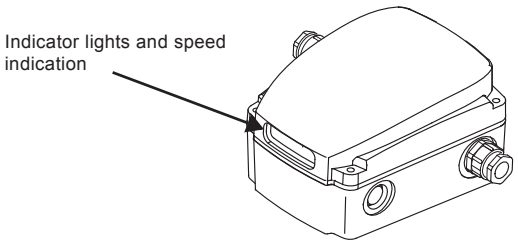

Fig. 6 Terminal box

The terminal box with cover (pos. 1) is made from black composite material.

The terminal box is equipped with:

- 1 x 1½" NPT screwed cable entry for mains connection, to be fitted during installation.
- 1 x M16 screwed cable entry for capacitor connection (only single-phase pumps)
- 2 x indicator lights (single-phase pumps with standard module have just one).
  Note: UPS pumps only.
- window for indication of speed.
  Note: UPS pumps only.

The terminal box is fastened to the stator housing with screws and connected to the stator by a terminal plug.

Insulation class

Pump type	Insulation class	
UPS	**1 x 115 V 1 x 230 V**	**3 x 208-230 V 3 x 460 V 3 x 575 V**
32-40	F	F
32-80	F	F
32-160	H	F
40-40	F	F
40-80/4	H	H
40-80/2	F	F
40-160	H	H
40-240	H	H
50-40	F	F
50-80/4	H	H
50-80/2	H	F
50-160	H	H
50-240	—	H
53-55/57	H	F
75-69	H	H
80-40	—	H
80-80	—	H
80-160	—	H
100-40	—	H

Pump type	Insulation class
UP	**1 x 115/230 V**
43-70	F
43-110	F
53-45	F
53-46	F

Thermal overload switch

Voltage	250 V AC
Current	cos phi = 1.0: 2.5 A cos phi = 0.6: 1.6 A

Start/stop input (relay module)

External potential-free contact.

Maximum load: 250 V, 1.5 mA.
Minimum load: 100 V, 0.5 mA.

Operating/fault signal output (relay module)

Internal potential-free changeover contact.

Maximum load: 250 V, 2 A, AC.
Minimum load: 5 V, 100 mA, DC.

7. Functions

Functions

		UPS terminal box includes				Additional terminal box options		External contactor required	Number of speeds
Pump model	Voltage options	Speed switch	Standard module	Protection module	Terminal block	Protection module	Relay module		
UPS 32	1 x 115/230	■		■			●		3
	3 x 208/230	■	■			●	●	◆	3
	3 x 460	Δ			■			❑	2
	3 x 575 ★	Δ			■			❑	2
UPS 40	1 x 115/230	■		■			●		3
	3 x 208/230	■	■			●	●	◆	3
	3 x 460	Δ			■			❑	2
	3 x 575 ★	Δ			■			❑	2
UPS 50	1 x 115/230	■		■			●		3
	3 x 208/230	■	■			●	●	◆	3
	3 x 460	Δ			■			❑	2
	3 x 575 ★	Δ			■			❑	2
UPS 53-55/57	1 x 115/230	■		■			●		3
	1 x 230	■		■			●		3
	3 x 208/230	■	■			●	●	◆	3
	3 x 460	Δ			■			❑	2
	3 x 575 ★	Δ			■			❑	2
UPS 75-69	1 x 230	■		■			●		3
	3 x 208/230	■		■			●		3
	3 x 460	■	■			●	●	◆	3
	3 x 575 ★	Δ			■			❑	2
UPS 80	1 x 115/230	■		■	■		●		3
	3 x 208/230	■	■			●	●	◆	3
	3 x 460	Δ			■			❑	2
	3 x 575 ★	Δ			■			❑	2
UPS 100	1 x 115/230	■					●		3
	3 x 208/230	■	■	■		●	●	◆	3
	3 x 460	Δ			■			❑	2
	3 x 575 ★	Δ			■			❑	2
UP 43-70	1 x 115/230				■			❑	1
UP 43-110	1 x 115				■			❑	1
UP 53-45	1 x 115/230				■			❑	1
UP 53-46	1 x 115/230				■			❑	1

★ Canada only
■ Standard
Δ The speed is changed by reconfiguring the jumper positions, located in the terminal box.
● Optional
❑ Required
◆ External contactor is not required when using the Protection Module option.
Standard module: Indicator lights with no motor protection. For motor protection, use Protection Module for 1 x 115/230 V and 3 x 208/230 V units or use an external contactor.
Protection module: Indicator lights with built-in motor protection. Connect directly to line voltage.
Note: Pumps with protection module must not be connected to a variable frequency drive (VFD).
Relay module: Indicator lights with signal output for external control or fault indication (1 x 115/230 V or 3 x 208/230 V units only).
External contactor required: Pump must be connected to line voltage via an external contactor. The contactor is to be connected to the pump's build-in thermal overload terminals. The speed is changed by orientation of the internal jumpers.

Description of functions

Three-speed pumps

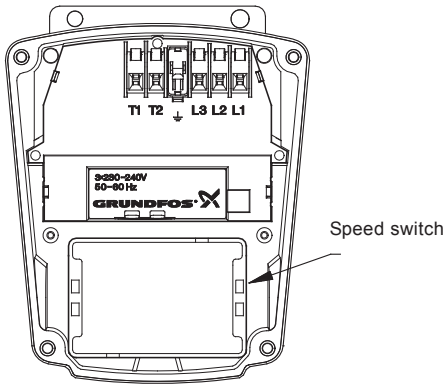

Fig. 7 3 x 208/230V terminal box

By means of the speed switch, the pump performance can be adjusted to suit the system in question.

For 1 x 115/230 V and 3 x 208/230 V three-speed pumps only. The module is located inside the terminal box. It has three positions:

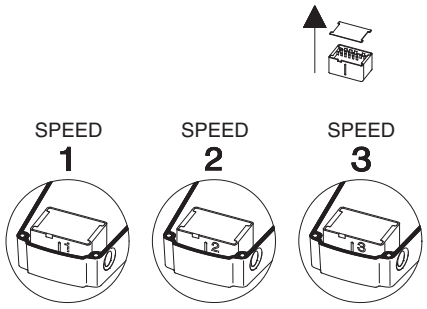

Fig. 8 Speed switch module

Switch position	Speed in % of maximum speed	
	Single-phase pumps	Three-phase pumps
1	approx. 60%	approx. 70%
2	approx. 80%	approx. 85%
3	100%	100%

Note: UP pumps runs at 100%.

Change to a lower speed enables considerable reduction in energy consumption and less noise in the system.

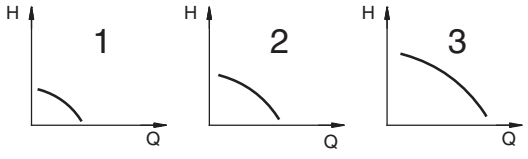

Fig. 9 Pump performance at the three speeds

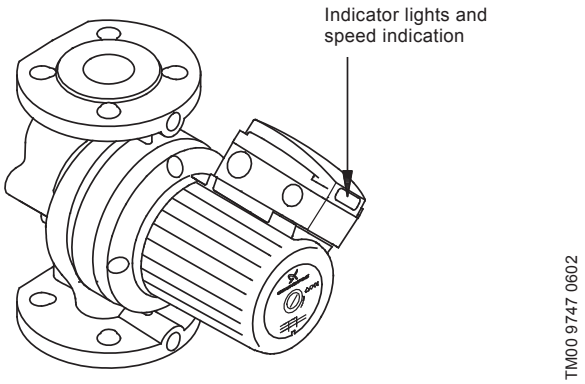

Fig. 10 UPS Series 200 pump with terminal box mounted

Two-speed pumps

All UPS pumps with 3 x 460 V & 575 V terminal boxes are fitted with a special two-speed terminal block.

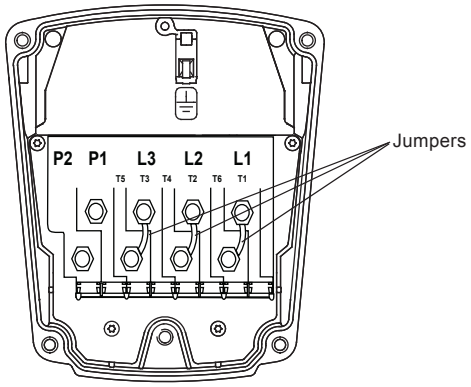

Fig. 11 3 x 460 V & 575 V terminal box

The speed is changed by changing the jumper positions.

The pump must be connected to the mains via an external contactor. The contactor is to be connected to the pump's built-in thermal overload switch (terminals P1 and P2) to protect the pump against overheating at both speeds.

Speed selection (two-speed, 3 x 460 V and 575 V)

The speed setting in the terminal box can be changed to two positions. The speed in the two positions appears in the table below

Speed step	Speed in % of maximum
1	Approx. 75%
2	100%

Single-speed pumps

UP pumps (1 x 115/230 V)

UP pumps are single-speed pumps with a 1 x 115 V/230 V terminal box with a dual-voltage terminal block. See fig. 12.

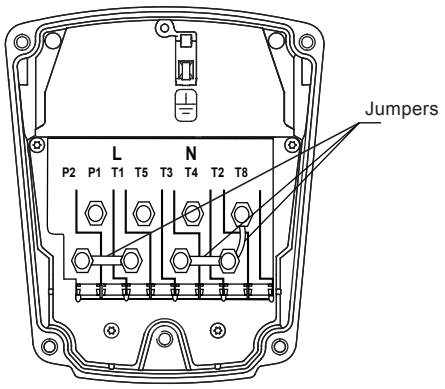

Fig. 12 1 x 115/230 V terminal box

The voltage is changed by changing the orientation of the jumpers. See fig. 12.

The pump must be connected to the power supply via an external switch.

The UP pumps are equipped with a built-in, automatically resetting terminal overload switch, protecting the pump at both 115 V and 230 V. The built-in terminal overload switch (terminals P1 and P2) can optionally be connected to external overload protection.

Pumps with standard module

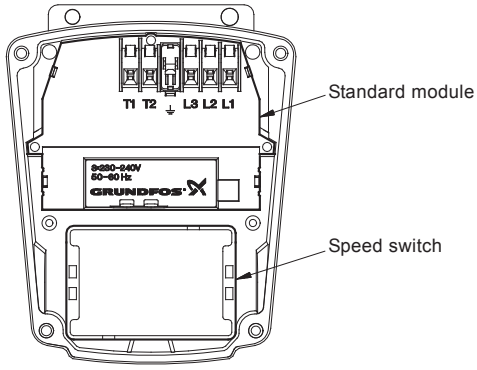

Fig. 13 Terminal box with standard module

The standard module is standard in three-phase pumps with three speeds and forms connection between supply terminals and motor.

The pumps with standard module must be connected to the power supply via an external contactor.

For motor protection the contactor is to be connected to the pump's built-in thermal overload switch to protect the pump against overheating at all three speeds.

Standard module indicator lights

The indicator lights on pumps with standard module show whether the pump is live, or whether the phase sequence of three-phase pumps is wrong.

Single-phase pumps

Single-phase pumps incorporate a green indicator light only:

Indicator light	Description
On	The electricity supply has been switched on.
Off	The electricity supply has been switched off, or the pump has been cut out by the thermal overload switch.

Three-phase pumps

Three-phase pumps have a green and a red indicator light:

Indicator lights		Description
Green	Red	
Off	Off	The electricity supply has been switched off, or the pump has been cut out by the thermal overload switch.
On	Off	The electricity supply has been switched on.
On	On	The electricity supply has been switched on. The direction of rotation is wrong.

Variable frequency drive operation

All 3 x 460 V, 3 x 575 V and 3-speed 3 x 208-230 V pumps with standard module are suitable for variable frequency drive (VFD) applications. Please note the following:

- Even if the red indicator light is on, the pump is operating normally.
- Pumps fitted with other modules than the standard module must not be connected to a VFD.
- Depending on the VFD type, this may cause increased acoustic noise from the motor. Furthermore, it may cause the motor to be exposed to detrimental voltage peaks.
- The motor must be protected against voltage peaks higher than 650 V between the motor terminals.

Acoustic noise and detrimental voltage peaks can be reduced by fitting an LC filter between the VFD and the motor.

Pumps with protection module

The protection module is standard for single-phase UPS pumps and available for 3 x 208-230 V UPS pump models only as an option.

When fitted with a protection module, the pump can be connected directly to the power supply switch as it will be protected by the built-in overload protection.

The protection module incorporates two indicator lights.

Protection module indicator lights

Indicator lights		Description
Green	Red	
Off	Off	The pump has been stopped. The electricity supply has been switched off.
On	Off	The pump is operating.
On	On	Three-phase pumps only: The pump is operating, but the direction of rotation is wrong.
Off	On	The pump has been cut out by the thermal overload switch.

Note: Pumps with protection module must not be connected to a variable frequency drive.

Pumps with relay module

The relay module is available for UPS pumps as an option for 1 x 115/230 V and 3 x 208-230 V units.

The module enables direct connection of the pump to an external power supply switch. Furthermore, the module has a signal output for external operating or fault indication. By means of a selector switch the output can be set to activation during operation or fault.

The pump is connected directly to the power supply as the pump incorporates overload protection at all three speeds.

Note: Pumps with relay module must not be connected to a variable frequency drive (VFD).

If the pump has been cut out by the thermal overload switch, it will restart automatically when it has cooled to normal temperature, provided the external on/off contact is closed.

Note: If the thermal overload switch has cut out the pump three times within a short time, the relay must be reset manually by switching off the electricity supply.

Relay module indicator lights

The relay module indicator lights provides detailed operating and fault indications.

All pumps with relay module incorporate a green and a red indicator light. Functions, see table in Signal output of relay module.

Signal output of relay module

The relay module has a signal output for external operating or fault indication.

By means of the selector switch, the signal output can be set to activation during operation or fault.



Operation: The output functions as operating indication between terminals 2 and 3.



Fault: The output functions as fault indication between terminals 1 and 3.

Indicator lights		Signal output set to		Description
Green	Red	Operation	Fault	
Off	Off			The pump has been stopped. The electricity supply has been switched off, or a phase is missing.
On	Off			The pump is operating.
On	On			**Only three-phase pumps**: The pump is operating, but with wrong direction of rotation.
Off	On			The pump has been cut out by the thermal overload switch.
Flash-ing	Off			The pump has been stopped by an external on/off switch.
Flash-ing	On			The pump is or has been cut out by the thermal overload switch, and it has been stopped by an external on/off switch.

Two pumps plumbed in parallel

Operating modes

Both pumps must be fitted with a relay module.

In addition to the signal functions, the signal output of the relay module for two pumps in parallel can be used for controlling the operating mode of pump 1 and 2.

It is possible to choose between three operating modes:

1. **Alternating operation.** The pumps operate alternately as duty and standby pump, respectively. Changeover takes place every 24 hours. If the duty pump is cut out due to a fault, the standby pump will automatically start. During changeover both pumps will be running for a short period to ensure a low-noise changeover.
2. **Standby operation.** The pumps operate continuously as duty and standby pump, respectively. If the duty pump is cut out due to a fault, the standby pump will automatically start at a signal from the output of the duty pump. The sequence can be changed to make the standby pump operate as duty pump.
3. **Single-pump operation.** The pumps run independently without communicating with each other.

VL, VLS

Vertical inline centrifugal pumps

Installation and operating instructions

VL

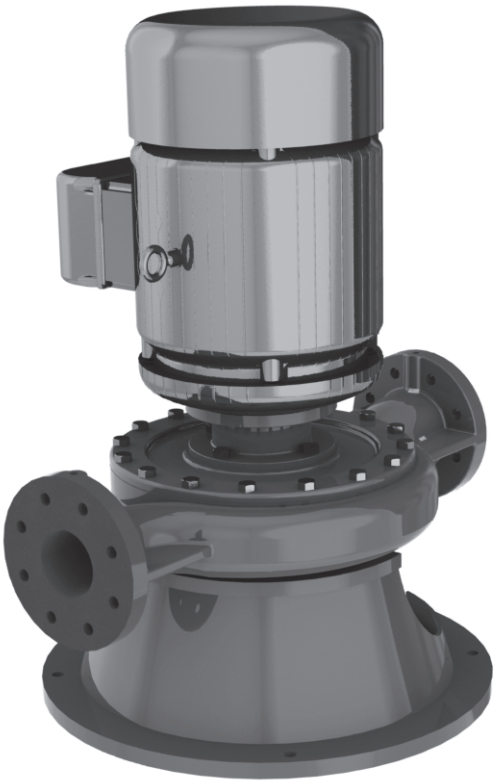

VLS



be
think
innovate

GRUNDFOS

Original installation and operating instructions.

CONTENTS

		Page
1.	**Symbols used in this document**	**2**
2.	**Terms and conditions of sale**	**3**
2.1	The contract	3
2.2	Price	3
2.3	Payment terms	3
2.4	Acceptance and inspection	3
2.5	Title and risk of loss	3
2.6	Patent or trademark information	3
2.7	Changes	3
2.8	Cancellation or termination	3
2.9	Delivery and delays	3
2.10	Warranty	4
2.11	Technical documents	4
2.12	Limitation of liability	4
2.13	This company is an equal opportunity employer	4
2.14	Law and arbitration	4
3.	**Installation - mechanical**	**5**
3.1	Pump identification	5
3.2	Receiving	5
3.3	Temporary storage	5
3.4	Location	5
3.5	Mounting of pump	5
3.6	Floor mounted pumps (VL, VLS)	5
3.7	Suspended pumps (VL, VLS)	5
3.8	Suspended pumps (VL only)	5
3.9	Piping - general	5
3.10	Suction (inlet) piping	6
3.11	Discharge (outlet) piping	6
3.12	Shaft sealing - general comments	6
3.13	Mechanical seals	6
4.	**Installation - electrical**	**7**
4.1	Motor, general	7
4.2	Installation wiring	7
5.	**Operation**	**7**
5.1	Priming	7
5.2	Pre-start checklist	7
5.3	Motor rotation	7
5.4	Starting the pump	8
5.5	Voltage regulation	8
5.6	Pump shutdown	8
5.7	Short duration shutdown	8
5.8	Extended period shutdown	8
6.	**Maintenance**	**8**
6.1	Motor lubrication	8
6.1.1	Standard conditions	8
6.1.2	Severe conditions:	8
6.1.3	Extreme conditions	8
7.	**Disassembly**	**9**
7.1	Preparation for disassembly	9
7.2	Seal replacement (VL)	9
7.3	Seal replacement (VLS)	9
7.4	Sleeve Replacement (VL)	10
7.5	Wear ring replacement	10
7.6	Reassembly of pumps	10
8.	**Ordering parts**	**10**
9.	**Exploded views**	**11**
9.1	Type VL, 56J fractional hp motor (less than 1 hp)	11
9.2	Type VL-JM, integral hp motor (1 hp or greater)	11
9.3	Type VL-JP, motor (packed pumps)	12
9.4	Type VLS, cross section and parts list	12
10.	**Troubleshooting**	**13**
10.1	Cause codes	13
10.2	Possible causes	13

1. Symbols used in this document

The following symbols may be used in this document.



Warning

If these safety instructions are not observed, it may result in personal injury.



Warning

If these instructions are not observed, it may lead to electric shock with consequent risk of serious personal injury or death.



Warning

When pumping hazardous liquids, special attention must be paid to the risk of personal injury.



Warning

The surface of the product may be so hot that it may cause burns or personal injury.



Warning

The sound pressure level is so high that hearing protection must be used.

Caution ***If these safety instructions are not observed, it may result in malfunction or damage to the equipment.***

Note ***Notes or instructions that make the job easier and ensure safe operation.***

2. Terms and conditions of sale

2.1 The contract

The Contract shall be comprised of the following terms, together with such terms and conditions as are set forth in Seller's written proposal or quotation (the "Quotation"), including any documents, drawings or specifications incorporated therein by reference, and any additional or different terms proposed in Buyer's purchase order (the "Purchase Order") that are accepted by Seller in writing, which together shall constitute the entire agreement between the parties, provided, however, that preprinted terms on Buyer's purchase order or invoice shall not apply and Seller gives notice of objection to such terms. An offer by Seller in its Quotation that does not stipulate an acceptance date is not binding. This Contract shall be deemed to have been entered into upon written acknowledgment of the Purchase Order by an officer or authorized representative of Seller, which may not be modified, supplemented, or waived except in a writing executed by an authorized representative of the party to be bound.

2.2 Price

The price quoted in the Quotation shall be the Purchase Price unless otherwise agreed in the Purchase Order. The Purchase Price for equipment shall include packing for shipment.
Field Services shall be provided at Seller's standard rates.
All other costs, including packing for storage, freight, insurance, taxes, customs duties and import/export fees, or any other item not specified in the Contract, shall be paid by Buyer unless separately stated in the Quotation and included in the price quoted. Any sales, use, or other taxes and duties imposed on the transaction or the equipment supplied shall be paid or reimbursed by Buyer.

2.3 Payment terms

Payment shall be due within 30 days of the date of Seller's invoice in U.S. funds unless otherwise agreed. If Buyer does not observe the agreed dates of payment, Buyer shall pay interest to Seller on overdue amounts at a rate that is the higher of: 9 % per annum or a rate 5 % in excess of the rate borne from time to time by new issues of six-month United States Treasury bills.
Seller shall be entitled to issue its invoice for the Purchase Price for equipment upon the earlier of shipment, or notice to Buyer that Seller is ready to ship, and for services, upon completion.
If the Purchase Price exceeds $250,000 USD, Buyer shall pay the Purchase Price in Progress payments as follows: Fifteen percent (15 %) upon submittal of general arrangement drawings, thirty five percent (35 %) after receipt of first Bowl Casting, twenty percent (20 %) after first case/bowl hydro test or bowl machining and thirty percent (30 %) after notification of ready to ship.

2.4 Acceptance and inspection

All equipment shall be finally inspected and accepted by Buyer within 14 days after delivery or such other period of time as is agreed in the Purchase Order. Buyer shall make all claims (including claims for shortages), excepting only those provided for under the warranty clause contained herein, in writing within such 14-day period or they are waived. Services shall be accepted upon completion. Buyer shall not revoke its acceptance. Buyer may reject the equipment only for defects that substantially impair its value, and Buyer's remedy for lesser defects shall be in accordance with section 10, Warranty. If tests are made by Buyer to demonstrate the ability of the equipment to operate under the contract conditions and to fulfill the warranties in section 10, Buyer is to make all preparations and incur all expenses incidental to such tests. Seller will have the right of representation at such tests at its expense, and the right to technically direct the operation of the equipment during such tests, including requiring a preliminary run for adjustments.

2.5 Title and risk of loss

Full risk of loss (including transportation delays and losses) shall pass to Buyer upon delivery, regardless of whether title has passed to Buyer, transport is arranged or supervised by Seller, or start-up is carried out under the direction or supervision of Seller. Delivery shall be ex works, INCOTERMS 2000. Loss or destruction of the equipment or injury or damage to the equipment that occurs while the risk of such loss or damage is borne by Buyer does not relieve Buyer of its obligation to pay Seller for the equipment.

2.6 Patent or trademark information

If the equipment sold hereunder is to be prepared or manufactured according to Buyer's specifications, Buyer shall indemnify Seller and hold it harmless from any claims or liability for patent or trademark infringement on account of the sale of such goods.

2.7 Changes

Buyer may request, in writing, changes in the design, drawings, specifications, shipping instructions, and shipment schedules of the equipment. As promptly as practicable after receipt of such request, Seller will advise Buyer what amendments to the Contract, if any, may be necessitated by such requested changes, including but not limited to amendment of the Purchase Price, specifications, shipment schedule, or date of delivery. Any changes agreed upon by the parties shall be evidenced by a Change Order signed by both parties.

2.8 Cancellation or termination

Buyer shall have the right to cancel the Contract upon 15 days' prior written notice to Seller, and Seller shall stop its performance upon the receipt of such notice except as otherwise agreed with Buyer. If Buyer cancels the Contract, it shall pay: (a) the agreed unit price for equipment or components completed and delivered, (b) additional material and labor costs incurred, and for engineering services supplied by Seller with respect to the canceled items, which shall be charged to Buyer at Seller's rates in effect at the time of cancellation, but which shall not exceed the contract price for such items, and (c) such other costs and expenses, including cancellation charges under subcontracts, as Seller may incur in connection with such cancellation or termination.

2.9 Delivery and delays

Seller shall use its best efforts to meet quoted delivery dates, which are estimated based on conditions known at the time of quotation. Seller shall not be liable for any nonperformance, loss, damage, or delay due to war, riots, fire, flood, strikes or other labor difficulty, governmental actions, acts of God, acts of the Buyer or its customer, delays in transportation, inability to obtain necessary labor or materials from usual sources, or other causes beyond the reasonable control of Seller. In the event of delay in performance due to any such cause, the date of delivery or time for completion will be extended to reflect the length of time lost by reason of such delay. Seller shall not be liable for any loss or damage to Buyer resulting from any delay in delivery.

2.10 Warranty

Seller warrants that the equipment or services supplied will be free from defects in material, and workmanship for a period of 12 months from the date of initial operation of the equipment, or 18 months from the date of shipment, whichever shall first occur. In the case of spare or replacement parts manufactured by Seller, the warranty period shall be for a period of six months from shipment. Repairs shall be warranted for 12 months or, if the repair is performed under this warranty, for the remainder of the original warranty period, whichever is less. Buyer shall report any claimed defect in writing to Seller immediately upon discovery and in any event, within the warranty period. Seller shall, at its sole option, repair the equipment or furnish replacement equipment or parts thereof, at the original delivery point.
Seller shall not be liable for costs of removal, reinstallation, or gaining access. If Buyer or others repair, replace, or adjust equipment or parts without Seller's prior written approval, Seller is relieved of any further obligation to Buyer under this section with respect to such equipment or parts. The repair or replacement of the equipment or spare or replacement parts by Seller under this section shall constitute Seller's sole obligation and Buyer's sole and exclusive remedy for all claims of defects. SELLER MAKES NO OTHER WARRANTY OR REPRESENTATION OF ANY KIND WITH RESPECT TO THE EQUIPMENT OR SERVICES OTHER THAN AS SPECIFIED IN THIS SECTION 10. ALL OTHER WARRANTIES, EXPRESS OR IMPLIED, INCLUDING BUT NOT LIMITED TO, THE IMPLIED WARRANTIES OF MERCHANTABILITY AND FITNESS FOR A PARTICULAR PURPOSE, ARE HEREBY DISCLAIMED. For purposes of this Section, the equipment warranted shall not include equipment, parts, and work not manufactured or performed by Seller.
With respect to such equipment, parts, or work, Seller's only obligation shall be to assign to Buyer any warranty provided to Seller by the manufacturer or supplier providing such equipment, parts or work. No equipment furnished by Seller shall be deemed to be defective by reason of normal wear and tear, failure to resist erosive or corrosive action of any fluid or gas, Buyer's failure to properly store, install, operate or maintain the equipment in accordance with good industry practices or specific recommendations of Seller, or Buyer's failure to provide complete and accurate information to Seller concerning the operational application of the equipment.

2.11 Technical documents

Technical documents furnished by Seller to Buyer, such as drawings, descriptions, designs and the like, shall be deemed provided to Buyer on a confidential basis, shall remain Seller's exclusive property, shall not be provided in any way to third parties, and shall only be used by Buyer for purposes of installation, operation and maintenance. Technical documents submitted in connection with a Quotation that does not result in a Purchase Order shall be returned to Seller upon request.

2.12 Limitation of liability

Seller shall in no event be liable for any consequential, incidental, indirect, special or punitive damages arising out of the Contract, or out of any breach of any of its obligations hereunder, or out of any defect in, or failure of, or malfunction of the equipment, including but not limited to, claims based upon loss of use, lost profits or revenue, interest, lost goodwill, work stoppage, impairment of other equipment, environmental damage, nuclear incident, loss by reason of shutdown or nonoperation, increased expenses of operation, cost of purchase of replacement power or claims of Buyer or customers of Buyer for service interruption whether or not such loss or damage is based on contract, tort (including negligence and strict liability) or otherwise. Seller's maximum liability under this Contract shall not exceed the Purchase Order amount of the equipment or portion thereof upon which such liability is based. All such liability shall terminate upon the expiration of the warranty period, if not sooner terminated.

2.13 This company is an equal opportunity employer

This agreement incorporates by reference applicable provisions and requirements of Executive Order 11246 and FAR Section 52.222- 26 (covering race, color, religion, sex and national origin); the Vietnam Era Veterans Readjustment Assistance Act of 1974 and FAR Section 52.222-35 (covering special disabled and Vietnam era veterans); and the Rehabilitation Act of 1973 and FAR Section 52.222- 36 (covering handicapped individuals).
By acceptance of this agreement Buyer certifies that it does not and will not maintain any facilities in a segregated manner, or permit its employees to perform their services at any location under its control where segregated facilities are maintained, and further that appropriate physical facilities are maintained for both sexes. Buyer agrees that it will obtain a similar certificate prior to award of any nonexempt lower-tier subcontracts.

2.14 Law and arbitration

The Contract shall be governed by the law of the State of Texas. Any disputes arising out of this Contract shall be resolved by informal mediation in any manner that the parties may agree within 45 days of written request for mediation by one party to the other. Any dispute that cannot be resolved through mediation shall be resolved by binding arbitration conducted in English in Portland, Oregon under the Commercial Rules of the American Arbitration Association except as otherwise provided in this section. The arbitration shall be conducted by three arbitrators chosen in accordance with said Rules. The arbitrators are not entitled to award damages in excess of compensatory damages. Judgment upon the award may be entered in any court having jurisdiction.

3. Installation - mechanical

Read these instructions thoroughly before installing and operating your PACO Vertical In-line Centrifugal Pump. Successful operation depends on careful attention to the procedures described in the first four sections of this manual. Keep this instruction manual handy for future use.

3.1 Pump identification

All PACO pumps are identified by catalog and serial numbers. These numbers are stamped on the pump nameplate (fig. 1) affixed to each pump volute casing, and should be referred to in all correspondence with the Company.

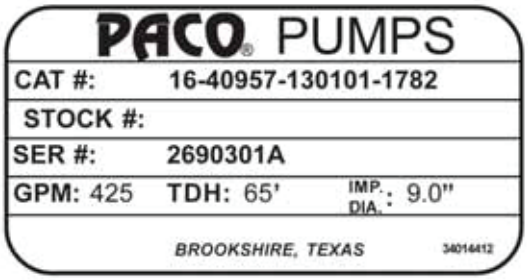

TM05 4873 2612

Fig. 1 Sample nameplate

The first digits in the Catalog Number (preceding the first hyphen) are known as the Product Code. The Product Code may be 2 or 3 digits in length. This installation and Operation Manual applies to the following Product Codes. NOTE: Hyphens may not appear on the name plate.

Product code	Description
16	Paco type VL, in line Centrifugal pump
17	Paco type VLS, in line Centrifugal pump (split coupled)

3.2 Receiving

Check pumping unit for shortage and damage immediately upon arrival. Pump accessories when required are packaged in a separate container and shipped with the unit. If equipment is damaged in transit, promptly report this to the carrier's agent. Make complete notations on the freight bill to speed satisfactory adjustment by the carrier. Unload and handle the unit with a sling.

Warning

Do not lift pump assembly by motor eye bolts alone. Motor eye bolts are not designed to support weight of entire pump assembly.

3.3 Temporary storage

If pump is not to be installed and operated soon after arrival, store it in a clean, dry area of moderate ambient temperature. Rotate the shaft by hand monthly to coat bearings with lubricant to retard oxidation and corrosion. Follow motor manufacturer's storage recommendations where applicable.

3.4 Location

Locate the pump as close to the suction supply as possible. Use the shortest and most direct suction piping practical. Refer to section *3.10 Suction (inlet) piping*. Locate the pump below system level wherever possible. This will facilitate priming, assure a steady liquid flow, and provide a positive suction head. Make sure sufficient NPSH (Net Positive Suction Head) is provided at the suction end by considering the pump's location in relation to the entire system. Available NPSH must always equal or exceed required NPSH specified on the pump performance curve. Always allow sufficient accessibility for maintenance and inspection. Provide a clear space with ample head room for use of a hoist strong enough to lift the pump/motor assembly. Make sure a suitable power source is available for the pump motor. Electrical characteristics should match those specified on the motor data plate, within the limits covered in sections *4. Installation - electrical* and *5. Operation*. Avoid pump exposure to sub-zero temperatures to prevent pump liquid from freezing. If freezing conditions exist during shutdown periods, see sections *5.7 Short duration shutdown* and *5.8 Extended period shutdown* for specific recommendations.

3.5 Mounting of pump

PACO In-line centrifugal pumps may be mounted on the equipment room floor, or suspended in the piping, depending on the size and configuration of the pump. The following instructions shall apply:

3.6 Floor mounted pumps (VL, VLS)

Pumps mounted on equipment room floors should be permanently installed on a firm, concrete foundation, mounting pad or spring isolation base of sufficient size to dampen any vibration and prevent any deflection. Suitable anchor bolts shall be used to secure the pump assembly to the pad or floor.

3.7 Suspended pumps (VL, VLS)

PACO In-line Centrifugal pumps, when properly supported, may be suspended in system piping. Pipe supports must be used on piping immediately adjacent to the pump. Pipe supports must be adequately sized to support the weight of pump and piping, full of liquid, and shall be designed to eliminate transmission of noise or vibration. PACO In line pumps are designed to be mounted in horizontal pipe runs with motor positioned vertically upward.

3.8 Suspended pumps (VL only)

Pumps with motor frame sizes of 256JM/JP or smaller may be mounted in vertical pipe runs (risers) or in horizontal pipe runs with motors mounted horizontally. Consult PACO Factory for suitability of mounting with larger motors. In no case shall motors be mounted vertically downward (upside down, with motor positioned below the pump).

3.9 Piping - general

Caution

Do not use pump as a support for piping! Use pipe hangers or other supports at proper intervals to provide complete piping support near the pump.

Both suction and discharge piping should be independently supported and properly aligned so that no strain is transmitted to the pump when flange bolts are tightened. Make sure piping is as straight as possible, avoiding unnecessary bends and fittings. Where necessary, use 45 ° or long-sweep 90 ° pipe fittings to decrease friction loss. Where flanged joints are used, make sure that inside diameters properly match and mounting holes are aligned. Do not spring or force piping when making any connections!

3.10 Suction (inlet) piping

The sizing and installation of suction piping is particularly important. It must be selected and installed in a manner that minimizes pressure loss and permits sufficient liquid flow into the pump during starting and operation. Many NPSH problems can be traced directly to improper design of suction piping systems. Observe the following precautions when installing suction piping: Suction piping should be as direct as possible, and ideally the length should be at least ten times the pipe diameter.
Short suction piping can be the same diameter as the suction opening. Longer piping should be one or two sizes larger (depending on length), reducing to the diameter of the pump suction opening. Use an eccentric reducer, with the eccentric side down (fig. 2) when reducing the pipe diameter to the diameter of suction opening.

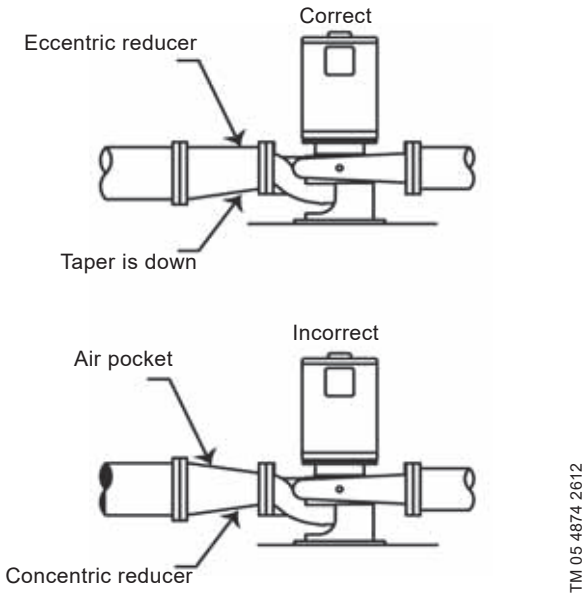

Fig. 2 Eccentric reducer usage

At no point should suction piping be smaller in diameter than the pump suction opening. Avoid any high points, such as pipe loops (fig. 3), that may create air pockets and throttle the system or produce erratic pumping.

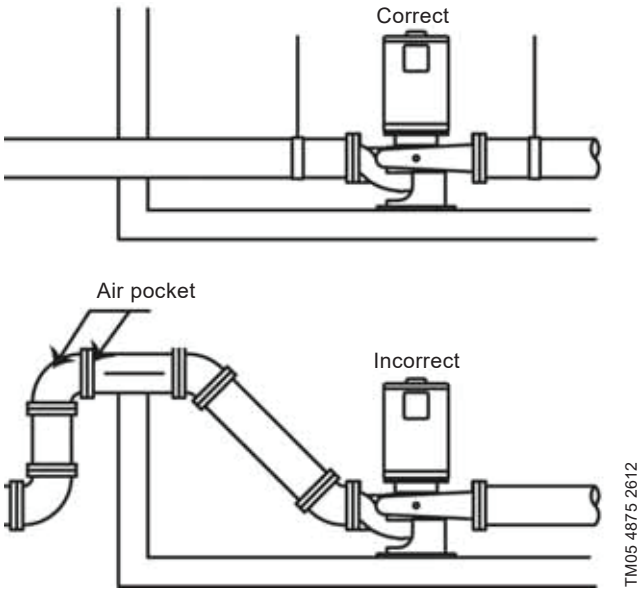

Fig. 3 Eccentric reducer usage

Install a valve in the suction line to isolate the pump during shutdown and maintenance, and facilitate pump removal. Where two or more pumps are connected to the same suction line, install a valve for each pump to isolate pump from the line. Valves should always be installed in positions that avoid air pockets. Globe valves should not be used, particularly when NPSH is critical. During pumping operation, valves on suction line must always be at FULL OPEN. Properly sized pressure gauges can be installed in gauge taps on pump suction and discharge nozzles. Gauges enable the operator to monitor pump performance and determine that the pump conforms to the parameters of the performance curve. If cavitation, vapor binding, or other unstable operation occurs, pressure gauges will indicate wide fluctuation in suction and discharge pressures. Gauge cocks are recommended for use with pressure gauges, to protect gauges from constant wear and vibration when not in use.

3.11 Discharge (outlet) piping

Short discharge piping can be the same diameter as the pump discharge opening. Longer piping should be one or two sizes larger depending on length. An even gradient is best for long horizontal runs of discharge piping. Install a valve near the discharge opening to prime and start the pump. The discharge gate valve is also used to isolate the pump during shutdown, maintenance, and facilitate pump removal. Any high points in discharge piping may entrap air or gas and thus retard pump operation.

3.12 Shaft sealing - general comments

PACO Type VL and VLS pumps are equipped with mechanical shaft seals.

3.13 Mechanical seals

PACO mechanical seals are matched to conditions for which the pump was sold. Unlike packing, mechanical seals require no field adjustments. Observe the following precautions to avoid seal damage and obtain maximum seal life: Do not exceed temperature or pressure limitations for the mechanical seal used.

Caution ***Do not run the pump dry or against a closed valve! Dry operation will cause seal failure within minutes.***

Clean and purge suction piping in new installations before installing and operating pump. Pipe scale, welding slag and other abrasives can cause rapid seal failure.

4. Installation - electrical



Warning

Use only qualified electricians for electrical installation and maintenance.

Refer to manuals provided with electrical accessory components and disconnect power supply as recommended for servicing.



Warning

Never do maintenance work when the unit is connected to power.

4.1 Motor, general

The motor control circuit must have the following components in order to comply with the National Electrical Code Motor Disconnecting Device: A motor disconnecting device must be:

- installed that it is capable of disconnecting both the controller (motor starter) and the motor from their source of power.
- The disconnecting device must be located so that the controller (motor starter) can be seen from the disconnecting means.
- In all cases, the distance from the disconnecting device to the controller must be less than 50'.

In most installations the disconnecting device will be a circuit breaker or fusible disconnect switch. Motor short circuit and ground fault protection: Short circuit and ground fault protection are usually provided by means of a circuit breaker or fusible disconnect switch. The selection of the size of the circuit breaker or fuse must be in accordance with Section 430-52 and Table 430-152 of the National Electrical Code. Motor controller with running over-current protection (magnetic starter) must be installed in accordance with applicable local and state electrical codes in addition to the National Electrical Code. Make sure the motor is properly mounted for easy access to conduit connections, grease fittings and drains. Motor may be rotated upon the bracket of volute casing to achieve a satisfactory position. Starting and overload control devices should match electrical characteristics of motor. For safety and convenience these devices may require installation some distance from the pump. Always follow control manufacturer's instructions for proper installation and connection. Grease lubricated motors are fully lubricated at time of manufacture and do not require further lubrication if prompt installation follows. If motor has been in local storage for six months or longer, refer to section *6.1 Motor lubrication* and lubricate before starting.

4.2 Installation wiring



Motor wiring to be performed by trained, qualified electricians only. Proper electrical lock-out procedures must be used whenever working on equipment.

Mount the control panel or motor starter(s) in close proximity to the pump to provide convenient control and ease of installation. Wire panel or starter(s) to motor(s) and pilot device(s): Wires to each motor must be sized for at least 125 % of the motor nameplate full load amps. AWG #16 Type THW stranded wire is recommended for wiring of pilot devices (float switches). Check incoming power source to ensure that it is the same as the voltage and phase of the motors. Verify that the starters are suitable to operate the pump motors on voltage and phase that is available.

5. Operation

5.1 Priming

The PACO in-line centrifugal pumps are not self priming, and must be completely primed (filled with liquid) before starting. If the pump will operate with a positive suction head, prime by opening the suction valve and allowing liquid to enter pump casing. Open all air vents a the high points of pump and piping to ensure air is forced from pump by liquid. Disconnect the recirculation line at the seal housing and bleed completely of all air. Re-connect the line prior to start-up. Rotate the shaft by hand to free entrapped air from impeller passageways. If pump has a suction lift, priming must be accomplished by other methods. The use of foot valves or ejectors, or manual filling of the pump casing and suction line with liquid are possible methods suggested for this purpose.

Caution ***Never run the pump dry in the hope that it will prime itself! Serious damage to the mechanical seal will result.***

5.2 Pre-start checklist

Make the following inspections before starting your PACO in-line centrifugal pump: Make sure all wiring connections to the motor (and starting device) match the wiring diagram and produce clockwise rotation as viewed from the end of the motor. If the motor has been in storage for an extended length of time, either before or after installation, refer to motor instructions before starting. Check voltage, phase, and line circuit frequency with the motor data plate. Turn rotating element by hand to make sure it rotates freely. Tighten plugs in gauge and drain taps. If pump is fitted with pressure gauges, keep gauge cocks closed when not in use. Check suction and discharge piping for leaks, and make sure all flange bolts are securely tightened.

5.3 Motor rotation

Caution ***Verify driver rotation prior to startup and operation. Failure to do so can result in serious damage to pump and driver if rotation is wrong.***

After the unit has been wired and checked to insure that all components in the system (disconnect device, magnetic starters, pilot devices and motors) are properly connected, check motor rotation as follows: For 3 phase units only-momentarily energize the motors to ensure that the rotation is correct as indicated by the arrow cast into the pump volute. If rotation is incorrect, interchange two wires at the motor starter terminals T1 and T2.

Caution ***The pumps must not be operated while dry. Energize motors only momentarily to determine proper rotation.***

5.4 Starting the pump

1. Install coupling guard on split coupled units.
2. Fully open gate valve (if any) in suction line, and close gate valve in discharge line.
3. Fill suction line with liquid and completely prime pump.
4. Start the motor (pump).
5. Immediately make a visual check of pump and suction piping for pressure leaks.
6. Immediately after pump reaches full operating speed, slowly open the discharge gate valve until complete system flow is achieved.
7. Check discharge piping for pressure leaks.
8. If pump is fitted with pressure gauges, open gauge cocks and record pressure reading for future reference. Verify that the pump is performing in accordance with parameters specified on performance curve.
9. Check and record voltage, amperage per phase, and kilowatts, if a wattmeter is available.

5.5 Voltage regulation

The motor will operate satisfactorily under the following conditions for voltage and frequency variation, but not necessarily in accordance with the standards established for operation under rated conditions: The voltage variation may not exceed 10 % above or below rating specified on the motor data plate.
The frequency variation may not exceed 5 % above or below motor rating. The sum of the voltage and frequency variations may not exceed 10 % above or below motor rating, provided the frequency variation does not exceed 5 %.

5.6 Pump shutdown

The following shutdown procedures will apply in most normal shutdowns for the PACO in-line pump. If pump will be inoperative for an extended length of time, follow storage procedures in Section IC. Always close the discharge gate valve before stopping pump. Close valve slowly to prevent hydraulic shock. Cut power to motor.

5.7 Short duration shutdown

For overnight or temporary shutdown periods under nonfreezing conditions, the pump may remain filled with liquid. Make sure the pump is fully primed before restarting. For short or frequent shutdown periods under freezing conditions, keep fluid moving within pump casing and insulate or heat pump exterior to prevent freezing.

5.8 Extended period shutdown

For long shutdown periods, or to isolate the pump for maintenance, lock-out power to pump and close suction gate valve. If no suction valve is used and the pump has positive suction head, drain all liquid from suction line to terminate liquid flow into pump suction nozzle. Remove plugs in pump drain and vent taps, as required, and drain all liquid from the pump volute casing. If freezing conditions will exist during long shutdown periods, completely drain the pump and blow out all liquid passages and pockets with compressed air. Freezing of pump liquid can also be prevented by filling the pump with antifreeze solution.

6. Maintenance

Warning



Do not attempt any maintenance, inspection, repair or cleaning in the vicinity of rotating equipment. Before attempting any inspection or repair on the pump, the driver controls must be in the "OFF" position, locked and tagged to prevent injury to personnel performing service on the pump. Inspection, maintenance and repair should be performed by trained, qualified personnel only.

6.1 Motor lubrication

To lubricate the motor while running or at rest, remove grease drain plug (if any) and filler plug on grease fitting. Grease with clean lubricant until grease appears at drain hole or along motor shaft. One-half to one cubic inch of grease is sufficient for motors 5 hp and under, with proportionately more grease for greater hp motors.

Recommended lubrication periods

Motor rpm	Motor hp	Operating conditions		
		Standard	**Severe**	**Extreme**
1750 and below	10-40	1 yr	3 mo	6 mo
	50-150	1-3 yrs	6 mo - 1 yr	6 mo - 1 yr
	200 and Up	1 yr	3 mo	6 mo
Above 1750	All hp	1 yr	3 mo	6 mo
		1 yr	3 mo	3 mo

6.1.1 Standard conditions

Eight hours per day operation, normal or light loading, clean air, 100 °F, maximum ambient temperature.

6.1.2 Severe conditions:

Continuous 24-hour operation, shock loading or vibration, poor ventilation, 100-150 °F, ambient temperature.

6.1.3 Extreme conditions

The following are considered Extreme conditions: Continuous operation, heavy shock or vibration, dirt or dust in air, extreme ambient temperature.

To lubricate motor while running or at rest, remove grease drain plug (if any) and filler plug on grease fitting. Grease with clean lubricant until grease appears at drain hole or along motor shaft.

One-half to one cubic inch of grease is sufficient for motors 5 hp and under, with proportionately more grease for greater hp motors. Most fractional and some integral frame motors have "sealed-for-life" bearings, and do not require further lubrication throughout motor life. Always follow motor manufacturer's lubrication instructions, and periodically check grease fittings and drain plugs for leaks. If lubricating instructions do not accompany motor, refer to the following table for recommended lubrication periods.

Recommended bearing Grease for pumps

Manufacturer	Lubricant
Shell	Dolium
Exxon	Polyrex
Chevron	SRI Grease NLGI 22
	Black Pearl NLGI 2
Phillips	Polytrac
Texaco	Polystar RB

This table lists recommended types of grease for both pump and motor lubrication. These types have all been thoroughly tested and should be used whenever possible.

Caution ***Do not lubricate with lithium based grease. Equipment damage will result.***

7. Disassembly

7.1 Preparation for disassembly



Warning

Turn off power, lock-out electrical breaker and provide appropriate "Do Not Operate" or equivalent signage prior to any work on equipment. Verify all power is off at pump using appropriate electrical instrumentation.
Work should be performed only by qualified and trained personnel.

Complete disassembly instructions are outlined below. Proceed only as far as required to perform the maintenance work needed. Close valves on suction and discharge side of pumps and drain pump, taking precautions as necessary based on fluid being pumped. Flush, if necessary. Allow adequate working area around pump for maintenance or disassembly.

7.2 Seal replacement (VL)

1. Complete preparations noted in section *7.1 Preparation for disassembly*, above.
2. Unscrew tubing connector from pipe tee of Air Vent assembly (15A) if equipped.
3. Remove Casing Bolts (8B).
4. Back-pull rotating assembly away from Volute (1A). Make sure external wiring will not be torn from motor leads before pulling.
5. Remove Volute Gasket (11A) from outer face of back plate/ bracket, and discard. New sealing gaskets should always be used whenever pump is reassembled.
6. For replacement of Wear Ring (4A), refer to section *7.5 Wear ring replacement* at this time.
7. For replacement of Seal, Sleeve or for general disassembly, continue with the following instructions
8. Impeller removal procedures vary depending on motor type. Follow appropriate instructions as follows:

Impeller removal- fractional horsepower motors

Impeller (3A) is threaded on to fractional horsepower (56J) motor shaft. Loctite is applied to impeller threads during factory assembly. If adhesive shear strength is too great for disassembly with ordinary hand tools parts must be heated by torch and disassembled while hot. Apply torch heat to impeller eye when unscrewing threaded impellers, axially along shaft sleeve exterior to loosen for removal. Holding power of Loctite decreases as temperature rises, and compound completely decomposes at temperatures above 650 °F. Impeller must be unscrewed, while preventing motor shaft rotation by utilizing a large screwdriver securely in slot at back end of motor shaft while unscrewing impeller.

Caution ***Do not insert screwdriver between impeller vanes to prevent rotation. Use strap wrench around the impeller or shaft to prevent rotation.***

Impeller Removal- Integral Horsepower Motors:

Impeller (3A) is keyed onto integral horsepower (JM & JP) motor shaft. Slide impeller axially off of shaft. If impeller can not be removed by hand, additional leverage may be necessary. Using a gear puller or two pry bars, position the tongs in close proximity to impeller vanes and carefully apply smooth, even force to the impeller. Excessive force will distort and damage the impeller.

1. Remove and discard spring and retainer from seal assembly (14A).
2. Remove seal head assembly manually from Shaft Sleeve (5A). Water-soluble lubricant may be applied to shaft to ease removal of Shaft Seal (14A). Pull seal head assembly manually from shaft, using slight twisting motion (as necessary) to loosen bellows from shaft sleeve.
3. Remove and discard seal seat from Bracket (21A). Thoroughly clean the inside cavity of bracket or cap.
4. For replacement of Shaft Sleeve (5A), refer to section *7.4 Sleeve Replacement (VL)* at this time.
5. Interior surface of bellows on new seal head is coated with bonding agent that adheres to motor shaft. When old seal head is removed, bonding agent no longer exists and bellows may crack or split during removal. Installation of new mechanical seal is always recommended if it becomes necessary to remove existing seal from shaft.
6. Clean and lubricate shaft sleeve (shaft on 56J motors) with water-soluble lubricant and make sure no sharp edges exist which could cut bellows of new seal.
7. Press new seal seat firmly into bracket or cap. Avoid direct contact of seal face with metallic or abrasive objects and wipe clean after installation to ensure abrasive-free sealing surface.
8. Slide new seal head assembly onto shaft by applying even pressure to base of assembly. Make sure sealing faces fit snugly.
9. See Reassembly instructions, section *7.6 Reassembly of pumps*.

7.3 Seal replacement (VLS)

1. Complete preparations noted.
2. Remove coupling guard (34F).
3. Remove coupling bolts (8E). Pry apart the coupling halves (23D), remove keys (12B) and set aside.

Note ***Mark or measure the original position of the pump coupling on the motor side.***

4. Unscrew tubing connector from pipe tee of air vent assembly. Pipe dope is applied to threads during factory assembly, and resulting bond may retard but will not prevent manual disassembly.
5. Remove seal cap bolts and slide seal cap (2N) up shaft to remove.
6. Remove seal head assembly manually from shaft (6A). Water-soluble lubricant may be applied to shaft to ease removal of shaft seal (14A). Pull seal head assembly manually from shaft, using slight twisting motion (as necessary) to loosen bellows from shaft.

7. Remove and discard seal spring and retainer.
8. remove and discard seal seat from seal cap (2N) and thoroughly clean the inside cavity of seal cap.
9. Interior surface of bellows on new seal head is coated with bonding agent that adheres to motor shaft. When old seal head is removed, bonding agent no longer exists and bellows may crack or split during removal. Installation of new mechanical seal is always recommended if it becomes necessary to remove existing seal from shaft.
10. Clean and lubricate shaft (6A) with water-soluble lubricant and make sure no sharp edges exist to cut or scratch bellows of new seal.
11. Press new seal seat firmly into seal cap. Avoid direct contact of seal face with metallic or abrasive objects and wipe clean after installation to ensure abrasive free sealing surface.
12. Slide new seal head assembly onto shaft by applying even pressure to base of assembly.
13. Install seal cap (2N) down shaft.
14. See reassembly instructions.

7.4 Sleeve Replacement (VL)

1. Remove impeller key (12A) from shaft (integral horsepower motors only)
2. Sleeves are bonded to shaft using Loctite. Loctite adhesive compound is a liquid resin that produces a tough bond when applied to threaded and close-fitting connections during assembly. It is used by PACO on shaft sleeves to secure sleeve to shaft.
3. Apply light torch heat axially along shaft sleeve exterior to break the Loctite bond and loosen sleeve for removal. Excessive heating is not necessary, and should be avoided to protect bearings. Remove sleeve.
4. Wipe or brush clean all adhesive surfaces before reapplying Loctite. Use LocQuic Primer or equivalent for preparation of surface. LocQuic Primer is a degreasing agent recommended for use in preparing mating surfaces for Loctite application. Do not use gasoline or other petroleum products for cleaning, because an oily surface will remain. Assemble shaft sleeves with twisting motion to ensure an even hold, and always make sure sleeve is firmly in place against shaft shoulder. Allow a few minutes for Loctite to bond prior to completing assembly.

7.5 Wear ring replacement

1. Complete preparations
2. Back-pull rotating assembly,
3. It may be necessary to remove volute (1A) from piping, to facilitate easy access to interior of volute. If necessary, remove flange bolts at piping.
4. To remove worn Case Wear Ring (4A), drill two holes slightly smaller than width of ring into exposed edge of ring. Once holes are drilled, a chisel may be used to completely sever ring at holes and break ring into two halves for easy removal.
5. Clean the ring cavity in the volute prior to installing wear ring to ensure a properly aligned fit.
6. To reassemble, press fit new wear ring squarely into volute casing cavity. Ring may be tapped into place to make sure it is completely impressed into cavity.

Caution ***Do not use metal tooling against wear ring surfaces. Use only rubber, rawhide, wood or other soft material to prevent damage to ring.***

7.6 Reassembly of pumps

1. Clean all parts prior to reassembly, ensuring all contacting surfaces and threads are free of debris. Reassemble pump by following the above instructions in reverse. Inspect and ensure the following:

- All mechanical seal components and shaft sleeve must be in good condition or leakage may result.
- Replacement of complete seal assembly is recommended.
- Appropriate Loctite is used in re-assembly of shaft sleeves.
- Appropriate Loctite is used in re-assembly of threaded impellers.

2. Re-install coupling guards on coupled pumps.



Warning

Type VLS pump is a split coupled pump. Coupling guard must be reinstalled and in place prior to operation.

8. Ordering parts

PACO's commitment to state-of-the-art pump design and quality manufacturing assures maximum user benefits with optimum equipment life at lower cost. PACO's commitment to their customers continues through an extensive service organization. Highly trained technicians can assist customers with initial startup, troubleshooting, repair, and system analysis.
PACO maintains an extensive stock of replacement parts and parts kits for our most popular model pumps. Shipment of these parts is normally made within three days after receipt of an order. On larger pumps, where it is impractical for our factory to inventory low usage parts, replacement parts are normally manufactured and shipped within 15 working days of receipt of an order. In order to reduce pump repair time and shorten inconvenient pump service interruptions, it is suggested that the pump user stock spare parts. For suggested spare parts see Replacement Parts Guide A3b.2, and contact your local PACO Sales Representative (see back cover for the number of your nearest PACO sales office). Since spare parts requirements and quantities vary for specific pump constructions, allow your PACO Representative to help in defining your spare part requirements. To ensure that the proper replacement parts are ordered for your particular pump model, when you call: Identify all pertinent data from the pump name plate (see Pump Identification). This should always include the pump Catalog or Model Number, and the pump Serial Number. For replacement impellers, also include from the nameplate the operating conditions (GPM and TDH) and the impeller diameter. Identify all parts by item number and description as indicated by the appropriate assembly drawing in this manual, for your particular pump model.

9. Exploded views

9.1 Type VL, 56J fractional hp motor (less than 1 hp)

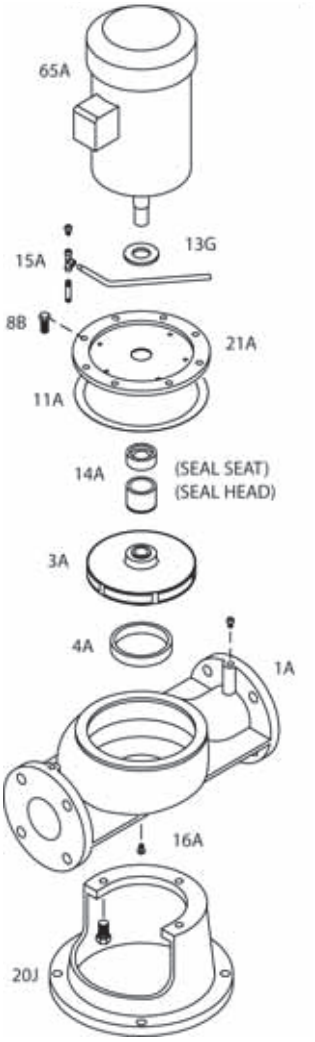

TM05 4877 2612

Pos.	Description
1A	Volute
3A*	Impeller
4A*	Case wear ring
8B	Volute capscrew
11A*	Volute gasket
13G	Slinger
14A*	Seal assembly
15A	Recirc tubing
16A	Pipe plug
20J	Cast iron stand
21A	Motor bracket
65A	Motor, 56J frame

* Recommended spare parts

9.2 Type VL-JM, integral hp motor (1 hp or greater)

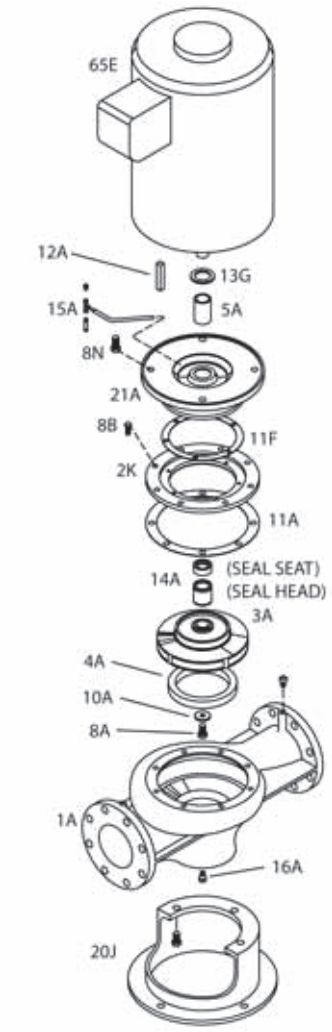

TM05 4878 2612

Pos.	Description
1A	Volute
2K	Back plate
3A*	Impeller
4A*	Case wear ring
5A*	Shaft sleeve
8A*	Impeller screw
8B	Volute screw
8N	Motor screw
10A*	Impeller washer
11A*	Volute gasket
11F*	Bracket gasket
12A*	Impeller key
13G	Slinger
14A*	Seal assembly
15A	Recirc tubing
16A	Pipe plug
20J	Cast iron stand
21A	Motor bracket
65E	Motor, JM frame

* Recommended spare parts

9.3 Type VL-JP, motor (packed pumps)

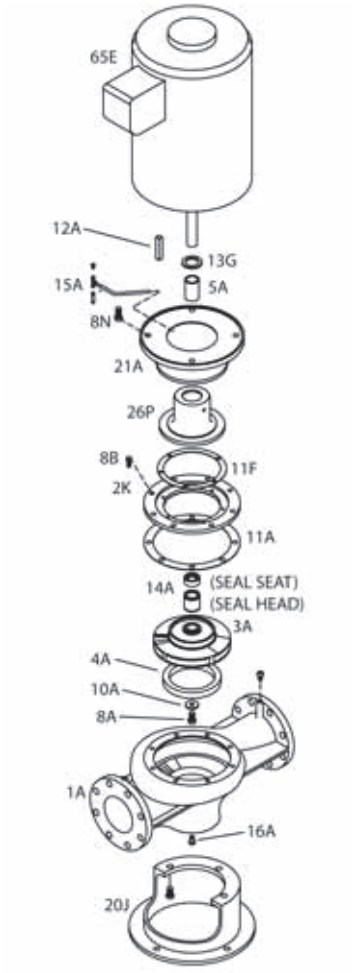

TM05 4879 0213

Pos.	Description
1A	Volute
2K	Back plate
3A*	Impeller
4A*	Case wear ring
5A*	Shaft sleeve
8A*	Impeller screw
8B	Volute screw
8N	Motor screw
10A*	Impeller washer
11A*	Volute gasket
11F*	Bracket gasket
12A*	Impeller key
13G	Slinger
14A*	Seal assembly
15A	Recirc tubing
16A	Pipe plug
20J	Cast iron stand
21A	Motor bracket
26P	Seal cap
65E	Motor, JM frame

* Recommended spare parts

9.4 Type VLS, cross section and parts list

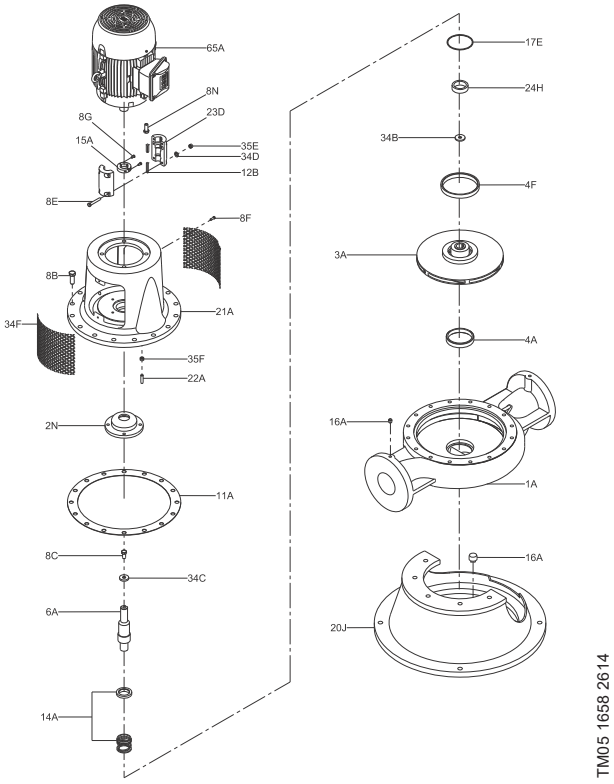

TM05 1658 2614

Pos.	Description
1A	Volute
2N	Seal cap
3A*	Impeller
4A*	Case wear ring
4F	Balance ring
6A	Pump shaft
8B	Volute screw
8C	Pump shaft screw
8E	Coupling screw
8F	Coupling guard screw
8G	Locating ring screw
8N	Motor screw
11A*	Volute gasket
12B	Coupling key
14A*	Seal assembly
15A	Locating ring
16A	Pipe plug
17E	Seal cap o-ring
20J	Cast iron stand
21A	Motor bracket
22A	Seal cap studs
23D	Coupling halves
24H	Bushing
34B*	Impeller washer
34C	Pump shaft washer
34D	Coupling Washer
34F	Coupling guard
35E	Coupling Nut
35F	Seal cap nut
65A	Motor

* Recommended spare parts

10. Troubleshooting

10.1 Cause codes

Symptoms	Cause code
Pump does not deliver any liquid at start-up	1*2*3*4*5*6*7*8*9*10*11*14*16*17*22*23*24*34
Pump stops delivering liquid after start-up	2*3*4*5*6*7*8*9*10*11*12*13*22*23*24*34
Pump overheats and/or ceases to deliver liquid	1*3*9*10*11*21*22*27*29*30*31*33*34*40*41
Insufficient flow rate	2*3*4*5*6*7*8*9*10*11*14*16*17*20*21*22*23*24*25*26*34
Excessive flow rate	15*18*20*34
Discharge pressure is too high	4*14*16*18*20*22*23*24*25*26*34
Shaft seal leaks appreciably, or the packing leaks excessively	27*28*29*30*33*34*35*36*39
Shaft seal or packing fails prematurely	12*13*27*28*29*30*33*34*35*36*37*38*39
Pump uses too much power	15*16*18*19*20*23*25*27*28*31*33*34*35*37*38
Pump runs rough and noisily	2*3*4*5*6*7*8*9*10*11*15*17*18*21*23*24*27*28*29*30*31*32*33*34*40

10.2 Possible causes

1. The pump has not been properly bled of air.
2. The pump suction line has not been completely primed.
3. The suction head (NPSHR) required by the pump is too high, or the net positive suction head available (NPSHA) at your facility is too low.
4. The fluid pumped contains too much entrained air or gas.
5. There are air pockets in the suction line.
6. An entry of air has suddenly occurred in the suction line.
7. An entry of air past the shaft seal into the pump has occurred.
8. The inlet of the suction line is insufficiently submerged.
9. The suction valve is closed or only partially open.
10. The suction strainer is clogged with dirt or debris.
11. The foot valve is clogged or undersized.
12. Little or no cooling fluid supplied to the shaft seals.
13. The lantern ring is not positioned opposite the flushing inlet thereby restricting fluid flow.
14. Pump drive rotational speed too low.
15. Pump drive rotational speed too high.
16. Pump rotation wrong or impeller installed backwards.
17. Total head of installation (back pressure) higher than rated total head of the pump.
18. Total head of installation (back pressure) lower than rated total head of the pump.
19. Density of fluid pumped differs from that specified when the pump was purchased.
20. Viscosity of fluid pumped differs from that specified when the pump was purchased.
21. The pump is operating at too low a rate of flow. The discharge valve may be throttled too much.
22. If pumps are operating in parallel, the pump characteristics may not be suitable for parallel operation.
23. The impeller may be clogged with debris.
24. The impeller may be damaged.
25. The casing and impeller wear rings may be excessively worn.
26. There may be internal leakage from the discharge to the suction compartments as the result of internal gasket failure.
27. There may be a misalignment of the pump shaft.
28. The shaft may chatter because it is bent.
29. The pump may run rough due to improper balancing of the impeller.
30. The shaft may not be running due to worn bearings.
31. The impeller may be rubbing against the inside of the case.
32. The concrete pad might not be of sufficient size to provide pump stability.
33. The pump may have become misaligned during installation.
34. The operating conditions of the installation do not agree with the data specified when the pump was purchased.
35. The shaft seal may be incorrectly installed, or the stuffing box has not been packed correctly.
36. The shaft sleeve may be scored or pitted in the region of the packing due to dirt or abrasive matter in the flushing fluid.
37. Excessive tightening of the packing gland may block the flushing port thereby diminishing the sealing fluid flow.
38. Packing material may have become wedged or extruded between the shaft and the bottom of the stuffing housing due to excessive clearance on the packing backup washer.
39. The mechanical seal may have been damaged by running dry.
40. There may be excessive axial thrust (side loading) due to improper impeller central alignment.

Grundfos CBS Inc.
902 Koomey Road
Brookshire, TX 77423 USA
Phone: 281-994-2700
Toll Free: 1-800-955-5847
Fax: 1-800-945-4777

www.grundfosexpresssuite.com

© Copyright Grundfos Holding A/S

The name Grundfos, the Grundfos logo, and **be think innovate** are registered trademarks owned by Grundfos Holding A/S or Grundfos A/S, Denmark. All rights reserved worldwide.

98434722 0714
ECM: 1139103

INLINE CENTRIFUGAL PUMPS REPLACEMENT PARTS GUIDE

VL, VLC, VLS, VLSC

This guide is valid for all PACO brand products beginning with product codes 16, 17 and Grundfos prodcut codes 26 and 27 only.
See back cover for explanation and identification.

In-Line Pumps are designed and built to provide maximum life while requiring minimum attention and service, replacement parts may at times be required. **Virtually All Required Parts are Available In Kit Form.**
These kits (easily selected from the charts on the following pages) have been designed to ensure that any parts needed when replacing any Inline Pump component are furnished when you need them, with minimal effort.

GUIDELINES AND SUGGESTIONS:
The pump nameplate and motor frame size supplies all data required in the selection and ordering of the proper replacement parts kit. The **PUMP MODEL AND SERIAL NUMBER** should be referenced whenever any replacement parts kit is ordered, while the **pump conditions** (GPM/TDH) and **impeller trim** are required data for the ordering of replacement impellers.

TO REPLACE A MECHANICAL SEAL
Select the correct Seal Kit, which contains the volute and backplate gaskets as appropriate. Shaft sleeve on type VL/VLC and shaft (type VLS/VLSC) inspection is suggested, and replacement made as indicated.

TO REPLACE SHAFT SLEEVES (Type VL and VLC)
You will need a shaft sleeve Kit. A Seal or Packing Kit will provide other normally needed parts.

TO REPLACE IMPELLER
An Impeller Kit is required; a Wear Ring Kit is highly recommended, and a Seal or Packing Kit will provide all other normally replaced components.

TO REPLACE WEAR RINGS
A Wear Ring Kit is required. A Seal/Packing Kit will provide all other normally replaced components. Shaft Sleeve inspection is suggested.

TO REPLACE GASKETS
Order appropriate individual Gaskets, as needed.

TO REPLACE LOST/DAMAGED HARDWARE
Hardware Kits are available, for 175 PSI units. (For 250 PSI refer to factory).

TO OVERHAUL THE PUMP
You will need an Impeller Kit, a Wear Ring Kit, Sleeve or Shaft Kit, and a Seal kit.

PLACING AN ORDER
After determining and selecting the required Kit(s), or for selection assistance, contact your local Grundfos sales office, representative, or distributor.

PUMP MODEL NO.	PUMP CONST. CODE	IMPELLER KIT (1)			WEAR RING KIT	HARDWARE KIT	SLEEVE	SEAL KIT
		BRONZE	N.A. Bronze	IRON				
1270-5 (2)	X0XXXX	91911003		91911004	91910538	91910592		
1270-5 (2)	X3XXXX	91911005		96647857	91910538	91910593		
1270-7	X0XXXX	91911003		91911004	91910538	91910592		
1270-7	X3XXXX	91911005		96647857	91910538	91910593		
1570-5	X0XXXX	91909723		97686155	91910539	91910592		
1570-5	X3XXXX	91909724		91909725	91910539	91910593		
1570-7 (3)	X0XXXX	91910999		91915361	91910539	91910592		
1570-7 (3)	X3XXXX	91911000		91911001	91910539	91910593		
1570-9	X0XXXX	91910999		91915361	91910539	91910592		
1570-9	X3XXXX	91911000		91911001	91910539	91910593		
2070-1	X0XXXX	91909734		-	91910540	91910592		
2070-1	X3XXXX	91909735		91909736	91910540	91910593		
2070-5	X0XXXX	91909737		91909738	91910540	91910592		
2070-5	X3XXXX	91909739		91909740	91910540	91910593		
2570-5	X0XXXX	91909741		-	91910541	91910592		
2570-5	X3XXXX	91909742		91909743	91910541	91910593		
2570-7	X0XXXX	91909748		-	91910541	91910592		
2570-7	X3XXXX	91909749		91909750	91910541	91910593		
2570-7	X4XXXX	91909754		91909755	91910541	91910594		
2570-9	X0XXXX	91911589		91911590	91910541	91910592		
2570-9	X3XXXX	91911595		91911596	91910541	91910593		
2570-9	X4XXXX	91911601		91911602	91910541	91910594		
3070-5	X3XXXX	91909758		91909759	91910542	91910593		
3070-5	X4XXXX	91909760		91909761	91910542	91910594		
3070-7	X3XXXX	91909762		91909763	91910542	91910593		
3070-7	X4XXXX	91909765		91909766	91910542	91910594		
4070-5	X3XXXX	91909768		91909769	91910543	91910593		
4070-5	X4XXXX	91909770		91909771	91910543	91910594		
4070-7	X3XXXX	91909772		91909773	91910544	91910593		
4070-7	X4XXXX	91909777		91909778	91910544	91910594		
5070-5	X3XXXX	91909779		91909780	91910546	91910593		
5070-5	X4XXXX	91909781		91909782	91910580	91910594		
5070-7	X3XXXX	91909783		91909784	91910548	91910593		
5070-7	X4XXXX	91909788		91909789	91910583	91910594		
2095-1	X3XXXX	91909791		91909792	91910540	91910595		
2095-5	X3XXXX	91909793		91909795	91910540	91910595		
2095-5	X4XXXX	91909796		91909797	91910540	91910596		
2095-7	X3XXXX	91909798		91909799	91910540	91910595		
2095-7	X4XXXX	91909800		-	91910540	91910596		
2095-9	X3XXXX	91911017		91911018	91910540	91910595		
2095-9	X4XXXX	91911019		91911020	91910540	91910596		
2595-1	X3XXXX	91909810		91909812	91910541	91910595		
2595-1	X4XXXX	91909813		91909814	91910541	91910596		
2595-3	X3XXXX	91909815		91909816	91910541	91910595		
2595-3	X4XXXX	91909819		91909820	91910541	91910596		
3095-1	X3XXXX	91909821		91909822	91910542	91910595		
3095-1	X4XXXX	91916836		-	91910542	91910596		
3095-3	X3XXXX	91909823		91909824	91910542	91910595		
3095-3	X4XXXX	91909825		91909826	91910542	91910596		
3095-5	X3XXXX	91909827		91909829	91910542	91910596		
3095-5	X4XXXX	91909830		97665079	91910542	91910596		
3095-7	X3XXXX	91911369		91911370	91910542	91910595		
3095-7	X4XXXX	91911371		91911372	91910542	91910596		
4095-3	X3XXXX	91909850		-	91910543	91910595		
4095-3	X4XXXX	91909852		-	91910543	91910596		
4095-5	X3XXXX	91909853		91909854	91910543	91910595		
4095-5	XAXXXX	91909855		91909856	91910567	91910596		
4095-7	X3XXXX	91911630	97642561	91911633	91910543	91910595		
4095-7	XAXXXX	91911637	96762426	91911638	91910567	91910596		
5095-5	X3XXXX	91909857		91909858	91910549	91910595		
5095-5	X4XXXX	91909859		91909860	91910549	91910596		
5095-B	XAXXXX	91909861		91909862	91910549	91910596		
5095-7	X3XXXX	91909863	97920032	91909865	91910549	91910595		
5095-7	X4XXXX	91909867	97684756	91909870	91910549	91910596		
5095-9	XAXXXX	91909872	97549902	91909873	91910549	91910596		
6095-5	X4XXXX	91909885		91909886	91910550	91910596		
6095-7	X4XXXX	91909187	98090499	91909188	91910551	91910596		
8095-1	XAXXXX	91909898		96769173	91910554	91910596		

See page 4 for sleeve selection

See page 5 for seal selection

See page 3 for key to footnotes indicated on this page

PUMP MODEL NO.	PUMP CONST. CODE	IMPELLER KIT (1)			WEAR RING KIT	HARDWARE KIT	SLEEVE	SEAL KIT
		BRONZE	Aluminum Bronze	IRON				
2512-1	**X3XXXX**	91909901		91909902	91910541	91910598	See page 4 for sleeve selection	See page 5 for seal selection
2512-1	**X4XXXX**	91909903		K1065-C	91910541	91910599		
2512-1	**XAXXXX**	91909904		91909905	91910541	91910599		
3012-1	**X4XXXX**	91909906		K1068-C	91910542	91910599		
3012-3	**X3XXXX**	91909908		K1069-C	91910542	91910598		
3012-3	**XAXXXX**	91909915		91909916	91910542	91910599		
4012-1	**X3XXXX**	K1067-B		K1067-C	91910555	91910598		
4012-1	**X4XXXX**	91909917		91909918	91910555	91910599		
4012-1	**XAXXXX**	91909919	97793607	97529187	91910555	91910599		
4012-5	**X4XXXX**	91909921		91909922	91910555	91910599		
4012-5	**XAXXXX**	91909923		91909924	91910555	91910599		
4012-7	**X4XXXX**	91911373		91909922	91910555	91910599		
4012-7	**XAXXXX**	91911375	97767356	91909924	91910555	91910599		
5012-5	**X4XXXX**	91909925		91909926	91910556	91910599		
5012-7	**XAXXXX**	91909928		91909931	91910556	91910599		
5012-9	**XAXXXX**	91911367	97692846	91911368	91910556	91910599		
5012A	**XAXXXX**	91909218	98382920	-	91910556	91910559		
6012-1	**X4XXXX**	91909932		K1078-C	91910557	91910599		
6012-3	**X4XXXX**	91909951		91909952	91910558	91910599		
6012-3	**XAXXXX**	91909957	97951786	91909958	91910558	91910599		
6012-5	**XAXXXX**	91909957	97951786	91909958	91910558	91910599		
8012-1	**X4XXXX**	91909959		K1082-C	91910561	91910599		
8012-1	**X5XXXX**	91909961		91909963	91910562	91910600		
8012-3	**X4XXXX**	91909963		K1084-C	91910561	91910599		
8012-3	**XAXXXX**	91909965	97767354	91909967	91910561	91910599		
8012-3	**X5XXXX**	91909969		91909970	91910562	91910600		
1012-3	**X5XXXX**	91910024		91910026	91910564	91910600		
40157	**XAXXXX**	91911029	98134905	91911030	91910555	91910601		
50157	**XAXXXX**	91910083	98366001	97563170	91910566	91910601		
50157	**X5XXXX**	91910093		-	91910556	91910601		
60157	**X5XXXX**	91910113	97749052	91910114	91910566	91910601		
80157	**X5XXXX**	91910130	97790399	-	91910568	91910569		

NOTES:

(1) Specify Impeller diameter when ordering.

(2) Model 1270-5 is obsolete. Verify trim diameter and conditions and refer to model 12707-7.

(3) Model 1570-7 is obsolete. Verify trim diameter and conditions and refer to model 15707-9.

GASKETS For Volute and Backplate.(For Type VLS/VLSC, seal cap gasket is indicated below.)

PUMP SIZE (NOMINAL MAX. IMPELLER DIA.)	CONSTRUCTION CODE	SEAL I.D.	GASKET P/N	GASKET DESCRIPTION
7"	**X0, X3, X4**	**5/8", 1-1/4", 1-3/4"**	91869180	Volute O-Ring
9-1/2"	**X3, X4, XA**	**1-1/4", 1-3/4"**	91849028 91869180	Volute Gasket Backplate O-Ring
9-1/2"	**X5**	**2-1/4"**	91849028	Volute Gasket
12"	**X3, X4**	**1-1/4", 1-3/4"**	91848843 91869180	Volute Gasket Backplate O-Ring
12"	**X5**	**2-1/4"**	91848843 91849000	Volute Gasket Backplate Gasket

VL, VLC SHAFT SLEEVES (See Page 1 prior to making selection)

Note: Installation of shaft sleeve requires tube of Locktite- PACO Part Number 91893784

MOTOR	CONSTR. CODE	MATERIAL	PART NUMBER
Fractional (56, 56J)	**X0**	**—**	Not Applicable
	X1	**—**	Not Applicable
Gyropoise (TG)	**X3**	**BRONZE**	91843687
		STAINLESS	91843690
	83	**BRONZE**	91843784
		STAINLESS	91843785
JM/CCP	**X3**	**BRONZE**	91843842
		STAINLESS	91843844
	83	**BRONZE**	91843861
		STAINLESS	91843862
	X4	**BRONZE**	91843803
		STAINLESS	91843804
	84	**BRONZE**	91843868
		STAINLESS	91843869
	XA	**BRONZE**	91843858
		STAINLESS	91843859
JP/CCP	**X3**	**BRONZE**	91843618
		STAINLESS	91843625
	83	**BRONZE**	91843850
		STAINLESS	96769942
	X4	**BRONZE**	91843632
		STAINLESS	91843636
	84	**BRONZE**	91843863
	XA	**BRONZE**	91843812
		STAINLESS	91843814
CCP	**X5**	**BRONZE**	91843739
		STAINLESS	91843740

PACO TYPE VLS (HP Motor Frames), SPLIT COUPLED INLINE REPLACEMENT PARTS

CONSTRUCTION CODE	MOTOR FRAME	O-RING	BUSHING	SHAFT KIT	COUPLING	COUPLING KEY KIT
X3	**143/145HP**	91869106	91844356	91909179	91871057	91909191
	182-215HP	91869106	91844356	91909179	91871058	91909192
X4	**213-286HP**	91869106	91844355	91909180	91871058	91909192
	324/326HP	91869106	91844355	91909182	91871059	91909194
XA	**213-286HP**	91869106	91844355	91909183	91871058	91909192
	324/326HP	91869106	91844355	91909185	91871059	91909194
X5	**324-405HP**	91869110	91844353	91909184	91871059	91909194
	444/445HP	91869110	91844353	91909181	91871061	91909193

TYPE VLS/VLSC, SPLIT COUPLED INLINE REPLACEMENT PARTS

VLS, VLSC MECHANICAL SEAL KITS

Select appropriate seal kit by matching desired seal code with pump model & construction code

	AVAILABLE SEAL MATERIALS & PROPERTIES				
Seal Code->	**1XXXXX**	**7XXXXX**	**6XXXXX**	**2XXXXX**	**8XXXXX**
Max Temp.	**211°F**	**211°F**	**250°F**	**275°F**	**211°F**
Max Press*.	**175 PSI**	**175 PSI**	**175 PSI**	**175 PSI**	**350 PSI**
Refer to Note #	**-**	**-**	**1**	**1**	**3, 6**
Type	**21**	**21**	**21**	**21**	**1B**
Elastomer	**Buna N**	**Buna N**	**Viton**	**Viton**	**Buna N**
Rot. Element	**Carbon**	**Carbon**	**Carbon**	**Carbon**	**Carbon**
Stationary Seat	**Ceramic**	**Ni Resist**	**Ni Resist**	**Tung Crbd**	**Ni Resist**
Spring	**18-8 S/S**	**18-8 S/S**	**18-8 S/S**	**18-8 S/S**	**18-8 S/S**
Hardware	**18-8 S/S**	**18-8 S/S**	**18-8 S/S**	**18-8 S/S**	**Brass**

CONSTRUCTION CODE	**MECHANICAL SEAL KIT PART NUMBER**				
X3	91909162	91909165	91909164	91909163	96869395
X4	91909166	91909170	91909169	91909167	96869886
XA	91909166	91909170	91909169	91909167	96869886
X5	91909171	91909174	91909173	91909172	96936795

GRUNDFOS

VL, VLC MECHANICAL SEAL KITS

Select appropriate seal kit by matching desired seal code with pump model & construction code.

	AVAILABLE SEAL MATERIALS & PROPERTIES					
Seal Code->	**1XXXXX**	**7XXXXX**	**6XXXXX**	**2XXXXX**	**3XXXXX**	**8XXXXX**
Max Temp.	**211°F**	**211°F**	**250°F**	**275°F**	**180°F**	**211°F**
Max Press*.	**175 PSI**	**175 PSI**	**175 PSI**	**175 PSI**	**175 PSI**	**350 PSI**
Refer to Note #	-	-	1	1	5	3, 6
Type	**21**	**21**	**21**	**21**	**Double**	**1B**
Elastomer	**Buna N**	**Buna N**	**Viton**	**Viton**	**Buna N**	**Buna N**
Rot. Element	**Carbon**	**Carbon**	**Carbon**	**Carbon**	**Carbon**	**Carbon**
Stationary Seat	**Ceramic**	**Ni Resist**	**Ni Resist**	**Tung Crbd**	**Ceramic**	**Ni Resist**
Spring	**18-8 S/S**	**18-8 S/S**	**18-8 S/S**	**18-8 S/S**	**18-8 S/S**	**18-8 S/S**
Hardware	**18-8 S/S**	**18-8 S/S**	**18-8 S/S**	**18-8 S/S**	**18-8 S/S**	**Brass**

PUMP MODEL	CONSTRUCTION CODE	MECHANICAL SEAL KIT PART NUMBER					
1270 1570 2070 2570	**X0**	91909744	91909747	91909746	91909745	K102-3	K102-8
1270 1570 2070 2570 3070 4070 5070	**X3**	91909832	91909838	91909837	91909834	91909836	91909840
2570 3070 4070 5070	**X4**	91909802	91909806	91909805	91909803	91909804	K104-8
2095 2595 3095 4095 5095	**X3**	91909832	91909838	91909837	91909834	91909836	91909840
2095 2595 3095 4095 5095 6095	**X4**	91909874	91909879	91909878	91909875	91909876	91909880
4095 5095 6095	**XA**	91910609	91910612	91910611	91910610	—	—
2512 3012 4012	**X3**	91909909	91909913	91909912	91909910	91909911	91909914
2512 3012 4012 5012 6012 8012	**X4**	91909944	91909948	91909947	91909945	—	—
2512 3012 4012 5012 6012 8012	**XA**	91910715	91910718	91910717	91910716	—	—
8012 1012	**X5**	91910061	91910066	91910065	91910063	91910064	—
50157	**XA**	91910629	91910632	91910631	91910630	-	-
60157	**X5**	91910192	91910196	91910195	91910193	91910194	-
80157	**X6XXXX**	91910246	91910250	K112-6	91910247	91910248	-

VLS/VLSC (C-Face Motors)

Motor Frame Size	Pump Size	Construction Code	Shaft Kits
182/184TC	X3	7", 9.5"	98571486
		12"	98571497
	XA		98571498
213/215TC	X3	7", 9.5"	98571478
		12"	98571487
	X4	9.5"	98571485
	XA		98571482
		12", 15"	98571480*
		12"	98571499**
		15"	98571481***
	X5	12"	98571513
254/256TC	X3	7", 9.5"	98571488
		12"	98571478
	X4	7", 9.5"	98571485
	XA	7"	98571518
		9.5"	98571515
		12", 15"	98571482
284/286TSC	X4	9.5"	98571489
	XA		98571480
284/286TC	X4	7"	98571490
	XA	9.5", 12"	98571482
		15"	98571480
	X5	12"	98571513
324/326TSC	X4	7", 9.5"	98571490
	XA	7"	98571519
		9.5"	98571495
		12"	98571484
		15"	98571483
324/326TC	X4	9.5"	98571516
	XA		98571517
	X5	12"	98571492
		15"	98571512
364/365TSC	X4	7"	98571490
364/365TC	X5	12"	98571493
	XA	15"	98571483
	X5		98571512^
		15"	98571511^^
404/405TSC	X4	9.5"	98571516
	XA		98571517
404/405TC	XA	12"	98571495
	X5		98571491
		15"	98571511^^
			98571479^
444/445TC	X5	15"	98571511

* 8012 only
** all 12" except 8012
*** 4015 only
^ all 15" except 8015
^^ 8015 only

VLS/VLSC (C-Face Motors)

Motor Frame Size	Construction Code	Pump Size	Couplings	O-Rings	Bushings
182/184TC	**X3**	**7", 9.5", 12"**	98681226	91869106	91844356
182/184TC	**XA**	**12"**	98681226	91869106	91844355
213/215TC	**X3**	**7", 9.5", 12"**	98681227	91869106	91844356
213/215TC	**XA**	**7", 9.5", 15"**	98681227	91869106	91844355
213/215TC	**X4**	**9.5"**	98681227	91869106	91844355
213/215TC	**X5**	**12"**	98681227	91869106	91844353
254/256TC	**X3**	**7", 9.5", 12"**	98681228	91869106	91844356
254/256TC	**XA**	**7", 9.5", 12", 15"**	98681228	91869106	91844355
254/256TC	**X4**	**7", 9.5"**	98681228	91869106	91844355
254/256TC	**X5**	**12"**	98681228	91869106	91844353
284/286TSC	**XA**	**9.5"**	98681228	91869106	91844355
284/286TSC	**X4**	**9.5"**	98681228	91869106	91844355
284/286TC	**XA**	**9.5", 12", 15"**	98681230	91869106	91844355
284/286TC	**X5**	**12", 15"**	98681230	91869106	91844353
284/286TC	**X4**	**7"**	98681229	91869106	91844355
284/286TC	**XA**	**7"**	98681229	91869106	91844355
324/326TC	**X4**	**7"**	98681229	91869106	91844355
324/326TSC	**X4**	**7", 9.5"**	98681251	91869106	91844355
324/326TSC	**XA**	**9.5"**	98681251	91869106	91844355
324/326TC	**XA**	**12", 15"**	98681252	91869106	91844355
324/326TC	**X4**	**9.5"**	98681252	91869106	91844355
324/326TC	**X5**	**12", 15"**	98681253	91869106	91844353
364/365TSC	**X4**	**9.5"**	98681251	91869106	91844355
364/365TC	**XA**	**12"**	98681252	91869106	91844355
364/365TC	**XA**	**15"**	98682567	91869106	91844355
364/365TC	**X5**	**12", 15"**	98682569	91869106	91844353
404/405TSC	**X4**	**9.5"**	98681252	91869106	91844355
404/405TSC	**XA**	**9.5"**	98681252	91869106	91844355
404/405TC	**XA**	**12"**	98682568	91869106	91844355
404/405TC	**X5**	**12", 15"**	98682591	91869106	91844353
444/445TC	**X5**	**15"**	98694579	91869106	91844353

VLS/VLSC (C-Face Motors)

Motor Frame Size	Construction Code	Pump Size	Hardware Kits
184-405TC	X3	7"	98467976
	X4		
182-405TC	X4	9.5"	98468694
	X3		
	XA		
	X3	12"	98468716
	X4	9.5"	
	XA	12"	
324TSC-405TC	X5	12"	98468720
	XA	15"	98468727
	X5		
284/286TC	X3	7"	98468729
	X4		
	X3	9.5"	98468751
	X4		
	X3	12"	98468753
	XA		
182-256TC	XA	15"	98468754
284/286TC	XA	15"	98468756
324/326TC	XA	12"	RTF
444/445TC	X5	15"	RTF

Construction Code	Pump Size	Gasket Part Number	Gasket Description
X3 X4	7"	91848837	Volute Gasket
X3 X4 XA	9.5"	91849028 91848837	Volute Gasket Backplate Gasket
X3 XA	12"	91848843 91848837	Volute Gasket Backplate Gasket

EXPLANATION OF PUMP CODING-
(REFER TO PUMP NAMEPLATE)



NOTE: This Replacement Parts Guide is valid for products beginning with product codes 16, 17, 26, and 27 only.
Product Code 16= Close coupled Vertical Inline Centrifugal, type VL
Product Code 17= Split coupled Vertical Inline Centrifugal, type VLS
Product Code 26= Vertical Inline Centrifugal with Variable Frequency Drive, type VLC
Product Code 27= Split coupled Vertical Inline Centrifugal with Variable Frequency Drive, type VLSC

KIT COMPONENTS

IMPELLER KIT:
- -Impeller
- -Volute Gasket
- -Backplate Gasket
- -Impeller Cap Screw
- -Impeller Washer
- -Impeller Key
- -Impeller Nut

VL SEAL KIT:
- -Mechanical Seal
- -Volute Gasket
- -Backplate Gasket
- -Seal Cap Gasket
- -Impeller Cap Screw
- -Impeller Washer
- -Impeller Key
- -Impeller Nut

WEAR RING KIT:
- -Wear Rings, Bronze

VLS/VLSC: Seal Kit
- -Mechanical Seal
- -O-Ring

HARDWARE KIT:
- -Cap Screws

VLS/VLSC: ***(Non-kitted parts)***
- -Seal Cap O-rings
- -Bushings
- -Couplings / Key Sets for Couplings

GASKETS: ***(non-kitted)***
- -Individual

SLEEVES: ***(Not used on Type VLS/VLSC)***
(Non-Kitted)
- -Bronze
- -Stainless Steel

SHAFT KIT: ***(Type VLS/VLSC)***
- -Shaft
- -Bushing
- -Seal Cap Gasket

NOTES:

Kits may not contain all parts listed. They are individually selected for each pump, according to the pump construction and design.

Kits contain gaskets wherever gasket replacement is indicated, as noted above. Should "individual" gaskets be required. See Page 3.

Seal Kits are always recommended as spare parts.

Grundfos CBS Inc.
902 Koomey Road, Brookshire, Texas 77423
Tel: 281-994-2700 Toll Free: 800-955-5847 Web: www.grundfosexpresssuite.com

PACO VL

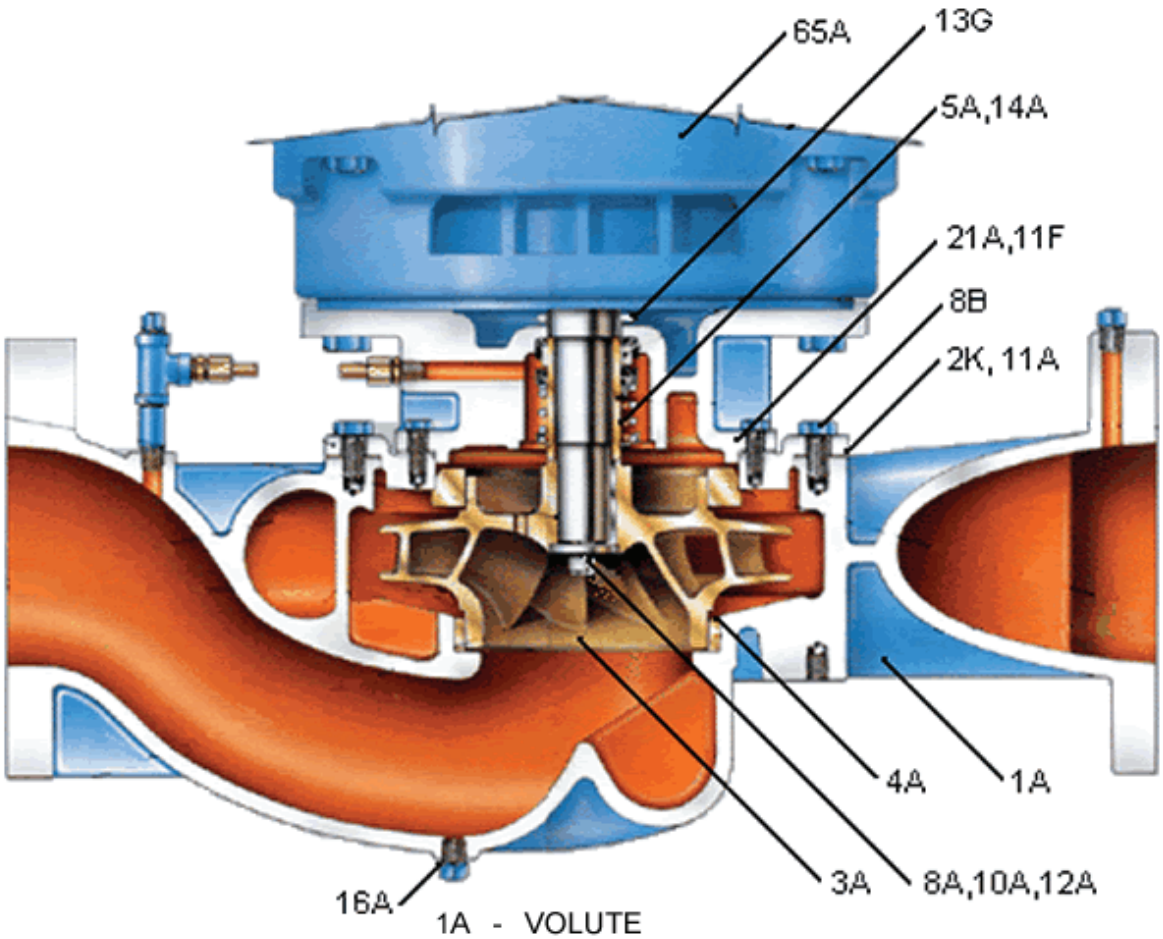

1A - VOLUTE
2K - BACKPLATE
3A - IMPELLER
4A - CASE WEAR RING
5A - SHAFT SLEEVE
8A - IMPELLER CAPSCREW
8B - CASING BOLTING
10A - WASHER, IMPELLER
11A - BACKPLATE GASKET
11F - BRACKET GASKET
12A - KEY, IMPELLER
13G - SLINGER
14A - SHAFT SEAL
16A - DRAIN PLUG
*20J - PUMP STAND
21A - MOTOR BRACKET
65A - MOTOR

8

Mécanique Nordique
Plumbing Heating Ventillation
mecanique.nordique@hotmail.com
1255 Rue J.A.Bombardier Lévis QC G7A 2P4
Tél : (418) 496-1109 Fax : (418) 496-3803

REVIEWED BY CONTRACTOR
Kudlik Construction Ltd.
NAME: Sandra Rousseau P.Eng
DATE: Jun 01, 2018

IQUALUIT WWTP UPGRADES

DRAWING FOR APPROVAL

ENGINEER: **NUNAMI STANTEC LIMITED**

DRAWING #: AD-008

Section	: 22 10 10
Article	: 2.1 & 2.2
Plans	: M802 PUMP SCHEDULE
Application	: PLUMBING PUMPS
Brand	: GRUNDFOS
Model	: TP 40-40/4B , ALPHA2 15-55 SF , UPS 40-40 FB ,
Revised #	:
Supplyer	: WOLSELEY
Date	: **01/06/2018**
By	: Martin Boucher

STANTEC PROJECT #: 110126045
SUBMITTAL # AD-008

This review by Stantec is for general conformance with the design concept of Stantec's design of the:
☐ Architectural ☐ Electrical
☐ Structural ☐ Other
☑ Mechanical

component(s) only and does not mean that Stantec has verified or approves the shop drawing(s). The Contractor remains solely responsible for the shop drawing(s) and this review by Stantec does not relieve the Contractor of the Contractor's responsibility for errors or omissions in the shop drawing(s) or for meeting all requirements of the contract documents. This review does not mean that Stantec approves the detailed design inherent in the shop drawing, responsibility for which shall remain with the Contractor submitting same, nor does this review mean that Stantec accepts any deviation of the shop drawing(s) from the contract documents. The Contractor is responsible for confirming all dimensions and correlating them at the job site, for all construction means, methods and techniques, and for coordination of construction work of all trades, including coordination of all shop drawings.

Stantec

☑ REVIEWED
☐ REVIEWED, AS NOTED
☐ REVISE AND RESUBMIT
☐ NOT REVIEWED

DATE 2018-06-04
BY Brendan Zrum, P.Eng

GRUNDFOS

Company name: Grundfos Canada
Created by: Louis Pelletier
Phone:
Email: lpelletier@grundfos.com
Date: 5/30/2018

Position	Count	Description
	1	**TP 40-40/4 B A-G-Z-BUBE**

TAG: P-3.1 & P-3.2
PLUMBING PUMPS
SPEC 22 10 10 2.2
PUMP SCHEDULE M802



Product No.: On request

Single-stage centrifugal volute in-line single-head pump:
- neck rings and impeller made of stainless steel
- cataphoresis treatment
- shell coupling
- top-pull-out principle for easy maintenance
- optimized hydraulics
- in-line design with opposite suction and discharge ports enabling mounting in pipework or on a concrete foundation
- corrosion resistant maintenance-free mechanical shaft seal.

The motor is a 1-phase AC motor.

Liquid:

Pumped liquid:	Water
Liquid temperature range:	5 .. 284 °F
Liquid temperature during operation:	68 °F
Density:	62.29 lb/ft³

Technical:

Speed for pump data:	1770 rpm
Actual calculated flow:	1.7 l/s
Resulting head of the pump:	3.477 m
Primary shaft seal:	BUBE
Approvals on motor nameplate:	UL Recognized Component, CSA
Curve tolerance:	ISO9906:2012 3B

Materials:

Pump housing:	Bronze DIN W.-Nr. 2.1093
Impeller:	Stainless steel DIN W.-Nr. 1.4301 AISI 304

Installation:

Maximum ambient temperature:	104 °F
Maximum operating pressure:	145.04 psi
Flange standard:	USA
Pipe connection:	1 1/2"

Electrical data:

Motor type:	Baldor, TEFC
Rated power - P2:	0.25 kW
Main frequency:	60 Hz
Rated voltage:	1 x 115/230 V
Service factor:	1,35
Rated current:	6/3 A
Rated speed:	1725 rpm
Number of poles:	4
Insulation class (IEC 85):	B

Others:

Net weight:	60.2 lb
Gross weight:	66 lb
Shipping volume:	1.98 ft³

Company name: Grundfos Canada
Created by: Louis Pelletier
Phone:
Email: lpelletier@grundfos.com
Date: 5/30/2018

On request TP 40-40/4 B A-G-Z-BUBE 60 Hz

TAG: P-3.1 & P-3.2

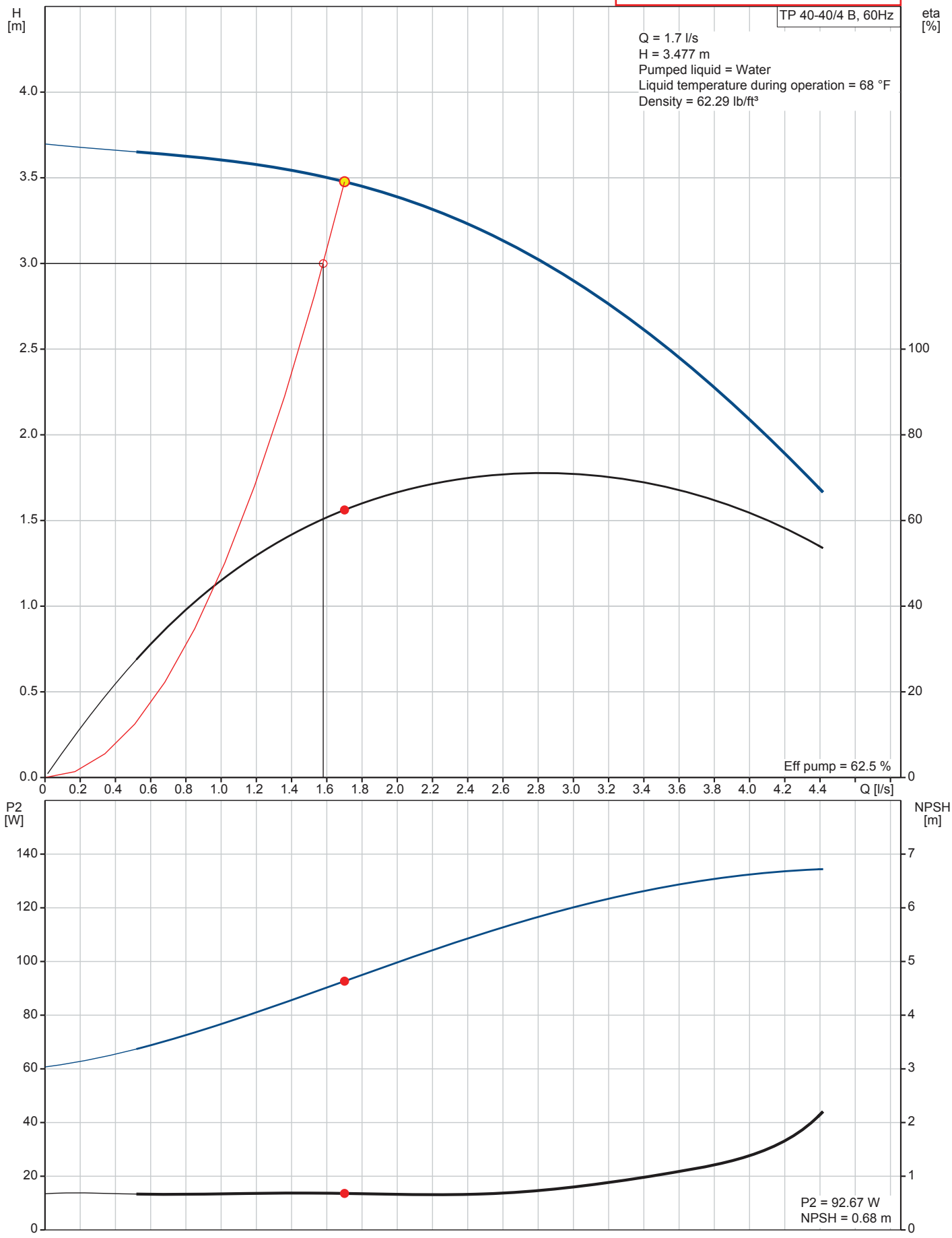

Company name: Grundfos Canada
Created by: Louis Pelletier
Phone:
Email: lpelletier@grundfos.com
Date: 5/30/2018

On request TP 40-40/4 B A-G-Z-BUBE 60 Hz

TAG: P-3.1 & P-3.2

PLUMBING PUMPS

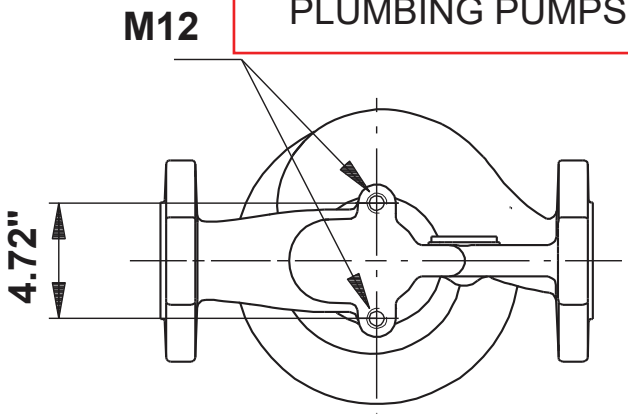

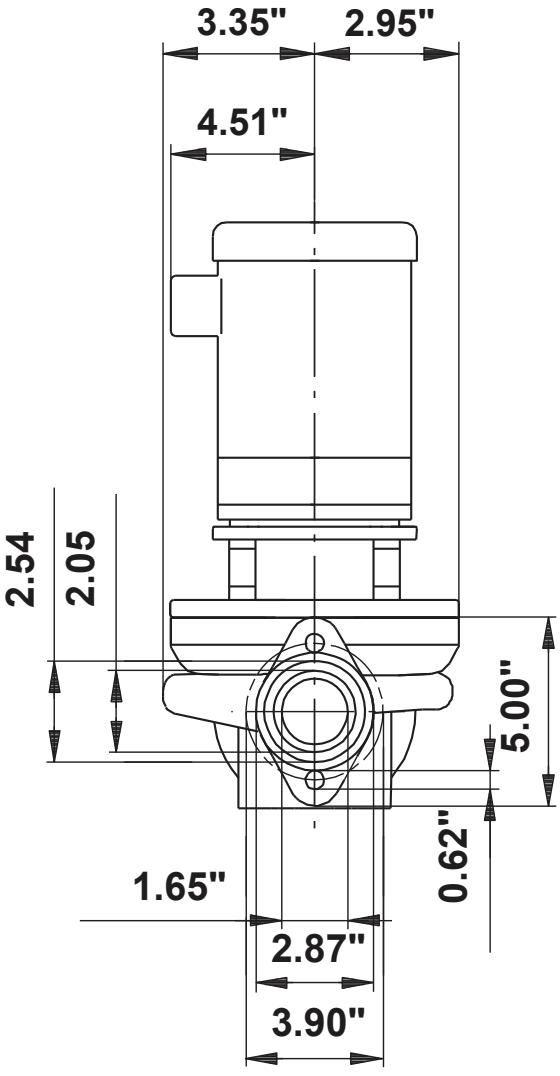

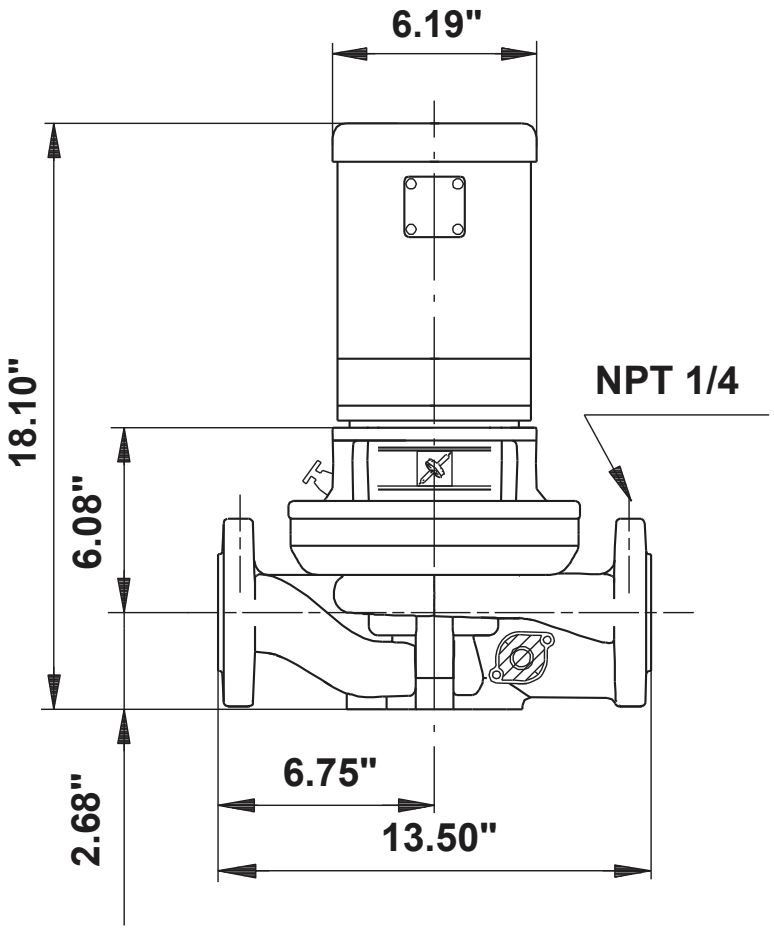

Note! All units are in [mm] unless otherwise stated.
Disclaimer: This simplified dimensional drawing does not show all details.

GRUNDFOS

Company name: Grundfos Canada
Created by: Louis Pelletier
Phone:
Email: lpelletier@grundfos.com
Date: 5/30/2018

Position	Count	Description
→	1	**ALPHA2 15-55SF**

TAG: P-3.3
PLUMBING PUMP
SPEC 22 10 10 2.1
PUMP SCHEDULE M802



Product No.: 99163937

GRUNDFOS ALPHA2
The next generation of energy efficient circulators.

Grundfos ALPHA2 is versatile and efficient whether you use one of its seven speed or pressure control settings or simply leave it on the factory setting AUTOADAPT™.
The ALPHA2 with its ECM motor design reduces energy consumption by 50%.

In AUTOADAPT mode, the pump will automatically analyze the heating system,
find the optimum setting, continue to adjust its operation to changes in demand, ensuring the lowest possible energy consumption without
sacrificing comfort.

Compact design
With the electronics integrated into the motor housing and standard 2-Bolt flange connection, installation into confined spaces and challenging applications are now possible.
The ALPHA2 materials and design resist blockage from magnetite and iron oxide particles found in closed hydronic systems.

ALPHA2 is complete with an integrated check-valve, foam insulation jacket, and nut captures for flanges. ALPHA2 comes in both cast iron and stainless steel models

Two options for power connections
The large LED display shows the current energy consumption in Watts and estimated flow in gallons per minute For installation, you have the flexibility to use either our unique ALPHA Plug with line cord or the ALPHA2 with
terminal box for conduit connections

One-touch operation
Simple push button control enables the ALPHA2 to be programmed in one of 3-constant speed, 3-constant pressure, or AUTOADAPT control modes. The current operating mode is always visible on the ALPHA2's LED display

LED Display
The easy-to-read LED display indicating power (Watts) consumption and flow (GPM) estimation.

Robust startup
Enables the ALPHA2 to continuously attempt to restart – indefinitely – in blocked rotor conditions

Liquid:

Pumped liquid:	Water
Liquid temperature range:	35.6 .. 230 °F
Liquid temperature during operation:	140 °F
Density:	61.35 lb/ft³

Technical:

TF class:	110
Approvals on nameplate:	ETL, FCC, NSF

Materials:

Pump housing:	Stainless steel EN 1.4308
Impeller:	Composite

Installation:

Range of ambient temperature:	32 .. 104 °F
Maximum operating pressure:	145.04 psi

GRUNDFOS

Company name: Grundfos Canada
Created by: Louis Pelletier
Phone:
Email: lpelletier@grundfos.com
Date: 5/30/2018

Position	Count	Description

TAG: P-3.3
PLUMBING PUMP

Type of connection:	GF
Pipe connection:	1 1/2
Pressure stage:	PN 10
Port-to-port length:	6 1/2 in

Electrical data:

Power input - P1:	5 .. 45 W
Main frequency:	60 Hz
Rated voltage:	1 x 115 V
Maximum current consumption:	0.1 .. 0.65 A
Enclosure class (IEC 34-5):	IP42
Insulation class (IEC 85):	F

Others:

Net weight:	5.6 lb
Gross weight:	6.28 lb
Shipping volume:	252 ft³
Country of origin:	US
Custom tariff no.:	8413.70.10.90

Company name: Grundfos Canada
Created by: Louis Pelletier
Phone:
Email: lpelletier@grundfos.com
Date: 5/30/2018

99163937 ALPHA2 15-55SF 60 Hz

TAG: P-3.3

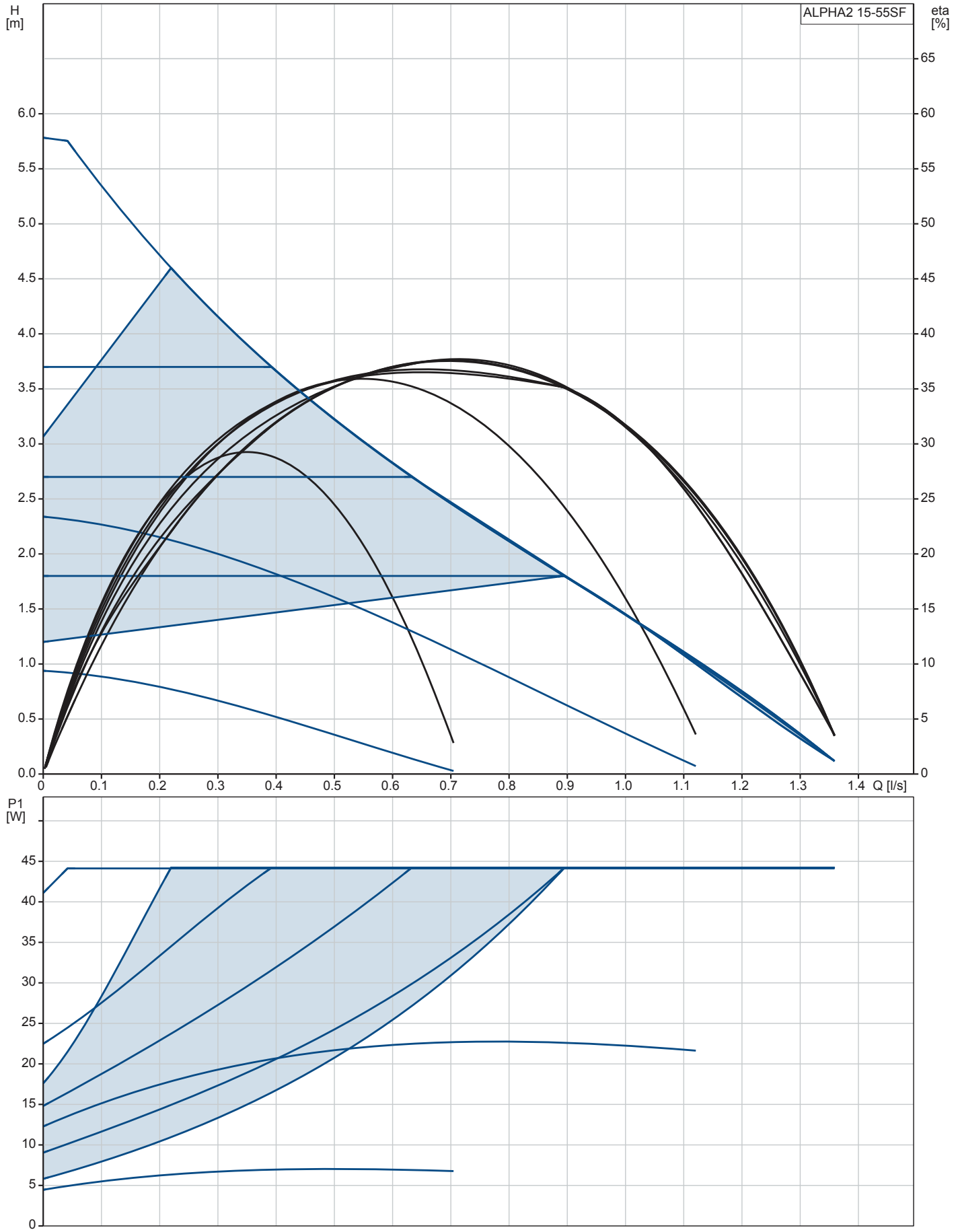

Company name: Grundfos Canada
Created by: Louis Pelletier
Phone:
Email: lpelletier@grundfos.com
Date: 5/30/2018

99163937 ALPHA2 15-55SF 60 Hz

TAG: P-3.3
PLUMBING PUMP

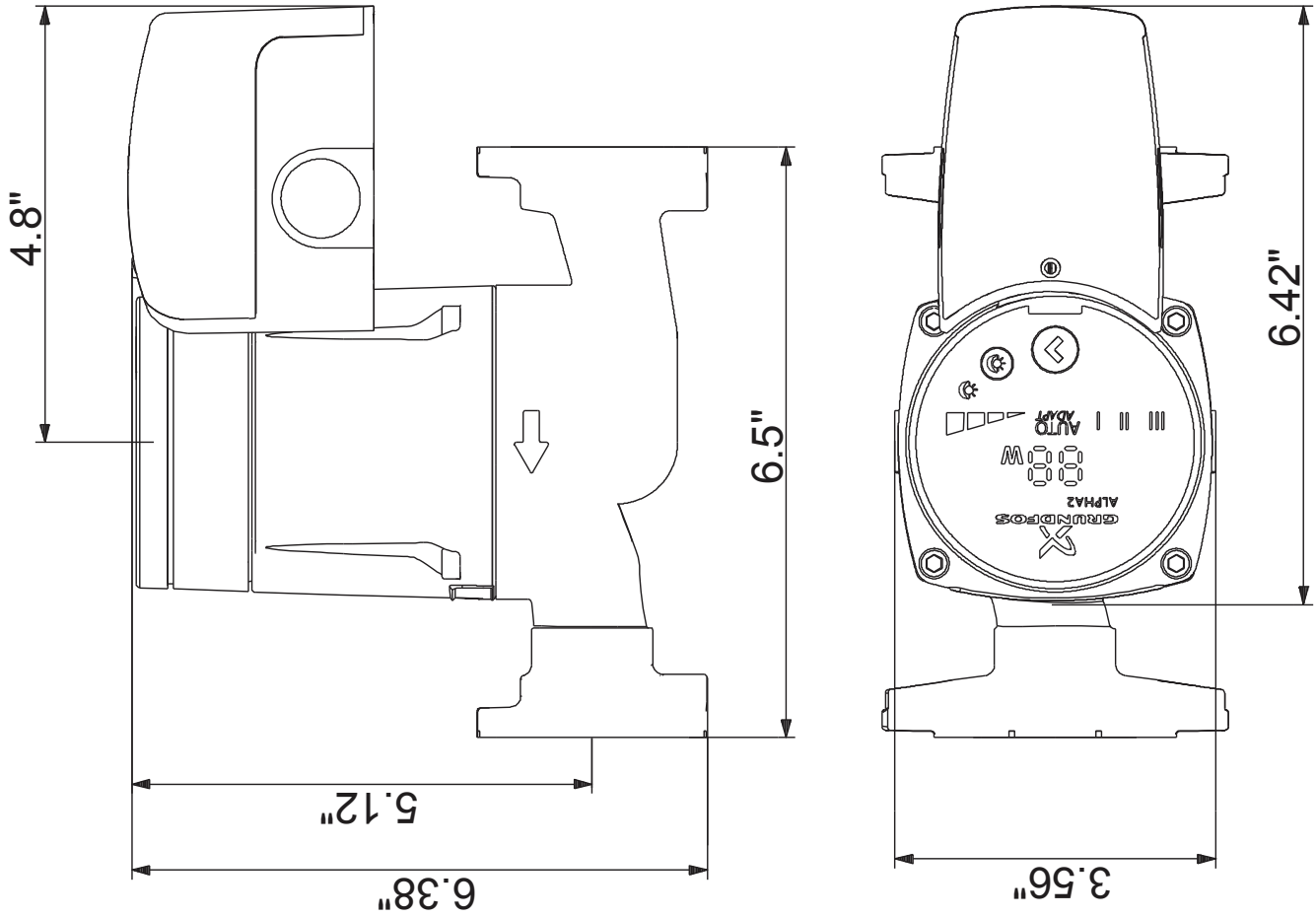

Note! All units are in [mm] unless otherwise stated.
Disclaimer: This simplified dimensional drawing does not show all details.

GRUNDFOS

Company name: Grundfos Canada
Created by: Louis Pelletier
Phone:
Email: lpelletier@grundfos.com
Date: 5/30/2018

Position	Count	Description
	1	**UPS 40-40 F B**

TAG: P-3.4 & P-3.5
SPEC 22 10 10 2.2
PUMP SCHEDULE M802



Product photo could vary from the actual product

Product No.: 96402753

The pump is of the canned rotor type, i.e. pump and motor form an integral unit without shaft seal and with only two gaskets for sealing.
The bearings are lubricatd by the pumped liquid.

In order to avoid problems in connection with disposal, great importance has been attached to using as few different materials as possible.

The pump is characterized by:
* 3 speed motor.
* Ceramic radial bearings.
* Carbon axial bearing.
* Stainless steel rotor can, bearing plate and rotor cladding.
* Aluminium alloy stator housing.
* Bronze pump housing.
* Stator with built-in thermal switch.

The motor is a 1-phase motor.

The pump is supplied with a standard module in the terminal box.
The standard module is to be connected to the mains supply via external contactor.

Controls:

Relay:	with relay

Liquid:

Pumped liquid:	Water
Liquid temperature range:	14 .. 248 °F
Liquid temperature during operation:	140 °F
Density:	61.35 lb/ft³

Technical:

Actual calculated flow:	1.595 l/s
Resulting head of the pump:	3.057 m
Approvals on nameplate:	CUL

Materials:

Pump housing:	Bronze DIN W.-Nr. 2.1176.01
Impeller:	Stainless steel DIN W.-Nr. 1.4301 AISI 304

Installation:

Range of ambient temperature:	32 .. 104 °F
Maximum operating pressure:	145.04 psi
Flange standard:	USA Oval
Type of connection:	F
Pipe connection:	GF 40/43

Company name: Grundfos Canada
Created by: Louis Pelletier
Phone:
Email: lpelletier@grundfos.com
Date: 5/30/2018

Position	Count	Description

TAG: P-3.4 & P-3.5

Pressure stage:	145 psi
Port-to-port length:	13 1/2 in
Electrical data:	
Power input in speed 1:	125 W
Power input in speed 2:	150 W
Max. power input:	170 W
Main frequency:	60 Hz
Rated voltage:	1 x 115 V
Current in speed 1:	1.34 A
Current in speed 2:	1.48 A
Current in speed 3:	1.6 A
Cos phi in speed 1:	0,81
Cos phi in speed 2:	0,88
Cos phi:	0,92
Capacitor size - run:	25 µF/400 V
Enclosure class (IEC 34-5):	X4D
Insulation class (IEC 85):	F
Others:	
Net weight:	43.7 lb
Gross weight:	49.8 lb
Shipping volume:	2.08 ft³

Company name: Grundfos Canada
Created by: Louis Pelletier
Phone:
Email: lpelletier@grundfos.com
Date: 5/30/2018

96402753 UPS 40-40 F B 60 Hz

TAG: P-3.4 & P-3.5

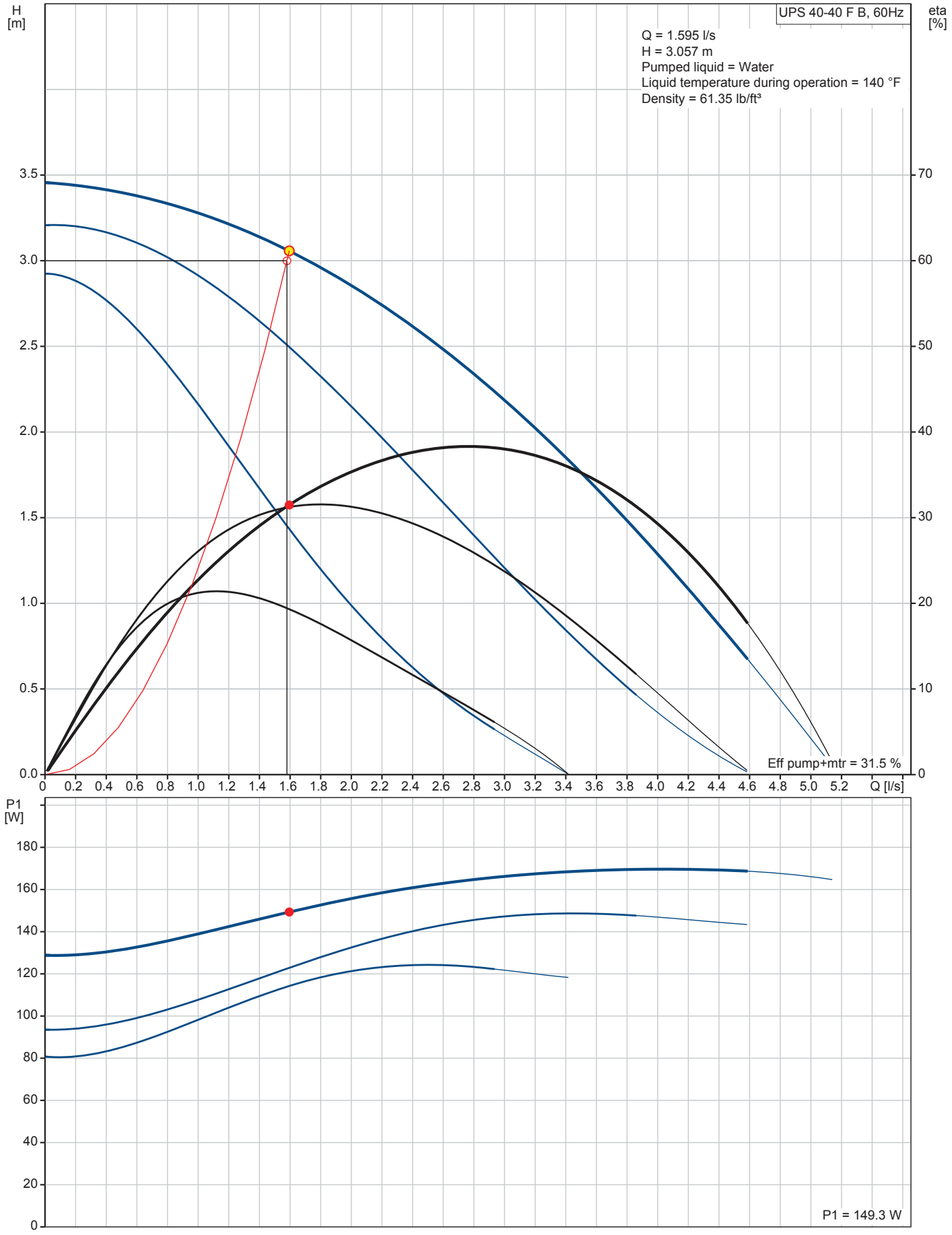

Company name: Grundfos Canada
Created by: Louis Pelletier
Phone:
Email: lpelletier@grundfos.com
Date: 5/30/2018

96402753 UPS 40-40 F B 60 Hz

TAG: P-3.4 & P-3.5

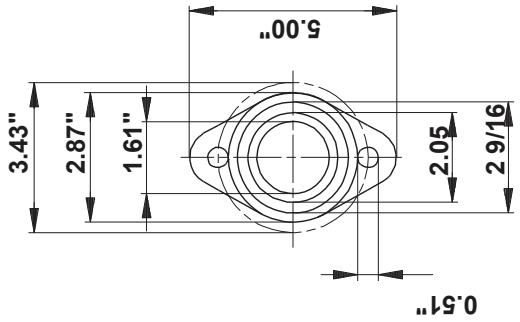

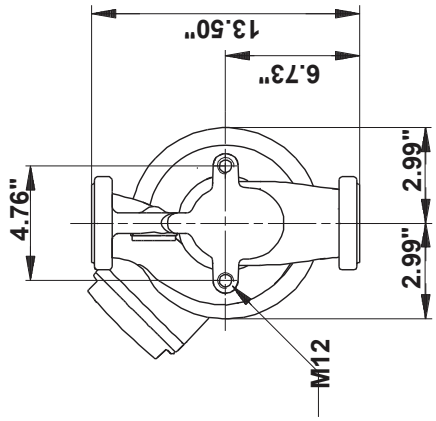

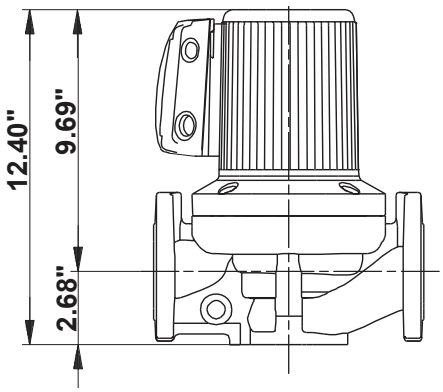

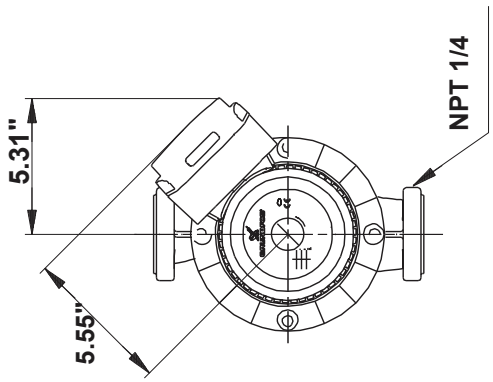

Note! All units are in [mm] unless otherwise stated.
Disclaimer: This simplified dimensional drawing does not show all details.

BE › THINK › INNOVATE ›

Being responsible is our foundation
Thinking ahead makes it possible
Innovation is the essence

GRUNDFOS **INSTRUCTIONS**

VersaFlo® TP

Direct Coupled In-Line Single Stage Circulator Pumps

Installation and operating instructions

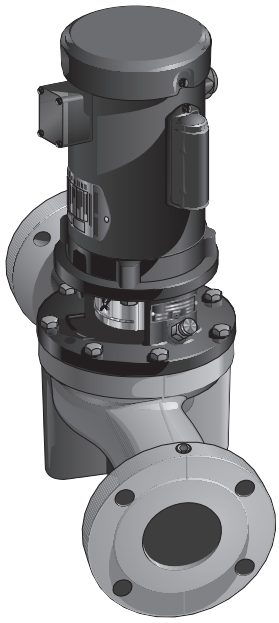

L-TP-TL-001	10/06
PRINTED IN THE USA	

www.grundfos.com

GRUNDFOS

BE › THINK › INNOVATE ›

GRUNDFOS

LIMITED WARRANTY

Products manufactured by GRUNDFOS PUMPS CORPORATION (GRUNDFOS) are warranted to the original user only to be free of defects in material and workmanship for a period of 24 months from date of installation, but not more than 30 months from date of manufacture. GRUNDFOS' liability under this warranty shall be limited to repairing or replacing at GRUNDFOS' option, without charge, F.O.B. GRUNDFOS' factory or authorized service station, any product of GRUNDFOS manufacture. GRUNDFOS will not be liable for any costs of removal, installation, transportation, or any other charges which may arise in connection with a warranty claim. Products which are sold but not manufactured by GRUNDFOS are subject to the warranty provided by the manufacturer of said products and not by GRUNDFOS' warranty. GRUNDFOS will not be liable for damage or wear to products caused by abnormal operating conditions, accident, abuse, misuse, unauthorized alteration or repair, or if the product was not installed in accordance with GRUNDFOS' printed installation and operating instructions.

To obtain service under this warranty, the defective product must be returned to the distributor or dealer of GRUNDFOS products from which it was purchased together with proof of purchase and installation date, failure date, and supporting installation data. Unless otherwise provided, the distributor or dealer will contact GRUNDFOS or an authorized service station for instructions. Any defective product to be returned to GRUNDFOS or a service station must be sent freight prepaid; documentation supporting the warranty claim and/or a Return Material Authorization must be included if so instructed.

GRUNDFOS WILL NOT BE LIABLE FOR ANY INCIDENTAL OR CONSEQUENTIAL DAMAGES, LOSSES, OR EXPENSES ARISING FROM INSTALLATION, USE, OR ANY OTHER CAUSES. THERE ARE NO EXPRESS OR IMPLIED WARRANTIES, INCLUDING MERCHANTABILITY OR FITNESS FOR A PARTICULAR PURPOSE, WHICH EXTEND BEYOND THOSE WARRANTIES DESCRIBED OR REFERRED TO ABOVE.

Some jurisdictions do not allow the exclusion or limitation of incidental or consequential damages and some jurisdictions do not allow limitations on how long implied warranties may last. Therefore, the above limitations or exclusions may not apply to you. This warranty gives you specific legal rights and you may also have other rights which vary from jurisdiction to jurisdiction.

Please leave these instructions with the pump for future reference.

U.S.A.
GRUNDFOS Pumps Corporation
17100 West 118th Terrace
Olathe, Kansas 66061
Phone: +1-913-227-3400
Telefax: +1-913-227-3500

Canada
GRUNDFOS Canada, Inc.
2941 Brighton Road
Oakville, Ontario
L6H 6C9
Phone: +1-905-829-9533
Telefax: +1-905-829-9512

Mexico
Bombas GRUNDFOS de Mexico S.A. de C.V.
Boulevard TLC No. 15
Parque Industrial Stiva Aeropuerto
C.P. 66600 Apodaca, N.L. Mexico
Phone: +1-52-81-8144 4000
Telefax: +1-52-81-8144 4010

Notes

Contents

		Page
1.	**Pre-Installation Checklist**	**4**
1.1	Confirm You Have the Right Pump	4
1.2	Check the Condition of the Pump	4
1.3	Electrical Requirements	4
1.4	Is the Application Correct for This Pump?	4
1.5	Read This Guide Thoroughly	5
2.	**Installation Procedures**	**5**
2.1	Electrical Preparation	5
2.1.1	Terminal Box Position	5
2.1.2	Single-Phase Motors	5
2.1.3	Three-Phase Motors	5
2.1.4	Other Wiring Considerations	5
2.2	Piping Considerations	5
2.3	Installing the Pump	6
2.3.1	Pump Location	6
2.3.2	Position in Piping System	6
2.3.3	Proper Orientation	6
2.3.4	Direction of Flow for Specific Applications	6
2.3.5	Suggested Accessories	6
2.4	Electrical Hookup	6
3.	**Starting the Pump the First Time**	**6**
3.1	Prime the Pump	6
3.1.1	In Closed/Open System Where Water Source is Above the Pump	6
3.1.2	In Open Systems	7
3.2	Check the Direction of Rotation	7
3.3	Starting and Adjusting	7
4.	**Maintenance**	**7**
4.1	Servicing the Pump Head	7
4.1.1	Step 1: Remove the Pump Head	7
4.1.1.1	Assembly	8
4.1.2	Step 2: Re-Install the Pump Head	8
4.1.3	Motor Replacement	9
4.1.3.1	Disassembly	9
4.1.4	Pump Lubrication	9
4.1.5	Motor Lubrication	9
4.1.6	Lubrication Schedule	9
4.1.7	Periodic Safety Checks	9
4.1.8	Service Conditions	10
4.1.9	Rapid Cycling	10
4.1.10	Freeze Protection	10
5.	**Troubleshooting**	**10**
5.1	Preliminary Checks	10
5.1.1	Supply Voltage	10
5.1.1.1	How to Measure	10
5.1.1.2	Evaluation	10
5.1.2	Current Measurement	10
5.1.2.1	How to Measure	10
5.1.2.2	Evaluation	10
5.1.3	Winding Resistance	11
5.1.3.1	How to Measure	11
5.1.3.2	Evaluation	11
5.1.4	Insulation Resistance (Lead to Ground)	11
5.1.4.1	How to Measure	11
5.1.4.2	Evaluation	11
5.2	Diagnosing Specific Problems	12

Safety Warning

Read This Booklet

This booklet is designed to help a certified installer begin operation of and trouble-shoot Grundfos VersaFlo™ TP pumps. This booklet should be left with the owner of the pump for future reference and information regarding its operation. Should the owner experience any problems with the pump, a certified professional should be contacted.

Electrical Work

All electrical work should be performed by a qualified electrician in accordance with the latest edition of the National Electrical Code, local codes and regulations.

Shock Hazard



A faulty motor or wiring can cause electrical shock that could be fatal, whether touched directly or conducted through standing water. For this reason, proper grounding of the pump to the power supply's grounding terminal is required for safe installation and operation.

The ground wire should be a copper conductor at least the size of the circuit conductors supplying power to the motor. Do not ground to a gas supply line.

In all installations, the above-ground metal plumbing should be connected to the power supply ground as described in Article 250-80 of the National Electrical Code.

1. Pre-Installation Checklist

1.1 Confirm You Have the Right Pump

- Read the pump nameplate to make sure that it is the correct one.
- Compare the pump's nameplate data and its performance curve (for head, GPM, etc.) with the application in which you plan to install it.
- ***Will the pump do what you expect it to do?***
- The nomenclature for the VersaFlo TP line of Grundfos pumps is:

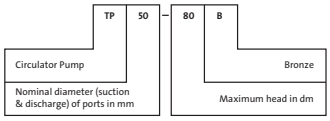

1.2 Check the Condition of the Pump

The shipping carton your pump came in is designed around your pump during production to prevent damage. As a precaution, it should remain in the carton until you are ready to install it. At that point, look at the pump and examine it for any damage that may have occurred during shipping. Examine any other parts of the shipment as well for any visible damage.

1.3 Electrical Requirements

Check the motor nameplate to determine the proper voltage, phase, and frequency required. The voltage must be within ± 10% of the specified motor nameplate voltage. Dual volt-age motors must be internally wired to match the electrical supply. A wiring connection diagram is affixed to the motor.

Fig. 1

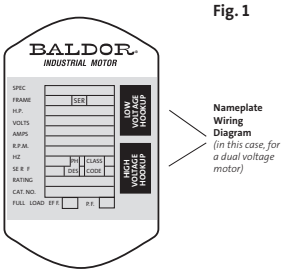

Nameplate Wiring Diagram *(in this case, for a dual voltage motor)*

1.4 Is the Application Correct for This Pump?

Compare the pump's nameplate data or its performance curve with the application in which you plan to install it. Will it perform the way you want it to perform? Also, make sure the application falls within the following limits:

Approved applications:

- Open or closed water systems
- Glycol solutions up to 50% (requires optional RUVV mechanical seal)
- HVAC hot and cooled water
- Condenser or cooling tower heat exchanger circulation
- Commercial solar
- Commercial heating and fan coil systems
- Geothermal systems
- Agricultural temperature conditioning
- Snow melting

Correct it by...
If no voltage at motor, check feeder panel for tripped circuits.
Replace blown fuses or reset circuit breaker. If new fuses blow or circuit breaker trips, the terminal box wiring must be checked.
Replace burned heaters or reset. Inspect starter for other damage. If heater trips again, check the supply voltage and starter holding coil.
If no voltage, check the control circuit fuses. If there is voltage, check the holding coil for shorts. Replace bad coil.
Replace worn or defective parts.
If the motor windings are open or grounded, replace the motor.
When the meter is connected, the needle should jump toward "0" ohms and slowly drift back to infinity. Replace capacitor if defective.
Correct wiring and change leads as required.
Refill the pump, replace lug and start the pump. Long suction lines must be filled before starting the pump.
Clean and replace. Re-prime the pump.
Reduce suction lift by lowering pump, increasing suction line size or by removing high friction-loss fittings.
Repair all leaks and retighten all loose fittings.
Convert PSI to feet (PSI x 2.31 = _____ ft.). Refer to the specific pump curve for shutoff head for that pump model. If actual head is close to curve, the pump is probably OK. If not, remove pump and inspect.
Readjust switch or replace if defective.
Readjust setting (refer to level control manufacturer's data). Replace if defective.
Check diaphragm for leak. Check tank and piping for leaks with soap and water solution. Check air-to-water volume.
Tank volume should be approximately 10 gal. for each gpm of pump capacity. The normal air volume is 2/3 of the total tank volume at the pump cut-in pressure.
If voltage varies more than ±10%, contact power company. Check wire sizing.
Increase heater size or adjust trip setting.
Must be within ±5%. If not, check motor and wiring.
If an open or grounded winding is found, repair or replace the motor.
Tighten loose terminals. Replace damaged wire.
If shaft does not rotate, remove pump and inspect. Disassemble and repair.
When the ohmmeter is connected to the capacitor, the needle should jump towards "0" ohms and slowly drift back to infinity; or, with the capacitor meter the UF reading should be ±10% of capacitor rating. Replace if defective.

5.2 Diagnosing Specific Problems

If the pump...	It may be caused by...	Check this by...
Does not run	1. No power at motor.	Check for voltage at terminal box.
	2. Fuses are blown or circuit breakers are tripped.	Turn off power and remove fuses and check for continuity with an ohmmeter.
	3. Motor starter overloads are burned or have tripped.	Check for voltage on the line and load side of the starter.
	4. Starter does not energize.	Energize control circuit and check for voltage at the holding coil.
	5. Defective controls.	Check all safety and pressure switches for operation. Inspect contact in control devices.
	6. Motor is defective.	Turn off power. Disconnect the wiring. Measure the lead-to-lead resistance with an ohmmeter (set at R x 1). Measure lead-to-ground values with a megohmmeter (R x 100K). Record the measured values.
	7. Defective capacitor. (Single-phase motors)	Turn off the power, then discharge the capacitor. Disconnect the leads and check them with an ohmmeter (R x 100K).
Pump runs, but at a reduced capacity *or* **Doesn't deliver water**	1. Wrong rotation (Three-phase only)	Check for proper electrical connections in terminal box.
	2. Pump is not primed or is air-bound.	Turn pump off, close isolation valves, remove priming plug. Check fluid level.
	3. Strainers, check valves, or foot valves are clogged.	Remove strainer, screen, or valve and inspect.
	4. Suction lift too large.	Install compound pressure gauge at the suction side of the pump. Start pump and compare reading to performance data.
	5. Suction and/or discharge piping leaks.	Pump shaft spins backwards when turned off. Air in suction pipe.
	6. Worn pump.	Install pressure gauge, start the pump, gradually close the discharge valve and read pressure at shut-off.
Pump cycles too much	1. Pressure switch is not properly adjusted or is defective.	Check pressure setting on switch and operation.
	2. Level control is not properly set or is defective.	Check voltage across closed contacts.
	3. Three-phase current is unbalanced.	Check setting and operation.
	4. Tank is too small.	Pump air into tank or diaphragm chamber. Check tank size and air volume in tank.
Fuses blow *or* **Circuit breakers trip**	1. High or low voltage.	Check voltage at the starter panel or terminal box.
	2. Starter overloads are set too low.	Cycle pump and measure amperage.
	3. Three-phase current is unbalanced.	Check the current draw on each lead to the motor.
	4. Motor is shorted or grounded	Turn off power and disconnect incoming power supply from terminal box. Measure winding and lead-to-ground resistance as explained on the previous page.
	5. Wiring or connections are faulty.	Check for proper wiring and loose terminals.
	6. Pump is stuck.	Turn off power and manually rotate pump shaft.
	7. Defective capacitor. (Single-phase only)	Turn off power, discharge capacitor and check with ohmmeter set at highest R value or check with capacitor meter.

Temperature range

- Minimum +5°F (-15°C)
- Maximum +284°F (140°C)

Maximum working pressure:
145 PSI (10 bars)

1.5 Read This Guide Thoroughly

Even if you are very familiar with the installation of this pump, a quick glance through the remaining sections of this guide may help you avoid a potential problem.

For TPE pump installation, see Grundfos Pumps publication L-EC-TL-001.

2. Installation Procedures

2.1 Electrical Preparation

2.1.1 Terminal Box Position

Before installing the pump, you must determine the most convenient position for the terminal box, which can be rotated in 90° increments. To rotate the terminal box, remove the four bolts securing the motor to the pump, lift and rotate the motor, and retighten the bolts. (See page 9.)

Fig. 2

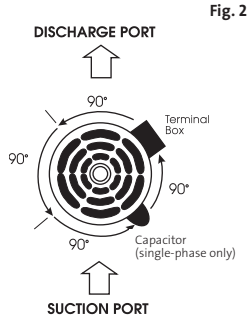

2.1.2 Single-Phase Motors

These motors are multi-voltage with built-in automatic resetting thermal protection to prevent overheating.

2.1.3 Three-Phase Motors

A motor starter is required to ensure the motor is protected from damage caused by low voltage, phase failure, current imbalance, and overloads.

- Motor starter — should be properly sized, have a manual reset, and ambient-compensated extra quick trip in all three legs.
- Overload — should be sized and adjusted to trip at the full-load current rating of the motor. If the motor is lightly loaded, the overload should be re-sized or adjusted to a lower value. **Under no circumstances should the overloads be set to a higher value than the full load current shown on the motor nameplate.** Overloads for auto transfers and resistant starters should be sized in accordance with the recommendations of the manufacturer.
- Fused disconnect — recommended for each pump where service and standby pumps are installed. An alternating switch should be used so each pump can be equally operated to even the wear.

2.1.4 Other Wiring Considerations

The pump must be grounded. Wire sizes should be based on the ampacity (current carrying properties of a conductor) as required by the latest edition of the National Electrical Code or local regulations.

In most cases, direct on line (D.O.L) starting is approved due to the extremely fast run-up time of the motor and the low moment of inertia of the pump and motor. If D.O.L starting is not acceptable, an auto transformer or resistant starter should be used.

2.2 Piping Considerations

Whenever possible, avoid high pressure-loss fittings (elbows, branch tees, etc) directly on either side of the pump. The pump and piping should be adequately supported on both sides to reduce thermal and mechanical stresses on the pump.

Pipe, valves, and fittings should be at least the same diameter as the discharge pipe to reduce excessive fluid velocities and friction losses. They should also have a pressure rating equal to or greater than the maximum system pressure.

A bypass or pressure relief valve should be installed in the discharge pipe if there is any possibility the pump may operate against a closed valve in the discharge line. Circulation through the pump is required to ensure adequate cooling and lubrication of the pump.

Minimum Pumping Rates:

TP32,TP40,TP50 . . . . . .8 GPM

TP80 . . . . . .12 GPM

TP100 . . . . . 20 GPM

The bypass should be routed back to a heat dissipating source or to drain, depending on the liquid being pumped and local codes.

2.3 Installing the Pump

2.3.1 Pump Location

The pump should be installed in a dry, well-ventilated area which is not subject to freezing or large variations in temperature.

The pump should never be mounted within six inches of any obstruction or hot surface.

Pumps to be installed outdoors or in a dusty environment should be ordered with a totally-enclosed-fan-cooled motor (TEFC) attached to prevent motor failure.

2.3.2 Position in Piping System

Do not mount the pump at the highest or lowest point in the piping system.

If the pump is installed at the highest point in the piping system, it may experience reduced performance and increased noise due to air trapped in the pump.

If the pump is located at the lowest point in the piping system, the dirt and sediment in the system may collect inside the pump, causing premature wear to the shaft seal.

2.3.3 Proper Orientation

VersaFlo TP pumps can be mounted either vertically or horizontally, and all positions in between. **However, the motor shaft must never fall below the horizontal plane.**

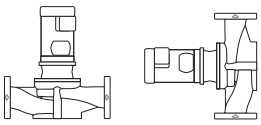

Recommended



DO NOT mount motor with shaft below horizontal plane

2.3.4 Direction of Flow for Specific Applications

Arrows on the flanges of the pump volute show the flow direction of water through the pump.

Pumps used to circulate domestic water should ALWAYS be installed in a vertical section of the circulating pipe and pump upwards, and an effective air vent should be used in the same vertical section of pipe.

If the pump must be installed in a vertical pipe pumping down, an air vent should be installed at the highest point before the pump.

2.3.5 Suggested Accessories

Isolation valves — should be installed on each side of the pump to avoid having to drain the system if the pump needs to be cleaned or repaired.

Check valve — should be installed in the discharge pipe.

Plugged tee or capped pipe — should be installed in the suction line to fill the pump and pipe before start-up, especially if the system is not pressurized.

Vibration isolators — should be used in noise-sensitive areas to prevent vibra-tion from being transmitted to the structure.

Relief valve of bypass line — should be installed to allow sufficient water to circulate through the pump to provide adequate cooling and lubrication of the pump's bearings and seals.

2.4 Electrical Hookup

Turn the incoming POWER OFF and make the proper electrical connections according to the diagram on the motor and the latest edition of the National Electrical Code.

Do not start the pump — even to check the direction of rotation — until it has been filled with water. The pump may be seriously damaged if it is run dry.

3. Starting the Pump the First Time

3.1 Prime the Pump

3.1.1. In Closed/Open System Where Water Source is Above the Pump

1. Close the pump isolation valves and open the air vent screw.
2. Gradually open the suction isolation valve until a steady stream of airless water runs out the air vent hole.

Fig. 7

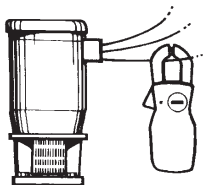

1. Burned contacts on motor starter.
2. Loose terminals in starter/terminal box or possible wire defect.
3. Too high or too low supply voltage.
4. Motor windings are shorted or grounded. Check winding and insulation resistances.
5. Pump is damaged causing a motor overload.

5.1.3 Winding Resistance

5.1.3.1 How to Measure

Turn off power and disconnect the supply power leads in the pump terminal box. Using an ohmmeter, set the scale selector to R x 1 and zero adjust the meter by touching the two ohmmeter leads together.

Touch the leads of the ohmmeter to two motor leads.

Fig. 8

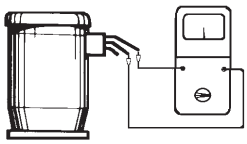

Single phase motors - touching the leads of the ohmmeter to the two outgoing "hot" motor leads (either a single motor lead or combination of leads joined together) will measure the main winding's resistance.

Three phase motors - touching the leads of the ohmmeter to any two hot leads will measure that winding's resistance. Repeat for all three possible lead combinations (L_1 and L_2, L_2 and L_3, L_1 and L_3).

5.1.3.2 Evaluation

If all ohm values are normal, the motor windings are neither shorted nor open.

If any one ohm value is less than normal (-25%), that motor winding may be starting too short. If any one ohm value is greater than normal (+25%), the winding may be starting too open. If some values are high and some are low, the leads may be connected incorrectly, or they may have a break in the insulating jacket.

5.1.4 Insulation Resistance (Lead to Ground)

5.1.4.1 How to Measure

Turn off power and disconnect the supply power leads in the pump terminal box. Using an ohmmeter, set the scale selector to R x 100 and zero adjust the meter by touching the two ohmmeter leads together. Touch one ohmmeter lead to a motor lead and one to ground. Repeat for each lead.

Fig. 9

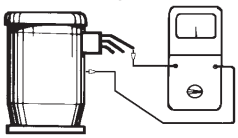

5.1.4.2 Evaluation

The resistance values for new motors must exceed 1,000,000 ohms. If they do not, replace the motor.

4.1.8 Service Conditions

Severity of Service	Ambient Temperature (maximum)	Atmospheric Contamination	Grease Interval (hrs.)	Approved Types of Grease
Standard	104°F (40°C)	Clean, little corrosion	5500	Shell Dolium R
Severe	122°F (50°C)	Moderate dirt, corrosion	2750	Chevron SR#2
Extreme	>122°F (50°C) or class H ins.	Severe dirt, abrasive dust, corrosion	550	Or compatible equivalent grease

If the pump fails to operate or there is a loss of performance, refer to the Troubleshooting section on pages 11 through 14.

4.1.9 Rapid Cycling

Pump cycling should be monitored to make sure the pump is not starting more than 20 times per hour. If it is, premature motor failure is quite likely, due to the increased heat build-up in the motor. Make any adjustments to controls ne-cessary to reduce the frequency of stops and starts.

4.1.10 Freeze Protection

If the pump is installed in an area where freezing could occur, the pump and system should be drained during freezing temperatures to avoid damage.

To drain the pump, close both isolation valves and loosen the suction and dis-charge flanges. Allow water to flow out of the pump before reconnecting the pump to the flanges. Do not tighten the flanges completely until the pump is ready to be used again.

5. Troubleshooting

5.1 Preliminary Checks

5.1.1 Supply Voltage

5.1.1.1 How to Measure

Use a volt meter, (set to the proper scale) measure the voltage at the pump terminal box or starter.

On single-phase units, measure between power leads L1 and L2 (or L1 and N for 115 volt units). On three-phase units, measure between:

- Power leads L1 and L2
- Power leads L2 and L3
- Power leads L3 and L1

Evaluation

When the motor is under load, the voltage should be within ±10% of the nameplate voltage. Larger voltage variation may cause winding damage and indicate a poor electrical supply. The pump should not be operated until these variations have been corrected.

If the voltage constantly remains high or low, the motor should be changed to the correct supply voltage.

Fig. 6

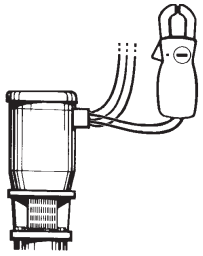

5.1.2 Current Measurement

5.1.2.1 How to Measure

Use an ammeter, (set on the proper scale) to measure the current on each power lead at the terminal box or starter.

Current should be measured when the pump is oper-ating at constant discharge pressure.

5.1.2.2 Evaluation

If the amp draw exceeds the listed service factor amps (SFA) or if the current imbalance is greater than 5% between each leg on three-phase units, check the following:

3. Tighten the air vent screw and completely open the isolation valves.

3.1.2 In Open Systems

1. The suction pipe and pump must be filled and vented of air before starting the pump.
2. Close the discharge side isolation valve and open the air vent screw and suction valve.
3. Fill the suction line through the plugged tee or capped pipe (if one is installed). If not possible, remove one of the gauge tapping plugs in the pump flanges and pour water into the hole using a funnel or hose with an adapter.

Fig. 3

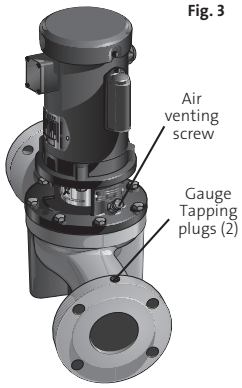

All air in the pump and suction line must be purged before starting the pump.

3.2 Check the Direction of Rotation

a. Switch the POWER OFF.

b. Check to make sure the pump has been filled and vented.

c. Remove the coupling guard and rotate the pump shaft to be certain it turns freely. Replace the coupling guard.

d. Verify that the electrical connections are in accordance with the wiring diagram on the motor.



e. Switch the power on and observe the direction of rotation. When viewed from the motor end, the pump should rotate counter-clockwise.

f. To reverse the direction of rotation, TURN OFF the power supply and complete the following which applies.

- On three-phase motors, interchange any two power leads at the load side of the starter. On single-phase motors, refer to the connection diagram on the motor nameplate. Change the wiring as required.

g. TURN ON the power and again check for proper motor rotation.

3.3 Starting and Adjusting

a. Make sure that:

- The pump has been primed.
- The rotation is counter-clockwise when viewed from the motor end.
- The piping connections are tight and adequately supported.

b. Open the suction line valve completely (if one is installed).

c. Close the isolation valve in the discharge pipe. It should be opened gradually after the pump is turned on. Opening the valve too fast may result in water hammer in the discharge pipe.

d. Start the pump.

e. Gradually open the isolation valve in the discharge piping as explained in step c. Open the valve completely.

f. Check the voltage and amperage at the motor and record them. Adjust the motor overloads if required.

g. If pressure gauges have been installed, check and record the values as the pump operates.

h. Check all controls for proper operation. If the pump is controlled by a pressure switch, check and adjust the cut-in and cut-out pressures. If low-water level controls are used, be sure the low-level switch is properly adjusted so the pump cannot run if the pump breaks suction.

4. Maintenance

4.1 Servicing the Pump Head

4.1.1 Step 1: Remove the Pump Head

1. Turn OFF the power to the motor.
2. Close any isolation valves on either side of the pump.

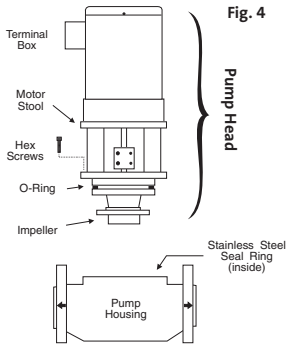

Fig. 4

3. Disconnect the electrical leads and conduit from the terminal box.
4. Loosen and remove the hex bolts connecting the pump head assembly to the pump housing. **Note the position of the motor terminal box relative to the pump housing.**
5. Remove the pump head assembly from the pump housing.
6. Clean the machined surfaces in the pump housing.
7. Inspect the pump housing and stainless steel ring for any damage. Check to be sure the seal ring is mounted securely in the pump housing.
8. Repair or replace parts as needed.

4.1.1.1 Assembly

With the motor/motor stool assembly upside down as shown (fig. 5)

1. Carefully pass the shaft with the rotating shaft seal and impeller through the shaft hole in the motor stool (the seal rings must not be exposed to blows or knocks).
2. Fit the shaft pin in the shaft pin hole.
3. Fit the coupling halves and the coupling allen bolts loosely to the pump and motor shafts so that the gaps on both sides of the coupling halves are even.
4. Insert a screwdriver above the coupling, push the pump shaft towards the motor as far as possible. The pump and motor shaft should touch each other. Tighten coupling allen bolts to the following specifications:

   M6 . . . . . **9.6 ft lbs**

   M8. . . . . **22.6 ft lbs**

5. Clean the recess of the pump housing/ motor stool lubricate o-ring with soapy water if necessary.
6. Fit the pump head in the pump housing with the terminal box in the required position, be careful to align impeller with neck ring.
7. Replace the motor stool bolts and tighten to the following specifications.

   M8. . . . . **18.4 ft lbs**

   M10 . . . . . **34.7 ft lbs**

8. Check the shaft for free rotation and replace the coupling guards.
9. The pump is now completely assembled.

Fig. 5

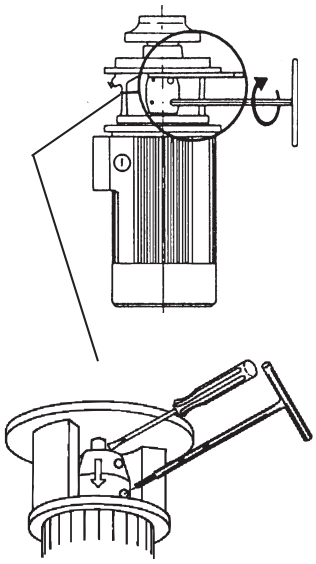

4.1.2 Step 2: Re-Install the Pump Head

1. Lubricate the O-ring with soapy water.
2. With the motor terminal box in the desired position, carefully place the pump head assembly into the pump housing. Be careful not to damage the impeller or mating seal ring. Once the pump head O-ring is engaged with the pump housing, do not attempt to rotate the pump head, since doing so may damage the O-ring.
3. Make sure the pump head assembly is properly seated on the pump housing. DO NOT force the two together.
4. Tighten two of the hex bolts opposite each other until the pump head is secure to the pump housing.
5. Check to make sure the motor shaft turns freely.
6. Insert and tighten the rest of the hex bolts evenly to secure the pump head assembly.

Hex Bolt	Torque
13 mm	19 ft lbs
17 mm.	35 ft lbs

4.1.3 Motor Replacement

If the motor is damaged due to bearing failure, or electrical failure, the following instructions detail how to remove the motor for replacement. It must be emphasized that motors used on VersaFlo TP pumps are specifically selected to our rigid specifications.

Replacement motors must be of the same NEMA frame size, should be equipped with the same or better bearings and have the same service factor. Failure to follow these recommendations may result in premature motor failure.

4.1.3.1 Disassembly

1. Remove the coupling guard screens.
2. Using the proper metric allen wrench, loosen the four cap screws in the coupling, fully remove coupling halves.
3. With the correct size wrench, loosen and remove the four bolts which hold the motor to the discharge section of the pump end.
4. Lift the motor straight up until the shaft is free from the coupling.

4.1.4 Pump Lubrication

Grundfos VersaFlo TP in-line centrifugal pumps installed in accordance with these instructions and sized for correct performance will operate efficiently and provide years of service.

The pumps are lubricated by the fluid they pump, and do not require any additional lubrication. **However, this also means the pump should never be operated for any prolonged periods of time without fluid flowing through the pump.** The motors will require periodic lubrication as noted in the following paragraphs.

4.1.5 Motor Lubrication

Electric motors are prelubricated at the factory and do not require additional lubrication at start-up. Motors without external grease fittings have sealed bearings that cannot be relubricated. Motors with grease fittings should only be lubricated with approved types of grease.

Do not over grease the bearings. Over greasing will cause increased bearing heat and can result in bearing/motor failure. Do not mix petroleum grease and silicon grease in motor bearings.

Bearing Grease will lose its lubricating ability over time, not suddenly. The lubricating ability of the grease (over time) depends primarily on the type of grease, the size of the bearings, the speed at which the bearings operate and the severity of the operating conditions.

Good results can be obtained if the following recommendations are used in your maintenance program.

4.1.6 Lubrication Schedule

For motor frame sizes smaller than 210TC, add 0.3 oz. (8.4g) or 0.6 in. (2 tsp.) at the intervals listed above.

4.1.7 Periodic Safety Checks

At regular intervals depending on the conditions and time of operation, the following checks should be made:

1. Pump meets required performance and is operating smoothly and quietly.
2. There are no leaks, particularly at the shaft seal.
3. The motor is not overheating.
4. Remove and clean all strainers or filters in the system.
5. Verify the tripping of the motor overload protection.
6. Check the operation of all controls. Check unit control cycling twice and adjust if necessary.
7. If the pump is not operated for unusually long periods, the unit should be maintained in accordance with these instructions. In addition, if the pump is not drained, the pump shaft should be manually rotated or run for short periods of time at monthly intervals.

ALPHA2

Variable-speed circulators with Auto$_{ADAPT}$™

Installation and operating instructions

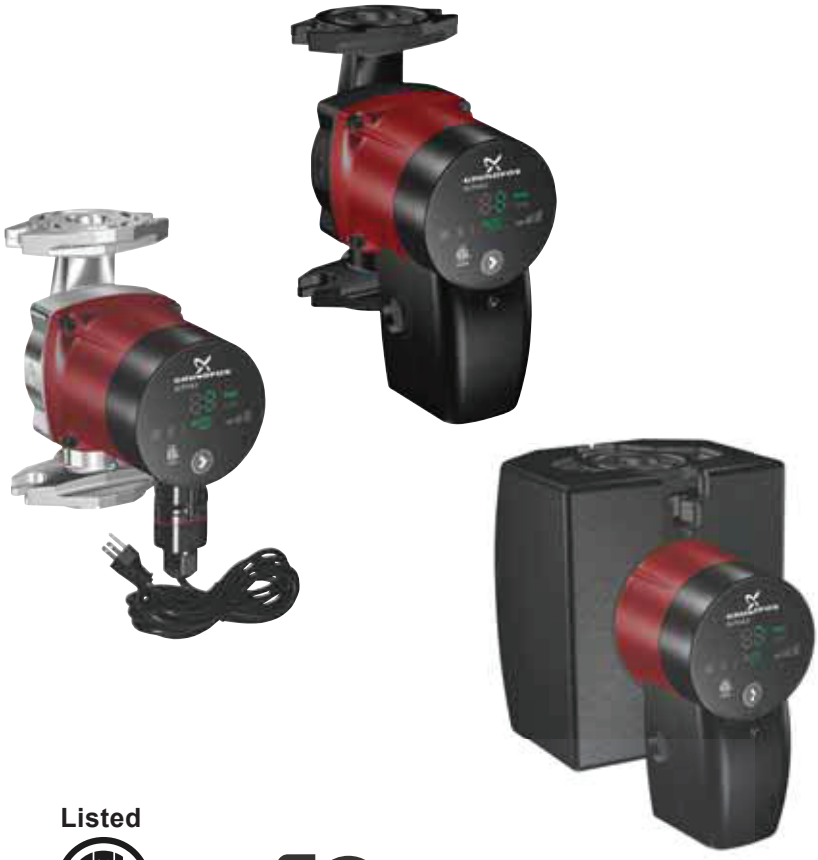

Listed

3191277

Conforms to ANSI/UL Std. 778
Certified to CAN/CSA Std. C22.2 No. 108

be
think
innovate

GRUNDFOS

Table of contents

ALPHA2

English (US)
Installation and operating instructions 3

Français (CA)
Notice d'installation et de fonctionnement 21

Español (MX)
Instrucciones de instalación y operación 39

English (US) Installation and operating instructions

Original installation and operating instructions

These installation and operating instructions describe Grundfos ALPHA2.

Sections 1-5 give the information necessary to be able to unpack, install and start up the product in a safe way.

Sections 6-11 give important information about the product, as well as information on service, fault finding and disposal of the product.

CONTENTS

		Page
1.	**Limited warranty**	**3**
2.	**General information**	**4**
2.1	Symbols used in this document	4
3.	**Receiving the product**	**5**
3.1	Inspecting the product	5
3.2	Scope of delivery	5
4.	**Installing the product**	**5**
4.1	Quick installation tips	6
4.2	Mechanical installation	6
4.3	Changing the power head position	7
4.4	Insulating the pump housing	8
4.5	Electrical connection	9
5.	**Starting up the product**	**11**
5.1	Venting the pump	11
5.2	First startup	11
6.	**Product introduction**	**11**
6.1	Product description	11
6.2	Applications	11
6.3	Pumped liquids	12
7.	**Identification**	**13**
7.1	Nameplate	13
7.2	Type key	13
7.3	Approvals	13
8.	**Control functions**	**14**
8.1	Elements on the control panel	14
8.2	Display	14
8.3	Setting the pump	14
8.4	Selection of control mode by application	14
8.5	Pump control	15
8.6	Pump performance and operating mode selection	16
9.	**Fault finding the product**	**17**
10.	**Technical data**	**19**
10.1	Operating conditions	19
11.	**Disposing of the product**	**20**



Prior to installation, read this document. Installation and operation must comply with local regulations and accepted codes of good practice.



This appliance can be used by children aged from 8 years and above and persons with reduced physical, sensory or mental capabilities or lack of experience and knowledge if they have been given supervision or instruction concerning the use of the appliance in a safe way and understand the hazards involved. Children must not use or play with the appliance. Cleaning and user maintenance shall not be made by children without supervision.



Successful operation depends on careful attention to the procedures described in this manual. Keep this manual for future use.

1. Limited warranty

New equipment manufactured by the seller or service supplied by the seller is warranted to be free from defects in material and workmanship under normal use and service for a minimum of twelve (12) months from the date of installation, eighteen (18) months from the date of shipment, unless otherwise stated in the product warranty guide (available upon request). In the case of spare or replacement parts manufactured by the seller, the warranty period shall be twelve months from shipment. The seller's obligation under this warranty is limited to repairing or replacing, at its option, any part found to its satisfaction to be defective, provided that such part is, upon request, returned to the seller's factory from which it was shipped, transportation prepaid. Parts replaced under the warranty shall be warranted for twelve months from the date of the repair, not to exceed the original warranty period. This warranty does not cover damage to parts resulting from decomposition from chemical action or wear caused by abrasive materials, nor does it cover damage resulting from misuse, accident, neglect, or from improper operation, maintenance, installation, modification or adjustment. This warranty does not cover parts repaired outside the seller's factory without prior written approval. The seller makes no warranty as to starting equipment, electrical apparatus or other material not of its manufacture. If the purchaser or any other party repairs, replaces or adjusts equipment or parts without the seller's prior written approval, the seller is relieved of any further obligation to the purchaser under this paragraph with respect to such equipment or parts, unless such repair, replacement or adjustment was made after the seller, within a reasonable time, failed to satisfy

his obligations under this paragraph. The seller's liability for breach of these warranties (or for breach of any other warranties found by a competent court to have been given by the seller) shall be limited to: (a) accepting return of such equipment exw plant of manufacture, and (b) refunding any amount paid thereon by the purchaser (less depreciation at a rate of 15 % per year if the purchaser has used the equipment for more than thirty [30] days), and canceling any balance still owing on the equipment, or (c) in the case of service, at the seller's option, redoing the service, or refunding the purchase order amount of the service or a portion thereof upon which such liability is based. These warranties are expressly in lieu of any other warranties, express or implied, and the seller specifically disclaims any implied warranty of merchantability or fitness for a particular purpose, and in lieu of any other obligation or liability on the part of the seller, whether a claim is based upon negligence, breach of warranty or any other theory or cause of action. In no event shall the seller be liable for consequential, incidental, indirect, special or punitive damages of any kind. For the purposes of this paragraph, the equipment warranted shall not include equipment, parts and work not manufactured or performed by the seller. With respect to such equipment, parts or work, the seller's only obligation shall be to assign to the purchaser the warranties provided to the seller by the manufacturer or supplier providing such equipment, parts or work. No equipment furnished by the seller shall be deemed to be defective by reason of normal wear and tear, failure to resist erosive or corrosive action of any fluid or gas, the purchaser's failure to properly store, install, operate or maintain the equipment in accordance with good industry practices or specific recommendations of the seller, including, but not limited to the seller's installation and operation manuals, or the purchaser's failure to provide complete and accurate information to the seller concerning the operational application of the equipment.

2. General information

2.1 Symbols used in this document



DANGER

Indicates a hazardous situation which, if not avoided, will result in death or serious personal injury.



WARNING

Indicates a hazardous situation which, if not avoided, could result in death or serious personal injury.



CAUTION

Indicates a hazardous situation which, if not avoided, could result in minor or moderate personal injury.

The text accompanying the three hazard symbols DANGER, WARNING and CAUTION will be structured in the following way:



SIGNAL WORD

Description of hazard

Consequence of ignoring the warning.

- Action to avoid the hazard.

Example

DANGER



Electric shock

Death or serious personal injury.

- Switch off the power supply before starting any work on the product. Make sure that the power supply cannot be accidentally switched on.



A blue or grey circle with a white graphical symbol indicates that an action must be taken to avoid a hazard.



A red or grey circle with a diagonal bar, possibly with a black graphical symbol, indicates that an action must not be taken or must be stopped.



If these instructions are not observed, it may result in malfunction or damage to the equipment.



Notes or instructions that make the work easier and ensure safe operation.

3. Receiving the product

3.1 Inspecting the product

Check that the product received is in accordance with the order.

Check that the voltage and frequency of the product match voltage and frequency of the installation site. See section *7. Identification* for information on the nameplate.

3.2 Scope of delivery

The box contains the following items:

- one Grundfos ALPHA2 pump
- one insulation shell
- one line cord or terminal box
- two gaskets
- installation and operating instructions
- one check valve
- one "Check Valve Installed" sticker.

4. Installing the product

WARNING

Pressurized system



Death or serious personal injury.

- Before dismantling the pump, drain the system or close the isolating valve on either side of the pump before the screws are removed. The pumped liquid may be scalding hot and under high pressure.

DANGER

Electric shock



Death or serious personal injury.

- Switch off the power supply before starting any work on the product. Make sure that the power supply cannot be accidentally switched on.

DANGER

Electric shock



Death or serious personal injury.

- This pump has not been investigated for use in swimming pool or marine areas.

4.1 Quick installation tips

1. To ensure proper air venting of your system, place the pump in "Fixed Speed III" mode until all air has been removed. Isolating zones during this process will ensure proper air removal.
2. For balancing manifold zone(s) applications, utilizing "Constant Pressure mode 1 or 2" and only one zone at a time during balancing will ensure proper flow rate to each zone.
3. Always review your boiler minimum flow rate requirements if utilizing the pump as a primary pump. Select one of the fixed speed modes for boiler primary pump applications.
4. In general, for maximum energy savings and comfort level, start with the AUTO$_{ADAPT}$™ mode.
5. You may change hydraulic selection while pumping. No permanent damage will occur. In fact, Grundfos encourages testing the various hydraulic modes with your hydronic system to ensure maximum energy savings and comfort level.
6. With zone panel control applications, when there is a call for heat and power has been sent to the pump, the pump will remember and restart from the last duty point and hydraulic mode.

4.2 Mechanical installation

When making pipe connections, follow the piping manufacturer's recommendations and all code requirements for the piping material.

- Flush the system of debris before installation.
- Insert the check valve if required. See fig. 1.
- Refer to the arrows on the pump housing indicating the direction of the liquid flow through the pump.
- Install the pump with horizontal motor shaft. See fig. 2.
- Fit the two gaskets supplied to the pump ends.

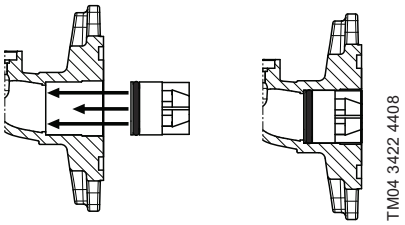

Fig. 1 Check valve installation

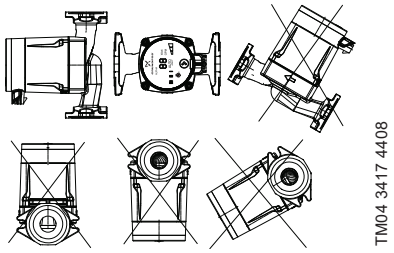

Fig. 2 Installation positions

4.3 Changing the power head position

CAUTION

Hot surface
Minor or moderate personal injury.
- Position the pump so that persons cannot accidentally come into contact with hot surfaces.

DANGER

Electric shock
Death or serious personal injury.
- Switch off the power supply before starting any work on the product. Make sure that the power supply cannot be accidentally switched on.

WARNING

Pressurized system
Death or serious personal injury.
- Before dismantling the pump, drain the system or close the isolating valve on either side of the pump before you remove the screws. The pumped liquid may be scalding hot and under high pressure.

If you change the position of the power head, fill the system with the liquid to be pumped or open the isolating valves.

- Make any change to the power head orientation before filling the system with liquid. You can turn the power head in steps of 90 °.
- See fig. 3 for permissible positions.
- Only use orientations C and D for CSA, enclosure type 2.

Proceed as follows:

1. If liquid is present, drain the liquid from the pump or isolate the liquid from the pump.
2. Remove the four socket head cap screws.
3. Turn the pump head to the desired position. See fig. 3.
4. Cross-tighten the screws to: 7 ft-lbs torque.

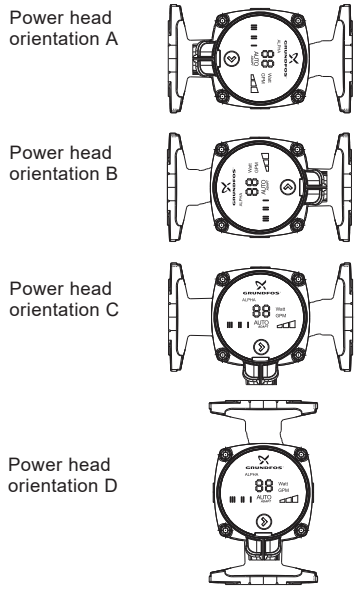

Fig. 3 Changing the power head position

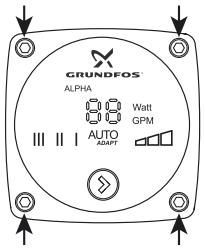

Fig. 4 Remove the four socket head cap screws on the power head to change the power head position

4.4 Insulating the pump housing



TM06 7711 3816

Fig. 5 Insulating the pump housing

Limit the heat loss from the pump housing and pipes.

Do not insulate the control box or cover the control panel.

You can reduce the heat loss from the pump and pipes by insulating the pump housing and the pipes. See figures 5 and 6.

- Insulating shells for pumps in heating systems are supplied with the pump. See fig. 6.
- For pumps in air-conditioning and cooling systems (down to +14 °F (-10 °C)), it is required to apply a silicon sealant to the internal contours of the shell in order to eliminate any air gaps and prevent condensation between the insulating shell and pump housing. Alternatively, you can insulate the pump manually in accordance with standard insulating requirements for heating and cooling systems.
- The fitting of insulating shells will increase the pump dimensions.



TM06 7589 4716

TM06 7588 3516

Fig. 6 Fitting insulating shells to the pump

4.5 Electrical connection

DANGER

Electric shock

Death or serious personal injury.

- All electrical work must be carried out by a qualified electrician in accordance with the latest edition of the National Electric Code and state, local codes and regulations.

DANGER

Electric shock

Death or serious personal injury.

- Switch off the power supply before starting any work on the product. Make sure that the power supply cannot accidentally switched on.

DANGER

Electric shock

Death or serious personal injury.

- This pump has not been investigated for use in swimming pool or marine areas.

DANGER

Electric shock

Death or serious personal injury.

- This pump is supplied with a grounding conductor and grounding-type attachment plug. To reduce the risk of electric shock, be certain that it is connected only to a properly grounded, grounding-type receptacle in accordance with the National Electric Code and any state, local governing codes and regulations.

- The motor is protected by the electronics in the control box and requires no external motor protection.
- Check that the supply voltage and frequency correspond to the values stated on the pump.
- Only connect the pump to the power supply with the line cord or through the terminal box supplied with the pump; see sections *4.5.1 For pump models with line cord* and *4.5.2 For pump models with terminal box*.
- Do not modify and only use the line cord supplied.
- The lights on the control panel indicate that the electrical supply has been switched on.

4.5.1 For pump models with line cord

Follow the procedure as shown in fig. 7.

How to insert the line cord plug onto the pump (side view):

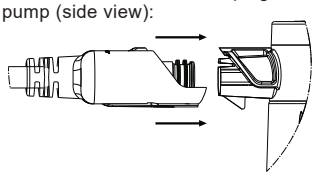

How to remove the cord plug from the pump (bottom view):

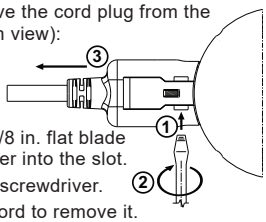

1. Insert a 1/8 in. flat blade screwdriver into the slot.
2. Twist the screwdriver.
3. Pull the cord to remove it.

TM04 3420 1010

Fig. 7 Connecting and removing the power plug for line cord models

4.5.2 For pump models with terminal box

1. Loosen the terminal box screw from the terminal box cover.
2. Utilize either conduit port for the wiring entrance.
3. Wirethe plug connector as illustrated in the section *Wiring procedure* below, steps 3a-3d. Then complete steps 4-7.

Be sure to connect the ground cable conductor (green) of the pump to the ground cable conductor of the power supply.

Wiring procedure

Step	Action	Illustration
3a	Strip the ends of the cable conductors as illustrated.	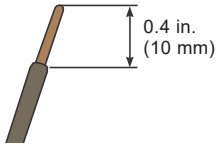 TM06 8250 4816
3b	Align the end of each of the pump's cable conductors, including any frayed strands, with the end of the corresponding cable conductor from the power supply. Green conductor: ground Black conductor: line White conductor: neutral	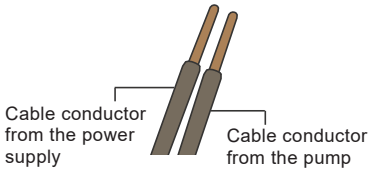 TM06 8253 4816
3c	Insert the ends of the cable conductors into the connector. Push the cable conductors fully into the connector.	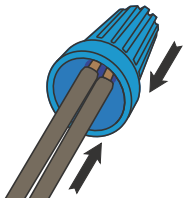 TM06 8251 4816
3-d	Twist the connector until you see two twists in the cable conductors.	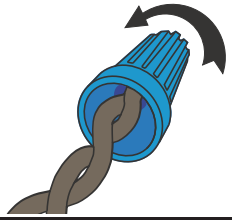 TM06 8252 4816

4. Slide the terminal box cover over the terminal box body.
5. Tighten the cross-head screw on the terminal box to 5 in-lbs.
6. Switch on the power supply.
7. The lights on the control panel will then indicate that the power supply has been switched on.

5. Starting up the product

Do not start the pump until the system has been filled with liquid and vented.

The required minimum inlet pressure must be available at the pump inlet.

5.1 Venting the pump

The pump is self-venting. It need not be vented before startup.

The pump must not run dry.

Air in the pump may cause noise. This noise ceases after a few minutes running.

You obtain quick venting of the pump by setting the pump to speed III for a short period. How fast the pump is vented depends on the system size and design.

When you have vented the pump, i.e. when the noise has ceased, set the pump according to the recommendations. See section *8.3 Setting the pump*.

You cannot vent the system through the pump.

5.2 First startup

- The light in the control panel shows that the power supply has been switched on. See fig. 9.
- Factory setting: $AUTO_{ADAPT}$.

6. Product introduction

6.1 Product description

The ALPHA2 circulator pump incorporates a permanent-magnet motor and differential-pressure control enabling continuous adjustment of the pump performance to the actual system requirements.

The pump has a user-friendly front-mounted control panel. See sections *7. Identification* and *8. Control functions*.

When you install an ALPHA2, it means:

- Easy installation and start-up.
  - The pump is easy to install. Thanks to the $AUTO_{ADAPT}$ function (factory setting), you can start the pump, in most cases, without making any settings.
- High degree of comfort.
- Minimum noise from valves, etc.
- Low energy consumption.
  - Low energy consumption compared to conventional circulator pumps.

6.2 Applications

DANGER

Explosion hazard

Death or serious personal injury.

- Do not use the pump for transfer of flammable liquids such as diesel oil, gasoline, and similar liquids.

DANGER

Electric shock

Death or serious personal injury.

- This pump has not been investigated for use in swimming pool or marine areas.

The ALPHA2 circulator pump is designed for the circulation of water in heating systems, domestic hot-water systems as well as air-conditioning and cold-water systems.

Cold-water systems are defined as systems where the ambient temperature is higher than the temperature of the pumped liquid.

The pump is the best choice for the following systems:

- underfloor heating systems
- one-pipe systems
- two-pipe systems.

The pump is suitable for the following:

- systems with constant or variable flows where you want to optimize the setting of the pump duty point.
- systems with variable flow-pipe temperature.
- balancing of domestic heating systems.

6.3 Pumped liquids

For information about pressures and temperatures, see section *10. Technical data*.

CAUTION



Flammable material

Minor or moderate personal injury.

- Do not use the pump for flammable liquids, such as diesel oil and petrol.

WARNING



Biological hazard

Death or serious personal injury.

- In domestic hot-water systems, the temperature of the pumped liquid must always be above 122 °F (50 °C) due to the risk of legionella.

WARNING



Biological hazard

Death or serious personal injury.

- In domestic hot-water systems, the pump is permanently connected to the mains water. Therefore, do not connect the pump by a hose.

CAUTION



Corrosive substance

Minor or moderate personal injury.

- Do not use the pump for aggressive liquids, such as acids and seawater.

In heating systems, the water must meet the requirements of accepted standards on water quality in heating systems.

The pump is suitable for the following liquids:

- Thin, clean, non-aggressive and non-explosive liquids, not containing solid particles or fibers.
- Cooling liquids, not containing mineral oil.
- Domestic hot water
  Maximum: 14 °dH
  Maximum: 149 °F (65 °C)
  Maximum peak: 158 °F (70 °C).
  For water with a higher degree of hardness, contact Grundfos.
- Softened water.

The kinematic viscosity of water is 1 mm^2/s (1 cSt) at 68 °F (20 °C). If the pump is used for a liquid with a higher viscosity, the hydraulic performance of the pump will be reduced.

Example: 50 % glycol at 68 °F (20 °C) means a viscosity of approximately 10 mm^2/s (10 cSt) and a reduction of the pump performance by approximately 15 %.

Do not use additives that can or will disturb the functionality of the pump.

When selecting a pump, take the viscosity of the pumped liquid into consideration.

For technical data, see section *10. Technical data*.

6.3.1 Glycol

The pump is designed for pumping clean water, or up to 50/50 mixtures by weight of glycol and water.

For glycol usage as well as additional liquid information, see section *10. Technical data*.

To prevent the glycol mixture from degrading, avoid temperatures exceeding the rated liquid temperature and minimize the operating time at high temperatures.

It is important to clean and flush the system before adding the glycol mixture.

To prevent corrosion or precipitation, check the glycol mixture and maintain it regularly. If further dilution of the supplied glycol is required, follow the glycol supplier's instructions.

7. Identification

7.1 Nameplate

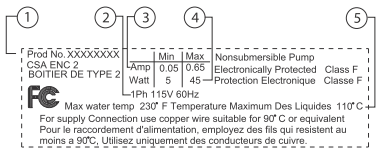

TM04 3419 3516

Fig. 8 Nameplate

Pos.	Description
1	Product number
2	Voltage [V]
3	Rated current [A]: • Min.: Minimum current [A] • Max.: Maximum current [A]
4	Input power [W]: • Min.: Minimum power [W] • Max.: Maximum power [W]
5	Maximum fluid temperature [°F]

7.2 Type key

Example	ALPHA2	15	-55	-	165
Pump type					
Nominal diameter (DN) of inlet and outlet ports [mm]					
Maximum head [dm]					
: Cast-iron pump housing N: Stainless-steel pump housing					
Port-to-port length [mm]					

7.3 Approvals

Listed

Intertek
3191277

FCC sections

Section 15.19 (a) 3

This device complies with Part 15 of the FCC Rules. Operation is subject to the following two conditions: (1) this device may not cause harmful interference, and (2) this device must accept any interference received, including interference that may cause undesired operation.

Section 15.21

Any changes or modifications to this equipment not expressly approved by the party responsible for compliance could void the user's authority to operate this equipment void.

Section 15.105 (b)

This equipment has been tested and found to comply with the limits for a class B digital device, pursuant to Part 15 of the FCC Rules.

These limits are designed to provide reasonable protection against harmful interference in a residential installation. This equipment generates, uses and can radiate radio frequency energy and, if not installed and used in accordance with the instructions, may cause harmful interference to radio communications. However, there is no guarantee that interference will not occur in a particular installation. If this equipment does cause harmful interference to radio or television reception, which can be determined by turning the equipment off and on, the user is encouraged to try to correct the interference by one or more of the following measures:

- Reorient or relocate the receiving antenna.
- Increase the separation between the equipment and receiver.
- Connect the equipment to an outlet on a circuit different from that to which the receiver is connected.
- Consult the dealer or an experienced radio/ TV technician for help.

Canadian EMC Standard: ICES-003

This class B digital apparatus complies with Canadian ICES-003.

8. Control functions

8.1 Elements on the control panel

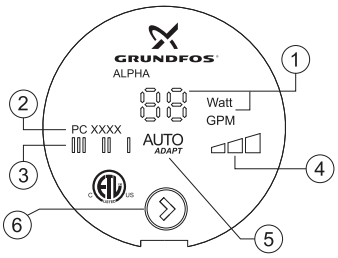

TM04 3421 3511

Fig. 9 Control panel

Pos.	Description
1	Display showing the power consumption in watt or the flow.
	Light field indicating high and low flow
2	Production code:
	• 1st and 2nd figures: year
	• 3rd and 4th figures: week
3	Light field indicating fixed speed
4	Light field indicating constant pressure
5	Light field indicating AUTO$_{ADAPT}$
6	Push-button for selection of pump setting

8.2 Display

The display (1) is on when you have switched on the power supply.

The display shows the actual pump power consumption in watt (integer) or the actual flow during operation.

If a fault is indicated, correct the fault and reset the pump by switching the power supply off and on.

If the pump impeller is rotated, for example when filling the pump with water, sufficient energy can be generated to light up the display even if the power supply has been switched off.

Light field indicating high and low flow

- The light field blinks for low flow
  - – If the flow is lower than 1 gpm, the light field alternately flashes between "0" and "1" randomly.
- The light field shows HI for high flow
  - – If the flow is higher than 12 gpm, the light field shows "HI" on user interface.

8.2.1 Light fields indicating the pump setting

The pump has optional performance settings which you can select with the push-button. See fig. 9.

The pump setting is indicated by light fields in the display. See fig. 10.



TM06 7517 3516

Fig. 10 Light fields

For more information about the function of the settings, see section *9. Fault finding the product*.

8.3 Setting the pump

You can change the pump setting by pressing the push-button.

8.3.1 Factory default setting

The pump's factory default setting is the AUTO$_{ADAPT}$ setting.

8.3.2 Changing from recommended to alternative pump setting

Heating systems are "slow" systems that cannot be set to the optimum operation within minutes or hours.

However, if the recommended pump setting in some applications does not give the desired distribution of heat in the rooms of the house, you can change to an alternative pump setting.

8.4 Selection of control mode by application

Application	Control mode
Floor heating	Constant pressure
Two-pipe system	AUTO$_{ADAPT}$
Ventilation	Speed 1, 2 or 3
Boiler-shunt	Speed 1, 2 or 3
One-pipe system	Speed 1, 2 or 3 or constant pressure
Domestic hot water	Speed 1, 2 or 3

See also sections *8. Control functions* and *8.6 Pump performance and operating mode selection*.

8.5 Pump control

See section *8.6 Pump performance and operating mode selection*.

AUTO$_{ADAPT}$, underfloor heating and two-pipe heating systems

The AUTO$_{ADAPT}$ function adjusts the pump performance to the actual heat demand in the system. As the performance is adjusted gradually, we recommend that you leave the pump in the AUTO$_{ADAPT}$ mode at least one week before changing the pump setting.

If you choose to change back to AUTO$_{ADAPT}$, the pump remembers its last setpoint in AUTO$_{ADAPT}$ and resumes the automatic adjustment of the performance.

Constant-pressure control

In this control mode, a constant differential pressure across the pump is maintained, irrespective of the flow.

See also sections *8. Control functions* and *8.3 Setting the pump*.

Constant speed control (III, II, or I)

In this control mode, the pump runs at a constant speed and consequently on a constant curve.

- In speed III, the pump is set on the maximum curve under all operating conditions. You can quickly vent the pump by setting the pump to speed III for a short period.
- In speed II, the pump is set on the medium curve under all operating conditions.
- In speed I, the pump is set on the minimum curve under all operating conditions.

Manual summer mode

In manual summer mode, the pump is stopped to save energy and only the electronics are running. To avoid lime deposit that could block the pump, the pump is started every 24 hours for two minutes at a low speed. This is an alternative to shutting down the pump if there is a risk of lime deposit.

The display is turned off. If any faults occur during manual summer mode, the display will show the faults when the pump is taken out of manual summer mode.

If any alarms occur during manual summer mode, no alarms will be shown. When manual summer mode is deactivated again, only the actual alarms will be displayed.

- To activate manual summer mode, press and hold the push-button for three seconds. All light fields will turn off, and the pump will stop. The AUTO$_{ADAPT}$ light field will flash for four seconds.
- To deactivate manual summer mode, press the push-button to return to normal operation.

8.6 Pump performance and operating mode selection

The hydraulic performance shown is without check valve.

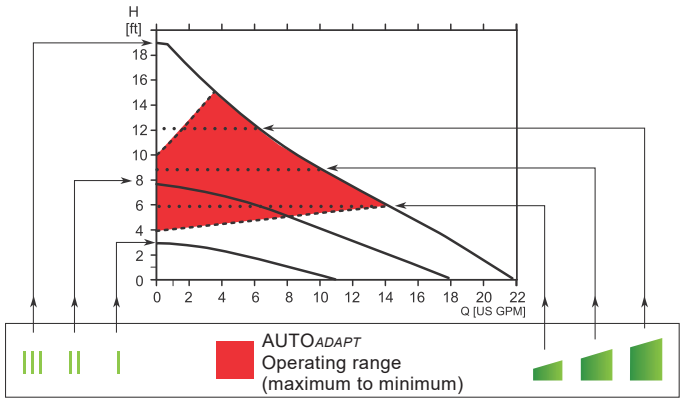

TM06 7506 3516

Pos.	Description
	• Push-button for selection of pump setting • Every time you press the push-button, the circulator setting is changed.
III	**High constant speed** • The pump runs at a constant speed and consequently on a constant curve. In speed III, the pump is set on the maximum curve under all operating conditions. You obtain quick vent of the pump by setting the pump to speed III for a short period.
II	**Medium constant speed** • The pump runs at a constant speed and consequently on a constant curve. In speed II, the pump is set on the medium curve under all operating conditions.
I	**Low constant speed** • The pump runs at a constant speed and consequently on a constant curve. In speed I, the pump is set on the minimum curve under all operating conditions.
	Constant pressure I • The duty point of the pump will move left and right along the lowest constant-pressure curve depending on the water demand in the system. The head is kept constant, irrespective of the water demand.
	Constant pressure II • The duty point of the pump will move left and right along the middle constant-pressure curve depending on the water demand in the system. The head is kept constant, irrespective of the water demand.
	Constant pressure III • The duty point of the pump will move left and right along the highest constant-pressure curve depending on the water demand in the system. The head is kept constant, irrespective of the water demand.
AUTO ADAPT	**AUTO$_{ADAPT}$ (factory setting)** • This function controls the pump performance automatically within the defined performance range (shaded area). AUTO$_{ADAPT}$ will adjust the pump performance to system demands over time.
(Hold for 3 sec.)	**Manual summer mode** The pump is stopped to save energy, and only the electronics are running. To avoid liming and blocking of the pump, the pump is started every 24 hours for two minutes at a low speed.

9. Fault finding the product

DANGER

Electric shock



Death or serious personal injury.

- Switch off the power supply before starting any work on the product. Make sure that the power supply cannot be accidentally be switched on.

WARNING

Pressurized system



Death or serious personal injury.

- Before dismantling the pump, drain the system or close the isolating valve on either side of the pump before the screws are removed. The pumped liquid may be scalding hot and under high pressure.

Fault		Control panel			Remedy
1.	The pump does not run.	Light field is off.	a)	The pump is not connected to the power supply.	Connect the pump to the power supply.
			b)	The circuit breaker has tripped.	Cut in the circuit breaker.
			c)	The pump is defective.	Replace the pump.
		Light field is on.	a)	Supply voltage is too high.	Check that the power supply falls within the specified range.
			b)	The rotor is blocked by impurities.	Remove the impurities.
		"▬▬ ▬▬"	a)	Supply voltage is too low.	Switch the power off and on. Check for air, locked rotor and/or voltage. Correct the power supply.
2.	Noise in the system	Light field is on.	a)	There is air in the system.	Install an air eliminator.
			b)	The flow is too high.	Reduce the pump speed.
			c)	Thermal expansion of system components.	Check the mounting brackets for the pipes. Secure loose mounting brackets.
3.	Noise in the pump	Light field is on.	a)	There is air in the pump.	Let the pump run, as it will vent over time. Install an air eliminator.
			b)	The inlet pressure is too low.	Increase the inlet pressure. Check the air volume in the expansion tank, if this is installed. (Pressure leaks in the system can lead to cavitation.)
			c)	No liquid (dry running).	Ensure the system has been filled with liquid and vented. Open the isolating valves.
			d)	The pump is defective.	Replace the pump.

Fault	Control panel		Remedy
4. Insufficient heat	Light field is on.	a) The pump performance is set too low.	Increase the pump speed or constant pressure.
		b) The thermostat is set too low or is not working.	Check to see if the circulator is in the proper operating mode. Check the thermostat to ensure that it is set to the desired temperature and is working. Replace the batteries in the thermostat.
		c) Air or gas in the system.	Vent the air or gas from the system by allowing the pump to run, as it will vent over time. Install an air eliminator. If necessary rework the piping.
		d) The valves are sticking.	Make sure all valves are in good working order, i.e. remove lime deposits.
		e) Wrong direction of flow.	See the direction of flow arrow marked on the pump. Reinstall the pump to correct the direction of flow.
		f) The boiler is not working properly.	Check the water temperature from the boiler and check the boiler functions. Repair the boiler if required.
		g) The pump performance is not adequate for the application.	Check for proper sizing of the circulator and other system components.
		h) The pump performance is not adequate for the application.	Check the ΔT calculation.

10. Technical data

10.1 Operating conditions

Supply voltage

1 x 115 V, + 10 %/- 10 %, 60 Hz.

Motor protection

The pump requires no external motor protection.

Enclosure class

Indoor use only, IP42.

CSA enclosure type 2.

Insulation class

F.

Relative humidity

Maximum 95 %.

Maximum outlet pressure

150 psi (10.34 bar).

Inlet pressure

Liquid temperature	Minimum inlet pressure
167 °F (75 °C)	0.75 psi (0.05 bar)
194 °F (90 °C)	4.06 psi (0.28 bar)
230 °F (110 °C)	15.7 psi (1.08 bar)

Sound pressure level

43 dB (A).

Ambient temperature

32 °F (0 °C) to 104 °F (40 °C).

Liquid temperature

36 °F (2 °C) to 230 °F (110 °C).

To avoid condensation in the control box and stator, the liquid temperature must always be higher than the ambient temperature.

Ambient temperature [°F (°C)]	Liquid temperature	
	Minimum [°F (°C)]	Maximum [°F (°C)]
32 °F (0 °C)	36 °F (2 °C)	230 °F (110 °C)
50 °F (10 °C)	50 °F (10 °C)	230 °F (110 °C)
68 °F (20 °C)	68 °F (20 °C)	230 °F (110 °C)
86 °F (30 °C)	86 °F (30 °C)	230 °F (110 °C)
95 °F (35 °C)	95 °F (35 °C)	194 °F (90 °C)
104 °F (40 °C)	104 °F (40 °C)	158 °F (70 °C)

In domestic hot water systems, keep the liquid temperature below 149 °F (65 °C) to eliminate the risk of lime precipitation.

Glycol

Maximum glycol concentrations with clean water:

50 % glycol @ 36 °F (2 °C).

Hydraulic performance change can be expected.

Watt readings

Accuracy: ± 1 watt.

Flow indicator

Provides a relative indication of flow – should not be used in lieu of a flow meter.

Check valve

Use of a check valve may reduce pump hydraulic performance (up to - 10 %).

Use a check valve in parallel pumping applications.

Curve conditions

Test liquid: Airless water.

Curves apply to a density of 983.2 kg/m^3 and a liquid temperature of 140 °F (60 °C).

All curves show average values and should not be used as guarantee curves. If a specific minimum performance is required, individual measurements must be made.

Curves apply to a kinematic viscosity of 0.474 cSt.

Approximate power usage

Speed setting		Minimum	Maximum
High constant speed	III	39 W	45 W
Medium constant speed	II	15 W	30 W
Low constant speed	I	5 W	8 W
Constant pressure		8 W	45 W
Constant pressure		14 W	45 W
Constant pressure		22 W	45 W
AUTO$_{ADAPT}$		5 W	45 W

11. Disposing of the product

This product or parts of it must be disposed of in an environmentally sound way:

1. Use the public or private waste collection service.
2. If this is not possible, contact the nearest Grundfos company or service workshop.

Subject to alterations.

GRUNDFOS **INSTRUCTIONS**

UPS Series 200

Circulator pumps

Installation and operating instructions



UPS Series 200

Table of contents

English (US)
Installation and operating instructions 4

Español (MX)
Instrucciones de instalación y funcionamiento. 21

Français (CA)
Notice d'installation et de fonctionnement 39

CONTENTS

		Page
1.	**Limited warranty**	**4**
2.	**Introduction**	**5**
2.1	Safety warning	5
3.	**Pre-installation checklist**	**5**
3.1	Confirm you have the correct pump	5
3.2	Check the condition of the pump	5
3.3	Verify electrical requirements	5
3.4	Pumped liquid requirements	6
4.	**Installation procedures**	**7**
4.1	Electrical preparation	7
4.2	Piping considerations	7
4.3	Connect the pump	8
4.4	Electrical connection	8
5.	**Starting the pump**	**10**
5.1	Vent the piping system	10
5.2	Check the direction of shaft rotation	10
5.3	Speed selection	11
6.	**Troubleshooting**	**13**
6.1	Fault finding chart	13
6.2	Preliminary checks	14
6.3	Current measurement	15
6.4	Insulation resistance (lead-to-ground)	15
6.5	Winding resistance (line-to-line)	15
6.6	Winding resistance chart	17
7.	**Replacing components**	**19**
7.1	Removing the pump head	19
7.2	Fitting the pump head	19
7.3	Replacing the terminal box or capacitor	20
8.	**Disposal**	**20**

Warning

Prior to installation, read these installation and operating instructions. Installation and operation must comply with local regulations and accepted codes of good practice.

This booklet should be left with the owner of the pump for future reference and information regarding its operation.

1. Limited warranty

Products manufactured by GRUNDFOS PUMPS CORPORATION (Grundfos) are warranted to the original user only to be free of defects in material and workmanship for a period of 18 months from date of installation, but not more than 24 months from date of manufacture. Grundfos' liability under this warranty shall be limited to repairing or replacing at Grundfos' option, without charge, F.O.B. Grundfos' factory or authorized service station, any product of Grundfos' manufacture. Grundfos will not be liable for any costs of removal, installation, transportation, or any other charges which may arise in connection with a warranty claim. Products which are sold but not manufactured by Grundfos are subject to the warranty provided by the manufacturer of said products and not by Grundfos' warranty. Grundfos will not be liable for damage or wear to products caused by abnormal operating conditions, accident, abuse, misuse, unauthorized alteration or repair, or if the product was not installed in accordance with Grundfos' printed installation and operating instructions.

To obtain service under this warranty, the defective product must be returned to the distributor or dealer of Grundfos' products from which it was purchased together with proof of purchase and installation date, failure date, and supporting installation data. Unless otherwise provided, the distributor or dealer will contact Grundfos or an authorized service station for instructions.

Any defective product to be returned to Grundfos or a service station must be sent freight prepaid; documentation supporting the warranty claim and/or a Return Material Authorization must be included if so instructed.

GRUNDFOS WILL NOT BE LIABLE FOR ANY INCIDENTAL OR CONSEQUENTIAL DAMAGES, LOSSES, OR EXPENSES ARISING FROM INSTALLATION, USE, OR ANY OTHER CAUSES. THERE ARE NO EXPRESS OR IMPLIED WARRANTIES, INCLUDING MERCHANTABILITY OR FITNESS FOR A PARTICULAR PURPOSE, WHICH EXTEND BEYOND THOSE WARRANTIES DESCRIBED OR REFERRED TO ABOVE.

Some jurisdictions do not allow the exclusion or limitation of incidental or consequential damages and some jurisdictions do not allow limit actions on how long implied warranties may last. Therefore, the above limitations or exclusions may not apply to you. This warranty gives you specific legal rights and you may also have other rights which vary from jurisdiction to jurisdiction.

2. Introduction

2.1 Safety warning

2.1.1 Read this booklet

This booklet is designed to help a certified installer install, begin operation of and troubleshoot the Grundfos UPS pumps.
The booklet should be left with the owner of the pump for future reference and information regarding its operation. Should the owner experience any problems with the pump, a certified professional should be contacted.

2.1.2 Electrical work

Warning



All electrical work should be performed by a qualified electrician in accordance with the latest edition of the National Electrical Code, local codes and regulations.

Warning



A faulty motor or wiring can cause electrical shock that could be fatal, whether touched directly or conducted through standing water. For this reason, proper grounding of the pump to the power supply's grounding terminal is required for safe installation and operation.

In all installations, the above-ground metal plumbing should be connected to the power supply ground as described in Article 250-80 of the National Electrical Code.

3. Pre-installation checklist

3.1 Confirm you have the correct pump

- Read the pump nameplate to make sure it is the one you ordered.
- Compare the pump's nameplate data and its performance curve (for head, gpm, etc.) with the application in which you plan to install it.
- Will the pump do what you expect it to do?

3.2 Check the condition of the pump

The shipping carton your pump came in is specially designed around your pump during production to prevent damage.

As a precaution, it should remain in the carton until you are ready to install it. At that point, look at the pump and examine it for any damage that may have occurred during shipping.

Examine any other parts of the shipment as well for any visible damage.

3.3 Verify electrical requirements

Verification of the electrical supply should be made to be certain the voltage, phase and frequency match that of the pump motor.
The proper operating voltage and other electrical information can be found on the pump nameplate.

These motors are designed to run on + / - 10 % of the nameplate-rated voltage.

Wiring connection diagrams can be found inside the terminal box cover and later in these Installation and Operating Instructions. If voltage variations are larger than + / - 10 %, do not operate the pump.

3.4 Pumped liquid requirements

Caution ***The UPS pump is intended for use with water only.***

The pump can be used to circulate:

- Potable hot water
- Water for hydronic heating
- Water/glycol mixtures up to 50/50
- Cooling water

In domestic hot-water systems it is advisable to use bronze pumps (UPS model) only for water with a degree of hardness lower than 14 grains per gallon of hardness. For water with a higher degree of hardness, a direct-coupled Grundfos TP pump is recommended.

If the pump is installed in a heating system, the water should meet the requirements of accepted standards on water quality in heating systems.

In water/glycol mixtures, in order to prevent the glycol from degrading, temperatures above those for which the fluid is rated should be avoided and time spent at high temperatures minimized.

It is also important that the system is cleaned and flushed prior to the installation of the glycol mixture.

In order to avoid problems with corrosion or precipitation, the glycol fluids should be checked and maintained regularly. If further dilution of the supplied glycol is required, follow the requirements of the supplier of the glycol.

Warning
Glycol with the trade name DEXCOOL® can harm the pump.

DEXCOOL® is a registered trademark of General Motors Corporation, used under license by Texaco Lubricants NA.

The pump is lubricated and cooled by the liquid being pumped. Therefore, the pumped liquid must always be allowed to circulate through the pump. Extended periods without circulation will cause premature wear to the bearings and excessive motor heat. The pumped liquid must also meet the following requirements:

Minimum pump inlet pressure (during operation)

UPS model	At these liquid temperatures					
	167 °F/75 °C		194 °F/90 °C		230 °F/110 °C	
	[psi]	hf	[psi]	hf	[psi]	hf
32-40/4	0.7	1.6	2.2	5.1	21.0	48.5
32-80/2	0.7	1.6	5.1	11.8	23.9	55.2
32-160/2	11.6	26.8	16.0	37.0	34.1	78.8
40-40/4	0.7	1.6	4.4	10.2	23.2	53.6
40-80/4	0.7	1.6	1.5	3.5	18.1	41.8
40-80/2	6.5	15.0	10.9	25.2	29.0	67.0
40-160/2	5.1	11.8	9.4	21.7	27.6	63.8
40-240/2	11.6	26.8	16.0	37.0	34.1	78.8
50-40/4	0.7	1.6	2.9	6.7	21.8	50.4
50-80/4	0.7	1.6	4.4	10.2	23.2	53.6
50-80/2	4.4	10.2	8.7	20.1	26.8	61.9
50-160/2	11.6	26.8	16.0	37.0	34.1	78.8
50-240/2	10.2	23.6	14.5	33.5	32.6	75.3
53-55/57	4.4	10.2	8.7	20.1	26.8	61.9
75-69	11.6	26.8	16	37	34.1	78.8
80-40/4	11.6	26.8	16.0	37.0	34.1	78.8
80-80/4	14.5	33.5	18.9	43.7	37.0	85.5
80-160/2	21.8	50.4	26.1	60.3	43.5	100.5
100-40/4	27.6	63.8	31.9	73.7	50.0	115.5

Liquid temperature range

Continuously:
14 °F (-10 °C) up to 230 °F (110 °C).

Intermittent:
< 284 °F (140 °C) for short periods of time.

Domestic hot water:
< 140 °F (60 °C).

4. Installation procedures

Warning

Never make any connections in the pump terminal box unless the electrical supply has been switched off.

4.1 Electrical preparation

Terminal box position

At the bottom of the stator, closest to the pump housing, there are eight drain holes to allow condensed water to escape. The drain holes shall not be blocked. The drain holes must point downwards. The terminal box must therefore point upwards in one of the positions shown in fig. 1. The following terminal box positions apply whether the piping is mounted vertically or horizontally.



TM03 7296 4706

Fig. 1 Possible terminal box positions

Rotating the terminal box

To change the position of the terminal box, follow these steps:

Warning

If the pump is already installed in the system, the system must be drained or the isolation valves on both sides of the pump must be closed before the allen-head screws are removed as the pumped liquid may be scalding hot and/or under pressure.

Do not start the pump until the system has been filled with liquid and vented.

1. Remove the four allen-head screws holding the pump head onto the pump housing.
2. Carefully lift the pump head and rotate it so the terminal box is in the desired position. DO NOT locate the terminal box beneath the pump. Make sure the O-ring is properly seated in the pump housing.
3. Replace the pump head onto the pump housing.
4. Tighten the allen-head screws evenly. Torque:
   8 mm: 15 ft lbs
   10 mm: 25 ft lbs.
5. Check to make sure the rotor turns freely. Do this by removing the vent plug in the middle of the pump nameplate. Insert a medium size flat-blade screwdriver into the slot at the exposed end of the shaft. Gently turn the shaft. If it does not turn easily, repeat steps 1 to 4 above.
6. The position of the nameplate can be changed by easing the outer edge of the plate at the cutout with a screwdriver. Turn the nameplate to the required position and push into place.
7. Refer to page 19 and page 20 for additional instructions.

4.2 Piping considerations

Thoroughly clean and flush all dirt and sediment from the system before attempting to install the pump.

Location in the piping line

The pump should never be located at the lowest point of the piping system, where dirt and sediment collect. Nor should it be located at the highest point of the piping system, where air accumulates.

Mounting positions

The arrows on the flanges of the pump indicate the direction of water flow. Although the UPS may be installed in either vertical or horizontal piping, the motor shaft must always remain horizontal, as shown in fig. 1 and fig. 2.

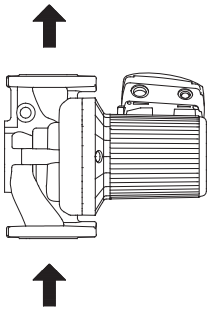

TM03 7290 4706

Fig. 2 Direction of water flow through the pump

Note

Pumps installed outdoors must be protected by a ventilated, watertight cover to keep out moisture and dirt.

Warning

The pump must be positioned so that someone cannot accidentally come into contact with the hot surfaces of the pump.

4.3 Connect the pump

Install the pump into the piping system.

Grundfos recommends that pressure gauges be installed in the inlet and discharge flanges or pipes to check pump and system performance.

4.4 Electrical connection

The electrical connection and protection should be carried out in accordance with the latest edition of the National Electrical Code, local codes and regulations by a qualified electrician.

Warning

Never make any connections in the pump terminal box unless the electrical supply has been switched off.

The pump must be grounded.

The pump must be connected to an external main power switch.

The operating voltage and frequency are marked on the pump nameplate. Make sure that the motor is suitable for the electrical supply it is being installed to.

The pump should be grounded to protect against indirect contact and a ground fault interrupter can be used as extra protection.

Multi-speed pump (single-phase)

All single-phase pumps are equipped with built-in, automatic resetting, thermal overload protection. The pump is protected at all three speeds.

Multi-speed pump (three-phase)

The pump must be connected to the electrical supply via an external contactor. The contactor must be connected to the built-in thermal overload switch terminals T1 and T2 (3 x 208-230 V) or P1 and P2 (3 x 460 V and 575 V) to protect the pump against overloading at all three speeds.

OR: If the pump is protected by means of a motor starter, the starter must be set to the current consumption of the pump at the selected speed. The motor starter setting must be changed every time the pump speed is changed. The current consumption at the individual speeds is stated on the pump nameplate.

Figures 4, 6, 7, 9, and 10 on the next pages show the possible connections.

4.4.1 UPS 1 x 115 V and 1 x 230 V terminal box

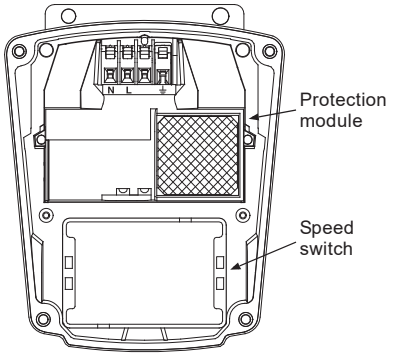

Fig. 3 UPS 1 x 115 V and 1 x 230 V terminal box

All UPS single-phase pumps come with a protection module and a speed switch as shown in fig. 3. All pumps are equipped with built-in, automatic resetting, thermal overload protection. The pump is protected at all three speeds.

Wiring diagrams

Figure 4 shows the electrical connections for a single-phase pump with protection module.

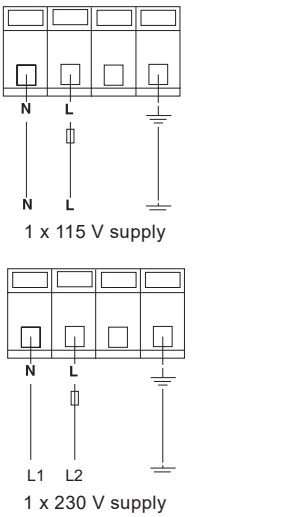

Fig. 4 1 x 115 V and 1 x 230 V supply

Note

Provide electrical disconnect and current protection as per local electrical codes.

K = External contactor sized to FL and LR pump current.

4.4.2 UPS 3 x 208-230 V terminal box

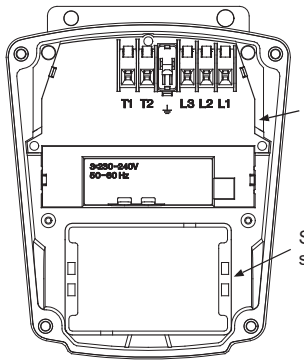

Fig. 5 UPS 3 x 208-230 V terminal box

All UPS pumps with three-phase x 208-230 V come with a standard module and a speed switch as shown in fig. 5. All pumps are equipped with an internal thermal overload switch (terminals T1 and T2, to be connected to an external contactor) to protect the pump at all three speeds.

Wiring diagrams

Figure 6 shows the electrical connections when using an external changeover contact (safety circuit) for start/stop push button station.

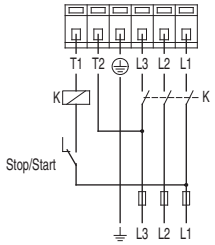

Fig. 6 External changeover contact

Auxiliary contacts rated for supply voltage.

Figure 7 shows the electrical connections when using external impulse contacts (momentary contacts) for start/stop push button station.

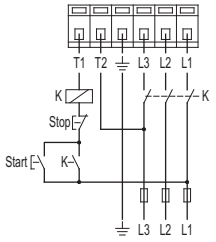

Fig. 7 External impulse contacts

4.4.3 UPS 3 x 460 V and 575 V terminal box

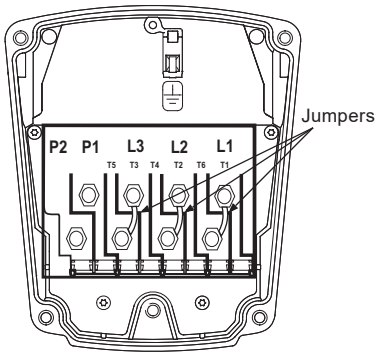

Fig. 8 UPS 3 x 460 V and 575 V terminal box

All UPS pumps with three-phase x 460 V and 575 V terminal boxes (fig. 8) come with a special two-speed terminal box. The speed is changed by the orientation of the jumpers as shown on page 12. All pumps are equipped with an internal thermal overload switch (terminals P1 and P2) to be connected to external contactor.

Wiring diagrams

Figure 9 shows the electrical connections when using an external changeover contact (safety circuit) for start/stop push button station.

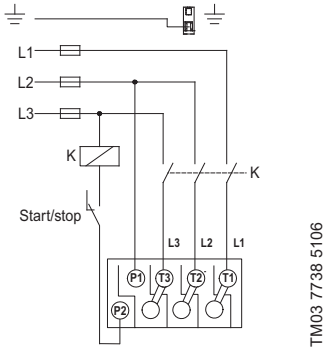

Fig. 9 External changeover contact

Auxiliary contacts rated for supply voltage.

Figure 10 shows the electrical connections when using external impulse contacts (momentary contacts) for start/stop push button station.

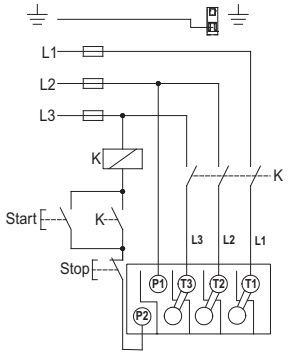

TM03 7737 4806

Fig. 10 External impulse contacts

5. Starting the pump

5.1 Vent the piping system

After the pump has been installed and the electrical connections made, the piping system must be vented.

Caution ***Never operate the pump dry - the system must first be filled with liquid and vented.***

Note ***Do not vent the piping system through the pump.***

Instead, follow these steps:

1. Fill and pressurize the system with liquid, and vent all trapped air from the piping by suitable means.
2. If any isolation valves are used, make sure they are OPEN.

Warning

If the vent screw is to be loosened, care should be taken to ensure that the escaping scalding hot liquid does not cause personal injury or damage to components (see fig. 12).

5.2 Check the direction of shaft rotation

Applies to 460 V and 575 V two-speed models only

(The direction of rotation of three-speed pumps is checked by means of the fault finding chart, page 13 and page 14).

1. Make sure that the power is OFF.
2. Unscrew and remove the vent plug located at the center of the nameplate.
3. Insert a small, flat-blade screwdriver into the slot in the end of the motor shaft (see fig. 12). Rotate the shaft with the screwdriver to make sure it does so freely.
4. Bump the pump and watch to see which direction the shaft rotates. The shaft must rotate in the counterclockwise direction as shown on the nameplate (see fig. 11).
5. If the pump shaft is rotating incorrectly, disconnect the power and interchange any two power leads in the terminal box.
6. Check once again for proper counterclockwise rotation. When it is rotating correctly, replace the vent plug.

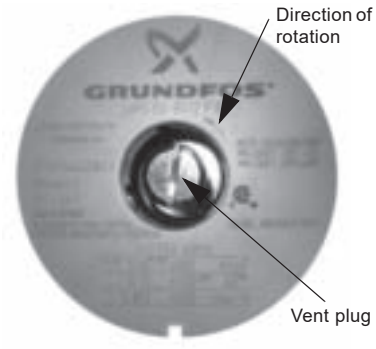

TM03 7750 1512

Fig. 11 Vent plug and direction of rotation

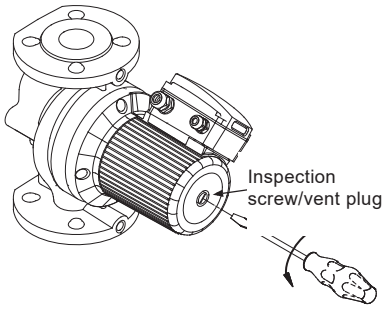

TM03 7277 4706

Fig. 12 Removing the vent plug

5.3 Speed selection

5.3.1 Three-speed pumps, all models except 3 x 460 V and 575 V

The speed switch in the terminal box can be turned to three positions. The speed in the three positions appears in the table below (also see fig. 13).

Switch position	Speed in % of maximum speed	
	Single-phase pumps	Three-phase pumps
1	approx. 60 %	approx. 70 %
2	approx. 80 %	approx. 85 %
3	100 %	100 %

Changing to lower speeds offers considerable reduction in energy consumption and less noise in the system.

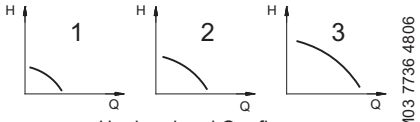

H = head and Q = flow

Fig. 13 Pump performance at speed settings

Warning

Never make any connections in the pump terminal box unless the electrical supply has been switched off.

Change the pump performance as follows:

1. Switch off the electrical supply to the pump at the main circuit breaker.
   The green indicator light in the terminal box must be off.
2. Remove the terminal box cover by loosening the four screws in the cover.
3. Pull out the speed switch module and re-insert it so that the desired speed is visible through the window in the terminal box (see fig. 14).

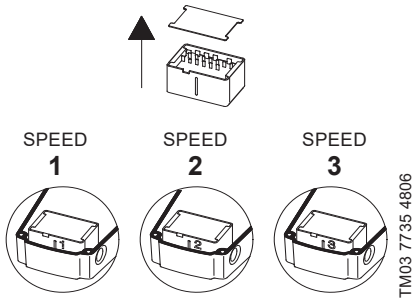

Fig. 14 Speed switch module

Note ***When changing to and from speed 1, the cover of the speed switch module must be removed and fitted on the other side of the switch.***

4. Fit the terminal box cover back onto the terminal box and tighten the four screws in the cover.
5. Switch on the electrical supply.
   Check that the green indicator light is permanently on or flashing.

Note ***The speed switch module must never be used as an on/off switch.***

5.3.2 Two-speed pumps, 3 x 460 V and 575 V

The speed setting in the terminal box can be changed to two positions. The speed in the two positions appears in the table below (also see fig. 13 on page 11).

Speed step	Speed in % of max. speed
1	approx. 75 %
2	100 %

Warning

Never make any connections in the pump terminal box unless the electrical supply has been switched off.

Change the pump performance as follows:

The speed is changed by the position of the jumpers in the terminals. The jumpers are fitted according to:

- figure 15 for speed 1 - low speed
- figure 16 for speed 2 - high speed.

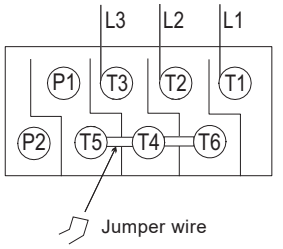

TM03 7734 4806

Fig. 15 Speed 1 (low speed)

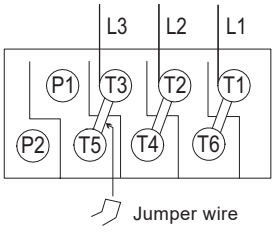

TM03 7733 4806

Fig. 16 Speed 2 (high speed)

6. Troubleshooting

6.1 Fault finding chart

Warning

Before removing the terminal box cover, make sure that the electrical supply has been switched off and that it cannot be accidentally switched on.

The pumped liquid may be scalding hot and under high pressure. Before any removal or dismantling of the pump, the system must be drained or the isolation valves on both sides of the pump must be closed.

Fault		Cause		Remedy
1.	The pump does not run. None of the indicator lights are on.	a)	One fuse in the installation is blown.	Replace the fuse.
		b)	External circuit breaker is switched off.	Switch the circuit breaker on.
		c)	Current-/voltage-operated ground fault interrupter has tripped.	Repair the insulation defects and reset the interrupter.
		d)	The pump's internal thermal overload switch has cut out **(standard module only)**.	Check that the liquid temperature falls within the specified range. **With external on/off changeover contact:** The pump will restart automatically when it has cooled to normal temperature. **With external on/off impulse contacts:** The pump can be restarted when it has cooled to normal temperature.
2.	The pump does not run. The green indicator light is on.	a)	Rotor blocked, but the pump hasn't been cut out by the thermal overload switch.	Switch off the electrical supply and clean/repair the pump.
		b)	The speed switch module has not been fitted.	Switch off the electrical supply at the external circuit breaker and fit the speed switch module into position.
3.	**Three-phase pumps only:** The pump is running. The red and green indicator lights are on.	a)	The pump is running with the wrong direction of rotation.	Switch off the electrical supply at the external circuit breaker and interchange any two phases (leads) in the pump terminal box.
4.	Noise in the system. The green indicator light is on.	a)	Air in the system.	Vent the system.
		b)	The pump flow is too high.	Reduce the pump performance.
		c)	The pressure is too high.	Reduce the pump performance.
5.	Noise in the pump. The green indicator light is on.	a)	Air in the pump.	Vent the pump.
		b)	The inlet pressure is too low.	Increase the inlet pressure and/or check the air volume in the expansion tank (if installed).
6.	Insufficient heat in some places in the heating system.	a)	The pump performance is too low.	Increase the pump performance, if possible, or replace the pump with a pump with higher flow.

Fault	Cause	Remedy
7. **Single-phase pumps with protection module (only).** The pump does not run. The red indicator light is on. The green indicator light is off.	a) The pump has been cut out by the thermal overload switch due to high liquid temperature or blocked rotor.	Check that the liquid temperature falls within the specified range. The pump will restart automatically when it has cooled to normal temperature. **NOTE:** If the thermal overload switch has cut out the pump three times within a short period, the pump must be restarted manually by switching off the electrical supply.
	b) The speed switch module has not been fitted.	Switch off the electrical supply by means of the external mains switch and fit the speed switch module.

6.2 Preliminary checks

Supply voltage

To check the voltage being supplied to the motor, use a voltmeter.

Warning

Be careful, since power is still being supplied to the pump. Do not touch the voltmeter leads together while they are in contact with the power lines.

Single-phase motors	Three-phase motors
Touch one voltmeter lead to each of the lines supplying power to the pump: • L and N for 115 V circuits • L1 and L2 for 230 V circuits.	Touch a voltmeter lead to: • Power leads L1 and L2 • Power leads L2 and L3 • Power leads L3 and L1. These tests should give a reading of full line voltage.

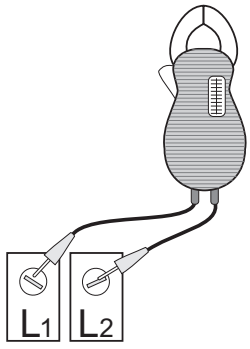

TM03 7749 4806

Fig. 17 Checking single-phase power

Evaluation

When the motor is under load, the voltage should be within 10 % (+ or -) of the nameplate voltage. Any variation larger than this may indicate a poor electrical supply and can cause damage to the motor windings. The motor should not be operated under these conditions. Contact your power supplier to correct the problem or change the motor to one requiring the voltage you are receiving.

6.3 Current measurement

To check the current, use an ammeter.

To do so, follow these steps:

1. Make sure the pump is operating.
2. Set the ammeter to the proper scale.
3. Place the tongs of the ammeter around the leg to be measured.
4. Compare the results with the amp draw information on the motor nameplate.
5. Repeat for the other legs.

Evaluation

If the current draw exceeds the listed nameplate amps, or if the current imbalance is greater than 5 % between each leg on three-phase units, then check the following:

- The voltage supplied to the pump may be too high or too low.
- The contacts on the motor starter may be burned.
- The terminals in the starter or terminal box may be loose.
- There may be a winding defect. Check the winding and insulation resistance.
- The motor windings may be shorted or grounded.
- The pump may be damaged in some way and may be causing a motor overload.
- A voltage supply or balance problem may exist.

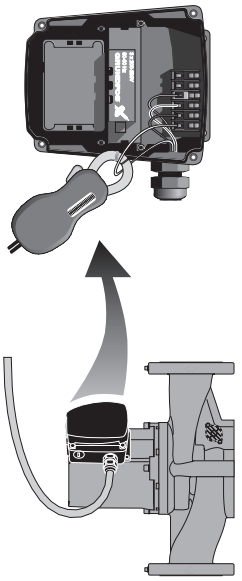

TM03 7293 4706

Fig. 18 Current measurement

6.4 Insulation resistance (lead-to-ground)

To check the insulation resistance (lead-to-ground) of the motor and leads, a megohmmeter is required.

To do so, follow these steps:

1. Turn the POWER OFF.
2. Disconnect all electrical leads to the motor.
3. Set the scale selector on the megohmmeter to R x 100K, touch its leads together, and adjust the indicator to zero.
4. Touch the leads of the megohmmeter individually to each of the motor leads and to ground (i.e. L1 to ground; L2 to ground, etc.).

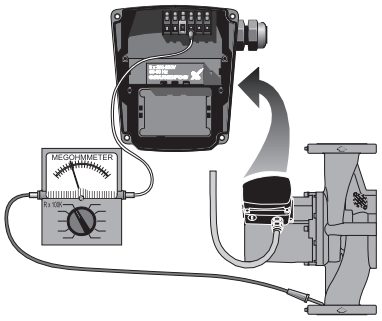

TM03 7293 4706

Fig. 19 Insulation resistance measurement

Evaluation

The resistance values for new motors must exceed 1,000,000 ohms. If they do not, replace the motor.

6.5 Winding resistance (line-to-line)

To check the winding resistance of the motor windings, a megohmmeter is required.

To do so, follow these steps:

1. Turn the POWER OFF.
2. Disconnect all electrical leads to the motor.
3. Set the scale selector on the megohmmeter to R x 1, touch its leads together, and adjust the indicator to zero.
4. Using the charts below for reference, touch the leads of the megohmmeter to the appropriate pair of connectors. Check all pairs that are present and write down and label (RA, RS_1, RS_2, R) all readings.
5. Compare your readings to the matching model, phase and voltage on the chart on page 17 and page 18.

Evaluation

The resistance values must fall within the tolerances listed on page 17 or page 18. If they do not, replace the motor.

Internal wiring UPS

Terminal plug in stator

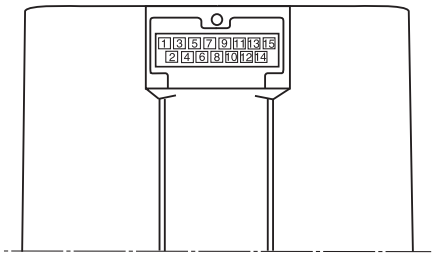

Single-phase

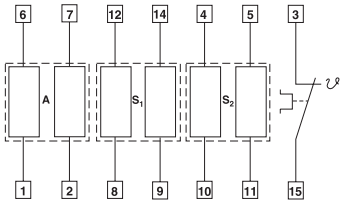

RA: 6-1 or 6-1, 7-2
RS_1: 12-8 or 12-8, 14-9
RS_2: 4-10 or 4-10, 5-11

RA: Main winding

RS_1: Auxiliary winding
RS_2: Auxiliary winding

Three-phase 208-230 V

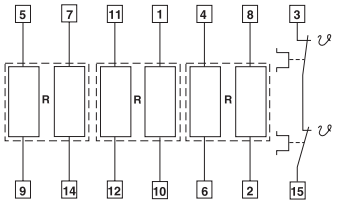

R: 5-9 or 5-9, 7-14
R: 11-12 or 11-12, 1-10
R: 4-6 or 4-6, 8-2

Internal wiring UPS

Terminal plug in stator

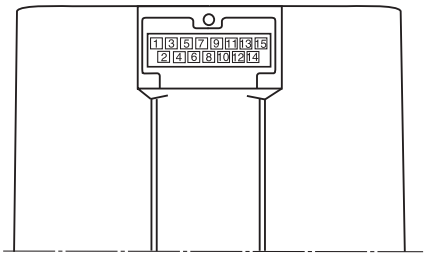

Three-phase 460/575 V

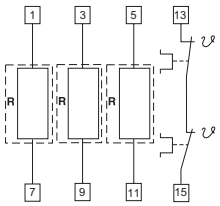

6.6 Winding resistance chart

60 Hz

Pump type	Voltage	[Ω] 68 °F - 122 °F (20 °C - 50 °C)			
		R	RA	RS_1	RS_2
UPS 32-40/4	1 x 115 V		17.8 - 23.2	3.95 - 5.20	9.40 - 12.4
	1 x 230 V		70.0 - 91.5	17.0 - 22.2	39.5 - 52.0
	3 x 208-230 V	180 - 236			
	3 x 460 V	360 - 470			
	3 x 575 V	575 - 750			
UPS 32-80/2	1 x 115 V		9.55 - 12.6	3.05 - 4.00	6.70 - 8.80
	1 x 230 V		19.4 - 25.5	5.45 - 7.10	12.6 - 16.4
	3 x 208-230 V	44.0 - 57.5			
	3 x 460 V	83.5 - 110			
	3 x 575 V	132 - 174			
UPS 32-160/2	1 x 115 V		4.15 - 5.45	1.20 - 1.56	2.65 - 3.50
	1 x 230 V		8.30 - 10.8	2.20 - 2.90	5.05 - 6.65
	3 x 208-230 V	26.0 - 34.0			
	3 x 460 V	53.5 - 70.0			
	3 x 575 V	84.5 - 110			
UPS 40-40/4	1 x 115 V		11.4 - 15.0	2.95 - 3.85	5.60 - 7.35
	1 x 230 V		50.5 - 66.5	14.0 - 18.4	25.5 - 34.0
	3 x 208-230 V	118 - 154			
	3 x 460 V	234 - 310			
	3 x 575 V	360 - 475			
UPS 40-80/2	1 x 115 V		5.60 - 7.35	1.84 - 2.42	4.50 - 5.90
	1 x 230 V		11.0 - 14.4	3.95 - 5.20	8.55 - 11.2
	3 x 208-230 V	32.0 - 42.0			
	3 x 460 V	64.0 - 84.0			
	3 x 575 V	102 - 132			
UPS 40-80/4	1 x 115 V		4.15 - 5.45	1.94 - 2.55	3.30 - 4.35
	1 x 230 V		8.10 - 10.6	3.05 - 4.00	4.60 - 6.05
	3 x 208-230 V	46.5 - 61.0			
	3 x 460 V	90.5 - 118			
	3 x 575 V	164 - 216			
UPS 40-160/2	1 x 115 V		2.85 - 3.75	1.10 - 1.44	1.94 - 2.55
	1 x 230 V		5.60 - 7.35	2.02 - 2.66	3.75 - 4.95
	3 x 208-230 V	22.8 - 30.0			
	3 x 460 V	45.5 - 59.5			
	3 x 575 V	72.0 - 95.0			
UPS 40-240/2	1 x 230 V		6.80 - 8.95	2.02 - 2.65	3.70 - 4.85
	3 x 208-230 V	11.0 - 14.4			
	3 x 460 V	22.0 - 29.0			
	3 x 575 V	35.0 - 45.5			

Pump type	Voltage	[Ω] 68 °F - 122 °F (20 °C - 50 °C)			
		R	RA	RS_1	RS_2
UPS 50-40/4	1 x 115 V		6.55 - 8.55	2.12 - 2.80	4.30 - 5.65
	1 x 230 V		25.0 - 33.0	8.30 - 10.8	15.0 - 19.8
	3 x 208-230 V	57.5 - 75.0			
	3 x 460 V	114 - 148			
	3 x 575 V	184 - 242			
UPS 50-80/2	1 x 115 V		4.15 - 5.45	1.20 - 1.56	2.65 - 3.50
	1 x 230 V		8.30 - 10.80	2.20 - 2.90	5.05 - 6.65
	3 x 208-230 V	26.0 - 34.0			
	3 x 460 V	33.5 - 70.0			
	3 x 575 V	84.5 - 110			
UPS 50-80/4	1 x 115 V		2.75 - 3.60	1.74 - 2.30	2.85 - 3.75
	1 x 230 V		5.50 - 7.25	2.65 - 3.50	4.95 - 6.50
	3 x 208-230 V	37.0 - 49.0			
	3 x 460 V	79.0 - 104			
	3 x 575 V	120 - 156			
UPS 50-160/2	1 x 230 V		6.80 - 8.95	2.02 - 2.65	3.70 - 4.85
	3 x 208-230 V	12.4 - 16.2			
	3 x 460 V	24.2 - 31.5			
	3 x 575 V	37.5 - 49.5			
UPS 50-240/2	3 x 208-230 V	7.80 - 10.2			
	3 x 460 V	15.6 - 20.6			
	3 x 575 V	25.0 - 33.0			
UPS 53-55/57	1 x 115 V		4.15 - 5.45	1.20 - 1.56	2.65 - 3.50
	1 x 230 V		8.30 - 10.80	2.20 - 2.90	5.05 - 6.65
	3 x 208-230 V	26.0 - 34.0			
	3 x 460 V	33.5 - 70.0			
	3 x 575 V	84.5 - 110			
UPS 75-69	1 x 230 V		6.80 - 8.95	2.02 - 2.65	3.70 - 4.85
	3 x 208-230 V	12.4 - 16.2			
	3 x 460 V	24.2 - 31.5			
	3 x 575 V	37.5 - 49.5			
UPS 80-40/4	3 x 208-230 V	46.5 - 61.0			
	3 x 460 V	90.5 - 118			
	3 x 575 V	164 - 216			
UPS 80-80/4	3 x 208-230 V	23.6 - 31.0			
UPS 80 -160/2	3 x 208-230 V	7.80 - 10.2			
	3 x 460 V	15.6 - 20.6			
	3 x 575 V	25.0 - 33.0			
UPS 100-40/4	3 x 208-230 V	27.5 - 36.0			
	3 x 460 V	54.5 - 71.5			
	3 x 575 V	86.0 - 114			

7. Replacing components

7.1 Removing the pump head

1. Disconnect or TURN OFF the power supply.
2. Close any isolation valves on either side of the pump to avoid draining the system of liquid.
3. Disconnect the electrical leads from the terminal box.
4. Disconnect and remove the conduit from the terminal box.
5. Loosen and remove the four allen-head screws (8 or 10 mm) which connect the pump head housing to the pump housing.
6. Remove the pump head from the pump housing.
7. Clean the machined surfaces in the pump housing of any foreign material.

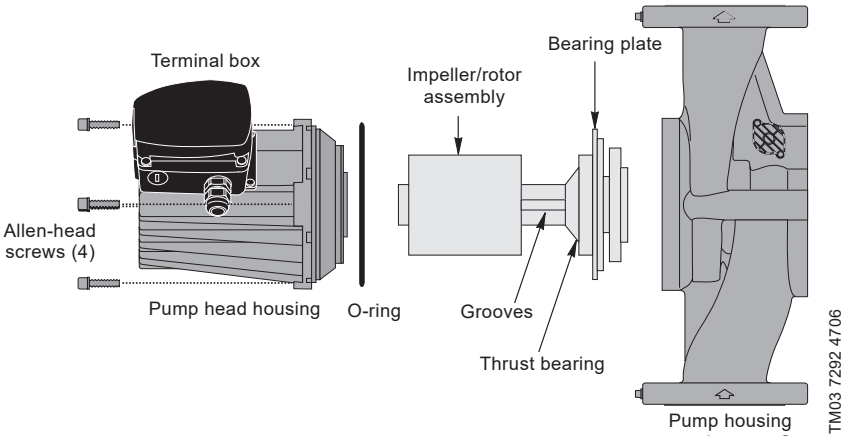

Fig. 20 Removing and fitting the pump head

7.2 Fitting the pump head

1. Carefully remove the new pump head assembly from its packaging. Separate the impeller/rotor assembly from the new pump head.
2. While holding the thrust bearing, carefully place the impeller/rotor assembly into the pump housing. The bearing plate should fit snugly into the lowest machined surface in the pump housing.
3. Make sure that the impeller/rotor assembly can rotate freely.
4. Place the O-ring over the rotor and locate it into the inner diameter of the pump housing.
5. Carefully place the pump head housing over the rotor and rotate it so the terminal box is in the position you wish, see section *4.1* under *Terminal box position*.
6. Make sure the pump head housing is properly seated on the pump housing. **Do not force the two together** - if there is binding, disassemble them and repeat steps 2 to 6. Tighten the allen-head screws evenly to secure the pump head.
   Torque:
   8 mm: 15 ft lb
   10 mm: 25 ft lb.
7. Check to make sure the motor shaft turns freely, as explained in section *4.1* under *Rotating the terminal box*.

7.3 Replacing the terminal box or capacitor

If the terminal box is replaced, make certain the electrical information listed on the new box matches the information listed on the old box, and that it is compatible with the pump and incoming electrical supply.

For all terminal boxes, it is very important to tightly secure the frame grounding screw through the terminal box, so that a proper connection between the terminal box and motor is made.

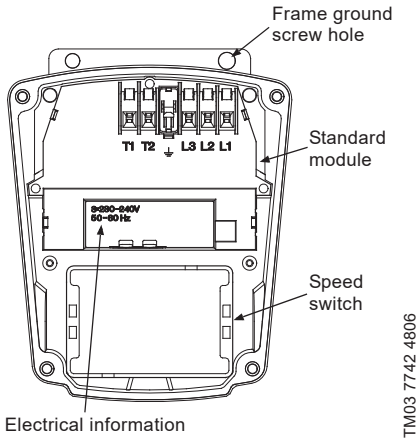

Fig. 21 Terminal box

All	1.	Before replacing the terminal box or capacitor, make sure the power is OFF.
	2.	Remove the terminal box cover by completely loosening all four torx/standard screws.
	3.	Remove the speed switch (noting its position) by pulling firmly and evenly on both sides of it. (Not for 460/575 V).
Capacitor	a.4.	**Capacitor replacement, single-phase pumps only:** Disconnect the two connector clips from the capacitor and unscrew the complete plastic strain relief nut. Remove capacitor wire and strain relief.
	a.5.	Screw in new complete strain relief nut and connect new clip connectors. Pull excess sheathed cable out of terminal box, being sure to leave at least 1/8" of sheath inside of terminal box.
Terminal box	b.4.	**Terminal box replacement:** Disconnect all wiring, remove the three phillips-head screws holding the terminal box in place and remove the terminal box by pulling firmly and evenly on both sides.
	b.5.	Check that the clear rubber gasket is in place around the terminal box connector stem, carefully press the terminal box into the stator socket, replace the three phillips-head terminal box screws and replace wiring.
All	6.	Replace the speed switch to its proper position, making sure to push it all the way in. (Not for 460/575 V).
	7.	Replace the terminal box cover and tighten all four torx/standard screws.
	8.	Switch on electrical power supply. The pump is now ready for operation.

8. Disposal

This product or parts of it must be disposed of in an environmentally sound way:

1. Use the public or private waste collection service.
2. If this is not possible, contact the nearest Grundfos company or service workshop.

Subject to alterations.

9

Mécanique Nordique
Plumbing
Heating
Ventillation
mecanique.nordique@hotmail.com
1255 Rue J.A.Bombardier Lévis QC G7A 2P4
Tél : (418) 496-1109 Fax : (418) 496-3803

REVIEWED BY CONTRACTOR
Kudlik Construction Ltd.
NAME: Sandra Rousseau P.Eng
DATE: Jul 04, 2018

IQUALUIT WWTP UPGRADES

DRAWING FOR APPROVAL

ENGINEER: **NUNAMI STANTEC LIMITED**

DRAWING #: AD-009 REV # 1

Previous shop drawing rejected as missing information. Missing information has been supplied here however all required info is not in one package.

Resubmit as one complete package with all info.

Section	:	23 11 13
Article	:	2.9 & 2.10
Plans	:	M-802 PUMP SCHEDULE
Application	:	FUEL OIL TRANSFER PUMPS
Brand	:	VIKING
Model	:	SG-40510-DUP-O , CPPPA05-100581
Revised #	:	REV # 1
Supplyer	:	WOLSELEY
Date	:	**04/07/2018**
By	:	Martin Boucher

STANTEC PROJECT #: 110126045
SUBMITTAL # AD-009 Rev#1

This review by Stantec is for general conformance with the design concept of Stantec's design of the:

- ☐ Architectural
- ☐ Structural
- ☑ Mechanical
- ☐ Electrical
- ☐ Other

Stantec

component(s) only and does not mean that Stantec has verified or approves the shop drawing(s). The Contractor remains solely responsible for the shop drawing(s) and this review by Stantec does not relieve the Contractor of the Contractor's responsibility for errors or omissions in the shop drawing(s) or for meeting the requirements of the contract documents. This review does not mean that Stantec approves the detailed design inherent in the shop drawing, responsibility for which shall remain with the Contractor submitting same, nor does this review mean that Stantec accepts any deviation of the shop drawing(s) from the contract documents. The Contractor is responsible for confirming all dimensions and correlating them at the job site, for all construction means, methods and techniques, and for coordination of construction work of all trades, including coordination of all shop drawings.

- ☐ REVIEWED
- ☐ REVIEWED, AS NOTED
- ☑ REVISE AND RESUBMIT
- ☐ NOT REVIEWED

DATE 2018-07-12
BY Brendan Zrum, P.Eng

DIMENSIONAL DRAWING SG-40510-DUP-O DUPLEX UNIT

NOTES
1) PIPES AND NIPPLES ARE CARBON STEEL SCH.80
2) ALL MALLEABLE IRON FITTINGS AND STEEL PIPING ARE MANUFACTURED IN USA/CANADA
3) PUMP SET IS LEAK TESTED WITH 100 PSI AIR AND SOAPY WATER

A	1.0" NPT COMMON SUCTION
B	.50" NPT COMMON DISCHARGE
C	.50" NPT DRAIN CONNECTION
D	9/16" DIA. 4-HOLES

0.5 hp | 1 ph 60 Hz 115 Volt | 1750 rpm | 56C Frame size

• Motors shall be Totally Enclosed Fan Cooled, C-Faced, NEMA Frame, CSA, Fractional Motor

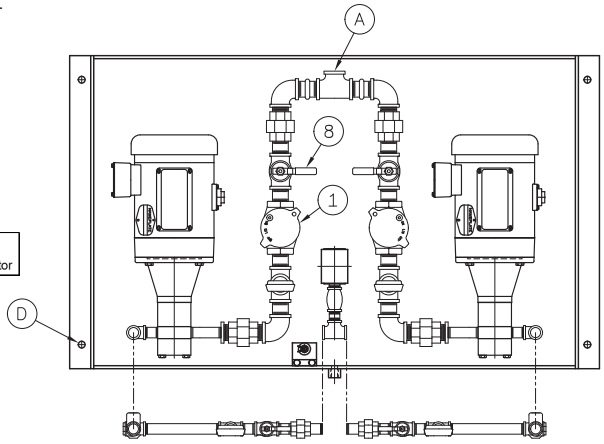

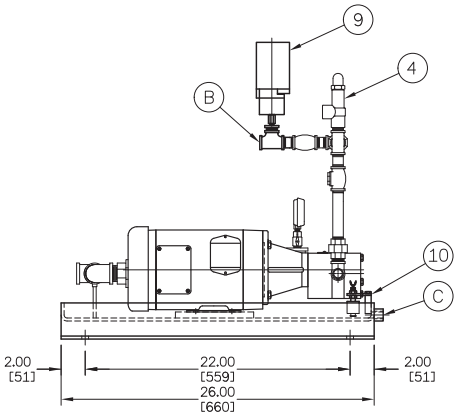

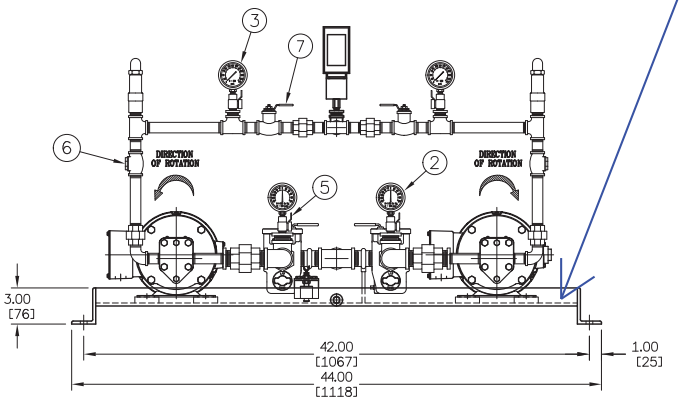

TAG: P-4.1 & P-4.2
SPEC 23 11 13 2.9 & 2.10
PUMP SCHEDULE M802

DRIP LIP IS 1-1/2IN LESS 1/4IN THICKNESS = 1-1/4

REVISION TABLE

REV	DESCRIPTION	DATE	BY
-	-	-	-
-	-	-	-
-	-	-	-

ITEM	BILL OF MATERIAL	EST. WEIGHT=
10	MAGNETIC FLOAT SWITCH	
9	PRESSURE SWITCH - DUAL STAGE 3-100 PSI	
8	1.0" NPT BALL VALVE	
7	.50" NPT BALL VALVE	
6	.50" NPT CHECK VALVE	
5	.25" NPT BALL VALVE	
4	FULFLO R.V. .50" NPT c/w GREEN-WS SPRING 30 - 100 PSI	
3	PRESSURE GUAGE 0-100 PSI LIQUID FILLED 2.5" FACE X .25" NPT	
2	COMPOUND GUAGE 30"-0-30 PSI LIQUID FILLED 2.5" FACE X .25" NPT	
1	F-1010 1.0" NPT LID EASE SIMPLEX BASKET STRAINER c/w 40 MESH S.S. BASKET	

THIRD ANGLE PROJECTION

Required Conditions	Capacity			Pressure			Liquid	Viscosity	Temperature	
	3.4	12.8	0.21	50.0	100.00	690.0	No. 2 Fuel Oil	38	76	24
	USGPM	L/min	L/sec	PSIG	Bar	kPa	SG 0.85	SSU	°F	°C

THIS DRAWING IS THE PROPERTY OF VIKING PUMP, INC. AND IS PROPRIETARY IN GENERAL AND DETAIL. IT SHALL NOT BE COPIED OR ITS CONTENTS REVEALED TO OUTSIDE PARTIES WITHOUT THE WRITTEN CONSENT OF VIKING PUMP, INC.

DIMENSIONAL DRAWING FOR VIKING DUPLEX FUEL OIL PACKAGE MODEL SG-40510-DUP-O WITH SG-40510 PUMPS AND M DRIVE BRACKETS TO SUIT 56C FRAME MOTORS.

VIKING PUMP
VIKING PUMP OF CANADA INC.
A Unit of IDEX Corporation
Windsor, Ontario N9A 6M3
CANADA

DATE: JAN 04/2018 | REV A.0

DRAWING NUMBER 800-SG-40510-DUPLEX-O-APP

TAG: P-4.1 & P-4.2
SPEC 23 11 13 2.9 & 2.10
PUMP SCHEDULE M802

120VAC/60Hz/1PH

ENCLOSURE TYPE: NEMA 4/12

(DEPTH OF PILOT AND OPERATOR DEVICES IN ADDITION TO LISTED DIMENSION)

CERTIFICAITON REQUIRED:
☐ESA
☒CSA
☐UL508A

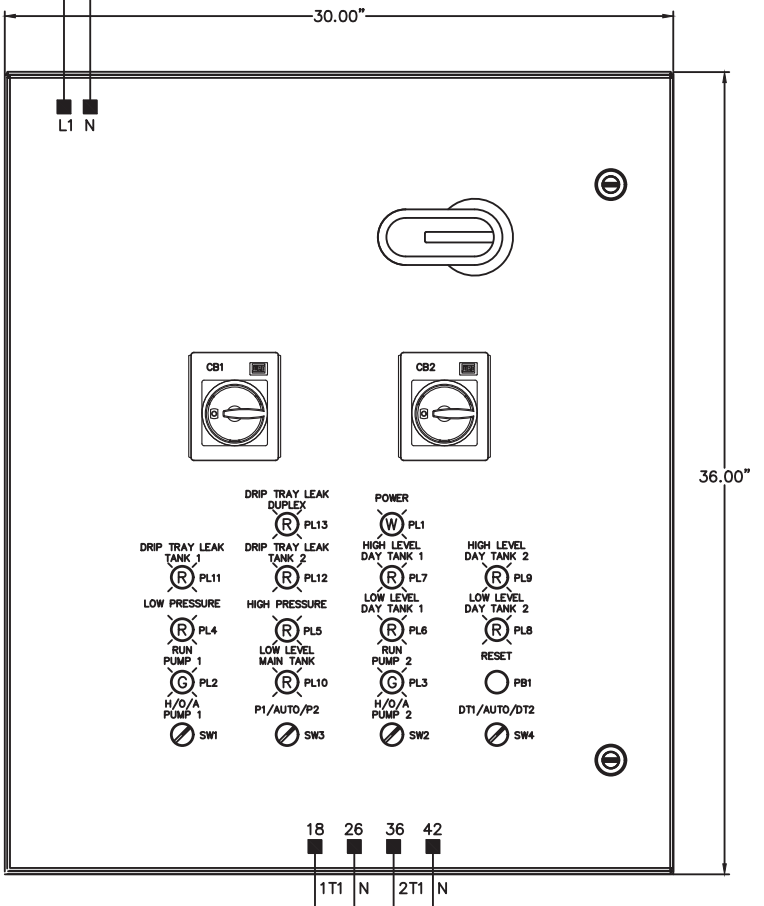

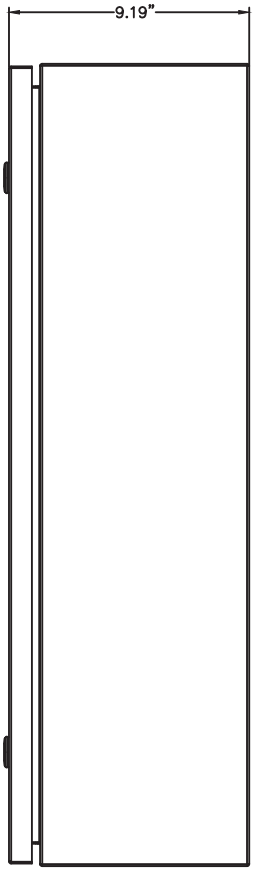

TERMINAL STRIP

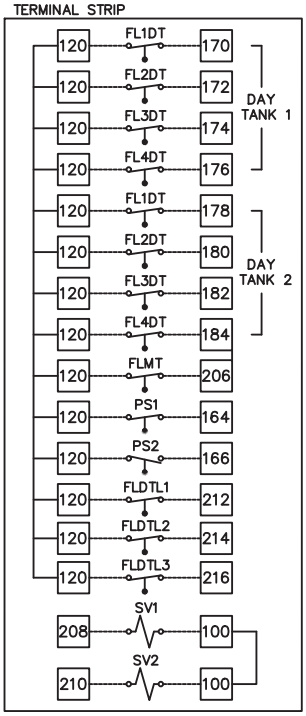

JMP MOTOR1: 120VAC LINE
JMP MOTOR1: 120VAC NEUTRAL
JMP MOTOR2: 120VAC LINE
JMP MOTOR2: 120VAC NEUTRAL

FLOAT POSITIONS: DAY TANK 2

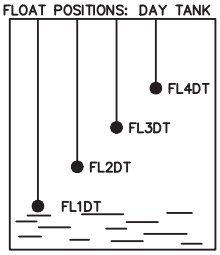

FLOAT POSITIONS: DAY TANK 1

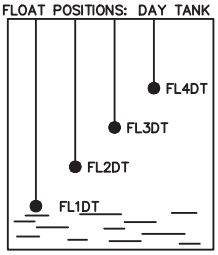

DEVICE AND OPERATION COMMENTS

P1–AUTO–P2: THE LEAD PUMP WILL ALTERNATE AFTER ALL THE PUMPS HAVE STOPPED UNDER NORMAL CONDITIONS IF SELECTOR SWITCH IS PLACED IN AUTO. IF LEAD PUMP FAILS, LAG PUMP WILL START

DT1–AUTO–DT2: DT1 AND DT2 FILL RESPECTIVE DAY TANKS ONLY. AUTO FILLS BOTH TANKS AS REQUIRED.

FL1DT: LOW LEVEL DAY TANK – STARTS LAG PUMP WHEN FLOAT SWITCH CLOSES. ACTIVATES VISUAL ALARM AND ALARM RELAY. ALARM MUST BE MANUALLY RESET

FL2DT: START LEAD PUMP – STARTS LEAD PUMP WHEN FLOAT SWITCH CLOSES. ACTIVATES VISUAL SIGNAL.

FL3DT: STOP ALL PUMPS – STOPS ALL PUMPS IN AUTOMATIC MODE WHEN FLOAT SWITCH OPENS.

FL4DT: HIGH LEVEL DAY TANK – STOPS ALL PUMPS WHEN FLOAT SWITCH OPENS. ACTIVATES VISUAL ALARM AND ALARY RELAY. ALARM AUTOMATICALLY RESETS..

PS1: LOW PRESSURE – STOPS ALL PUMPS IN AUTO MODE WHEN PRESSURE SWITCH CLOSES AFTER 1 MINUTE OF RUN TIME. ACTIVATES VISUAL ALARM AND ALARM RELAY. ALARM MUST BE MANUALLY RESET.

PS2: HIGH PRESSURE – STOPS ALL PUMPS WHEN SWITCH CLOSES. ACTIVATES VISUAL ALARM AND ALARM RELAY. ALARM MUST BE MANUALLY RESET.

SV1: SOLENOID VALVE – ENERGIZED WHEN FILLING DAY TANK 1

SV2: SOLENOID VALVE – ENERGIZED WHEN FILLING DAY TANK 2

FLMT: LOW LEVEL MAIN TANK – ACTIVATES VISUAL ALARM AND ALARM RELAY. ALARM MUST BE MANUALLY RESET

FLDTL1: DRIP TRAY LEAK DUPLEX – ACTIVATES VISUAL ALARM AND ALARM RELAY. ALARM AUTOMATICALLY RESETS.

FLDTL2: DRIP TRAY LEAK MAIN TANK 1 – ACTIVATES VISUAL ALARM AND ALARM RELAY. ALARM AUTOMATICALLY RESETS.

FLDTL3: DRIP TRAY LEAK MAIN TANK 2 – ACTIVATES VISUAL ALARM AND ALARM RELAY. ALARM AUTOMATICALLY RESETS.

ALARM RELAYS

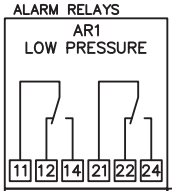

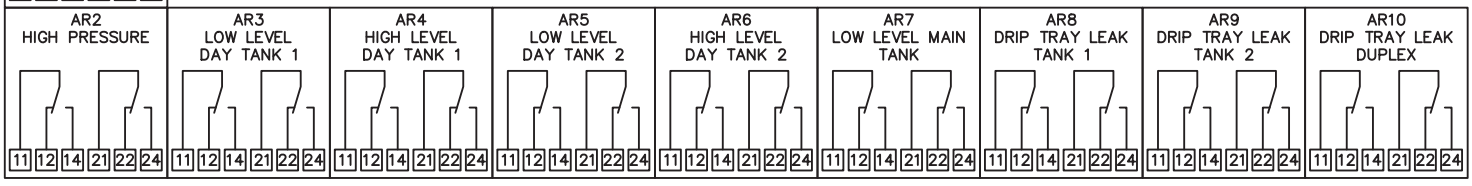

Itemref	Quantity	Customer		Article No./Reference		V.J. PAMENSKY CANADA INC.	CPPA05–180581		
N/A	1	VIKING PUMP OF CANADA		P.O.#		64 SAMOR ROAD TORONTO ON. M6A 1J6 1–877–PAMENSKY (726–3675)	MECH1	Revision 1	Sheet 1/4
Designed by	Revised by	Approval Date	File	Date	Scale				
DT	–	XXX XX, 2017	1MVIKI	JUL 03, 2018	N/A				

TAG: P-4.1 & P-4.2
SPEC 23 11 13 2.9 & 2.10
PUMP SCHEDULE M802

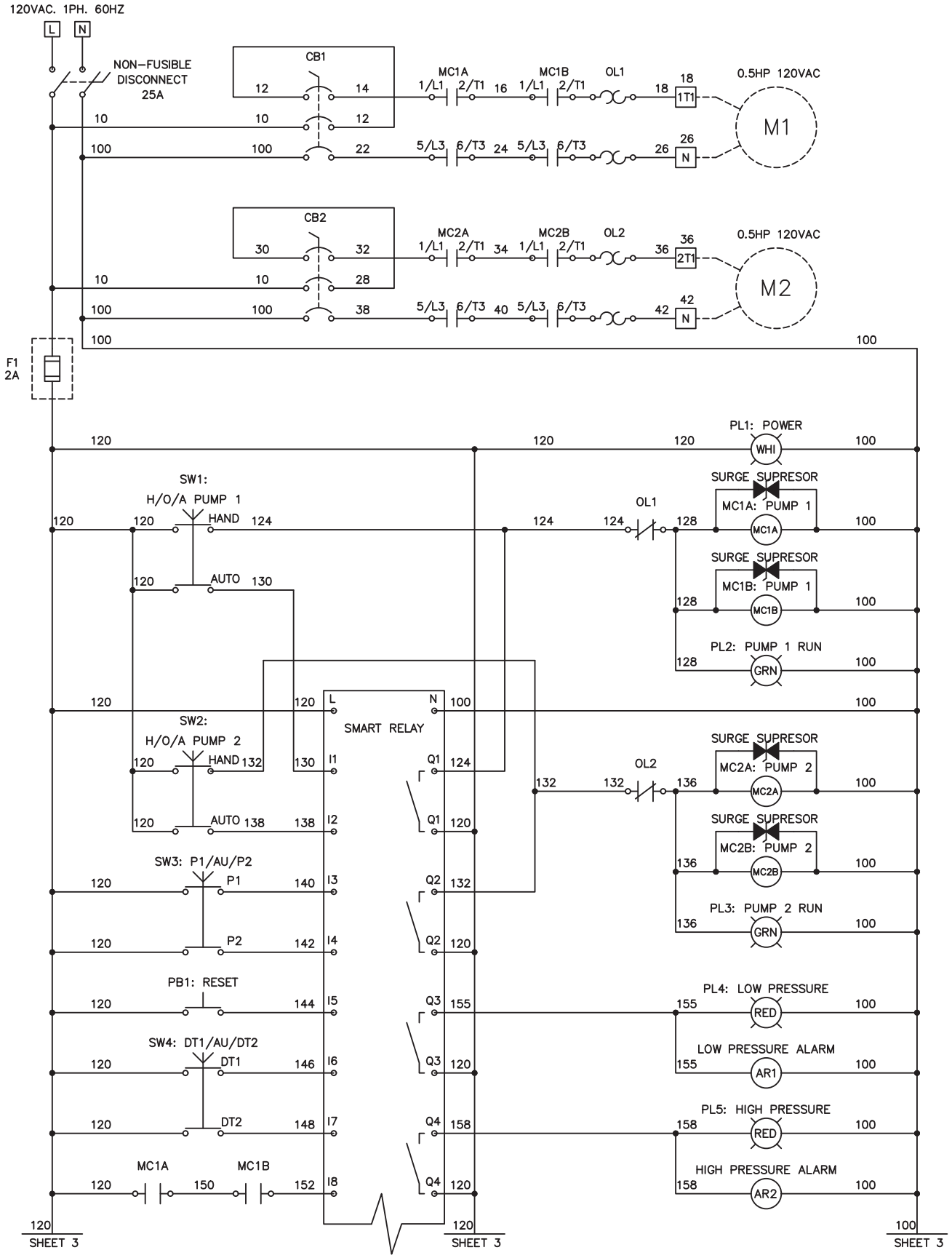

Itemref	Quantity	Customer		Article No./Reference		V.J. PAMENSKY CANADA INC.	CPPA05–180581		
N/A	1	VIKING PUMP OF CANADA		P.O.#		64 SAMOR ROAD TORONTO ON. M6A 1J6			
Designed by	Revised by	Approval Date	File	Date	Scale	1–877–PAMENSKY (726–3675)	ELEC1	Revision	Sheet
DT	–	XXX XX, 2017	1MVIKI	JUL 03, 2018	N/A			1	2/4

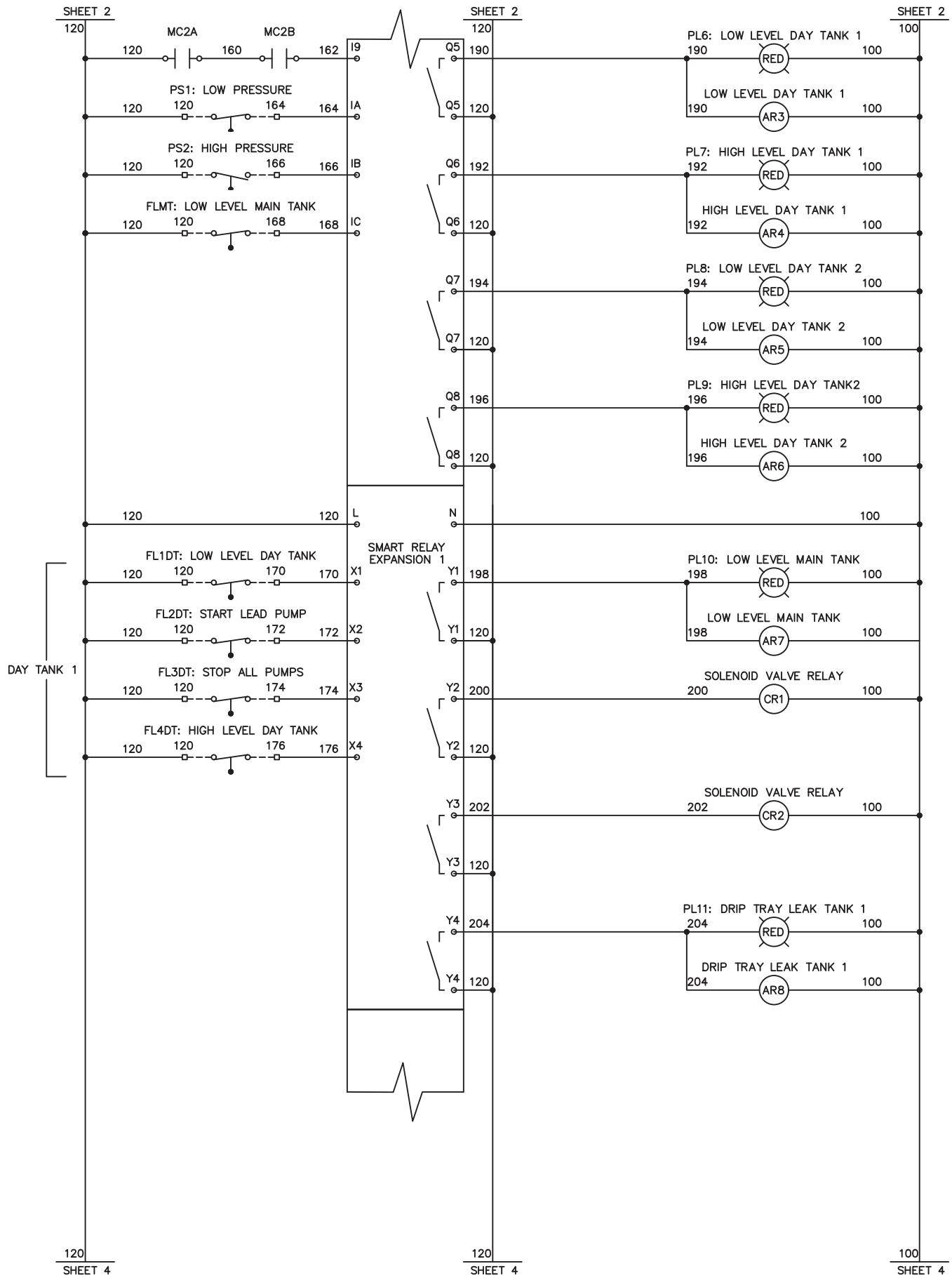

Itemref	Quantity	Customer		Article No./Reference		V.J. PAMENSKY CANADA INC.	CPPA05–180581		
N/A	1	VIKING PUMP OF CANADA		P.O.#		64 SAMOR ROAD TORONTO ON. M6A 1J6 1–877–PAMENSKY (726–3675)			
Designed by	Revised by	Approved by – date	File	Date	Scale		ELEC2	Revision	Sheet
DT	–	XXX XX, 2017	1MVIKI	JUL 03, 2018	N/A			1	3/4

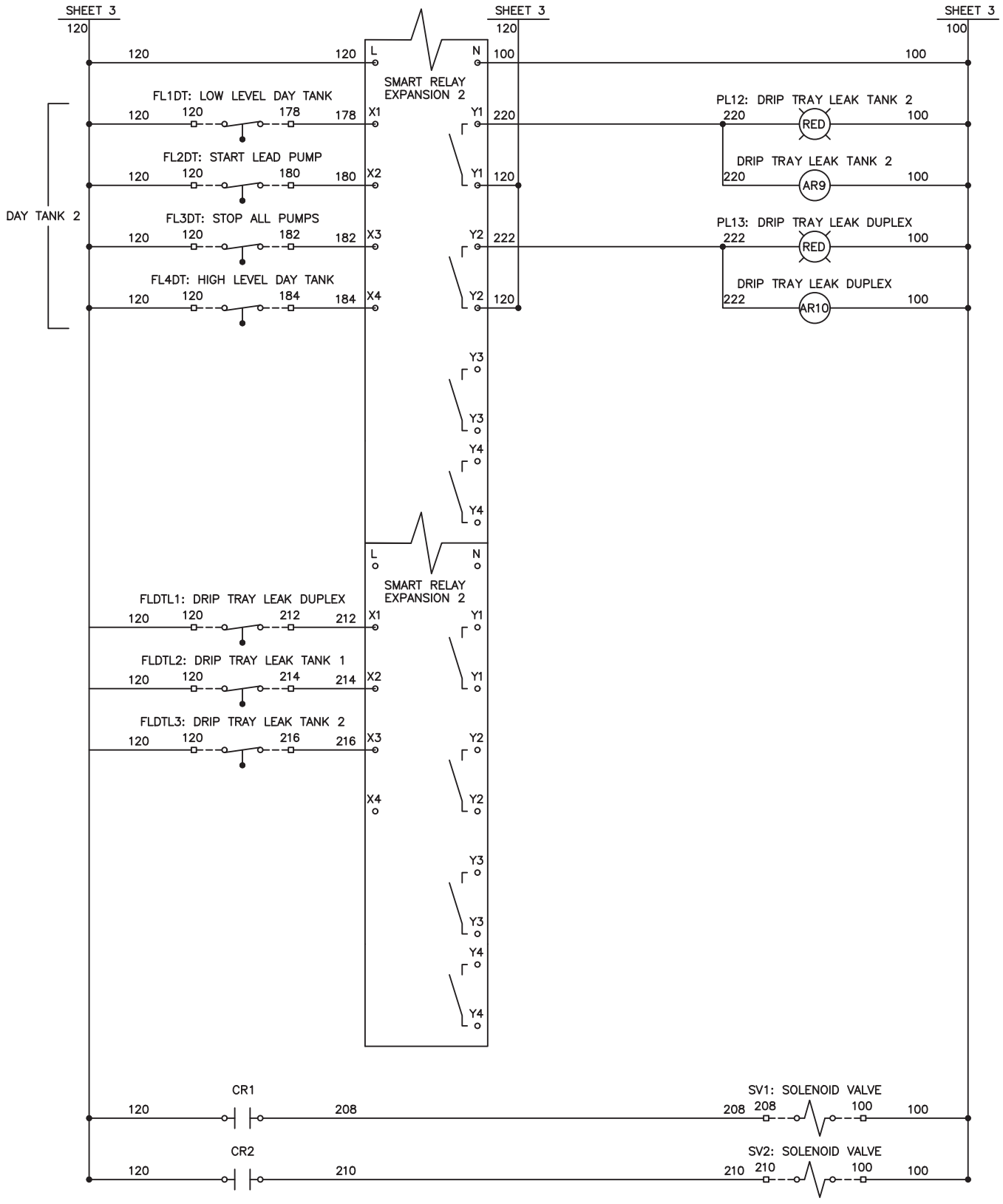

Itemref	Quantity	Customer			Article No./Reference		V.J. PAMENSKY CANADA INC.	CPPA05–180581		
N/A	1	VIKING PUMP OF CANADA			P.O.#		64 SAMOR ROAD TORONTO ON. M6A 1J6 1–877–PAMENSKY (726–3675)	ELEC3	Revision 1	Sheet 4/4
Designed by	Checked by	Approved by – date	File		Date	Scale				
DT	–	XXX XX, XXXX	1MVIKI		JUL 03, 2018	N/A				

VIKING PUMP

VIKING PUMP

Duplex Fuel Oil Packages

Field Start-Up Guide

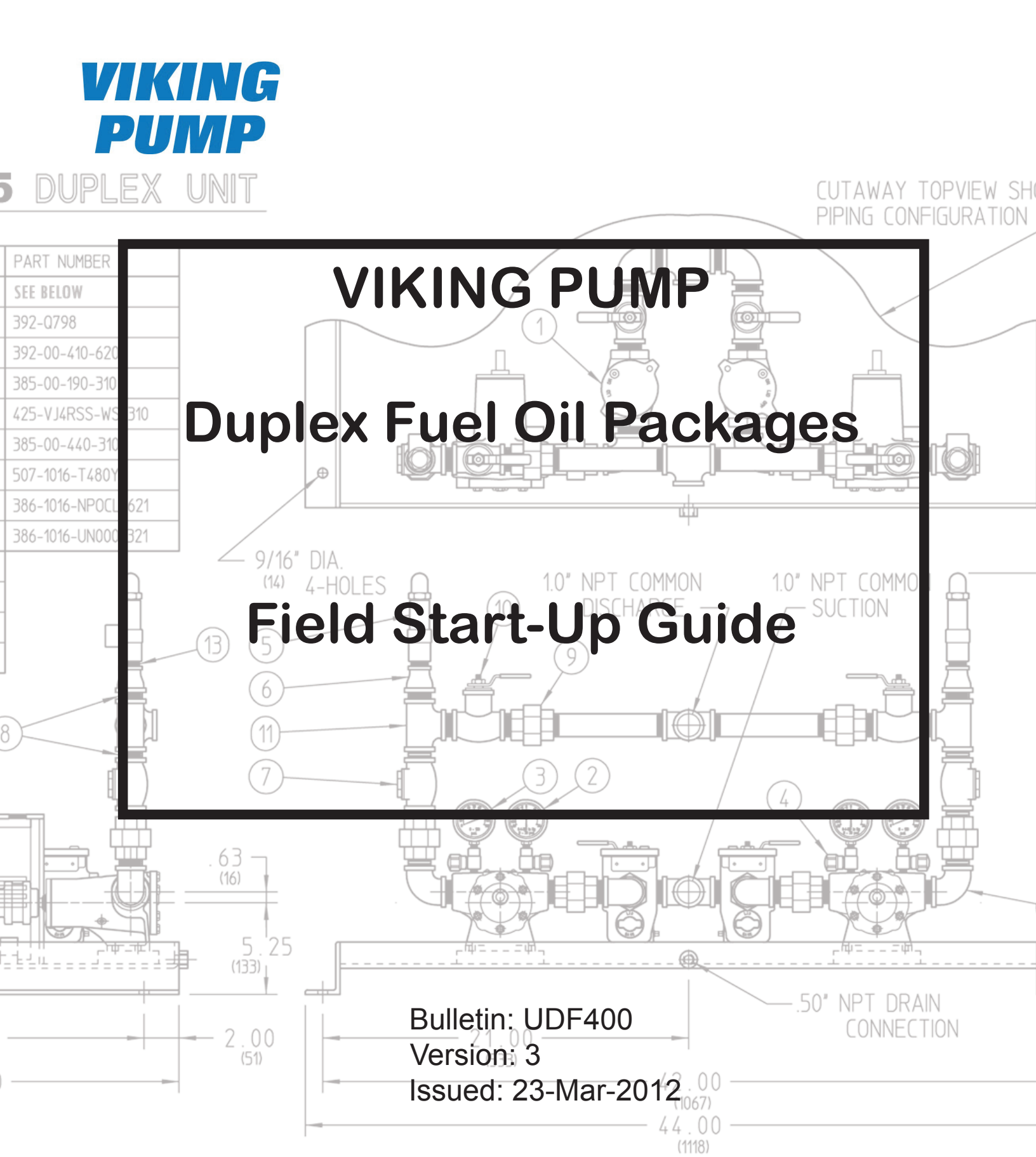

Bulletin: UDF400
Version: 3
Issued: 23-Mar-2012

IDEX CORPORATION

VIKING PUMP

Viking Duplex Fuel Oil Package Field Start-Up Guide

Before arriving on job site, make sure you have:

- ☐ A copy of the approved drawing or certified print of the Duplex Fuel Oil Pump Package
- ☐ A copy of the approved drawing of the Control Panel.
- ☐ Read all of the instructions, notes, and suggestions in this bulletin to become familiar with the start-up procedures. If you have any questions or require clarification please contact our systems specialist, Scott Ludschuweit at (519) 259-4249 (or North America toll free at 1-888-845-7867 ext. #4249)

When you arrive at the site confirm the following:

- ☐ Check the name plate rating on the Control Panel and compare with the incoming voltage and motor ratings.
- ☐ The compound gauge should be located on the pump suction or in the suction header (depending on pump size and duplex package configuration layout).
- ☐ The pressure gauge should be on the discharge of the pump or in the discharge header (depending on pump size and duplex package configuration layout).
- ☐ Examine the suction header and confirm that the arrow cast into suction strainer points toward the pump suction.
- ☐ Confirm the sales order number stamped on the serial number plate matches the packing slip. The serial number plate is typically located on the base plate of the unit.
- ☐ On the control panel confirm the voltage, phase, horsepower, certifications and part number stamped on the serial number plate located on the door of the panel match the specifications. Do not open the panel door.

Observations to be made on site:

General Installation

- ☐ The package should be anchor to the ground to prevent movement. If the unit is mounted on a shelf it should be properly bolted.
- ☐ All piping (suction, discharge and relief return lines) should be externally supported to prevent pipe stresses being transferred to the unit. Ideally flexible connections should be used.

Suction Piping

- ☐ If possible follow the suction pipe to the supply tank. The suction line should go around obstacles instead of over them. This is to prevent air lock (the system will not prime if the suction line is air locked).
- ☐ If there are any valves on the suction line they should be in the open position.
- ☐ With long suction pipe there should be a hand operated pump to evacuate the air from the suction line. This pump should be piped parallel to the duplex package.
- ☐ The relief valves piping can not be piped back into the suction piping. Both valves can be piped to a common pipe. But that pipe has to be piped back to the supply tank. There should not be any other valves in this line. If there is any they should be always in the open position.

Discharge Piping

- ☐ The discharge will be piped into a day tank or directly into the diesel generator or boiler depending on the installation.
- ☐ If possible follow the discharge pipe. If there are any valves on the discharge line they should be in the open position.
- ☐ Take a look at the day tank. There should be the line from the duplex pump unit, overflow and floats.

©2012 VIKING PUMP, INC., All Rights Reserved

DIMENSIONAL DRAWING FH-432 INLINE DUPLEX UNIT

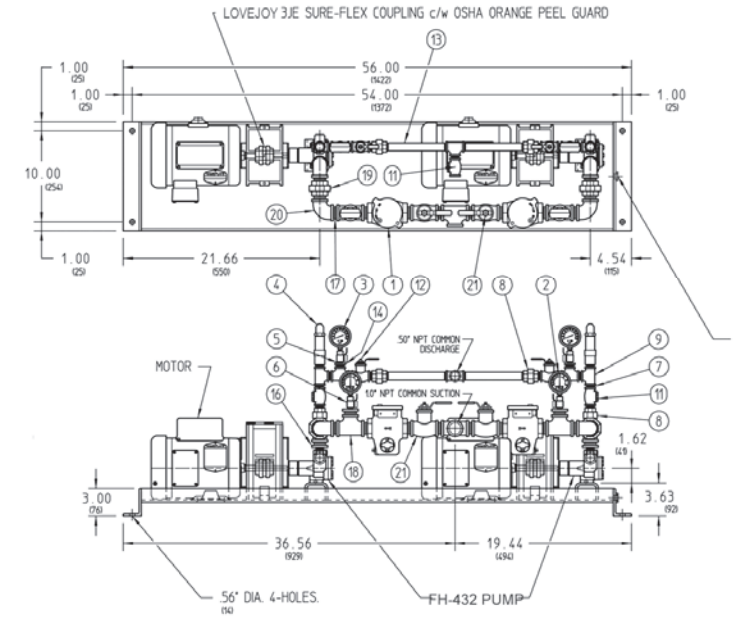

PIPING FOR INLINE FH-432 DUPLEX UNIT

ITEM	DESCRIPTION	PART No	QTY
1	STRAINER 1.0" NPT	SEE CHART BELOW	
2	COMPOUND GUAGE 30"-0-30 PSI LIQUID FILLED 2.5" FACE X .25" NPT	392-0798	2
3	PRESSURE GUAGE 0-200 PSI LIQUID FILLED 2.5" FACE X .25" NPT	392-0806	2
4	FULFLO R.V. 1.0" NPT c/w SS SPRING	425-VJSR4WS-310	2
5	.25" NPT CLOSE NIPPLE	385-00-222-310	4
6	.25" NPT BRONZE BALL VALVE	385-00-190-310	4
7	50" NPT CLOSE NIPPLE	385-00-320-310	15
8	50" NPT UNION	386-1008-UN000-321	4
9	50" NPT TEE	386-1008-EN000-321	5
10	50" NPT X 3.0" LONG NIPPLE	386-1008-NP048-620	2
11	50" NPT BRONZE SPRING CHECK VALVE	507-1008-61-103-81	3
12	50" NPT BRONZE BALL VALVE	507-1008-T586-70	2
13	50" SCH. 40 PIPE SA 53	386-1008-PP000-621	20"
14	50" MALE X .25" FEMALE NPT HEX REDUCING BUSHING	386-1008-BU004-321	2
15	1.0" MALE X .25" FEMALE NPT HEX REDUCING BUSHING	386-1016-BU004-321	2
16	1.0" MALE X .50" FEMALE NPT HEX REDUCING BUSHING	386-1016-BU008-321	2
17	1.0" NPT CLOSE NIPPLE	386-1016-NPOCL-621	12
18	1.0" NPT TEE	507-1016-T111	3
19	1.0" NPT UNION	386-1016-UN000-321	2
20	1.0" NPT ELBOW	386-1016-ES000-321	4
21	1.0" NPT BRONZE BALL VALVE	507-1016-T586-70	2

DIMENSIONAL DRAWING GG-4195 DUPLEX UNIT

ITEM	DESCRIPTION	PART NUMBER
1	STRAINER	SEE BELOW
2	COMPOUND GUAGE 30"-0-30 PSI LIQUID FILLED 2.5" FACE X .25" NPT	392-0798
3	PRESSURE GUAGE 0-200 PSI LIQUID FILLED 2.5" FACE X .25" NPT	392-00-410-620
4	.25" NPT BALL VALVE	385-00-190-310
5	FULFLO R.V. 3/4" NPT c/w GREEN-WS SPRING 30 - 100 PSI	425-VJ4RSS-WS-310
6	1.0" NPT FEMALE - 3/4" NPT FEMALE BELL REDUCER	385-00-440-310
7	1.0" NPT BRONZE SPRING CHECK VALVE	507-1016-T480Y
8	1.0" NPT CLOSE NIPPLE	386-1016-NPOCL-621
9	1.0" NPT UNION	386-1016-UN000-321
10	1.0" NPT BRONZE BALL VALVE	507-1016-T585-7066
11	1.0" NPT TEE	386-1016-EN000-321
12	1.0" NPT ELBOW	386-1016-ES000-321
13	3/4" NPT CLOSE NIPPLE	385-00-395-310

PIPES AND NIPPLES ARE CARBON STEEL, SCH. 40
FITTINGS ARE 150 PSI BLACK MALLEABLE IRON SCREWED
PIPING IS LEAK TESTED WITH SOAP/WATER - 100 PSI AIR

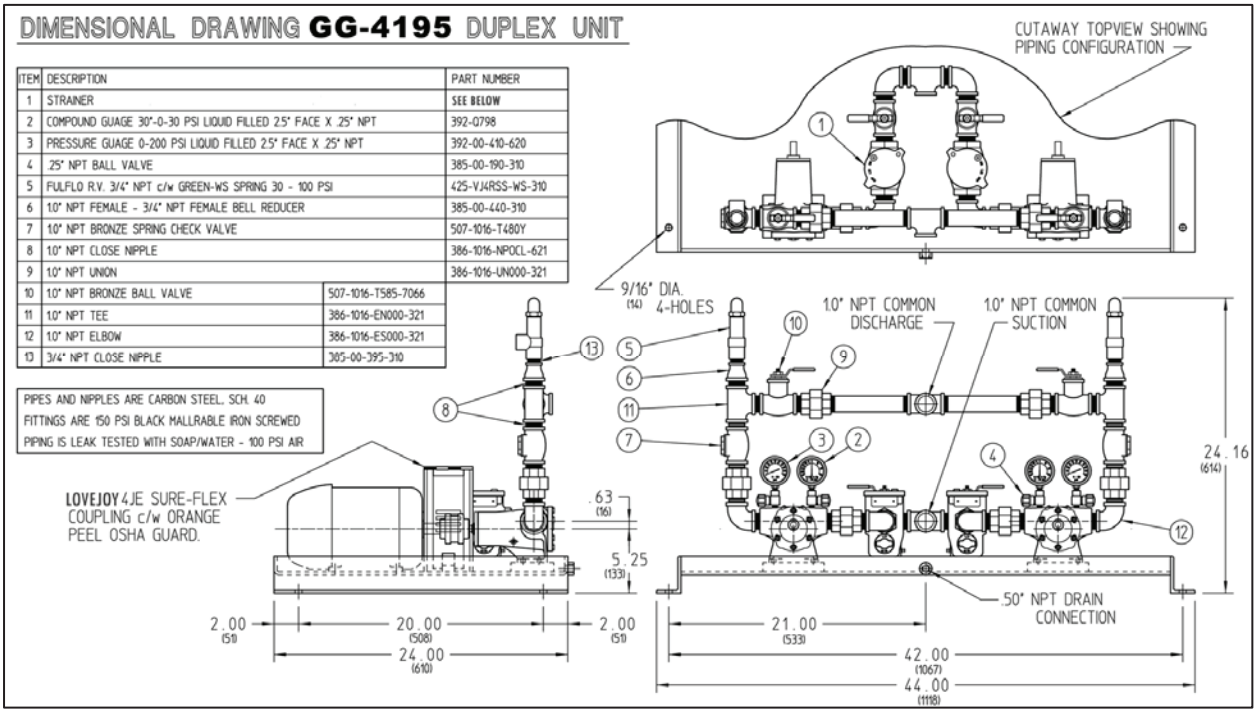

©2012 VIKING PUMP, INC., All Rights Reserved

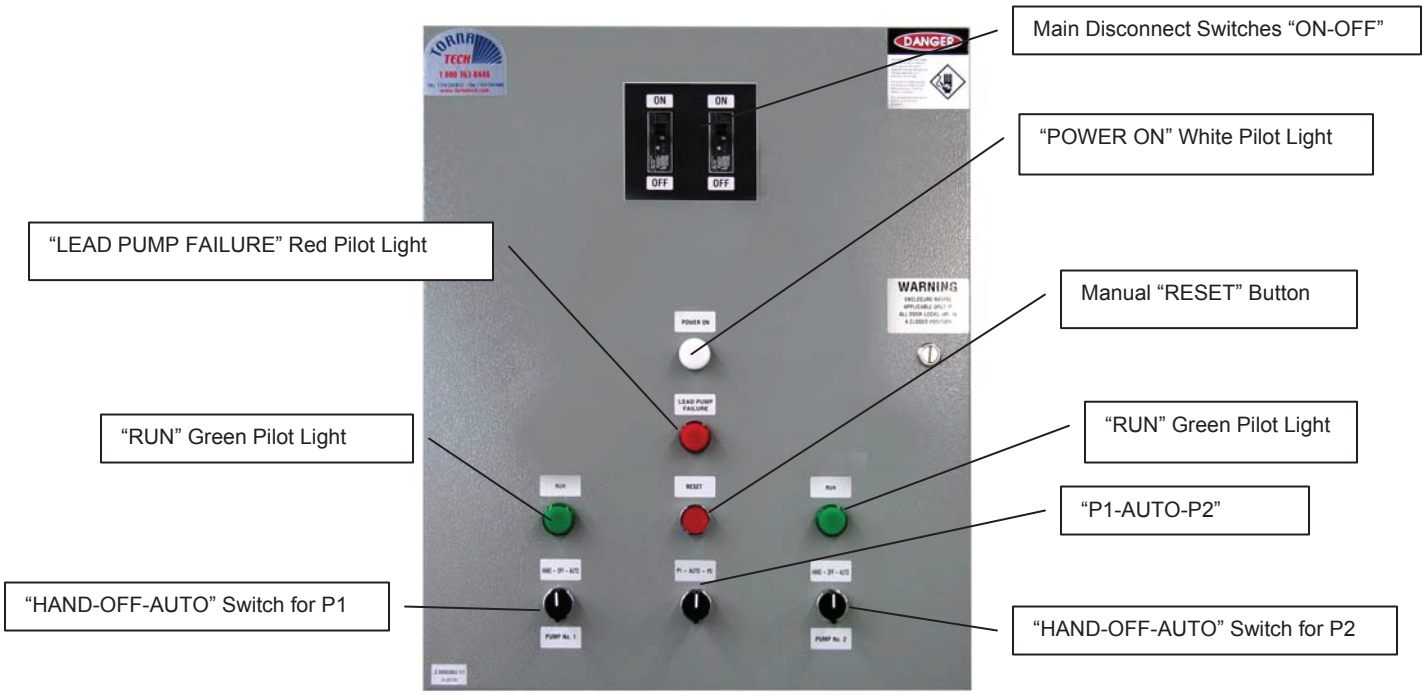

Fig. 3 – Typical Control Panel Cover

Priming the Duplex Fuel Oil Package:

1. On the Control Panel make sure both the Main Disconnect “ON-OFF” switches are in the “OFF” position (power off).

2. Take a look at the suction gauge to see if there is any pressure on the suction line. If there is pressure and the application is not a flooded suction the suction line is pressurized. Carefully remove the drain plug from the basket strainer to release the compressed air.

3. Turn the four ball valves connected to the pressure gauges (suction & discharge gauges) to closed position.

4. Remove the thumbscrew from top of the lid of the basket strainers, rotate the lid counter clockwise until the pin hits and stops, and then remove lid.

5. Open the suction valves.

6. Fill the strainers with diesel (the suction valves should be in open position, as you fill one strainer the liquid level will flow in the other strainer).

7. Reinstall the lid with the tab of the lid just to the left of the boss with the body, rotate the lid clockwise until the holes line up, and reinsert the thumbscrew.

8. Both the suction and discharge ball valves should be in open position.

©2012 VIKING PUMP, INC., All Rights Reserved

9. On the Control Panel, turn the “Hand-Off-Auto” selector switches to “Off” position for both P1 and P2.

10. Turn both the Main Disconnect “On-Off” switches to “ON” position (power on).

11. Turn the “P1-Auto-P2” switch to “P1” position.

12. Have some one observe the motor fan for the next operation.

13. For P1 turn “Hand-Off-Auto” selector switch to “Hand” position and P1 will start.

14. After approximate 3 seconds turn the “Hand-Off-Auto” selector switch for P1 back to “Off” position.

15. Confirm that the motor fan had spun in the proper rotation. If the motors are not rotating properly have an electrician switch the motor leads and check again the rotation of the motors.

16. Repeat steps 11 to 15 for P2.

17. Turn the four ball valves connected to the pressure gauges (suction & discharge gauges) to the open position.

18. For P1 turn “Hand-Off-Auto” selector switch to “Hand” position and P1 will start.

19. Observe the suction compound gauge; it should start pulling a vacuum. The discharge gauge will read 0 psi. Run P1 for no more than 2 minutes then turn it off. Place you hand on the pump (around the seal area) and if it starts heating up, turn off the pump to prevent mechanical seal failure.

20. When the pumps are primed and pumping the discharge gauge will show a positive pressure.

NOTE: If the suction line is long you may have to refill the basket strainer again. Before this is done the suction valves will have to be in the closed position, other wise the vacuum will be lost. Then alternate running P1 and P2 in manual mode.

NOTE: Some local codes specify a anti-siphon valve to be installed on the suction line. It is usually installed close to the main supply tank. In some cases this valve will prevent the pumps from priming. If the pumps don’t prime after a few attempts ask the contractor to loosen the spring in the anti-siphon valve and then after the pumps are primed the spring can be set in order to meet local codes.

NOTE: If the installation has a flooded suction, turn the suction and discharge valves to the open position. The suction pressure gauge should show a positive pressure. If it doesn’t follow the suction line to the supply tank and see if all the valves are open. If all the valves are open and the pressure gauges don’t read a positive pressure there a blockage in the line. The blockage will have to be cleaned before running the pumps.

©2012 VIKING PUMP, INC., All Rights Reserved

CONTROL PANEL

- Check the name plate rating of the Control Panel and compare with the incoming line voltage and the motors ratings.
- Adjust overload relay setting to full current rating
- Check that motor protector push actuator(s) is (are) in start position.
- Check that float switches are adjusted to the desired levels
- Check that the controller is properly connected to the pump motors
- If motors are rotating in the proper direction (as checked in steps 10 to 16 under Priming section), and all the above checks out correctly, turn the “Hand-Off-Auto” switches for both P1 and P2 to the “Auto” position.
- Activate float switches manually and test if the pumps start and stop at desired levels.
- Once the level falls below the start lead pump level float switch FL2 (as shown in diagram under Float Controls), the pump motor is energized and the lead pump starts pumping fuel into the tank.
- If the lead pump has failed and the level falls below FL2 start lead pump level float switch, the “Lead Pump Failure” red pilot light is turned on and the lag pump motor is energized so that the lag pump keeps pumping fuel into the fuel tank.
- In order to turn off the “Lead Pump Failure” red pilot light, the manual “Reset” red pushbutton must be pressed.
- Once the level reaches the stop all pumps level float switch FL3, the pump motors are de-energized and the pumps stop.
- If the alternation selector switch “P1-Auto-P2” is in the “Auto” position, the stop all pumps float switch FL3 triggers the alternator and reverses the order of the lead and lag pumps. For example, if P1 was the lead pump before the trigger, P2 will become the lead pump after the trigger.

RELIEF VALVES

Checking Relief Valves Current Setting

1. With the pump running notice the reading on the discharge pressure gauge.
2. Slowly close the discharge ball valve.
3. Operate only one pump at a time in manual mode.
4. The reading on the discharge pressure gauge will increase.
5. Make a note of the pressure reading when the valve is fully closed; this value is the pressure relief valve setting. It should be approximate 15 to 20 psi greater than the specified pump discharge pressure.
6. Open the discharge valve and turn the pump off.
7. If the pressure relief setting in satisfactory, repeat for the other pump.

©2012 VIKING PUMP, INC., All Rights Reserved

Setting the Pressure Relief Valves

1. Turn the “Hand-Off-Auto” switches to “OFF” for both P1 and P2.
2. Remove the cap (item J) of the pressure relief valve for pump P1.
3. Loosen the lock nut (item F)
4. Turn the adjusting screw (item C) clockwise to increase the pressure setting or counterclockwise to decrease the pressure setting
5. Tighten the lock nut (item J)
6. Reinstall the cap (item B) onto the valve.
7. Turn the “Hand-Off-Auto” switch for P1 to “HAND” position.
8. Slowly close the discharge ball valve for P1. If the pressure relief setting is not satisfactory repeat the operation to adjust the adjusting screw.
9. Repeat steps 1 to 8 for pump P2.

SYM.	NAME
A	BODY
B	CAP (O-RING SEAL)
C	ADJUSTING SCREW
D	RETAINER
E	O-RING †
F	LOCK NUT
G	SPRING †
H	STOP RING
I	PISTON †
J	CAP (GASKET SEAL)
K	GASKET †

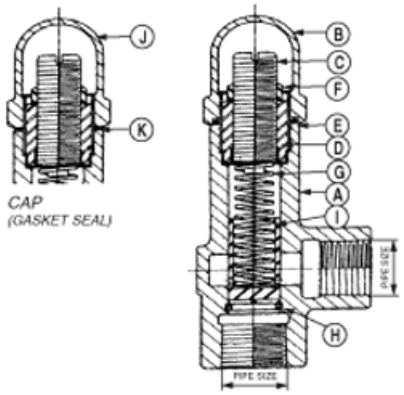

FLOAT CONTROLS

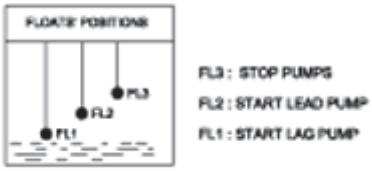

The standard duplex control panel contains NC relays to operate three float switches (switches supplied by others) for the day tank. If more than three floats are required, the control panel would have to be ordered with optional NC relays.

The top float (FL3) stops both pumps, the middle float (FL2) starts the lead pump and the bottom float (FL1) starts the lag pump.

It may not be practical to fill the day tank to test the operation of the panel. A simpler way is to have the electrician simulate the open and closing contacts of the floats to check the operation sequence. This procedure can be used to check the high and low level alarms (if supplied) in the panel. The electrician can check the conductivity of the float (normally open or normally closed) to see if they are the same as specified. In some cases there is no day tank and the pump duplex unit pumps directly into the diesel generator or boiler. The panel will receive the signal from the generator and start the lead pump.

©2012 VIKING PUMP, INC., All Rights Reserved

PRESSURE SWITCHES

If the duplex unit is supplied with pressure switches (either single or dual stage) they will be installed on the discharge line. The pressure setting will be factory set, but they are field adjustable.

To simulate a low pressure condition on the discharge line, have the control panel on automatic mode and then close the discharge valve of the pump running. The relief valve will open and the pumping liquid will return to the supply tank. The pump will shut down and a red light will come on the panel, the time will be that is set on the timer.

It is difficult to simulate an actual high pressure shut down. Have the electrician simulate by open or closing the contacts in the control panel.

Field adjustment of the pressure setting can be done by the following:

Single Stage Pressure Switch – ASCO 502- PA10A-RE10A21

- See UDF400-1 Single Stage Pressure Switch.pdf

Dual Stage Pressure Switch – ASCO – SC10D-TG10A21

- See UDF400-2 Dual Stage Pressure Switch.pdf

FLOW SWITCHES

If the duplex unit is supplied with a flow switch it will be installed on the discharge line. To simulate a low flow condition on the discharge line, have the control panel on automatic mode and then close the discharge valve of the pump running (either P1 or P2). The relief valve will open and the pumping liquid will return to the supply tank. Within a few minutes (usually 1 to 3 minutes) based on the time set on the timer, the control panel will start the other pump and the “Low Flow” Signal red lights (optional equipment required for installation of low flow switch) will light up on the panel.

©2012 VIKING PUMP, INC., All Rights Reserved

TROUBLESHOOTING

1. No discharge pressure.
    a. Verify Priming Procedure. (Strainers primed, proper motor rotation)
    b. Verify Relief Valve setting procedure.
    c. To test each pump individually. Close valves on pump not being tested. Run pump to be tested and slowly close discharge valve. If pressure increases then there is flow from that pump. Turn pump off and close valves and repeat process for other pump. If gauge still has little to no reading then the operating pressure (especially on short distances) might be 1-5 psi only and not measurable on gauge.
    d. To prove this; run one pump and close off a valve downstream (if available) and pressure should rise to the Relief Valve set point.
2. Panel Alarms
    a. Panel must run in AUTO mode to assure correct operation.
    b. PLC timers run through their time settings or false alarms may show.
    c. Manually jumping floats and pressure/flow switches in the panel is sometimes the only way to test setting due to the design of the entire generator system.
    d. If actual operating pressure is lower than the specified operating pressure located in the title block of the drawing. Confirm that the pressure/flow switches, min and max operating parameters, operate within this range. If the operating pressures do fall within the switches range, then manual adjustments can be made as outlined in the Field Start-Up Guide.
3. Fluid leaking from a small hole located below the pump near the seal.
    a. This is to indicate that the seal has failed and is usually caused by a dry run condition.

A Viking pump that is properly installed and maintained will give long and satisfactory performance.
NOTE: Before making any pump adjustment or opening the pump liquid chamber in any manner, make sure that:

1) Any pressure in the pumping chamber has been vented through the suction or discharge lines or other openings provided for this purpose,
2) The driver has been "locked out" so that it cannot inadvertently be started while work is being done on the pump and
3) The pump has been allowed to cool down to the point where there is no chance of anyone being burned.

If trouble does develop, one of the first steps toward finding the difficulty is to *install a vacuum gauge in the suction port and a pressure gauge in the discharge port*. Readings on these gauges often will give a clue as to where to start looking for the trouble.

Vacuum Gauge - Suction Port

1. High reading would indicate -

a). Suction line blocked - foot valve stuck, gate valve closed, strainer plugged.
b). Liquid too viscous to flow through the piping.
c). Lift too high.
d). Line too small.

2. Low reading would indicate -

a). Air leak in suction line.
b). End of pipe not in liquid.
c). Pump is worn.
d). Pump is dry - should be primed.

©2012 VIKING PUMP, INC., All Rights Reserved

3. Fluttering, jumping, or erratic reading -

a). Liquid vaporizing.
b). Liquid coming to pump in slugs, possibly an air leak insufficient liquid above the end of the suction pipe.
c). Vibrating from cavitation, misalignment, or damage parts.

Pressure Gauge - Discharge Port

1. High reading would indicate -

a). High viscosity and small and/or long discharge line.
b). Gate valve partially closed.
c). Filter plugged.
d). Vertical head did not consider a high specific gravity liquid.
e). Line partially plugged from build up on inside of pipe.
f). Liquid in pipe not up to temperature.
g). Liquid in pipe has undergone a chemical reaction and has solidified.
h). Relief Valve set too high.

2. Low reading would indicate -

a). Relief valve set too low.
b). Relief valve poppet not seating properly.
c). Bypass around the pump partially open.
d). Too much extra clearance.
e). Pump worn.

3. Fluttering, jumping, or erratic reading -

a). Cavitation.
b). Liquid coming to pump in slugs.
c). Air leak in suction line.
d). Vibrating from misalignment or mechanical problems.

Some of the following may also help pinpoint the problem:

A). Pump does not pump.

1. Lost its prime - air leak, low level in tank, foot valve stuck.
2. Suction lift too high.
3. Rotating in wrong direction.
4. Motor does not come up to speed.
5. Suction and discharge valves not open.
6. Strainer clogged.
7. Bypass valve open, relief valve set too low, relief valve poppet stuck open.
8. Pump worn out.
9. Any changes in the liquid system, or operation that would help explain the trouble, e.g. new source of supply, added more lines, inexperienced operators, etc.
10. Too much end clearance.
11. Head position incorrect.

B). Pump starts, then loses its prime.

1. Supply tank empty.
2. Liquid vaporizing in the suction line.
3. Air leaks or air pockets in the suction line; leaking air through packing or mechanical seal.
4. Worn out.

©2012 VIKING PUMP, INC., All Rights Reserved

C). Pump is noisy.

1. Pump is being starved (heavy liquid cannot get to pump fast enough). Increase suction pipe size or reduce length.
2. Pump is cavitating (liquid vaporizing in the suction line). Increase suction pipe size or reduce length; if pump is above the liquid, raise the liquid level closer to the pump; if the liquid is above the pump, increase the head of liquid.
3. Check alignment.
4. May have a bent shaft or rotor tooth. Straighten or replace.
5. Relief valve chatter; increase pressure setting.
6. May have to anchor base or piping to eliminate or reduce vibration.
7. May be a foreign object trying to get into the pump through the suction port.

D). Pump not up to capacity.

1. Starving or cavitating - increase suction pipe size or reduce length.
2. Strainer partially clogged.
3. Air leak in suction piping or along pump shaft.
4. Running too slowly; is motor the correct speed and is it wired up correctly.
5. Bypass line around pump partially open.
6. Relief valve set too low or stuck open.
7. Pump worn out.
8. Too much end clearance.
9. Head position incorrect.

E). Pump takes too much power.

1. Running too fast - Is correct motor speed, reducer ratio, sheave size, etc. being used?
2. Is liquid more viscous than unit sized to handle; heat the liquid, increase the pipe size, slow the pump down, or get a bigger motor.
3. Discharge pressure higher than calculated, check with pressure gauge. Increase size or reduce length of pipe, reduce speed (capacity), or get bigger motor.
4. Packing gland drawn down too tight.
5. Pump misaligned.
6. Extra clearance on pumping elements may not be sufficient for operating conditions. Check parts for evidence of drag or contact in pump and increase clearance where necessary.

F). Rapid Wear.

On most applications the pump will operate for many months or years before it gradually loses its ability to deliver capacity or pressure. Examination of such a pump would show a smooth wear pattern on all parts. Rapid wear, occurring in a few minutes, hours or days, shows up as heavy grooving, galling, twisting, breaking or similar severe signs of trouble. (see Rapid Wear Chart below)

©2012 VIKING PUMP, INC., All Rights Reserved

RAPID WEAR

	CAUSE	EVIDENCE	POSSIBLE SOLUTION
1.	**ABRASIVES**	Gouges or marks made by large, hard particles; a rapid wearing away of bushings from very small abrasives similar to pumice; or anything in between.	Flush the system with the pump removed. Install strainer in suction line. Oftentimes after a system has run for a few cycles or a few days the dirt is pretty well cleaned out and if the pump is rebuilt into good condition it will then last for a long time.
2.	**CORROSION**	Rust, pitting or metal appears to be "eaten" away.	Check the Viking General Catalog Liquid List for materials of construction recommendation. Consider whether all of the materials used in pump construction were attacked; consider other materials used in the system to determine how they resisted the liquid. Check to see whether or not the liquid has been contaminated to make it more corrosive than anticipated.
3.	**EXCEEDING OPERATING LIMITS**	Noisy operation, broken bushings, twisted shaft, parts show evidence of high heat (discoloration).	Review General Catalog for operating limits on particular model involved.
4.	**INSUFFICIENT EXTRA CLEARANCE**	Pump may stall. Evidence of heavy contact between end of rotor teeth and head or other parts.	Increase end clearance and/or contact your distributor or the factory with details of the application so that information regarding proper extra clearance may be provided.
5.	**LACK OF LUBRICATION**	Noisy bearings, localized heating at bearings or lip seal, smoke, rapid bushing wear.	Be sure all grease fittings are greased before starting and instructions for lubrication of drive equipment are followed; consider use of auxiliary lubricating equipment.
6.	**MISALIGNMENT**	Wear on only one part of a surface, e.g., one side of the casing, one side of the packing gland, only a portion of the face of the head.	Double check alignment of drive equipment and piping. Check the alignment under conditions as close to operating conditions as possible.
7.	**RUN DRY**	Pump stalls because parts have uneven expansion caused by frictional heat; galling between surfaces having relative motion; seal seats and idler pins changing colour because of high heat.	Be sure there is liquid in the system at the time of start up. Provide some kind of automatic alarm or shut-off if supply tank runs dry.

©2012 VIKING PUMP, INC., All Rights Reserved

PREVENTATIVE MAINTENANCE

Performing a few preventative maintenance procedures will extend the life of your pump and reduce the overall cost of ownership.

A). Lubrication - Grease all grease nipples after every 500 hours of operation or after 60 days, whichever occurs first. If service is severe, grease more often. Do it gently with a hand gun. Use a NLGI #2 grease for normal applications. For hot or cold applications use appropriate grease. See Engineering Service Bulletin ESB-515.

B). End Clearance Adjustment - After long service the running clearance between the end of the rotor teeth and the head may have increased through wear to the point where the pump is losing capacity or pressure. Resetting end clearance will normally improve pump performance. See TSM on particular model series for procedure on adjusting end clearance for pump involved.

C). Examine Internal Parts - Periodically remove the head, examine idler and bushing and head and pin for wear. Replacing a relatively inexpensive idler bushing and idler pin after only moderate wear will eliminate the need to replace more expensive parts at a later date. See TSM on particular model series for procedure in removing head of the pump. Be sure idler does not slide off idler pin as head is removed and drop and hurt someone or damage the part.

D). Cleaning the Pump - A clean pump is easier to inspect, lubricate, adjust, and runs cooler; plus, it looks better.

E). Storage - If pump is to be stored, or not used for six months or more, pump must be drained and a light coat of non-detergent SAE 30 weight oil must be applied to all internal pump parts. Lubricate fittings and apply grease to pump shaft extension. Viking suggests rotating pump shaft by hand one complete revolution every 30 days to circulate the oil. Retighten all gasketed joints before using the pump.

DO'S AND DON'TS -

Do's and Don'ts for installation, operation, and maintenance of Viking pumps to assure safe, long, trouble-free operation.

INSTALLATION -

1. Do install pump as close to supply tank as possible.
2. Do leave working space around the pumping unit.
3. Do use large, short, and straight suction piping.
4. Do install a strainer in the suction line.
5. Do double check alignment after the unit is mounted and piping is hooked up.
6. Do provide a pressure relief valve for the discharge side of the pump.
7. Do cut out the center of gaskets used as port covers on flanged port pumps.
8. Do record pump model number and serial number and file for future reference.

OPERATION -

1. Don't run pump at speeds faster than shown in the catalogue for your model.
2. Don't require pump to develop pressures higher than those shown in the catalogue for your model.
3. Don't operate pumps at temperatures above or below limits shown in the catalogue for your pump.
4. Don't operate pumps without all guards being in place.
5. Don't operate pump without a relief valve on the pump or in the discharge piping; be sure valve is mounted and set correctly.

©2012 VIKING PUMP, INC., All Rights Reserved

6. Don't exceed catalogue limits for temperature and pressures of fluids in jacketed areas of pump.
7. Don't use the pump in a system, which includes a steam blow or an air or vapour blow or purge **without** provision for over-speed shutdown in case the pump starts to act as a turbine and over-speeds the drive.
8. Don't operate the pump with all of the liquid bypassing through a pump mounted internal type relief valve or without any flow of liquid going through the pump for more than a couple of minutes. Operation under either of these conditions may result in a heat build-up in the pump, which could cause hazardous conditions or happenings.

MAINTENANCE -

1. Do make sure any pump that has residual system pressure in it or that has handled high vapour pressure liquids, e.g., LP-gas, ammonia, Freons, etc. has been vented through the suction or discharge lines or other openings provided for this purpose.
2. Do make sure that if the pump is still hooked to the driver while maintenance is being performed that the driver has been "locked out" so that it cannot be inadvertently started while work is being done on the pump.
3. Do make sure any pump that has handled a corrosive, flammable, hot, or toxic liquid has been drained, flushed, vented and/or cooled before it is disassembled.
4. Don't drop parts during disassembly, e.g., idler can slip from the pin as the head is removed from the pump; it may drop on your foot, plus, it may get nicked or gouged.
5. Don't stick fingers in the ports of a pump! Serious injury may result.
6. Don't spin the idler on the idler pin! Fingers may be jammed between teeth and crescent.
7. Do remember that a few simple preventative maintenance procedures such as periodic lubrication, adjustment of end clearance, examination of internal parts, etc., will extend the service life of your pump.
8. Do **obtain**, read and keep maintenance instructions furnished with your pump.
9. Do have spare parts, pumps or standby units available, particularly if the pump is an essential part of a key operation or process.

©2012 VIKING PUMP, INC., All Rights Reserved

VIKING PUMP

WARRANTY

Viking warrants all products manufactured by it to be free from defects in workmanship or material for a period of one (1) year from date of startup, provided that in no event shall this warranty extend more than eighteen (18) months from the date of shipment from Viking. If, during said warranty period, any products sold by Viking prove to be defective in workmanship or material under normal use and service, and if such products are returned to Viking's factory at Windsor, Ontario, transportation charges prepaid, and if the products are found by Viking to be defective in workmanship or material, they will be replaced or repaired free of charge, FOB. Windsor, Ontario.

Viking assumes no liability for consequential damages of any kind and the purchaser by acceptance of delivery assumes all liability for the consequences of the use or misuse of Viking products by the purchaser, his employees or others. Viking will assume no field expense for service or parts unless authorized by it in advance.

Equipment and accessories purchased by Viking from outside sources which are incorporated into any Viking product are warranted only to the extent of and by the original manufacturer's warranty or guarantee, if any.

THIS IS VIKING'S SOLE WARRANTY AND IS IN LIEU OF ALL OTHER WARRANTIES, EXPRESSED OR IMPLIED, WHICH ARE HEREBY EXCLUDED, INCLUDING IN PARTICULAR ALL WARRANTIES OF MERCHANTABILITY OR FITNESS FOR A PARTICULAR PURPOSE. No officer or employee of IDEX Corporation or Viking Pump Canada is authorized to alter this warranty.

IDEX CORPORATION

©2012 VIKING PUMP, INC., All Rights Reserved

INSTALLATION AND MAINTENANCE INSTRUCTIONS

TRIPOINT® switches

ADJUSTABLE DEADBAND COMPACT LINE SWITCHES OPEN FRAME, GENERAL PURPOSE OR WATERTIGHT SWITCH ENCLOSURES

SERIES

PA10, PA11, PA16
PA20, PA21, PA26
PA30, PA31, PA36

Form No. P7032

DESCRIPTION

The Adjustable Deadband Compact Line Switch is of rugged aluminum alloy construction. The switch may be provided with a General Purpose NEMA Type 1 Switch Enclosure, a Watertight NEMA Type 3 and 4 Switch Enclosure or an open-frame switch.

The compact line switch may be supplied as a complete unit, that is, the switch assembly unit and the transducer (either pressure, temperature or mechanical transducer) completely assembled or as separate units to be assembled upon installation. The actuation (set) point and the reactuation (reset) point are each independently adjustable over the full range of the switch. The switch assembly can be mated with a wide selection of interchangeable pressure, temperature and mechanical transducers to cover a broad range of pressures, fluids, temperatures and mechanical movements. The switch will control electrical circuits in response to changes in pressure, temperature or mechanical signals.

IMPORTANT: This sheet is designed to cover the installation and use of this switch on pressure transducers, temperature transducers and mechanical transducers. Review this sheet and select the paragraphs that apply to your particular installation and application. Throughout the sheet, the word "signal" will be used in place of pressure, temperature or mechanical changes.

INSTALLATION

Check the nameplate for the correct catalog number, pressure range, temperature range, media and rated over range pressure or temperature. Nameplates are located on cover and on the bottom of the transducer. Check to be sure the third digit in each number is the same. If not, the unit should not be used. (Refer to Figure 2)

IMPORTANT: All internal adjustments have been made at the factory. Any adjustment, alteration or repair to the internal parts of the switch other than stated herein voids all warranties. Signal setting adjustments required are made by the two adjusting nuts on the top of the switch.

TEMPERATURE LIMITATIONS

Maximum ambient temperature is 60°C (140°F). Maximum fluid temperature is 82°C (179°F). For steam service, the fluid temperature with a pigtail (syphon tube or condensate loop) installed directly into the transducer will be below 82°C (179°F). For higher ambient and fluid temperature limitations, consult factory.

ASSEMBLY OF SWITCH AND TRANSDUCER UNITS (Refer to Figure 2)

IMPORTANT: The switch unit and transducer unit may be provided as a complete assembly or as separate units. If separate units are provided, refer to Form No. P7033 for a complete listing of switch unit and transducer unit combinations. Form No. P7033 is provided to insure that the proper switch unit be assembled to the proper transducer unit.

Pay careful attention to exploded view provided in Figure 2 for assembly of switch unit and transducer unit. Proceed in the following manner:

1. CAUTION: The third digit in the catalog number on both the switch unit and the transducer unit must be identical. If not, do not assemble to each other. If the same, proceed.
2. Remove bolts (4) from base of switch unit. On general purpose or watertight constructions, remove switch cover.
3. Remove instruction label and pressure, temperature or mechanical switch range scale from the transducer unit.
4. Place transducer unit on base of switch unit and assemble. Start bolts (4) approximately two turns by hand to avoid the possibility of cross threading. After initial engagement, torque bolts (4) in a crisscross manner to 80 ± 10 inch-pounds.
5. Remove backing paper from range scale and install on the front of the switch body over the left opening and between the two slots with the adjusting indicator points.

POSITIONING

Switch may be mounted in any position.

MOUNTING

For mounting dimensions for general purpose switch enclosures, refer to Figure 3. For all switches, an optional mounting bracket is available. For mounting bracket mounting dimensions, refer to Figure 6.

PIPING/TUBING (PRESSURE TRANSDUCER)

Adequate support of piping and proper mounting of switch should be made to avoid excessive shock or vibration. To minimize the effect of vibration on a switch, mount perpendicular to vibration. Connect piping or tubing to switch at base of transducer. It is recommended that flexible tubing be used whenever possible. Apply pipe compound sparingly to male pipe threads only. If applied to transducer threads, it may enter the transducer and cause operational difficulty. Pipe strain on switch should be avoided by proper support and alignment of piping. When tightening pipe, do not use switch as a lever. Wrenches applied to transducer body or piping are to be located as close as possible to connection point. **IMPORTANT: For steam service, install a condensate loop (pigtail or steam syphon tube) directly into the pressure transducer.**

CAUTION: To avoid damage to the transducer body, DO NOT OVERTIGHTEN PIPE CONNECTIONS. If TEFLON* tape, paste or similar lubricant is used, use extra care due to reduced friction.

*DuPont's Trademark for its TFE-fluorocarbon Resin.

IMPORTANT: To eliminate the effect of undesirable pressure fluctuations in the system, install a surge supressor.

WIRING

Wiring must comply with Local and National Electrical Codes. The general purpose switch enclosure is provided with a 7/8 diameter hole to accommodate 1/2 inch electrical hub or connector. It is recommended that a flexible conduit connection be used. If rigid conduit is used, do not consider it or use it as a means of supporting (mounting). For watertight switch enclosures, a watertight conduit hub must be installed in the 7/8 diameter hole, use conduit hub Part No. PP01 or equivalent. IMPORTANT: Electrical load must be within range stated on nameplate. Failure to stay within the electrical range of the switch rating may result in damage to or premature failure of the electrical switch. Number 14 AWG wire is recommended. CAUTION: Do not exert excessive screwdriver force on snap switch when making terminal connections. When connections are made, be sure there is no stress on the wire leads. Either condition may cause malfunction of switch.

STANDARD SWITCH AND OPTIONAL SWITCH SUFFIX "J" ATMOSPHERE SEALED ELECTRICAL RATING

5 Amps Res., 125, 250 VAC
1/8 HP 125 VAC
1/4 HP 250 VAC
1/2 Amp Res., 125 VDC
1/4 Amp Res., 250 VDC

OPTIONAL SWITCH SUFFIX "H" HERMETICALLY SEALED ELECTRICAL RATING

25 AMPS Resistive
10 AMPS Inductive
5 AMPS Motor
3 AMPS Lamp
AT 28 VDC

1 AMP 125 VAC

SCHEMATIC FOR STANDARD, SUFFIX "H" AND SUFFIX "J" SWITCHES

SPDT

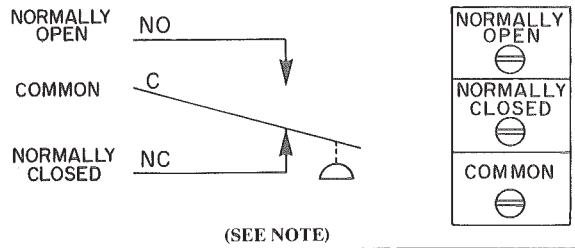

(SEE NOTE)

NOTE: Terminal Connections (C, NC & NO) on snap switch are located differently than shown in the schematic above. Common "C" is located at the bottom. Normally Closed "NC" is located in the center. Normally Open "NO" is located at the top.

INSTALLATION OF TEMPERATURE TRANSDUCERS

(Refer to Figure 5)

DIRECT PROBE

The Direct Probe (local) Temperature Transducer is provided with 1/2 inch N.P.T. connection. When installing, do not use switch unit as a lever for tightening. Use wrenching flats provided at base of transducer for tightening.

CAPILLARY AND BULB

The Capillary and Bulb (remote) Temperature Transducers are provided with a length of capillary and a 3/8 inch diameter sensing bulb. CAUTION: Do not bend capillary at sharp angles. For proper operation, be sure sensing bulb is completely immersed in fluid and not in contact with heating element or anything that would directly affect the temperature of the fluid being sensed.

Form No. P7032 PRINTED IN U.S.A. 1978 Automatic Switch Co. FLORHAM PARK, NEW JERSEY 07932

© Automatic Switch Co. 1978, ALL RIGHTS RESERVED

THERMAL WELL (Optional Feature)

A Thermal Well may be used for Capillary and Bulb (remote) or Direct Probe (local) Temperature Transducers. The thermal well affords protection for the sensing bulb and allows removal of the sensing bulb while maintaining a pressure-tight vessel. When installing sensing bulb in thermal well, be sure that it is fully inserted. Where a thermal well already exists, jam nuts may be obtained to adapt the capillary and bulb to the existing thermal well. The existing thermal well must be for a 3/8 diameter sensing bulb.

UNION CONNECTOR (Optional Feature)

A union connector will allow direct mounting of the sensing bulb in the fluid being controlled. Install union into piping connection before tightening union onto bulb. For maximum performance, the bulb should be inserted in the union connection so that the end of the sensing bulb is even with the end of the union connector nut. Do not apply excessive torque when tightening union connector nut.

ADJUSTMENT (SIGNAL SETTING) OF ADJUSTABLE DEADBAND SWITCH

When facing switch in the upright position, the adjusting nut on the highest point controls the high signal setting. The adjusting nut at the lowest point controls low signal setting (Refer to Figure 1). To make adjustments, a 1/4 wrench and a pressure or temperature gage (within suitable range) are required. If electrical connection (to line of final application) of the switch is not desirable, a battery powered test lamp or ohm meter may be used. Pressure, temperature or mechanical range scales should be used for initial signal settings. These will be accurate within 5%. Adjust switch until pointer is in the middle of the solid red line below the desired range. For exact signal settings, proceed as follows:

ADJUSTMENT (SIGNAL SETTING) OF NORMALLY CLOSED AND NORMALLY OPEN ADJUSTABLE DEADBAND SWITCH INCREASING SIGNAL (Refer to Figure 1)

1. If the adjustable deadband switch is in the line of final application when adjustment (signal setting) is made, be sure switch can be test operated without affecting other equipment.
2. On general purpose and watertight constructions, remove switch cover.
3. Turn low adjustment nut until low signal setting indicator is fully down. Turn high adjustement nut until high signal setting indicator is fully up. Use a 1/4 inch wrench for adjusting nuts. **CAUTION: Adjusting nut will turn easily until it hits a stop. Do not over torque; over torquing may cause damage.**
4. Follow steps in chart below to make signal settings.

Steps of Adjustment	Normally Closed		Normally Open	
	Electrical Connection To Switch	Position Of Test Lamp On-Off	Electrical Connection To Switch	Position Of Test Lamp On-Off
1. Starting at zero signal, connect test lamp to common and . . .	Normally Closed Terminal	On	Normally Open Terminal	Off
2. Apply desired actuation signal. Then back off high signal adjusting nut until switch actuates.	Normally Closed Terminal	Off (Switch Open)	Normally Open Terminal	On (Switch Closed)
3. Lower signal to desired reactuation signal. Then advance low signal adjusting nut until switch reactuates.	Normally Closed Terminal	On (Switch Closed)	Normally Open Terminal	Off (Switch Open)

5. Cycle between two desired signals and make minor adjustments to nuts as required to achieve exact signal settings.
6. After settings have been made, make permanent electrical connections. **WARNING: Be sure power is off when electrical connections are made.**

ADJUSTMENT (SIGNAL SETTING) OF NORMALLY CLOSED AND NORMALLY OPEN ADJUSTABLE DEADBAND SWITCH DECREASING SIGNAL (Refer to Figure 1)

1. If the adjustable deadband switch is in the line of final application when adjustment (signal settings) is made, be sure switch can be test operated without affecting other equipment
2. On general purpose and watertight constructions, remove switch cover.
3. Turn low adjustment nut until low signal setting indicator is fully down. Turn high adjustment nut until high signal setting indicator is slightly beyond desired actuation setting. Use a 1/4 inch wrench for adjusting nuts. **CAUTION: Adjusting nut will turn easily until it hits a stop. Do not over torque; over torquing may cause damage.**
4. Follow steps in chart below to make signal settings.

Steps of Adjustment	Normally Closed		Normally Open	
	Electrical Connection To Switch	Position Of Test Lamp On-Off	Electrical Connection To Switch	Position Of Test Lamp On-Off
1. Starting with initial signal above desired actuation, connect test lamp to common and . . .	Normally Closed Terminal	Off	Normally Open Terminal	On
2. Decrease signal to desired actuation signal. Then advance low adjusting nut until switch actuates.	Normally Closed Terminal	On (Switch Closed)	Normally Open Terminal	Off (Switch Open)
3. Apply desired reactuation signal. Then back off high signal adjusting nut until switch reactuates.	Normally Closed Terminal	Off (Switch Open)	Normally Open Terminal	On (Switch Closed)

5. Cycle between two desired signals and make minor adjustments to nuts as required to achieve exact signal settings.
6. After settings have been made, make permanent electrical connections. **WARNING: Be sure power is off when electrical connections are made.**

TESTING OF INSTALLATION

If the adjustment of the switch has been made outside of the line of final application, the switch should be retested when installed in the line of final application. Follow adjustment instructions. Be sure switch can be test operated without affecting other equipment.

MAINTENANCE

WARNING: Turn off electrical power supply and line pressure to switch before removal or inspection.

IMPORTANT: Repair of the switch shall never be attempted in the field. The switch must be returned to the factory (Automatic Switch Company, Florham Park, New Jersey) or serviced only by an authorized factory representative. Address all service inquires to Automatic Switch Company, 50-56 Hanover Road, Florham Park, New Jersey 07932. The only adjustments which may be performed on the switch is changing positions of high and low signal adjusting nuts and replacement of the transducer unit. Replacement of transducer should be done if external leakage is evident.

PREVENTIVE MAINTENANCE

1. While in service, operate (cycle between two desired signals) the adjustable deadband switch at least once a month to insure proper operation. If necessary, electrical wiring and pipe connection should be made so that switch can be test operated without affecting other equipment.
2. Periodic inspection of the switch, external surfaces only, should be carried out. Switch should be kept clean and free from paint, foreign matter, corrosion, icing and freezing conditions.
3. Keep the medium entering the switch as free from dirt and foreign material as possible.

IMPROPER OPERATION

Switch will not actuate or actuates and reactuates undesirably.

1. **Incorrect Electrical Connection:** Check leads to switch. Be sure they are properly connected. Switch is marked "NO" for Normally Open, "NC" for Normally Closed and "C" for Common.
2. **Faulty Control Circuit:** Check electrical power supply to switch. Check for loose or blow-out fuses, open-circuited or grounded wires, loose connections at terminal block or switch. See nameplate for electrical rating and range.
3. **Incorrect Pressure:** Check pressure in system with suitable pressure gage. Pressure must be within range specified on nameplate.
4. **Incorrect Adjustment:** Check high and low adjusting nuts for proper setting. Refer to adjustment instructions.
5. **External Leakage:** Check to see that bolts (4) holding transducer to pressure switch are properly torqued (80 ± 10 inch-pounds). If bolts are tight and leakage is still evident, replace transducer. Refer to paragraph on "Assembly of Switch Unit and Transducer Unit."
6. **Excessive Vibration or Surges Causing Switch to Actuate and Reactuate:** Check for fluctuations in system and install pressure surge suppressor. Check switch mounting and be sure there is no excess vibration.
7. **Incorrect Temperature:** Check temperature in system with suitable thermometer. Temperature must be within range specified on nameplate. Check location of capillary and bulb for incorrect mounting. Refer back to paragraphs on "Installation of Temperature Transducers."

If the operation of the adjustable deadband switch cannot be corrected by the above means, the entire switch unit should be replaced or an authorized factory representative consulted.

FOR SERVICE, REPLACEMENT OR NEW TRANSDUCER
Consult Factory or Authorized Factory Representative or Distributors

ORDERING INFORMATION
For Adjustable Deadband Switch or New Transducer
When Ordering, Specify Catalog Numbers, Fluid, Pressure Range, Temperature Range, Serial Numbers and Maximum Sustained Pressure or Temperature.

NAMEPLATES ARE LOCATED ON SWITCH COVER AND BOTTOM OF TRANSDUCER.

ASCO® Automatic Switch Co. FLORHAM PARK, NEW JERSEY 07932 Form No. P7032 PRINTED IN U.S.A. 1978

© Automatic Switch Co. 1978 ALL RIGHTS RESERVED

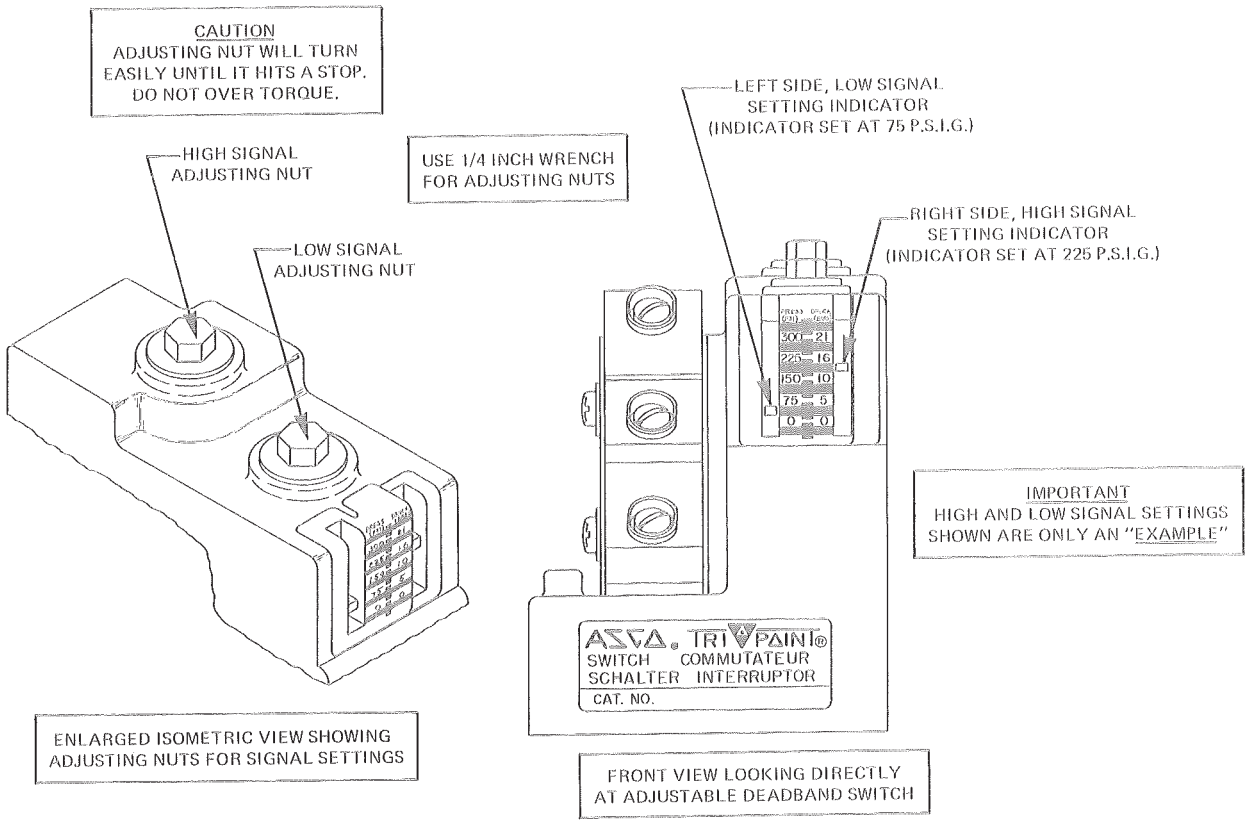

Figure 1. **Adjustment (Signal Setting) of Adjustable Deadband Switch**

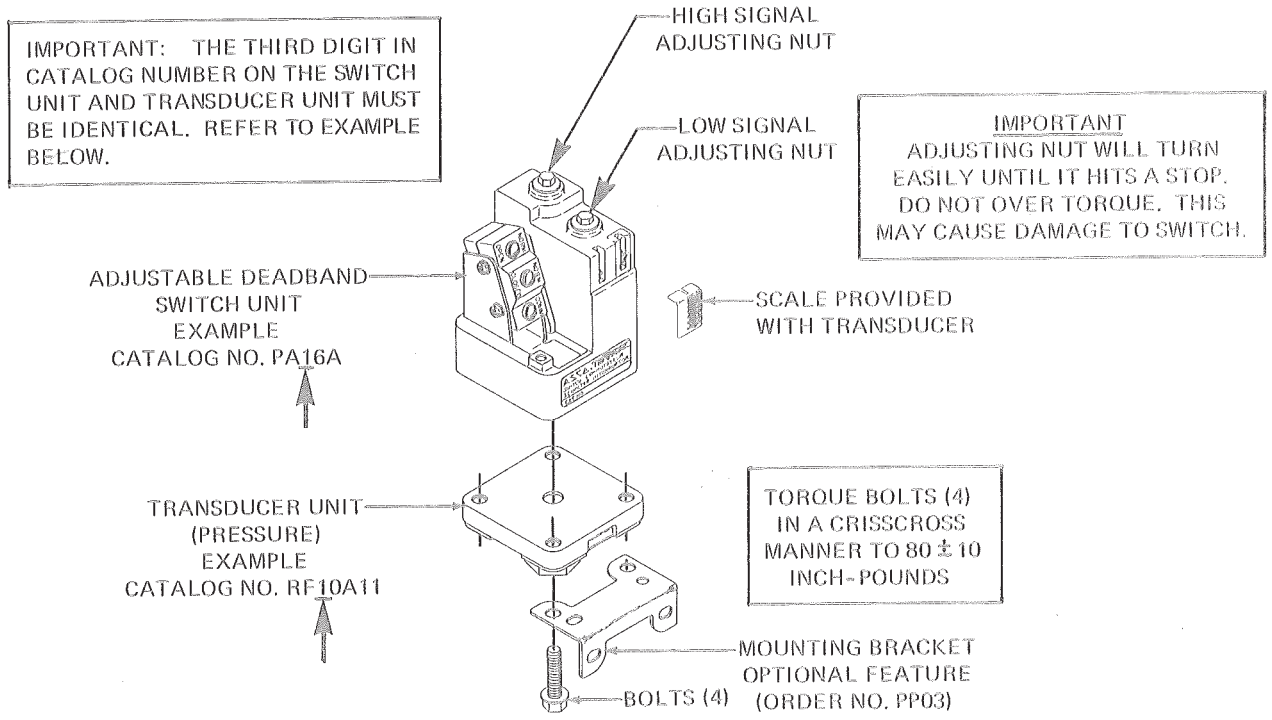

Figure 2. **Open Frame Switch (Switch Unit and Transducer Unit to be Assembled)**

© Automatic Switch Co. 1978 ALL RIGHTS RESERVED

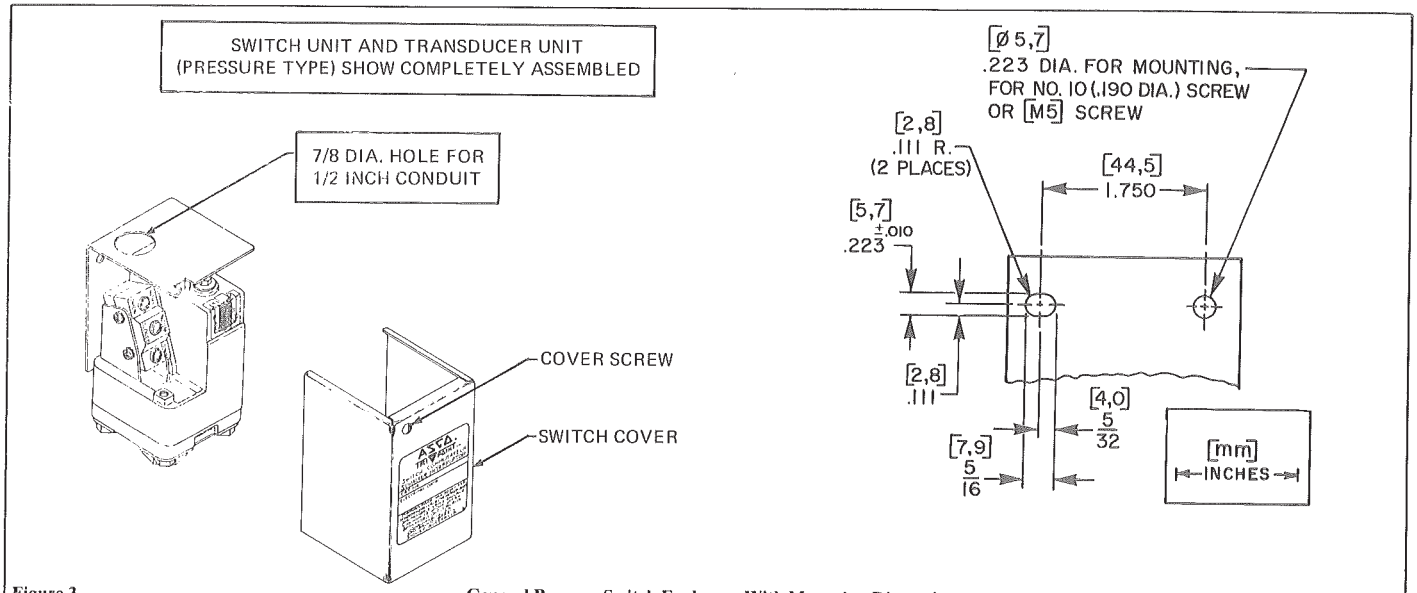

Figure 3. General Purpose Switch Enclosure With Mounting Dimensions

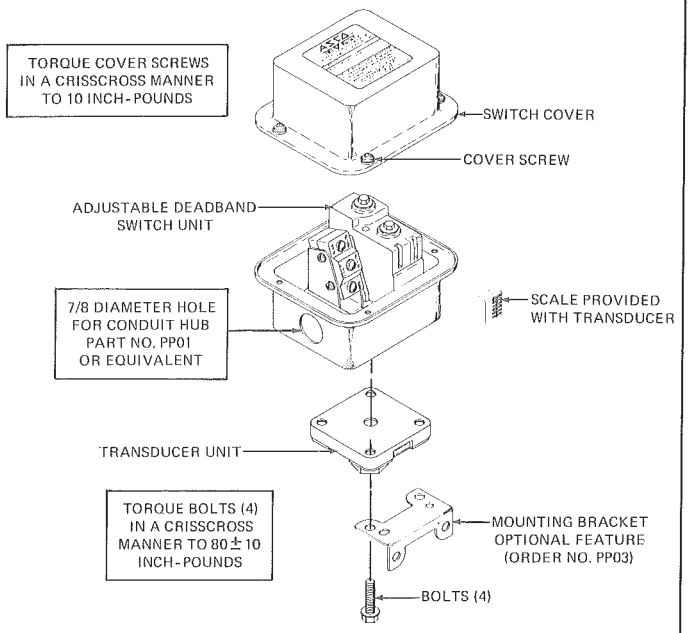

Figure 4. Watertight Switch Enclosure

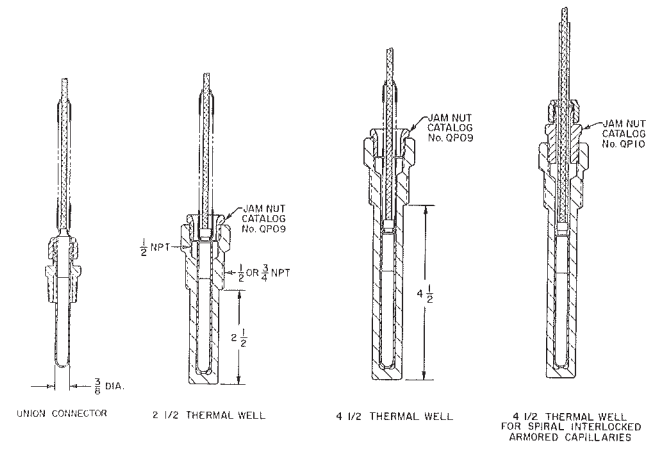

Figure 5. Union Connector and Thermal Wells (Optional Feature)

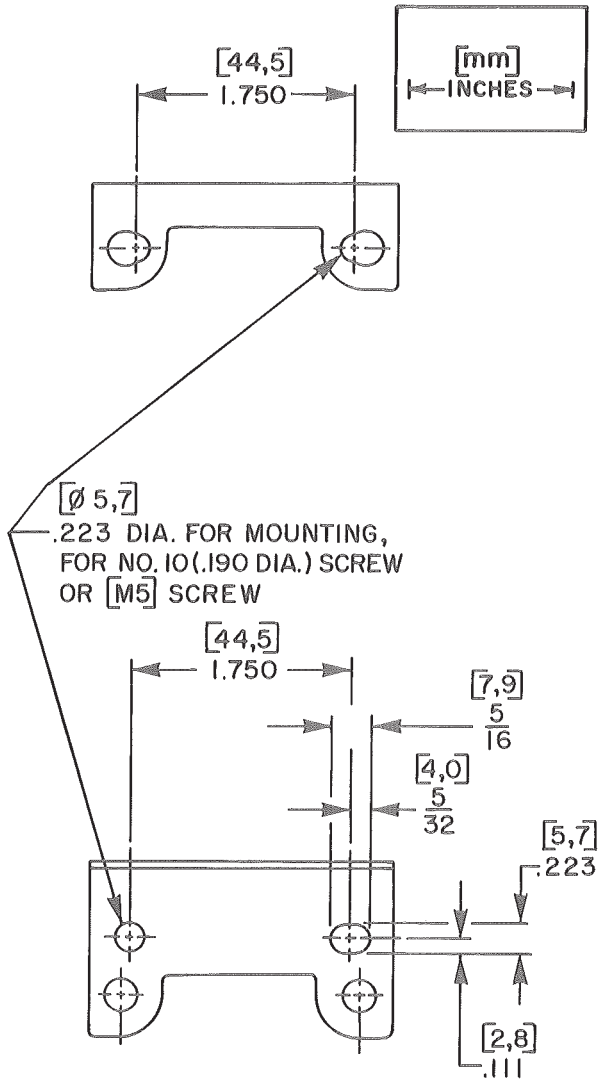

Figure 6. Mounting Bracket (Optional Feature)

ASCO® Automatic Switch Co. FLORHAM PARK, NEW JERSEY 07932 Form No. P7032 PRINTED IN U.S.A. 1978

© Automatic Switch Co. 1978, ALL RIGHTS RESERVED

Installation & Maintenance Instructions

ASCO® TRIPOINT® SWITCH UNITS

TWO–STAGE DUAL ADJUSTMENT SWITCH UNIT WITH GENERAL PURPOSE, WATERTIGHT, OR EXPLOSIONPROOF SWITCH ENCLOSURE

SC–SERIES

Form No.V5736R2

DESCRIPTION

The SC–Series Two–Stage Dual Adjustment Switch Units are used with transducer units to make Tripoint Pressure Switches or Temperature Switches. The switch units are made of aluminum alloy and designed for rugged industrial use. The switch units have a general purpose, watertight, or explosionproof enclosure. All wiring terminals, adjustments, and visual scales are accessible from the front of the switch.

The switch may be supplied as a complete unit or with the switch unit and transducer completely assembled. The components may be separate units to be assembled upon installation. There are two electrical snap switches with independently adjustable actuation (set)points, adjustable over the full range of the switch. The reactuation(reset) point of each electrical snap switch is fixed with respect to the actuating point setting for that switch. The switch assembly can be mated with a wide selection of pressure or temperature transducers to cover a broad range of pressures, fluids, or temperatures. The switch will control electrical circuits in response to changes in pressure or temperature.

IMPORTANT: These instructions cover the installation and use of this switch on pressure and temperature transducers. Select the paragraphs that apply to your particular installation and application. The word *signal* is used in place of pressure or temperature changes.

INSTALLATION

Check the nameplate for the correct catalog number, pressure range, temperature range, media, and proof pressure or temperature. Never apply incompatible fluids or exceed the pressure or temperature rating of the switch. Installation and inspection to be performed by qualified personnel.

Nameplates are located on cover and on the bottom of the transducer. Check to be sure the third digit in each number is the same. If not, the unit should not be used. (Refer to Figure 3).

IMPORTANT: All internal adjustments have been made at the factory. Any adjustment, alteration or repair to the internal parts of the switch other than stated herein voids all warranties. The signal setting adjustments required are made by the adjusting nut on the outside of the switch.

Temperature Limitations

Ambient temperature limits are — 4°F(—20°C) to 140°F (60°C). To determine fluid temperature limitations, see form No.V5794 for Pressure Transducer catalog numbers and construction materials, then refer to chart below.

TRANSDUCER CONSTRUCTION MATERIALS	RATINGS FLUID TEMPERATURE
Buna N or Neoprene	–4°F(–20°C) to 179°F(82°C)
VITON*	–4°F(–20°C) to 250°F(121°C)
316 Stainless Steel	–50°F(–45°C) to 300°F(149°C)

For steam service, the fluid temperature with a pigtail (siphon tube or condensate loop) installed directly into the transducer will be below 179°F (82°C).

Assembly of Switch and Transducer Units

IMPORTANT: The switch unit and transducer unit may be provided as a complete assembly or as separate units. If separate units are provided refer to Form No. V5794 for a complete listing of switch unit and transducer unit combinations. Form No.V5794 is provided to ensure that the proper switch unit is assembled to the proper transducer unit. Pay careful attention to exploded views provided in Figure 3 for assembly of switch unit and transducer unit. Proceed in the following manner:

⚠ **CAUTION: The third digit in the catalog number on both the switch unit and transducer unit must be identical. If not, do not assemble to each other. If the same proceed.**

1. Remove special instructions label and switch range scales from transducer unit.
2. For watertight and explosionproof construction place gasket on base of switch unit.
3. Place transducer unit on base of switch unit and assemble. Insert four bolts and torque bolts in a crisscross manner to 80 ± 10 in–lbs [9,0 ± 1,1 Nm].
4. Remove backing paper from range scale and install scale on the switch body behind adjusting nut. The scale is slotted to fit over a raised boss on the body. See Figure 1.

Positioning

Switch may be mounted in any position.

Mounting

Figure 1 shows partial view of switch body for mounting dimensions.

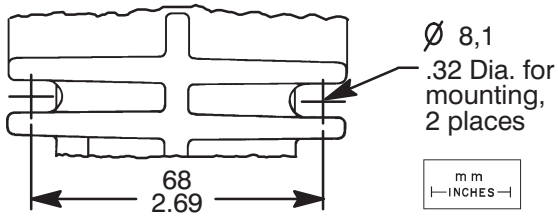

Figure 1. Mounting locations

Piping/Tubing (Pressure Transducer)

Adequate support of piping and proper mounting of switch should be made to avoid excessive shock or vibration. To minimize the effect of vibration on a switch, mount perpendicular to vibration. Connect piping or tubing to switch at base of transducer. It is recommended that flexible tubing be used whenever possible. Apply pipe compound sparingly to male pipe threads only. If applied to female threads, it may enter the transducer and cause operational difficulty. Avoid pipe strain on switch by properly supporting and aligning piping. When tightening pipe, do not use switch as a lever. Wrenches applied to transducer body or piping are to be located as close as possible to connection point.

IMPORTANT: For steam service, install a condensate loop (pigtail or steam syphon tube) directly into the pressure transducer.

⚠ **CAUTION: To avoid damage to the transducer body, DO NOT OVERTIGHTEN PIPE CONNECTIONS. If TEFLON* tape, paste or similar lubricant is used, use extra care due to reduced friction.**

IMPORTANT: To eliminate undesirable pressure fluctuations in the system, install a surge suppressor.

*DuPont's Registered Trademark

© Automatic Switch Co. MCMXCI All Rights Reserved.

Wiring

Wiring must comply with local codes and the National Electrical Code. All switch enclosures are provided with two 3/4″ NPT conduit hubs with one plugged when not in use. It is recommended that a flexible conduit connection be used. If rigid conduit is used, do not consider it or use it as a means of support (mounting). For general purpose and watertight construction, the switch cover is removed by loosening two screws then twisting slightly and lifting. For explosionproof construction, the cover unscrews. When explosionproof cover is replaced, torque cover to 135 ± 10 in−lbs [10,7 ± 1,1 Nm]. Use No. 14 AWG copper wire rated for 60°C minimum. All switches have a grounding screw and clamp in the enclosure. For factory wired switch, black lead is common, red lead is normally open, blue lead is normally closed, and the green lead wire is a ground.

IMPORTANT: Electrical load must be within range stated on nameplate. Failure to stay within the electrical range of the switch rating may result in damage to or premature failure of electrical switch.

⚠ **CAUTION: Do not exert excessive screw driver force on snap switch when making terminal connections. When connections are made, be sure there is no stress on the wire leads. Either condition may cause malfunction of switch.**

ELECTRICAL RATINGS		
Switch Unit	Ratings for Limit Controls and Pressure Operated Switches	Ratings for Industrial Controls and Temperature Indicating and Regulating Equipment
Standard Switch Rating	5 Amps Res.,125/250 VAC 1/8 HP 125 VAC 1/4 HP 250 VAc 0.4 Amp Res., 125 VDC	15 Amps Res., 125 VAC 10 Amps Res., 250 VAC 1/4 HP 125 VAC 1/2 HP 250 VAC 1/2 Amp Res., 125 VDC 1/4 Amp Res., 250 VDC

Schematic

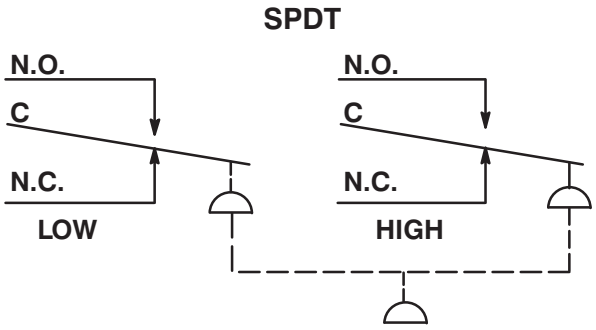

INSTALLATION OF TEMPERATURE TRANSDUCERS

Direct Probe

The direct probe (local) temperature transducer is provided with 1/2″ NPT connection. When installing, do not use switch unit as a lever for tightening. Use wrenching flats provided at base of transducer for tightening.

Capillary and Bulb

The capillary and bulb (remote) temperature transducers are provided with a length of capillary and a 3/8″ diameter sensing bulb.

⚠ **CAUTION: Do not bend capillary at sharp angles. For proper operation, be sure sensing bulb is completely immersed in fluid and not in contact with heating element or anything that would directly affect the temperature of the fluid being sensed.**

Thermal Well (Optional Feature)

A thermal well may be used for capillary and bulb (remote) or direct probe (local) temperature transducers. The thermal well affords protection for the sensing bulb and allows removal of the sensing bulb while maintaining a pressure tight vessel. When installing sensing bulb in thermal well, be sure that it is fully inserted. Where a thermal well already exists, jam nuts may be obtained to adapt the capillary and bulb to the existing thermal well. The existing thermal well must be for a 3/8″ diameter sensing bulb.

Union Connector (Optional Feature)

A union connector will allow direct mounting of the sensing bulb in the fluid being controlled. Install union into piping connection before tightening union onto bulb. For maximum performance, the bulb should be inserted in the union connection so that the end of the sensing bulb is even with the end of the union connector nut. Do not apply excessive torque when tightening union connector nut.

Adjustment (Signal Setting) of Two−Stage Dual Adjustment Switch

To make adjustments, (signal setting) a 7/16″ wrench and a pressure or temperature gage (within suitable range) are required. If electrical connection (to line of final application) of the switch is not desirable, a battery powered test lamp or ohm meter may be used. Pressure or temperature range scales should be used for initial signal setting. These will be accurate within 5%. Loosen lock ring and turn adjusting nut until red line is even with the desired range. For exact signal setting, proceed as follows:

⚠ **WARNING: To prevent the possibility of personal injury or property damage, turn off electrical power when making permanent electrical connections to switch.**

Adjustment (Signal Setting) of Normally Closed or Normally Open Switch, *Increasing Signal* (Refer to Figure 2)

1. If the switch is in the line of final application when adjustment (signal setting) is made, be sure switch can be test operated without affecting other equipment.
2. Loosen lock ring on adjustment nut and turn low signal adjustment nut full upwards and high signal adjustment full down using a 7/16″ wrench.

⚠ **CAUTION: Adjusting nut will turn easily until it hits a stop. Do not over torque; over torquing may cause internal damage resulting in malfunction.**

3. Remove switch cover to gain access to snap switch. See section on *Wiring* for cover removal.
4. Follow the steps in the chart below to make signal setting:

Adjustment Procedure	NORMALLY CLOSED		NORMALLY OPEN	
	Switch Terminal	Test Lamp On−Off	Switch Terminal	Test Lamp On−Off
1. Starting at zero signal, connect test lamp to common .	NC	On (Closed Circuit)	NO	Off (Open Circuit)
2. Apply desired actuation signal. Then back off signal adjusting nut until switch actuates.	NC	Off (Open Circuit)	NO	On (Closed Circuit)
3. Lower signal to desired reactuation signal.	NC	On (Closed Circuit)	NO	Off (Open Circuit)

5. Cycle between signal settings and make minor adjustments to adjusting nuts as required to achieve the exact signal setting.
6. After setting has been made, make permanent electrical connections.

ASCO Valves Automatic Switch Co. 50−60 Hanover Road, Florham Park, New Jersey 07932

Adjustment (Signal Setting) of Normally Closed or Normally Open Switch, *Decreasing Signal*

(Refer to Figure 2)

1. If the switch is in the line of final application when adjustment (signal setting) is made, be sure switch can be test operated without affecting other equipment.

2. Loosen lock ring on adjustment nuts and turn low signal adjustment nut full upwards and high signal adjustment nut slightly beyond desired actuation setting using a 7/16″ wrench.

⚠ **CAUTION: Adjustment nut will turn easily until it hits a stop. Do not over torque; over torquing may cause internal damage resulting in malfunction.**

3. Remove switch cover to gain access to snap switch. See section on *Wiring* for cover removal.
4. Follow steps in chart below to make signal setting.

Adjustment Procedure	NORMALLY CLOSED		NORMALLY OPEN	
	Switch Terminal	Test Lamp On–Off	Switch Terminal	Test Lamp On–Off
1. Starting with initial signal above desired actuation setting, connect test lamp to common.	NC	Off (Open Circuit)	NO	On (Closed Circuit)
2. Decrease signal to desired actuation signal. Then advance adjusting nut until switch actuates.	NC	On (Closed Circuit)	NO	Off (Open Circuit)
3. Increase signal to check reactuation signal.	NC	Off (Open Circuit)	NO	On (Closed Circuit)

5. Cycle between actuation and reactuation signals and make minor adjustment to adjusting nuts as required to achieve the exact signal settings.
6. After settings have been made, tighten lock rings and make permanent electrical connections.

Testing of Installation

If the adjustment of the switch has been made outside of the line of final application, the switch should be retested when installed in the line of final application. Follow adjustment instructions. Be sure switch can be test operated without affecting other equipment.

MAINTENANCE

⚠ **WARNING: To prevent the possibility of personal injury or property damage, turn off electrical power and depressurize switch unit before inspection or removal.**

IMPORTANT: Switch is not field repairable. The switch must be returned to the factory (Automatic Switch Company, Florham Park, New Jersey) or serviced only by an authorized factory representative. Address all service inquiries to Automatic Switch Company, 50–60 Hanover road, Florham Park, New Jersey 07932, Valve Service Department. The only maintenance which may be performed on the two stage dual adjustment switch is changing the setting of the adjusting nut and replacement of the transducer unit. Replacement of transducer should be done only if external leakage is evident.

Preventive Maintenance

- While in service, operate the switch (cycle between desired signals) at least once a month to insure proper operation. If necessary, electrical wiring and pipe connection should be made so that switch can be test operated without affecting other equipment.
- Periodic inspection of the switch, external surfaces only, should be carried out. Switch should be kept clean and free from paint, foreign matter, corrosion, icing, and freezing conditions.
- Keep the medium entering the transducer as free as possible from dirt and foreign material.

Causes of Improper Operation

Switch will not actuate or actuates and reactuates undesirable.

- **Incorrect Electrical Connection:** Check leads to switch. Be sure they are properly connected. Switch is marked *NO* for Normally Open, *NC* for Normally Closed and *C* for Common.
- **Faulty Control Circuit:** Check electrical power supply to switch. Check for loose or blown fuses, open–circuited or grounded wires, loose connections at terminal block or switch. See nameplate for electrical rating and range.
- **Incorrect Pressure:** Check pressure in system with suitable pressure gage. Pressure must be within range specified on nameplate.
- **Incorrect Adjustment:** Check adjustment nut for proper setting. Refer to adjustment instructions.
- **External Leakage:** Check to see that bolts (4) holding transducer to pressure switch are properly torqued to 80 ± 10 in–lbs [9,0 ± 1,1 Nm]. If bolts are tight and leakage is still evident, replace transducer. Refer to paragraph on *Assembly of Switch Unit and Transducer Unit.*
- **Excessive Vibration or Surges Causing Switch to Actuate and Reactuate:** Check for fluctuations in system and install pressure surge suppressor. Check switch mounting and be sure there is no excessive vibration.
- **Incorrect Temperature:** Check temperature in system with suitable thermometer. Temperature must be within range specified on nameplate. Check location of capillary and bulb for incorrect mounting. Refer to paragraphs on *Installation Of Temperature Transducers.*

If the operation of the switch cannot be corrected by the above means, the entire switch unit should be replaced or an authorized factory representative consulted.

Color Code Identification

When the switch cover is removed, the switch unit may be identified by the color of the sealant used on the locknuts of the snap switch. The color of the sealant will correspond directly to the third digit of the switch catalog number.

Third Digit In Catalog Number	Sealant Color Used On Snap Switch Locknuts
1	Yellow
2	Green
3	Red
4	Blue

Example: If the sealant color on the snap switch was red, this would mean that the third digit in the pressure switch catalog number would be 3, possibly SC[3]0D. It would not be, for example: SC[1]0D, SC[2]0D, or SC[4]0D.

FOR SERVICE REPLACEMENT, OR NEW TRANSDUCER
Consult Factory, or Authorized Factory Representative or Distributors

ORDERING INFORMATION

For Two–Stage Dual Adjustment Switch or New Transducer
When Ordering, Specify Catalog Numbers, Fluid, Pressure Range, Temperature Range, Serial Numbers, and Proof Pressure or Rated Overrange Temperature.

NAMEPLATES ARE LOCATED ON SWITCH COVER AND BOTTOM OF TRANSDUCER.

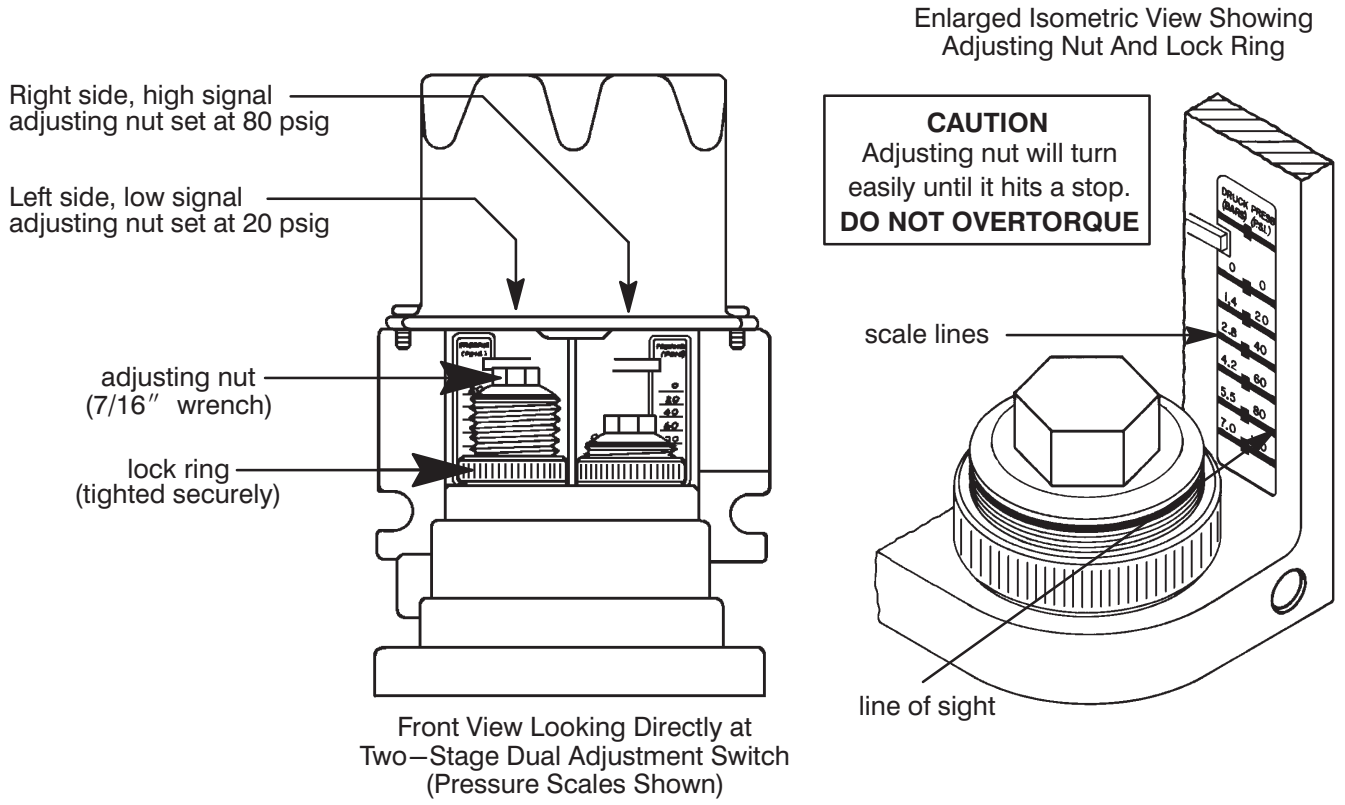

Figure 2. Adjustment (Signal Setting) of Two−Stage Dual Adjustment Switch.

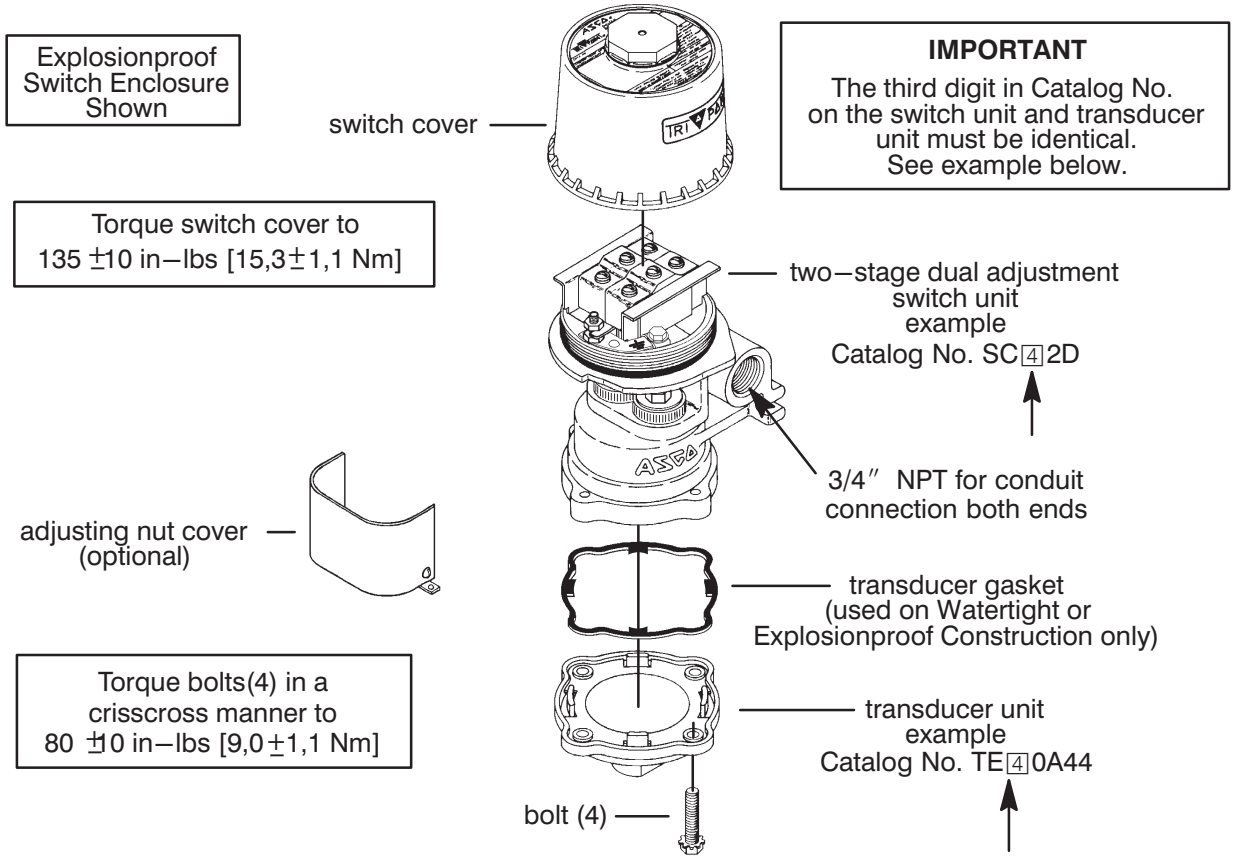

Figure 3. Switch Unit and Transducer Unit to be Assembled.

ASCO Valves Automatic Switch Co. 50−60 Hanover Road, Florham Park, New Jersey 07932

10

Mécanique Nordique
Plumbing
Heating
Ventillation
mecanique.nordique@hotmail.com
1255 Rue J.A.Bombardier Lévis QC G7A 2P4
Tél : (418) 496-1109 Fax : (418) 496-3803

REVIEWED BY CONTRACTOR
Kudlik Construction Ltd.
NAME: Sandra Rousseau P.Eng
DATE: Jun 04, 2018

IQUALUIT WWTP UPGRADES

DRAWING FOR APPROVAL

ENGINEER: **NUNAMI STANTEC LIMITED**

DRAWING #: AD-010

Section	: 22 30 05
Article	: 2.1 & 2.2
Plans	: M802 WATER HEATER SCHEDULE
Application	: OIL FIRED WATER HEATER
Brand	: A.O SMITH
Model	: COF-315
Revised #	:
Supplyer	: WOLSELEY
Date	: **01/06/2018**
By	: Martin Boucher

STANTEC PROJECT #: 110126045

This review by Stantec is for general conformance with the design concept of Stantec's design of the:

- ☐ Architectural
- ☐ Structural
- ☑ Mechanical
- ☐ Electrical
- ☐ Other

component(s) only and does not mean that Stantec has verified or approves the shop drawing(s). The Contractor remains solely responsible for the shop drawing(s) and this review by Stantec does not relieve the Contractor of the Contractor's responsibility for errors or omissions in the shop drawing(s) or for meeting all requirements of the contract documents. This review does not mean that Stantec approves the detailed design inherent in the shop drawing, responsibility for which shall remain with the Contractor submitting same, nor does this review mean that Stantec accepts any deviation of the shop drawing(s) from the contract documents. The Contractor is responsible for confirming all dimensions and correlating them at the job site, for all construction means, methods and techniques, and for coordination of construction work of all trades, including coordination of all shop drawings.

SUBMITTAL # AD-010

Stantec

- ☑ REVIEWED
- ☐ REVIEWED, AS NOTED
- ☐ REVISE AND RESUBMIT
- ☐ NOT REVIEWED

DATE 2018-06-04

BY Brendan Zrum, P.Eng

TAG: DHWT-1

Commercial Oil-Fired Water Heaters

SPEC 22 30 05 2.1 & 2.2

COMMERCIAL OIL-FIRED WATER HEATERS

FEATURES

MEETS THE THERMAL EFFICIENCY AND STANDBY LOSS REQUIREMENTS OF THE U.S. DEPARTMENT OF ENERGY AND CURRENT EDITION ASHRAE/IESNA 90.1

LIME TAMER™ MODELS INHIBIT LIME AND SEDIMENT BUILDUP—Lime Tamer™ models are warranted against tank failure due to sedimentbuildup for three years.

GLASSLINED TANK — Maximizes tank life. 160psi working pressure.

180° ADJUSTABLE THERMOSTAT— Has upper and lower sensingbulbs to average water temperatures at top and bottom of heater formaximum temperature control (120°-180°).

SAFETY SHUTOFF— Limits temperature buildup.

UL LISTED OIL BURNER— Precision engineered to match the units they are used with; designed to fire 1.75 to 5.0 gallons of oil per hour. All models equipped with single phase continuous duty motor 120 volt AC60 Hz, 3450 rpm with manual overload switch and interrupted ignition. Standard burners equipped with single stage pump with 1 or 2 line capability. Flame retention principle assures high rate of combustion efficiency, yet maintains low operating noise levels. Fuel unit includes pump, strainer, pressure regulating valve and ignition transformer. Transformer rated at 120 volt AC, 60 Hz with 10,000 volt secondary, UL listed for use with No. 1 and 2 commercial grade fuel oil. Burner mounted cadmium cell relay for flame detection - 15 second safety switch timing eliminates the need for RA890F Electronic Safeguard. Complies with UL A708.5-32/33.

EFFICIENT COMBUSTION CHAMBER— Precast, high temperature combustion chamber made of alumina silica ceramic fiber. Engineered for maximum insulation and heat reflection. Unique design assures more complete combustion by stabilizing flame pattern.

INTERRUPTED IGNITION— Reduces electrical consumption.

OIL SOLENOID SAFETY VALVE— Standard on COF-455 and 700.

3/4" DRAIN VALVE— Provided in lower tank for fast draining.

TWO HAND-HOLE CLEANOUTS—Allows easy cleaning on standard models COF-385 and larger and ASME models.

ANODIC PROTECTION—For longer tank life.

FLAME OBSERVATION PORT—Permits convenient flame check.

FOAM INSULATION—Saves fuel, helps maintain constant temperature.

JACKET—Heavy gauge steel with baked enamel finish over bonderized undercoat. Not approved for installation on combustible flooring.

EASY TO INSTALL BURNER—Three bolt mounting of burner assures easy installation.

BAROMETRIC DRAFT REGULATOR

CSA CERTIFIED AND ASME RATED T&P RELIEF VALVE

OTHER FEATURES

- Two Stage Pump - For use with underground oil storage tanks or JP-5 fuel
- ASME Construction Available - All models are rated 160 psi max working pressure
- CAUTION: Units must be installed on noncombustible surface.

THREE-YEAR LIMITED TANK WARRANTY

- Factory Start-Up included - Required for activating warranty and assuring maximum operating performance. Contact your local sales representative or Authorized Start-Up Agent to arrange a FREE Certified Start-Up.
- For complete warranty information, consult written warranty

COF-199 through COF-700



Lime Tamer™

ASME
(OPTIONAL)

Revised May 2012

AOSTO20000

TAG: DHWT-1

Commercial Oil-Fired Water Heaters

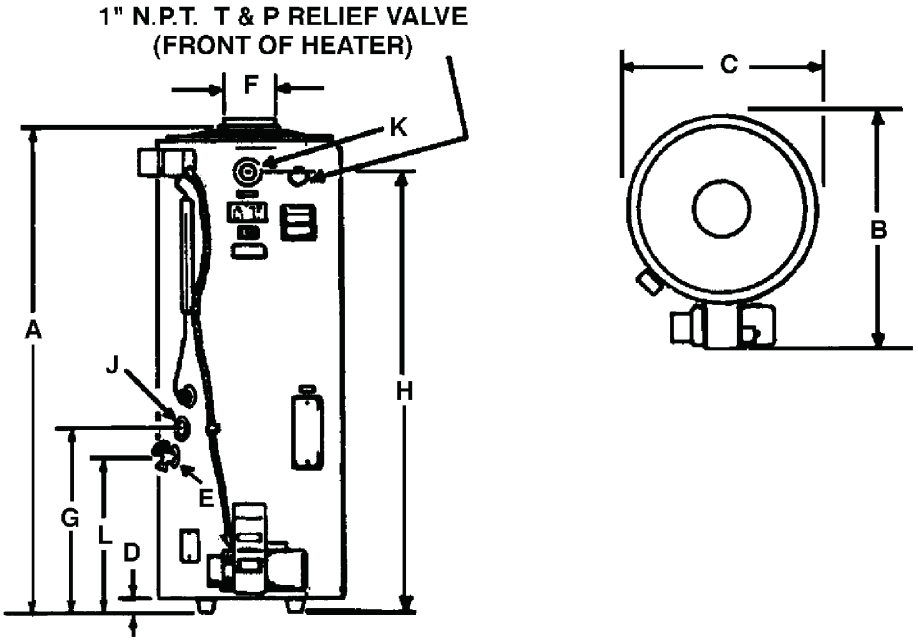

Dimensions in Inches

Models	A	B	C	D	E	F	G	H	J	K	L	Approx. Ship. Wt. (Lbs)	
												Standard	ASME
COF-199	74 1/2	36 3/4	27 3/4	2	3/4 NPT	8	26 5/8	74 1/2	1 1/2 NPT	1 1/2 NPT	22 3/4	553	-
COF-245	74 1/2	36 3/4	27 3/4	2	3/4 NPT	8	26 5/8	74 1/2	1 1/2 NPT	1 1/2 NPT	22 3/4	554	-
COF-315	74 1/2	36 3/4	27 3/4	2	3/4 NPT	8	26 5/8	74 1/2	1 1/2 NPT	1 1/2 NPT	22 3/4	554	657
COF-385	73 3/4	36 3/4	27 3/4	2	3/4 NPT	8	24 3/4	73 3/4	1 1/2 NPT	1 1/2 NPT	23 7/16	624	742
COF-455	73 3/4	36 3/4	27 3/4	2	3/4 NPT	8	24 3/4	73 3/4	1 1/2 NPT	1 1/2 NPT	23 7/16	700	747
COF-700	73 3/4	36 3/4	27 3/4	2	3/4 NPT	10	30 3/16	79 3/16	1 1/2 NPT	1 1/2 NPT	28 7/8	739	822

Specifications And Recovery Capacities

Models	Firing Rate GPH	Tank Storage (US Gal.)	Input* BTU/H	Recovery Rates at °F Rise											Motor HP
				40	50	60	70	80	90	100	110	120	130	140	
COF-199	1.42	86	199,000	477	381	318	272	238	212	191	173	159	147	136	1/8
COF-245	1.75	86	245,000	587	469	391	335	293	261	235	213	196	181	168	1/8
COF-315	2.25	84	315,000	754	604	503	431	377	335	302	274	251	232	216	1/8
COF-385	2.75	75	385,000	922	738	615	527	461	410	369	335	307	284	263	1/8
COF-455	3.25	75	455,000	1090	872	727	623	545	484	436	396	363	335	311	1/8
COF-700	5.00	69	700,000	1677	1341	1118	958	838	745	671	610	559	516	479	1/8

*Based on No. 2 fuel oil. Capacity rating are actual heater performance at 80% thermal efficiency.
NOTE: Above 2000' altitude, input ratings should be reduced 4% for each 1000' above sea level.

SUGGESTED SPECIFICATION

Water heater(s) shall be commercial oil model number _____ or equivalent. Heater(s) shall have a minimum oil firing rate of _____ gph at 100°F temperature rise and a storage capacity of _____ gallons. The 160 psi working pressure tank shall be glass-lined with the alkaline borosilicate composition being fused to the steel at 1600° and be equipped with 1 1/2" water inlet and outlet openings, and 2 3/4" x 3 3/4" boiler-type hand-hole cleanout (2) on COF-315 and larger or ASME models. The tank shall be insulated with 2" fiber glass insulation. The outer jacket shallhave baked enamel finish over a bonderized undercoating. The burner shall be Underwriters' Laboratories listed and have a _____ (one or two) stage oil pump. The burner shall have flame retention, interrupted ignition and be equipped with primary controls which will provide for 15 second safety shutdown in the event of flame failure. The heater(s) shall be factory equipped with primary controls which will provide for 15 second safety shutdown in the event of flame failure. The heater(s) shall be factory equipped with temperature limiting device, drain valve, flame observation port and 180° adjustable thermostat having upper and lower sensing bulbs which average the water temperatures at the top and bottom of the tank for maximum water temperature control. A CSA Certified and ASME Rated T&P Relief Valve shall be furnished and installed by the factory. Heater tank shall have a 3 year limited warranty against corrosion and tank failure due to sediment buildup as outlined in the warranty.

For Technical Information and Automated Fax Service, call 800-527-1953. A. O. Smith Corporation reserves the right to make product changes or improvements without prior notice.

MODELS COF-199 THRU 700A

COMMERCIAL OIL FIRED WATER HEATER FOR HOT WATER SUPPLY

• Installation • Service • Maintenance

Start-Up
Certified Factory Start-up Required
To activate your warranty, contact your local sales representative or Authorized Start-up agent to arrange for a FREE Certified Start-up.

Low Lead Content

c UL us LISTED

AHRI CERTIFIED®
www.ahridirectory.org

ASME HLW



⚠ CAUTION

TEXT PRINTED OR OUTLINED IN RED CONTAINS INFORMATION RELATIVE TO YOUR SAFETY. PLEASE READ THOROUGHLY BEFORE USING APPLIANCE.

DANGER: If the information in these instructions is not followed exactly, a fire or explosion may result causing property damage, personal injury or death.

— Do not store or use gasoline or other flammable vapors and liquids in the vicinity of this or any other appliance.

— WHAT TO DO IF YOU SMELL GAS

- Do not try to light any appliance.
- Do not touch any electrical switch; do not use any phone in your building.
- Immediately call your gas supplier from a neighbor's phone. Follow the gas supplier's instructions.
- If you cannot reach your gas supplier, call the fire department.

— Installation and service must be performed by a qualified installer, service agency or the gas supplier.

A.O. Smith®

500 Tennessee Waltz Parkway
Ashland City, TN 37015
www.hotwater.com

PLACE THESE INSTRUCTIONS ADJACENT TO HEATER AND NOTIFY OWNER TO KEEP FOR FUTURE REFERENCE.

PRINTED 0315

193472-006

FEATURES AND SPECIFICATIONS

TEXT PRINTED OR OUTLINED IN RED CONTAINS INFORMATION RELATIVE TO YOUR SAFETY. PLEASE READ THOROUGHLY BEFORE USING APPLIANCE.

This is a typical Duraclad oil-fired heater for commercial water heating applications. The principal components of the heater are shown and identified here. The identification plate illustrations on page 4 interpret certain markings into useful information. Use these references to identify the heater and its components

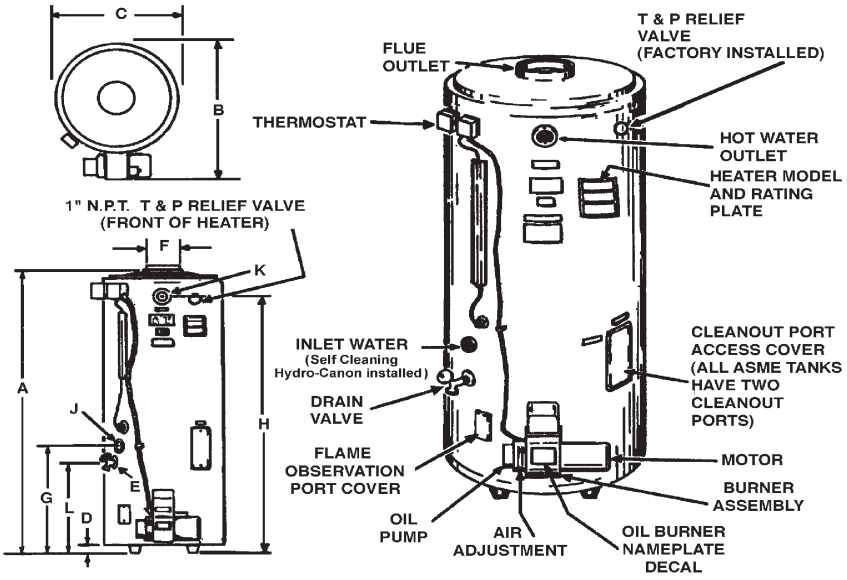

FIGURE 1

TABLE 1 NOMINAL MODEL DIMENSIONS

Model	COF - 199		COF - 245		COF - 315/315A		COF - 385/385A		COF - 455/455A		COF - 700/700A	
Dim.	Inches	mm	Inches	mm	Inches	mm	Inches	mm	Inches	mm	Inches	mm
A	74 1/2	1,892	74 1/2	1,892	74 1/2	1,892	73 3/4	1,873	73 3/4	1,873	73 3/4	1,873
B	36 3/4	933	36 3/4	933	36 3/4	933	36 3/4	933	36 3/4	933	36 3/4	933
C	27 3/4	705	27 3/4	705	27 3/4	705	27 3/4	705	27 3/4	705	27 3/4	705
D	2	51	2	51	2	51	2	51	2	51	2	51
E	3/4 NPT		3/4 NPT		3/4 NPT		3/4 NPT		3/4 NPT		3/4 NPT	
F	8	203	8	203	8	203	8	203	8	203	10	254
G	26 5/8	676	26 5/8	676	26 5/8	676	24 3/4	629	24 3/4	629	30 3/16	767
H	74 1/2	1,892	74 1/2	1,892	74 1/2	1,892	73 3/4	1,873	73 3/4	1,873	79 3/16	2,011
J	1 1/2 NPT		1 1/2 NPT		1 1/2 NPT		1 1/2 NPT		1 1/2 NPT		1 1/2 NPT	
K	1 1/2 NPT		1 1/2 NPT		1 1/2 NPT		1 1/2 NPT		1 1/2 NPT		1 1/2 NPT	
L	22 3/4	578	22 3/4	578	22 3/4	578	23 7/16	595	23 7/16	595	28 7/8	733
Approx. Shipping Weight STD.	553 Lbs	251 Kg.	554 Lbs.	252 Kg.	554 Lbs.	252 Kg.	624 Lbs.	283 Kg.	700 Lbs.	318 Kg.	739 Lbs.	335 Kg.
Approx. Shipping Weight ASME	---	---	---	---	657 Lbs.	298 Kg.	742 Lbs.	337 Kg.	747 Lbs.	339 Kg.	822 Lbs.	373 Kg.

ALL DIMENSIONS IN INCHES/mm

*Model numbers followed by the suffix "A" indicates the optional A.S.M.E. tank construction.

TABLE 2 RECOVERY CAPACITIES, based on 80% thermal efficiency

			TANK CAPACITY		APPROX EFF.		U.S Gallons/Hr. and Litres/Hr at TEMPERATURE RISE INDICATED										
						F°	40F°	50F°	60F°	70F°	80F°	90F°	100F°	110F°	120F°	130F°	140F°
Model	Btuh	KW	U.S.Gal.	Litres	%	C°	22.2C°	27.7C°	33.3C°	38.8C°	44.4C°	50C°	55.5C°	61.1C°	66.6C°	72.2C°	77.7C°
COF	199,000		86		80	GPH	477	381	318	272	238	212	191	173	159	147	136
199		58		326		LPH	1804	1443	1203	1031	902	802	722	656	601	555	516
COF	245,000		86		80	GPH	587	469	391	335	293	261	235	213	196	181	168
245		72		326		LPH	2221	1777	1481	1269	1111	987	889	808	740	683	635
COF	315,000		84		80	GPH	754	604	503	431	377	335	302	274	251	232	216
315/315A		92		318		LPH	2856	2285	1904	1632	1428	1269	1142	1039	952	879	816
COF	385,000		75		80	GPH	922	738	615	527	461	410	369	335	307	284	263
385/385A		113		284		LPH	3491	2793	2327	1995	1745	1551	1396	1269	1164	1074	997
COF	455,000		75		80	GPH	1090	872	727	623	545	484	436	396	363	335	311
455/455A		133		284		LPH	4125	3300	2750	2357	2063	1833	1650	1500	1375	1269	1179
COF	700,000		69		80	GPH	1677	1341	1118	958	838	745	671	610	559	516	479
700/700A		205		261		LPH	6347	5077	4231	3627	3173	2821	2539	2308	2116	1953	1813

* All tanks are tested at 320 psig working pressure.

** Based on No. 2 fuel oil with a heat content of 140,000 Btu's per gallon at 80% thermal efficiency. Above 2,000 altitude, input ratings should be reduced 4% for each 1000' above sea level.

TABLE OF CONTENTS

FEATURES AND SPECIFICATIONS 2
APPROVALS 3
IDENTIFICATION
- Oil and Burner Nameplate Decal 3
- Oil Burner Specifications 4

SAFETY 4
INSTALLATION
- Required Ability 4
- General 4
- Uncrating 4
- Leveling 4
- Location 4-5
- Clearances 5
- Combustion and Ventilation Air 5
- Chemical Vapor Corrosion 5-6
- Flue Gas Venting 6
- Vent Connector and Draft Regulator 6
- Water Piping 7
- Closed Water System 7
- Drain Valve and Access Panels 7
- Fuel Systems 7-8
- Burner Installation 8-9
- Fuel Pump 9
- Wiring Diagrams 10

OPERATION
- General 11
- Filling 11
- Start Up 11
- Water Temperature Control 11
- High Limit Switch E.C.O. 11-12
- Burner Certificate (Combustion Test) 12
- Self-Cleaning Eliminator 12
- Draining 12

MAINTENANCE
- General 12
- Relief Valves 12
- Flushing 13
- Sediment Removal 13
- Lime Scale Removal 13-14
- Circulating Pump 14
- Soot Removal 14
- Vent System 14

INSTALLATION DIAGRAMS 15-19
CHECKLIST AND SERVICE INFORMATION
- Electrical Wiring Replacement 20
- Not Enough or No Hot Water 20-21
- Burner Starts - Won't Operate 21
- Water Too Hot 21
- Water Heater Makes Sounds 21
- Water Leakage is Suspected 21
- Burner Won't Start 21
- Burner Starts But Fails To Run 21
- Normal Start, But Locks Out On Safety 22
- Safety Primary Control 22

COMBUSTION TEST SPECIFICATIONS 22
TROUBLESHOOTING 23
WARRANTY 24

APPROVALS

The burner and controls are listed by Underwriters' Laboratories Inc. Accordingly, the burner bears one of the UL labels indicating periodic inspection of the production of this equipment.

All ASME tanks are built to the standards of Section IV of the American Society of Mechanical Engineers code and are stamped with their symbol. The National Board of Boiler and Pressure Vessel Inspectors papers are furnished upon request. The NB number and HLW symbol (to the right) are on the plate located just below cleanout on tank. (May be viewed by removing cleanout cover on jacket).

ASME
HLW

Model "A", AFG Series Oil Burner
Made in U.S.A.
Mfg. by R.W. BECKETT CORP. Elyria, Ohio
0.50 - 3.00 GPH 120V, 66Hz, 5.8 AMPS
SERIAL NUMBER
000000 - 00000
COF -199/245/315(A)
Underwriter's Labortories Inc.
LISTED
OIL BURNER
NO. PI - 100001
For use with Group 1 or 2 primary safety controls & #1 or #2 fuel oil
MP 1192 AOS201 RO4

Model "S", "SF" Series Oil Burner
Made in U.S.A.
Mfg. by R.W. BECKETT CORP. Elyria, Ohio
2.50 - 5.00 GPH 12V, 66Hz, 7.1 AMPS
SERIAL NUMBER
000000 - 00000
COF -385(A), 455(A), 700(A)
Underwriter's Labortories Inc.
LISTED
OIL BURNER
NO. PI - 100001
For use with Group 1 or 2 primary safety controls & #1 or #2 fuel oil
MP 1192 AOS201 RO4

IDENTIFICATION

The heater and burner rating plates or labels provide valuable information. When ordering parts or inquiring about a unit, be sure to include all information from the plates. See Figure 1 on page 2 for approximate location of the heater rating plate.

The heater rating plate model number, see fig. 2, includes a series number which identifies the construction of the heater.

OIL FIRED WATER HEATER

MODEL NUMBER	SERIAL NUMBER	ITEM ID
COF 455 940	CO5MOO6721	XXXXXXXXX

INPUT BTUH	FIRING RATE US GAL/HR	RECOVERY US GAL/HR	CAPACITY US GAL.	MAX WORKING PRESSURE PSI
455,000	3.25	XXX.X	XX	XXX

ELECTRICAL RATINGS VOLTS AC	AMPS	HZ	CITY of NEW YORK DEPARTMENT OF BUILDINGS MEA
120	10	60	

A TYPICAL HEATER RATING PLATE
FIGURE 2

OIL BURNER NAMEPLATE DECAL

The oil burner's nameplate decal (see page 2 for the approximate location on the burner) contains a burner code 940 or 941 which should exactly match the model input appearing under the model number of the heater's rating plate.

If these codes do not match, the oil burner may not be the correct model for the heater model purchased, Contact your A.O. Smith dealer for further information and replacement, if required.

MFR'S SETTING

ATC:	AF65XS
FIRE RNG:	2.5 - 3.00 GPH
HEAD:	F31
NOZZLE:	2.75 X 80B DLVN SLD
PUMP PRS:	100 PSI

BURNER INPUT IN KBTU/H
XXX-199-940 SERIES
OIL PUMP
940 = SINGLE STAGE
941 = TWO STAGE

Comm. of Mass.
State Fire Marshal
Approval #BEC - 88 - 05
Approved July 1, 1988
Accepted N.Y.C. MEA. 156 -77 -E
980113-98606 A08201 R04

A TYPICAL OIL BURNER NAMEPLATE DECAL
FIGURE 3

OIL BURNER SPECIFICATIONS

The oil burner nameplate decal includes a series code which identifies the major features of the oil burner. The series number is the last three digits of the burner code number.

Table 3 below describes the oil burner characteristics for each series number. The burners are to be used with fuel oil not heavier than No. 2.

TABLE 3 SOME NOTABLE OIL BURNER FEATURES

A.O. Smith Burner or Heater Series Number*	R.W. Becket Burner Model Number	Safety Timing+	Oil Pump Type Mode	Suntec Oil Pump	Nozzle Type	
					Spray Pattern	Spray Angle
940	AFG SF	15 Sec.	Single Stage	A2VA 7118 A2YA-7916	Type B Solid Cone	80°
941	AFG SF	15 Sec. 15 Sec.	Two-Stage	B2VA 8216 BY2A 8916	Type B Solid Cone	80°

* To provide the proper firing rate for each model heater, see SPECIFICATIONS: there are burner models for each heater model in table 2. The Burner and heater model numbers must match and the heater (or the burner) series number should indicate the features specified for the installation.

\+ All oil burners have "interrupted ignition" . . . meaning the ignition is on during the flame establishing period only. Ignition is off when the burner is off. Standard safety timing is 15 seconds.

The heater series number determines the type of oil pump supplied with the oil burner. For installations where gravity feed of fuel oil from the storage tank to the heater is practical, an oil burner with a single-stage oil pump can be used. The 940 series of burners have single-stage pumps which are shipped for installation of a supply line to the tank only. A return line back to the storage tank can be installed, if required, by making a small modification to the pump, see the oil burner installation manual.

For installations where gravity feed cannot be employed, (the storage tank is located significantly below, or remote from, the heater) an oil burner with a two-stage oil pump should be used. The 941 series of burners have two-stage pumps which are shipped for installation of a supply and return line to the tank. However, in situations where the return line is not required (low lift installations), the pump may be modified to operate without the line, see the oil burner installation manual.

IMPORTANT

The oil-fired water heater shipment consists of two packages, heater and oil burner. Check to be certain the model number on the heater and oil burner packages match. To assure matching equipment, see preceding information.

TABLE 3A

Model Heater		COF 199	COF 245	COF 315/315A	COF 385/385A	COF 455/455A	COF 700/700/A
Min. Firing Rate In GPH	A.O. Smith Burner	1.42	1.75	2.25	2.75	3.25	5.0
	Non A.O. Smith Burner	1.1	1.5	2.0	2.5	3.0	4.5

SAFETY

DANGER

BE SURE TO TURN OFF POWER WHEN WORKING ON OR NEAR THE ELECTRICAL SYSTEM OF THE HEATER. NEVER TOUCH ELECTRICAL COMPONENTS WITH WET HANDS OR WHEN STANDING IN WATER. WHEN REPLACING FUSES ALWAYS USE THE CORRECT SIZE FOR CIRCUIT.

If it is necessary to reset the safety control, depress red button one time only. If burner does not operate after depressing red button one time, call serviceman.

INSTALLATION

REQUIRED ABILITY

INSTALLATION OF SERVICE OF THIS WATER HEATER REQUIRES ABILITY EQUIVALENT TO THAT OF A LICENSED TRADESMAN IN THE FIELD INVOLVED. PLUMBING, AIR SUPPLY, VENTING , OIL BURNER AND ELECTRICAL WORK REQUIRED.

GENERAL

The installer should be guided by these instructions, local codes and the following publications.

- Standard for the Installation of Oil Burning Equipment, NFPA Standard No. 31, Available from National Fire Protection Association, Batterymarch Park, MA 02269.
- Code for the Installation of Heat Producing Appliances, Available from American Insurance Association, 85 John Street, New York, NY 10038.
- The National Electrical Code, NFPA No. 70. Availability same as NFPA Standard No. 31.
- In Canada - CAN/CSA-B139 Installation Code for Oil Burning Equipment.

When other than an A.O. Smith burner is used, this instruction manual can be used as a general guide. The burner manufacturer's instructions will have to be consulted on specific questions of wiring, air adjustment, etc.

Do not test the burner or control system before the heater is filled with water. Follow the START-UP procedure in this manual.

UNCRATING

Uncrate the heater by removing the outside mat and top locator. The shipping pallet must be removed from the unit. It may be possible to simply unbolt the base from the pallet and, with the help of two or more persons, work the unit off the pallet. Some units will be too heavy and will require the use of jacks or lifting equipment. Safely remove the pallet and move the unit into position. Be Careful When Moving This Heater. It will tip over easily.

LEVELLING

Install the heater plumb to the ground. If it is necessary to adjust the heater, use metal shims under the channel type skid base.

LOCATION

The water heater should not be installed where the combustion air is contaminated, see COMBUSTION AND VENTILATING AIR. Temperature in the location must be above 32°F (0°C) and free of combustible dusts and flammable gases or vapors.

For the best installations, the water heater should be located:

1. On a level surface.
   - Shim the channel type skid base as necessary If leveling is required.
2. Near a floor drain.
   - The heater should be located in an area where leakage of the tank or connections will not result in damage to the area adjacent to the heater or to lower floors of the structure.
   - When such locations cannot be avoided, a suitable drain pan should be installed under the heater.
   - The pan should be at least two inches deep, have a minimum length and width of at least two inches greater than the diameter of the heater and should be piped to an adequate drain. The pan must not restrict combustion air flow.

- The discharge opening of the relief valve should always be piped to an open drain.
- Choose the point of major hot water usage, fuel supply and chimney.
- Try to make hot water and oil piping as short as possible.
- Insulate hot and cold water piping where heat loss and condensation may be a problem.

CLEARANCES

The heater has minimum clearances to combustible material, on a non-combustible floor of: 6 inches (152 mm) from the sides and rear, 24 inches (610 mm) from the front, and 18 inches (457 mm) from the vent connector. These clearances are, as shown in fig. 4A to prevent possible fire hazard conditions.

At least 24" (610 mm) of top clearances are recommended for vertical vent installation.

Allow sufficient room at rear of heater for servicing of T&P relief valve.

At least 24" (610 mm) should be provided at front of the unit for proper servicing.

Units which are to be installed on combustible flooring must be supported by a full layer of hollow concrete blocks, fig. 4, from 8" (203 mm) to 12" (305 mm) thick and extending 12" (305 mm) minimum beyond the heater in all directions. The concrete blocks must provide an unbroken concrete surface under the heater, with the hollows running continuous and horizontally. A 3/16" (4.8 mm) steel plate must cover the concrete blocks. See Figure 4.

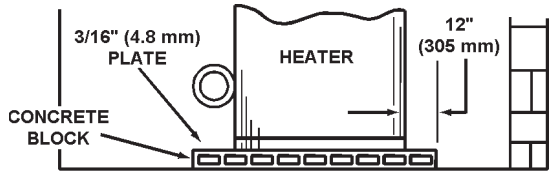

PROPER INSTALLATION ON COMBUSTIBLE FLOORING
FIGURE 4

NOTE: If electrical conduits run under the floor of the proposed heater location, insulate the floor as recommended above.

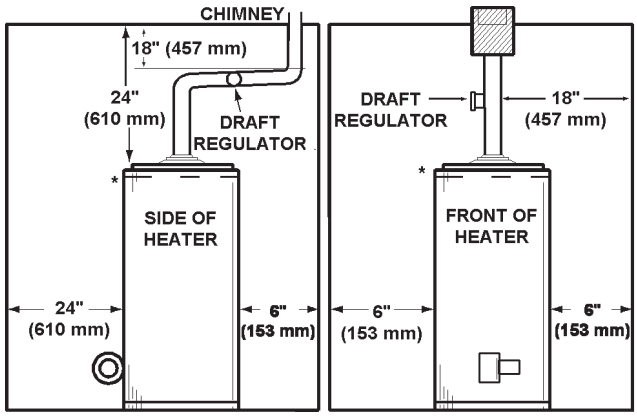

PROPER INSTALLATION CLEARANCES FOR TWO DIFFERENT VENTING SYSTEMS
FIGURE 4A

*** HOT WATER OUTLET LOCATION AT FRONT OF HEATER**
- **FACTORY FURNISHED HEATER MANIFOLD KITS (OPTIONAL) ARE DESIGNED FOR 10" (254 mm) SPACING BETWEEN SIDES OF ADJACENT UNITS.**

COMBUSTION AND VENTILATION AIR

GENERAL

The water heater area should have sufficient air for satisfactory combustion of oil, and proper venting and of safe ambient temperature.

When a heater is installed in an area where exhaust or ventilating fans may create unsatisfactory combustion or venting, approved provisions must be made to overcome the problem, see NFPA Standard No. 31, Chapter 1.

CHEMICAL VAPOR CORROSION

Water heater corrosion and component failure can be caused by the heating and breakdown of air borne chemical vapors. Spray can propellants, cleaning solvents, refrigerator and air conditioning refrigerants, swimming pool chemicals, calcium and sodium chlorides, waxes, and process chemicals are typical compounds which are potentially corrosive. These materials are corrosive at very low concentration levels with little or no odor to reveal their presence.

Products of this sort should not be stored near the heater. Also, air which is brought in contact with the water heater should not contain any of these chemicals. If necessary, uncontaminated air should be obtained from remote or outside sources.

UNCONFINED SPACES (Building Construction)

NOTE: An uncontaminated space is defined as a space whose volume is not less than 50 ft^3 per 1000 BTUH (4.83m^3 per kW)of total input of all fuel burning appliances installed in that space. The unconfined space may be thought of as extending to all areas which cannot be separated by a door or door(s). All other spaces not fitting this description, should be thought of as confined space.

1. In unconfined spaces in buildings of conventional frame, brick or stone construction, infiltration will normally supply an adequate amount of air for combustion and ventilation.
2. If the unconfined space is within a building of tight construction, eg. weather stripping, heavy insulation, caulking, vapor barrier, ect., air infiltration may be insufficient to support proper combustion and ventilation, air shall be obtained from outdoors or from spaces freely communicating with the outdoors.

   - Follow the instructions under Part 2 of Confined Spaces (Room Construction)

CONFINED SPACES (Room Construction)

1. All air from inside building (conventionally constructed buildings only): The confined space shall be provided with two permanent openings, one within 12" (305 mm) of the ceiling and one within 12" (305 mm) of the floor, fig. 5.

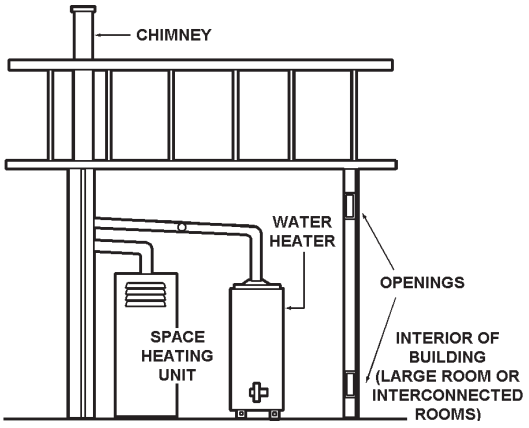

FIGURE 5

   - Each opening shall have a free area of not less than one square inch per 1,000 Btu per hour (140 square inches per gallon of oil consumed per hour) of the total input rating of all appliances in the enclosure, freely communicating with the interior areas having in turn adequate infiltration from the outside. In all cases, each opening shall not have a free area of less than 100 square inches.

2. All Air From Outdoors: The confined space shall be provided with two permanent openings, one in or within 12" of the top of the enclosure and one in or within 12" of the bottom. The openings shall communicate directly, or by means of ducts, with outdoors or such spaces that freely communicate with outdoors.

   - If the appliance room is located against an outside wall and the air openings communicate directly with the outdoors, each opening shall have a free area of not less than one square inch per 4,000 Btu per hour (35 square inches per gallon of oil consumed per hour) of the total input rating of all appliances in the enclosure.

- When communicating with outdoors by means of vertical ducts, each opening shall have a free area of not less than one square inch per 4,000 Btu per hour (551 mm²/kW) (35 square inches per gallon of oil consumed per hour) of total input rating of all appliances in the enclosure.

- If horizontal ducts are used, each opening shall have a free area of not less than one square inch per 2,000 Btu per hour (1,101 mm²/kW) (70 square inches per gallon of oil consumed per hour) of total input of all appliances in the enclosure, fig. 6.

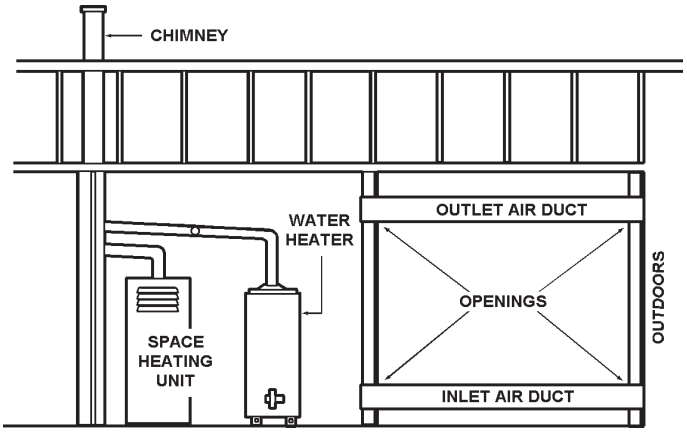

FIGURE 6

FLUE GAS VENTING

In the absence of any local codes, regulations, or vent pipe or chimney manufacturer's recommendations, for oil fired equipment, follow the suggestions below for designing and installing a venting system.

For these water heaters, it is recommended that an adequate chimney be used for venting the flue gases. Type B, double wall, vent pipe should be used as the vent connector pipe. However, where no chimney is available, vent pipe may be used to construct a vent.

Where an existing chimney or vent is to be used, be sure that the chimney or vent has adequate capacity for the number and sizes of appliances being vented through it. Inspect the chimney or vent and remove all soot or other obstructions which will retard free draft.

VENT CONNECTOR AND DRAFT REGULATOR

The chimney or vent connector diameter should be the same size as the heater flue outlet, see Table 4. A minimum rise of 1/4" per foot (21 mm/M) of horizontal connector length must be maintained between the heater and chimney opening, fig. 7. The connector length should be kept as short as possible.

TABLE 4 SUGGESTED VENT CONNECTOR SIZES

Model Number	Outlet Diameter	
	Inches	(mm)
COF-199*	6	152.4
COF-245	8	203.2
COF-315/315A	8	203.2
COF-385/385A	8	203.2
COF-455/455A	8	203.2
COF-700/700A	10	254

* These models are factory supplied with a flue reducer which should be installed on the top cover.

In venting systems where a continuous or intermittent back (positive) draft is found to exist, the cause must be determined and corrected. In some cases, a special vent cap may be required.

If the back draft cannot be corrected by normal methods or if a suitable draft cannot be obtained, additional make up air must be provided to the room to assure proper venting and combustion.

Note: A negative draft must be maintained in the vent piping.

The barometric draft regulator must be installed in the same room as the heater, fig. 6. Locate the regulator as close as possible to the heater and at least 18" (452 mm) from a combustible ceiling or wall. A manually operated damper should not be placed in the chimney connector.

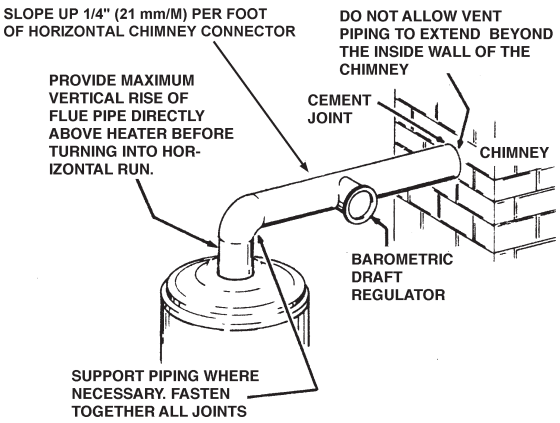

PROPER VENT CONNECTOR INSTALLATION

FIGURE 7

CHIMNEY

The oil-fired water heater must be connected to a chimney built in accordance with accepted building code practice or listed factory built type, Table 5. The exit point of the chimney flue gas must be at least 3' (0.91M) above the highest point where it passes through the roof of a building. Also, it must be at least 2' (0.61M) higher than any portion of a building within 10' (3.05 M) of the chimney.

TABLE 5 - USUAL CHIMNEY SIZES FOR UNITS

Model Number	Oil Firing Rate		Equivalent Heat Input Rate		Output Heat Rate		Square & Rectangle Stack Dimension		Round Stack Diameter		Minimum Height	
	(GPH)	(LPH)	Btuh	kW	Btuh	kW	Inches	mm	Inches	mm	Feet	Metres
COF-199	1.42	5.38	199,000	58	159,200	47	8 1/2 X 8 1/2	216 x 216	9	228.6	20	6.1
COF-245	1.75	6.62	245,000	72	196,000	57	8 1/2 X 8 1/2	216 x 216	9	228.6	20	6.1
COF-315/315A	2.25	8.52	315,000	92	252,000	74	8 1/2 X 13	216 x 330	10	254	30	9.1
COF-385/385A	2.75	10.41	385,000	113	308,000	90	8 1/2 X 13	216 x 330	10	254	30	9.1
COF-455/455A	3.25	12.30	455,000	133	364,000	107	13 X 13	330 x 330	12	304.8	35	10.7
COF-700/700A	5.0	18.93	700,000	205	560,000	164	13 X 18	330 x 457	14	355.6	40	12.2

MULTIPLE HEATER FLUES

When two or more oil-fired water heaters are connected to a single chimney or vent there shall be sufficient draft available for safe combustion and removal of combustion products to the outdoors from each heater. Refer to local codes for connection details.

Only one oil-fired water heater should be connected to any one type L venting system.

A draft regulator shall be provided for each oil-fired water heater in a multiple heater system.

DANGER

INCORRECT INSTALLATION CAN CAUSE IMPROPER OPERATION, FIRE, ASPHYXIATION, SERIOUS PERSONAL INJURY OR DEATH. NEVER OPERATE THIS WATER HEATER UNLESS IT IS PROPERLY VENTED TO THE OUTDOORS AND HAS ADEQUATE COMBUSTION AIR SUPPLY.

WATER PIPING

GENERAL

Select the piping diagram for the type of system to be installed from pages 15 through 19. When a circulation pump is used in the system a plug cock should be installed where indicated to regulate water flow through the heater.

RELIEF VALVE

An CSA design-certified and A.S.M.E.-rated temperature and pressure relief valve is installed in the water heater . The relief valve has a discharge capacity exceeding the maximum heater input rating and a pressure rating not exceeding the working pressure shown on the rating plate of the heater.

A temperature and pressure relief valve must also be installed on any potable water storage tank. This relief valve should have a temperature rating of 210° F (98.8°C), a pressure rating not exceeding the lowest rated working pressure of any system component, and a discharge capacity exceeding the total input of the water heaters supplying water to the storage tank.

THE PURPOSE OF A RELIEF VALVE IS TO AVOID EXCESSIVE PRESSURE OR TEMPERATURE INTO THE STEAM RANGE, WHICH MAY CAUSE SCALDING AT FIXTURES, TANK EXPLOSION, SYSTEM OR HEATER DAMAGE.

To avoid scalding or water damage, a drain line must be connected to a relief valve to direct discharge to a safe location, A DRAIN LINE MUST NOT BE REDUCED FROM THE SIZE OF THE VALVE OUTLET AND IT MUST NOT CONTAIN ANY VALVES BETWEEN THE HEATER AND THE RELIEF VALVE OR THE RELIEF VALVE AND THE DRAIN LINE EXIT. IN ADDITION, THERE SHOULD NOT BE ANY RESTRICTIONS IN A DRAIN LINE NOR SHOULD IT BE ROUTED THROUGH AREAS WHERE FREEZING CONDITIONS MIGHT OCCUR. DO NOT THREAD OR CAP THE DRAIN LINE EXIT. RESTRICTING OR BLOCKING A DRAIN LINE WILL DEFEAT THE PURPOSE OF THE RELIEF VALVE AND MAY CREATE AN UNSAFE CONDITION. Install a drain line with a downward slope such that it naturally drains itself.

Your local code authority may have other specific relief valve requirements.

NOTE: These heaters are equipped with an automatic burner shutoff system actuated by high water temperature.

CLOSED WATER SYSTEM

A closed system will exist if a back-flow preventer (check valve), pressure reducing valve, or other similar device is installed in the cold water line between the water heater and the street main (or well). Excessive pressure may develop due to the thermal expansion of heated water causing premature tank failure or intermittent relief valve operation. This type of failure is not covered by the limited warranty. An expansion tank may be necessary in the cold water supply to alleviate this situation, see installation diagrams on pages 15-19. Contact the local plumbing authority.

DRAIN VALVE AND ACCESS PANELS

The heaters are equipped with a 3/4" NPT drain valve mounted above and to the left of the oil burner, see FEATURES, page 2.

An access panel is located above and to the left of the oil burner and covers the flame observation port, fig. 8. A plug is inserted into the flame observation port and must be removed in order to look into the combustion chamber. Always reinstall plug before replacing access panel.

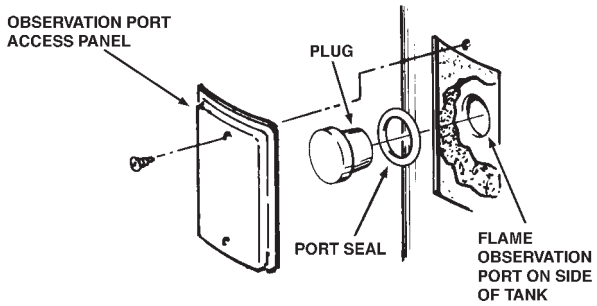

COMBUSTION CHAMBER ACCESS PORT - FIGURE 8

Another access panel is located above and to the right of the oil burner, fig. 9. This panel covers the cleanout opening in the tank which is sealed by a gasket and cover.

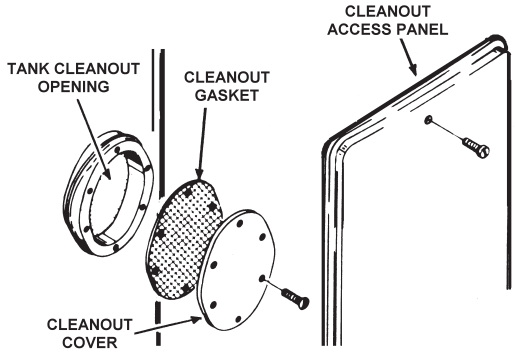

TANK CLEANOUT PORT - FIGURE 9

Models having ASME tank construction will have two cleanout ports. One port will be located as indicated above and the other will be located directly opposite.

Occasionally, some water seepage will occur at a cleanout port. To correct this situation, slightly tighten the cleanout cover bolts until the seepage is eliminated. Do not over tighten the bolts or the cleanout gasket will be damaged. Tighten each bolt gradually and alternate between opposed bolts on the cleanout cover.

FUEL SYSTEMS

GENERAL

The Standard for the Installation of Oil Burning Equipment-NFPA No. 31, local codes, and these instructions must be followed when installing the tank, piping and burner. In addition, an oil pump installation sheet and oil burner certificate are packed with the burner for use and completion by the installer.

On fuel systems with high pressures, a Webster "OSV" oil safety valve (Webster Electric CO., Racine, Wisc.) will be required to reduce the oil pressure at the burner pump. See FUEL PUMP, page 9, for pressure ratings of the burner's pump.

This manual and the completed oil burner certificate (CS75) are to be left with the user for future reference.

Figure 10 shows a typical single stage one or two line fuel system. When two or more tanks are connected to one burner, the supply line from each tank should run to a header fitted with an approved three-way valve. Normally only one tank may be drawn at a time unless local codes permit simultaneous feeding of two tanks on gravity type installations.

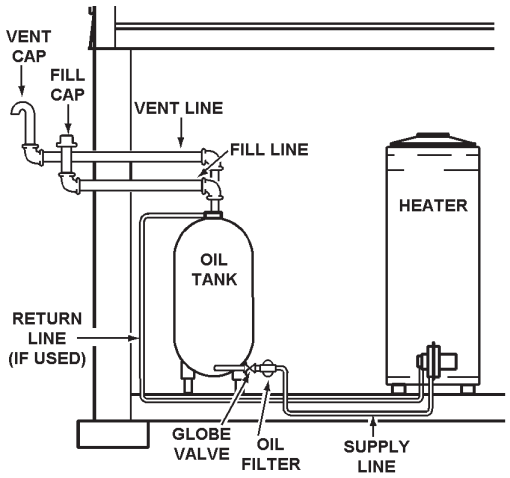

A TYPICAL HEATER INSTALLATION - FIGURE 10

Refer to pages 2, 3, and 4 in this manual for more information about burner series numbers and characteristics for adaptability to the following systems.

SYSTEM TYPES

Single Stage, Supply Line Only: The bottom of the oil storage tank must be above the level of the fuel unit, fig. 11. The fuel oil will flow by gravity to the burner. A single pipe is run between the tank and fuel unit. Burner Series No. 940 is from this type of service as shipped (the bypass plug is not installed).

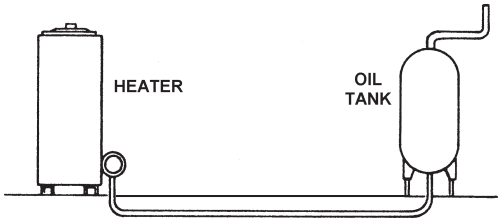

A GRAVITY FEED, SUPPLY LINE ONLY, INSTALLATION FIGURE 11

If the bottom of the oil tank is at least 2 inches (50.8 mm) higher than the plug opening at which the supply line connects to the fuel pump, a single-line gravity-feed system with 3/8" O.D. tubing may be used with a maximum run length of 100 feet.

- A two stage pump may be used on one line, gravity feed installations. The pump will function as a single stage unit when the by-pass plug is not installed.
- Single Stage, Supply and Return Lines. This type of system, fig. 12, is self-priming. Burner Series No. 940 with by-pass plug field installed, is for this type of service.

If the tank bottom is no lower than 10 feet below the plug, a single stage pump may be used but, it must be a two line system with maximum tubing runs (which includes lift) as shown in Table 6.

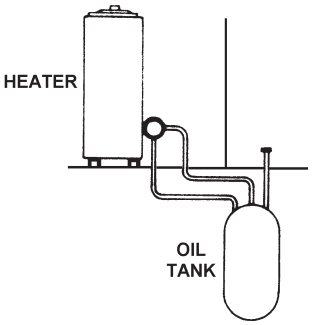

A SINGLE STAGE (LOW LIFT), SUPPLY AND RETURN LINE INSTALLATION - FIGURE 12

TABLE 6

Distance Tank Bottom Below Pump Plug Ft. (M)	Max. Run length Ft. (M) 3/8" O.D. Tubing	Max. Run length Ft. (M) 1/2" O.D. Tubing	Distance Tank Bottom Below Pump Plug Ft. (M)	Max. Run Length Ft. (M) 3/8" O.D. Tubing	Max. Run Length Ft. (M) 1/2" O.D. Tubing
1 (0.3)	66 (20.1)	100 (30.4)	6 (1.8)	36 (10.9)	100 (30.4)
2 (0.6)	55 (16.7)	100 (30.4)	7 (2.1)	31 (9.4)	100 (30.4)
3 (0.9)	50 (15.2)	100 (30.4)	8 (2.4)	26 (7.9)	100 (30.4)
4 (1.2)	45 (13.7)	100 (30.4)	9 (2.7)	21 (6.4)	83 (25.2)
5 (1.5)	40 (12.1)	100 (30.4)	10 (3.0)	16 (4.8)	64 (19.5)

Two Stage, Supply and Return Lines: This system, fig. 13, is required when long lines and high lifts (requiring up to 20" of vacuum and 10' vertical lift) are encountered. Burner Series No. 941 is used in this service. Bypass plug must be installed.

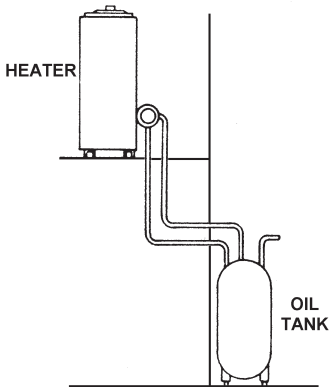

A TWO STAGE (HIGH LIFT), SUPPLY AND RETURN LINE INSTALLATION - FIGURE 13

If the tank(s) bottom is lower than the plug by more than 10 feet, a two stage pump with a two line system must be used with maximum tubing runs (which includes lift) as shown in Table 7.

TABLE 7

Distance Tank Bottom Below Pump Plug Ft. (M)	Max. Run length Ft. (M) 3/8" O.D. Tubing	Max. Run length Ft. (M) 1/2" O.D. Tubing	Distance Tank Bottom Below Pump Plug Ft. (M)	Max. Run Length Ft. (M) 3/8" O.D. Tubing	Max. Run Length Ft. (M) 1/2" O.D. Tubing
1 (0.3)	74 (22.5)	100 (30.4)	9 (2.7)	51 (15.5)	100 (30.4)
2 (0.6)	71 (21.6)	100 (30.4)	10 (3.0)	48 (14.6)	100 (30.4)
3 (0.9)	69 (21.0)	100 (30.4)	11 (3.3)	45 (13.7)	100 (30.4)
4 (1.2)	66 (20.1)	100 (30.4)	12 (3.6)	42 (12.8)	100 (30.4)
5 (1.5)	63 (19.2)	100 (30.4)	13 (3.9)	39 (11.8)	100 (30.4)
6 (1.8)	60 (18.2)	100 (30.4)	14 (4.2)	37 (11.2)	100 (30.4)
7 (2.1)	57 (17.3)	100 (30.4)	15 (4.5)	34 (10.3)	100 (30.4)
8 (2.4)	54 (16.4)	100 (30.4)			

MULTIPLE HEATER FUEL LINES

Where two or more heaters form a water heating system, each burner shall have an entirely separate oil supply line from the tank to the burner.

BURNER INSTALLATION

GENERAL

An oil Burner Certificate is packed with the oil burner. Following the burner manual installation the necessary tests shall be performed and results recorded on the certificate, see BURNER CERTIFICATE. The certificate and this instruction manual must be left with user for future reference.

Check to be certain the heater and burner model numbers are alike and the oil pump characteristics are proper for the job. See IDENTIFICATION, page 3.

BURNER

The burner assembly is mounted on the flange of the combustion chamber, fig. 14.

NOTE: Be certain combustion chamber opening is aligned with opening in heater flange, fig. 14, before placing burner into heater .

1. Place the flange gasket over the 3/8" x 1/4" long studs on the flange.

2. Place the burner flange on the studs and into the heater flange opening.

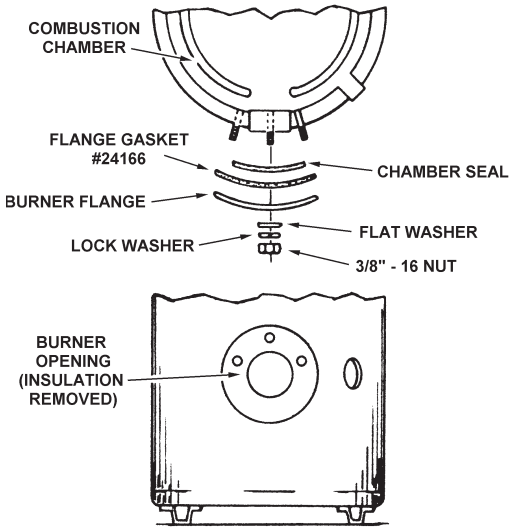

ASSEMBLY OF THE OIL BURNER TO THE HEATER FIGURE 14

3. Place the flat washers and lock washers over the studs and fasten the burner in place with the 3/8" - 16 nuts as shown.

Connect the oil line(s) and electrical wires to the burner as follows:

1. The oil pump manufacturer's instructions should be checked for connection and bleeding information.

- The burner is approved for use with fuel oil not heavier than No. 2.

2. An approved, separately fused circuit with disconnect switch should be available for the oil burner. Using Figure 15, the wiring diagram below as a guide:

    - Route the 120 volt incoming line in the dual bulb thermostat, mounted on the side of the heater.

    - Bring the factory wiring from the high limit /eco and thermostat into the oil burner junction box.

    - Install field and factory wiring as shown in the wiring diagrams, figs. 15. A schematic diagram is also shown for convenience when servicing.

    - Ground the heater in accordance with the NEC code to guard against electrical shock from the heater or water system.

3. All oil burners have "interrupted ignition". . . meaning the ignition is on during the flame establishing period only.

4. Do not "test fire" the heater to complete the oil burner certificate until the tank is filled with water, see the oil burner manual.

The certificate and this manual must be left with the user for future reference.

TABLE 8 - OIL PUMP & NOZZLE SPECIFICATIONS

Heater Model	Fitting Rate (GPH) State Burner	Fitting Rate (GPH) Non State Burner	Oil Burner Pump Non-Setting PSIG	Oil Burner Nozzle Type	Oil Burner Nozzle Rating (GPH)
COF-199	1.42	1.1	110	80ºB	1.35
COF-245	1.75	1.5	100	80ºB	1.75
COF-315/315A	2.25	2.0	100	80ºB	2.25
COF-385/385A	2.75	2.5	100	80ºB	2.75
COF-455/455A	3.25	3.0	100	80ºB	3.25
COF-700/700A	5.00	4.5	100	80ºB	5.00

FUEL PUMP

GENERAL

All heaters are shipped with the pump pressure set at 100 psig except the COF-199 which is set at 110 psig.

All oil pumps are fitted for installation on single fuel line systems. The pump may be adapted for two line service by using the by-pass Plug and pump manufacturer's instructions packed with the burner.

The single-stage pumps are for single-pipe or two-pipe installations, either lift or gravity feed. On gravity feed installations the inlet pressure is not to exceed 3 psig. On one pipe lift installations the lift is not to exceed 8 ft.

The two-stage pumps are for two-pipe lift installations where the inlet vacuum does not exceed 20" hg. vacuum.

AIR BLEED PROCEDURE (Refer to oil burner manual).

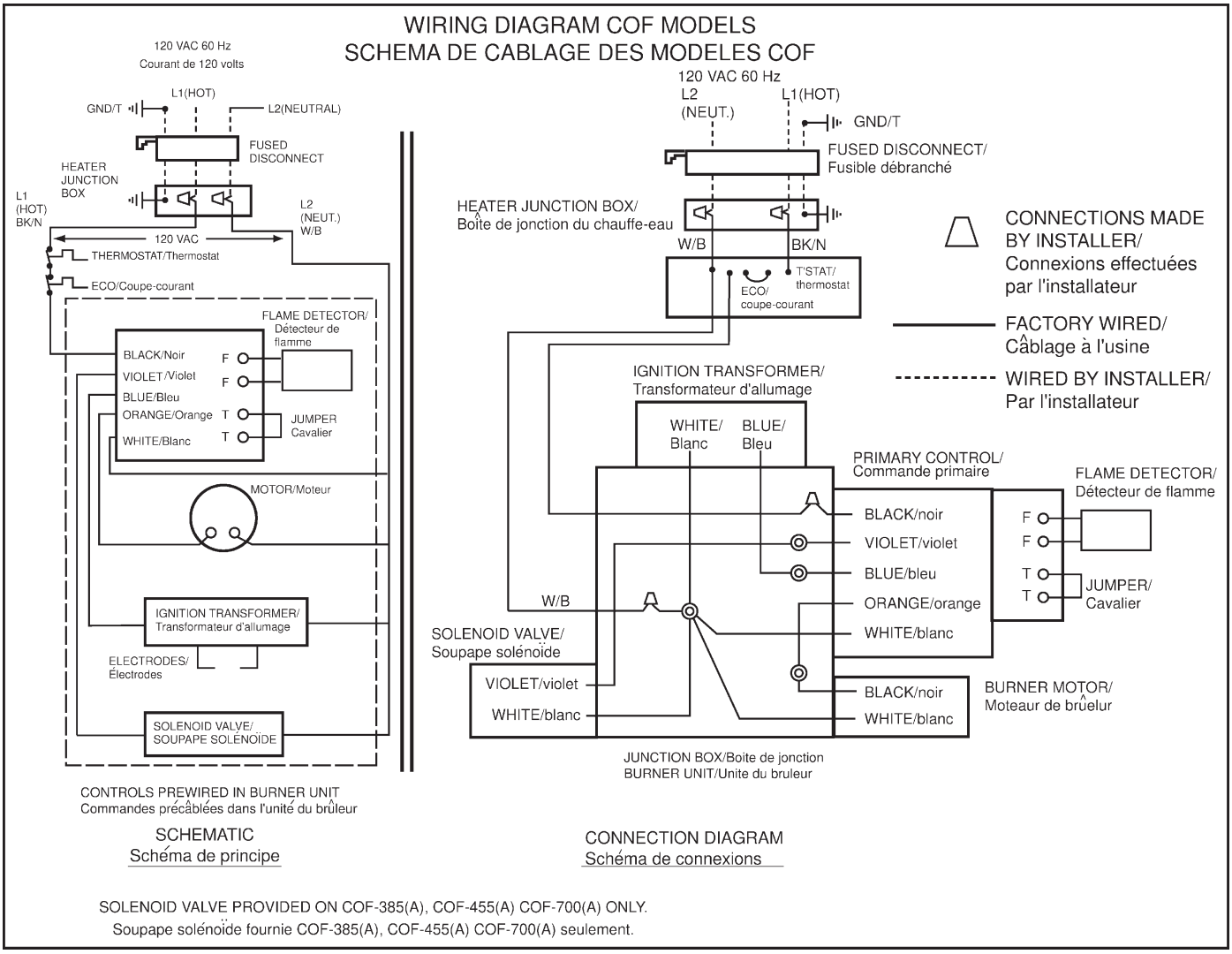

FIGURE 15

OPERATION

GENERAL

Never operate the heater unless the tank is filled with water and a temperature and pressure relief valve is installed.

FILLING

1. Oil burner electrical disconnect switch should be in the "OFF" position
2. Close the heater drain valve.
3. Open a nearby hot water faucet to allow the air in the system to escape.
4. Fully open the cold water inlet valve, filling the heater and piping.
5. Close the hot water faucet as water starts to flow from the opening, Leave the cold water inlet valve fully open. The heater is now ready to start-up if being placed in operation for the first time.

START-UP

Factory Start-Up is required for activating warranty and assuring maximum operating performance. Contact your local sales representative or Authorized Start-Up Agent to arrange a FREE Certified Start-Up.

The following checks should be made by the installer when the heater is placed into operation for the first time:

1. Check all factory and field made water, oil and electrical connections for tightness. Also check flue gas disposal provisions on top the heater.
   - Repair any water and oil leaks. Tighten electrical and flue connections as necessary.
2. Where the water heater or water heating systems includes a circulating pump, it may need to be lubricated before operated. The tube of lubricant supplied with the pump includes directions for use.
   - Field installed circulating pumps should be all bronze construction.

Be sure the oil burner, related piping, valves and controls are in place, adjusted and ready for operation before turning on the electricity.

3. Adjust the heater mounted control as follows:
   - THERMOSTAT (adjustable) set for desired water temperature.
   - It is suggested the thermostat be turned to the lowest setting which satisfies the hot water requirements of the system. This helps minimize scale formation in the heater.
   - HIGH LIMIT (not adjustable, manual reset) factory set to cutout at 195° F (90.5°C).
   - If the high limit is actuated, the safety primary control will cause the oil burner to shut down. See SAFETY PRIMARY CONTROL, page 22.
   - To reset the safety primary control, depress and hold the red button on the control for 30 seconds until the LED flashes twice.
   - Depress red button one time only. If burner does not operate after depressing red button one time, call service man.
4. Turn on the oil burner electrical disconnect switch.
5. The heater will begin normal operation on the thermostat's "call for heat".

6. To turn the heater off, open the electrical disconnect switch. If the heater is to remain inoperative for a long period of time, close the shutoff valve on the oil supply line.

WATER TEMPERATURE CONTROL



DANGER

THIS WATER HEATER IS EQUIPPED WITH AN ADJUSTABLE THERMOSTAT TO CONTROL WATER TEMPERATURE. HOT WATER TEMPERATURES REQUIRED FOR AUTOMATIC DISHWASHER AND LAUNDRY USE CAN CAUSE SCALD BURNS RESULTING IN SERIOUS PERSONAL INJURY AND OR DEATH. THE TEMPERATURE AT WHICH INJURY OCCURS VARIES WITH THE PERSONS AGE AND TIME OF EXPOSURE. THE SLOWER RESPONSE TIME OF CHILDREN, AGED OR DISABLED PERSONS INCREASES THE HAZARDS TO THEM. NEVER ALLOW SMALL CHILDREN TO USE A HOT WATER TAP, OR TO DRAW THEIR OWN BATH WATER. NEVER LEAVE A CHILD OR DISABLED PERSON UNATTENDED IN A BATHTUB OR SHOWER.

THE WATER HEATER SHOULD BE LOCATED IN AN AREA WHERE THE GENERAL PUBLIC DOES NOT HAVE ACCESS TO SET TEMPERATURES.

SETTING THE WATER HEATER TEMPERATURE AT 120°F (48.9°C) WILL REDUCE THE RISK OF SCALDS. Some states require settings at specific lower temperatures.

Figure 16 shows the approximate time-to-burn relationship for normal adult skin. Short repeated heating cycles caused by small hot water uses can cause temperatures at the point of use to exceed the thermostat setting by up to 20°F. If you experience this type of use, you should consider using lower temperature settings to reduce scald hazards.

Water Temperature °F	Time for 1st Degree Burns (Less Severe Burns)	Time for Permanent Burns 2nd & 3rd Degree (Most Severe Burns)
110	(normal shower temp.)	
116	(pain threshold)	
116	35 minutes	45 minutes
122	1 minute	5 minutes
131	5 seconds	25 seconds
140	2 seconds	5 seconds
149	1 second	2 seconds
154	instantaneous	1 seconds
(U.S. Government Memorandum, C.P.S.C., Peter L. Armstrong, Sept. 15, 1978)		

FIGURE 16

Valves for reducing point-of-use temperature by mixing cold and hot water are available. Also available are inexpensive devices that attach to faucets to limit hot water temperatures. Contact a licensed plumber or the local plumbing authority.

The water temperature is controlled by a thermostat, fig. 17, which has two sensing elements. One sensor is located near the top of the tank and the other is near the center. The thermostat is set in the lowest position before the heater leaves the factory.

The thermostat temperature dial, fig. 17, is accessible by taking off the access cover and removing the control cover. The dial is adjustable and may be set for 120° (48.9°C) to 180°F (82.2°C) water temperature, but 120°F (48.8°C) is the recommended starting point. It is suggested the dial be placed in the lowest setting which produces an acceptable hot water supply. This will always give the most energy efficient operation. The temperature control has a 4°F (2.2°C) fixed differential.

HIGH LIMIT SWITCH (E.C.O)

The dual bulb controller (fig.17) contains the high limit (energy cutoff) sensor. The high limit switch interrupts main burner gas flow should the water temperature reach 195°F (90.5°C).

In the event of high limit switch operation, the appliance cannot be restarted unless the water temperature is reduced by 20°F (11.1°C) (approx.) and the high limit reset button on front of limit control (fig.17) is depressed.

Continued manual resetting of high limit control, preceded by higher than usual water temperature is evidence of high limit switch operation. Contact your dealer or servicer if continued high limit switch operation occurs.

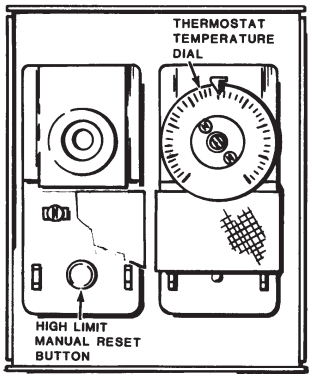

DUAL-BULB THERMOSTAT (COVER REMOVED)
FIGURE 17

BURNER CERTIFICATE (COMBUSTION TEST)

The Commercial Standard CS75 Oil Burner Certificate form must be filled in and posted in the vicinity of the water heater.

Instructions for filling in certificate are on the back of the certificate. This must be done by the installer at the time the heater is first operated. The certificate is in the oil burner manual.

SELF-CLEANING ELIMINATOR

These units include a self-cleaning eliminator installed in the front water inlet. See figure 18. The eliminator must be oriented correctly for proper function. There is a marked range on the pipe nipple portion of the eliminator, that must be aligned with the top of the inlet spud. A label above the jacket hole has an arrow that will point to the marked portion of the pipe nipple if the orientation is correct. If the arrow does not point within the marked range on the pipe nipple, adjust the pipe nipple to correct. A pipe union is supplied with the eliminator to reduce the probability of misaligning the eliminator accidentally while tightening the connection to the inlet water supply line. Improper orientation of the eliminator can cause poor performance of the heater and can significantly reduce outlet water temperatures during heavy draws.

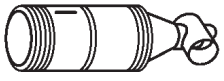

FIGURE 18

DRAINING

The water heater must be drained if it is to be shut down or exposed to freezing temperatures. Maintenance and service procedures may also require draining the heater.

1. Turn off the oil burner electrical disconnect switch.
   - If required by the reason for draining the heater, turn off the oil line supply valve.
2. Close the cold water inlet valve to heater.
3. Open a nearby hot water faucet to vent the system.
4. Open the heater drain valve.
5. If the heater is being drained for an extended shutdown, it is suggested the drain valve be left open during this period.
   - Follow FILLING instructions when restarting hot water service.

MAINTENANCE

GENERAL

Water heater maintenance includes periodic tank flushing and cleaning, and removal of lime scale. The oil burner should be inspected and adjusted to maintain proper combustion. Where used, the water heating system circulating pump should be oiled (See table 9).

The depth of lime buildup should be measured periodically. Heaters will have about 2" (50.8 mm) of lime buildup when the level of lime has reached the bottom of the cleanout opening or about 1" of lime buildup if it has reached the drain valve opening. A schedule for deliming should be setup, based on the amount of time it would take for a 1" (25.4 mm) buildup of lime.

Example 1: Initial inspection shows 1/2" (12.7 mm) of lime accumulation. Therefore, the heater can be delimed once a year.

Example 2: Initial inspection shows 2" (50.8 mm) of lime accumulation. Therefore, the heater should be delimed every 3 months.

Following are the instructions for performing some of the recommended maintenance. Oil burner inspection and adjustment should be performed by a competent technician.

TABLE 9 SUGGESTED MAINTENANCE SCHEDULE

Relief Valve	Lift Lever	Semi-Annually	
Tank	Flushing	Monthly	
	Sediment Removal	Semi-Annually	
	Anode Inspection	Semi Annually	
	Lime Scale Removal	As Required	UN•LIME® Delimer
Circulating Pump	Oiling	Four Months	SAE No. 20 non-detergent motor oil
Oil Burner	Inspection and Adjustment	Semi-Annually	Combustion test kit & test specifications (Page 26)
	Nozzle Replacement	Semi-Annually	New Nozzle
Flue Baffle Pipe	Cleaning	Annually	Wire Brush
Venting System	Inspected	Semi-Annually	

* Replacement gasket, A.O. Smith Part No. 99038

RELIEF VALVES

At least twice a year, the system relief valves should be checked to ensure that they are in operating condition. To check a relief valve, lift the lever at the end of the valve several times. The valve should seat properly and operate freely.

If water does not flow, remove the valve and inspect for obstructions or corrosion. Replace with a new valve of the recommended size as necessary. Inspection of the valve should be performed at least every three years. Do not attempt to repair the valve, as this could result in improper operating and a tank explosion. In areas with poor water conditions, it may be necessary to inspect the T&P valve more often than twice a year.

DANGER

BEFORE MANUALLY OPERATING A RELIEF VALVE, MAKE SURE THAT DRAIN LINE HAS BEEN ATTACHED TO THE VALVE TO DIRECT THE DISCHARGE TO AN OPEN DRAIN. FAILURE TO TAKE THIS PRECAUTION COULD MEAN CONTACT WITH EXTREMELY HOT WATER PASSING OUT OF THE VALVE DURING THIS CHECK OPERATION.

If the temperature and pressure relief valve on the heater discharges periodically or continuously, it may be due to thermal expansion of water in a closed water supply system, or it may be due to a faulty relief valve.

Thermal expansion is the normal response of water when it is heated. In a closed system, thermal expansion will cause the system pressure to build until the relief valve actuation pressure is equaled. Then, the relief valve will open, allowing water to escape, slightly lowering the pressure.

Your water supplier or local plumbing inspector will know how to best correct this situation. Two common corrections are listed in the Checklist and Service Information which appears later in this manual.

ABOVE ALL, DO NOT PLUG THE TEMPERATURE AND PRESSURE RELIEF VALVE. THIS IS NOT A SOLUTION AND CAN CREATE A HAZARDOUS SITUATION.

FLUSHING

1. Turn off the oil burner electrical disconnect switch.
2. Open the drain valve and allow water to flow until it runs clean.
3. Close the drain valve when finished flushing.
4. Turn on the oil burner electrical disconnect switch.

SEDIMENT REMOVAL

Water borne impurities consist of fine particles of soil and sand which settle out and form a layer of sediment on the bottom of the tank.

For convenience, sediment removal and lime scale removal should be performed at the same time.

LIME SCALE REMOVAL

The amount of calcium carbonate (Lime) released from water is in direct proportion to water temperature and usage, see chart. The higher the water temperature or water usage , the more lime deposits are dropped out of the water. This is the lime scale which forms in pipes, heaters and on cooking utensils.

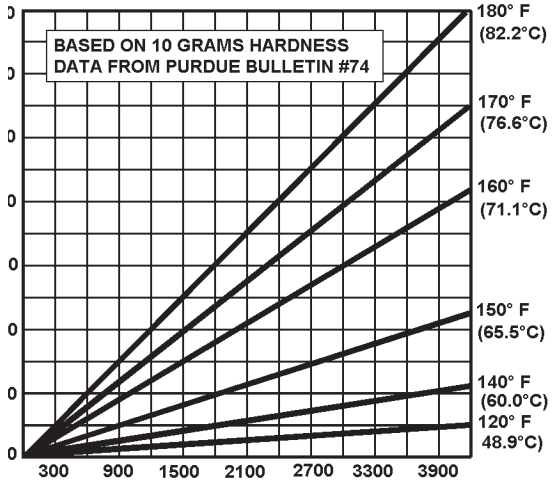

WATER USAGE IN GALLONS PER DAY POUNDS OF LIME DEPOSITED VS. TEMPERATURE AND WATER USAGE

FIGURE 18A.

Lime accumulation not only reduces the life of the equipment but also reduces efficiency of the heater and increases fuel consumption.

The usage of water softening equipment greatly reduces the hardness of the water. However, this equipment does not always remove all of the hardness (lime). For this reason it is recommended that a regular schedule for deliming be maintained.

Sediment and lime scale removal may be accomplished through the cleanout opening furnished on the water heater, see FEATURES, page 2. The heater must be drained, see DRAINING, page 12, before removing cleanout cover on tank.

To dissolve and remove the more stubborn mineral deposits, A. O. Smith UN•LIME® Professional Delimer or equivalent should be used.

A. O. Smith UN•LIME® Delimer is an easy-to-handle patented food grade acid formulated specifically for lime scale removal from all types of water using equipment and is available in 1 gallon (Part No. 4763) and 5 gallon (Part No. 4813) sizes. Hydrochloric base acids are not recommended for use on glass-lined tanks.
UN•LIME® Professional Delimer:
Part No: 9005416105 4 - 1 Gallon (case)
Part No: 9005417105 1 - 5 Gallon

A. O. Smith Form No. 4800, entitles Why? When? & How? describes tank cleaning methods and materials. UN•LIME® and booklet may be obtained through your A.O. Smith dealer or distributor.

To clean heater through cleanout opening, proceed as follows:

1. Turn off water inlet valve, the oil burner electrical disconnect switch and open drain valve and allow all water to be drained from heater.

2. Remove outer cover plate from lower side of heater jacket.

3. Remove six (6) hex head screws securing tank cleanout plate and remove plate.

4. Remove lime, scale. or sediment using care not to damage the glass lining.

5. Inspect cleanout plate gasket. If new gasket is required, replace with A. O. Smith Kit (Part no. 9004099215).

6. Install cleanout plate. Be sure to draw plate up tight by tightening screws securely.

7. Close drain valve, open water inlet line and turn on the oil burner electrical disconnect switch.

8. Check for water leakage.

9. Replace outer jacket cover plate.

Flo-jug Method of Deliming

The Flo-Jug is the standard 5 gallon container for UN•LIME® -or- it is available as a deliming kit with UN•LIME®, hose and fittings. Contact your dealer, distributor or the A. O. Smith Corporation. Figure 18 illustrates most of the ollowing steps.

1. The heater should be prepared for deliming as described in the "Why? When and How" booklet. The relief valve may also be delimed at this time.

2. With the Flow-Jug upright:

   - Take off cap, remove cover under opening and install 3/4" x 4" brass pipe nipple.
   - Drill or punch a 3/16" vent hole in handle. A stainless steel screw is included with the Flo-Jug kit. This screw is to be installed in the vent hole when Flo-Jug is not in use.
   - Remove drain valve from heater and insert a 3/4" x 4" drain nipple.

   - Connect the clamp 1" I. D. x 3" hole to Flo-Jug and drain nipple.

3. Lift the Flo-Jug to the POUR POSITION and permit the UN•LIME® to flow into the heater as rapidly as possible.

   - Be sure to keep the vent just above the liquid level.

4. Place the Flow-Jug in the DELIME POSITION.

   - It may be necessary to place the empty jug on its carton to trap the solution in the heater.

   - Allow the UN•LIME® to attack the water scale for 5 minutes.

5. Lower the Flo-Jug to the DRAIN POSITION and allow the UN•LIME® to flow out of the heater as rapidly as possible.

   - Observe the vent hole and elevate the jug slightly if there is a possibility of spillage.

   - Deliming activity is indicated by foaming on the surface of the solution.

6. Continue the deliming process:

   - Raise jug to POUR POSITION. Allow solution to flood into heater.

   - Place jug to DELIME POSITION for 5 minutes. Solution is at work in heater.

   - Lower jug to DRAIN POSITION and allow solution to flow out. Observe foaming.

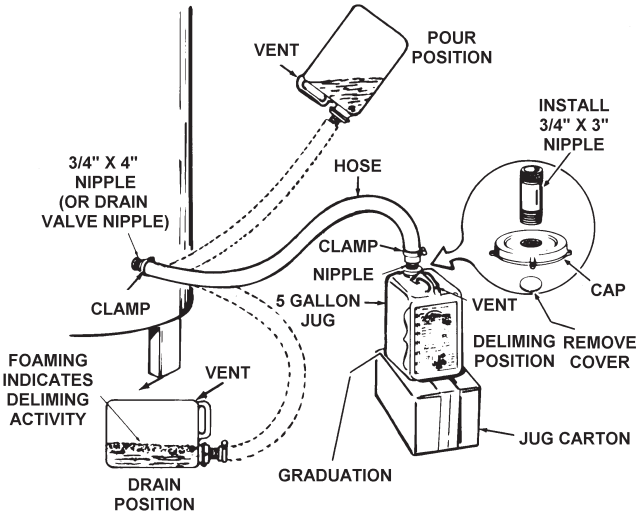

DELIMING THE COF WATER HEATER
FIGURE 18

7. After one hour, or earlier if the deliming activity (foaming) stops, inspect the tank interior.

   - Drain the UN•LIME® back into jug, DRAIN POSITION, and then stand jug in DELIME POSITION.

   - Remove clamp, hose and pipe nipple from heater drain opening.

   - Observe interior through opening - a small flashlight works well.

   - If the interior still shows water scale, the deliming process should be continued.

- To check UN•LIME® for continued use or reuse, place some lime scale or white chalk into a glass with a small amount of the solution. If the material is vigorously dissolved by the solution, the UN•LIME® can be reused. If not, then UN•LIME® has been weakened and should be replaced.

8. When deliming has been completed, the heater should be flushed for 3 to 5 minutes with fresh water.

   - Remove the deliming equipment, install the drain valve, open the cold water inlet line and allow water to flow through heater and out the drain valve. Don't forget to plug vent and cap opening in Flo-Jug.

9. When flushing is completed:

   - Fill heater being certain to expel air from tank through a nearby hot water faucet.

   - Replace relief valve, removed for deliming.

   - Restore oil, water and electrical supply to heater.

   - Check for water leakage.

10. Flo-Jug Cleanup.

    - Allow scale to separate from UN•LIME® and settle on bottom of Flo-Jug.

    - Pour off UN•LIME® into plastic container and check for reuse.
    - Rinse sediment from Flo-Jug.

    - If UN•LIME® is reusable , pour back into Flo-Jug. Be sure to plug vent and cap opening.

CIRCULATING PUMP

The water heater or water heating system may include a circulating pump. Where used, it may need to be lubricated once every four months with SAE No. 20 non-detergent motor oil or as directed by the manufacturer.

- Place 2 or 3 teaspoons in the bearing oil cup and 10 to 12 drops in the motor oil cups. Lubricate as required by manufacturer.

SOOT REMOVAL

Soot must be removed semi-annually from the heater and flow passages to insure efficient operation of the heater.

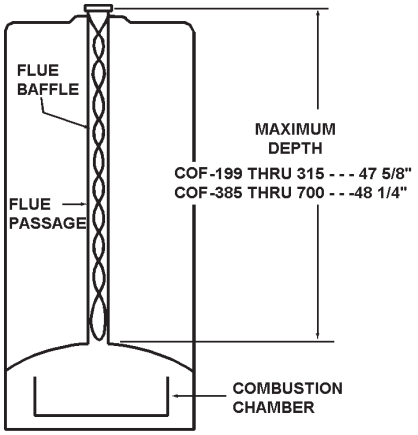

A TYPICAL HEATER FLUEWAY AND FLUE BAFFLE
FIGURE 19

1. Remove chimney connector and top cover of heater from heater. Clean out all soot deposits from connector and chimney opening. A wire brush is recommended for this operation.

2. Remove flue baffles by lifting from tank.

3. Using a wire brush, remove soot from flue passages in heater tank.

CAUTION: While cleaning tank flue passages, care must be taken that brush does not come in contact with the top of the combustion chamber as damage could occur to the combustion chamber lining. Do not allow the brush to enter the heater flue more than noted in fig. 19.

4. Remove oil burner assembly and using a vacuum cleaner, remove all loose soot from combustion chamber area. Avoid contact with combustion chamber as it can be damaged quite easily.

   - If flange gasket is damaged, replace with A. O. Smith Part No. 24165

5. Upon completion of cleaning, reassemble the heater. (It may be necessary to apply new sealer tape to the top cover to ensure proper venting. New sealer tape can be ordered from A. O. Smith Water Products Company).

6. Return the heater to operation by following the start-up instructions on page 11.

VENT SYSTEM

Examine the vent system every six months for obstructions and/or deterioration of vent piping. Remove any soot or obstructions and replace damaged vent piping.

INSTALLATION DIAGRAMS

ONE TEMPERATURE - ONE HEATER VERTICAL STORAGE TANK FORCED CIRCULATION WITH OR WITHOUT BUILDING RECIRCULATION

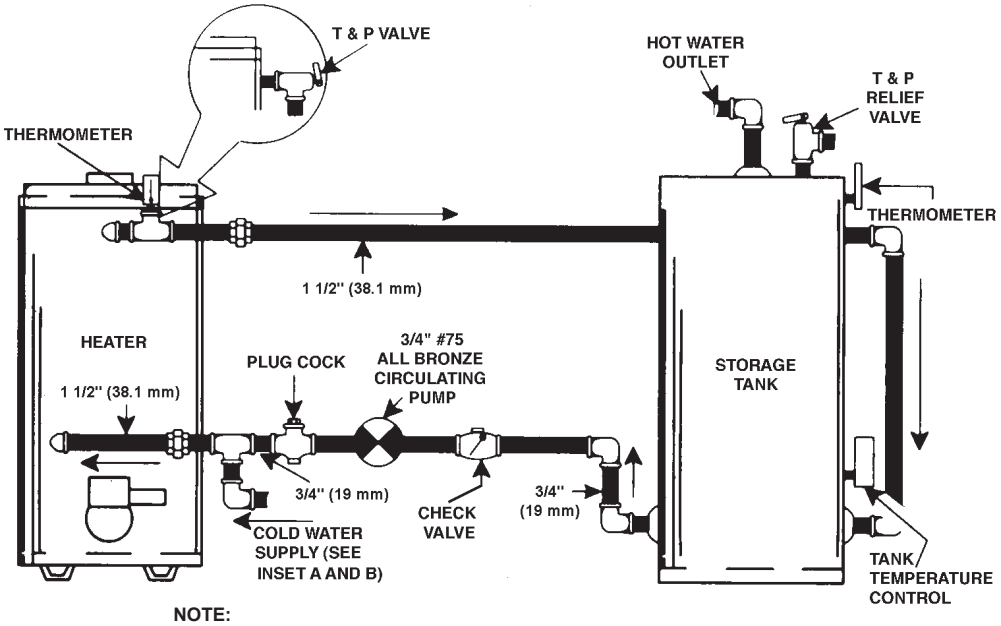

NOTE:
WHEN USING A A.O. Smith T-140,200,350,OR 400 STORAGE TANK, USE LOWER 3/4" OPENING FOR TANK TEMP.CONTROL

SCALD PREVENTION

HOT WATER CAN SCALD IF USED CARELESSLY OR IN UNANTICIPATED MANNER.

CAUTION

IF BUILDING COLD WATER SUPPLY HAS A BACK FLOW PREVENTER, CHECK VALVE OR WATER METER WITH CHECK VALVE, PROVISIONS FOR THERMAL EXPANSION OF WATER IN THE HOT WATER SYSTEM MUST BE PROVIDED.

NOTE: CONNECT RETURN LINE FROM HOT WATER CIRCULATING LOOP (IF USED) TO COLD WATER INLET LINE.

ONE TEMPERATURE - ONE HEATER HORIZONTAL STORAGE TANK FORCED CIRCULATION WITH OR WITHOUT BUILDING RECIRCULATION

INSET B

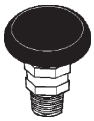

VACUUM RELIEF VALVE INSTALL PER LOCAL CODES.

* PIPE TO OPEN DRAIN

DANGER:

TEMPERATURE SETTING SHOULD NOT EXCEED SAFE TEMPERATURES AT FIXTURES. SEE WATER TEMPERATURE CONTROL WARNING ON PAGE 11. IF HIGHER PREHEAT TEMPERATURES ARE NECESSARY TO OBTAIN ADEQUATE BOOSTER OUTPUT, ADD AN ANTI-SCALD VALVE FOR HOT WATER SUPPLIED TO FIXTURES.

INSET A

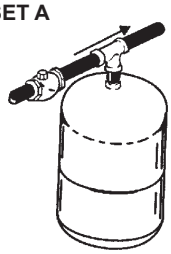

INSTALL THERMAL EXPANSION TANK IN COLD WATER SUPPLY LINE, IF CHECK VALVE OR PRESSURE REDUCING VALVE IS USED IN SUPPLY.

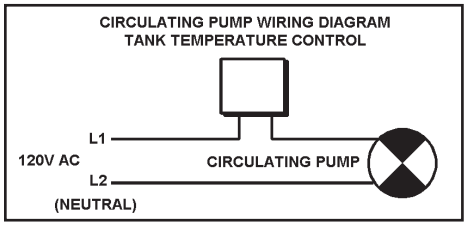

WIRING DIAGRAM FOR HEATER TO TANK LOOP AND /OR HOT WATER LOOP (IF USED)

INSTALL IN ACCORDANCE WITH LOCAL CODES

SINGLE TEMPERATURE OR BOOSTER

DANGER:
TEMPERATURE SETTING SHOULD NOT EXCEED SAFE TEMPERATURES AT FIXTURES. SEE WATER TEMPERATURE CONTROL WARNING ON PAGE 11. IF HIGHER PREHEAT TEMPERATURES ARE NECESSARY TO OBTAIN ADEQUATE BOOSTER OUTPUT, ADD AN ANTI-SCALD VALVE FOR HOT WATER SUPPLIED TO FIXTURES.

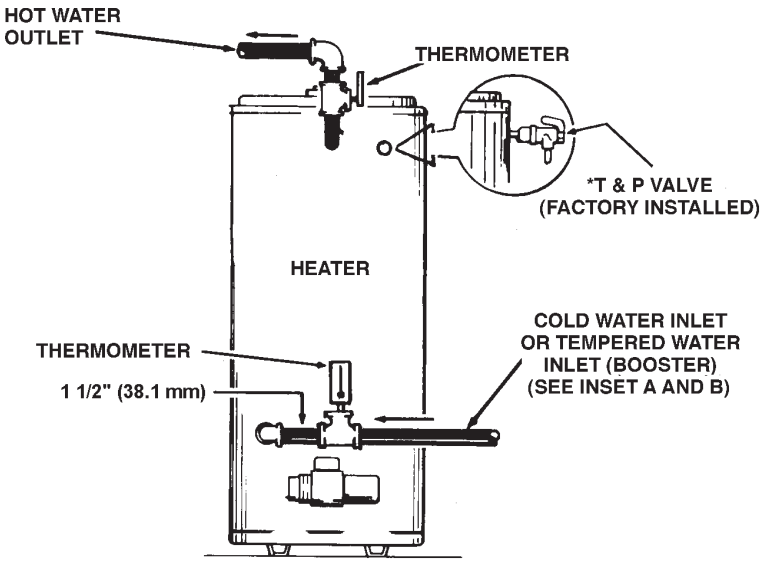

TWO TEMPERATURE - ONE HEATER HIGH TEMPERATURE STORAGE WITH OR WITHOUT RECIRCULATION

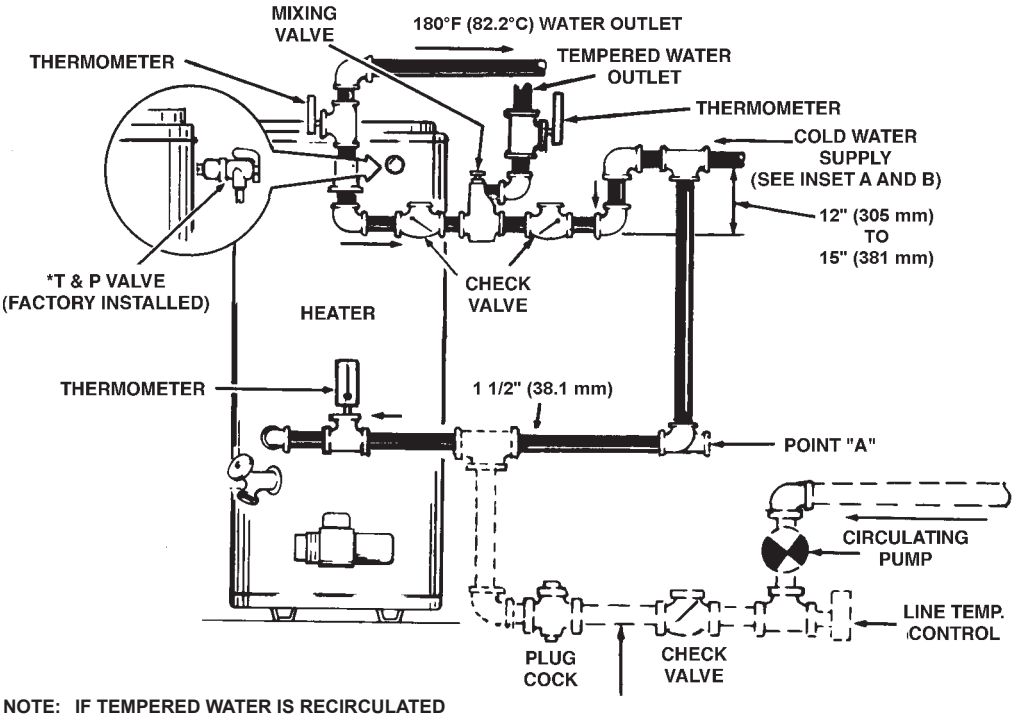

INSET B

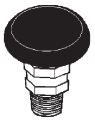

VACUUM RELIEF VALVE INSTALL PER LOCAL CODES.

INSET A

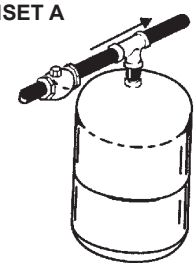

INSTALL THERMAL EXPANSION TANK IN COLD WATER SUPPLY LINE, IF CHECK VALVE OR PRESSURE REDUCING VALVE IS USED IN SUPPLY.

NOTE: IF TEMPERED WATER IS RECIRCULATED RETURN LINE SHOULD BE CONNECTED AT POINT "A"

* PIPE TO OPEN DRAIN

RETURN LINE FROM 180°F (82.2°C) CIRCULATING LOOP (IF USED)

INSTALL IN ACCORDANCE WITH LOCAL CODES

WIRING DIAGRAM FOR TEMPERED WATER LOOP (IF USED)

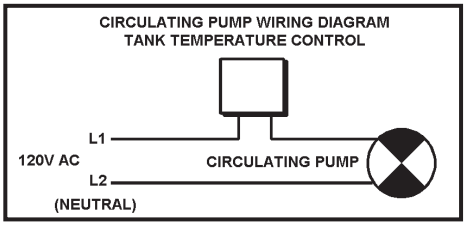

WIRING DIAGRAM FOR 180° LOOP (IF USED)

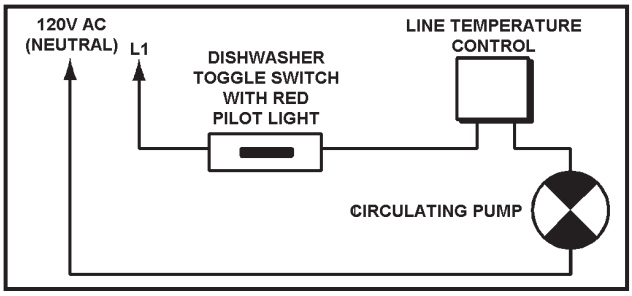

TWO TEMPERTURE - TWO HEATERS HIGH TEMPERATURE STORAGE WITH OR WITHOUT RECIRCULATION

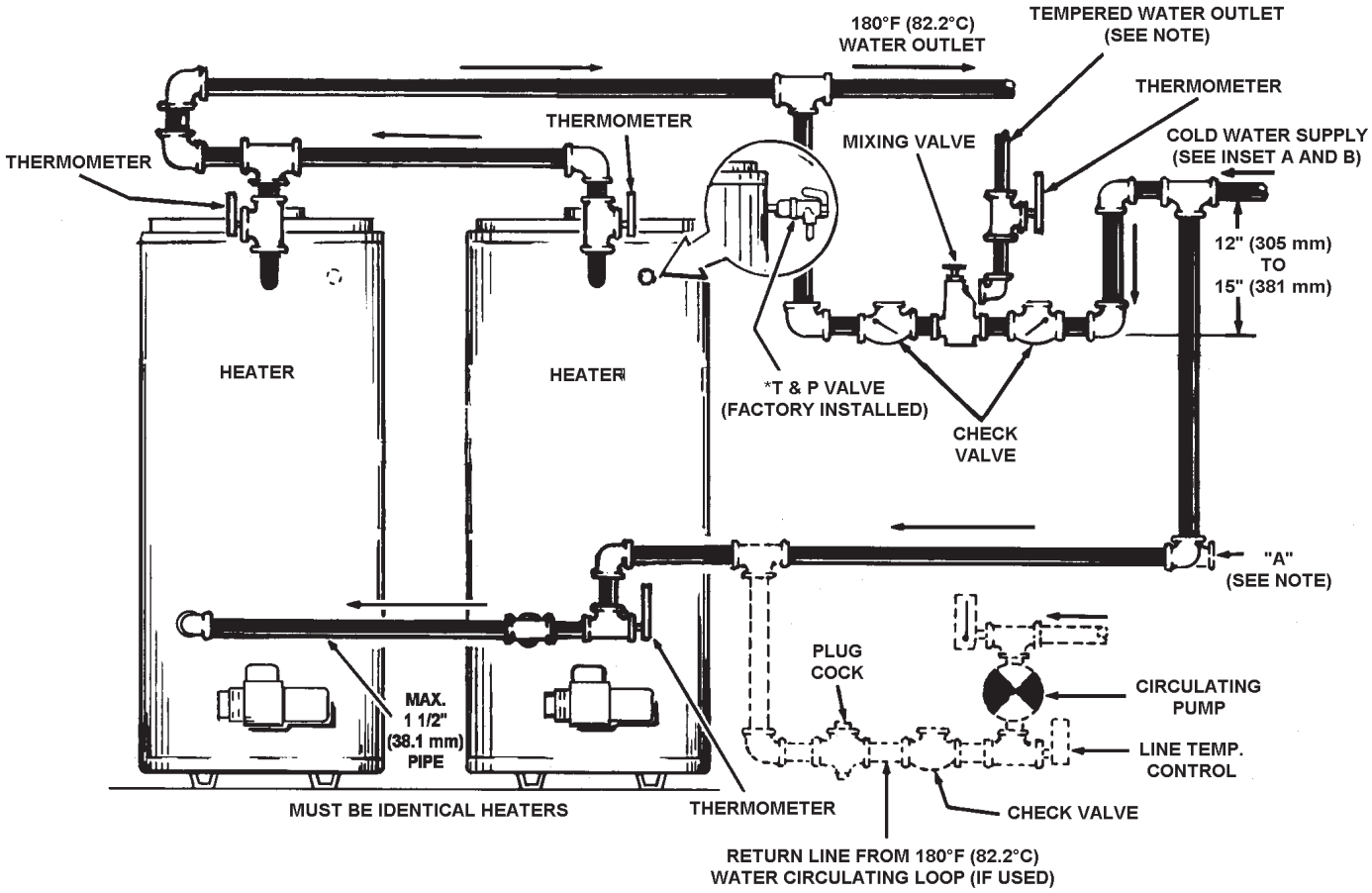

DANGER:
TEMPERATURE SETTING SHOULD NOT EXCEED SAFE TEMPERATURES AT FIXTURES. SEE WATER TEMPERATURE CONTROL WARNING ON PAGE 11. IF HIGHER PREHEAT TEMPERATURES ARE NECESSARY TO OBTAIN ADEQUATE BOOSTER OUTPUT, ADD AN ANTI-SCALD VALVE FOR HOT WATER SUPPLIED TO FIXTURES.

* PIPE RELIEF VALVE TO OPEN DRAIN

NOTE: IF TEMPERED WATER IS RECIRCULATED, RETURN LINE SHOULD BE CONNECTED AT POINT "A"

FOR MULTIPLE HEATER INSTALLATION SEE MANIFOLD KIT SPECIFICATIONS, PAGES 22-23

INSET B

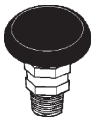

VACUUM RELIEF VALVE
INSTALL PER LOCAL CODES.

INSET A

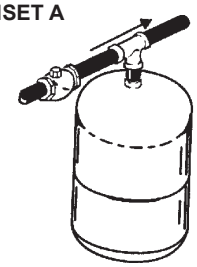

INSTALL THERMAL EXPANSION TANK IN COLD WATER SUPPLY LINE, IF CHECK VALVE OR PRESSURE REDUCING VALVE IS USED IN SUPPLY.

INSTALL IN ACCORDANCE WITH LOCAL CODES

WIRING DIAGRAM FOR TEMPERED WATER LOOP (IF USED)

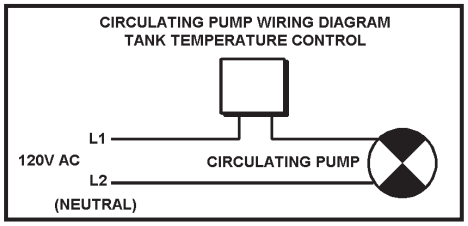

WIRING DIAGRAM FOR 180° LOOP (IF USED)

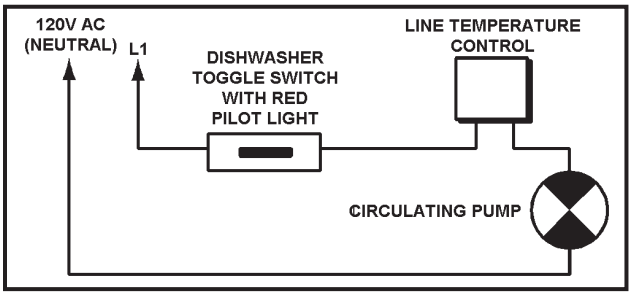

TWO TEMPERATURE - THREE HEATERS (TWO PRE-HEATERS/ONE BOOSTER) WITH OR WITHOUT CIRCULATION

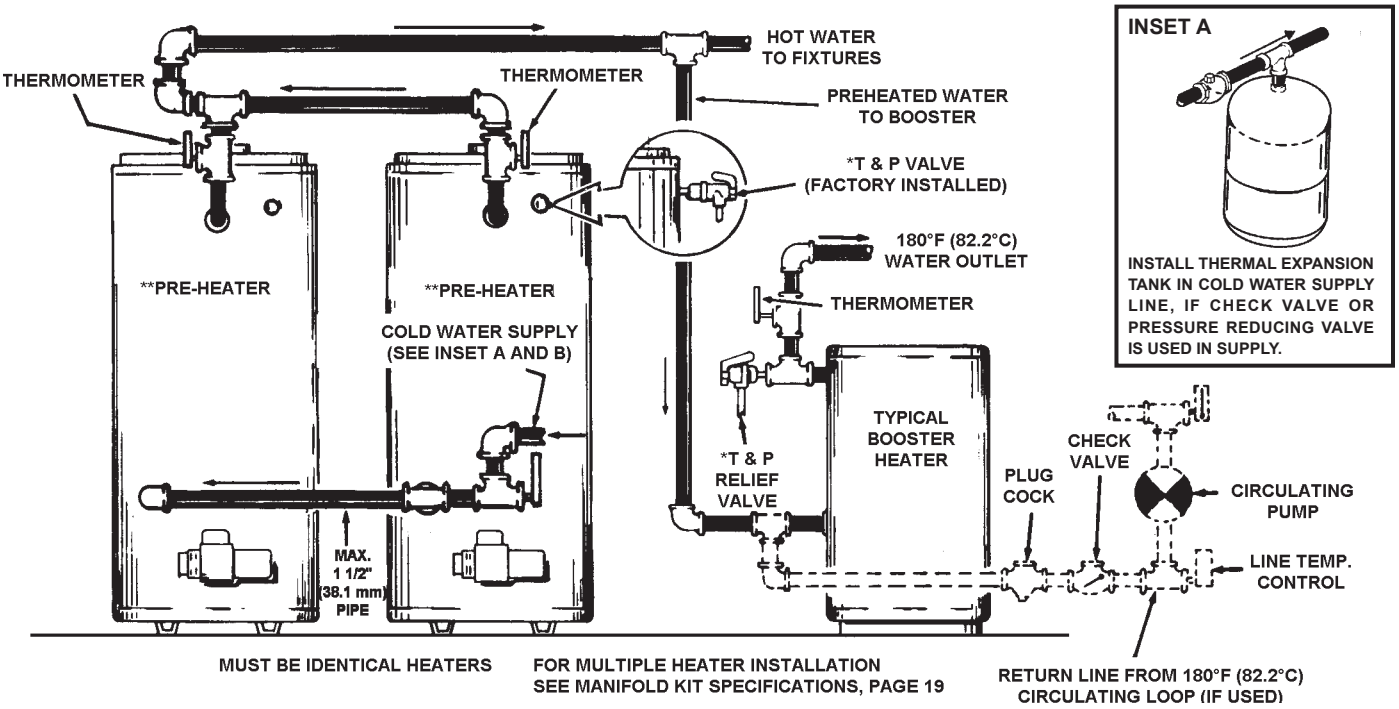

INSET A

INSTALL THERMAL EXPANSION TANK IN COLD WATER SUPPLY LINE, IF CHECK VALVE OR PRESSURE REDUCING VALVE IS USED IN SUPPLY.

DANGER:

TEMPERATURE SETTING SHOULD NOT EXCEED SAFE TEMPERATURES AT FIXTURES. SEE WATER TEMPERATURE CONTROL WARNING ON PAGE 11. IF HIGHER PREHEAT TEMPERATURES ARE NECESSARY TO OBTAIN ADEQUATE BOOSTER OUTPUT, ADD AN ANTI-SCALD VALVE FOR HOT WATER SUPPLIED TO FIXTURES.

INSET B

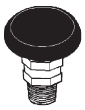

VACUUM RELIEF VALVE INSTALL PER LOCAL CODES.

TWO TEMPERATURE - TWO HEATERS (ONE PRE-HEATER/ONE BOOSTER HEATER) WITH OR WITHOUT RECIRCULATION

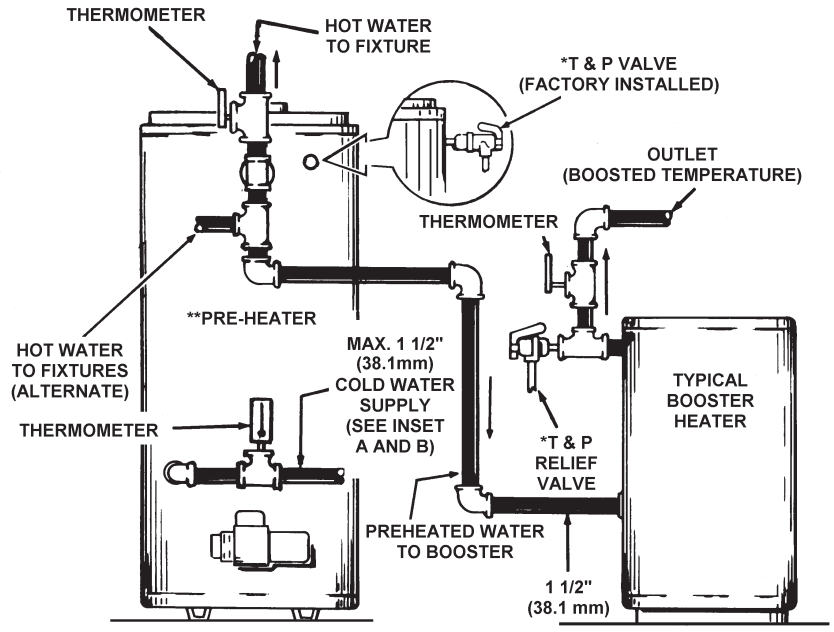

WIRING DIAGRAM FOR FIXTURE OR BOOSTER LOOP (IF USED) - OTHER THAN DISHWASHER

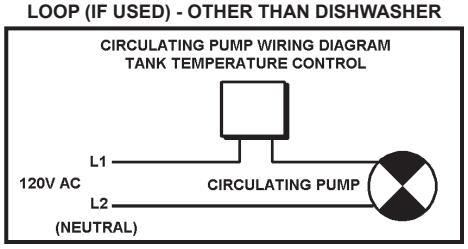

WIRING DIAGRAM FOR 180° LOOP (IF USED)

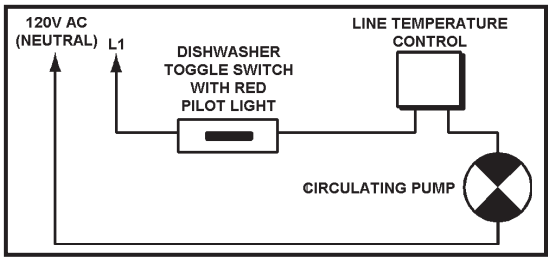

INSTALL IN ACCORDANCE WITH LOCAL CODES

* PIPE RELIEF VALVE TO OPEN DRAIN

** 140°F TO 150°F SHOULD BE MAXIMUM WATER TEMPERATURE MAINTAINED IN THE PRE-HEATERS.

120°F SHOULD BE THE MINIMUM TEMPERATURE OF WATER STORED IN THE PRE-HEATERS.

CONNECT CIRCULATING LINE FROM FIXTURES, IF USED, TO COLD WATER SUPPLY LINE OF PRE-HEATER.

CONNECT CIRCULATING LINE OF 180°F OR BOOSTED WATER, IF USED, TO INLET WATER LINE TO BOOSTER.

TWO TEMPERATURE-ONE HEATER HIGH TEMPERATURE STORAGE WITH RECIRCULATION OF SANITIZING LOOP

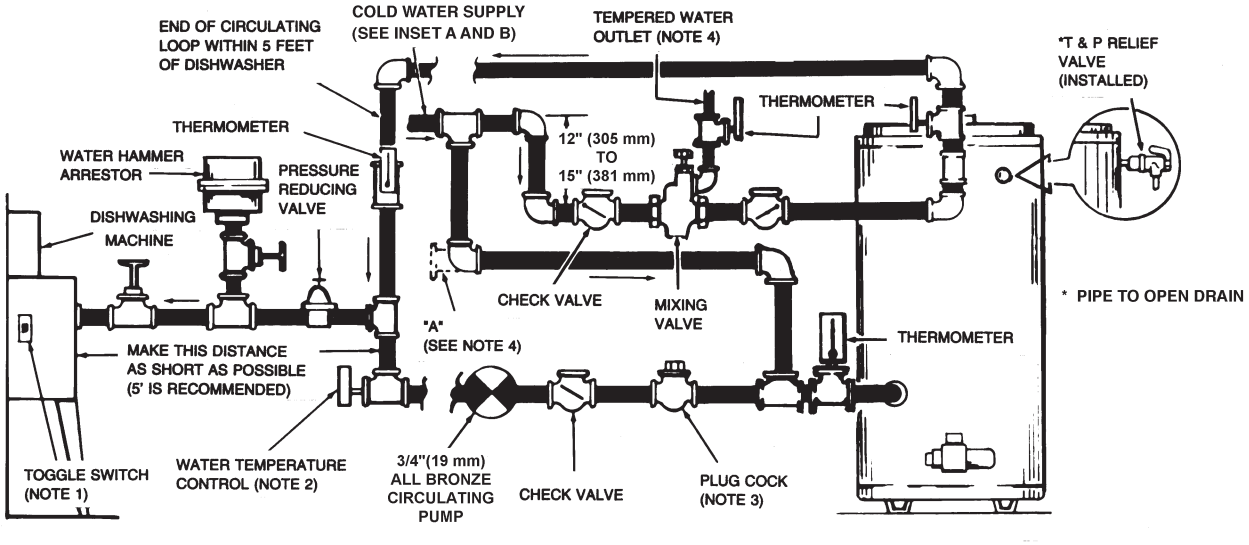

NOTE 1: TOGGLE SWITCH CONTROLS 180°F WATER CIRCULATION. INSTALL ON OR CLOSE TO DISHWASHING MACHINE . TOGGLE SWITCH MUST BE CLOSED (ON) DURING THE RINSE OPERATION AND OPEN (OFF) WHEN DISHWASHER IS NOT OPERATING.

NOTE 2: INSTALL LINE TEMPERATURE CONTROL IN AN UNINSULATED TEE BEYOND THE DISHWASHING MACHINE TAKEOFF IN THE SANITIZING LOOP. CONTROL SHOULD BE SET AT 185°F (85°C).

NOTE 3: ADJUST PLUG COCK SO THE SANITIZING LOOP FLOW RATE DOES NOT CAUSE UNNECESSARY TURBULENCE IN THE TANK.

NOTE 4: IF TEMPERED WATER IS RECIRCULATED, RETURN LINE SHOULD BE CONNECTED AT POINT "A".

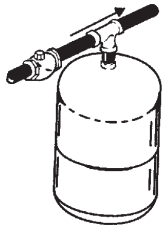

INSET A

INSTALL THERMAL EXPANSION TANK IN COLD WATER SUPPLY LINE, IF CHECK VALVE OR PRESSURE REDUCING VALVE IS USED IN SUPPLY.



INSET B

VACUUM RELIEF VALVE INSTALL PER LOCAL CODES.

WIRING DIAGRAM FOR 180° LOOP (IF USED)

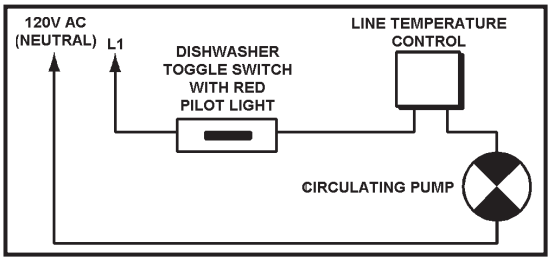

NOTES

MANIFOLD KIT COMMERCIAL OIL FIRED WATER HEATERS

Precision cut type "L" all copper A.O. Smith manifold kits assure water flow balance of all units. Without this balance, the full water heating and storage potential of the system cannot be achieved. Plus, the units with the higher water flow may have a shortened life. Unions and T & P valves shown in piping diagrams are not included in the manifold kits.

Dimensions shown are for minimum space occupied by complete assemblies. Service space in front of units must be added.

DANGER:
TEMPERATURE SETTING SHOULD NOT EXCEED SAFE TEMPERATURES AT FIXTURES. SEE WATER TEMPERATURE CONTROL WARNING ON PAGE 11. IF HIGHER PREHEAT TEMPERATURES ARE NECESSARY TO OBTAIN ADEQUATE BOOSTER OUTPUT, ADD AN ANTI-SCALD VALVE FOR HOT WATER SUPPLIED TO FIXTURES.

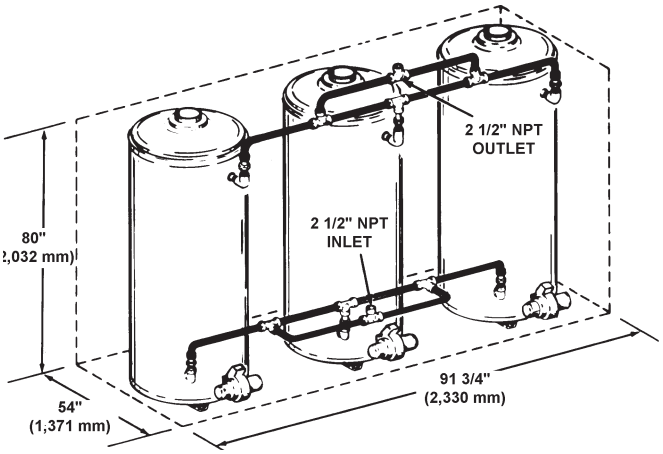

THREE UNIT MANIFOLD KIT (PART NO. 9003427205)

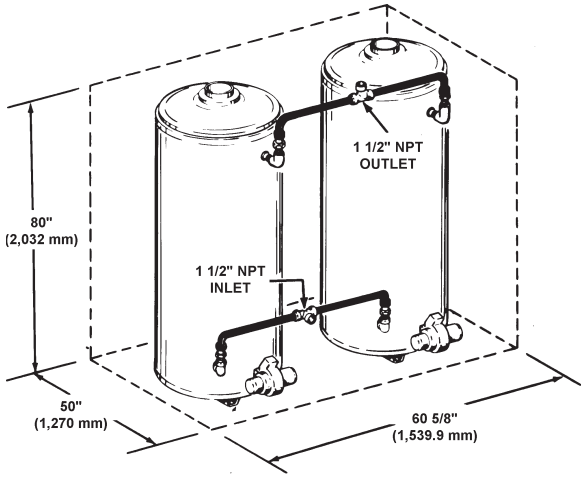

TWO UNIT MANIFOLD KIT (PART NO. 9003426205)

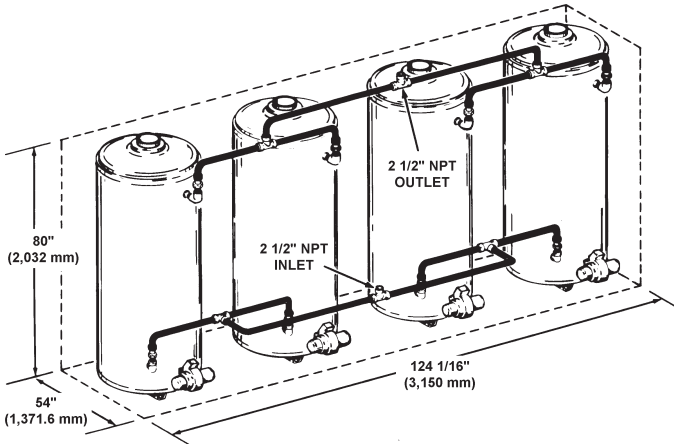

FOUR UNIT MANIFOLD KIT (PART NO. 9003428205)

CHECK LIST AND SERVICE INFORMATION

IMPORTANT

The installer may be able to observe and correct certain problems which might arise when the unit is put into operation or when it is refired after a prolonged shut-down. HOWEVER, it is recommended that only qualified servicemen, using appropriate test equipment, be allowed to service the heater.

DANGER
BE SURE TO TURN OFF THE ELECTRICITY WHENEVER POSSIBLE OR APPROPRIATE WHEN CHECKING EQUIPMENT.

ELECTRICAL WIRING REPLACEMENT

If any of the original wiring, as supplied with the appliance, must be replaced, it must be replaced with 16 AWG, or greater, copper conductor with 600V, 105°C rated, thermoplastic insulation.

NOT ENOUGH OR NO HOT WATER

1. Be certain the oil burner electrical disconnect switch serving the water heater is in the ON position.
2. Check the fuses.
   - The oil burner electrical disconnect switch usually contains fuses.
3. The capacity of the heater may have been exceeded by a large demand for hot water.
   - Large demands require a recovery period to restore water temperature.
4. Colder incoming water temperature will lengthen the time required to heat water to the desired temperature.
   - If the heater was installed when incoming water temperature was warm, colder water creates the effect of less hot water.
5. Look for hot water wastage and leaking or open hot water faucets.
6. Sediment or lime scale may be affecting water heater operation. Refer to MAINTENANCE for details.
7. Heater or burner may be dirty.
   - Clean all heater flue pipes and flue connector.
   - Have burner properly cleaned and readjusted.

8. Burner may not be firing at proper rate.
   - Check nozzle size.
   - Check fuel pump pressure setting.
   - COF-199 . . . . . 110 psig
   - All others . . . . . 100 psig
9. Burner may be short cycling. Short cycling (too frequent off and on) of burner will cause sooting. If unit or burner become dirty at frequent intervals, after correcting the dirt condition also correct the control settings (or other cause of the short cycling).
10. Oil burner fan wheel may be dirty.
    - Clean fan wheel with a stiff brush.
11. Draft regulator may be stuck.
    - Check to see if valve swings freely. Clean, if vane is stuck.
12. Priming control safety reset is open.
    - Reset safety switch on burner mounted primary control, see SAFETY PRIMARY CONTROL, page 22.
13. Burner motor safety reset is open.

BURNER STARTS-WON'T OPERATE

1. No oil in tank.
2. Oil line valve closed.
3. Loose connection in primary control.
   - Check and tighten all wire connections, see SAFETY PRIMARY CONTROL, page 22.
4. Electrode out of adjustment.
   - Clean firing head and readjust electrodes.
5. Clogged burner nozzle.
   - Replace with new nozzle, see nozzle chart, page 9, table 8.
   - Nozzle should be replaced semiannually.
6. Dirty filter.
   - Replace element in oil filter.

WATER IS TOO HOT

1. Refer to WATER TEMPERATURE, page 11.

WATER HEATER MAKES SOUNDS

1. Sediment or lime scale accumulations cause noises when the tank bottom should be cleaned. Refer to MAINTENANCE, page 12-13 for details.
2. Some of the electrical components of the water heater makes sounds which are normal.
   - Contacts click or snap as the heater starts and stops.
   - Transformers often hum.

WATER LEAKAGE IS SUSPECTED

1. Check to see if the water heater drain valve is tightly closed.
2. The apparent leakage may be condensation which forms on cool surfaces of the heater and piping.
3. If the outlet of the relief valve is leaking it may represent:
   - Excessive water pressure.
   - Excessive water temperature.
   - Faulty relief valve.

Excessive water pressure is the most common cause of relief valve leakage. It is often caused by a "closed system". If a check valve is in the inlet system it will not permit the expanded hot water volume to equalize pressure with the main. The relief valve must release this water or the water heater or plumbing system will be damaged. This condition is not covered by the limited warranty. The solution is to add a thermal expansion tank between the check valve and the water heater.

BURNER WON'T START

When the thermostat calls for heat but the burner won't start, check to make sure that you have proper voltage to the primary control.

CAUTION

When checking the low voltage circuit at the control, DO NOT TOUCH THERMOSTAT WIRES TO FLAME DETECTOR TERMINALS AS THIS WILL BURN OUT THE SENSOR IN THE SAFETY PRIMARY CONTROL.

If the voltage checks normal:

1. Flame detector may be sooted or seeing false light and will not let the motor replay pull in.
2. Loose wiring.
3. Bad flame detector (mounted inside housing beneath transformer).
4. Reset red safety button (primary control).
5. Defective primary control.
6. Reset motor protector.

BURNER STARTS BUT FAILS TO RUN

When the burner starts (motor running) but flame is not established, the control will lock out on safety in about 15 seconds. If the control does not lock out on safety, then the control is defective and should be replaced. When the motor is running but flame is not established, then the problem becomes:

1. There is insufficient or no oil getting into the combustion chamber.
2. There is no spark to ignite the oil.

If the problem is insufficient or no oil getting into the combustion chamber, check for the following:

1. Dirt or water in the supply line.
2. Slipping coupling between motor and pump.
3. Defective pump.
4. Clogged, defective or too small a nozzle.
5. Oil tank empty.
6. Clogged filter in oil line.
7. Restriction or kink in fuel line.
8. Ice in fuel line.
9. Air leak in inlet connections.

If the problem is not getting a spark to ignite the oil, check for the following:

1. Loose wiring.
2. Bad ignition transformer.
3. Low voltage.
4. Crack in electrode porcelain insulators.
5. Electrodes carboned or out of adjustment.
6. Weak or no contact between bus bars and terminals of transformer.

NORMAL START, BUT LOCKS OUT ON SAFETY

When the thermostat calls for heat and the burner starts normally but the locks out on safety after about 15 seconds:

1. Improper setting of combustion air (too much air).
2. Weak or dirty flame detector.
3. Improper positioning of flame detector.
4. Bad flame detector.
5. Wiring from flame detector to primary not continuous or not making good contact.
6. Bad safety primary control.
7. Clogged, defective or to small sized nozzle.

SAFETY PRIMARY CONTROL

Normal Burner Cycle

Although a normal burner cycle does not create a service problem, it is important to know what happens to better understand the problem when the unit is not operating properly.

The instant the thermostat calls for heat, the flame detector sees darkness and causes the sensor to conduct current. When the sensor conducts current, the motor relay coil pulls in, starting the burner motor and energizing the ignition transformer through the motor relay contacts. At the same instant the motor relay coil pulls in, the safety heater is energized.

When flame is established, the resistance of the flame detector drops (providing the flame detector can see the flame properly) which causes the sensor to block the current. When the sensor blocks, the safety heater drops out of the circuit and the motor relay coil continues to hold in through a set of holding contacts on the motor relay until the thermostat is satisfied and the burner shuts down.

FLAME FAILURE AFTER NORMAL IGNITION

If, for some reason, there is a flame out, the flame detector sees darkness which causes the sensor to conduct current and again energize the safety heater. In approximately 15 seconds the safety contact will open and shut down the burner. The safety contacts of the safety primary control are the manual reset type, which means that the red safety button must be reset before trying again for ignition. When this occurs, allow about 5 minutes for safety heater to cool before depressing the red safety button.

Depress red button one time only. If burner does not operate after depressing red button one time, check combustion chamber. If combustion chamber is soaked with oil the combustion chamber must be replaced.

Some of the possible reasons for flame failure after normal ignition has occurred are:

1. Dirt or water in the supply line.
2. Pump loosing prime.
3. Bad motor.
4. Erratic or low pressure at fuel pump.
5. Defective pump.
6. Loose wiring or connections.
7. Clogged or damaged nozzle.
8. Oil tank empty.
9. Oil tank not vented.
10. Clogged filter in oil line.
11. Ice in fuel line.

COMBUSTION TEST SPECIFICATIONS

GENERAL

A combustion test kit, capable of testing CO_2 content, stack temperature, draft and smoke must be available to aid in adjusting the unit and filling out the Oil Burner Certificate. A pressure gauge is needed to measure and adjust oil pump pressure.

PROCEDURE

1. Check nozzle size, see table on page 9.
2. Open air band about halfway and being certain heater is filled with water, start burner.
3. Check oil pump pressure. It should be 110 psig for the COF-199 and 110 psig for all other models. Adjust setting as necessary.
4. Allow burner to operate for 15 minutes before proceeding with test.
5. After 15 minutes operation, check the draft in chimney connector, about halfway between the heater and the draft regulator and adjust the draft regulator until the correct reading is obtained.

Draft in Chimney after 15 minutes	Reading should be between -0.03 & -0.05 of Water

6. Adjust air band until flame has smoky tips. Immediately increase air supply until the smoky tips just appear.
7. Using combustion test kit, check smoke density and CO_2 in the chimney connector.

Smoke Density	Preferably No. 1 Spot (Not Over No. 2 Spot
CO_2	9% to 12%

- Adjust air supply with air band to achieve the highest CO_2 readings with an acceptable smoke density reading. Test and readjust as necessary.

8. Check the stack temperature halfway between the heater and the draft regulator.

Stack Temperature	Min.	400° F (204°C)
	Max.	600° F (315°C)

- If stack temperature is too high, check for a soot accumulation in heater or excessive oil pump pressure.

9. Recheck combustion efficiency against specifications when final adjustments have been made.

TROUBLESHOOTING

TABLE 10 - OIL BURNER TROUBLESHOOTING

TROUBLE	CAUSE	REMEDY
No Oil Flow at Nozzle	Oil level below intake line in supply tank.	Fill tank with oil.
	Clogged strainer or filter.	Remove and clean strainer. Replace filter element.
	Clogged nozzle.	Replace nozzle.
	Air leak in intake line.	Tighten all fittings in intake line. Tighten unused intake port plug. Check filter cover and gasket.
	Restricted intake line. (High vacuum reading).	Replace any kinked tubing and check any valves in intake line.
	A two line pipe system that becomes air bound.	Check for and insert by-pass plug. Make sure return line is below oil level in tank.
	A single line pipe system that becomes air bound.	Loosen gauge port plug or air bleed valve and bleed oil for 15 seconds after foam is gone in bleed hose, Check intake line fittings for tightness. Check all fuel pump plugs for tightness.
	Slopping or broken coupling.	Replace coupling.
	Rotation of motor and fuel unit pump is not the same as indicated by arrow on the pad at top of unit.	Install fuel pump with correct rotation.
	Frozen fuel pump shaft.	Replace fuel pump. Check for water and dirt in tank.
Oil Leak	Loosen plugs and fittings.	Tighten with good quality thread sealer.
	Leak at pressure adjusting screw or nozzle plug.	Replace fuel pump.
	Blown seal (single-pipe system)	Check to see if by-pass plug has been left in fuel pump. Replace fuel pump.
	Seal leaking.	Replace fuel pump.
	Cover.	Tighten cover screws.
Noisy Operation	Bad coupling alignment.	Loosen fuel pump mounting screws slightly and shift fuel pump in different positions until noise is eliminated. Retighten mounting screws.
	Air in inlet line.	Check all connections. Use only good flare fittings.
	Tank turn on two line pipe system and inside tank.	Install return line hum eliminator.
	Partially clogged strainer or filter.	Remove and clean strainer.
	Air leak in intake line.	Tighten all fittings.
	Air leaking around cover.	Be sure strainer cover screws are tightened securely. Check for damaged cover gasket.
Low Oil Pressure	Defective gauge	Check gauge against master gauge or other gauge.
	Nozzle capacity is greater than fuel pump capacity.	Replace fuel unit with unit of correct capacity.
Improper Nozzle Cut-Off	To determine the cause of improper cut-off, insert a pressure gauge in the nozzle port of the fuel pump. After a minute of operation, shut burner down. If the pressure drops from normal operating pressure and stabilizes, the fuel pump is operating properly and air is the cause of improper cut-off. If, however, the pressure drops to 0 psi, fuel unit should be replaced. NOTE: Never use the amount of pressure drop as an indication of the quality or speed of cut-off.	
	Filter leaks.	Check face of cover and gasket for damage.
	Strainer cover loose.	Tighten 4 screws on cover.
	Air pocket between cut-off valve and nozzle.	Run burner, stopping and starting unit, until smoke and after-fire disappears.
	Air leak in intake line.	Tighten intake fittings. Tighten unused intake port and return plug.
	Partially clogged nozzle strainer.	Clean strainer or change nozzle.
	Leak at nozzle adaptor.	Change nozzle and adaptor.

COMMERCIAL WATER HEATER LIMITED WARRANTY

EFFECTIVE

For 3 Years, in the event of a tank leak, we will repair or, at our discretion, replace the defective water heater.

For 1 Year, in the event of part failure, we will repair or, at our discretion, replace the defective part.

We warrant this product against defects in materials or workmanship as described in this document if installed within the United States or Canada and provided the product remains at its original place of installation.

Warranty coverage begins the date of installation OR the date of manufacture if installation cannot be verified.

WHAT'S COVERED

Subject to these terms, in the event of defect in materials and/or workmanship resulting in a **tank leak** during the **first three years**, we will:

- Replace the water heater should the tank leak.

Subject to these terms, in the event of a defect in materials and/or workmanship appearing during the **first year**, we will:

- Repair or, at our discretion, replace any part of the water heater covered under this limited warranty excluding parts subject to normal maintenance (Example: non-electronic anode rod, filter, etc)

Service/labor, shipping, delivery, installation, handling or any other costs are not covered at any time under this warranty.

Any replacement part or product will be warranted only for the unexpired portion of the original water heater's limited warranty period.

If an identical model is no longer available due to a change in law, regulation, or standard, we will replace the product with one having comparable capacity and input. In these instances, the owner will have the option of paying the difference between what was paid for the original model and the new model with the additional features, or receiving a refund of the portion of the purchase price, on a pro-rata basis allocable to the unexpired portion of the warranty.

WHAT'S NOT COVERED

- Problems caused by improper: gas supply line sizing, gas type, venting, connections, combustion air, voltage, wiring, or fusing
- Failure to follow applicable codes
- Failure to follow printed instructions
- Abuse, misuse, accident, fire, flood, Acts of God
- Improper installation, sizing, delivery, or maintenance
- Claims related to rust, noise, smell, or taste of water
- Failure to conduct authorized factory start up if required
- Alterations to the water heater
- Non-outdoor heaters installed outdoors
- Damages due to a failure to allow for thermal expansion
- Heat exchanger failure due to lack of adequate / proper supply of water
- Heaters moved from their original location
- Service trips to explain proper installation, use, or maintenance of the product/unit or to describe compliance requirements under applicable codes and regulations
- Charges related to accessing your heater including but not limited to door/wall removal, equipment rental, etc.
- Replacement parts after expiration of this warranty

LIMITATIONS

NOTWITHSTANDING ANYTHING ELSE TO THE CONTRARY, THIS IS YOUR SOLE AND EXCLUSIVE WARRANTY. ALL OTHER WARRANTIES INCLUDING A WARRANTY OF MERCHANTABILITY OR FITNESS FOR PARTICULAR PURPOSE ARE EXPRESSLY DISCLAIMED. SELLER SHALL NOT BE LIABLE FOR ANY CONSEQUENTIAL, INCIDENTAL, SPECIAL, PUNITIVE OR OTHER INDIRECT DAMAGES. TOTAL LIABILITY ARISING AT ANY TIME SHALL NOT EXCEED THE PURCHASE PRICE PAID WHETHER BASED ON CONTRACT, TORT, STRICT LIABILITY OR ANY OTHER LEGAL THEORY.

SERVICE INQUIRIES:

For service inquiries call the telephone number listed below. Be prepared to provide the following information: name, address, and telephone number; the model and serial number of the water heater; proof of installation; and a clear description of the problem.

For your records, fill in the product:

Serial: _____
Model: _____

U.S. Customers:

A. O. Smith Corporation
500 Tennessee Waltz Parkway
Ashland City, Tennessee 37015
800-527-1953
www.hotwater.com

Canadian Customers:

P. O. Box 310 – 768 Erie Street
Stratford (Ontario) N5A 6T3
800-265-8520

A.O. Smith

OIL

COMMERCIAL WATER HEATER PARTS LIST

MODEL COF - 199, 245, 315, 385, 455 & 700
AND COF - 315A, 385A, 455A & 700A
SERIES 940/941

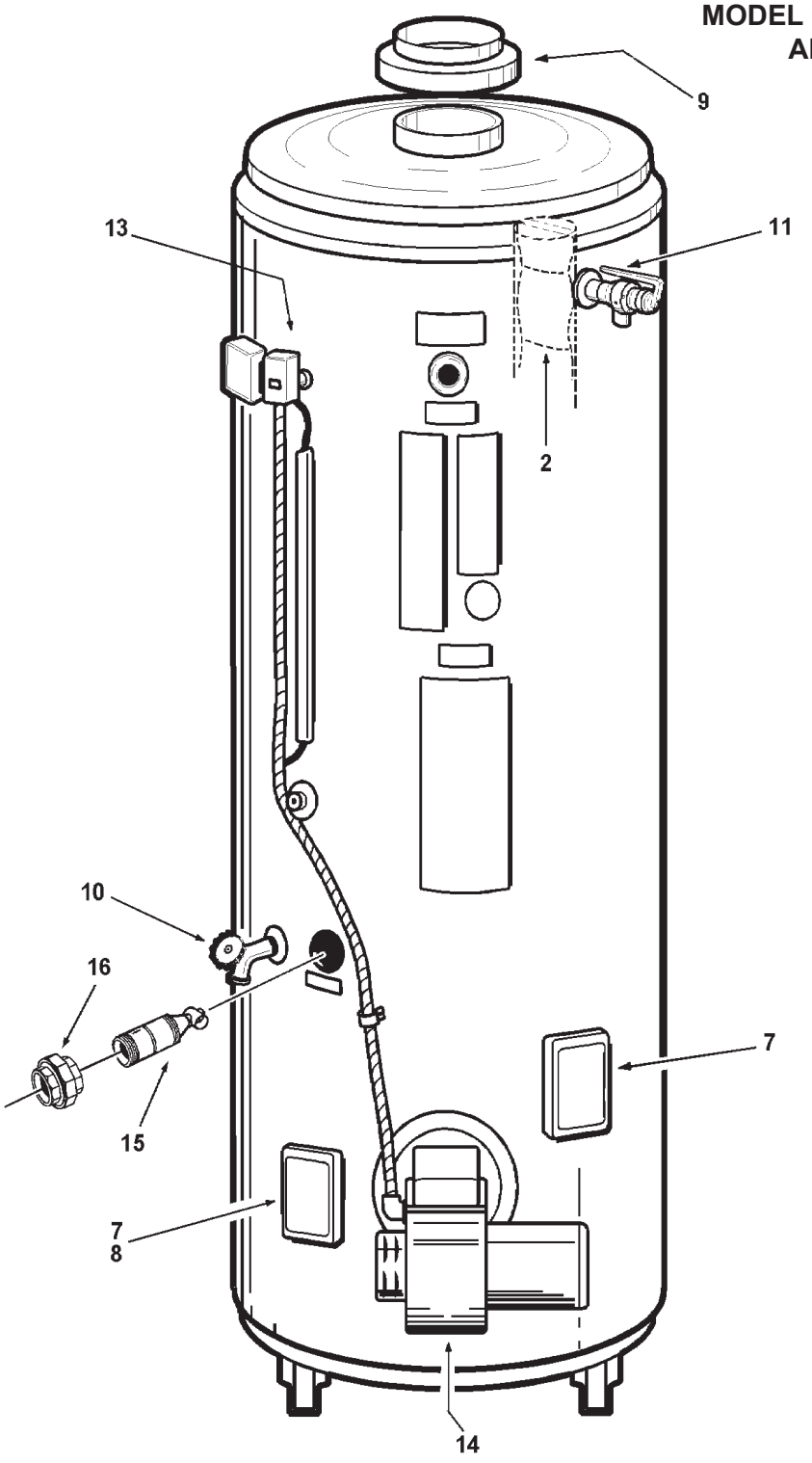

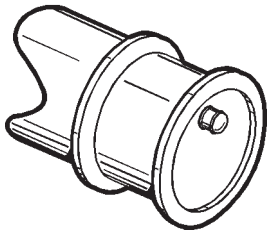

ITEM NO. 6

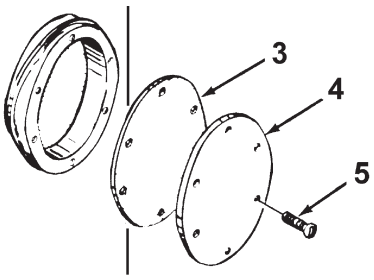

CLEANOUT ASSEMBLY

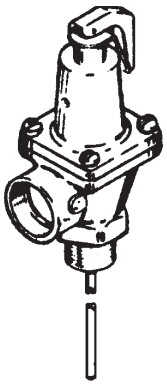

ITEM NO. 11

A.O. SMITH
500 Tennessee Waltz Parkway
Ashland City, TN 37015
1-800-433-2545
www.hotwater.com

ITEM	DESCRIPTION	COF 199	COF 245	COF 315	COF 385(A)	COF 455(A)	COF 700(A)
1	*Anode,	9003892005(2)	9003892005(2)	9003892005(2)	9003892005(3)	9003892005(3)	9003892005(4)
2	Baffle, Flue	9005341205(6)	9005341205(6)	9005341205(7)	191996-1(12)	9005341205(12)	9005341205(16)
	CLEANOUT ASSEMBLY						
3	Gasket	9004099215	9004099215	9004099215	9004099215	9004099215	9004099215
4	Pressure Plate	9005797205	9005797205	9005797205	9005797205	9005797205	9005797205
5	Screw-self Tapping	9004100215	9004100215	9004100215	9004100215	9004100215	9004100215
6	Barometric Draft Control	9500007099	9500007100	9500007100	9500007100	9500007100	9500007101
7	Cover, Cleanout Opening &						
	Observation Port.	181260	181260	181260	181260	181260	181260
8	Plug, Observation	41377-1	41377-1	41377-1	41377-1	41377-1	41377-1
9	Reducer, Flue	99767-2	----------	----------	----------	----------	76707-1
10	Valve, Drain	9003906015	9003906015	9003906015	9003906015	9003906015	9003906015
11	Valve, Relief	9005899205	9005903205	9005903205	9005903205	9005903205	9006187205
12	*Instruction Manual	193472-2	193472-2	193472-2	193472-2	193472-2	193472-2
13	Thermostat with E.C.O	9006543005	9006543005	9006543005	9006543005	9006543005	9006543005
14	Oil Burner						
	Single Stage	9500007239	9500007241	9500007243	9500007248	9500007250	9500007252
	Two Stage	9500007240	9500007242	9500007244	9500007249	9500007251	9500007253
15	Hydro-Cannon	9006052205	9006052205	9006052205	9006052205	9006052205	9006052205
16	1 1/2" Pipe Union	9006053205	9006053205	9006053205	9006053205	9006053205	9006053205

* Not Illustrated
Quantities shown in parenthesis next to part number.
Request parts from Product Service Division giving all information such as model and series number.

NOTES



500 Tennessee Waltz Parkway
Ashland City, TN 37015
www.hotwater.com

11

Mécanique Nordique
Plumbing
Heating
Ventillation
mecanique.nordique@hotmail.com
1255 Rue J.A.Bombardier Lévis QC G7A 2P4
Tél : (418) 496-1109 Fax : (418) 496-3803

REVIEWED BY CONTRACTOR
Kudlik Construction Ltd.
NAME: Sandra Rousseau P.Eng
DATE: Jun 15, 2018

IQUALUIT WWTP UPGRADES

DRAWING FOR APPROVAL

ENGINEER: **NUNAMI STANTEC LIMITED**

DRAWING #: AD-011 REV # 1

Section	: 23 21 14
Article	: 2,6
Plans	: M-802 HEAT EXCHANGER SHEDULE
Application	: BRAZED PLATE HEAT EXCHANGER
Brand	: HTG , DANFOSS
Model	: B3-052-70-H & HTG032DW-30-3.0
Revised #	: # 1
Supplyer	: SPECIFIED THECHNICAL SALES LTD
Date	: **15/06/2018**
By	: Martin Boucher

STANTEC PROJECT #: 110126045

This review by Stantec is for general conformance with the design concept of Stantec's design of the:

- ☐ Architectural
- ☐ Structural
- ☑ Mechanical
- ☐ Electrical
- ☐ Other

component(s) only and does not mean that Stantec has verified or approves the shop drawing(s). The Contractor remains solely responsible for the shop drawing(s) and this review by Stantec does not relieve the Contractor of the Contractor's responsibility for errors or omissions in the shop drawing(s) or for meeting all requirements of the contract documents. This review does not mean that Stantec approves the detailed design inherent in the shop drawing, responsibility for which shall remain with the Contractor submitting same, nor does this review mean that Stantec accepts any deviation of the shop drawing(s) from the contract documents. The Contractor is responsible for confirming all dimensions and correlating them at the job site, for all construction means, methods and techniques, and for coordination of construction work of all trades, including coordination of all shop drawings.

SUBMITTAL # AD-011 Rev#1

Stantec

- ☑ REVIEWED
- ☐ REVIEWED, AS NOTED
- ☐ REVISE AND RESUBMIT
- ☐ NOT REVIEWED

DATE 2018-06-27

BY Brendan Zrum, P.Eng

TAG: HEX-3.1
HYDRONIC SPECIALTIES
SPEC 23 21 14 2.6

Universal RC - Single phase

Brazed Plate Heat Exchanger: B3-052-70-H

Customer: VIGMARK
Reference: 51.6 kW

Date: 05-07-2018
Danfoss ref:

Design conditions

Flow type			Counter current	
			side 1	**side 2**
Inlet temperature	C	:	82.20	55.00
Outlet temperature	C	:	65.60	80.00
Mass Flow rate	kg/s	:	0.874	0.493
Volumetric Flow rate	L/min	:	51.181	29.971
Max pressure drop	kPa	:	/	/

Properties of fluid

Fluid		:	Propylene glycol(50%)	Water
Reference temperature	C	:	73.90	67.50
Viscosity	mPa-s	:	0.9958	0.42
Viscosity wall	mPa-s	:	1.0613	0.405
Density	kg/m^3	:	1030.88	980.05
Heat capacity	kJ/kg-K	:	3.556	4.187
Thermal conductivity	W/m-K	:	0.420	0.657

Brazed Plate Heat Exchanger

Heat load		kW	:	51.60	
total area		m^2	:	3.47	
LMTD		K	:	5.34	
H.T.C.		W/m^2-K	:	3069/2785	
Pressure drop	- Total	kPa	:	8.04	2.53
	- Channel	kPa	:	7.61	2.38
	- In port	kPa	:	0.43	0.15
Port hole diameter		mm	:	35	35
NTU			:	3.107	4.682
Channel number			:	34H	35H
Number of plates			:	70	
Surface margin		%	:	10.2	
Fouling factor		m^2-K/kW	:	0.0332	

TAG: HEX-3.1

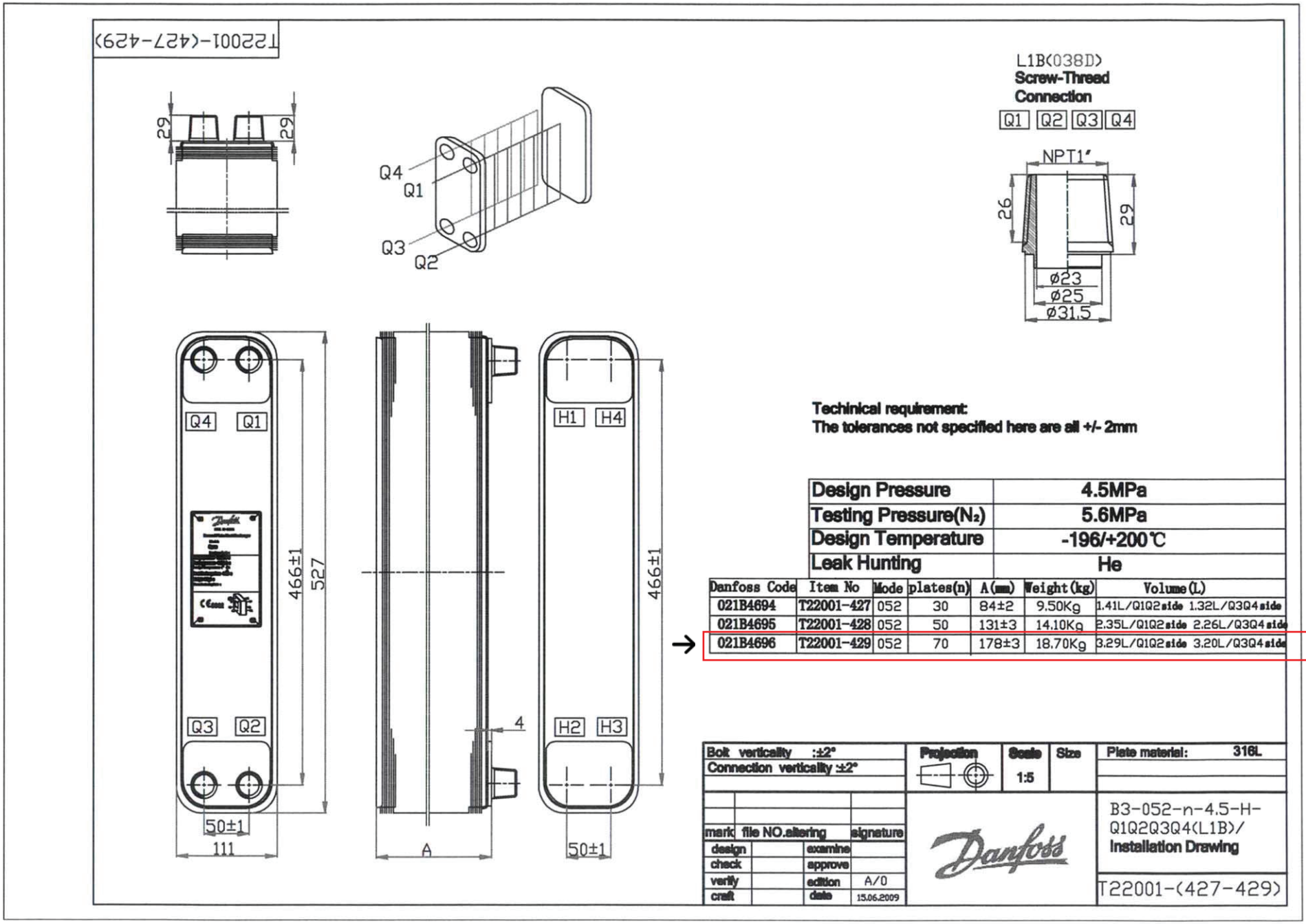

Techinical requirement:
The tolerances not specified here are all +/- 2mm

Design Pressure	4.5MPa
Testing Pressure(N_2)	5.6MPa
Design Temperature	-196/+200℃
Leak Hunting	He

Danfoss Code	Item No	Mode	plates(n)	A(mm)	Weight(kg)	Volume(L)
021B4694	T22001-427	052	30	84±2	9.50Kg	1.41L/Q1Q2side 1.32L/Q3Q4side
021B4695	T22001-428	052	50	131±3	14.10Kg	2.35L/Q1Q2side 2.26L/Q3Q4side
021B4696	T22001-429	052	70	178±3	18.70Kg	3.29L/Q1Q2side 3.20L/Q3Q4side

Bolt verticality :±2°				Projection	Scale	Size
Connection verticality ±2°					1:5	
mark	file NO.	altering	signature			
design		examine				
check		approve				
verify		edition	A/0			
craft		date	15.06.2009			

Plate material: 316L

B3-052-n-4.5-H-Q1Q2Q3Q4(L1B)/
Installation Drawing

T22001-(427-429)

HYDRONIC SPECIATIES
SPEC 23 21 14 2.6

DRAWING REVISION

HTG
Heat Transfer Group, Inc.

TAG: HEX-3.2

Brazed Plate Heat Exchanger: HTG095DW-30

Customer: VIGMARK
Reference: 43.5 kW

Date: 05-07-2018
HTG ref:

Design Conditions

Flow type				Counter current	
			side 1		**side 2**
Inlet temperature	C	:	82.20		2.80
Outlet temperature	C	:	65.60		9.40
Volumetric Flow rate	l/s	:	0.72		1.57
Max pressure drop	kPa	:	/		/

Fluid Properties

Fluid		:	50% P.G	Water
Reference temperature	C	:	73.90	6.10
Viscosity	cP	:	0.9958	1.4701
Viscosity wall	cP	:	2.6801	0.8858
Density	kg/m^3	:	1030.88	1000.52
Heat capacity	kJ/kg-K	:	3.556	4.197
Thermal conductivity	W/m-K	:	0.420	0.568

Heat Exchanger

Heat load		kW	:	43.50	
total area		m^2	:	2.66	
LMTD		K	:	67.68	
H.T.C.		W/m^2-K	:	2113/242	
Pressure drop	- Total	kPa	:	4.79	19.07
	- Channel	kPa	:	4.74	18.81
	- In port	kPa	:	0.05	0.26
Port hole diameter		mm	:	54	54
NTU			:	0.245	0.098
Channel number			:	14H	15H
Number of plates			:	30	
Surface margin		%	:	773	
Fouling factor		m^2-K/kW	:	3.659	

***Note DW = double wall plates ***

Interstitial Vent to see leak (standard)
Fluid cannot be mixed

TAG: HEX-3.2

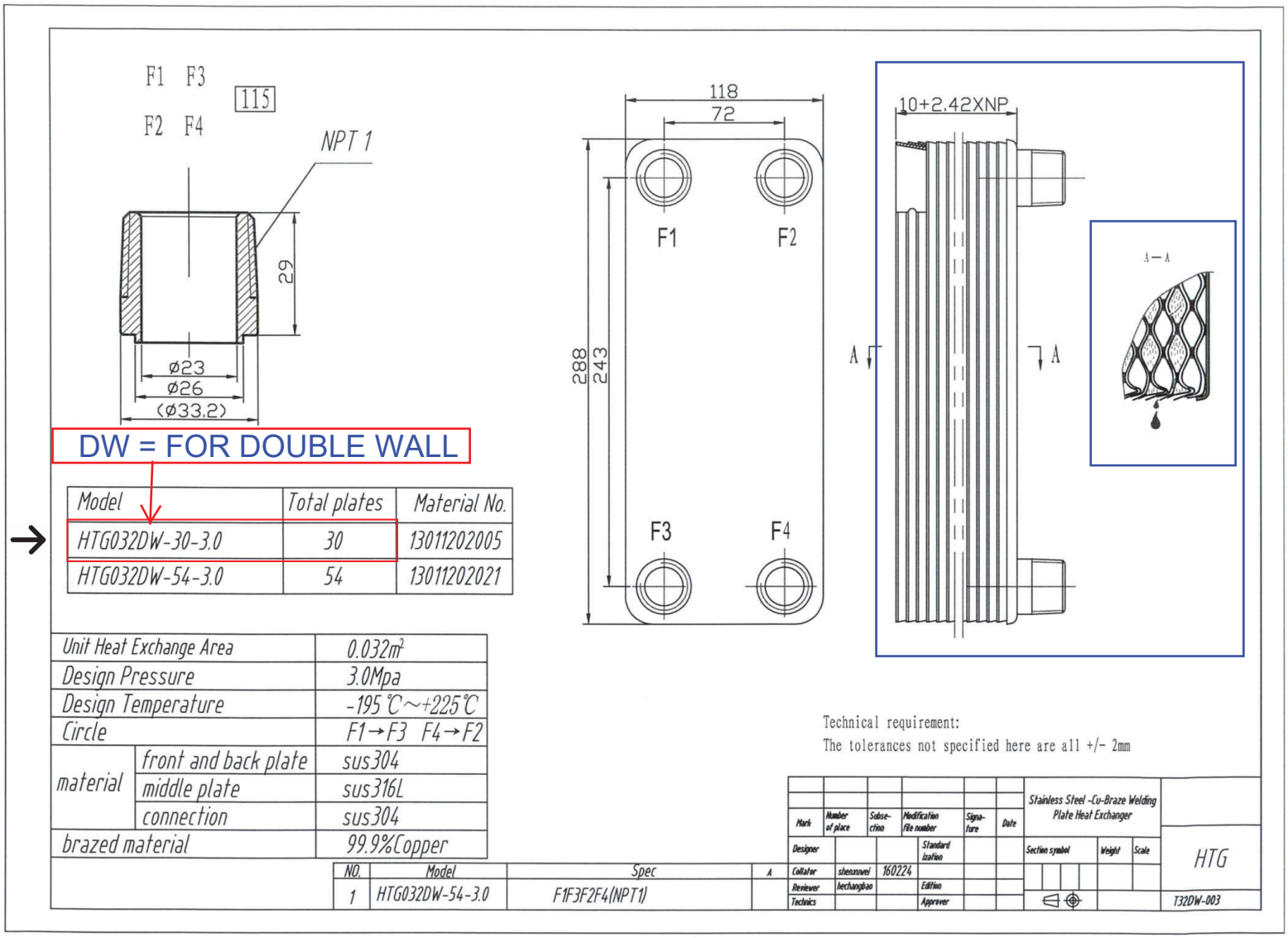

Model	Total plates	Material No.
HTG032DW-30-3.0	30	13011202005
HTG032DW-54-3.0	54	13011202021

Unit Heat Exchange Area		0.032m²
Design Pressure		3.0Mpa
Design Temperature		-195℃~+225℃
Circle		F1→F3 F4→F2
material	front and back plate	sus304
	middle plate	sus316L
	connection	sus304
brazed material		99.9%Copper

NO.	Model	Spec
1	HTG032DW-54-3.0	F1F3F2F4(NPT1)

12

Mécanique Nordique
Plumbing Heating Ventillation
mecanique.nordique@hotmail.com
1255 Rue J.A.Bombardier Lévis QC G7A 2P4
Tél : (418) 496-1109 Fax : (418) 496-3803

REVIEWED BY CONTRACTOR
Kudlik Construction Ltd.
NAME: Sandra Rousseau P.Eng
DATE: Jun 04, 2018

IQUALUIT WWTP UPGRADES

DRAWING FOR APPROVAL

ENGINEER: **NUNAMI STANTEC LIMITED**

DRAWING #: AD-012

Section	: 23 21 14
Article	: 2.1
Plans	: M802 TANK SCHEDULE (HEATING & PLUMBING)
Application	: DIAPHRAGM TYPE EXPANSION TANK
Brand	: AMTROL , EXTROL , THERM-X-TROL ,
Model	: 130-LBC , EX-1500-100 , ST-42V ,
Revised #	:
Supplyer	: WOLSELEY
Date	: **01/06/2018**
By	: Martin Boucher

STANTEC PROJECT #: 110126045
SUBMITTAL # AD-012

This review by Stantec is for general conformance with the design concept of Stantec's design of the:
☐ Architectural ☐ Electrical
☐ Structural ☐ Other
☑ Mechanical

Stantec

component(s) only and does not mean that Stantec has verified or approves the shop drawing(s). The Contractor remains solely responsible for the shop drawing(s) and this review by Stantec does not relieve the Contractor of the Contractor's responsibility for errors or omissions in the shop drawing(s) or for meeting all requirements of the contract documents. This review does not mean that Stantec approves the detailed design inherent in the shop drawing, responsibility for which shall remain with the Contractor submitting same, nor does this review mean that Stantec accepts any deviation of the shop drawing(s) from the contract documents. The Contractor is responsible for confirming all dimensions and correlating them at the job site, for all construction means, methods and techniques, and for coordination of construction work of all trades, including coordination of all shop drawings.

☐ REVIEWED
☑ REVIEWED, AS NOTED
☐ REVISE AND RESUBMIT
☐ NOT REVIEWED

DATE 2018-06-05
BY Brendan Zrum, P.Eng

TAG: TK-1.1 & TK-1.2

EXTROL®

Hydronic Expansion Tanks: LBC Series ASME

SPEC 23 21 14 2.1

125 PSIG Working Pressure

Construction

Shell	ASME Approved Steel
Bladder Design	Partial Acceptance; Replaceable
Bladder Thickness (models 35-100)	.087 In Minimum
Bladder Thickness (models 130-600)	.100 In Minimum
System Connection	NPTF Malleable Iron
Finish	Red Oxide Primer
Air Valve	Schrader Valve w/EPDM Seats
Factory Precharge	12 PSIG (.8 bar)

Application

- For use in closed, non-potable hydronic heating and chilled water systems.
- Replaceable, partial acceptance bladder design.
- Meets all ASME Code Section VIII, Division 1 standards.
- Available with optional sight glass and seismic restraints.

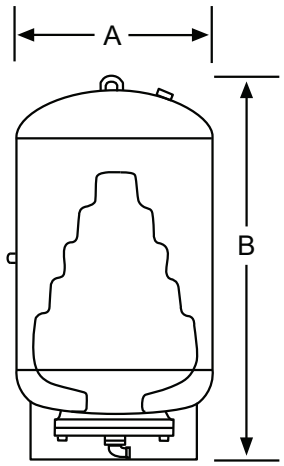

Performance

Maximum Operating Temperature	240°F (115°C)
Maximum Working Pressure	125 PSIG (8.6 bar)
Warranty	1 Year

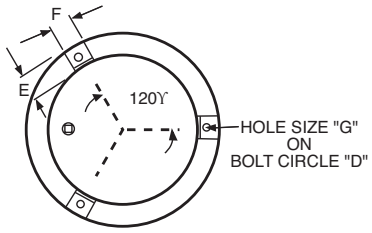

BOTTOM VIEW

ASME Models

Model Number	Tank Volume		Max. Accept. Factor	A Tank Diameter		B Tank Height		System Conn. (NPTF)	Shipping Weight	
	Gal	Lit		In	mm	Inch	mm	In	Lbs	Kg
35LBC	10	35	1.00	10	254	37	940	1	67	30
50LBC	13	50	.85	12	305	37	940	1	76	34
85LBC	22	85	.50	16	406	35	889	1	92	42
100LBC	26	100	.42	16	406	39	991	1	99	45
130LBC	34	130	.79	20	508	35	889	1	135	61
165LBC	44	165	.61	20	508	40	1016	1	149	68
200LBC	53	200	.51	24	610	41	1041	1	195	88
300LBC	80	300	.34	24	610	56	1422	1	233	106
400LBC	106	400	.50	24	610	69	1753	1	274	124
500LBC	132	500	.40	24	610	83	2108	1	310	141
600LBC	158	600	.34	30	762	67	1702	1	438	199

All dimensions and weights are approximate.

Optional Seismic Restraints

Tank Diameter	Bolt Circle	Dim.	Dim.	Hole Size
B	D	E	F	G
10	12⅝	2	2	9/16
12	14¾	2	2	9/16
16	16¾	2	2	9/16
20	16¾	2	2	9/16
24	18	2	2	9/16
30	24	4	4	⅞

Job Name _____ Notes _____

Engineer _____

Contractor _____

P.O. No. _____

Sales Rep. _____

Model No. _____

MADE IN USA

Amtrol Inc., 1400 Division Road, West Warwick, RI 02893 USA T: 401.884.6300 **www.amtrol.com**

MC 4400 (01/15)

TAG : TK-1.4

Models and Specifications



Extrol® In-Line Models

- Suitable for expansion control in most residential closed-loop boiler systems.
- Patent-pending InSight™ indicator cap provides visual check of tank condition.
- In-line mounting adds convenience and space savings.

EX Series Specifications

Model Number	Tank Volume (Gallons)	Max. Accept. Volume (Gallons)	Diameter (Inches)	Height (Inches)	System Connection (NPTM)	Shipping Weight (lbs.)
EX-15	2.0	1.0	8	13	½	5
EX-30	4.4	2.5	11	15	½	9
EX-60	7.4	2.5	11	23	½	14
EX-90	14.0	11.3	15	21	½	23

Maximum operating temperature: 240° F. Maximum working pressure: 100 PSIG. Factory precharge: 12 PSIG.

SPEC 22 21 14 2.1



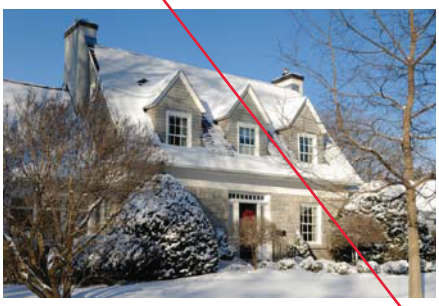

- Combination Packages include Air Purger and Automatic Float Vent.

EX Combination Packages

Model Number	EXTROL Model	Air Purger Model	Air Vent Model	Purger Connection (NPTF)	Shipping Weight (lbs.)
EX-1500-100	EX-15	443	700-C	1	10
EX-1500-125	EX-15	444	700-C	1¼	10
EX-3000-100	EX-30	443	700-C	1	14
EX-3000-125	EX-30	444	700-C	1¼	14

Maximum operating temperature: 240° F. Maximum working pressure: 100 PSIG. Factory precharge: 12 PSIG

TK-1.4 is not required
Deleted by addendum



Extrol Vertical Models

- For use in large residential and light commercial applications.
- Floor-standing with rugged steel base.
- Additional capacity to handle larger boiler systems.

SX Series Specifications

Model Number	Tank Volume (Gallons)	Max. Accept. Volume (Gallons)	Diameter (Inches)	Height (Inches)	System Connection (NPTF)	Shipping Weight (lbs.)
SX-30V	14	11.3	15	24	1	25
SX-40V	20	11.3	15	32	1	33
SX-60V	32	11.3	15	48	1	43
SX-90V	44	34.0	22	36	1¼	69
SX-110V	62	34.0	22	47	1¼	92
SX-130V	81	34.0	22	56	1¼	103
SX-160V	86	46.0	26	47	1¼	123

Maximum operating temperature: 240° F. Maximum working pressure: 100 PSIG. Factory precharge: 12 PSIG.

TOP VIEW

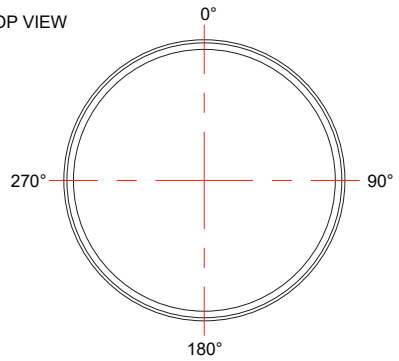

NOTES:

1. TANK IS MANUFACTURED TO ASTM-D-1998 STANDARD.
2. ALL DIMENSIONS ARE APPROXIMATE.

TAG: TK-1.5

SPEC ON DRAWING M802 TANK SCHEDULE

LID TOP VIEW

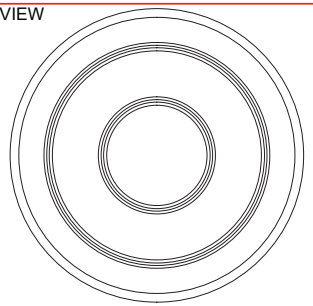

MATERIALS LIST		
ITEMS	DESCRIPTION	NOTES
A	OT-25 OPEN TOP TANK	
B	LID FOR OT-25	

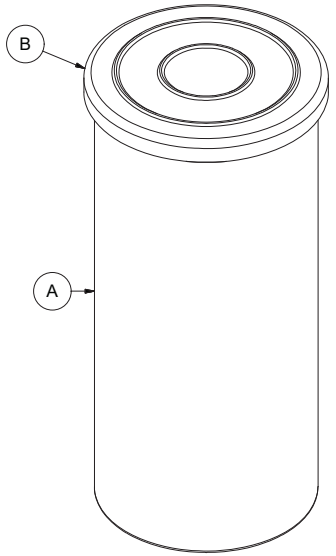

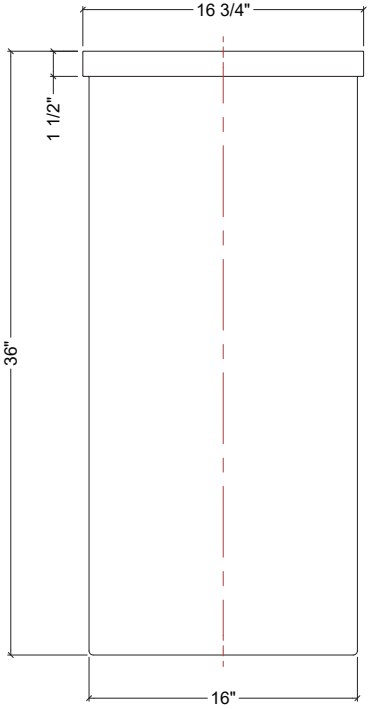

FRONT VIEW

TK-1.5 max temperature rating is to be at least 104.4°C

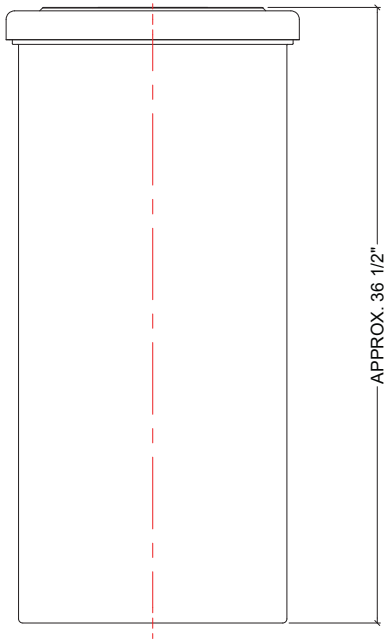

SIDE VIEW WITH LID

REV	DATE	DESCRIPTION	BY	APPD	REVD

REVISIONS

CUSTOMER

TITLE: 25 IG OPEN TOP TANK

ACO JOB NO:

PURCHASE ORDER NO:

PURCHASER'S EQUIP. NO:

THIS DRAWING IS THE PROPERTY OF ROTOPLAST INC. AND SHALL NOT BE COPIED OR TRANSFERRED WITHOUT THE WRITTEN CONSENT OF ROTOPLAST INC.

ENGINEERS SEAL

ACO CONTAINER SYSTEMS
DIVISION OF ROTOPLAST INC.
PICKERING - ONTARIO - CANADA
ACO CONTAINER SYSTEMS
DIVISION OF ROTOPLAST INC.
794 MCKAY RD.
PICKERING, ONTARIO, CANADA
TEL. 905-683-8222
FAX 905-683-2969

DESIGNED	
DRAWN	WM
CHECKED	
APPROVED	
SCALE	N.T.S.
DATE	03-03-16

DWG No: OT-25-L

REV: 0

Non-ASME THERM-X-TROL®

General Usage

TAG: TK-3.1 SPEC M802 TANK SCHEDULE

- Residential Water Heaters
- Office Buildings
- Apartment Buildings
- Dormitories
- Elderly Housing
- Extended Care Facilities
- Condominiums/Multiple Residential
- Food Service
- Laundromats
- Hospitals
- Other General-Use Hot Water Systems

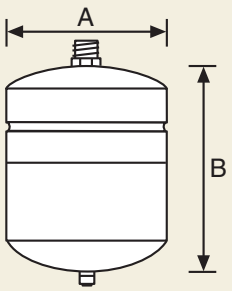

ST-5, ST-8, ST-12

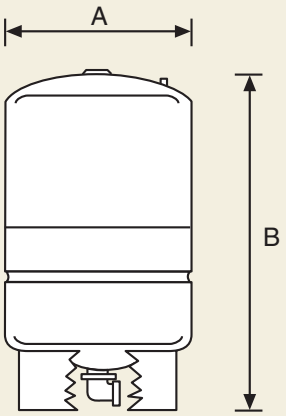

ST-25V through ST-210V

THERM-X-TROL Non-ASME Specifications

Model No.	Total Volume (Gals.)	Max. Acceptance Factor	Diameter (A)	Height (B)	System Connection	Ship Weight (lbs.)
ST-5	2.0	.45	8″	12 5/8″	3/4″ NPT	5
ST-8	3.2	.59	9″	15″	3/4″ NPT	7
ST-12	4.4	.73	11″	15″	3/4″ NPT	9
ST-25V	10.3	1.0	15 3/8″	19 1/4″	3/4″ NPT	23
ST-30V	14.0	.81	15 3/8″	23 7/8″	3/4″ NPT	25
ST-42V	20.0	.57	15 3/8″	31 5/8″	3/4″ NPT	33
ST-60V	34.0	1.00	22″	29 5/8″	1 1/4″ NPT	61
ST-80V	44.0	.77	22″	36″	1 1/4″ NPT	69
ST-180V	62.0	.55	22″	46 3/4″	1 1/4″ NPT	92
ST-200V	81.0	.41	22″	56 3/8″	1 1/4″ NPT	103
ST-210V	86.0	.54	26″	47 1/4″	1 1/4″ NPT	123
ST-451	158.0	.65	73 1/4″	30″	2″ NPT	508
ST-452	211.0	.65	91″	30″	2″ NPT	760
ST-453	264.0	.65	85 5/8″	36″	3″ NPT	810
ST-454	317.0	.65	98″	36″	3″ NPT	914
ST-455	370.0	.65	110 3/8″	36″	3″ NPT	1,018
ST-456	422.0	.65	81 7/8″	48″	3″ NPT	1,655
ST-457	528.0	.65	97 1/4″	48″	3″ NPT	1,925

Maximum Working Pressure: 150 PSI. All Models listed by NSF/ANSI 61® (excluding ST-451 – ST-457);
Maximum Allowable Working Temperature: ST-5 through ST-210V: 200°F; ST-451 through ST-457: 240°F;
Standard Factory Precharge: 40 PSIG (ST-5 – ST-210V); 55 PSIG (ST-451 – ST-457)

EXTROL® LBC SERIES

PRESSURIZED EXPANSION TANKS (ASME)

INSTALLATION & OPERATION INSTRUCTIONS

AMTROL®

Models 35-LBC through 600-LBC



NOTE: Inspect for shipping damage and notify freight carrier or store where purchased immediately if damage is present. To avoid risk of personal injury and property damage, if the product appears to be malfunctioning or shows signs of corrosion, call a qualified professional immediately. Current copies of the Product manual can be viewed at www.amtrol.com. Use proper safety equipment when installing.

THIS IS THE SAFETY ALERT SYMBOL. IT IS USED TO ALERT YOU TO POTENTIAL PERSONAL INJURY AND OTHER HAZARDS. OBEY ALL SAFETY MESSAGES THAT FOLLOW THIS SYMBOL TO REDUCE THE RISK OF PERSONAL INJURY AS WELL AS PROPERTY DAMAGE.

⚠WARNING **READ CAREFULLY THE PRODUCT INSTALLATION & OPERATION INSTRUCTIONS. FAILURE TO FOLLOW THE INSTRUCTIONS AND WARNINGS IN THE MANUAL MAY RESULT IN SERIOUS OR FATAL INJURY AND/OR PROPERTY DAMAGE, AND WILL VOID THE PRODUCT WARRANTY. THIS PRODUCT MUST BE INSTALLED BY A QUALIFIED PROFESSIONAL. FOLLOW ALL APPLICABLE LOCAL AND STATE CODES AND REGULATIONS, IN THE ABSENCE OF SUCH CODES, FOLLOW THE CURRENT EDITIONS OF THE NATIONAL PLUMBING CODE AND NATIONAL ELECTRIC CODE, AS APPLICABLE.**

⚠WARNING **EXPLOSION OR RUPTURE HAZARD. THE EXPANSION TANK MUST BE OPERATED SO THAT THE PRESSURE DOES NOT EXCEED THE MAXIMUM WORKING PRESSURE.**

CALIFORNIA PROPOSITION 65 WARNING! This product contains a chemical known by the State of California to cause cancer and to cause birth defects or other reproductive harm. (California Installer/Contractor - California law requires that this notice be given to consumer/end user of this product.) **For more information: www.amtrol.com/prop65.html**

⚠WARNING **EXPLOSION OR RUPTURE HAZARD** A relief valve must be installed to prevent pressure in excess of local code requirement or maximum working pressure designated in the Product Manual, whichever is less. Do not expose Product to freezing temperatures or temperatures in excess of 240° F. Do not adjust the pre-charge or re-pressure this Product except for any adjustments required at the time of initial installation, especially if Product corroded, damaged or with diminished integrity. Adjustments to pre-charge must be done at ambient temperature only. Failure to properly size the Product or follow these instructions may result in excessive strain on the system lead to Product failure, serious or fatal personal injury, leakage and/or property damage.

⚠WARNING **Potable Water and Radiant Heating Warning.** This Product must not be used in radiant heating, potable water or open systems of any kind. These systems contain oxygenated water which will cause internal corrosion and premature Product failure. Use a Therm-X-Trol® for potable water systems and a Radiant Extrol™ for radiant heating systems. Mount vertically only. Do not install on dead-end pipe.

PLEASE READ THE FOLLOWING INSTRUCTIONS CAREFULLY
IMPORTANT GENERAL SAFETY INFORMATION -
ADDITIONAL SPECIFIC SAFETY ALERTS APPEAR IN THE FOLLOWING INSTRUCTIONS.

⚠WARNING **EXPLOSION HAZARD.** Failure to follow instructions in the accompanying product manual can cause rupture or explosion, possibly causing serious or fatal injury, leaking or flooding and/or property damage.

⚠WARNING **FAILURE TO PROPERLY SEAL VALVE CAP WILL RESULT IN LOSS OF PRECHARGE CAUSING PRODUCT TO FAIL.**

Location of EXTROL® Expansion Tanks

⚠WARNING This Product, like most Products under pressure, may over time corrode, weaken and burst or explode, causing serious or fatal injury, leaking or flooding and/or property damage. To minimize risk, a licensed professional must install and periodically inspect and service the Product. A drip pan connected to an adequate drain must be installed if leaking or flooding could cause property damage. Do not locate in an area where leaking could cause property damage to the area adjacent to the appliance or to lower floors of the structure.

The AMTROL expansion tank may be placed in any convenient position within the mechanical room (or building). If multiple tanks are installed, they should all be on the same level.

Point of Connection

Unlike a conventional tank, the EXTROL sealed air cushion does not require replenishment so DO NOT connect to an air separator or other air collection device.

As with any expansion tank, it is recommended that the EXTROL be connected to the suction side of the pump. This will prevent the pump head from becoming subtractive which may result in entry of air and vapor formation at high points in the system.

By connecting the EXTROL on the boiler return, displacement of coolest system water into tank is ensured reducing energy waste.

Low pressure drop components such as air separators and boilers may be placed between point of connection and pump suction if desired. System design will dictate the feasibility of this.

Natural convection losses and the entry of air into tanks are eliminated by connection to the side or underside of main pipe. The piping should be pitched up and away from the EXTROL to eliminate any potential air traps.

Installation

⚠WARNING **THIS PRODUCT MUST BE INSTALLED BY A QUALIFIED PROFESSIONAL.**

1. Note location of system connection, air charge valve and drain connection on tank.
2. Remove the plug or pipe cap from the system connection.
3. Remove the 1 1/2” NPT plug covering the air charge valve.
4. Before making any connection to the tank, check the tank and air charge (use an accurate pressure gauge). The air pressure must be equal to the minimum system pressure at the tank location.

> **IMPORTANT:** If increasing pre-charge pressure above 55 psig the following steps must be followed:
>
> a. Tank must be connected to the system with the isolation valve open.
> b. System must be pressurized to 13-14 psig, slightly above factory setting.
> c. Isolation valve needs to be shut.
> d. Pre-charge pressure of tank can now be increased to match system fill pressure.
> e. Open isolation valve and start up system.
> **Failure to follow these steps could result in damage to the bladder and void all warranties.**

5. After making sure the air charge is correct, replace the valve cap and the 1 1/2” plug over the air valve.
6. The EXTROL may now be piped to the system (use the suggested EXTROL piping diagrams on the next page).
7. Using the table below, select appropriate pipe size. Connection to each EXTROL must have a lock shield gate valve and union to allow isolation and removal if required. Make up and fill valves, whether manual or automatic, should be tied into the connecting line. This will ensure that pump operation will not affect valve operation.

Operational Limits

Maximum Operating Pressure: As stamped on nameplate

Maximum Operating Temperature: 240 °F

Minimum Operating Temperature: 35°F (non-glycol application)

If unit is being installed in a glycol system where minimum temperatures fall below 35°F, contact the AMTROL technical service department at (401) 535-1216.

Operating Instructions

1. Check the expansion tank pre-charge before the system is filled with water. The charge is 12 psig unless noted otherwise on the tank label. Check to make sure this is the correct pre-charge pressure specified for the system.
2. If the tank pre-charge pressure needs to be changed on a dry system follow the following procedure:
   a. Check the expansion tank air pressures at the pre-charge connection with an accurate tire type pressure gauge. The pre-charge connection is the same kind of connection found on automobile tires.
   b. If the pressure is low, charge the tank with nitrogen gas or with oil free compressed air. Check the pressure frequently during this process as you would when filling a tire with air.

> **DANGER**: Excessive pressure can cause tank to explode. Exercise care when filling a tank with air so the pressure does not exceed that required or does not exceed the working pressure of the tank as stamped on the nameplate. Failure to follow these instructions will result in serious personal injury or death and property damage.

3. If, after the system has been filled with water and operating, it is found that the expansion tank pre-charge must be changed use the following procedure:
   a. Turn off the heat source and allow the system water to cool to ambient temperature.

> **IMPORTANT**: Expansion tank cannot be properly air charged other than at ambient temperature.

   b. Close the lock-shield valve in the tank-to-system piping.
   c. Open the drain valve to empty the water from the tank.
   d. Check the tank air pressure at the pre-charge connection with an accurate tire type air gauge.
   e. Refer to 2b above.
   f. Close the drain valve, open the lock-shield valve and turn on the heat source.
   g. Relock the lock-shield valve.

Firing Rate of Boiler	Length of Pipe Connecting Tank to System:		
MBTU/H	Below 11'	11' – 30'	31' – 100'
2,000	1/2"	3/4"	1"
4,000	3/4"	1"	1 1/4"
8,000	1"	1 1/4"	1 1/2"
12,000	1 1/4"	1 1/2"	2"
16,000	1 1/4"	2"	2 1/2"
20,000	1 1/2"	2"	2 1/2"

Warranty

LBC Series Models: One (1) Year Limited Warranty

Visit www.amtrol.com for complete warranty details.

AMTROL INC.
West Warwick, Rhode Island 02893

INSTALLATION & OPERATION INSTRUCTIONS

THERM-X-TROL®

Thermal Expansion Absorbers (ST-5-C Through ST-210V-C)

PLEASE READ THE FOLLOWING INSTRUCTIONS CAREFULLY

⚠WARNING This product must be installed by a qualified professional.

⚠WARNING **EXPLOSION HAZARD.** Failure to follow the instructions in the accompanying product manual can cause a rupture or explosion; possibly causing serious or fatal injury, leaking or flooding and/or property damage.

⚠WARNING Use only potable water. Do not operate in a setting where the temperature can exceed 200° F or fall below 35° F and do not exceed the maximum working pressure specified for this product.

⚠WARNING **RUPTURE OR EXPLOSION HAZARD.** Like most pressurized tanks, this tank can over time corrode, weaken, and burst or explode.

⚠WARNING Do not adjust the pressure or re-pressurize this product except for any adjustments at the time of the initial installation when the product is new.

⚠WARNING Do not locate this product where leaking or flooding could cause damage to the surrounding area.

⚠WARNING **Chlorine & Aggressive Water Warning.** The water quality can significantly influence the life of your product. You should test for corrosive elements, acidity, total solids, and other relevant contaminants, including chlorine and treat your water appropriately to insure satisfactory performance and prevent premature failure.

⚠WARNING State of California Residents. This product contains a chemical known by the State of California to cause cancer. This product contains a chemical known by the State of California to cause birth defects or other reproductive harm.

Pre-Installation

1. Visually inspect THERM-X-TROL for any damage. If damage exists return roduct for replacement.
2. Adjust pre-charge to equal incoming pressure.
3. Replace and tighten plastic cap on air fitting.

For commercial water heater installations, contact AMTROL for information.

Installation

1. Install the THERM-X-TROL on the Cold Water Supply (CWS) line to the water heater at a point between the water heater and backflow preventer, check valve or pressure reducing valve (see Figure 1).
2. Once the THERM-X-TROL is installed, check the CWS line for any leakage. Make repairs if necessary.
3. Before the initial firing of the water heater, open any hot water fixture and draw water until all air is removed from the system. Turn the water heater temperature control to desired ending temperature level, (see water heater instructions).
4. To relieve initial thermal expansion, slightly open a hot water faucet. Continue until water heater aquastat temperature is satisfied. Once heater is at its operating range, no further bleeding of expanded water is required.

Figure 1.

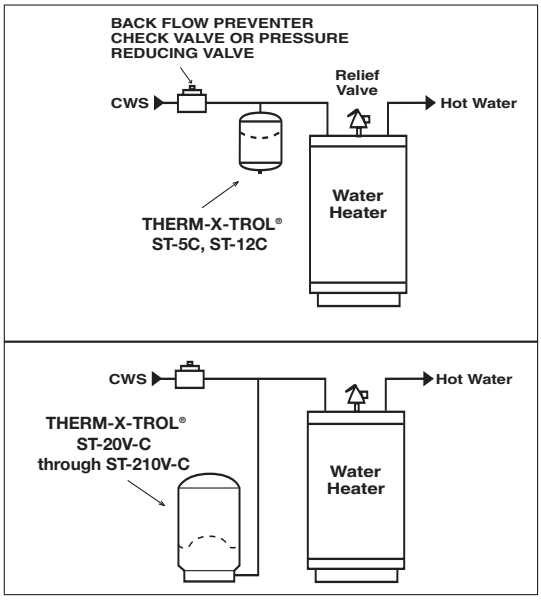

5. The system water heater and THERM-X-TROL will now be operational. The THERM-X-TROL will control temperature and pressure increases caused by thermal expansion to a level well below the water heater relief valve setting.

Maintenance

1. A professional plumber should check the complete heating system, including the THERM-X-TROL, yearly and more frequently as the system ages.

Operation

1. The THERM-X-TROL is installed in the supply line between the backflow preventer and the water heater. Its sealed-in air pre-charge prevents water from entering it until the system pressure exceeds the pre-charge pressure.
2. As the water temperature rises, expanded water enters the THERM-X-TROL's non-corrosive water reservoir. The pre-charged air chamber absorbs the pressure increase, keeping system pressures below the relief valve setting.
3. As hot water is used, the pressure in the air chamber forces water back into the system until the THERM-X-TROL is empty. At this point, the pressure in the air chamber once again equals the supply pressure.
4. Water treatment is not to exceed 200° F or fall below 35° F.

NOTE: Models are listed (ST-5-C thru ST-210V-C) under ANSI/NSF Std 61 and City of Los Angeles.

MARK OF THE ORIGINATOR

*** All ST-C Series models come with a 1 year warranty. See reverse side for warranty information.**

Revised 3/05
Part #9017-091

AMTROL® INC. LIMITED PRODUCT WARRANTY

Products covered: all Products manufactured by AMTROL Inc. ("AMTROL").

This warranty cannot be transferred – it is extended only to the original Purchaser or First User of the Product. By accepting and keeping this Product you agree to all of the warranty terms and limitations of liability described below.

IMPORTANT WARNING – READ CAREFULLY THE INSTALLATION, OPERATING AND MAINTENANCE INSTRUCTIONS MANUAL ("MANUAL") to avoid serious personal injury and/or property damage and to ensure safe use and proper care of this product.

Who Receives AMTROL's Product Warranty

All purchasers or first users of the new Product. The Warranty is non-transferable.

What is covered by this Warranty

AMTROL warrants to the purchaser or first user of the new Product that at the time of manufacture, the Product is free from defects in material and workmanship. **Any warranty claim must be made within one (1) year unless another time period is set forth in the Manual, measured from the time the Product was purchased.**

What AMTROL Will Do If You Have a Covered Warranty Claim

In the event of a breach of the foregoing warranty, AMTROL will at its option either make repairs to correct any defect in material or workmanship or supply and ship either new or used replacement parts or products. AMTROL will not accept any claims for labor or other costs.

What This Warranty Does Not Cover — Exclusions and Limitations

This Warranty does not cover any failure or problem unless it was caused by a defect in material or workmanship. In addition, this Warranty shall not apply:

- if the Product is not correctly installed, operated, repaired or maintained as described in the Manual provided with the Product;
- to any failure or malfunction resulting from abuse (including freezing); improper or negligent: handling, shipping (by anyone other than AMTROL), storage, use, operation, accident; or alteration, lightning, flood or any other environmental condition;
- to any failure or problem resulting from the use of the Product for any purpose other than those specified in the accompanying Manual or alteration of any part of the product;
- if the Product is used anywhere except the United States, its territories or possessions, or Canada;
- this Warranty does not cover labor costs, shipping charges, service charges, delivery expenses, administrative fees or any costs incurred in removing or reinstalling the Product;
- this Warranty does not cover any claims submitted to AMTROL or an AMTROL-authorized distributor or retailer more than 30 days after expiration of the applicable warranty time period described in this Warranty;
- this Warranty also does not cover repair or replacement costs not authorized in advance by AMTROL.

Additional Warranty Limitations

ALL IMPLIED WARRANTIES, INCLUDING THE IMPLIED WARRANTIES OF MERCHANTABILITY AND FITNESS FOR A PARTICULAR PURPOSE ARE SPECIFICALLY DISCLAIMED. Some states do not allow limitations on how long an implied Warranty lasts, so the above limitation may not apply to you.

Limitations of Remedies

THE REMEDIES CONTAINED IN THIS WARRANTY ARE THE PURCHASER'S OR FIRST USER'S EXCLUSIVE REMEDIES. IN NO CIRCUMSTANCES WILL AMTROL BE LIABLE FOR MORE THAN, AND PURCHASER-FIRST USER'S REMEDIES SHALL NOT EXCEED, THE PRICE PAID FOR THE PRODUCT. IN NO CASE SHALL AMTROL BE LIABLE FOR ANY SPECIAL, INDIRECT, INCIDENTAL OR CONSEQUENTIAL DAMAGES, WHETHER RESULTING FROM NONDELIVERY OR FROM THE USE, MISUSE, OR INABILITY TO USE THE PRODUCT OR FROM DEFECTS IN THE PRODUCT OR FROM AMTROL'S OWN NEGLIGENCE OR OTHER TORT. This exclusion applies regardless of whether such damages are sought for breach of warranty, breach of contract, negligence, strict liability, in tort or under any other legal theory. Such damages include, but are not limited to, inconvenience, loss or damage to property, mold, loss of profits, loss of savings or revenue, loss of use of the Products or any associated equipment, facilities, buildings or services, downtime, and the claims of third parties including customers. Some states do not allow the exclusion or the limitation of incidental or consequential damages, so the above limitation or exclusion may not apply to you.

What To Do If You Have a Problem Covered By This Warranty

Any covered Warranty service must be authorized by AMTROL. Contact the person from whom you purchased the Product, who **must** receive authorization from an AMTROL distributor or AMTROL. If you do not receive a prompt response, call AMTROL directly at 877-517-9673. Notice of a Warranty claim should be submitted by the authorized distributor to AMTROL at the following address:

AMTROL Inc.
Warranty Claim Dept.
1400 Division Rd.
West Warwick, RI 02893

Before AMTROL determines to provide any replacement part or Product, it may as a pre-condition to making such a determination require that the warranty claimant ship the Product, postage prepaid to an authorized AMTROL distributor, or to AMTROL and provide proof of purchase evidenced by the original sales receipt or Product registration.

Replacement Product Warranty

In case of replacement of a Product or any component part, AMTROL reserves the right to make changes in the design, construction, or material of the substitute components or products, which shall be subject to all of the terms and limitations of this Warranty, except that the applicable warranty periods shall be reduced by the amount of time the warranty claimant owned the product prior to submitting notification of the warranty claim.

The AMTROL logo and Therm-X-Trol are registered trademarks of AMTROL Inc.

13

Mécanique Nordique
Plumbing
Heating
Ventillation
mecanique.nordique@hotmail.com
1255 Rue J.A.Bombardier Lévis QC G7A 2P4
Tél : (418) 496-1109 Fax : (418) 496-3803

REVIEWED BY CONTRACTOR
Kudlik Construction Ltd.
NAME: Sandra Rousseau P.Eng
DATE: Jun 04, 2018

IQUALUIT WWTP UPGRADES

DRAWING FOR APPROVAL

ENGINEER: **NUNAMI STANTEC LIMITED**

DRAWING #: AD-013

Section	: 23 21 14
Article	: 2.3
Plans	: M602
Application	: AIR SEPARATOR -VORTEX TYPE
Brand	: ARMSTRONG VAS
Model	: VAS-4
Revised #	:
Supplyer	: WOLSELEY
Date	: **01/06/2018**
By	: Martin Boucher

STANTEC PROJECT #: 110126045
SUBMITTAL # AD-013

This review by Stantec is for general conformance with the design concept of Stantec's design of the:
☐ Architectural ☐ Electrical
☐ Structural ☐ Other
☑ Mechanical

component(s) only and does not mean that Stantec has verified or approves the shop drawing(s). The Contractor remains solely responsible for the shop drawing(s) and this review by Stantec does not relieve the Contractor of the Contractor's responsibility for errors or omissions in the shop drawing(s) or for meeting all requirements of the contract documents. This review does not mean that Stantec approves the detailed design inherent in the shop drawing, responsibility for which shall remain with the Contractor submitting same, nor does this review mean that Stantec accepts any deviation of the shop drawing(s) from the contract documents. The Contractor is responsible for confirming all dimensions and correlating them at the job site, for all construction means, methods and techniques, and for coordination of construction work of all trades, including coordination of all shop drawings.

Stantec

☑ REVIEWED
☐ REVIEWED, AS NOTED
☐ REVISE AND RESUBMIT
☐ NOT REVIEWED

DATE 2018-06-04
BY Brendan Zrum, P.Eng

TAG: AIR SEPARATOR

ARMSTRONG

SPEC 23 21 14 2.3

FILE NO:	37.621
DATE:	Sep. 08, 2011
SUPERSEDES:	37.621
DATE:	Dec. 18, 2007

Vortex Air Separators - Models VA / VAS: 4" to 12"

SUBMITTAL

JOB: _____ REPRESENTATIVE: _____

ORDER NO: _____ DATE: _____

ENGINEER: _____ SUBMITTED BY: _____ DATE: _____

CONTRACTOR: _____ APPROVED BY: _____ DATE: _____

MODEL NO. ORDERED: _____ QTY.: _____

TAG NO.: _____

All models designed and built to ASME Pressure Vessel Code, Section VIII, Division 1.

TYPICAL SPECIFICATION

Furnish & install an Armstrong Vortex® Air Separator, Model ___ VA or Model ___ VAS (with strainer) with flanged tangential connections as shown on plans. The unit shall be designed and built in accordance with the latest revisions of ASME Pressure Vessel Code, Section VIII, Division 1. A blowdown connection is provided for routine cleaning of the unit.

TECHNICAL DATA	
Max. Working Temperature	375°F (190°C)
Max. Working Pressure	4" TO 6" Models: 160 psi (1103 kPa) 8" TO 12" Models: 165 psi (1140 kPa)
Connection Type	150# Flanged ANSI (RFSO)

MATERIALS OF CONSTRUCTION	
Shell	4" TO 6" Models: Cast Iron 8" TO 12" Models: Fabricated Steel
Strainer	Steel Mesh (1/4" x 3/4")
Gasket	Non-Asbestos

MODEL		DIMENSION INCHES (MM)										MAX. FLOW RATE IN USGPM (L/S) FOR LINE VELOCITY FT/S (M/S)			WEIGHT LBS. (KG)		STRAINER SCREEN FREE AREA
LESS STRAINER	WITH STRAINER	A	B	C	D	E	F	H	J	K	N	4 (1.22)	6 (1.83)	8 (2.44)	VA	VAS	SQ. IN. (SQ. CM)
VA-4	VAS-4	4.00 (102)	1.50 (38)	9.50 (241)	18.00 (457)	2.25 (57)	6.80 (173)	22.25 (565)	10.75 (273)	16.00 (406)	9.00 (229)	160 (10.1)	240 (15.1)	320 (20.2)	121 (55)	151 (69)	76 (490)
VA-5	VAS-5	5.00 (127)	1.50 (38)	11.00 (279)	20.00 (508)	2.88 (73)	8.69 (221)	28 (711)	12.75 (324)	19.00 (483)	10.00 (254)	250 (9.84)	375 (14.8)	500 (31.6)	173 (79)	207 (94)	124 (800)
VA-6	VAS-6	6.00 (152)	1.50 (38)	12.50 (318)	24.00 (610)	4.00 (102)	9.85 (250)	32.24 (819)	16.00 (406)	22.00 (558)	12.00 (305)	360 (22.7)	540 (34.1)	720 (45.4)	264 (120)	306 (139)	183 (1181)
VA-8	VAS-8	8.00 (203)	2.00 (51)	16.00 (406)	28.00 (711)	5.00 (127)	12.81 (310)	41.25 (1048)	20.00 (508)	26.00 (660)	14.00 (356)	630 (39.8)	940 (59.3)	1250 (78.9)	228 (103)	332 (151)	302 (1949)
VA-10	VAS-10	10.00 (254)	2.00 (51)	20.00 (508)	32.00 (813)	5.75 (146)	15.00 (381)	49.50 (1257)	24.00 (610)	29.00 (737)	16.00 (406)	990 (62.5)	1500 (94.6)	1980 (124.9)	390 (177)	547 (248)	452 (2916)
VA-12	VAS-12	12.00 (305)	2.00 (51)	26.00 (660)	38.00 (965)	7.75 (197)	17.56 (446)	61.25 (1556)	30.00 (762)	36.00 (914)	19.00 (483)	1400 (88.3)	2100 (132.5)	2800 (176.7)	609 (276)	856 (388)	679 (4381)

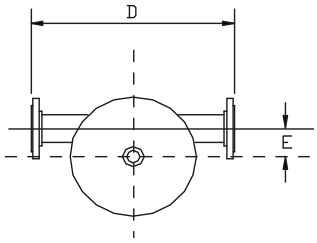

MODEL VA

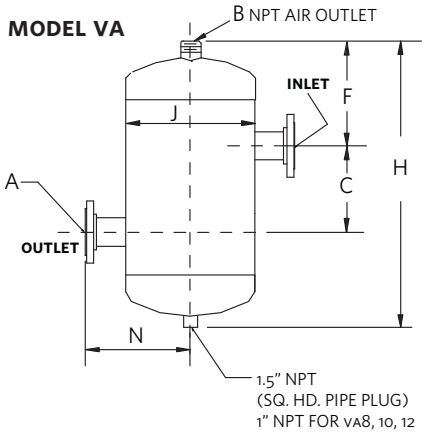

MODEL VAS

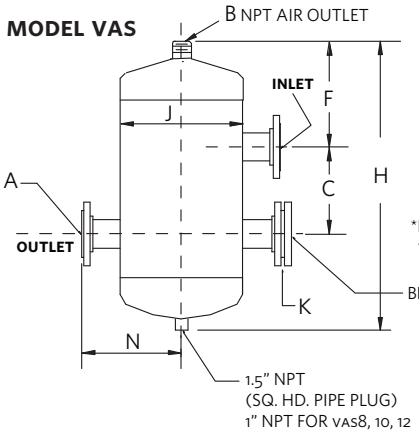

*K is distance required to remove strainer.

S. A. Armstrong Limited
23 Bertrand Avenue
Toronto, Ontario
Canada, M1L 2P3
T: 416-755-2291
F: 416-759-9101

Armstrong Pumps Inc.
93 East Avenue
North Tonawanda, New York
U.S.A. 14120-6594
T: 716-693-8813
F: 716-693-8970

Armstrong Integrated Limited
Wenlock Way
Manchester
United Kingdom, M12 5JL
T: +44 (0) 8444 145 145
F: +44 (0) 8444 145 146

© S.A. Armstrong Limited 2011

VORTEX AIR SEPARATORS | MODELS VA/VAS |

INSTALLATION AND OPERATING INSTRUCTIONS

File No: 37.874
Date: SEPTEMBER 22, 2016
Supersedes: 37.874
Date: DECEMBER 18, 2007

Sizes: 4" to 6" – Cast Iron
8" to 12" – Fabricated C. Steel

1.0 VESSEL DESCRIPTION

Armstrong VA/VAS Vortex Air Separators eliminate air quickly and efficiently from heating/cooling systems. Water enters and exits through unique **tangential** connections which promote a low velocity swirling effect in the centre of the unit. Centrifugal force moves the water to the outer edges of the unit and a vortex is formed. Entrained air migrates to the eye of the vortex (lower pressure point) and is evacuated at the top of the separator. The water exits the unit near the bottom of the unit, bubble free, protecting the system against the noise, corrosion and damage associated with entrained air.

VAS models are equipped with a stainless steel strainer.

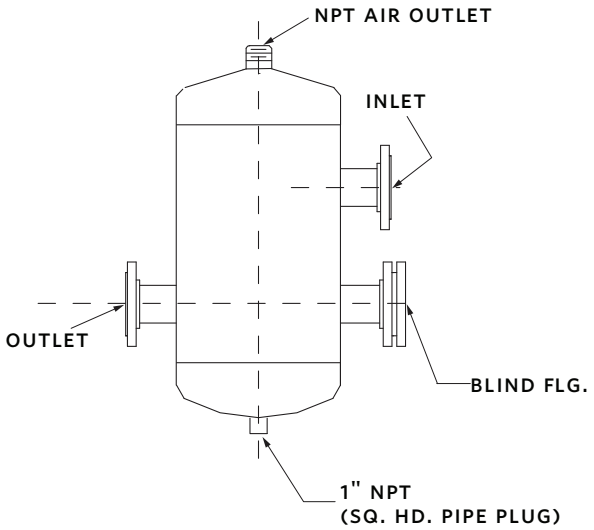

2.0 CONSTRUCTION DETAILS

Materials of construction

Shell: 4" to 6" models: Cast Iron
8" to 12" models: Fabricated steel

Strainer: Stainless steel mesh (¼"× ¾")

Gasket: Non-asbestos

Technical data

Max. working temperature: 375°F (190°C)

Max. working pressure: 4" to 6" models: 160 PSI (1103 kPa)
8" to 12" models: 165 PSI (1140 kPa)

Connection type: 150# Flanged ANSI (RFSO)

3.0 STEPS & PROCEDURE

- Visually inspect the air separator for damage, which may occur during transit.
- A manual drain can be added to help facilitate purging sediment from the air separator.
- VAS models have a strainer that must be removed and cleaned after 24 hours of operation.

DISTANCE REQUIRED TO REMOVE STRAINER

SIZE	DISTANCE inch (mm)
VAS 4	16 (406)
VAS 5	19 (483)
VAS 6	22 (558)
VAS 8	26 (660)
VAS 10	29 (737)
VAS 12	36 (914)

TORONTO

23 BERTRAND AVENUE
TORONTO, ONTARIO
CANADA
M1L 2P3
+1 416 755 2291

BUFFALO

93 EAST AVENUE
NORTH TONAWANDA, NEW YORK
U.S.A.
14120-6594
+1 716 693 8813

BIRMINGHAM

HEYWOOD WHARF, MUCKLOW HILL
HALESOWEN, WEST MIDLANDS
UNITED KINGDOM
B62 8DJ
+44 (0) 8444 145 145

MANCHESTER

WOLVERTON STREET
MANCHESTER
UNITED KINGDOM
M11 2ET
+44 (0) 8444 145 145

BANGALORE

#59, FIRST FLOOR, 3RD MAIN
MARGOSA ROAD, MALLESWARAM
BANGALORE, INDIA
560 003
+91 (0) 80 4906 3555

SHANGHAI

NO. 1619 HU HANG ROAD, XI DU TOWNSHIP
FENG XIAN DISTRICT, SHANGHAI
P.R.C.
201401
+86 21 3756 6696

SÃO PAULO

RUA JOSÉ SEMIÃO RODRIGUES AGOSTINHO,
1370 GALPÃO 6
EMBU DAS ARTES
SAO PAULO, BRAZIL
+55 11 4781 5500

ARMSTRONG FLUID TECHNOLOGY
ESTABLISHED 1934

ARMSTRONGFLUIDTECHNOLOGY.COM

MAKING ENERGY MAKE SENSE™

14

Mécanique Nordique
Plumbing
Heating
Ventillation
mecanique.nordique@hotmail.com
1255 Rue J.A.Bombardier Lévis QC G7A 2P4
Tél : (418) 496-1109 Fax : (418) 496-3803

REVIEWED BY CONTRACTOR
Kudlik Construction Ltd.
NAME: Sandra Rousseau P.Eng
DATE: Jun 04, 2018

IQUALUIT WWTP UPGRADES

DRAWING FOR APPROVAL

ENGINEER: **NUNAMI STANTEC LIMITED**

DRAWING #: AD-014

Section	: 23 52 00
Article	: 2.1 TO 2.3
Plans	: M802 BOILER SCHEDULE
Application	: HEATING BOILER
Brand	: BUDERUS WITH RIELLO BURNER
Model	: G515/11 , RL50/M
Revised #	:
Supplyer	: LES CONTRÔLES MÉTHOT INC
Date	: **01/06/2018**
By	: Martin Boucher

STANTEC PROJECT #: 110126045
SUBMITTAL # AD-014

This review by Stantec is for general conformance with the design concept of Stantec's design of the:
☐ Architectural ☐ Electrical
☐ Structural ☐ Other
☑ Mechanical

component(s) only and does not mean that Stantec has verified or approves the shop drawing(s). The Contractor remains solely responsible for the shop drawing(s) and this review by Stantec does not relieve the Contractor of the Contractor's responsibility for errors or omissions in the shop drawing(s) or for meeting all requirements of the contract documents. This review does not mean that Stantec approves the detailed design inherent in the shop drawing, responsibility for which shall remain with the Contractor submitting same, nor does this review mean that Stantec accepts any deviation of the shop drawing(s) from the contract documents. The Contractor is responsible for confirming all dimensions and correlating them at the job site, for all construction means, methods and techniques, and for coordination of construction work of all trades, including coordination of all shop drawings.

Stantec

☑ REVIEWED
☐ REVIEWED, AS NOTED
☐ REVISE AND RESUBMIT
☐ NOT REVIEWED

DATE 2018-06-05
BY Brendan Zrum, P.Eng

MET HOT

Methot Controls Inc.

Québec : 1060, boul. Michèle-Bohec, Suite 101, Blainville, Québec, J7C 5E2 **Fax :** (450) 433-6866 / 800-433-3398 **Tel :** (450) 433-9878 / 800-638-4682

Ontario : Sales Office Toronto Ontario, All mailing to Quebec Head Office **Fax :** (905) 850-8012 / 800-433-3398 **Tel :** (905) 850-3037 / 800-638-4682

Engineering drawing for Projet

Iqaluit Waste Water Plant

Presented to

Martin Boucher
Mécanique Nordique
1255, Rue J.-A. Bombarider, Lévis, Quebec, G7A 2P4
Tel : (418) 496-1109 **Fax :** (418) 496-3803

Engineering Company

Martin Boucher
Mécanique Nordique
1255, Rue J.-A. Bombarider, Lévis, Quebec, G7A 2P4
Tel : (418) 496-1109 **Fax :** (418) 496-3803

Our Reference

1810208S1R5
Rev. : 5

Drawings presented by

Michael McNamara Ext:201

01-06-2018

Lot #1 **G515/11-K**

Quantity	Brand	Model	Description
2		ME-BLR	Boiler

Accessories

Buderus	G515/11-K	Cast iron boiler	
Input capacity	1881 Mbh	- Sections	: Field assembly
- Output capacity	: 1582 Mbh	- Item	: 2-51511
- Construction	: 87 Psig	-	:
Conbraco	10-615-10	Safety valve set at 50 Psig (1 x1-1/4)	
Buderus	CB-G515-G615	Cleaning Brush Kit G515 and G615	

Additional Information

The standard safety vale setting is 50 Psig. Other valve settings are available on request. By approving these submittals you are accepting this selection.

Quantity	Brand	Model	Description
2		ME-BUR	Burner

Accessories

Riello	RL50/M-208	Burner	
Fuel	Oil	- Item	: C9513300
- Operation	: Modulation	- PID controller RWF55	: 20094961
- Voltage	: 208V/3Ph/60Hz	-	:
Riello	(C7000327)	Relay	
Type	Relay	- Ring Alarm Bell	: No
- Function	: Power ON	- Dry Contact Seperate	: No

Quantity	Brand	Model	Description
2		ME-LAB	Labour

Specification Sheet

- Unloading	: Contractor	- Jacketing	: Contractor
- Positioning	: Contractor	- Control Installation	: Contractor
- Hydrostatic Test	: Contractor	- Service Hook-up	: Contractor
- Burner Installation	: Contractor	- Connection to DDC	: By others
- Harness Connection	: Contractor	- Start-up	: Contractor
- Section Assembly	: Contractor	- Workmanship Warranty	: Contractor

---

Quantity	Brand	Model	Description
1		(NOTE-SPEC)	Our proposal is based on the following documents only

Specification Sheet

- Specification Section	: 235200	-	:

Additional Information

Exceptions :

Art.2.1.12 Supply and return only

Art.2.1.17 Anchor bolts by others

Art.2.1.18 By others

Art.2.1.19 By others

Art.2.2.2.2-3 Pressure/temperature gauge combine

Art.2.2.2.5-6 By others

Art.2.3.2.4-6 By others

Art.2.3.3.5.4 RWF55

Art.3.2 By others

Art.3.5 By others

Venting by others

BUDERUS

G315 | G515 | G615

Cast Iron Commercial Boilers



- High Efficiency—Combustion Efficiencies Up to 88.2%
- 350 to 3,982 MBH Output
- Thermostream Design Eliminates Thermal Shock

Superior Equipment by Design

Comfortable. Efficient. Intelligent Heating.

Buderus



G315 | G515 | G615

Thermostream Design

The Buderus developed Thermostream principle is proven for higher efficiency and improved system reliability in high volume heating systems. Condensation and thermal shock are made impossible by design, as cool return water mixes internally and is preheated with supply water before exposure to directly heated surfaces. This process eliminates hot and cold spots in the boiler and balances water flow throughout all boiler sections. The Thermostream design permits continuous low temperature operation under normal return water without requiring a minimum boiler return temperature. Internal water circulation and injection into each boiler section combined with deflection plates ensure condensate free boiler operation—even under no flow conditions.

A Better Way to Heat

The Buderus commercial Thermostream boilers are designed with many physical attributes setting them above the competition and increasing their longevity and efficiency. The burner doors are field adjustable to swing fully open from either side, to enable the boilers to fit in any location. These boilers are shipped knocked down for easy transport, the G315 and the G515 can also be shipped as an assembled block. Due to the unique chamber design, no refractory materials are used. This reduces the number of service calls and maximizes heat transfer. Buderus precision castings eliminate the need for manual grinding. Precision beveled steel push nipples join cast iron sections and high temperature flue sealants are used to sustain pressurized operation.

The G315 and G515 come with a full 3½" of thermal insulation, and the G615 comes with a full 4" of thermal insulation to reduce standby heat loss. All Buderus cast iron commercial boilers are manufactured with the Buderus GL-180M cast iron with a silicone "barrier skin." To streamline the appearance of the boilers, the supply and return connections for the G315 are located at the rear of the boiler, while the G515/G615 have top supply and a rear return. These boilers are for use with hot water and can be installed with gas, oil or dual fuel burners.

Intelligent Heating—by Design

Buderus, the world leader in heating technology, manufactures the highest quality boilers based on centuries of experience. With its innovative design and quality manufacturing, a Buderus boiler will outlast and out-perform virtually any other commercial hot water boiler system in the world.

The G315, G515 and G615 are designed to maximize the heating value of every ounce of fuel and are built with the highest quality materials. Established in 1731, Buderus uses state-of-the-art techniques in the design and manufacturing of its boilers.



Design Benefits

- Eliminates the need for bypass loop or shunt pump
- Eliminates hot and cold spots in the boiler
- Allows operation at low return water temperatures without thermal shock concerns
- Minimum supply temperature of 122°F with standard control
- Ensures balanced water flow through all boiler sections

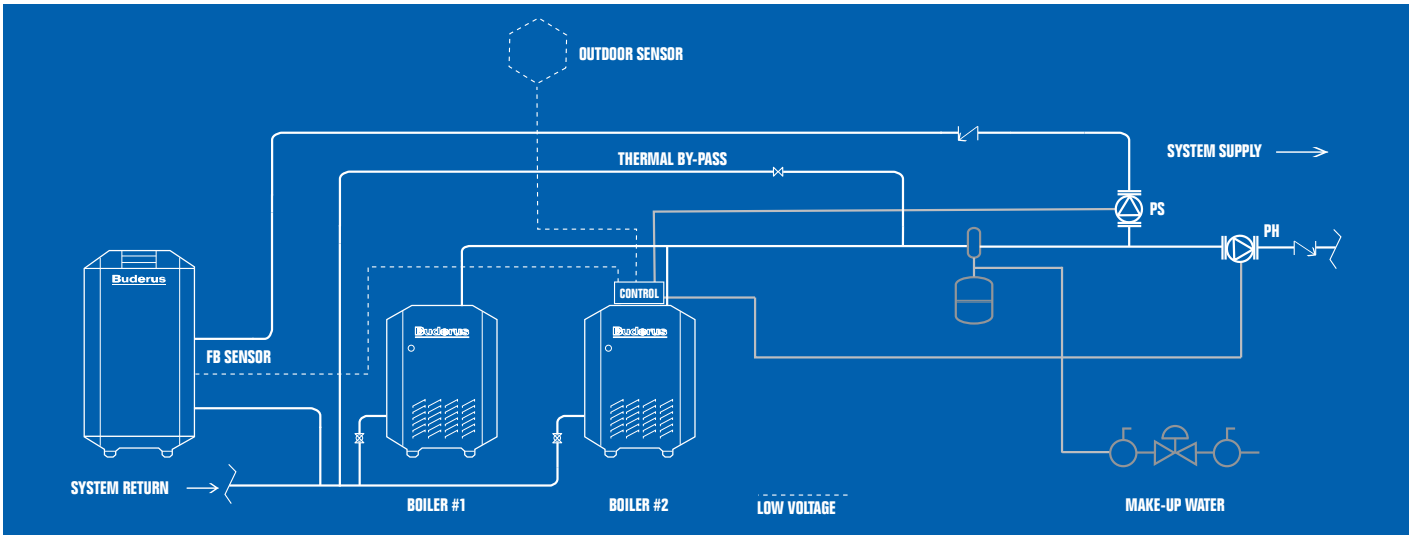

NOTE: This drawing is conceptual in nature and does not purport to address all design, installation or safety considerations.

Boiler Construction

The boiler sections are assembled with beveled, surface-profiled push nipples for long, trouble-free watertight operation. Boiler flueways are manufactured to be gas tight with tongue and groove section design and elastic, high temperature resistant sealing rope. A permanent dry door gasket ensures repeated positive sealing of the full swing burner door. Because flue gases cannot escape through the seams between boiler sections, the boilers are able to retain heat more efficiently.

GL-180M Gray Cast Iron

Buderus GL-180M silicone injected, gray cast iron obtains its superior material characteristics primarily from a high carbon (graphite) and silicone content.

Buderus GL-180M gray cast iron has excellent corrosion resistance, exceptional casting characteristics, 40% greater flexibility and elasticity as well as high thermal conductivity. Buderus developed the special substances that are impregnated during the casting process to improve the mechanical properties of cast iron. The graphite precipitates into smaller, modified flakes which produce GL-180M cast iron with 40% greater elasticity and a high silicone barrier for corrosion protection. All sections are heat treated to relieve thermal stresses. Additional elements further enhance the properties of the GL-180M. The graphite appears in two different forms in the microstructure: nodular form producing excellent tensile strength and great elasticity and graphite flakes producing excellent corrosion resistance against acidic combustion products.

Full Three Pass Design—for High Efficiency

Buderus developed the full three pass system to increase the heat transfer and efficiency of boilers. This design allows more heat to be transferred during all three passes, unlike conventional boilers that only use one pass to transfer heat. This system maximizes the total possible heat available with the lowest fuel consumption possible. To greatly decrease standby loss Buderus has manufactured a 3½" and 4" thick thermal insulation.

The Three-Pass Boiler is Designed for:

- Optimized combustion with positive pressure-fired boilers and tailored chamber geometry—no need for a heat-consuming refractory or target wall eliminating the need for costly repairs
- Minimal stack losses with the modified three-pass flue design's large heat transfer areas
- Low standby losses with a full 3½" to 4" jacket of thermal insulation around the entire block—even underneath the boiler

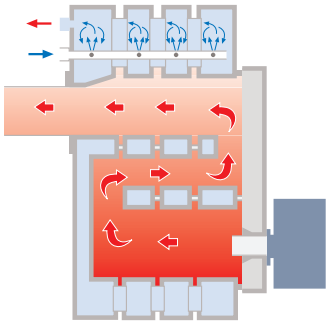

How it Works

The flame fires into the first chamber. Then the flue products flow through the second pass to the front of the boiler. From there they reverse direction again—moving through the third pass to the back, and finally exiting via the flue connection into the chimney. Because the gases are held in the boiler longer this allows the cast iron to absorb the maximum amount of heat, resulting in a lower stack temperature and a higher efficiency.

SPECIFICATIONS		
BOILER MODEL	G515/11	G515/11
INPUT CAPACITY	13.6 USG/Hr	51.5 L/Hr
GROSS OUTPUT	1 652 MBTU/Hr	483.8 KW
FORCE	47.3 BHP	463.9 KW
DESIGN PRESSURE	87 PSI	600 KPa
HEATING SURFACE	186.7 Ft²	17.3 M²
MAXIMUM TEMPERATURE	240 °F	116 °C
WATER CONTENT	107 Gal	407 L
DRY WEIGHT	4 188 Lbs	1 899 Kg
OPERATING WEIGHT	5 074 Lbs	2 031 Kg

CONNECTIONS		
VK	SUPPLY	4"
RK	RETURN	4"
EL	DRAIN	3/4" NPT
V	VENT	10"
A	HIGH TEMPERATURE AQUASTAT	3/4" NPT
B	PRESSURE AND TEMPERATURE GAUGE	1/2" NPT
C	TEMPERATURE PROBE	3/4" NPT
D	LOW WATER CUTOFF	3/4" NPT
E	SAFETY VALVE	1-1/4" NPT

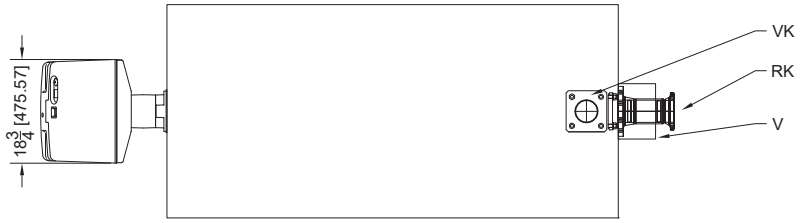

PLAN VIEW

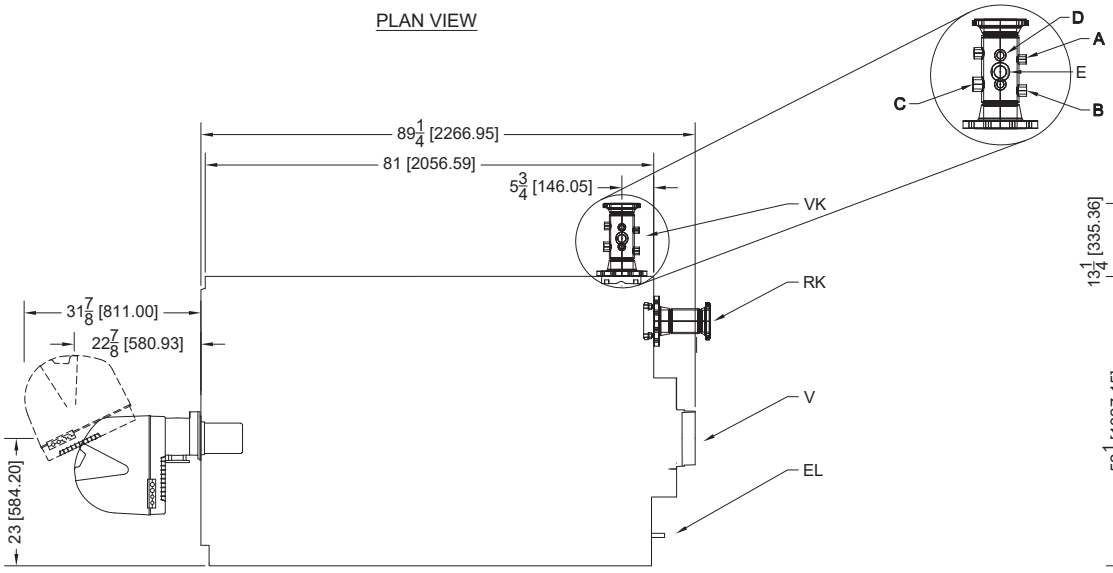

SIDE VIEW

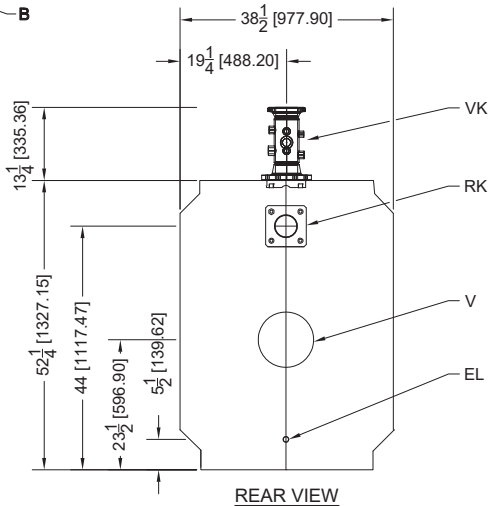

REAR VIEW

Notes:

1. Dimensions are written like this: INCHES [MM]

METHOT
Tel.: 1-800-638-4682 Fax.: 1-800-433-3398
www.methot.ca

G515/11

DIMENSIONS

#	REVISIONS	DATE	CAD FILE
3	Dimensions	06/JUL/15	G515-11 (Rev 3).dwg

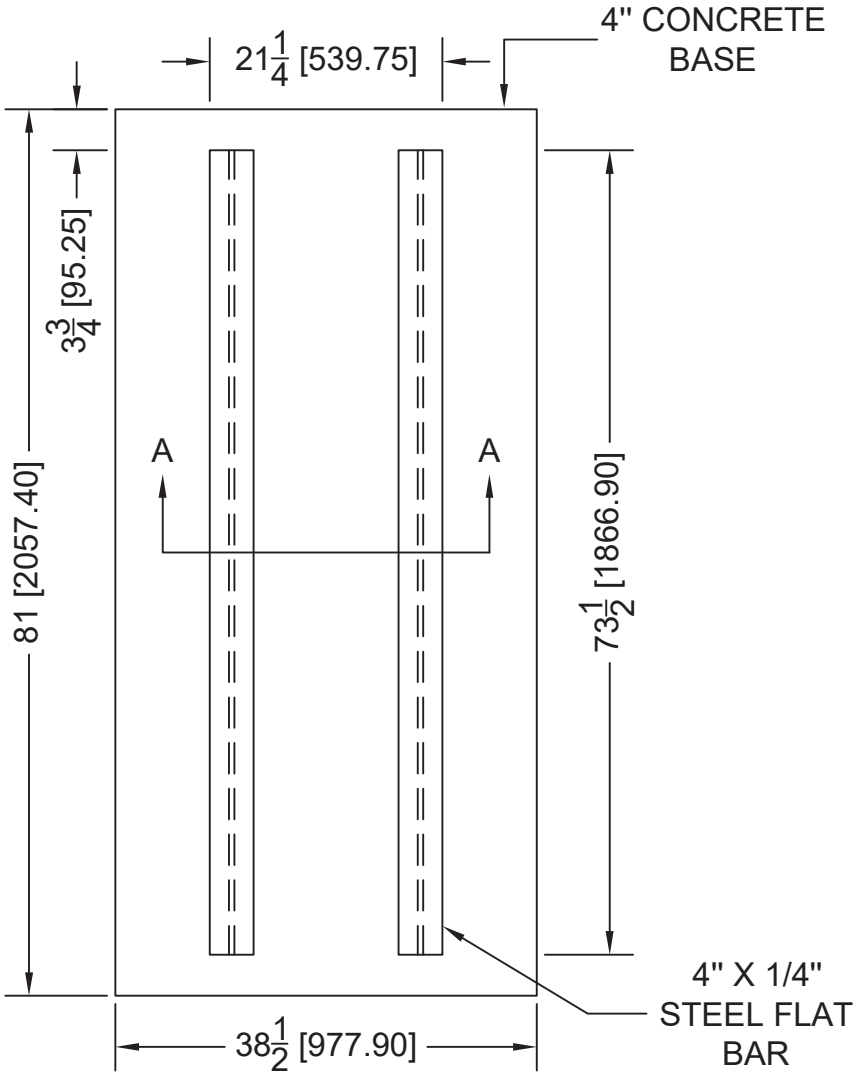

IMPORTANT: BUDERUS REQUEST A FLAT SURFACE FOR THE BOILER ASSEMBLY

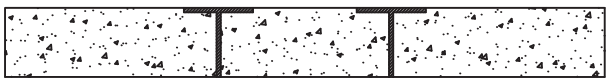

VIEW A-A

FLAT BAR INSTALLATION FOR FIELD ASSEMBLY ON A NEW CONCRETE BASE

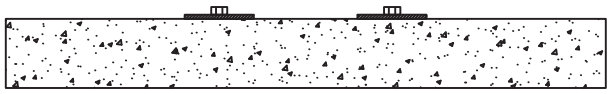

VIEW A-A

FLAT BAR INSTALLATION FOR FIELD ASSEMBLY ON AN EXISTING CONCRETE BASE

NOTE: FLAT BAR SUPPLIED BY CONTRACTOR

METHOT
Tel.: 1–800–638–4682 Fax.: 1–800–433–3398
www.methot.ca

G515/11

FOUNDATIONS

#	REVISIONS	DATE	CAD FILE

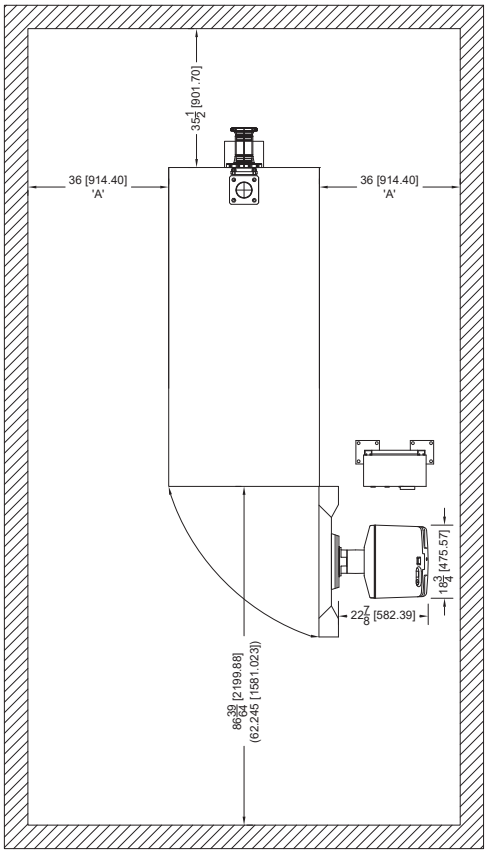

Notes:

1. Dimensions are written like this: INCHES [MM]
2. General minimum clearances are shown in parenthesis. Feel free to contact METHOT for special applications.

A. Minimum clearances can be as short as 12" [305] as long as there is no gas train, control panel or door hinges on this side.

B. 1m minimum clearance in front of the burner, our clearances already include it.

METHOT
Tel.: 1-800-638-4682 Fax.: 1-800-433-3398
www.methot.ca

G515/11

RECOMMENDED CLEARANCES FOR 1 BOILER

#	REVISIONS	DATE	CAD FILE
3	Boiler Clearances	06/JUL/15	G515-11 (Rev 3).dwg

RIELLO

GB

Light oil burners

Low-high-low or modulating operation

c UL us LISTED



CODE	MODEL
3471070	RL 28/M
3471270 - 3471470	RL 38/M
3471670 - 3471675	RL 50/M

2915762 (6) - 03/2013

TECHNICAL DATA

MODEL			RL 28/M	RL 38/M	RL 38/M	RL 50/M	RL 50/M
Output (1)	High	MBtu/hr (3)	630 - 1260	896 - 1708	896 - 1708	1120 - 2240	1120 - 2240
		GPH	4.5 - 9	6.4 - 12.2	6.4 - 12.2	8 - 16	8 - 16
	Low	MBtu/hr (3)	336 - 630	378 - 896	378 - 896	490 - 1120	490 - 1120
		GPH	2.4 - 4.5	2.7 - 6.4	2.7 - 6.4	3.5 - 8	3.5 - 8
Fuel			# 2 fuel oil				
Operation			Low - high or modulating				
Nozzle		number	1 (nozzle with return)				
Standard applications			Boilers: water, steam, thermal oil				
Ambient temperature		°F	32 - 104 (0 - 40 °C)				
Combustion air temperature		°F max	140 (60 °C)				
Main power supply (+/- 10%)		V/Ph/Hz	120/1/60		208-230 / 460 / 575 / 3/ 60		120-230/1/60
Fan motor		rpm	3400	3400	3400	3400	3400
		W - HP	370 - 0.5	370 - 0.5	550 - 0.75	550 - 0.75	550 - 0.75
		V	120	120	208 - 230 / 460 / 575	208 - 230 / 460 / 575	120 - 230
		A	5.2	5.2	3.2 - 1.6 - 1.3	3.2 - 1.6 - 1.3	9.8 - 4.9
Motor capacitor		µF	45				20
Ignition transformer		V1 - V2	120 V - 2 x 5 kV				
		I1 - I2	3.7 A - 35 mA				
Pump	delivery (at 290 PSI)	GPH	32				
	pressure range	PSI	145 - 290				
	fuel temperature	°F max	140 (60 °C)				
Electrical power consumption		W max	550	600	700	800	750
Electrical protection			NEMA 1				
Noise levels (2)		dBA	68	70	70	75	75

(1) Reference conditions: Ambient temperature 68 °F (20 °C) - Barometric pressure 394" W.C. - Altitude 329 ft.
(2) Sound pressure measured in manufacturer's combustion laboratory, with burner operating on test boiler and at maximum rated output.
(3) Equivalent Btu values based on 1 USGPH = 140,000 Btu/hr.

Burner models designations

Model	Code	Voltage	Flame safeguard
RL 28/M	**C9511300** (3471070)	120/1/60	Burner mounted
RL 38/M	**C9512300** (3471470)	208-230/460/3/60	Burner mounted
	C9512301 (3471470)	575/3/60	Burner mounted
	(3471270)	120/1/60	Burner mounted
RL 50/M	**C9513300** (3471670)	208-230/460/3/60	Burner mounted
	C9513301 (3471670)	575/3/60	Burner mounted
	(3471675)	120-230/1/60	Burner mounted

ACCESSORIES (optional):

Modulating control kit
Two components should be ordered:
- modulating control to install on the burner;
- probe to install on the boiler.

PARAMETER TO BE CHECKED		PROBE		MODULATING CONTROL	
	Range	Type	Code	Type	Code
Temperature	- 212...+ 932 °F (- 100...+ 500 °C)	PT 100	3010110	RWF40	3010212
Pressure	0...36.3 PSI (0...2.5 bar)	Probe with output	3010213		
	0...232 PSI (0...16 bar)	4...20 mA	3010214		

Kit for lengthening the combustion head
L = Standard length
L1 = Length obtainable with the kit

COD. 3010277	L = 9 15/32"	L1 = 13 13/16"	• RL 28/M
COD. 3010278	L = 9 15/32"	L1 = 13 13/16"	• RL 38/M
COD. 3010279	L = 9 15/32"	L1 = 13 13/16"	• RL 50/M

Flame inversion boiler kit
COD. 3010178 • RL 28/M - RL 38/M
COD. 3010179 • RL 50/M

Important:
The installer is responsible for the supply and installation of any safety device(s) not indicated in this manual.

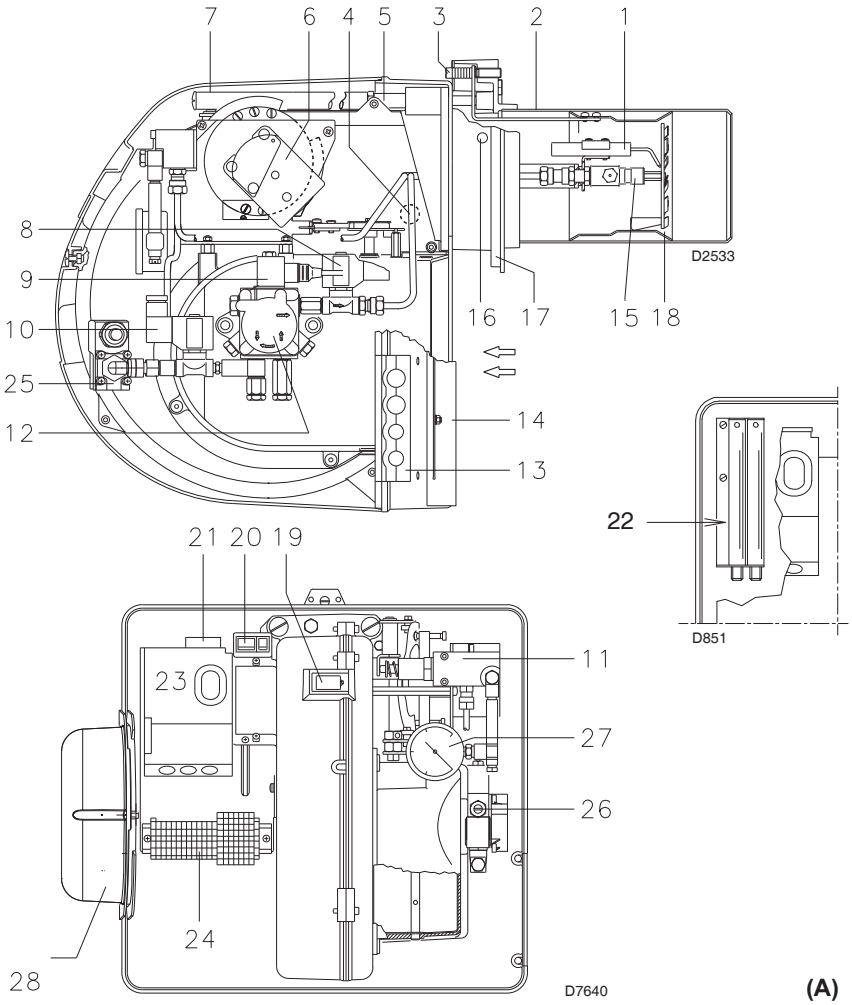

(A)

inch	A	B	C	lbs
RL 28/M	39 31/32“	24 13/16“	19 11/16“	86
RL 38/M	39 31/32“	24 13/16“	19 11/16“	90
RL 50/M	39 31/32“	24 13/16“	19 11/16“	92
RL 50/M	39 31/32“	24 13/16“	21 11/16“	94

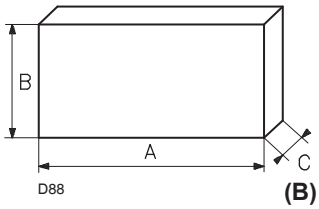

(B)

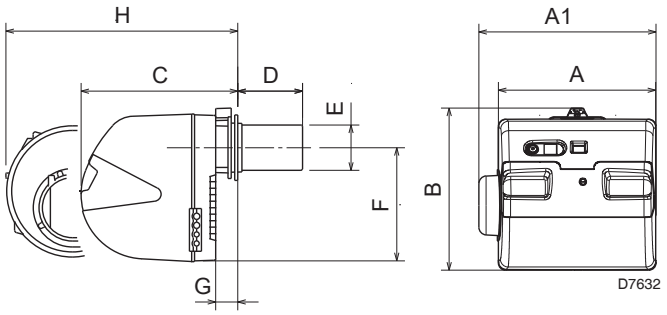

inch	A	A1	B	C	D (1)
RL 28/M	18 23/32”	-	18 21/32”	18 13/32”	9 15/32” - 13 13/16”
RL 38/M	18 23/32”	-	18 21/32”	18 13/32”	9 15/32” - 13 13/16”
RL 50/M three-phase	18 23/32”	-	18 21/32”	18 13/32”	9 15/32” - 13 13/16”
RL 50/M single-phase	-	21 3/16”	18 21/32”	18 13/32”	9 15/32” - 13 13/16”

inch	E	F	G	H (1)
RL 28/M	5 1/2”	13 27/32”	2 1/16”	26 15/32” - 31 3/4”
RL 38/M	5 1/2”	13 27/32”	2 1/16”	26 15/32” - 31 3/4”
RL 50/M three-phase	5 31/32”	13 27/32”	2 1/16”	26 15/32” - 31 3/4”
RL 50/M single-phase	5 31/32”	13 27/32”	2 1/16”	26 15/32” - 31 3/4”

(C)

(1) Blast tube: short - long (obtainable with the kit)

BURNER DESCRIPTION (A)

1 Ignition electrodes
2 Combustion head
3 Screw for combustion head adjustment
4 Photocell (cad cell)
5 Screw for fixing fan to flange
6 Servomotor provides adjustment of fuel delivery regulator and of air damper. When the burner is not operating the air damper is fully closed in order to reduce heat dispersion from the boiler due to the flue draft which draws air from the fan suction inlet.
7 Slide bars for opening the burner and inspecting the combustion head
8 Safety solenoid valve
9 Pump delivery valve
10 Valve on nozzle return
11 Pressure regulator on nozzle return
12 Pump
13 Plate prearranged to drill 4 holes for the passage of hoses and electrical cables.
14 Air damper
15 Non-drip nozzle holder
16 Fan pressure test point
17 Boiler mounting flange
18 Flame stability disk
19 Flame inspection window
20 Power switch for different operation:
automatic - manual - off
Button for:
power increase - power reduction
21 Motor contactor and thermal overload with reset button (RL 38 - 50/M)
22 Extensions for slide bars 7)
23 Flame safeguard with lock-out pilot light and lock-out reset button
24 Terminal strip
25 High oil pressure switch
26 Pump pressure adjustment
27 Pressure gauge for pressure on nozzle return
28 Protection (for RL 50/M single-phase burner)

Two types of burner failure may occur:
Flame safeguard lock-out:
If the flame relay 23)(A) pushbutton lights up, it indicates that the burner is in lock-out.
To reset, press the pushbutton.
Motor trip (RL 38 - 50/M):
release by pressing the pushbutton on thermal overload 21)(A).

PACKAGING - WEIGHT (B) - Approximate measurements

- The burners are shipped in cardboard boxes with the maximum dimensions shown in Table (B).
- The weight of the burner complete with packaging is indicated in Table (B).

MAX. DIMENSIONS (C) - Approximate measurements
The maximum dimensions of the burner are given in (C).
Inspection of the combustion head requires the burner to be opened and the rear part withdrawn on the slide bars.
The maximum dimension of the burner, without casing, when open is give by measurement H.

STANDARD EQUIPMENT

2 - Flexible hoses
2 - Gaskets for flexible hoses
1 - Burner head gasket
4 - Screws to secure the burner flange to the boiler 3/8 W x 1”
1 - Adaptor G 1/8“ / 1/8“ NPT
1 - Instruction booklet
1 - Spare parts list

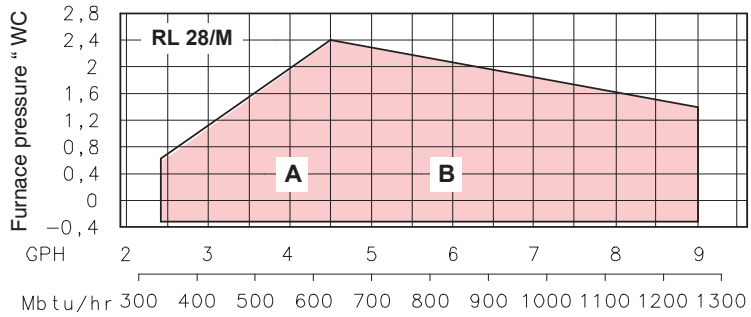

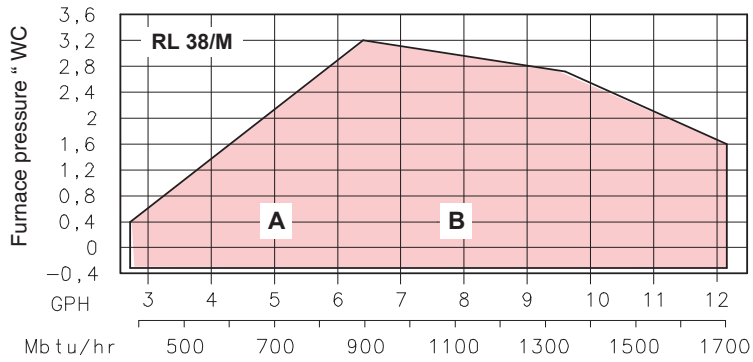

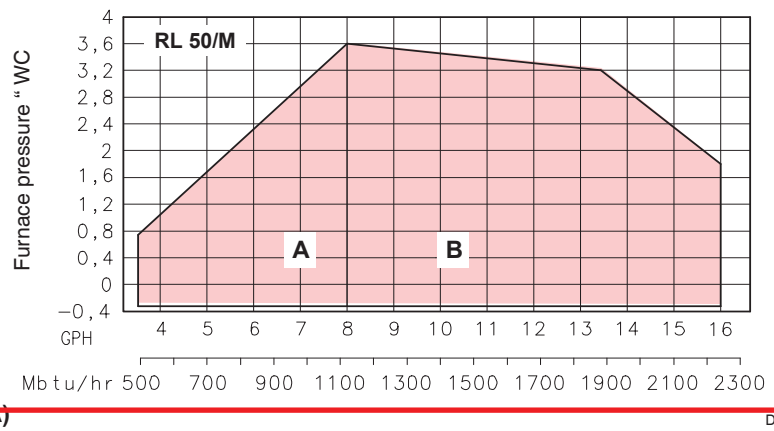

(A) D2526

inch	A	B	C
RL 28/M	$6^{5}/_{16}$"	$8^{13}/_{16}$"	$^{3}/_{8}$ W
RL 38/M	$6^{5}/_{16}$"	$8^{13}/_{16}$"	$^{3}/_{8}$ W
RL 50/M	$6^{5}/_{16}$"	$8^{13}/_{16}$"	$^{3}/_{8}$ W

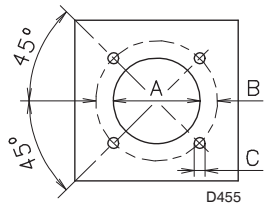

(B)

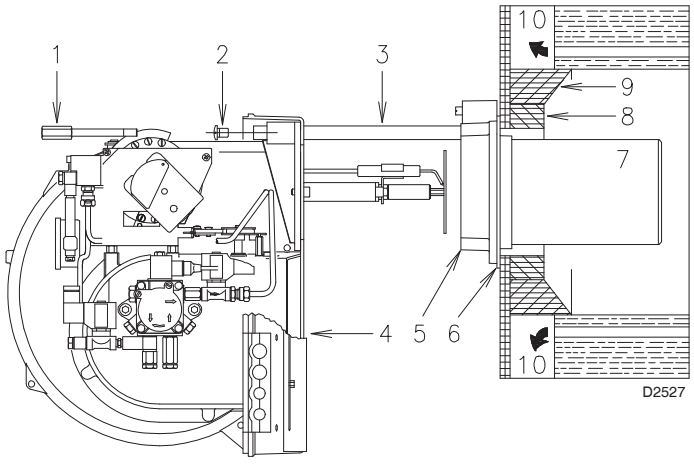

(C)

FIRING RATES (A)

During operation, burner output varies between:
- **MINIMUM OUTPUT** : area A
- **MAXIMUM OUTPUT** : area B

Graphs (A):
Horizontal axis : Burner output
Vertical axis : Heater furnace pressure
The firing rate may be found by plotting a vertical line from the desired delivery and a horizontal line from the pressure in the combustion chamber. The intersection of these two lines is the firing rate which must lie within area A, for MIN output, and within area B, for MAX output.
Important:
The FIRING RATE area values have been obtained considering a surrounding temperature of 68 °F (20 °C), and an atmospheric pressure of 394" W.C. and with the combustion head adjusted as shown on page 6.

Note:
The FIRING RATE areas given in figure (A) have been reduced by 10% with respect to the maximum range that can be reached.

Consult Appendix on page 22 for operation at different ambient temperatures and / or altitudes.

MINIMUM FURNACE DIMENSIONS

The firing rates were set in relation to certified test boilers.
Figure below indicates the diameter and length of the test combustion chamber.

Example:
output 1388 MBTU/h:
diameter 20 inch - length 4.9 ft.

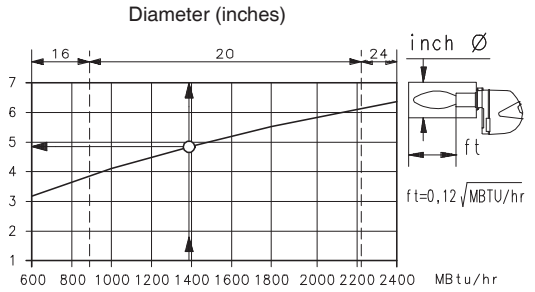

INSTALLATION

BOILER PLATE (B)

Drill the combustion chamber mounting plate as shown in (B). The position of the threaded holes can be marked using the burner head gasket supplied with the burner.

BLAST TUBE LENGTH (C)

The length of the blast tube 7) must be selected according to the indications provided by the manufacturer of the boiler, and in any case it must be greater than the thickness of the boiler door complete with its insulation. The range of lengths available, (inch), is as follows:

Blast tube 7):	RL 28/M	RL 38/M	RL 50/M
• short	$9^{15}/_{32}$"	$9^{15}/_{32}$"	$9^{15}/_{32}$"
• long	$13^{13}/_{16}$"	$13^{13}/_{16}$"	$13^{13}/_{16}$"

For boilers with front flue passes 10) or flame inversion chambers, protective insulation 8) must be inserted between the boiler refractory 9) and the blast tube 7).
This protective insulation must not compromise the extraction of the blast tube.
For boilers having a water-cooled front the insulation 8)-9)(C) is not required unless it is required by the boiler manufacturer.

SECURING THE BURNER TO THE BOILER (C)

Disassemble the blast tube 7) from the burner 4) by proceeding as follows:
- remove the screws 2) from the two slide bars 3).
- Remove the screw 1) fixing the burner 4) to the flange 5).
- Withdraw the blast tube 7) complete with flange 5) and slide bars 3).

Secure flange 5)(C) to the boiler plate inserting the supplied gasket 6). Use the 4 screws provided after having protected the thread with an antilocking product.
The burner-boiler seal must be airtight.

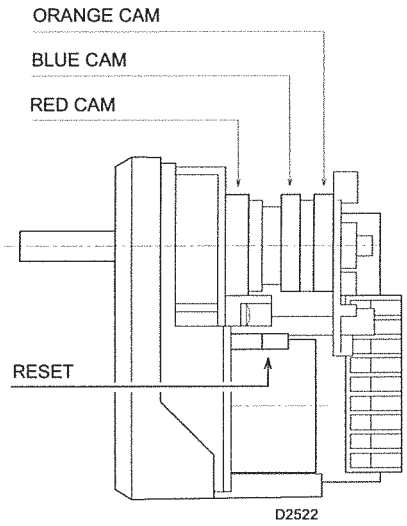

(A)

SUNTEC AL 95 C

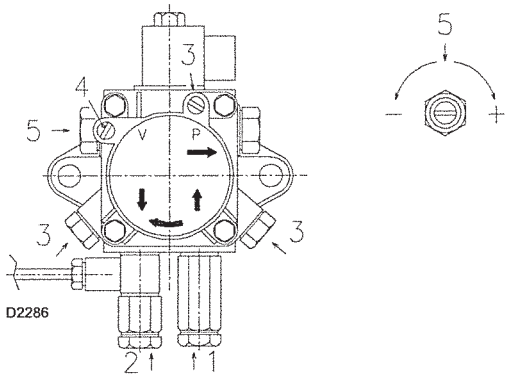

		AL 95 C
A	GPH	32
B	PSI	145 - 290
C	"Hg	13
D	cSt	2 - 12
E	°F - °C	140 - 60
F	PSI	29
G	PSI	290
H	inch	0,006

(B)

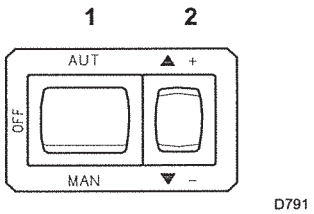

(C)

SERVOMOTOR (A)

The servomotor provides simultaneous adjustment of the air damper 11)(B) page 9 and the pressure regulator 9) by means of a double variable profile cam, 4) and 7). The servomotor rotates through 90° in 25 seconds.
Do not alter the factory setting for the cams; simply check that they are set as indicated below:

Red cam : 90°
Limits rotation toward maximum position.
Blue cam : 0°
Limits rotation toward the minimum position. When the burner is shut down the air damper must be closed: 0°.
Orange cam : 15°
Adjusts the ignition position and the MIN output.

PUMP (B)

1 - Suction	1/4" NPT
2 - Return	1/4" NPT
3 - Pressure gauge attachment	G 1/8"
4 - Vacuum gauge attachment	G 1/8"
5 - Pressure adjustment screw	

A - Min. delivery rate at 290 PSI pressure
B - Delivery pressure range
C - Max. suction pressure
D - Viscosity range
E - Max fuel oil temperature
F - Max. suction and return pressure
G - Pressure calibration in the factory
H - Filter mesh width

PUMP PRIMING

- **Before starting the burner, make sure that the tank return line is not clogged. Obstructions in the line could cause the seal located on the pump shaft to break.**
- In order for self-priming to take place, one of the screws 3)(B) of the pump must be loosened to bleed off the air contained in the suction line.
- Start the burner by closing the control circuit switch 1)(C) in the "MAN" position. As soon as the burner starts, check the direction of rotation of the fan blade, by looking through the flame inspection window 19)(A)p.4.
- The pump can be considered primed when the fuel oil starts coming out of the screw 3). Stop the burner: switch 1)(C) set to "OFF" and tighten the screw 3).

The time required for this operation depends upon the diameter and length of the suction tubing. If the pump fails to prime at the first cycle of the burner and the burner locks out, wait approx. 15 seconds, reset the burner, and then repeat the starting operation as often as required. After 5 or 6 starting operations allow 2 or 3 minutes for the transformer to cool.

Important
The priming operation is possible because the pump is already full of fuel when it leaves the factory. If the pump has been drained, fill it with fuel through the opening for the vacuum gauge prior to starting; otherwise, the pump will seize. Whenever the length of the suction piping exceeds 66 - 99 ft, the supply line must be filled using a separate pump.

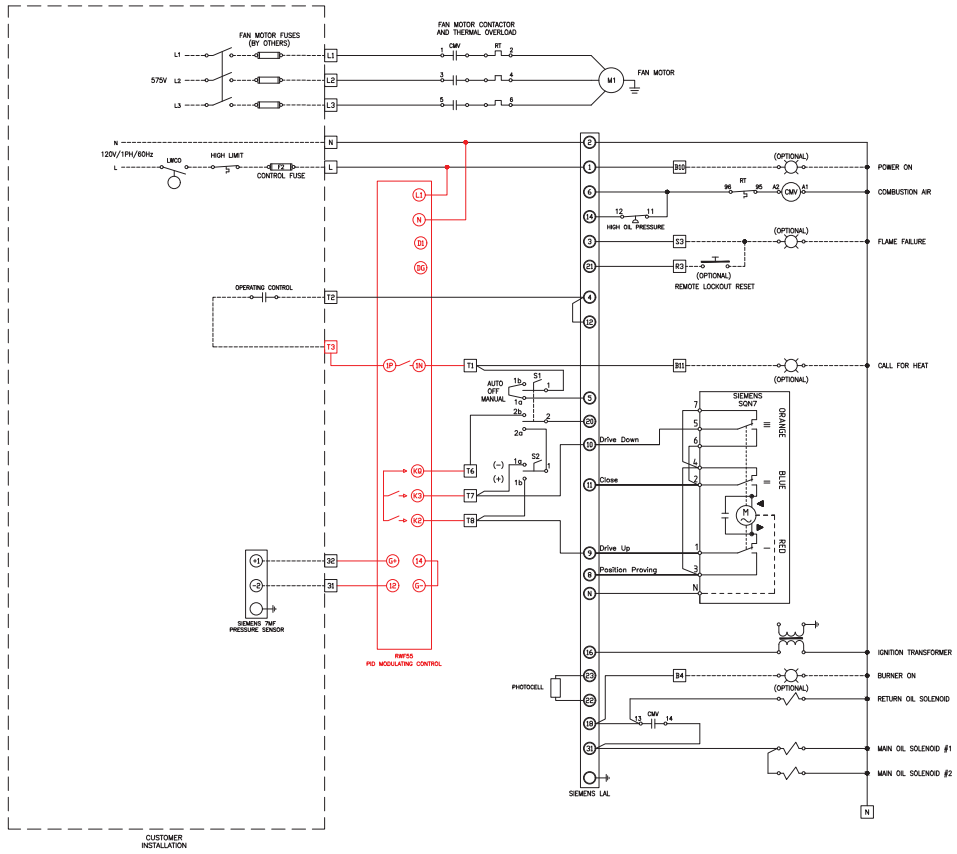

LEGEND:

- X — BURNER PANEL TERMINAL
- (X) — FLAME RELAY TERMINAL
- ——— BURNER WIRING
- - - - - FIELD WIRING

NOTE: USE COPPER CONDUCTORS ONLY

THIS DRAWING CONTAINS PROPRIETARY INFORMATION DISCLOSED BY RIELLO IN CONFIDENCE AND EXCEPT AS MAY OTHERWISE PERMIT IN WRITING, TO BE USED SOLELY FOR THE PURPOSE FOR WHICH IT HAS BEEN PROVIDED BY RIELLO

RIELLO BURNERS NORTH AMERICA
2165 MEADOWPINE BLVD
MISSISSAUGA, ON CANADA L5N 6H6
TEL: 1-800-4-RIELLO FAX: 1-866-2-RIELLO

RBNA#	RBNA-13695
BURNER	RL 50/M

REVISION HISTORY	DATE
AS BUILT	NOV 12 2025
-	-

SCC Inc.

Specifications

Document No. RWF-5510

January 5, 2017

RWF55 Control

Product Description

The RWF55 is a modulating burner/boiler control designed and engineered specifically for burner/boiler applications. The RS-485 Modbus RTU communications port allows the RWF55 control to communicate with a Building Management System (BMS) or function as an integral part of a PLC or BMS based lead/lag boiler room management system.

Sample Specification

1. The control shall have a four character, bright red LED, continuous display of process variable and a four character, bright green LED, continuous display of process setpoint. Either display shall be configurable to show analog input 1, 2, or 3, output, or thermal shock end value.
2. Active Modbus communication shall be indicated by a flashing green LED.
3. Burner enabled indication shall be indicated by a steady green LED.
4. Three-position output status shall be indicated by two orange LED's.
5. Two-stage operation status shall be indicated by an orange LED.
6. Alarm relay activation shall be indicated by a red LED.
7. Active thermal shock protection shall be indicated by an orange LED.
8. The control shall be equipped with an integral 24 VDC/30 mA power supply.
9. The control shall be configurable to accept the following process variable inputs:
    - Pt100, 2-wire or 3-wire
    - Pt1000, 2-wire or 3-wire
    - LG-Ni1000, 2-wire or 3-wire
    - B, J, K, N, R, S, or T-type thermocouples
    - 0-20 mA or 4-20 mA
    - 0-5 VDC, 1-5 VDC, or 0-10 VDC
    - 0-135 Ω

10. The control shall function as a continuously modulating control and provide one of the following selectable output signals:
    - Three-position, floating (bumping)
    - 0-20 mA or 4-20 mA
    - 0-10 VDC
11. The control shall be configurable, via a digital input, to function as either a PID control or two-stage (high/low) control.
12. The control shall provide the burner enable function.
13. The control shall function as a PID control with the following adjustable parameters:
    - Proportional band (Pb.1)
    - Integral action time (rt)
    - Derivative time (dt)
    - Dead band (db)
    - Actuator running time (tt)
14. The control action shall be selectable as either heating (reverse) or cooling (direct).
15. The control shall have a PID “Auto Tune” function that can be enabled to automatically tune the control parameters to the control characteristics of the burner/boiler.
16. The control shall be configurable for one of the following analog input signals to allow remote process setpoint control via BMS or other boiler room management systems:
    - 0-20 mA or 4-20 mA
    - 0-5 VDC, 1-5 VDC, or 0-10 VDC
    - 0-1000 Ω
17. The control shall be programmable with a second setpoint.
18. The control shall be programmable to offset setpoint 1, via digital input contact closure, to provide a dual setpoint.
19. The control shall be programmable with high and low operating limits.
20. The control shall be able to accept either of the following temperature sensing devices to reset the outdoor temperature setpoint:
    - LG-Ni1000, 2-wire
    - Pt1000, 2-wire

21. The control shall allow for time-averaged readings of outdoor temperatures, and configurable parameters for adjusting the slope of the outdoor temperature reset curve.
22. The control shall include adjustable high and low process setpoint limits to prevent the process setpoint from being programmed outside of the defined range by any of the following methods:
    - Manually using a keypad
    - Remotely via the analog process setpoint control input
    - Remotely via Modbus
23. The control shall include thermal shock protection providing configurable field parameters to adjust the slope and tolerance band.
24. Temperature process variables shall be displayed in ˚F or ˚C.
25. The process variable shall be displayed with zero, one, or two digits after the decimal point.
26. The control shall have a manual control feature. The display should alternate between "HAnd" and the output percentage when in manual control mode.
27. The control shall have an intelligent and configurable burner on-off cycle minimizing feature with the following functionality:
    - When demand on the boiler is less than low fire, the control will hold the burner at low fire.
    - When the demand on the boiler increases, the control will release the burner to modulate.
28. The control shall have a configurable alarm relay in relation to any of the analog inputs with the following features:
    - Can be programmed relative to an absolute value, or in relation to the setpoint
    - Configurable to break open or closed
29. The control shall be configurable to retransmit analog input 1, 2, or 3 to the analog output. The analog input can be scaled to produce varying analog outputs.
30. The control shall have three lockable levels of programming access:
    - Configuration menu
    - Parameter and configuration menus
    - Keyboard

31. The control front panel shall be IP66 rated.
32. The control's configuration data shall be stored in EEPROM, ensuring power failure protection.
33. The control shall utilize universal voltage inputs of 110-240 VAC, 48-63 Hz.
34. The control shall have a Modbus communications port with the following features:
    a. Standard RS-485 Modbus RTU communication protocol
    b. Selectable baud rate (4800-38400)
    c. Programmable Modbus address (1-254)
    d. Ability to apply analog inputs 2 and 3 as read only, to perform the following functions:
        i. Input 2 can be connected to a 0-1000 Ω potentiometer, on a firing rate control motor, to transmit the actual firing rate.
        ii. Input 3 can be connected to a temperature sensor to transmit outdoor temperature, boiler water temperature, or stack temperature.
    e. Remote control functions:
        i. Unfiltered, direct reading of analog inputs 1, 2, and 3
        ii. Programmable timer function for fail-safe return to local control, if communications fail
        iii. Burner shutdown capability
        iv. Manual control (floating or analog output)
        v. Control of the alarm relay
35. The control shall return to displaying the process variable and setpoint if none of the buttons on the front panel have been pressed for the duration of a programmable amount of time.
36. The control shall have associated software available to save, adjust, or upload parameter settings.

Technical Specifications

Input Voltage	110-240 VAC (+10/-15%), 48-63 Hz
Power Consumption	Max 20 VA
Operating Temperature	-20 to 50 °C, -4 to 122 °F
Enclosure Rating	IP66 keypad display, rel. humidity <95% (non-condensing)
Aux. DC Power Output	24 VDC, 30 mA
Output Relay Contact Rating	24-240 VAC, 2 A max
Analog Output Rating	0-10 VDC (500 Ω load min), 0-20 mA or 4-20 mA (500 Ω load max)
Modbus RTU Port	Configurable baud rate (4800, 9600, 19200, 38400) Address 1-254
Size	1/8 DIN, 122 mm mounting depth
Data Storage	Non-volatile EEPROM
Approvals	UL, CSA, CE

Front Display Features

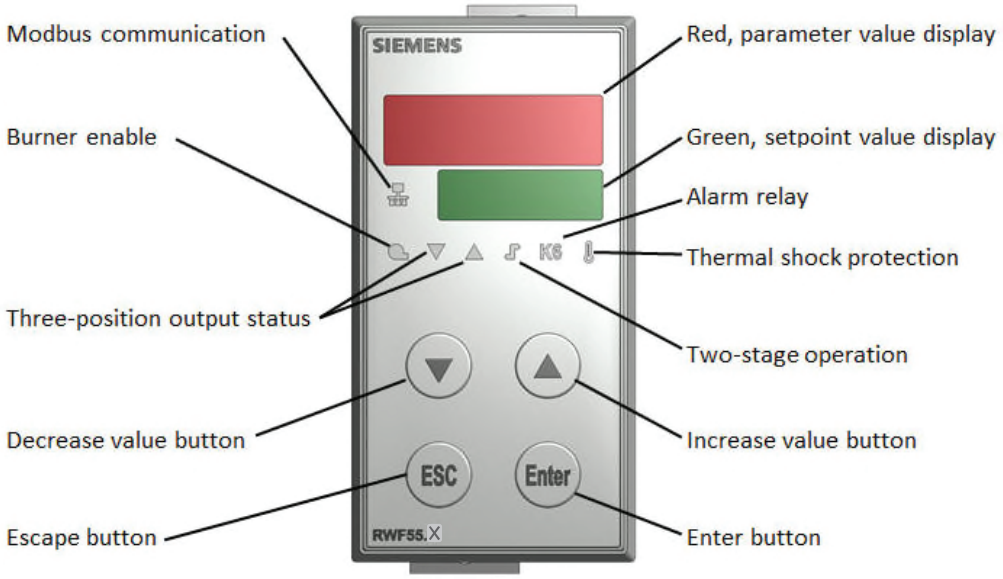

Terminals

Terminal Number	Terminal Group	Terminal Description
11	Analog Input 1	2-wire or 3-wire RTD
12		3-wire RTD Thermocouple (+) Current input signal (+)
13		Voltage input signal (+)
14		2-wire or 3-wire RTD Thermocouple (-) Signal ground (-)
21	Analog Input 2	2-wire RTD Current input signal (+)
22		Voltage input signal (+)
23		2-wire RTD Signal ground (-)
31	Analog Input 3	2-wire RTD
32		2-wire RTD
A+	Analog Output	Signal (+)
A-		Signal (-)
C1	Not Used	Not Used
C2		
C3		
C4		
R+	Modbus	RS-485 (+)
R-		RS-485 (-)
G+	24 VDC Power Supply	Power supply (+)
G-		Power supply (-)
D1	Binary Inputs	Binary input 1
D2		Binary input 2
DG		Binary input common ground
6N	Alarm Relay	NO contact
6P		Common
K3	3-Position Output	NO contact for CLOSE controlling element
KQ		Common
K2		NO contact for OPEN controlling element
1P	Burner Enable	Common
1N		NO contact
N	Main Power	Neutral
L1		Line

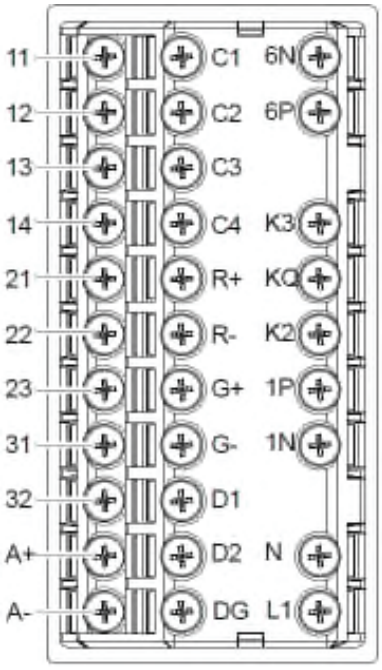

Dimensions

Dimensions in inches; millimeters in brackets

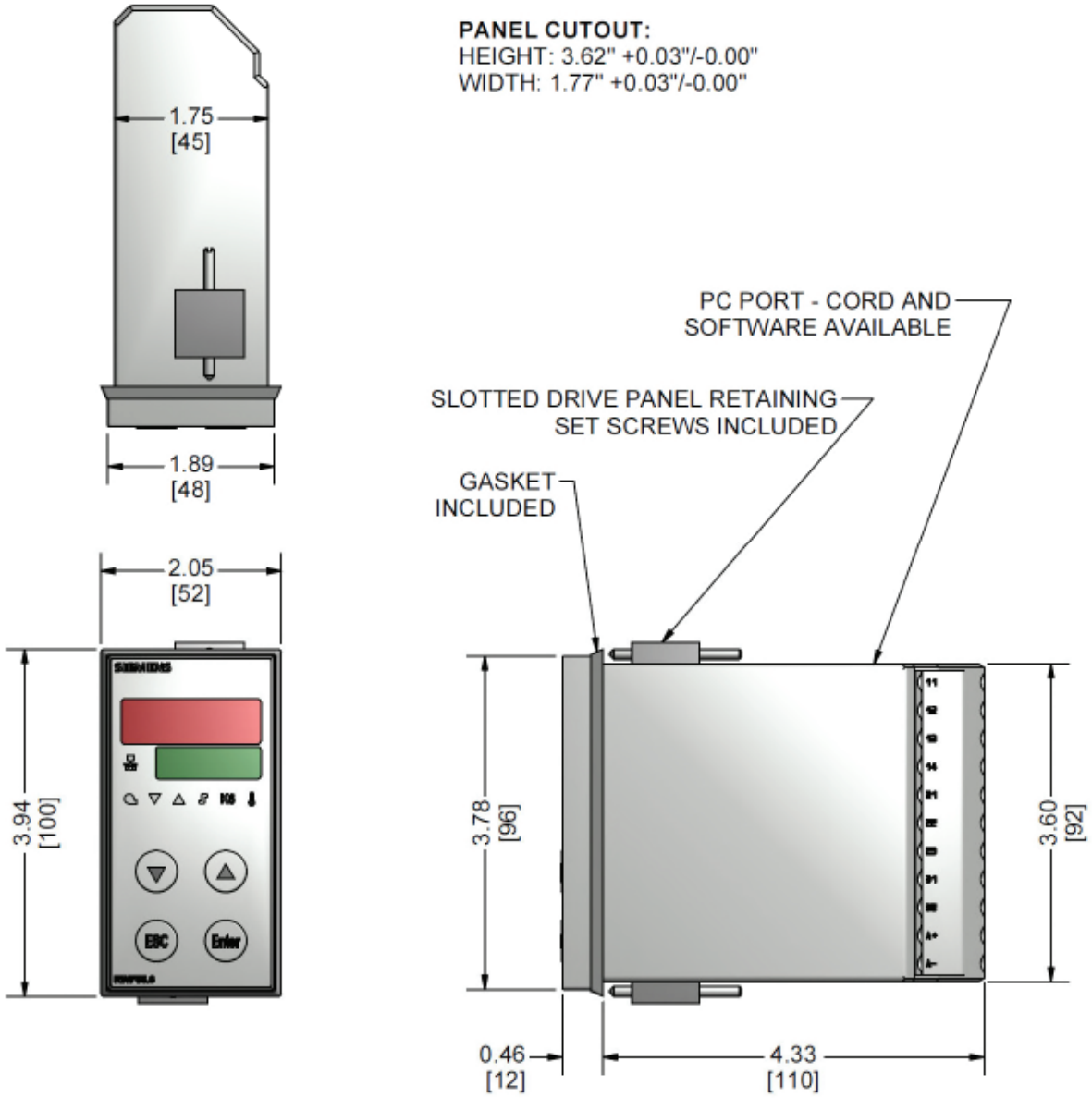

Information in this publication is based on current specifications. The company reserves the right to make changes in specifications and models as design improvements are introduced. Product or company names mentioned herein may be the trademarks of their respective owners. © 2009 SCC Inc.

Low-temperature oil/gas boiler

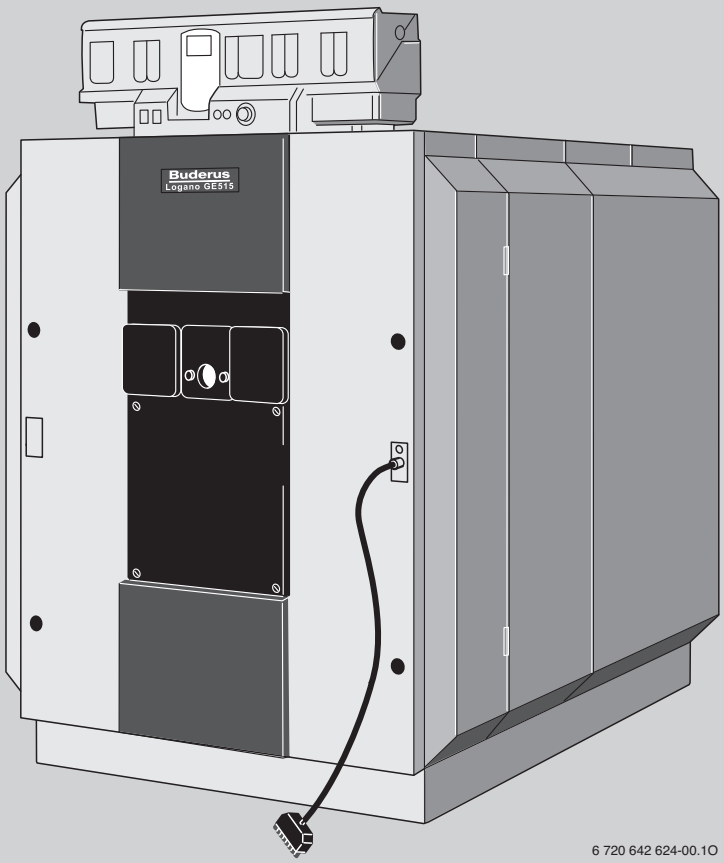

6 720 642 624-00.1O

WARNING: If installation, adjustment, modification, operation or maintenance of the heating system is carried out by an unqualified person, this may result in personal injury or property damage.
The directions of this installation manual must be followed precisely.
If support or additional information is required, contact a qualified service company, service provider or the gas company.

WARNING:
Observe the safety instructions of this installation manual before placing the heating appliance in operation.
The operating manual is a component of the technical documentation and must be handed over to the operator of the heating system. Explain to the owner or operator how to use the heating system using the operating instructions. Make sure that he has been familiarized with all information required for the operation of the heating system..

NOTICE: If the storage tank will be installed in Massachusetts, it must be installed by an installer or dealer who is registered there.

This manual is available in the English and French language.

Please keep this manual for future reference.

Installation and Service Instructions
Logano G515

Boilers for oil/gas-fired power burners

6 720 647 208 (2014/09) US/CA

Read carefully prior to installation and maintenance.

Buderus

About this manual

The appliance conforms to the basic requirements of the relevant directives.
The conformity has been confirmed.
The corresponding documentation and the original Declaration of Conformity are on file with the manufacturer.

This installation and maintenance instructions contain important information for the safe and proper installation, initial start-up and maintenance of the oil/gas-fired boiler Logano G515.

These installation and maintenance instructions are designed for specialists, who, due to their vocational training and experience, are knowledgeable in handling heating systems and oil and gas installations.

The oil/gas-fired boiler Logano G515 is available in two variants (disassembled and assembled).

These installation and maintenance instructions explain the installation and maintenance of both boiler types.

Contents

1 Guideline to symbols and safety instructions 3
1.1 Guideline to symbols 3
1.2 Safety instructions 4

2 Product description 5
2.1 Designated use 6
2.2 Operating conditions 6
2.3 Compliance with standards and regulations 6
2.4 Additional regulations for installations in the Commonwealth of Massachusetts 7

3 Specifications 8

4 Scope of delivery 10
4.1 Logano G515 – Delivery as a pre-assembled block .. 10
4.2 Logano G515 – Delivery in loose sections 10

5 Transporting the boiler 10

6 Positioning the boiler 11
6.1 Tools and auxiliary materials 11
6.1.1 Boiler assembly tool size 2.2 11
6.1.2 Boiler assembly tool size 2.3 (complete in the toolbox) 11
6.2 Recommended wall clearances 12
6.3 Installing the boiler on a boiler base or foundation ... 12

7 Boiler block assembly 13
7.1 Assembly of a boiler block from sections 13
7.2 Joining the boiler block assembly (delivery as loose sections) 14
7.3 Setting up the boiler block – (assembled block) 18
7.4 Inserting the supply pipe (parts crate) 18
7.5 Installing the sensor well 18
7.6 Leak test 19
7.6.1 Carrying out leak test 19
7.6.2 Sealing leaks 19
7.7 Boiler water connections 20
7.8 Installing draft diverter, baffles and burner door 20
7.8.1 Positioning the draft diverter 20
7.8.2 Screwing cleanout cover onto rear section 20
7.8.3 Fitting the burner door 21
7.8.4 Hot gas check plates on front section 21
7.8.5 Insert the flue gas baffle plates 22
7.9 Installation of the boiler jacket 22
7.9.1 Mount the brackets 22
7.9.2 Fitting the profile rails 23
7.9.3 Fitting the thermal insulation 24
7.9.4 Fitting side panels and top covers 27

8 Connecting the boiler on the flue gas side 31
8.1 Fitting the vent pipe sealing collar (accessory) 31
8.2 Installing a flue gas temperature sensor (accessory) . 31

9 Installing the control panel 32
9.1 Installing the control panel 32
9.2 Fitting temperature sensor assembly and burner cable 32

10 Mounting the burner 34

11 System start-up 35
11.1 Filling the system 35
11.2 Commissioning the system 35
11.3 Start up the control panel 35
11.4 Initial burner start-up 35
11.5 Raising flue gas temperature 36
11.5.1 Removing heat exchanger baffles 36
11.5.2 Removing hot gas check plates 36
11.5.3 Increasing the flue gas temperature slightly 36
11.6 Commissioning log 37

12 Shutting down the system 38
12.1 Shutting down the heating system via the control panel 38
12.2 Shutting down the system in an emergency 38

13 System inspection and maintenance 39
13.1 General information 39
13.2 Why is regular maintenance important? 39
13.3 Cleaning the boiler with cleaning brushes 39
13.4 Wet-cleaning the boiler 41
13.5 Checking the operating pressure 41
13.6 Filling with boiler water and purging the system 41
13.7 Inspection and maintenance logs 42

14 Troubleshooting burner faults 45

15 Spare Parts 46

Index 64

Appendix 65

1 Guideline to symbols and safety instructions

1.1 Guideline to symbols

Warnings



Warnings are indicated in the text by a warning triangle and a gray background.

Signal words at the beginning of a warning are used to indicate the type and seriousness of the ensuing risk if measures for minimizing damage are not taken.

- **NOTICE** indicates that damage to property may occur.
- **CAUTION** indicates possible minor to medium personal injury.
- **WARNING** indicates possible severe personal injury.
- **DANGER** indicates a potential for loss of life.

Important Information



Important information neither indicating personal injury nor damage to property are marked with this symbol. They are separated by lines above and below the text.

Additional symbols

Symbol	Explanation
▶	Sequence of steps
→	Cross-reference to other points in this document or to other documents
•	Listing/list entry
–	Listing/list entry (2nd level)

Table 1

1.2 Safety instructions

Danger from failing to consider your own safety in an emergency such as a fire

- Never risk your own life. Your own safety must always take the highest priority.

Risk due to oil leaks

- When using oil as the fuel, national regulations hold the operator responsible for immediately asking a specialist contractor to remedy oil leaks the moment they are discovered.

If you smell gas

- Close the gas shut-off valve.
- If you hear gas escaping, evacuate the affected area immediately.
- Open the windows.
- Do not operate any electrical switches or equipment such as telephones, power plugs and doorbells.
- Extinguish all open flames.
- Do not smoke.
  Do not use lighters.
- Warn all occupants of the building, but do not ring doorbells.
- Call your gas utility company and your local heating contractor **from outside the building.** If necessary, notify police or the fire department.

If you smell flue gas

- Switch OFF the appliance.
- Open windows and doors.
- Inform a trained and certified heating contractor.

Danger of electric shock when the control panel is open

- Always de-energize the connection before working on electrical parts (circuit breaker).
- Take provisions against unintentional reconnection.

Danger of poisoning from flue gas if supply of combustion air is insufficient

- Safeguard supply of combustion air.
- Do not cover or reduce the size of ventilation openings in doors, windows and walls.
- Safeguard sufficient supply of combustion air also for appliances installed at a later date, e.g. kitchen exhaust fans, clothes dryers, and air conditioning units with vent to the outside.
- Never operate the appliance if the supply of combustion air is insufficient.

Combustion air / room air

To prevent corrosion, keep the supply of combustion air / room air free of corrosive substances (e.g. halogenated hydrocarbons that contain chlorine or fluorine compounds).

Danger of explosion of flammable gases

- Only employ a trained and certified contractor to carry out work on the gas train.

Explosive and easily combustible materials

Never use or store easily combustible materials (paper, thinners, paints, etc.) near the appliance.

Installation, conversion

Only have the appliance installed or modified by a trained and certified heating contractor.

Never modify any parts that carry flue gas.

Never close the outlet of safety valves. Water may be expelled from any safety valve during heat-up.

Inspection and maintenance

The operator is responsible for safety and environmental compliance of the heating system.

Sign a maintenance and inspection contract with a trained and certified contractor, covering an annual inspection and demand-dependent maintenance. This guarantees high efficiency and environmentally sound combustion.

Instructing the customer

- Instruct customers about the functions and operation of the appliance.
- Inform the customer that they must not carry out any modifications or repairs.
- Only use the boiler for its intended purpose and only when it is in working order.

Disposal

- Dispose of packaging in an environmentally responsible manner.
- All heating system components that have to be replaced should be disposed of in environmentally-responsible manner at an authorized disposal site.

Other important information

- If the system overheats or the gas supply does not shut off, do not switch off or disconnect the power supply to the pump. Instead, shut off the gas supply somewhere else separate from the heating system.

2 Product description

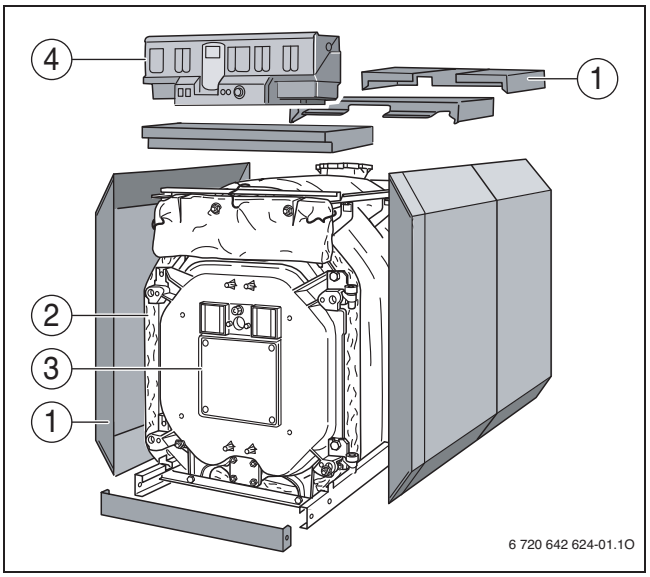

Fig. 1 Oil/gas-fired boiler Logano G515

[1] Boiler shell (jacket)
[2] Thermal insulation
[3] Boiler heat exchanger
[4] Control panel assembly

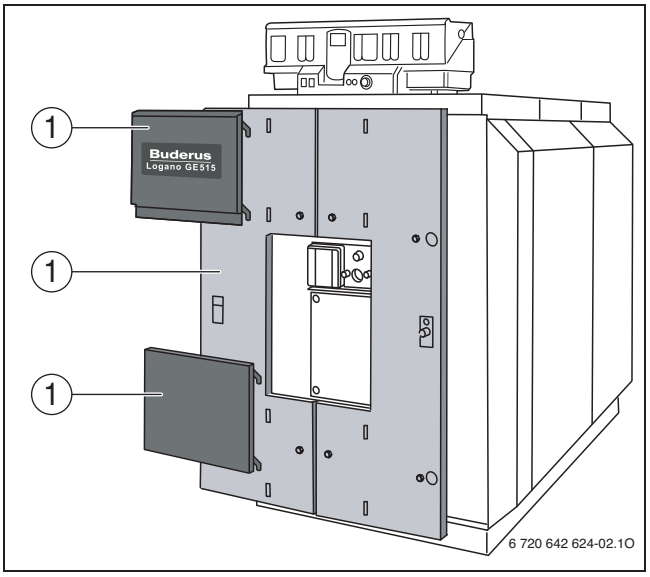

Fig. 2 Front jacket

[1] Boiler shell (jacket)

The Logano G515 oil/gas-fired boiler is supplied with or without a burner You can obtain undrilled or predrilled burner plates (hole pattern depends on burner) as accessories from Buderus.

The predrilled burner plate is included in the scope of delivery for the Logano G515 with oil or gas-fired fan-assisted burners.

NOTICE: Risk of system damage from use of incorrect burner.

- ▶ Only use burners that meet the technical requirements of the oil/gas-fired boiler Logano G515 (→ Chapter 3, page 8).

The main components of the Logano G515 oil/gas-fired boiler are:

- Boiler block (→ Fig. 1, [3]) The boiler heat exchanger transfers the heat generated by the burner to the boiler water.
- Boiler shell (jacket, (→ Fig. 1 [1] and Fig. 2, [1]), thermal insulation (→ Fig. 1, [2]). The boiler jacket and thermal insulation minimize energy loss.
- Control panel (→ Fig. 1, [4]). The control panel is designed to monitor and control all electrical components of the Logano G515 oil/gas-fired boiler.

Observe all standards and guidelines applicable to the installation and operation of the system in your country.
Please observe the information on the boiler rating plate.

To prevent boiler contamination, we recommend installing a dirt trap in the water system.

As a basic rule, flush existing systems before connecting the boiler.
Install a desludging unit in the boiler return to prevent damage to the boiler.

	Fuels		
Logano G515	Heating oil	Liquid propane (LPG)	Natural gas (NG)
Remarks	The Logano G515 boiler can be operated with the specified fuels. Select a burner suitable for use with the fuels specified for the Logano G515 boiler. The output figures shown in the Tab. “Technical Data” are nominal power figures. Carry out maintenance and cleaning procedures annually. Check that the entire system is functioning correctly. Immediately remedy faults. If heating oil is used, shorter maintenance intervals may be necessary depending on the operating time.		

Table 2

2.1 Designated use

The Logano G515 oil/gas-fired boilers have been designed for the heating of water.

The Logano G515 can be operated with oil, gas, and combination burners. For a list of the approved burners, please contact Bosch Thermotechnology Corp.

This boiler can be operated with an aquastat, the Logamatic 4000, and other control systems.

2.2 Operating conditions

Thermostream technology is a unique feature of Buderus cast iron boilers. Return water is preheated and mixed within the boiler before it comes in contact with the heating surface of the combustion chamber. The Thermostream technology ensures there is an even temperature distribution in the boiler and avoids condensate forming within the combustion chamber. This unique feature reduces thermal stress, the main cause of failure of traditional cast iron boilers. The advantage of this technology is the maintenance of the minimum operating temperature of the boiler (→ Tab. 3); this makes the installation of a shunt pump unnecessary. This way, the costs for the pump itself and its power consumption, as well as possible failure costs are saved. The minimum boiler operating temperature as shown in the table below must be reached within 10 minutes and then be maintained while the burner is running.

		Control of all heating zones with Buderus 4000	External controls (BMS) or Aquastat control
Minimum flow rate		none	
Minimum return temperature	°F (°C)	none	
Minimum operating temperature oil boiler[1)]	°F (°C)	122 (50)	
Minimum operating temperature gas boiler[1)]	°F (°C)	122 (50)	140 (60)
Maximum supply temperature	°F (°C)	212[2)]/248[3)] (100[2)]/120[3)])	
Maximum operating pressure	PSI (bar)	87 (6)	
Time constant of the temperature controller	sec	40	
Time constant of the monitor/limiter	sec	40	

Table 3

1) This temperature has to be reached within ten minutes of the burner starting and has to be maintained whilst the burner is firing.

2) The maximum supply temperature is 212 °F (100 °C), if the boiler is operated as hot water boiler.

3) The maximum supply temperature is 248 °F (120 °C), if the boiler is operated as a hot water generator.

This operating condition can be easily achieved by the controls monitoring the boiler temperature and reducing the flow rate through the boiler until the required temperature is reached. This is then maintained by continuing to control flow based on the boiler water temperature. The controls can reduce the flow rate by closing the valves on the mixed heating circuits, modulating the boiler primary pumps or by closing the motorized butterfly valves or by having a motorized valve in the boiler return on a single boiler installation. The Buderus 4000 series control panel can manage this process or it can be completed by the BMS.

If it is not possible for the control panel to regulate the flow sufficiently to meet this operating condition, then a shunt pump circuit must be fitted to avoid the type of thermal stress that all boilers would experience in these conditions. This shunt pump circuit can be controlled either with a Buderus 4000 control panel or with a third-party controller. Failure to ensure that the operating condition is maintained may lead to thermal stress in the boiler and eventual failure of the sections which would be outside the scope of the warranty.

2.3 Compliance with standards and regulations

Installation and operation of the system must comply with all applicable codes, regulations and statutory requirements.

Installation, connection of the fuel supply and flue connector, commissioning, connection of the electrical power supply, servicing and repair may only be carried out by trained and certified heating contractor. Only registered gas fitters may carry out work on the gas train.

The system must be cleaned and serviced once a year. The operation of the complete system must be tested at the same time. Any faults must be corrected immediately.

The design and mode of operation of this boiler comply with the American National Standard ANSI Z21.13/CSA4.9, latest edition for Gas Fired Low Pressure Steam and Hot Water Boilers.

Other confirmed approvals and certifications are indicated by labels on the boiler.

The heat exchanger has been designed and certified in accordance with the ASME Boiler and Vessel Code, Section IV.

Installation of the wall mounted condensing gas boiler must comply with all applicable codes and regulations imposed by the national, Federal or local authorities and bodies. If no specific requirements are defined, in the USA, the latest edition of the National Fuel Gas Code ANSI Z223.1/ NFPA 54 applies. In Canada, installation must comply in all respects with the latest edition of the Installation Code for Gas Burning Appliances and Equipment, CAN/CSA-B.149 and the applicable local regulations and requirements for the appliance category. The relevant authorities and regulatory bodies must be informed before installation starts.

Where required by local regulations, the system must comply with the American Society of Mechanical Engineers Safety Code for Controls and Safety Devices for Automatically Fired Boilers (ASME CSD-1).

The hot water distribution system must comply with all applicable codes and regulations. When replacing an existing boiler, it is important to check the condition of the entire hot water distribution system to ensure safe operation.

In the Commonwealth of Massachusetts, this appliance must be installed by a licensed plumber and gas fitter. Valves external to the boiler must be fitted with T-handles and condensate piping must be installed in accordance with the State Plumbing Code.

2.4 Additional regulations for installations in the Commonwealth of Massachusetts

(a) For all side wall horizontally vented gas fueled equipment installed in every dwelling, building or structure used in whole or in part for residential purposes, including those owned or operated by the Commonwealth and where the side wall exhaust vent termination is less than seven (7) feet above finished grade in the area of the venting, including but not limited to decks and porches, the following requirements shall be satisfied:

- INSTALLATION OF CARBON MONOXIDE DETECTORS. At the time of installation of the side wall horizontal vented gas fueled equipment, the installing plumber or gasfitter shall observe that a hard wired carbon monoxide detector with an alarm and battery back-up is installed on the floor level where the gas equipment is to be installed. In addition, the installing plumber or gasfitter shall observe that a battery operated or hard wired carbon monoxide detector with an alarm is installed on each additional level of the dwelling, building or structure served by the side wall horizontal vented gas fueled equipment. It shall be the responsibility of the property owner to secure the services of qualified licensed professionals for the installation of hard wired carbon monoxide detectors.
  - In the event that the side wall horizontally vented gas fueled equipment is installed in a crawl space or an attic, the hard wired carbon monoxide detector with alarm and battery back-up may be installed on the next adjacent floor level.
  - In the event that the requirements of this subdivision cannot be met at the time of completion of installation, the owner shall have a period of thirty (30) days to comply with the above requirements; provided, however, that during said thirty (30) day period, a battery operated carbon monoxide detector with an alarm shall be installed.
- APPROVED CARBON MONOXIDE DETECTORS. Each carbon monoxide detector as required in accordance with the above provisions shall comply with NPA 720 and be ANSI/UL 2034 listed and IAS certified.
- SIGNAGE. A metal or plastic identification plate shall be permanently mounted to the exterior of the building at a minimum height of eight (8) feet above grade directly in line with the exhaust vent terminal for the horizontally vented gas fueled heating appliance or equipment. The sign shall read, in print size no less than one-half (½) inch in size, “GAS VENT DIRECTLY BELOW. KEEP CLEAR OF ALL OBSTRUCTIONS”.
- INSPECTION. The state or local gas inspector of the side wall horizontally vented gas fueled equipment shall not approve the installation unless, upon inspections, the inspector observes carbon monoxide detectors and signage installed in accordance with the provisions of 248 CRM 5.08(2)(a) 1 through 4.

(b) EXEMPTIONS: The following equipment is exempt from 248 CRM 5.08(2)(a) 1 through 4:

- The equipment listed in Section 10 entitled “Equipment Not Required To Be Vented” in the most current edition of NFPA 54 as adopted by the board; and
- Product Approved side wall horizontally vented gas fueled equipment installed in a room or structure separate from the dwelling, building or structure used in whole or in part for residential purposes.

(c) MANUFACTURERS REQUIREMENTS - GAS EQUIPMENT VENTING SYSTEM REQUIRED. When the manufacturer of Product Approved side wall horizontally mounted gas equipment provides a venting system design or venting system components with the equipment, the instructions provided by the manufacturer for the installation of the equipment and venting shall include:

- Detailed instructions for the installation of the venting system or the venting system components; and
- A complete parts list for the venting system design or venting system.

(d) MANUFACTURERS REQUIREMENTS - GAS EQUIPMENT VENTING SYSTEM NOT PROVIDED. When the manufacturer of Product Approved side wall horizontally vented gas fueled equipment does not provide the parts for the venting of flue gases, but identifies “special venting systems”, the following requirements shall be satisfied by the manufacturer:

- The referenced “special venting systems” shall be included with the appliance or equipment installation instructions; and
- The “special venting systems” shall be Product Approved by the Board, and the instructions for that system shall include a parts list and detailed installation instructions.

(e) A copy of all instructions for all Product Approved side wall horizontally vented gas fueled equipment, all venting instructions, all parts lists for venting instructions, and/or venting design instructions shall remain with the appliance or equipment at the completion of the installation.

3 Specifications

The technical data provides information about the output profile of the Logano G515.

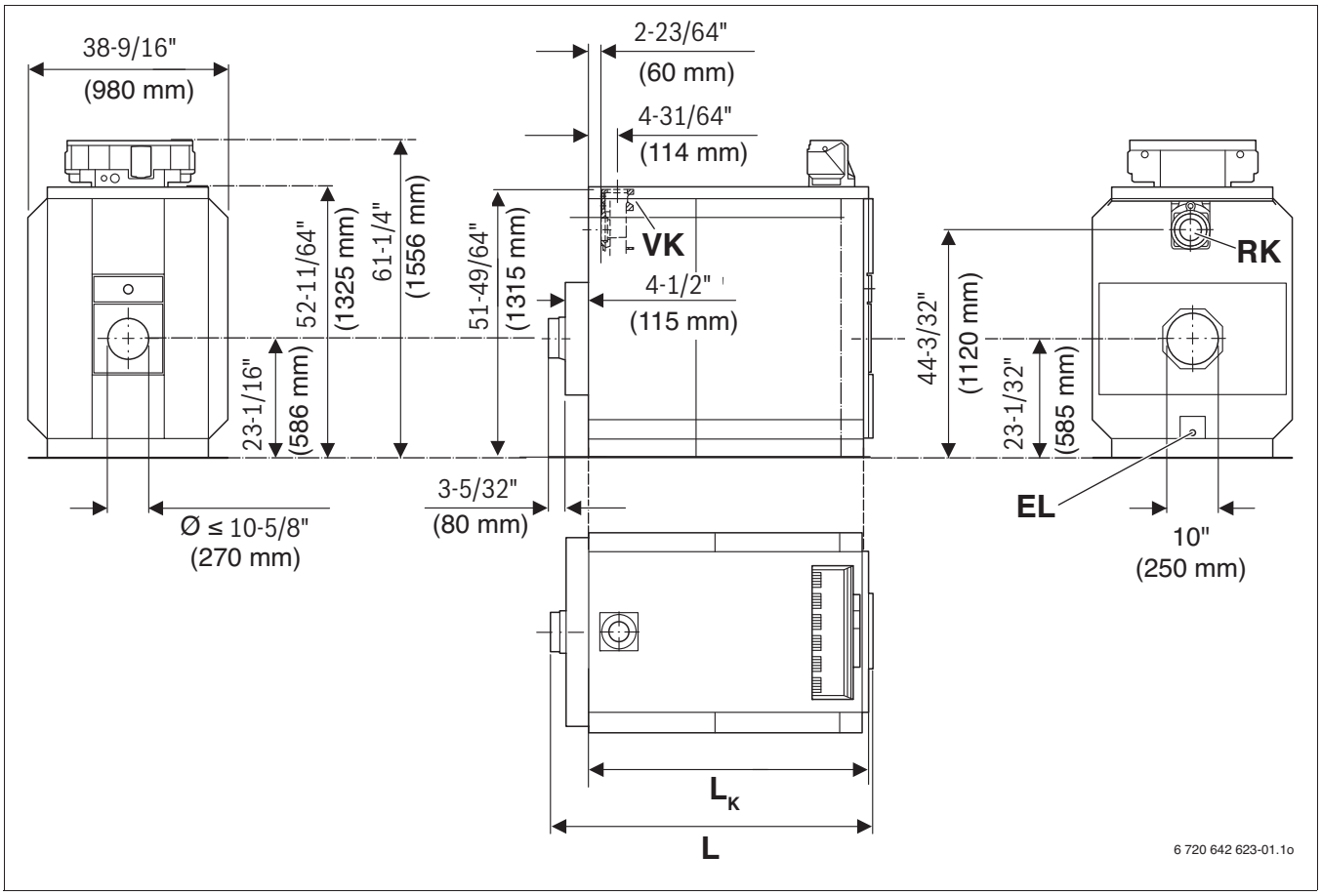

Fig. 3 Technical data for Logano G515 (dimensions in inches (mm))

[EL] Drain valve (Rp ¾)[1)]
[L_K] Boiler heat exchanger length
[L] Overall boiler length
[RK] Return connection on the boiler[2)]
[VK] Supply connection on the boiler[3)]

1) With the drain valve (EL), you may only drain the system, not fill it.
2) The filling of the boiler and the system must be undertaken on a separate connector on the return line.
3) The flange corresponds to the order reduced to 212 (DN100), 176 (DN80) or 149 (DN65).

Logano G515							
Boiler capacity	**Unit**	**240**	**295**	**350**	**400**	**455**	**510**
Number of boiler sections	–	7	8	9	10	11	12
Nominal output	MBH (kW)	685.8 - 818.9 (201 – 240)	822.3 - 1.006.6 (241 – 295)	1.010.0 - 1.194.2 (296 – 350)	1.197.7 - 1.364.9 (351 – 400)	1.368.3 - 1.552.5 (401 – 455)	1.555.9 - 1.74.2 (456 – 510)
Combustion output	MBH (kW)	735.7 - 886.1 (215.6 – 259.7)	879.7 - 1.088.5 (257.8 – 319.0)	1.080.3 - 1.286.7 (316.6 – 377.1)	1.278.2 - 1.465.9 (374.6 – 429.6)	1.461.8 - 1.669.2 (428.4 – 489.2)	1.665.8 - 1.869.2 (488.2 – 547.8)
Boiler overall length (L)	inches (mm)	62 – 7/32 (1580)	68 – 29/32 (1750)	75 – 19/32 (1920)	82 – 9/32 (2090)	88 – 31/32 (2260)	95 – 23/32 (2430)
Boiler block length (L_K)	inches (mm)	53 – 35/64 (1360)	60 – 15/64 (1530)	66 – 59/64 (1700)	73 – 5/8 (1870)	80 – 5/16 (2040)	87 (2210)
Fitting clearance, boiler section (width × height × depth)	inches (mm)	32 7/8 × 51 49/64 × 6 45/64 (835 × 1315 × 170)					
Fitting clearance, boiler block (width × height × length)	inches (mm)	32 7/8 × 51 49/64 × L_K (835 × 1315 × L_K)					
Combustion chamber length	inches (mm)	45 – 55/64 (1165)	52 – 9/16 (1335)	59 – 1/4 (1505)	65 – 15/16 (1675)	72 – 41/64 (1845)	79 – 21/64 (2015)
Combustion chamber diameter	inches (mm)	20 – 17/64 (515)					
Burner door thickness	inches (mm)	5 – 19/32 (142)					
Weight, net[1)]	lb. (kg)	2.80 (1270)	3.153 (1430)	3.506 (1590)	3.865 (1753)	4.189 (1900)	4.542 (2060)
Boiler water content	gal. (l)	68.2 (258)	77.7 (294)	87.2 (330)	96.7 (366)	106.2 (402)	115.7 (438)
Gas capacity	gal. (l)	111.2 (421)	128.6 (487)	145.5 (551)	162.7 (616)	179.9 (681)	196.8 (745)
Flue gas temperature, partial load (60%)	°F (°C)	281 (138)	281 (138)	284 (140)	265 (129)	266 (130)	284 (140)
Flue gas temperature, full load	°F (°C)	328 – 362 (164 – 183)	322 – 362 (161 – 183)	322 – 351 (161 – 177)	315 – 340 (157 – 171)	319 – 342 (159 – 172)	328 – 346 (164 – 174)
Flue gas mass flow rate, oil, partial load (60%)	lb./s (kg/s)	0.143 (0.065)	0.176 (0.080)	0.207 (0.094)	0.238 (0.108)	0.271 (0.123)	0.302 (0.137)
Flue gas mass flow rate oil, full load [2)]	lb./s (kg/s)	0.203 – 0.243 (0.092 – 0.11)	0.241 – 0.298 (0.109 – 0.135)	0.296 – 0.353 (0.134 – 0.16)	0.351 – 0.401 (0.159 – 0.182)	0.401 – 0.459 (0.182 – 0.208)	0.457 – 0.514 (0.207 – 0.233)
Flue gas mass flow rate, gas, partial load (60%)	lb./s (kg/s)	0.143 (0.065)	0.176 (0.080)	00.209 (0.095)	0.238 (0.108)	0.271 (0.123)	0.304 (0.138)
Flue gas mass flow, gas, full load [2)]	lb./s (kg/s)	0.203 – 0.245 (0.092 – 0.111)	0.243 – 0.300 (0.11 – 0.136)	0.298 – 0.355 (0.135 – 0.161)	0.353 – 0.403 (0.16 – 0.183)	0.403 – 0.459 (0.183 – 0.208)	0.459 – 0.233 (0.208 – 0.233)
CO_2 content, oil	%	13					
CO_2 content, gas	%	10					
Required draft	PSI (Pa)	0 (0)					
Flue gas resistance	PSI (mbar)	– (0.5 – 0.6)	– (1.0 – 1.4)	– (1.1 – 1.6)	– (2.1 – 2.9)	– (2.5 – 3.3)	– (2.4 – 3.1)

Table 4

Logano G515							
Boiler capacity	**Unit**	**240**	**295**	**350**	**400**	**455**	**510**
Maximum permissible supply temperature[3)]	°F (°C)	248 (120)					
Maximum permissible operating pressure	PSI (bar)	87 (6)					
		C SA® US					

Table 4

1) Weight with packaging approx. 6–8% higher.
2) The details relate to the upper and lower rated output range.
3) Safety limit (high limit safety cut-out). Maximum possible supply temperature = safety limit (STB) – 32 °F (–18 K).
Example: Safety limit (STB): = 212 °F (100 °C), max. possible supply temperature = 212–32 = 180 °F (100–18 = 82 °C).

4 Scope of delivery

The Logano G515 can be delivered either as a pre-assembled block or in loose sections.

- ▶ Check that the packaging is undamaged on delivery.
- ▶ Check that the delivery is complete.

4.1 Logano G515 – Delivery as a pre-assembled block

Component	Qty	Packaging
Boiler block with burner door and draft diverter	1	Pallet
Assembly components (longitudinal rails and supply pipe)	1	Box
Jacket Pack A, B, C (according to boiler rating)	1 – 3	Cartons
Thermal insulation	1	PU bag

Table 5

4.2 Logano G515 – Delivery in loose sections

Component	Qty	Packaging
Front and rear section as well as burner door	1	Pallet
Intermediate sections – (depending on boiler size)	1 – 2	Pallet
Fittings	1	Box
Exhaust manifold	1	Box
Tie rods	1	bundle
Assembly components (longitudinal rails and supply pipe)	1	Box
Jacket Pack A, B, C (according to boiler rating)	1 – 3	Cartons
Thermal insulation	1	PU bag

Table 6

5 Transporting the boiler

Use suitable equipment to transport the individual boiler sections (delivery as loose sections) and other individual parts.

WARNING: Risk of injury from improperly secured boiler sections.
- ▶ Use only suitable means of transportation when handling the boiler sections, e.g. a heavy duty hand truck.
- ▶ Secure the individual boiler sections to prevent them from sliding off during transport.

NOTICE: Risk of system damage from impacts.
- ▶ The standard delivery of the Logano G515 oil/gas-fired boiler contains components that are sensitive to shock.
- ▶ During handling protect all electronic and other components against impact.
- ▶ Please observe the transport instructions on the packaging.

NOTICE: Risk of system damage from contamination.
- ▶ If you intend to keep the boiler in storage once it has been assembled, observe the following:
- ▶ Protect the boiler connections against contamination by sealing them off or covering them.

Dispose of packaging in an environmentally responsible manner.

6 Positioning the boiler

This chapter describes how to properly position the Logano G515.

NOTICE: Risk of system damage from freezing.
▶ Install the system in a room free from the danger of freezing.

6.1 Tools and auxiliary materials

The following tools and auxiliary materials are required for the boiler assembly (the listed items must be provided by the installer):

- Boiler assembly tool 2.2 (→ Fig. 4, page 11) or 2.3 (→ Fig. 5, page 11)
- Boiler block support for fitting the boiler sections together
- Steel hammer and wooden or rubber mallet
- Half-round bastard file
- Screwdriver (Philips and flat head)
- Flat chisel
- Metric wrenches
- Support wedge, flat iron
- Cleaning rags and cloth
- Fine emery cloth
- Wire brush
- 3-in-1 oil
- Solvent (gasoline, mineral spirits)
- Spirit level, tape measure, chalk, straight edge
- Blanking flange with vent facility (for pressure test)

6.1.1 Boiler assembly tool size 2.2

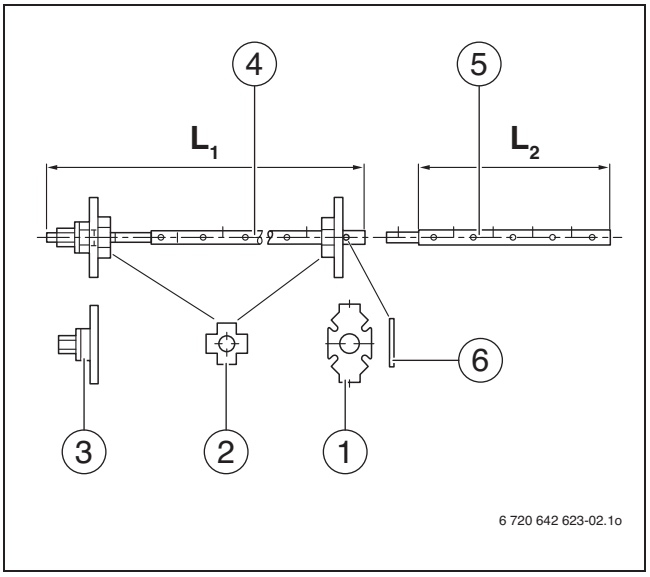

Fig. 4 Boiler assembly tool size 2.2

[1] Mating flange
[2] Additional flange
[3] Compression unit
[4] Tie rod
[5] Extension
[6] Dowel pin (size 2.2)
[L_1] 85" (2160 mm)
[L_2] 23 – 5/8" (600 mm)

Boiler sections	Assembly tool(s) per boiler hub	Extension piece per boiler hub	Length (total) in inches (mm)
7 – 10	1	0	85 – 3/64 (2160)
11 – 12	1	1	108 – 21/32 (2760)

Table 7

For the correct arrangement of the flange during assembly, refer to page 17.

6.1.2 Boiler assembly tool size 2.3 (complete in the toolbox)

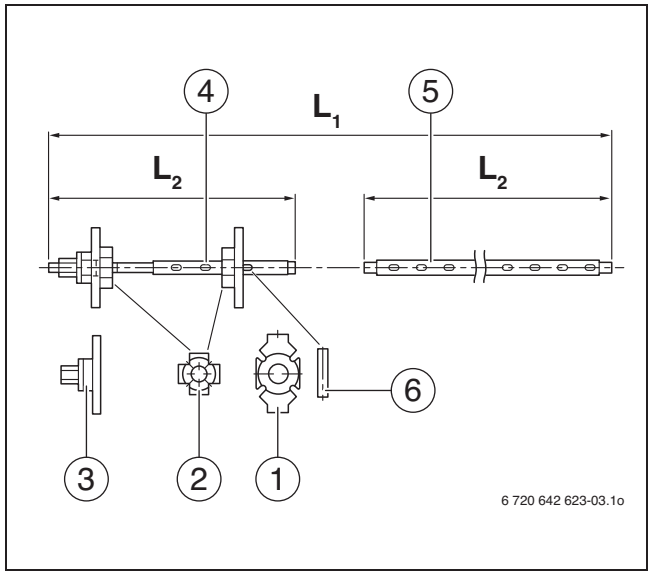

Fig. 5 Boiler assembly tool size 2.3

[1] Mating flange
[2] Additional flange
[3] Compression unit
[4] Tie rod
[5] Extension
[6] Wedge (size 2.3)
[L_1] 121– 1/4" (3080 mm)
[L_2] 31 – 1/2" (800 mm)

Boiler sections	Assembly tool(s) per boiler hub	Extension piece per boiler hub	Length (total) in inches (mm)
7 – 12	1	3	121 – 1/4 (3080)

Table 8

For the correct arrangement of the flange during assembly, refer to page 17.

6.2 Recommended wall clearances

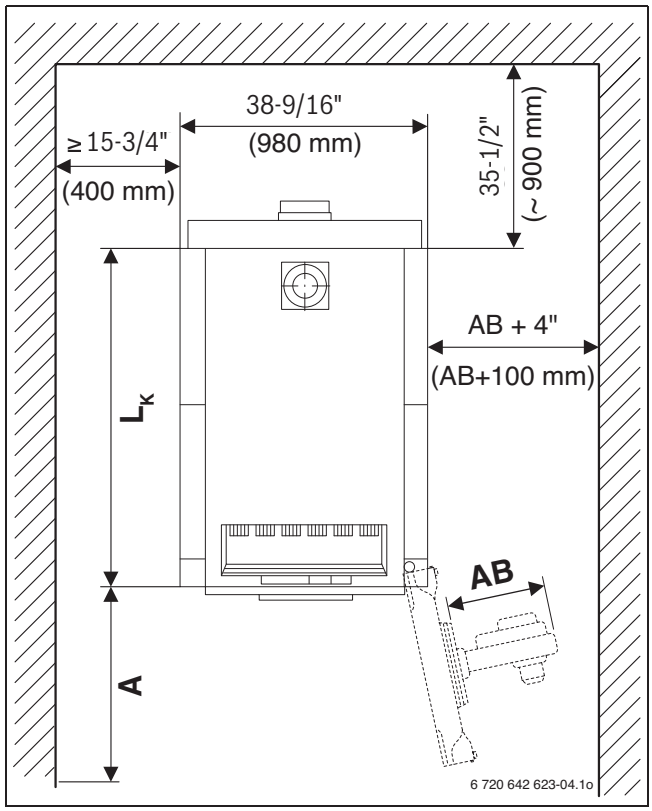

Fig. 6 Installation room with boiler

Observe the recommended wall clearances for complete opening of the burner door, for boiler installation and for cleaning and maintenance (→ Fig. 6 and Tab. 9).

The burner door can be right or left hung/opening (the boiler is always supplied with the door attached on the right).

When installing your boiler maintain the recommended minimum dimensions. Select the recommended clearances between wall and boiler for easy access for installation, maintenance and service work.

The wall clearance on the hinge side must be at least the burner projection (AB). A distance of AB + 3 – 15/16" (AB + 100 mm) from the wall is recommended.

Boiler capacity		Clearance A in inches (mm)	
MBH (kW)	Boiler sections	Recommended	minimum
819 – 1.194 (240 – 350)	7 – 9	66 –15/16" (1700)	39 – 3/8" (1000)
1,365 – 1,740 (400 – 510)	10 – 12	86 – 39/64" (2200)	39 – 3/8" (1000)

Table 9

If you do not observe the recommended minimum clearance (→ Fig. 6), you will not be able to use the cleaning kit (accessory). Alternatively, shorter cleaning devices or wet cleaning may be used. Alternatively shorter cleaning devices or wet cleaning may be used.

6.3 Installing the boiler on a boiler base or foundation

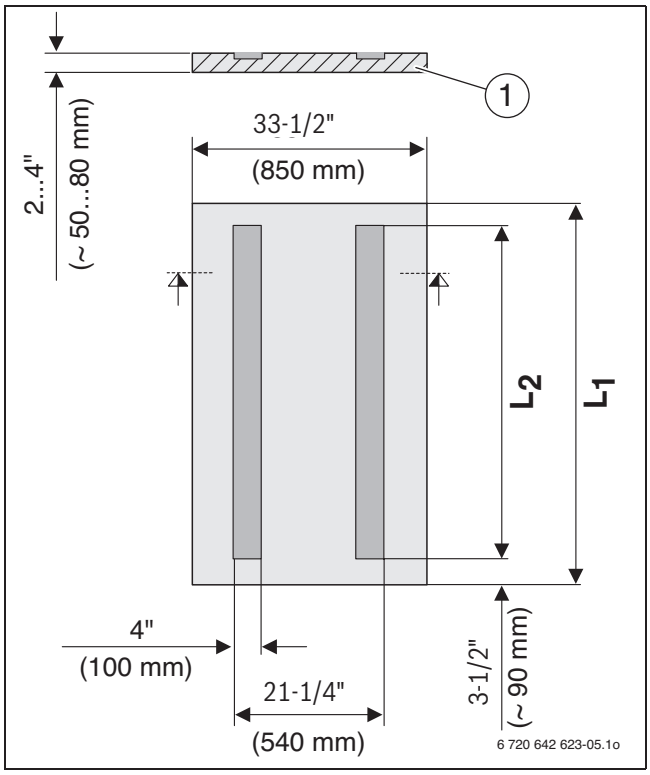

Fig. 7 Base dimensions (dimensions in inches (mm))

A silencing boiler base is available as an accessory from Buderus.

If this boiler base is not used, a concrete foundation can be constructed on-site. When building the base, a
3 – 15/16 × 1 – 31/32 × 5/16 inches (100 × 50 × 8 mm) steel angle or 3 – 15/16 × 13/64 inches (100 × 5 mm) steel flat should be incorporated, to ensure that the boiler sections can slide when the boiler is installed (→ Fig. 7 and Tab. 10).

When building the bases, consider to which side the burner swings out (left or right-hand burner door stop (→ Fig. 6, page 12).

It is advisable to place the boiler on a 2 – 4 inch (50 – 80 mm) tall base (→ Fig. 7, [1]). The installation area must be completely flat and level. The front edge of the boiler should be flush with the edge of the base.

Number of boiler sections	L1 (base) in inch (mm)	L2 (steel section) in inch (mm)
7	53 – 35/64 (1360)	46 – 27/32 (1190)
8	60 – 15/64 (1530)	53 – 35/64 (1360)
9	66 – 59/64 (1700)	60 – 15/64 (1530)
10	73 – 5/8 (1870)	66 – 59/64 (1700)
11	80 – 5/16 (2040)	73 – 5/8 (1870)
12	87 (2210)	80 – 5/16 (2040)

Table 10

7 Boiler block assembly

WARNING: Risk of injury from improperly secured boiler sections.
- ▶ Use only suitable means of transportation when handling the boiler sections, e.g. a heavy duty hand truck with strap or a heavy duty hand truck.
- ▶ Secure the individual boiler sections to prevent them from sliding off during transport.

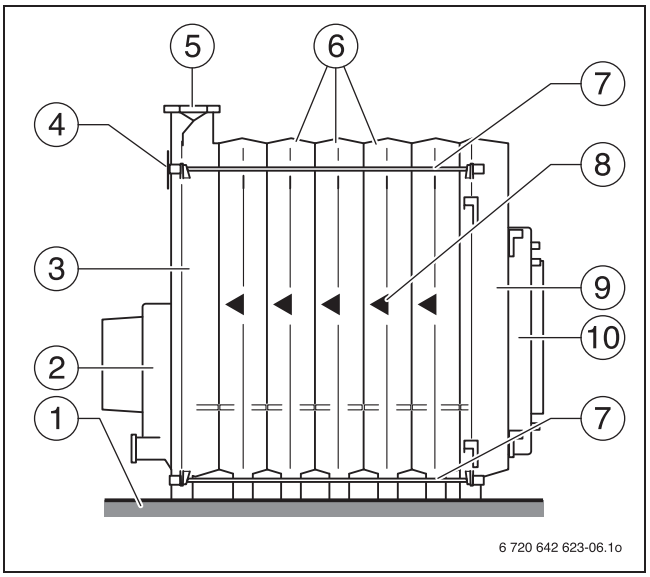

Fig. 8 Boiler heat exchanger

[1] Boiler base or foundation
[2] Exhaust manifold
[3] Rear section
[4] Return connection
[5] Supply connection
[6] Intermediate section
[7] Tie rod
[8] Sequence of installation
[9] Front section
[10] Burner door with burner plate

Depending on the type of delivery, we distinguish between delivery as disassembled sections and as ready assembled block. When delivered as a block, the boiler sections are already fully assembled and checked for leaks prior to delivery. If the assembled boiler is too large or too heavy to be brought to its final installation location in the building, delivery of the disassembled boiler in sections offers a solution.

For the further installation of a pre-assembled boiler block, see Chapter 7.3, page 18.

7.1 Assembly of a boiler block from sections

WARNING: Risk of injury from inadequately secured boiler sections.
- ▶ Secure boiler sections during assembly and take measures to prevent them from tipping over. The installation aid (accessory) is available from Buderus on request.

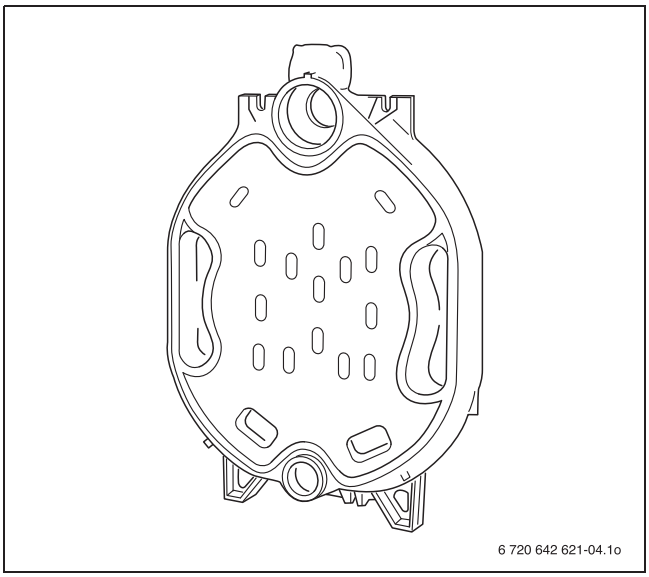

Fig. 9 Rear section

The boiler block is always installed starting from the rear with the rear section (→ Fig. 8, [3], page 13) and working toward the front. The front section (→ Fig. 8, [9], page 13) is always fitted last.

Observe the directional arrows (→ Fig. 8, [8]) during assembly and carry this out in accordance with the following instructions and illustrations.

7.2 Joining the boiler block assembly (delivery as loose sections)

Remove nuts and washers from the studs on the hubs of the boiler sections before attaching the rear section and front section.

If you are using the installation aid, you will need to remove the cleaning access cover before you can attach it to the rear section.

- Unscrew cleanout cover on rear section (→ Fig. 10, [1 and 2]).

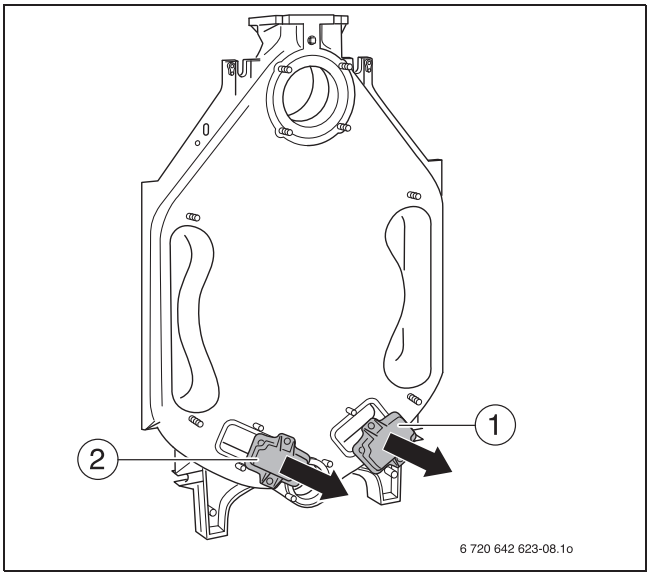

Fig. 10 Removing the cleanout cover.

- Set up the rear section and secure with the installation aid to prevent it from tipping (→ Fig. 11 and Fig. 9 and separate installation instructions for installation aid).

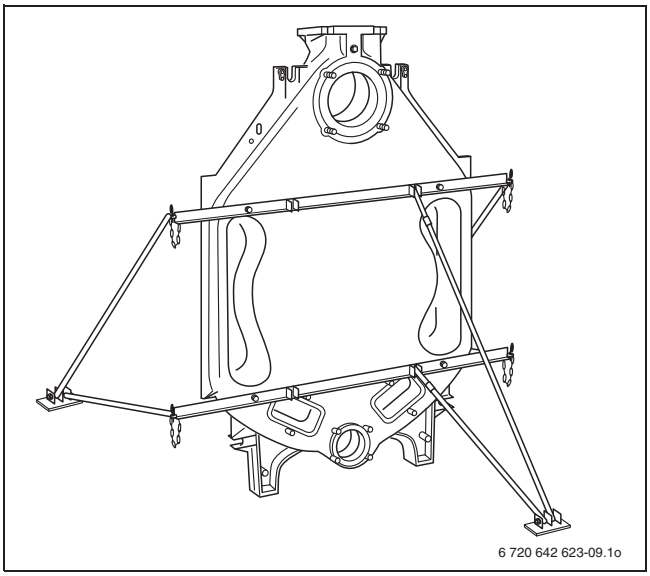

Fig. 11 Fastening the installation aid

- File down any burrs on the hubs (→ Fig. 12).
- Clean the packing grooves where required using a wire brush and cloth (→ Fig. 13, [3]).

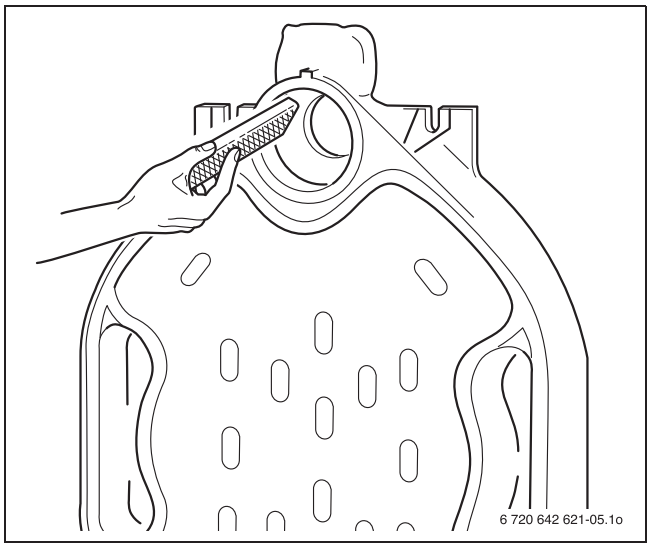

Fig. 12 Remove burrs

WARNING: Danger of fire from combustible cleaning agents.
- When using solvents, avoid open flames, ambers, and sparks.
- Please observe the safety instructions regarding any solvents used.

- Clean the hub sealing faces (→ Fig. 13, [1 and 2]) with a rag soaked in solvents or gasoline.

WARNING: Health hazard from noxious vapors released during material handling.
- Ensure adequate ventilation of the installation area.
- Please note the handling and safety instructions of the product used.

- Evenly coat the hub sealing faces with sealant.

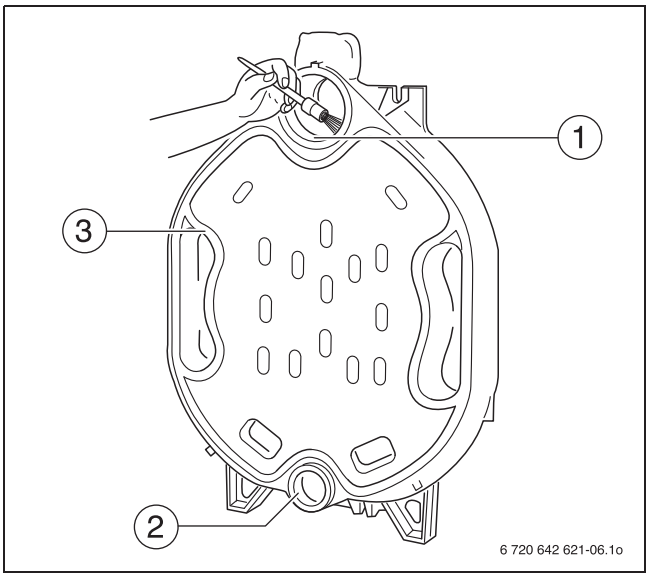

Fig. 13 Prepare packing grooves and hubs

The next step involves preparing the nipples that will eventually seal the boiler sections.

- ▶ Clean nipple with a rag soaked in solvents or gasoline and coat evenly with sealant.
- ▶ Insert the nipple straight into the upper (Sz. 4.181.70) and lower (Sz. 1, 82/50) hub of the rear section and pound home securely with alternate heavy blows. Once pounded in, the upper nipple (→ Fig. 14, [1]) must protrude approx. 1 – 49/64 inches (45 mm) and the lower nipple approx. 1 – 3/8 inches (35 mm) out of the corresponding hubs.
- ▶ Remove any burrs with a file.

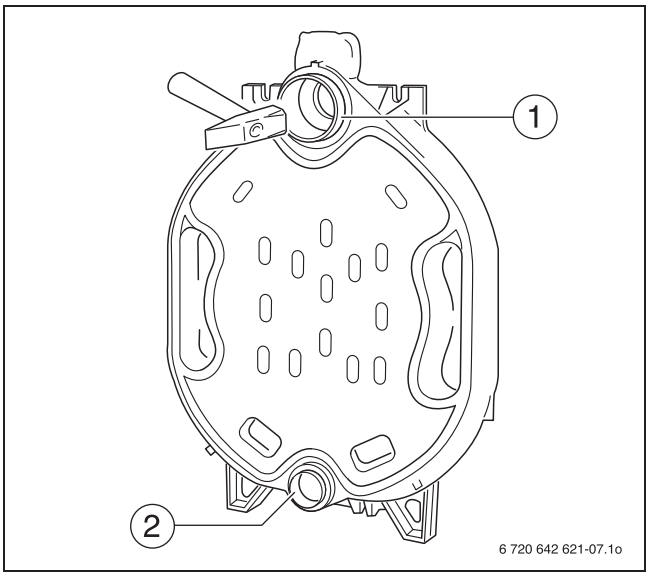

Fig. 14 Driving nipples home

The packing grooves (→ Fig. 15, [1]) must be clean and dry to enable the sealant rope to adhere properly.

- ▶ Coat the packing grooves with adhesive (primer)

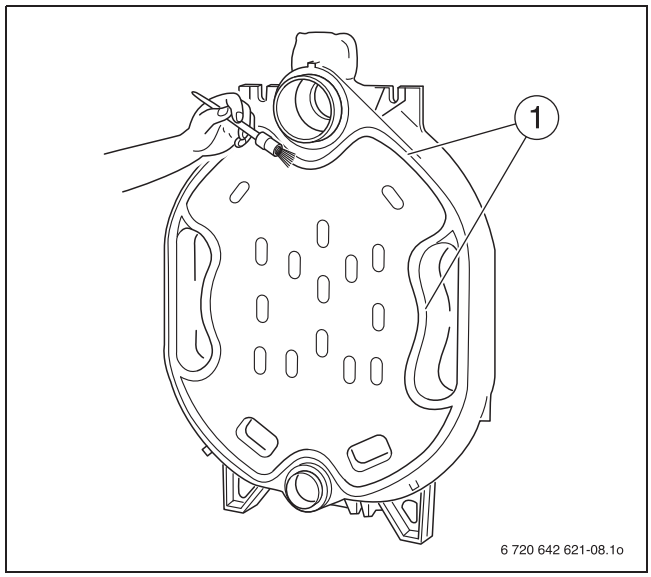

Fig. 15 Coat the packing grooves with adhesive (primer)

- ▶ Insert the flexible sealant rope (→ Fig. 16, [2]) on the front of the rear section, starting around the upper hub, into the packing grooves (→ Fig. 16, [1]) and press in lightly. At the butt joints, overlap the sealant rope by approx. 3/4" (20 mm) and press firmly together.
- ▶ Unroll the required length of sealant rope from the spool supplied.
- ▶ Peel the backing paper from the sealant rope when inserting into the packing groove (do not stretch).

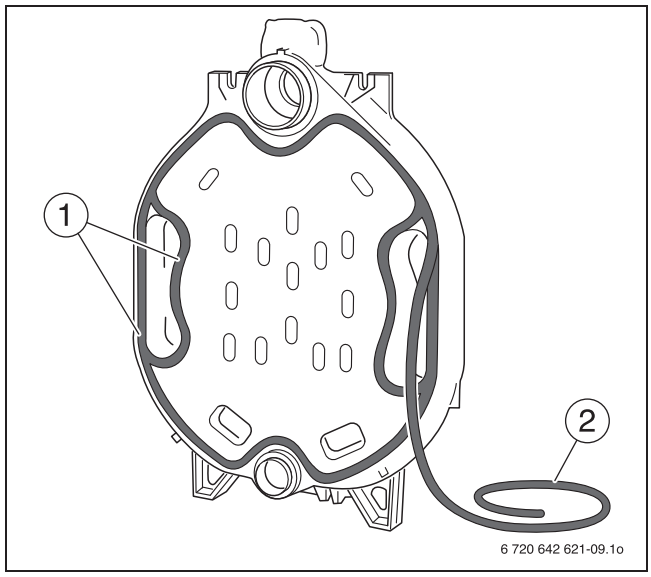

Fig. 16 Inserting sealant rope

Preparation of the first intermediate section:

- ▶ File down any burrs on the hubs (→ Fig. 12, page 14).

The packing springs must be clean and dry. Clean if necessary.

- ▶ Clean the hub sealing faces with a rag soaked in solvents or gasoline.
- ▶ Evenly coat the hub sealing faces with sealant (→ Fig. 17, [1]).
- ▶ Coat the packing springs with primer (→ Fig. 17, [2]).

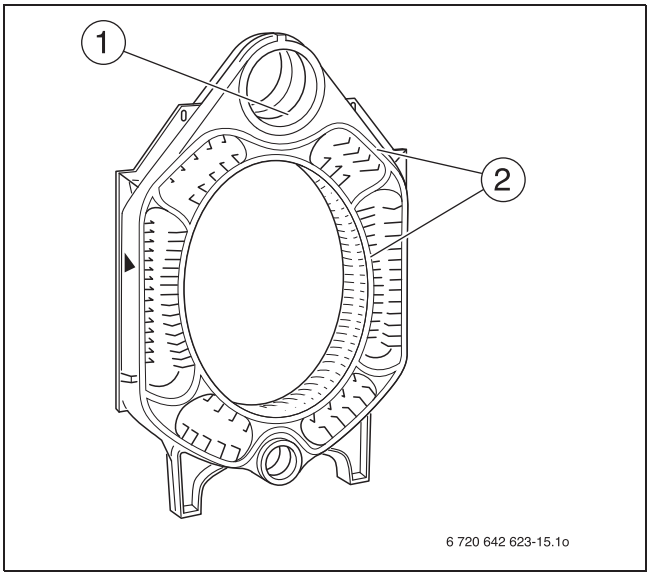

Fig. 17 Preparing the intermediate section

To make installation easier, place the boiler section to be fitted onto the nipple on the upper hub first. Once this has been done, the boiler section can be aligned with the lower hub.

The directional arrow (→ Fig. 18, [3]) must point toward the rear.

- ▶ Position the intermediate section so that the upper and lower hubs (→ Fig. 18, [2 and 4]) fit onto the nipples in the rear section.
- ▶ Drive first intermediate section onto the rear section using a wooden or a rubber mallet (→ Fig. 18, [1]).

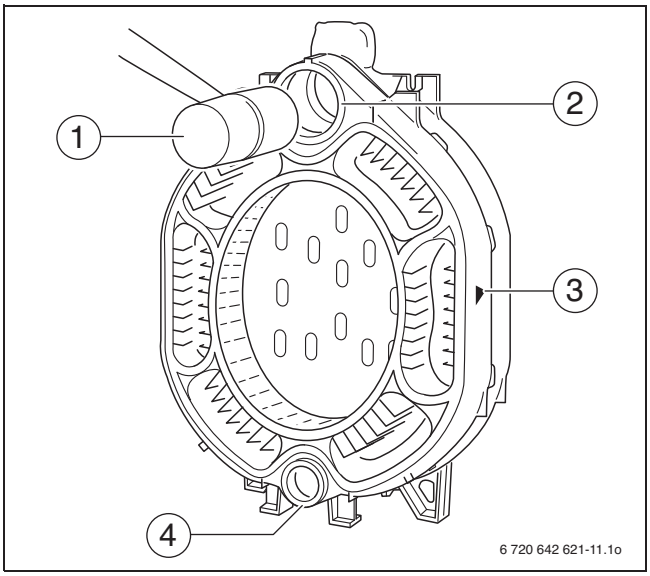

Fig. 18 Pound intermediate section in place

Before the nipples are inserted in the next intermediate section, the part-assembled boiler block must be compressed using the boiler assembly tool.

NOTICE: The boiler can be damaged by pulling the boiler sections together incorrectly or from excessive compression.

- ▶ Ensure that the nipples are positioned straight in the boiler hubs after being pounded in and that they have not been compromised.
- ▶ Never compress more than one nipple joint at a time.
- ▶ Stop compressing the sections when the boiler hubs meet.

NOTICE: Assembly tool damage from loose screw connections of the tie rods.

- ▶ Always check the tie rods before each use and retighten as necessary. The tie rod is correctly positioned if it is fully inserted and no threads are showing (→ Fig. 19, [2]).
- ▶ Always keep the threads (→ Fig. 19, [1]) clean. Dirty threads may damage the assembly tool during assembly.

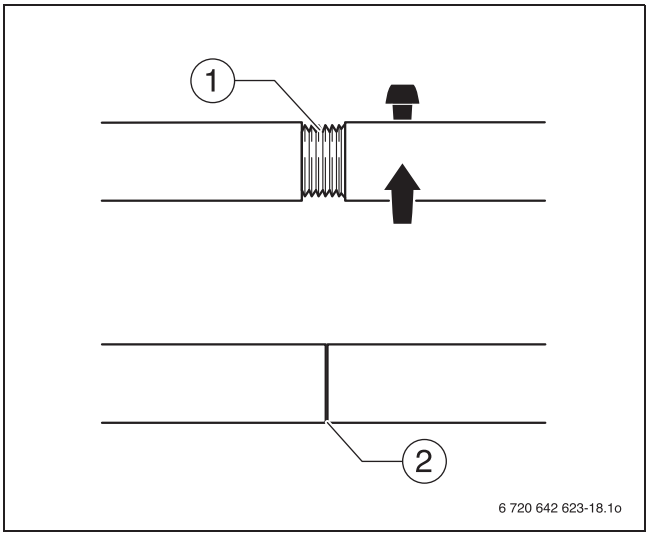

Fig. 19 Boiler assembly tool 2.3

CAUTION: Danger of accident from material fatigue. Improperly used or poorly maintained assembly tools may fail.

- ▶ Never work directly in front of the assembly tool while it is being tensioned.
- ▶ Ensure that no one is standing in front of the assembly tool.

Use a size 2.2 or 2.3 boiler assembly tool (→ Fig. 4, Fig. 5 and Fig. 20 [1 and 2]).

- ▶ Push pressure flanges (→ Fig. 20, [3]) with clamping nuts onto the tie rods (→ Fig. 4, page 11 and Fig. 5, [4]).
- ▶ Push a tie rod through the upper and lower hubs on the boiler.
- ▶ Push mating flanges onto the tie rods and secure each with wedge (dowel pin for assembly tool 2.2).
- ▶ Hold the tie rod in the center of the boiler hubs and slightly draw together the assembly tools using the clamping nut.
- ▶ Place ratchet wrench onto clamping nuts and compress boiler sections by tightening evenly.

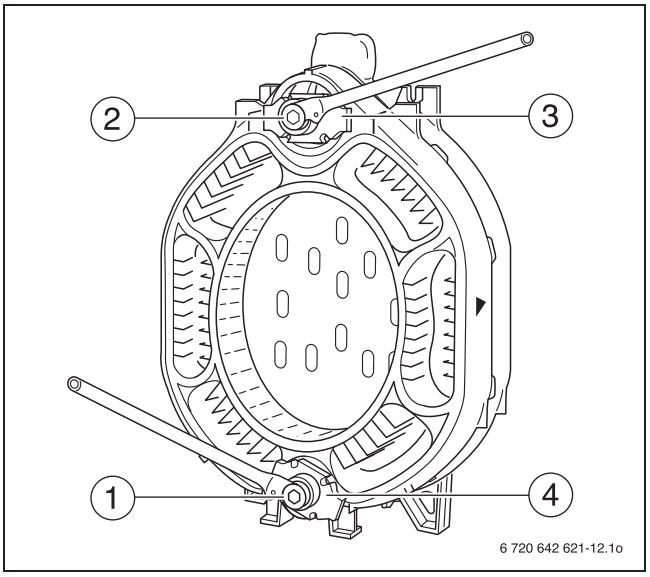

Fig. 20 Using the boiler assembly tool

- ▶ Release and remove the boiler assembly tool.
- ▶ Check nipples are seated correctly.

WARNING: Risk of injury from falling boiler sections.
- ▶ Remove the installation aid first if the partly-assembled boiler consists of at least three boiler sections.

Fig. 21 shows the rear section with intermediate section fitted. The preparations for fitting the next intermediate section have also been made.

The boiler section has been equipped with foot wedges for ease of installation (→ Fig. 21, [1]).

The boiler section foot wedges are also used later for final leveling of the boiler block.

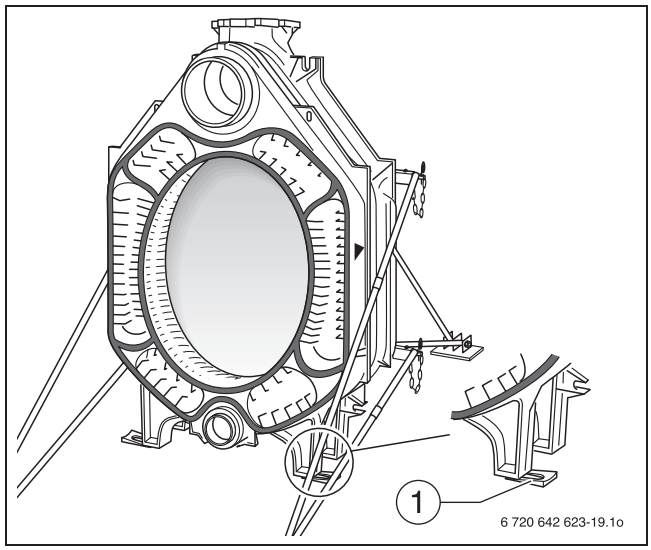

Fig. 21 Using the boiler section foot wedges

Assemble all other boiler sections as described. The front section is fitted last.

After the front section is installed, loosen the assembly tool – but do not remove it. Fit the tie rods first.

- ▶ Insert the tie rods (with spring packs fitted) into the cast lugs on the top left and right, and bottom left and right, next to the boiler hubs (→ Fig. 22, [1 to 4]).

NOTICE: Damage to system through excessively low contact pressure.
- ▶ Do not compress the spring pack. Only use the spring pack in its original state.

- ▶ Tighten the nuts hand-tight.
- ▶ Tighten the nuts on the tie rods 1 to 1½ turns.
- ▶ Level the boiler block vertically and horizontally on the base/ foundation (→ see Chapter 6, page 11).
- ▶ Remove boiler assembly tool.

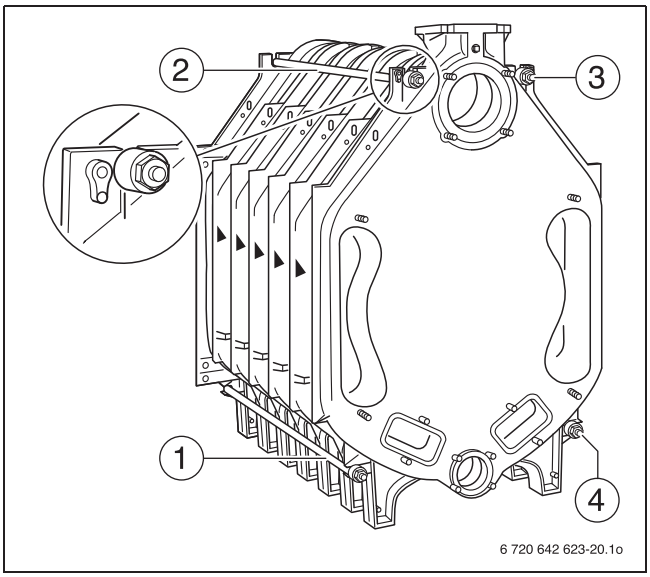

Fig. 22 Fitting the tie rods

The next step describes the installation of the supply pipe (→ Chapter 7.4, page 18).

7.3 Setting up the boiler block – (assembled block)

DANGER: Risk of fatal injury from falling objects.
- ▶ Provide a suitable means of supporting the load.
- ▶ Observe all locally applicable occupational health & safety regulations regarding lifting equipment.

- ▶ Cut the straps (→ Fig. 23, [1]).
- ▶ Remove the pallet prior to positioning the boiler block (→ Fig. 23, [2]).

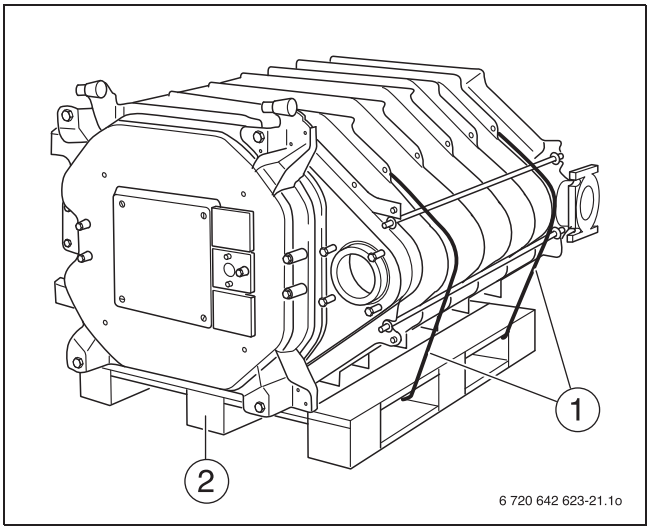

Fig. 23 Boiler block on pallet

- ▶ Level the boiler block vertically and horizontally on the base/impact sound-absorbing base (→ Chapter 6.3, page 12). Use the boiler section foot wedges provided for this purpose.

The following pages describe the installation of the supply pipe and sensor well. You must do both irrespective of whether the boiler is supplied pre-assembled or in separate sections.

7.4 Inserting the supply pipe (parts crate)

The supply pipe (→ Fig. 24, [4]) consists of 2 pieces for boilers with 10 – 12 boiler sections.

- ▶ Push the flat gasket over the supply pipe (→ Fig. 24, [1]).
- ▶ Push the supply pipe from the front into the top boiler hub.
- ▶ Close off with flange cover (→ Fig. 24, [2]).

The supply pipe must be fixed in such a way that the holes on the supply pipe are positioned at the correct angle. This ensures optimum distribution of water in the area of the top boiler hub (Thermostream principle).
- ▶ Make sure that the cam [3] on the end plate of the supply pipe (→ Fig. 24, [3]) fits in the notch in the top boiler hub (→ Fig 24, [5]).

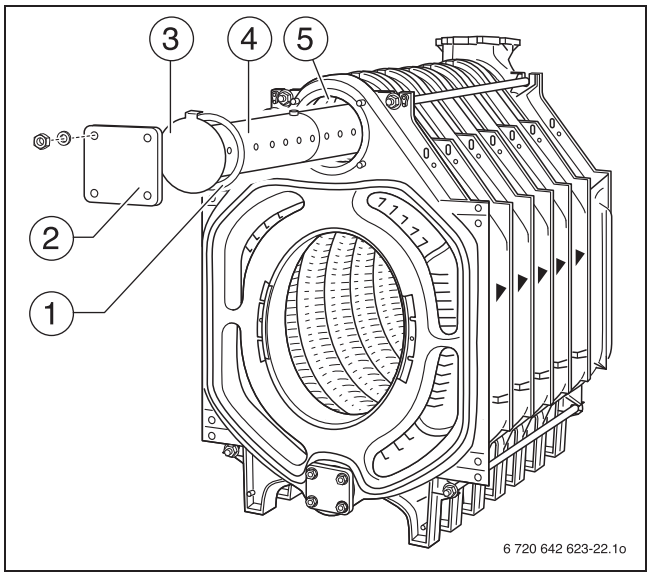

Fig. 24 Installing the supply pipe

7.5 Installing the sensor well

- ▶ Seal and install the sensor well R ¾ from the rear of the boiler (length: 110 mm) into the R ¾ tapped hole of the supply connection (→ Fig. 25, [1]).

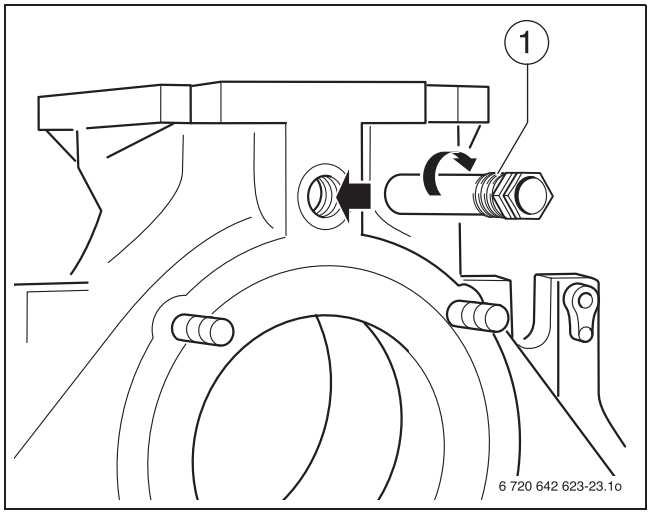

Fig. 25 Fitting the sensor well

7.6 Leak test

Conduct a leak test of the boiler block only when the boiler was delivered disassembled. Pre-assembled sections are leak tested in the factory.

For details of assembling the remainder of the boiler if the block is delivered pre-assembled, see → Chapter 10, page 34.

7.6.1 Carrying out leak test

NOTICE: Risk of system damage from overpressure.
- ▶ Ensure that no pressure, control or safety equipment is fitted during leak tests.

The leak test must be performed with a test pressure of 125 psi (8.6 bar). Use a pressure gauge class 1.0 to measure the pressure.

- ▶ Close off lower boiler hub (→ Fig. 26, [3]) at the front and rear. To do this, place corresponding seal (→ Fig. 26, [1]) on the relevant boiler hub and screw on flange cover with edge length 4 21/64 inches (110 mm). In this case, the flange with the tapped hole (R ¾) for the fill and drain connection (→ Fig. 26, [2]) is mounted on the rear of the boiler.
- ▶ Install the on-site fill and drain valve.
- ▶ Close off supply and return connections (supply connection flange with purger valve).

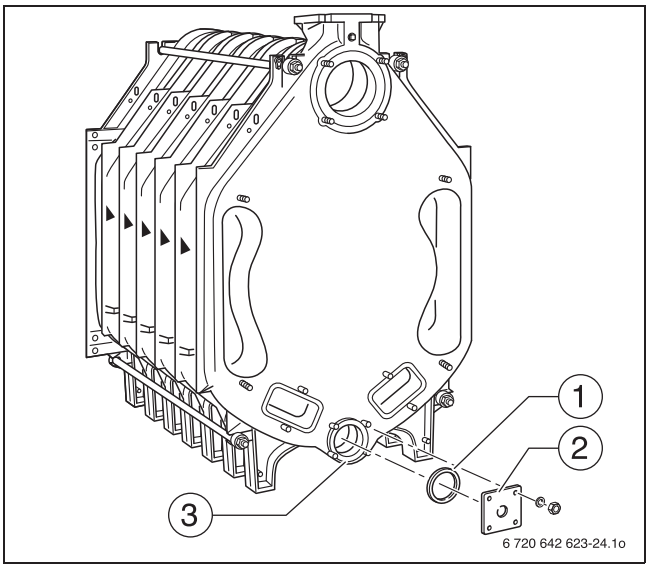

Fig. 26 Fitting the flange

- ▶ Slowly fill the boiler with water via the fill and drain connection. While doing this, purge the air from the boiler via the boiler supply connection with purger.

7.6.2 Sealing leaks

- ▶ If a hub connection is leaking, first drain the water through the fill/ drain valves.
- ▶ Remove supply pipe.
- ▶ Undo nuts on tie rods and remove tie rods.
- ▶ Separate the boiler at the leak location by driving (knocking) in flat wedges or chisels between the sections at the points provided at the top and bottom (→ Fig. 27, [1 and 2], between the sections).

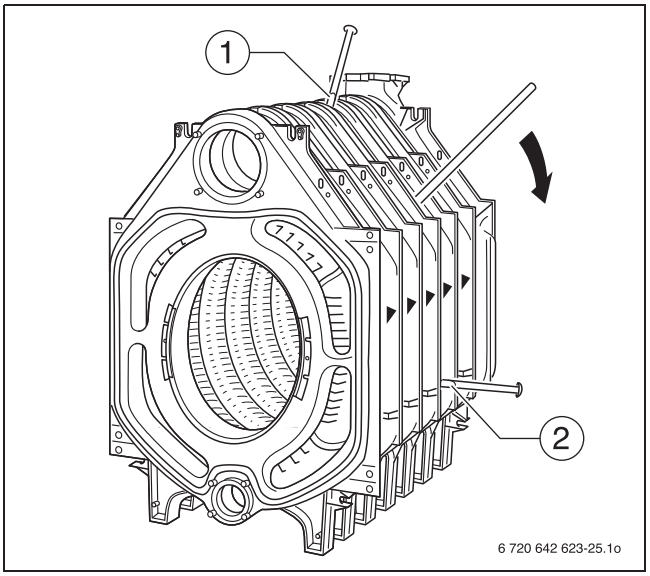

Fig. 27 Separating the boiler block

- ▶ Use new nipples and new sealant rope for reassembly.
- ▶ Pull the boiler back together and repeat the leak test.

7.7 Boiler water connections

Please observe the following information regarding the boiler connection to the system side. These instructions are important for trouble-free operation.

NOTICE: Risk of system damage from leaking connections.
- ▶ All pipe connections to the boiler must be free of stress and tension.

NOTICE: System damage from deposits, local overheating, and corrosion.
- ▶ As a basic rule, clean and flush existing systems thoroughly before connecting the new boiler.
- ▶ Install a desludging unit in the boiler return to prevent damage to the boiler.

The weld neck flange is fitted to the upper boiler hub (→ Fig. 28, [3] – return connection) if the return is connected at a later stage.

The weld neck flange and flat gasket are shown (→ Fig. 28, [4 and 5]).

- ▶ The supply connection flange (→ Fig. 28, [1]) with flat gasket (→ Fig. 28, [2]) is required for connecting the supply at a later stage.

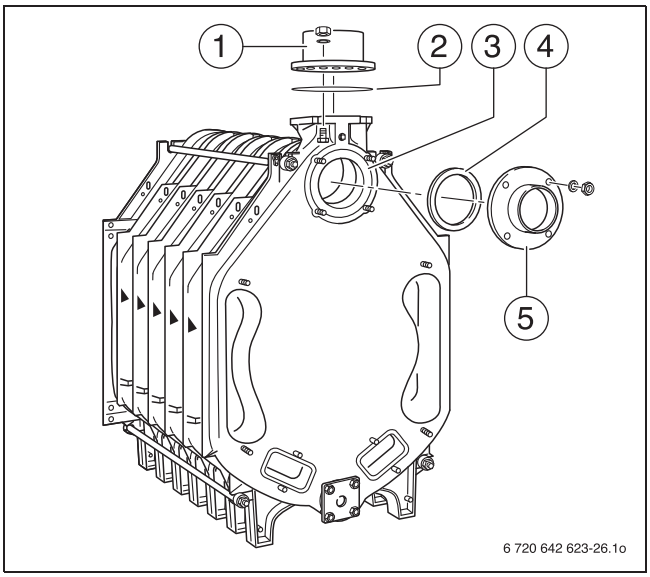

Fig. 28 Fitting a flange

The boiler supply and return manifolds are included in the Buderus scope of delivery.

NOTICE: Risk of system damage from temperature stresses.
- ▶ Install a fill valve on the system side.
- ▶ When the heating system is in operation, do not fill it via the boiler fill & drain valve. Instead, use the fill valve on the system side.

7.8 Installing draft diverter, baffles and burner door

Next step in the assembly process is to install the burner door and draft diverter. The pre-assembled boiler comes with these components already installed.

7.8.1 Positioning the draft diverter

The GP sealant rope (fiberglass cord with silicon casing) which forms a seal is inserted in the draft diverter at the factory.

- ▶ Place the draft diverter onto the four threaded studs on the rear section (→ Fig. 29 [1 to 4]) and secure using washers and nuts.

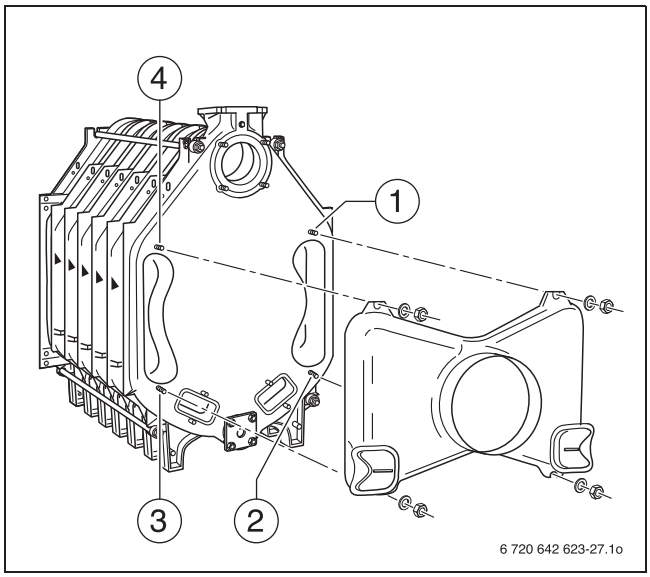

Fig. 29 Fitting the draft diverter

7.8.2 Screwing cleanout cover onto rear section

If the cleanout covers have been removed in order to attach the installation aid to the rear section:

- ▶ Screw the cleanout covers with washers and nuts back onto the rear section (→ Fig. 30, [1 and 2]).

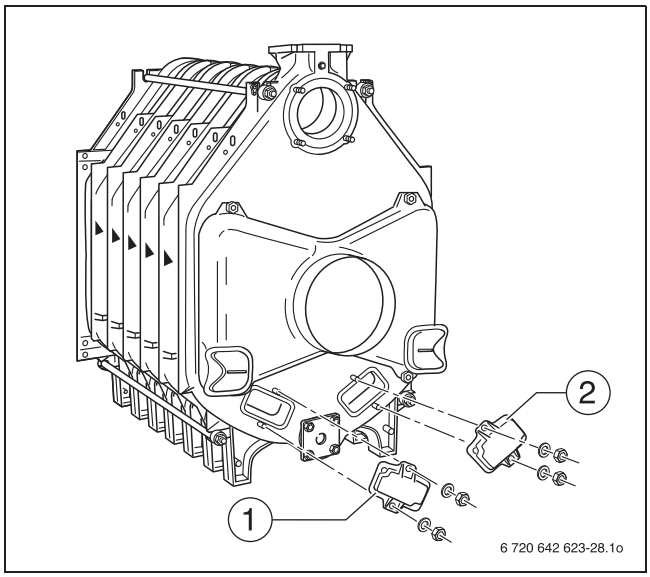

Fig. 30 Fitting the cleanout cover

7.8.3 Fitting the burner door

- Place a few drops of Silastic adhesive 6 inches – 8 inches (15 – 20 cm) apart in the packing grooves (→ Fig. 31, [2]) on the front section (→ Fig. 31).
- Insert GP sealant rope into the packing groove on the front section. The sealant rope joint should be located at the side (→ Fig. 31, [2]).

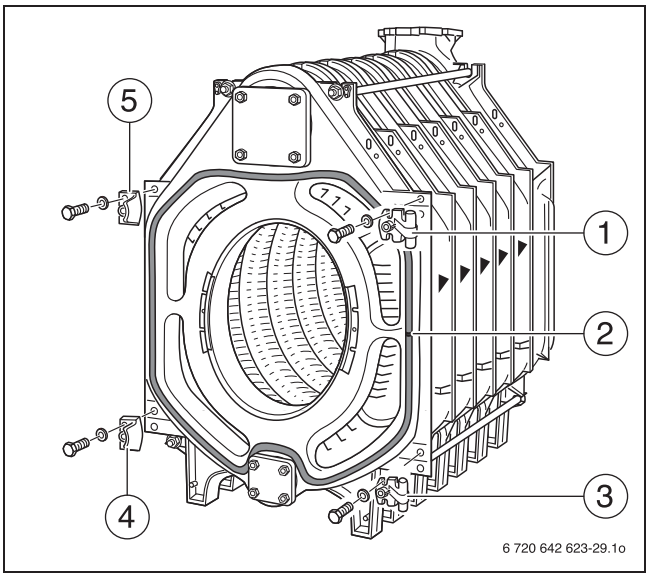

Fig. 31 Fitting the hinge pins and locking brackets

In the factory, both burner door hinge lobes are fitted on the right-hand side (→ Fig. 32 [1 and 2]). For left-hand closing, dismantle the hinge lobes from the right-hand side and reassemble them on the left-hand side of the burner door.

- Screw the hinge pins (right-hand) to the boiler front section with 2 machine screws M12 × 55 in each case (→ Fig. 31, [1 and 3]). For left-hand closing, secure accordingly on the left-hand side.
- Screw on locking brackets with run-on slopes for the burner door (right-hand closing) to the front section with 2 machine screws M12 × 55 (→ Fig. 31, [4 and 5]). For left-hand closing, secure accordingly on the right-hand side.

Make sure the run-on slopes of the locking brackets are on the inside of the boiler.

- Hook the burner door with the hinge lobes into the hinge pins.

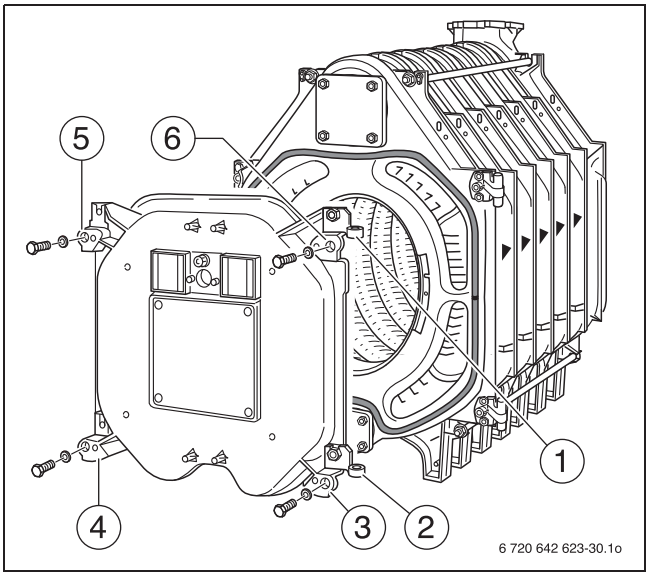

Fig. 32 Hooking in the burner door

7.8.4 Hot gas check plates on front section

The hot gas check plates (→ Fig. 33, [1 and 2]) are each screwed with one hexagon socket screw to the front section at the factory.

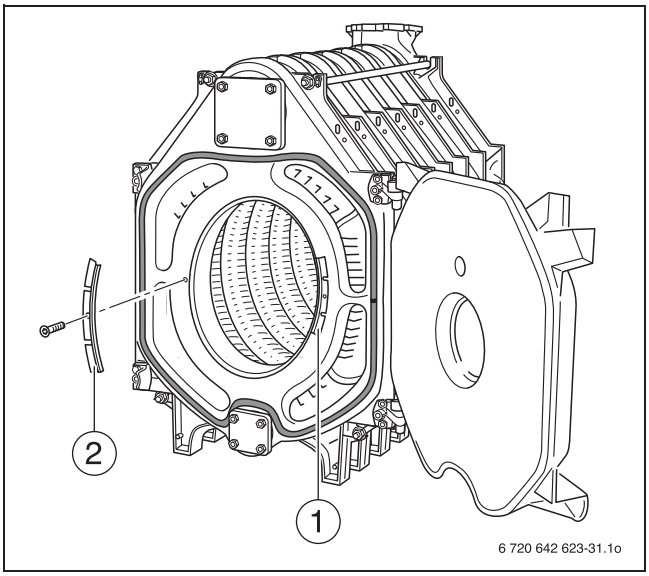

Fig. 33 Position of hot gas check plates

7.8.5 Insert the flue gas baffle plates

In pre-assembled boilers, the flue gas baffles are already fitted.

- ▶ Remove the cardboard transport protectors from the pre-assembled boiler.

- ▶ Take flue gas baffles out of the fittings case and insert into the flue gas passages as indicated by the inscription on them (→ Fig. 34 and Tab. 11).

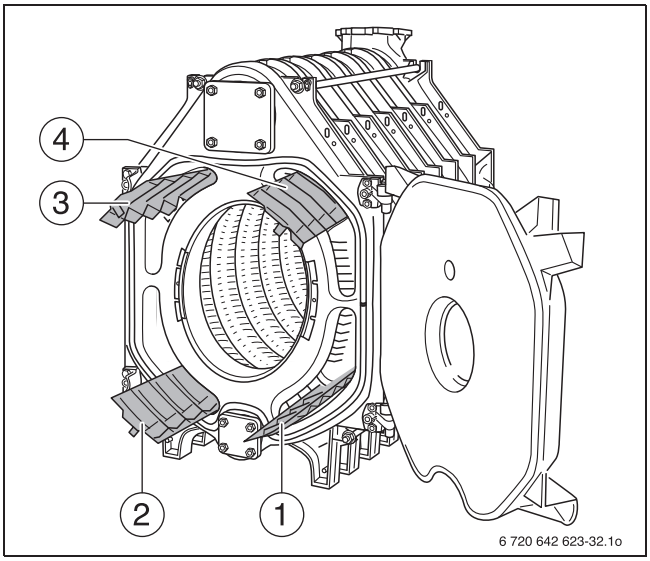

Fig. 34 Heat exchanger baffle plates

[1] Flue gas baffle plates (bottom right)
[2] Flue gas baffle plates (bottom left)
[3] Flue gas baffle plates (top left)
[4] Flue gas baffle plates (top right)

Boiler capacity	Number of boiler sections	Length of flue gas baffle plate in inches (mm)	Installation information on the flue gas baffle plate (→ Fig. 34)
240	7	26 – 25/32 (680)	top right top left bottom right bottom left
295	8		
350	9		
400	10		
455	11	16 – 47/64 (425)	top right top left bottom right bottom left
510	12	–	–

Table 11

7.9 Installation of the boiler jacket

This section describes how to install thermal insulation and jacket components.

- ▶ You must install the cross rails and longitudinal rails before installing the thermal insulation in order to be able to align the brackets correctly.
- ▶ To install the thermal insulation, you need to take the longitudinal rails off again in the following step.

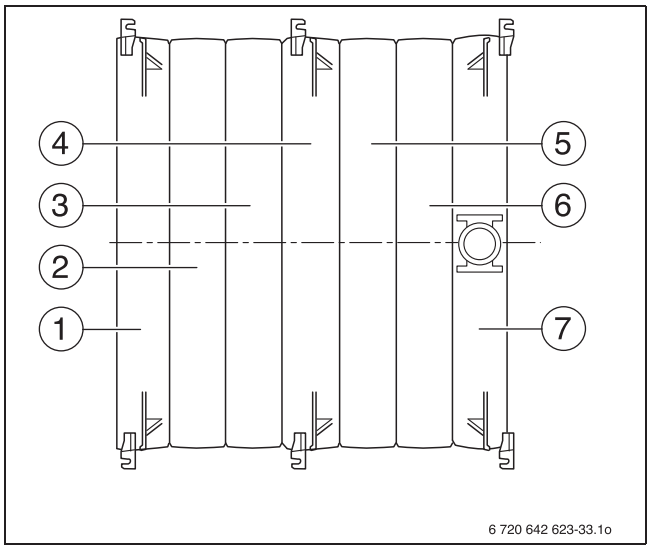

Fig. 35 View from above: boiler block (7 boiler sections) with brackets

7.9.1 Mount the brackets

- ▶ Loosely screw the brackets for the boiler jacket onto the upper ribs of the boiler sections on the left and right (→ Fig. 35, Fig. 36 and Tab. 12).

- ▶ Screw the brackets on the rear section (→ Fig. 36, [2]) to the ribs from behind.
- ▶ Screw the brackets of the front and intermediate sections (→ Fig. 36, [1]) on from the front only.

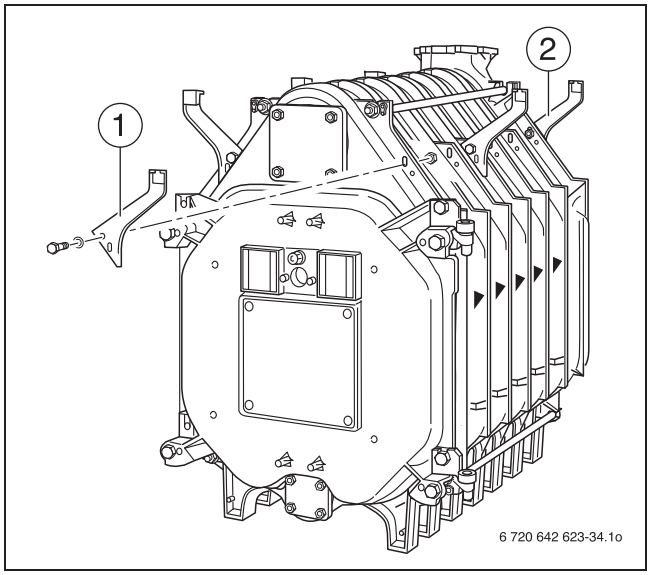

Fig. 36 Installing the mounting brackets

Total number of boiler sections	Right and left-hand installation on...		
	Front section Section no.	Intermediate section Section no.	Rear section Section no.
7	1	4	7
8	1	4	8
9	1	5	9
10	1	5	10
11	1	4 and 7	11
12	1	4 and 8	12

Table 12

7.9.2 Fitting the profile rails

- ▶ Fasten top front crosswise profile rails (→ Fig. 37, [2]) to the cast lugs (→ Fig. 37, [1 and 4]) and screw on hand-tight with hexagon bolts (M8 × 16). The folded edge on the front profile rail must face forward.
- ▶ Fasten top rear crosswise profile rail (→ Fig. 37, [3]) onto the cast lugs and screw in place with hexagon bolts (M8 × 16). The folded edge of the rear profile rail must point toward the rear.

- ▶ You can only align the longitudinal rails or brackets before placing the thermal insulation.
- ▶ Align the longitudinal rails or brackets correctly prior to installation of the side panels, covers and thermal insulation.

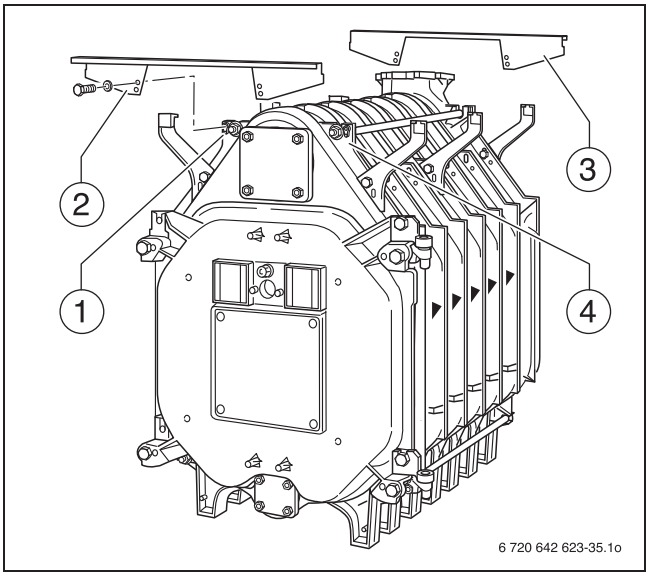

Fig. 37 Fitting the crosswise profile rails

- ▶ Place the longitudinal rails (→ Fig. 38, [1 and 2]) on both brackets on the rear and front section.
- ▶ Push longitudinal rails with pre-fitted screws (→ Fig. 38, [3]) into the notches in the brackets (→ Fig. 38, [4]) and screw together.

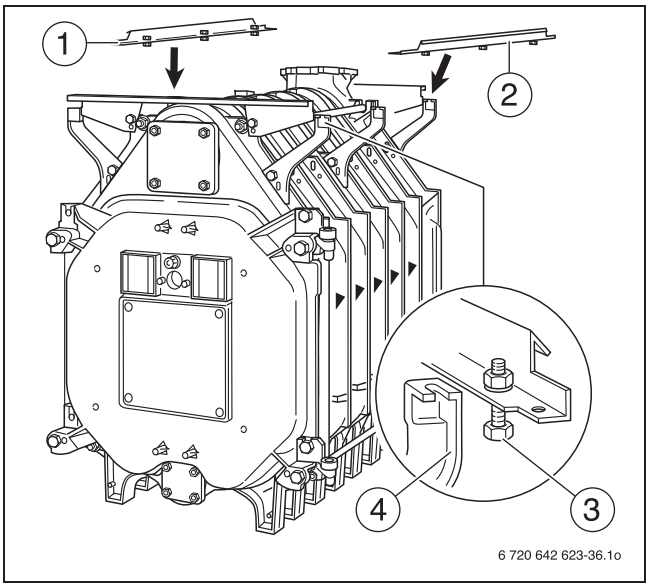

Fig. 38 Installing the longitudinal rails

- ▶ Place longitudinal rail (→ Fig. 39, [1]) with the notch at the front on the notch of the crosswise profile rail (→ Fig. 39, [2]).
- ▶ The longitudinal rail must be pushed from below against the crosswise profile rail at the rear of the boiler.

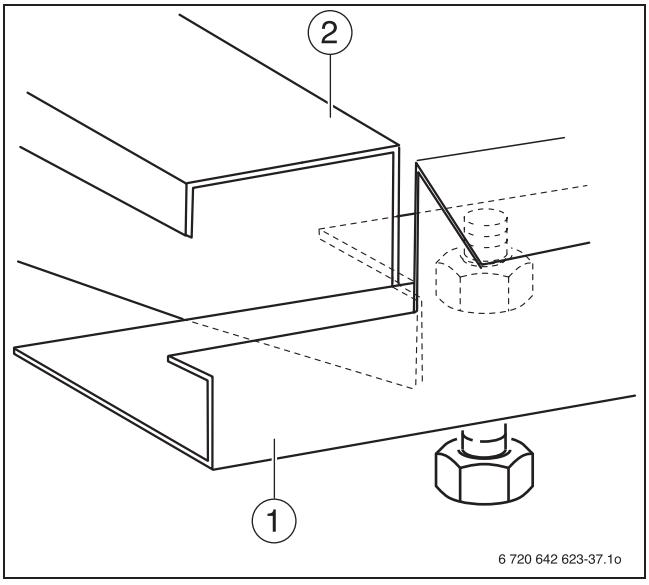

Fig. 39 Place longitudinal rail on crosswise profile rail

- ▶ Align the longitudinal rails, screw on the brackets at the front and/or rear section (→ Fig. 40, [1 and 3]) and fully tighten.
- ▶ Push the center brackets (→ Fig. 40, [2]) against the longitudinal rails from below, then screw onto the boiler block and tighten.

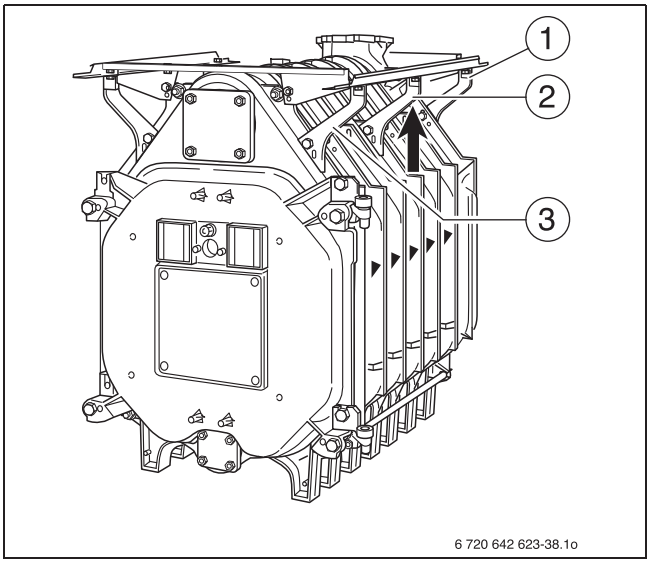

Fig. 40 Aligning the longitudinal rails

7.9.3 Fitting the thermal insulation

First of all, take the longitudinal rails off to install the thermal insulation.

- ▶ The thermal insulation provided (→ Fig. 41, [1]) corresponds to the boiler size. Arrange the thermal insulation on the boiler block as shown in the diagram in Fig. 42 (the numbers above the thermal insulation that is shown spread out correspond to the number of boiler sections).
- ▶ Guide the brackets through the cut-outs in the thermal insulation.
- ▶ Push the thermal insulation under the boiler block in the lower section. The boiler feet are placed in the cut-outs in the thermal insulation.

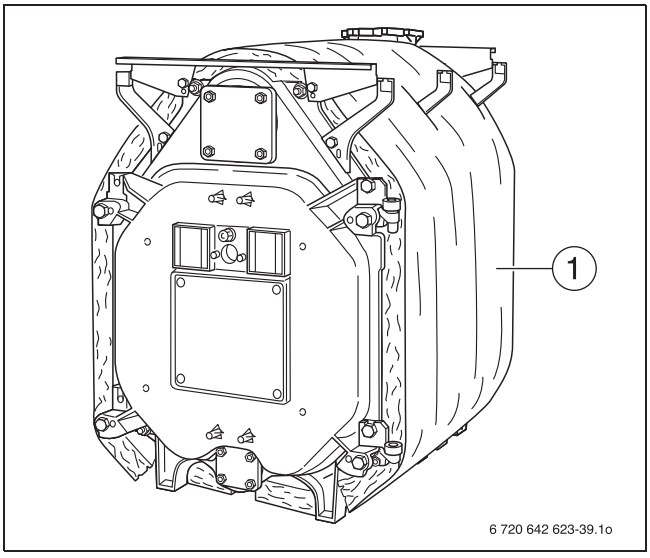

Fig. 41 Boiler block with thermal insulation

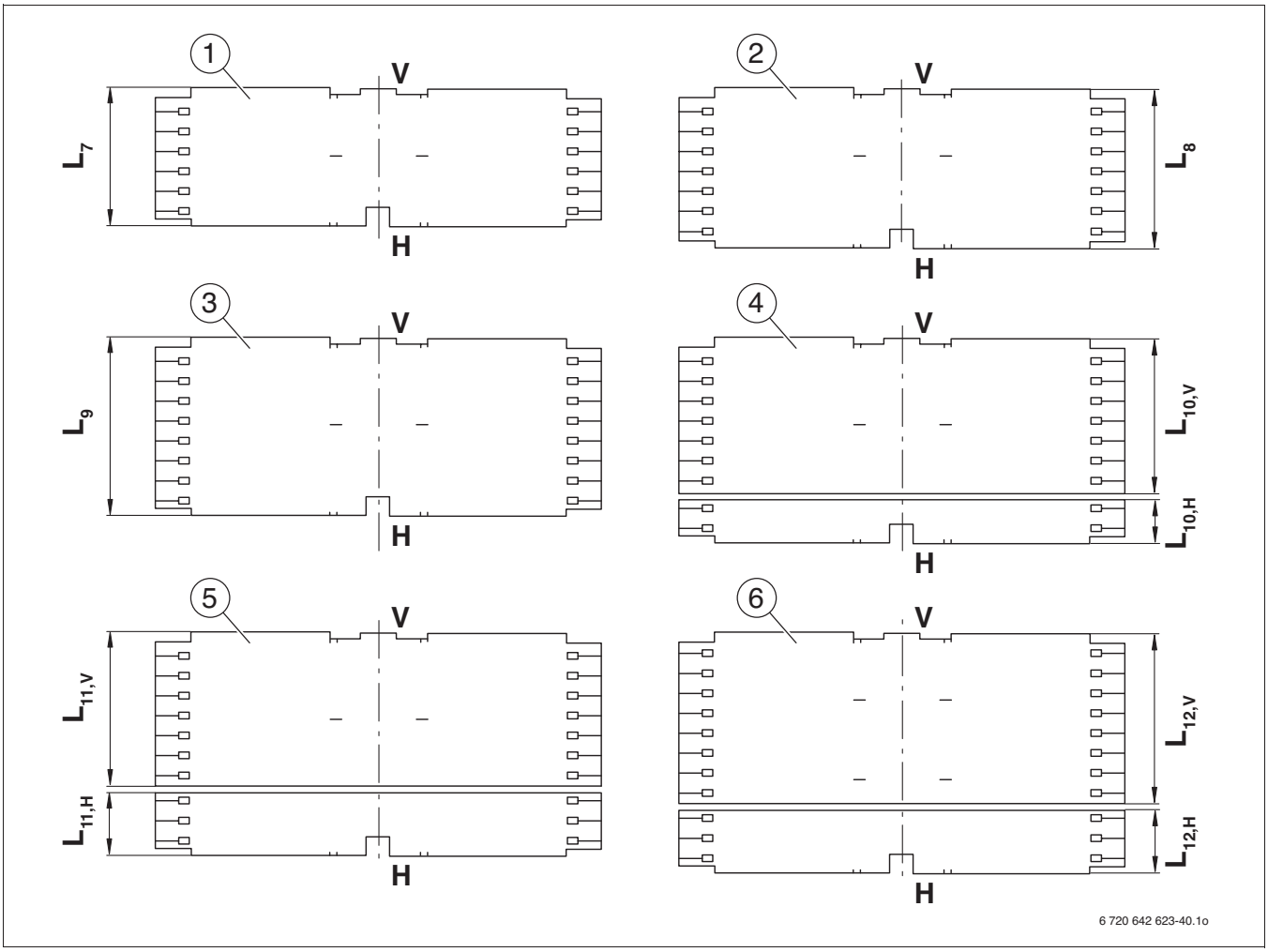

Fig. 42 Thermal insulation for the various boiler sizes

[1] 7 boiler sections
[2] 8 boiler sections
[3] 9 boiler sections
[4] 10 boiler sections
[5] 11 boiler sections
[6] 12 boiler sections
[H] Rear (boiler back)
[L_7] 41 – 3/8" (1050 mm)
[L_8] 52 – 3/4" (1340 mm)
[L_9] 59 – 1/2" (1510 mm)
[$L_{10,H}$] 14 – 3/4" (375 mm)
[$L_{10,V}$] 51 – 3/8" (1305 mm)
[$L_{11,H}$] 21 – 1/2" (545 mm)
[$L_{11,V}$] 51 – 3/8" (1305 mm)
[$L_{12,H}$] 21 – 1/2" (545 mm)
[$L_{12,V}$] 58" (1475 mm)
[V] Front (boiler front)

▶ Screw each lower crosswise profile rail (→ Fig. 43, [1]) at the front and rear to the corresponding boiler feet with two hexagon bolts. The folded edges of these profile rails must face outwards.

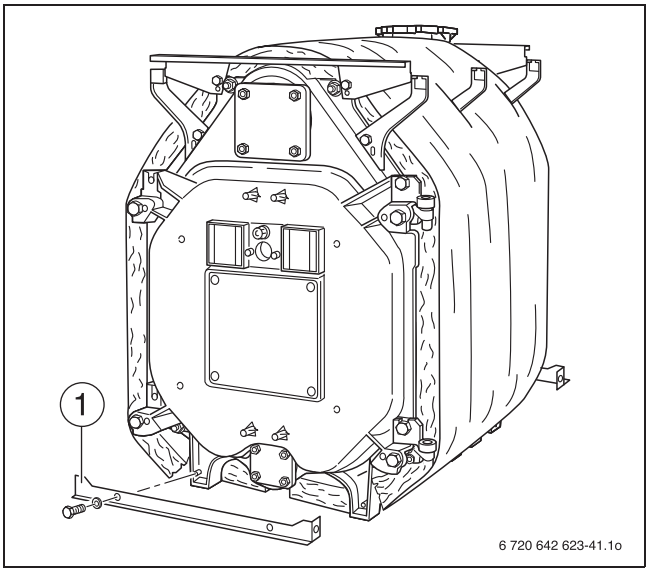

Fig. 43 Fitting the lower crosswise profile rails

- ▶ Fit rectangular thermal insulation (→ Fig. 44. [1]) with the cut-outs facing upwards at the front above the door.
- ▶ Fasten thermal insulation to the block thermal insulation with the 3 spring hooks (→ Fig. 44, [2]).

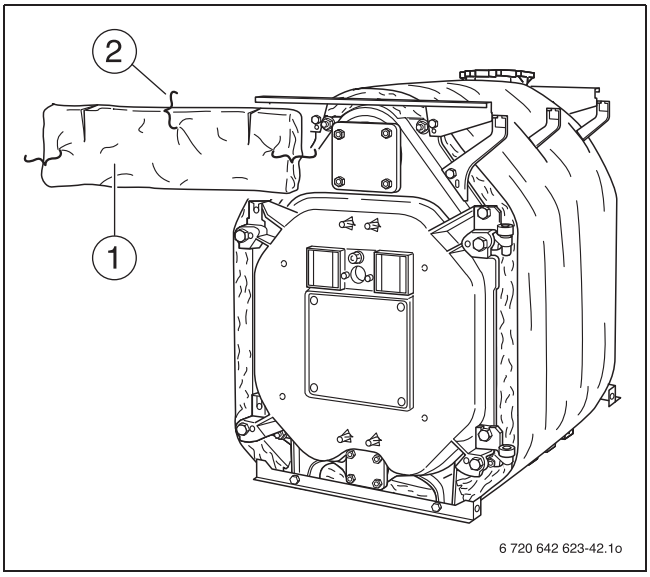

Fig. 44 Installing thermal insulation at the front

- ▶ Push longitudinal rails (→ Fig. 45, [1 and 2]) with pre-fitted screws into the notches in the brackets, as previously described, and screw together.

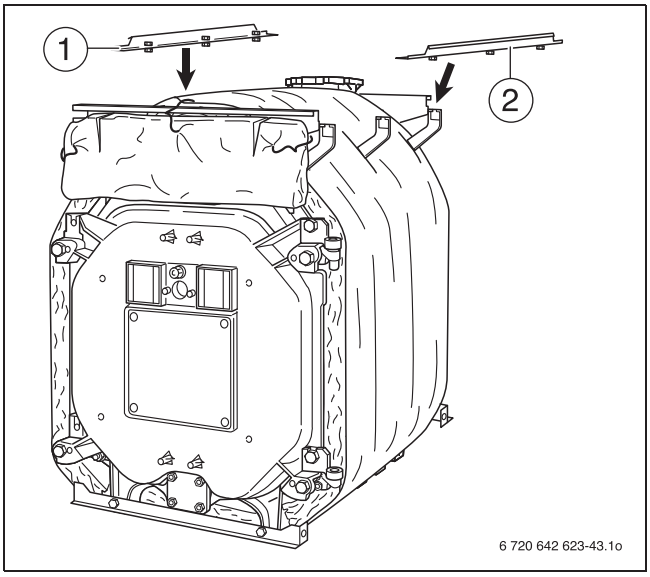

Fig. 45 Installing the longitudinal rails

- ▶ Push back rear section thermal insulation (→ Fig. 46, [1]) onto the flue outlet. The cut-out for the boiler return (→ Fig. 46, [2]) must point upwards.
- ▶ Attach the thermal insulation for the rear section via the four spring hooks to the boiler block thermal insulation.
- ▶ Close the slot below the flue outlet with a spring hook (→ Fig. 46, [3]).

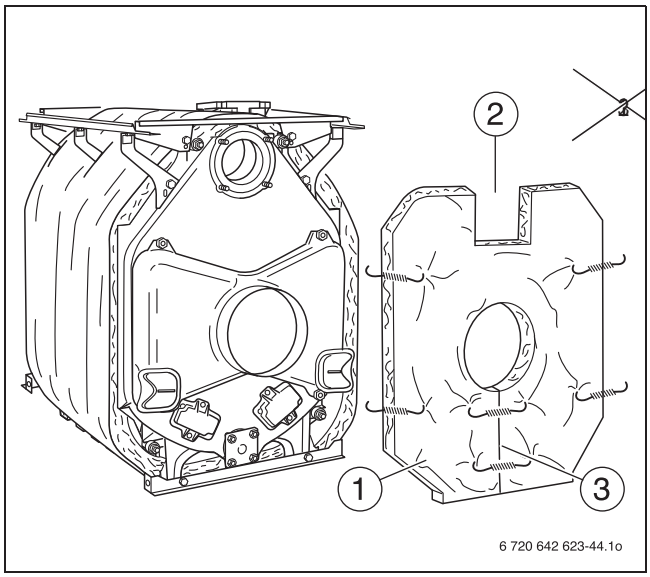

Fig. 46 Fitting the thermal insulation for the rear section

- ▶ Hook each base rail (→ Fig. 47, [1 and 3]) with the long projection facing toward the front (→ Fig. 47, [2]) into the bottom crosswise profile rails.
- ▶ Initially screw the side of the base rails loosely to the crosswise profile rails using self-tapping screws.

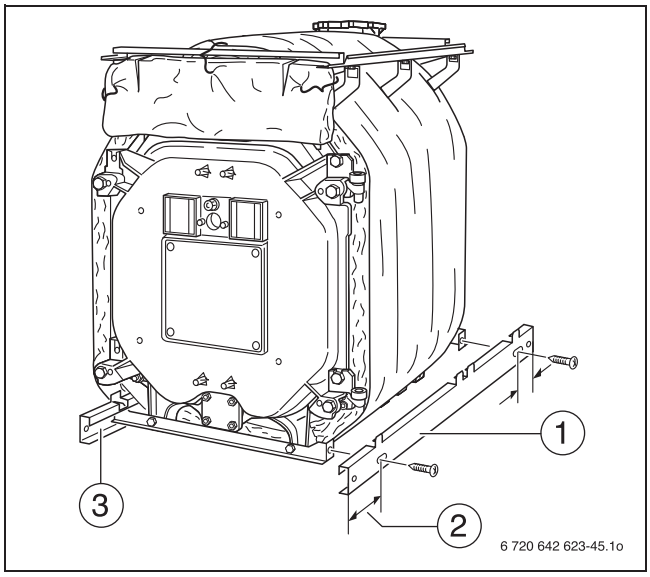

Fig. 47 Mounting the side base rails

7.9.4 Fitting side panels and top covers

▶ Fit all side panels as shown in the diagram (→ Fig. 48).

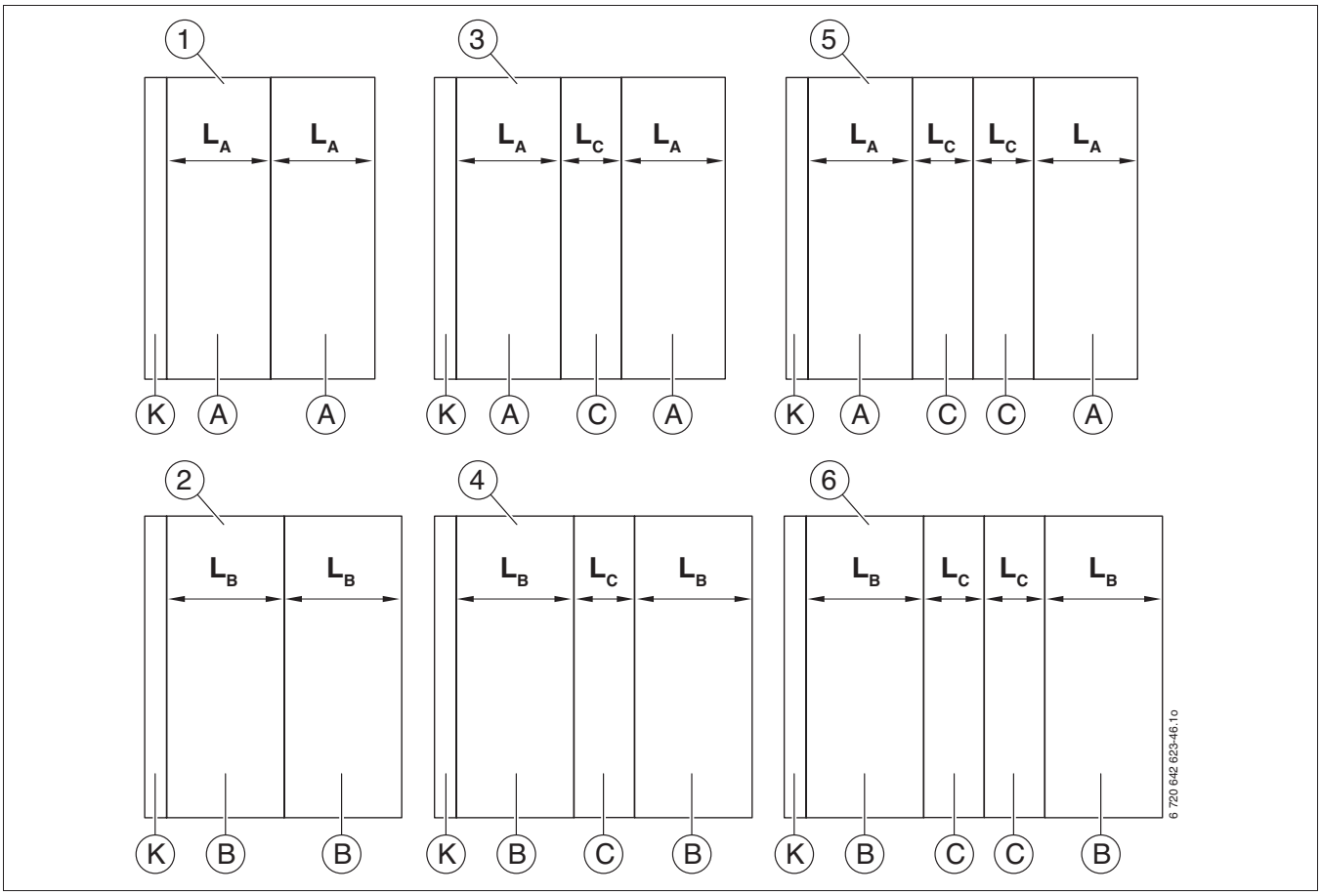

Fig. 48 Arrangement of side panels for the various boiler sizes (dimensions in inches (mm))

[1] 7 boiler sections
[2] 8 boiler sections
[3] 9 boiler sections
[4] 10 boiler sections
[5] 11 boiler sections
[6] 12 boiler sections
[K] Flap 4 – 21/64" (110 mm)
[L_A] 24 – 7/32" (615 mm)
[L_B] 27 – 9/16" (700 mm)
[L_C] 13 – 25/64" (340 mm)

To fit the side panel sections, the side panel flaps must first be fastened to the front side panels.

- ▶ Fasten the hinges to the side panel flaps beforehand using 2 self-tapping screws in each case.
- ▶ Hook the hinge pins (→ Fig. 49, [1]) on the side panel flap into the cut-out of the front side panel and secure with self-tapping screws.
- ▶ Attach tension spring (→ Fig. 49, [2]) to the side panel and side panel flap.

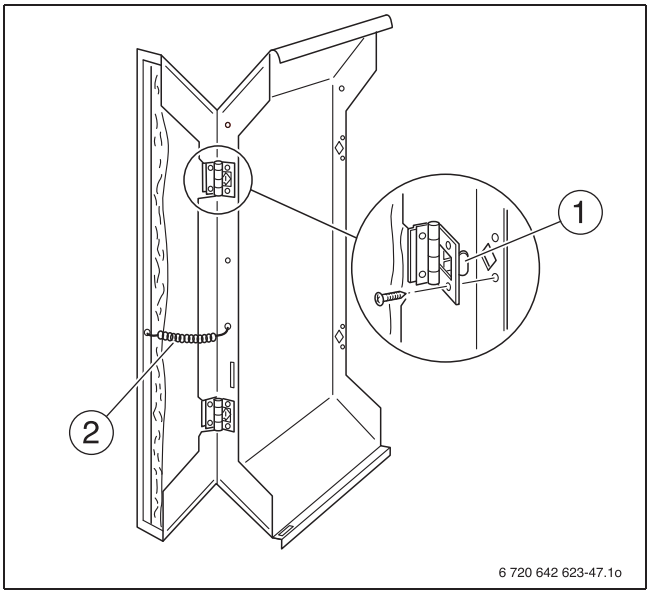

Fig. 49 Fitting the side panel flaps

- ▶ Attach the side panels (→ Fig. 50, [2]) on the bottom left and right to the lugs in the base rails that have been bent upwards (→ Fig. 50, [1]) then push up over the folded edge of the longitudinal rails.

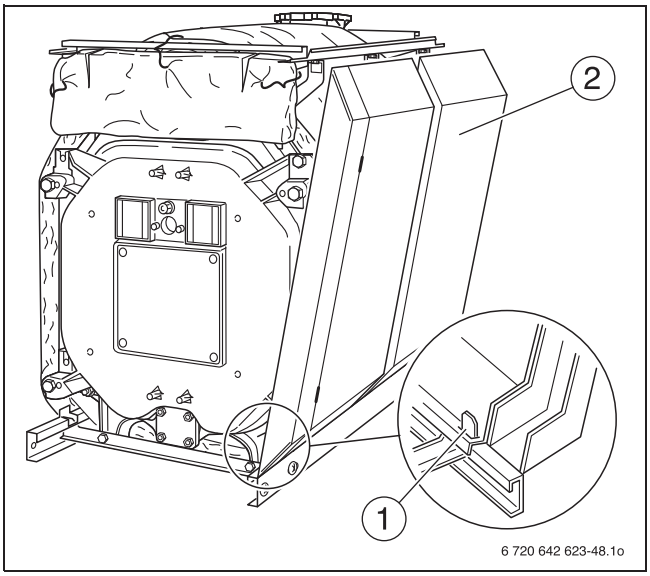

Fig. 50 Attaching the side panel sections

- ▶ Once the side panels (→ Fig. 51 [2]) have been vertically aligned, the self-tapping screws in the base rail (→ Fig. 51, [4]) must be tightened.
- ▶ Push the base rails that run crosswise (→ Fig. 51, [1 and 3]) into the base rails that run lengthwise from the front and back. The folded edge on the cross plate must be at the bottom in each case, and point toward the boiler (→ Fig. 51).

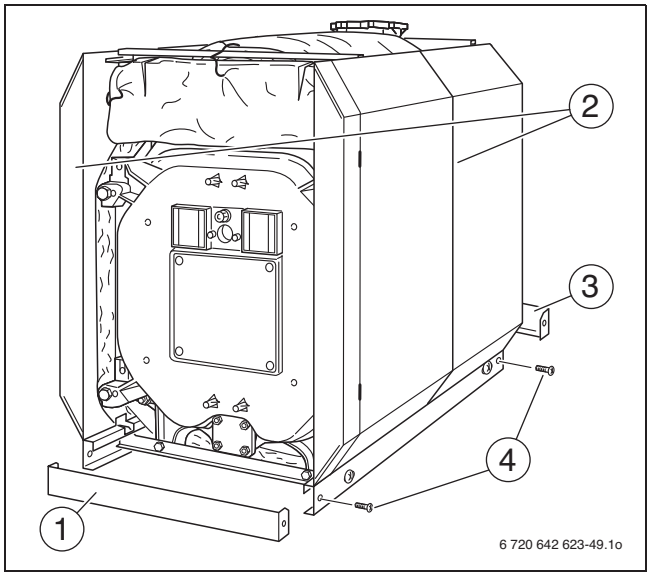

Fig. 51 Mounting the base rails

- ▶ Attach the front cover (→ Fig. 52, [1]) to the front side panels with the two hooks (→ Fig. 52, [3]).
- ▶ Screw the front cover to the longitudinal rails from below with two self-tapping screws (→ Fig. 52, [2]).

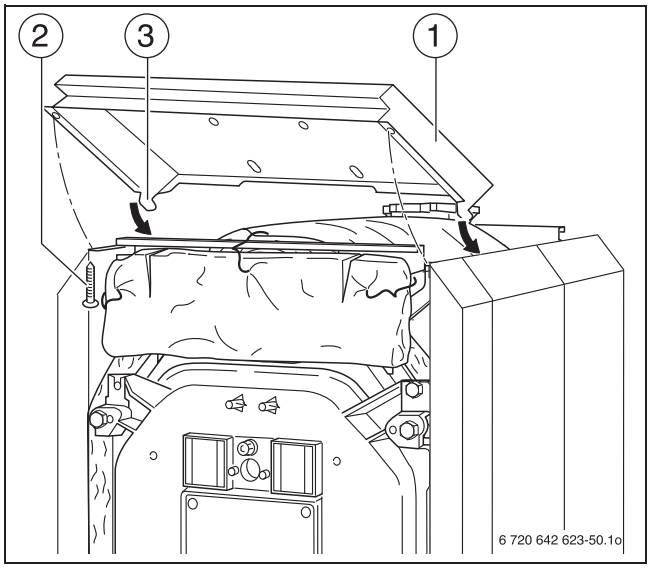

Fig. 52 Fitting the front cover

Before fitting the other parts of the cover, you must first install the control panel, route the capillaries to the sensor well and insert the sensor into the sensor well (→ Chapter 9, page 32).

▶ Push the center boiler cover with the folded edges (→ Fig. 53, [1]) under the front boiler cover and insert into the bead of the side panels.

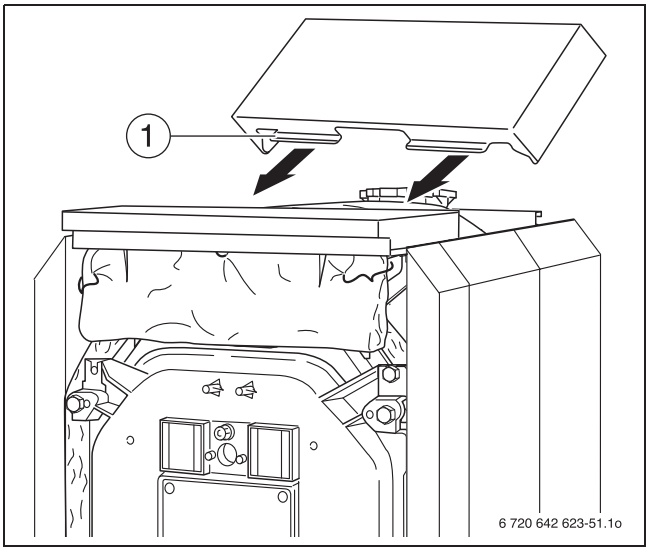

Fig. 53 Fitting the center cover

▶ Fit the rear boiler cover on the side panels with the folded edges and cut-out for the heating circuit flow (→ Fig. 54, [1]) facing toward the front.

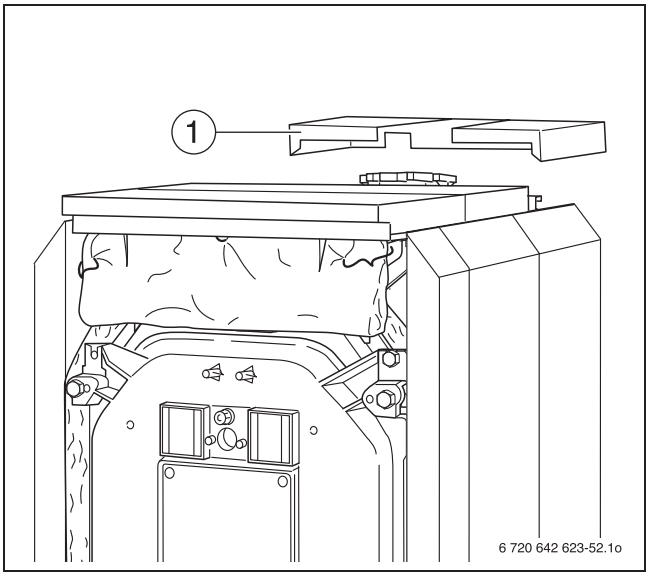

Fig. 54 Fitting the rear cover

▶ Push upper rear boiler panel under the rear boiler cover (→ Fig. 55, [1]) and screw to the side panels from the back using four self-tapping screws (→ Fig. 55, [2]).

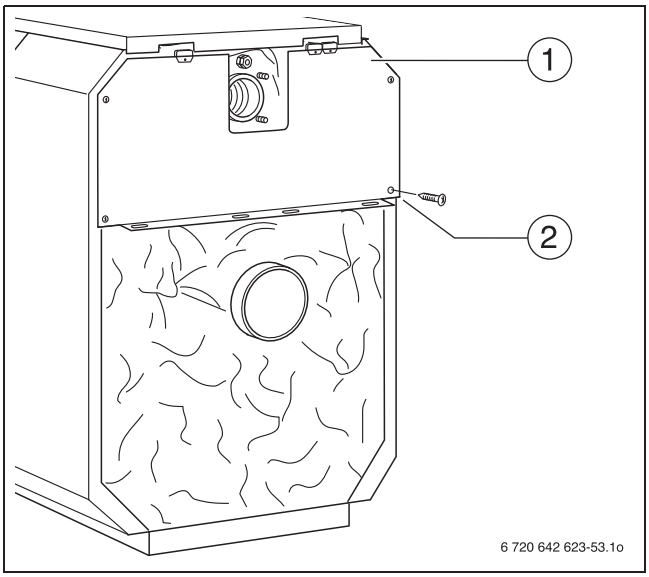

Fig. 55 Fitting the rear boiler panel

▶ Insert snap nuts into the left and right-hand side panels and also the rear boiler panel sections (→ Fig. 56, [1, 3, 4, and 8]).

▶ Hang the bottom rear boiler panel sections on the left and right into the slots in the folded edge of the upper rear boiler panel and the side panel (→ Fig. 56, [5]).

▶ Secure the rear panel sections of the boiler to the side panels with self-tapping screws.

▶ Screw the connecting plate (→ Fig. 56, [2]) below the flue outlet to the rear boiler panel sections using self-tapping screws.

▶ Fasten the plastic cable entries to the left or right-hand side of the upper rear boiler panel (→ Fig. 56, [6 and 7]).

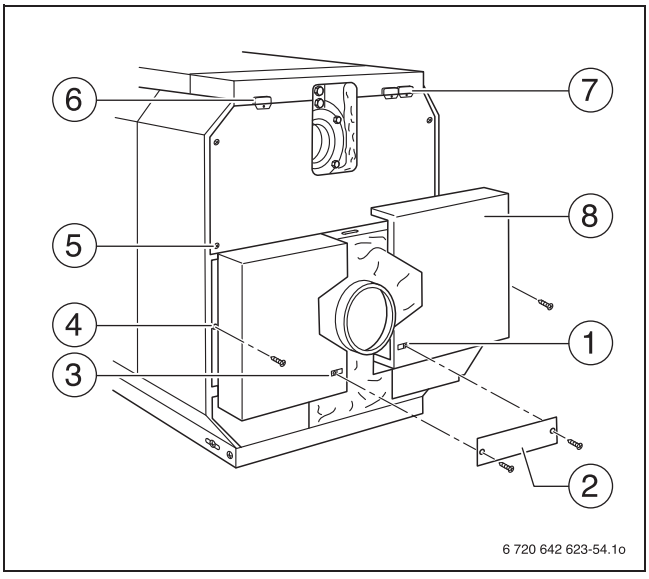

Fig. 56 Installing the rear boiler panel sections

- ▶ Snap burner cable with strain relief into cable entry (→ Fig. 57, [1]).
- ▶ Insert the burner cable with strain relief into the burner door cladding.
- ▶ Route the burner cable up along the folded edge of the burner door cladding and fasten with the cable clamp to ensure the burner cable does not come into hot components of the boiler.
- ▶ Fit the burner door cladding on the burner door from the front and screw on with four machine screws (→ Fig. 57, [2 to 5]).
- ▶ Route the burner cable to the cable entry for the control panel.

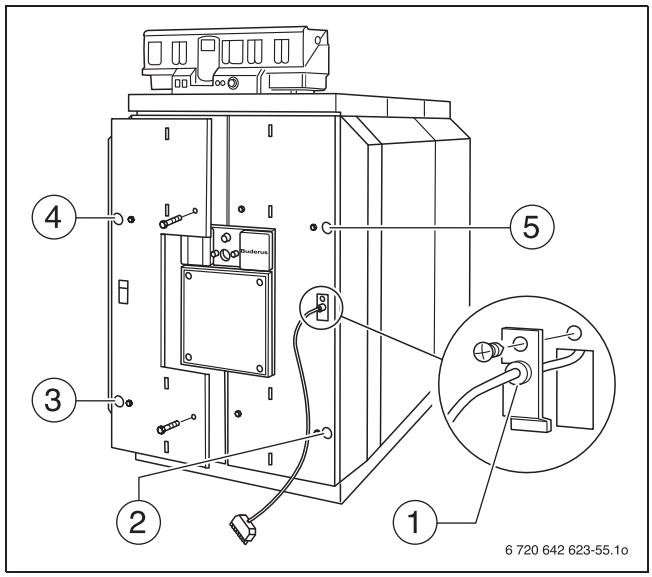

Fig. 57 Installing the burner door cladding

- ▶ Attach the burner door panels to the burner door cladding (→ Fig. 58, [1 and 2]).

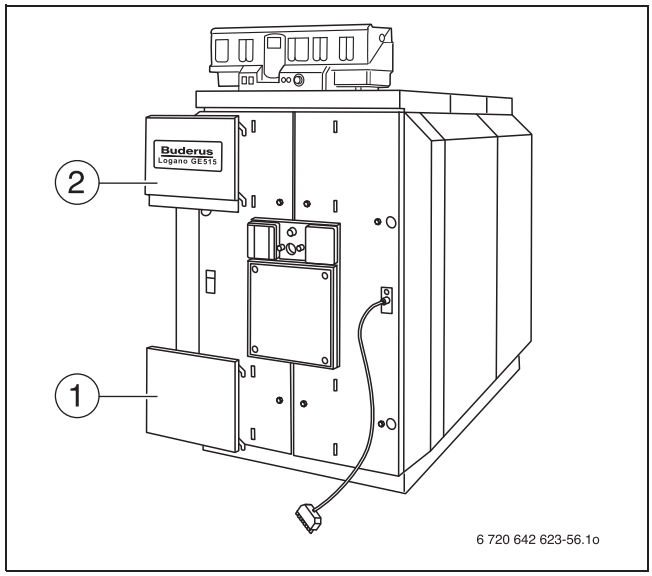

Fig. 58 Attaching the burner door panels

When the boiler is supplied ready-assembled, the type plate can be found in the combustion chamber accompanied by the assembly and maintenance instructions; when the boiler supplied in separate sections, it can be found in the transparent pocket on the burner door.

- ▶ Subject to the boiler location, affix the type plate to the top right or left side panel where it can be clearly seen.

8 Connecting the boiler on the flue gas side

This chapter explains how to connect the boiler on the flue gas side.

8.1 Fitting the vent pipe sealing collar (accessory)

We recommend you use a vent pipe sealing collar (→ Fig. 59, [1]).

- ▶ Push the vent pipe (→ Fig. 59, [4]) as far as possible onto the draft diverter outlet (→ Fig. 59, [6]).
- ▶ Place the vent pipe sealing collar (→ Fig. 59, [1]) around the vent pipe (→ Fig. 59, [4]) and draft diverter (→ Fig. 59, [6]) outlet so that it overlaps at the top.
- ▶ Place hose clamps (→ Fig. 59, [5]) over the vent pipe sealing collar (→ Fig. 59, [1]). One of the hose clamps (→ Fig. 59, [5]) must press onto the draft diverter outlet (→ Fig. 59, [6]) and and one onto the vent pipe (→ Fig. 59, [4]).
- ▶ Tighten hose clamps (→ Fig. 59, [5]). The vent pipe sealing collar (→ Fig. 59, [1] must fit smoothly and firmly in place.

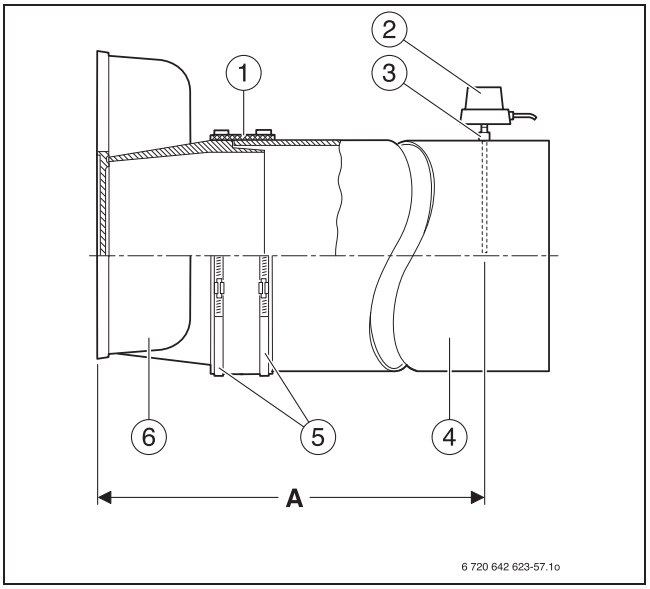

Fig. 59 Installing the vent pipe

[1] Vent pipe sealing collar
[2] Flue gas temperature sensor
[3] Sleeve
[4] Vent pipe
[5] Hose clamps
[6] Exhaust manifold
[A] 2 × Vent pipe diameter, at least 28 – 22/64 inches (720 mm)

Retighten the hose clamps if required.

8.2 Installing a flue gas temperature sensor (accessory)

- ▶ Weld a sleeve (→ Fig. 59, [3]) at a distance of 2 × vent pipe diameters (A) from the draft diverter (→ Fig. 59, [6]) in the vent pipe (→ Fig. 59, [4]).
- ▶ Fit the flue gas temperature sensor (→ Fig. 59, [2]) as described in the separate installation manual.

9 Installing the control panel

This section explains how to install a Logamatic 4000 series control panel and its set of temperature sensors.

9.1 Installing the control panel

Fig. 60 shows the control panel and the top cover "A" from the back.

- ▶ Loosen both screws on top of the control panel (→ Fig. 60, [1]) and remove the top cover.
- ▶ Mounting the control panel in place Fit the control panel at the front by inserting the alignment tabs (→ Fig. 60, [4]) into the oval holes in the front top boiler cover (→ Fig. 60, [5]). Tilt the control panel forward and then tip backward. The flexible hooks (→ Fig. 60, [2]) must engage with the rectangular cutouts in the rear of the front boiler cover (→ Fig. 60, [3]).
- ▶ Attach the base of the control panel to the top cover (→ Fig. 60, [6]) using two self-tapping screws (→ Fig. 60, [7]).

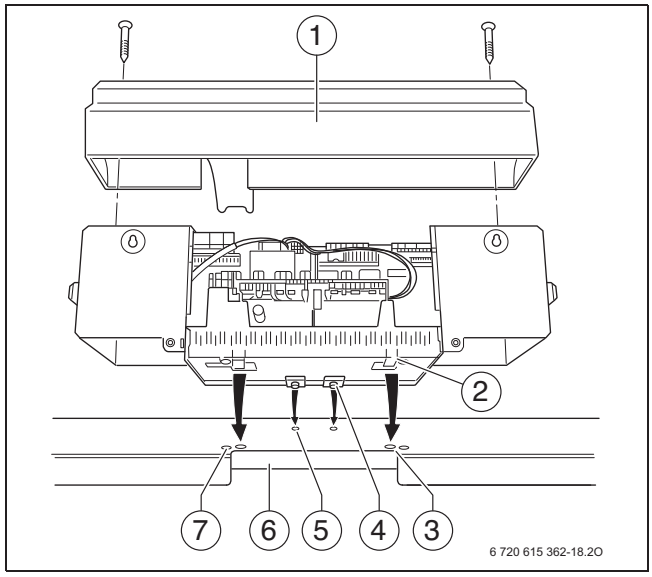

Fig. 60 Installing the control panel

9.2 Fitting temperature sensor assembly and burner cable

Observe the following when connecting the control panel:

- ▶ Lay out cables and capillaries carefully.
- ▶ Do not bend the capillaries during installation.
- ▶ Never carry out any electrical work on the heating system unless you are licensed for this type of work. If you are not suitably qualified, arrange for a qualified electrician to make the electrical connections.
- ▶ Observe the local regulations!

- ▶ If necessary, make knock-outs (→ Fig. 61, [1]) in the rear panel of the cable entry (Logamatic 33xx) or remove the rear panel section (Logamatic 43xx) (→ Fig. 61, [2]).
- ▶ Route the capillaries through the cable entry and unroll to the required length.

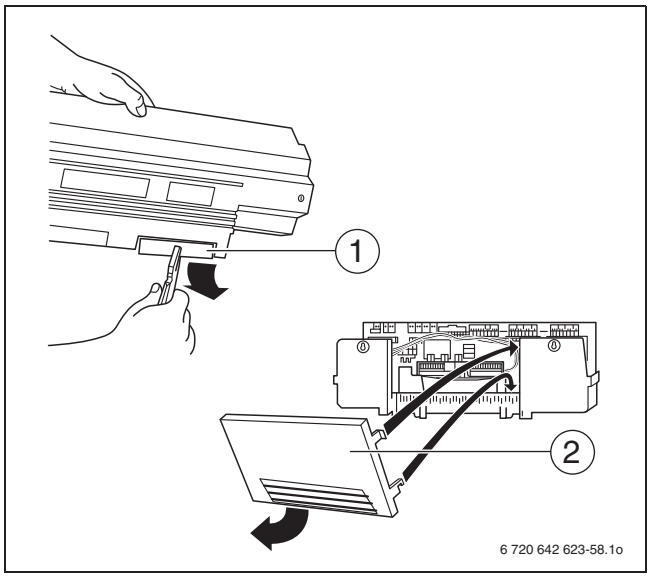

Fig. 61 Preparing the cable entry

The sensor well has already been sealed in the flow connection socket (→ Chapter 7.5, page 18).

The temperature sensor set connected to the control panel (consisting of three temperature sensors and one sensor blind piece → Fig. 62, [1]) is installed in the sensor well R ¾.

- ▶ Route capillary pipe sensor to the measuring port of the boiler and then guide the sensor into the sensor well (→ Fig. 62, [2]) and secure with the retaining clip (→ Fig. 62, [3]).

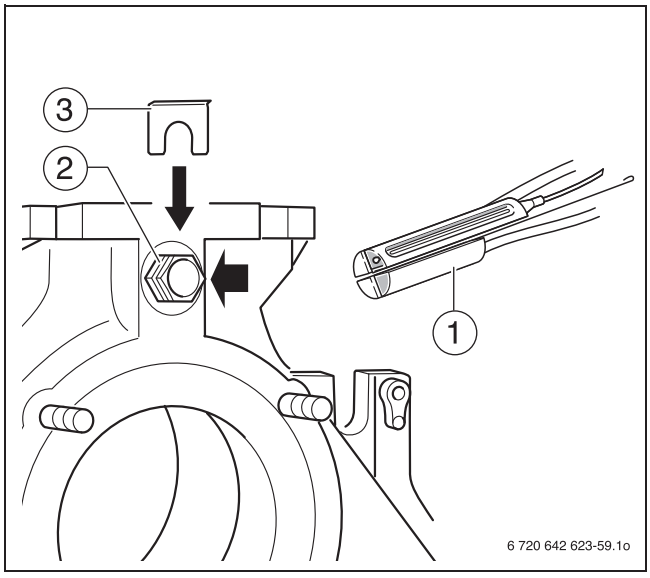

Fig. 62 Installing the temperature sensor assembly

- ▶ Screw cable entry (→ Fig. 63, [1 and 2]) to the left and right of the rear boiler panel.

A permanent connection must be made in accordance with EN 50165 or the relevant national installation standard.

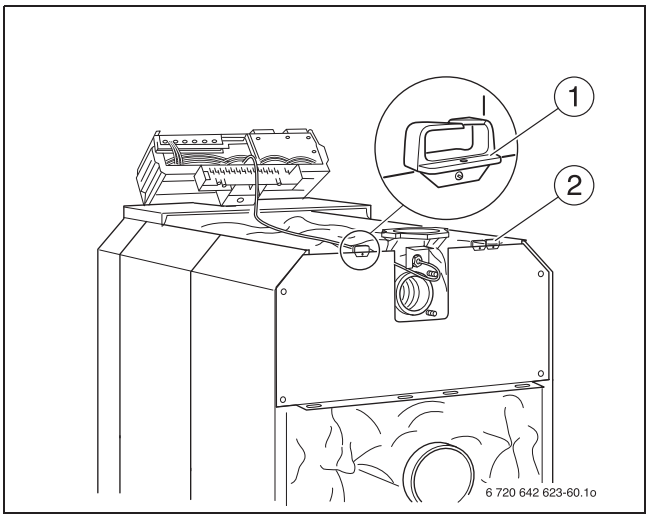

Fig. 63 Making the electrical connections

▶ Connect the electrical cables as shown in the wiring diagram. Take care to ensure proper cable and capillary tube routing.

Secure all cables with cable strain reliefs.

▶ Insert cable strain relief with cable inside into the frame and secure by closing the lever (→ Fig. 64, [1]).

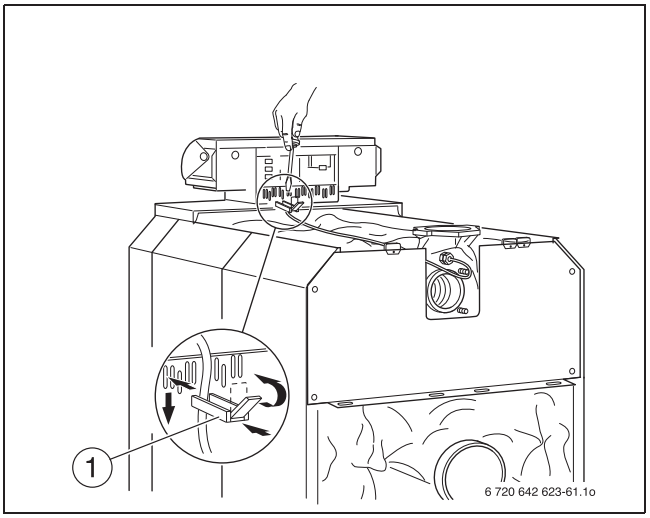

Fig. 64 Fastening the connecting cables

▶ Engage the lower hook of the rear panel (Logamatic 43xx) with the frame at an angle and tilt upward until the upper hooks engage with the side panels (→ Fig. 61, [2]).

▶ Put the top cover in place (→ Fig. 60, [1]) and tighten the screws (→ Fig. 65).

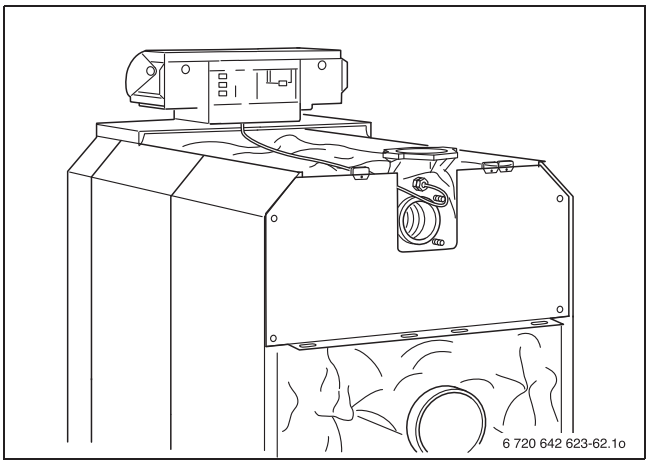

Fig. 65 Boiler with fitted control panel

10 Mounting the burner

This chapter explains the basic steps involved in fitting a burner

NOTICE: Risk of system damage from use of incorrect burner.
- ▶ Only use burners that meet the technical requirements of the oil/gas-fired boiler Logano G515 (→ Chapter 3, page 8).

- ▶ Close the burner door and seal with 4 machine screws (M16 × 140) (→ Chapter 7.8.3, page 21, Fig. 32, [3 to 6]). Tighten the machine screws evenly crosswise.

You can obtain undrilled or predrilled burner plates (hole pattern depends on burner) as accessories from Buderus.

If you have ordered an undrilled burner plate, you will have to machine the plate on site:
- ▶ Drill or cut the burner plate (→ Fig. 66, [1]) to match the required burner tube diameter Ø 10 – 5/8 inches (270 mm).
- ▶ Drill burner attachment holes using the burner flange as a template.
- ▶ Screw burner plate onto the burner door (seal with GP sealant rope; diameter Ø 25/64 inches (10 mm)).
- ▶ Screw the burner to the burner plate.
- ▶ Cut out insulating rings to match the burner tube diameter (→ Fig. 66, [2]).
- ▶ Fill the remaining gap between the burner door thermal insulation and the burner tube → Fig. 66, [4]) using the appropriate insulating rings (→ Fig. 66, [3]).
- ▶ Connect the vent connection to the burner to ensure the inspection window remains free of deposits.

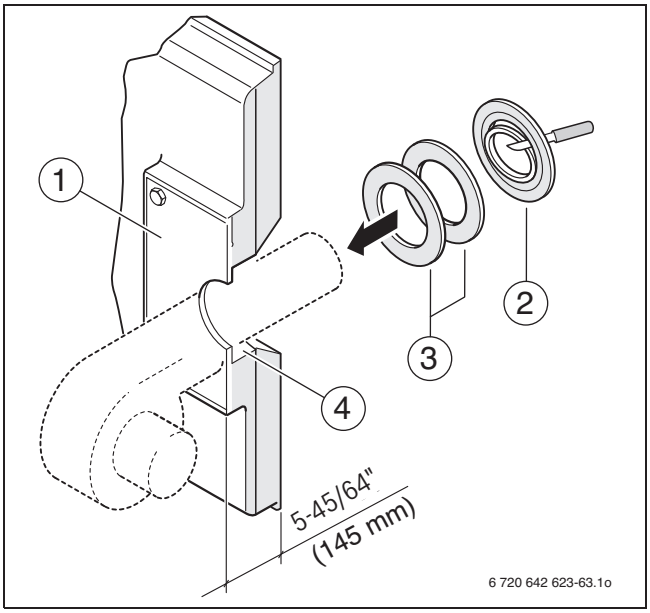

Fig. 66 Mounting the burner

11 System start-up

You can connect control panels of the 4000 series to the Logano G515. The commissioning process for the different types of control panel is the same.

NOTICE: The boiler can be damaged through heavy dust deposits!
- ▶ Do not operate the boiler where heavy dust contamination persists, e.g. through building work inside the boiler room.

11.1 Filling the system

NOTICE: Risk of system damage from temperature stresses.
- ▶ During operation, only fill the heating system via the fill valve on the system side (return).

Refer to the table below for information about correct use and treatment of the fill and make-up water.

▶ Complete the commissioning log (→ Chapter 11.6, page 37).

The pH value of the boiler water increases after the heating system has been filled. After 3 – 6 months (at the time of the first service), check whether the pH value of the boiler water has stabilized.

Overall boiler output MBH (kW)	Ca $(HCO_3)_2$ concentration / grains per gallon[1] (ppm)	Maximum fill and make-up water quantity V_{max} / ft^3 (m^3)	Boiler water pH value
341 < Q ≤ 1,194 (100 < Q ≤ 350)	≤ 11.7 (≤ 2.0)	V_{max} = three times system volume	8.2–9.5
1,194 < Q ≤ 3412 (350 < Q ≤ 1000)	≤ 8.8 (≤ 1.5)		
341 < Q ≤ 1,194 (100 < Q ≤ 350)	> 11.7 (> 2.0)	$V_{max} = 0,0243 \cdot \frac{Q(MBH)}{Ca(HCO_3)_2\left(\frac{gr}{gal}\right)}$ $\left(V_{max} = 0,0313 \cdot \frac{Q(kW)}{Ca(HCO_3)_2\left(\frac{mol}{m^3}\right)}\right)$	8.2–9.5
1,194 < Q ≤ 3412 (350 < Q ≤ 1000)	> 8.8 (> 1.5)		

Table 13 Requirements for fill, make-up and boiler water

1) 1 ft^3 = 7.48 gal

11.2 Commissioning the system

Observe the following when commissioning:

- ▶ Purge the air from your heating system via its radiators prior to commissioning.
- ▶ Check that the hot gas baffle plates are inserted correctly (→ Chapter 7.8.5, page 22).

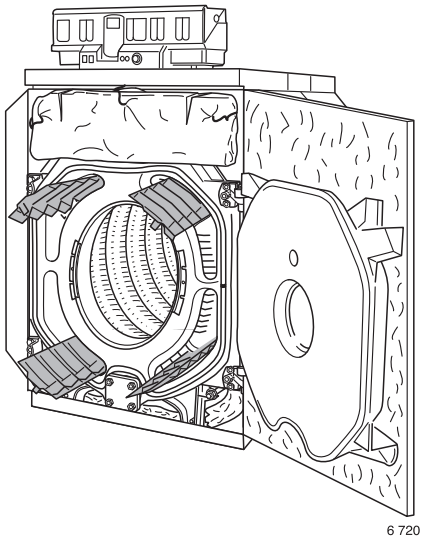

Fig. 67 Check position of heat exchanger baffles

11.3 Start up the control panel

Please see the accompanying technical documentation for the 4000 series control panel you are using for information on how to start it up.

11.4 Initial burner start-up

- ▶ When commissioning the burner, follow the installation and maintenance instructions enclosed with the burner.
- ▶ Fill out the commissioning log in the burner documentation.

If you notice when taking measurements for the commissioning log that the flue gas temperature is too low for the flue pipe (risk of condensation), you can raise the flue gas temperature (→ Chapter 11.5, page 36).

11.5 Raising flue gas temperature

With a new boiler, the flue gas temperature when the boiler temperature is 176 °F (80 °C) will be around 320 – 356 °F (160 – 180 °C), depending on the boiler rating.

In two-stage operation the temperature of the flue gas is lower.

You can increase the flue gas temperature further by removing individual hot gas check plates and hot gas baffle plates or combinations of these.

You should only consider modifying the hot gas check plates as a last resort as once you have reduced the size of the hot gas check plates you cannot change this back.

- Take the boiler out of operation in accordance with the operating instructions.

You can increase the temperature of the flue gas by carrying out the following measures.

11.5.1 Removing heat exchanger baffles

For boilers with 7 – 11 boiler sections (819 – 1,553 MBH or 240 – 455 kW) an increase of the flue gas temperature can be achieved through **pair-wise** removal of the upper or lower flue gas baffles.

11.5.2 Removing hot gas check plates

You can significantly increase the flue gas temperature by removing the hot gas check plates.

- Take the hexagon socket screws out of the hot gas check plates on the left and right and remove the hot gas check plates (→ Fig. 68, [1 and 2]).

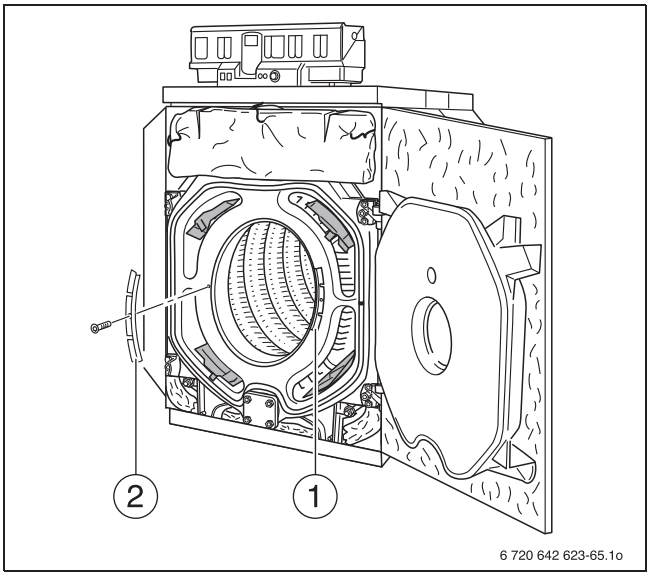

Fig. 68 Position of hot gas check plates

11.5.3 Increasing the flue gas temperature slightly

- Take the hexagon socket screw (→ Fig. 69, [3]) out of the hot gas check plate on the left and right (→ Fig. 69, [1 and 2]) and remove the hot gas check plates.
- Place the hot gas check plate on the support with the channels (→ Fig. 69, [1 and 2]) facing downwards. Knock off one segment of the left and right hot gas check plate with a hammer.
- Screw the hot gas check plate back onto the front section with the hexagon socket screws.

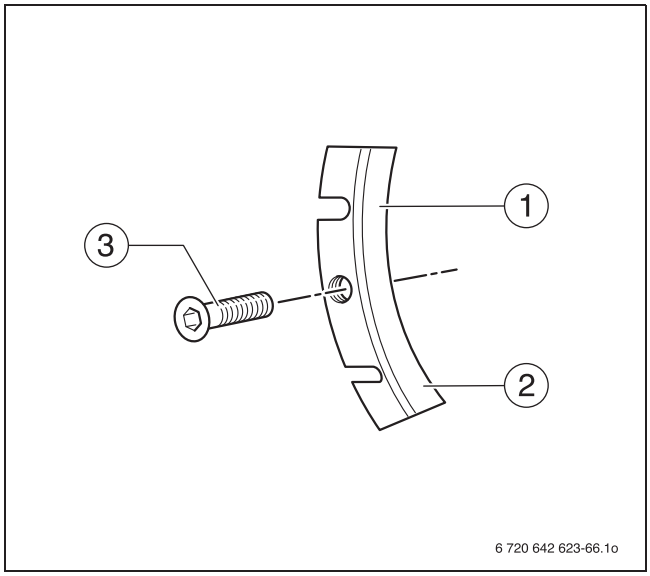

Fig. 69 Hot gas check plate

- If the flue gas temperature increases by an insufficient amount, the second segment on the hot gas check plates can be broken off in the same way, or all hot gas check plates can be removed as described above.

11.6 Commissioning log

The Logano G515 can be used with an oil or gas-fired burner. Fill in the commissioning log for the appropriate type of oil or gas burner carefully.

▶ Sign all start-up work as completed and enter the relevant date.

Commissioning operations		Individual steps	Comments (signature)
1.	Perform leak test of the entire system		
2.	Fill the heating system with water	→ page 35	
3.	Purge the air from the heating system		
4.	Perform the leak test if the boiler was assembled on-site	→ page 19	
5.	Record the filling water quantity and composition in the operator's log (included with the technical documentation).		
6.	Check position of heat exchanger baffles	→ page 22	
7.	Check the fuel line for leaks.		
8.	Start up the control panel	→ page 35	
9.	Initial burner start-up	See burner documentation	
10.	Check the flue gas temperature	→ page 36	
11.	Check vent pipe for leaks.		
12.	Check the boiler and flue gas side for leaks		
13.	Enter the fuel used in the table provided in the operating instructions.		
14.	Inform the owner and operator and hand over technical documentation		
15.	Confirm properly-completed commissioning		

Company stamp/signature/date

12 Shutting down the system

You can connect control panels of the 4000 series to the Logano G515. The shutting down process for the different types of control panel is the same.

NOTICE: Risk of system damage from freezing.

- The heating system can freeze up if it is disabled, e.g. shut down due to a fault.
- Protect the heating system from freezing when temperatures below freezing are expected. Drain the boiler water from the heating system at its lowest point using the drain valve. To do this, open the air vent at the highest point in the system.

12.1 Shutting down the heating system via the control panel

Shut down your boiler via the control panel. Shutting down the control panel automatically also switches off the burner.

- Shut off the fuel supply to the burner.

12.2 Shutting down the system in an emergency

In an emergency disconnect electrical power to the boiler and heating system by shutting off the emergency shut-off switch on the boiler or outside the boiler room, or disengage the heating system circuit breaker.

In other dangerous situations, immediately close the main fuel shut-off valve.

- Shut off the fuel supply to the burner.

13 System inspection and maintenance

13.1 General information

Offer your customer a maintenance contract covering annual inspection and servicing work as required. To find out what a contract for annual inspection and demand-based servicing covers, refer to Chapter 13.7, page 42.

DANGER: Risk of fatal injury from the explosion of flammable gases.

▶ Work on gas components must be carried out by trained and certified personnel only.

Cleaning and maintenance:

If heating oil is being used, cleaning and maintenance must be carried out twice a year. Depending on demand/run time, a shorter cleaning interval may be necessary.

Spare parts can be ordered from the Buderus spare parts catalog.

13.2 Why is regular maintenance important?

You should have your customer's system serviced for the following reasons:

- to achieve a high level of efficiency and to operate the system economically (low fuel consumption),
- to achieve a high level of operational safety and reliability
- to maintain a clean and environmentally-friendly combustion.

13.3 Cleaning the boiler with cleaning brushes

▶ Put the main power switch (→ Fig. 70, [1]) on the control panel in position “0”.

▶ Shut off the fuel supply to the burner.

▶ De-energize the system.

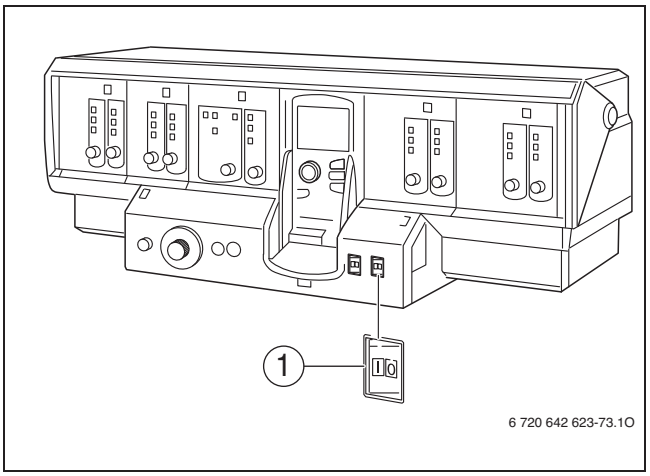

Fig. 70 Logamatic 4311 shown as an example

▶ Undo the four machine screws that fasten the burner door to the front section (→ Fig. 71, [1 to 4]).

▶ Swing out burner door.

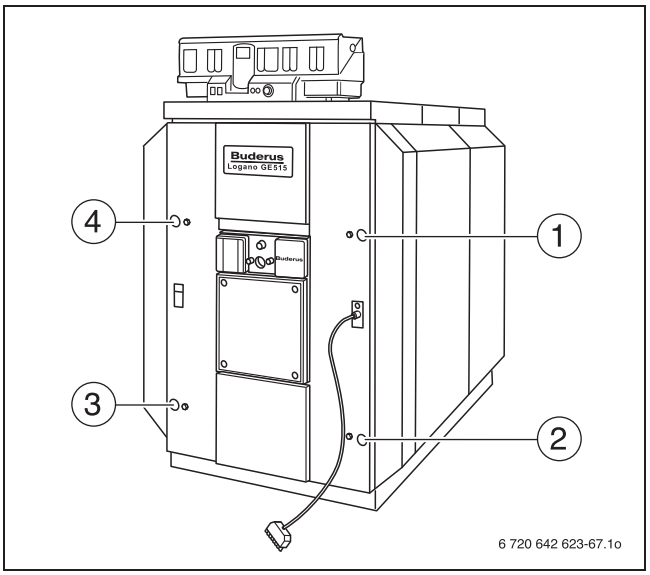

Fig. 71 Fastening the burner door

Boilers rated at 510 with 12 boiler sections are not equipped with flue gas baffle plates. Flue gas baffle plates are not used in boilers rated between 240 – 455 with 7 – 11 boiler sections (→ Chapter 7.8.5, page 22).

▶ Remove the flue gas baffles from the flue gas passages (→ Fig. 72, [1 to 4]).

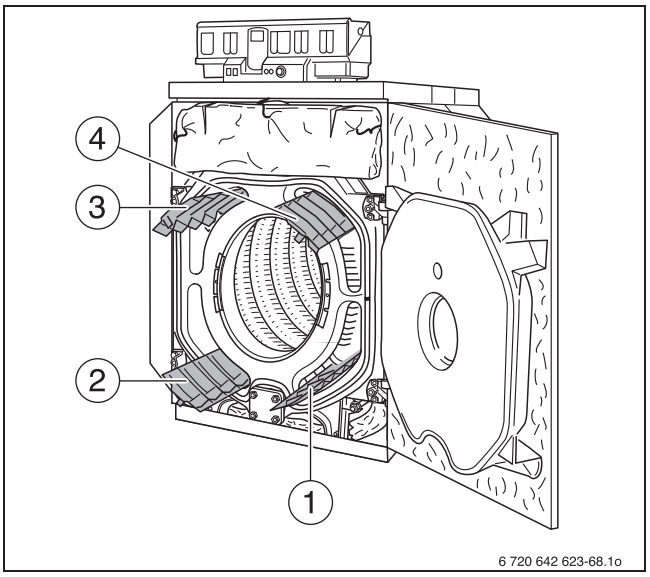

Fig. 72 Flue gas baffles, removing

The various brush types available from Buderus (accessories) are shown in Fig. 73.

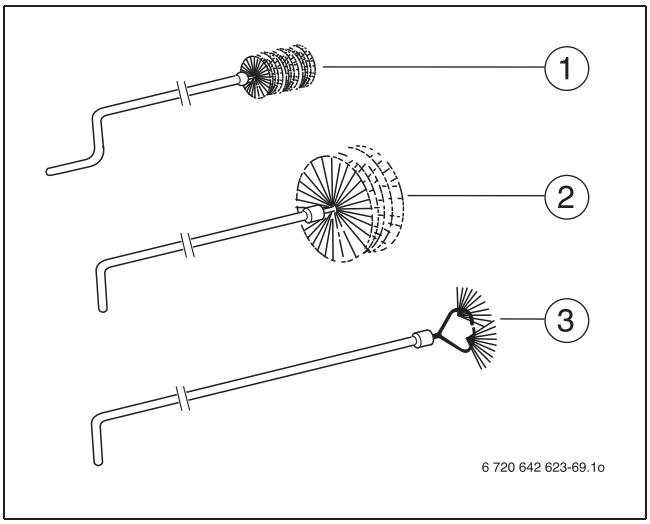

Fig. 73 Cleaning brushes

- ▶ Clean the flue gas passages, starting at the front and working toward the back with cleaning brushes 1 and 2 (→ Fig. 74, [1 and 3]).
- ▶ Clean the rear wall of the combustion chamber with cleaning brush 3.
- ▶ Clean the rest of the combustion chamber (→ Fig. 74, [2]) with cleaning brush 2.

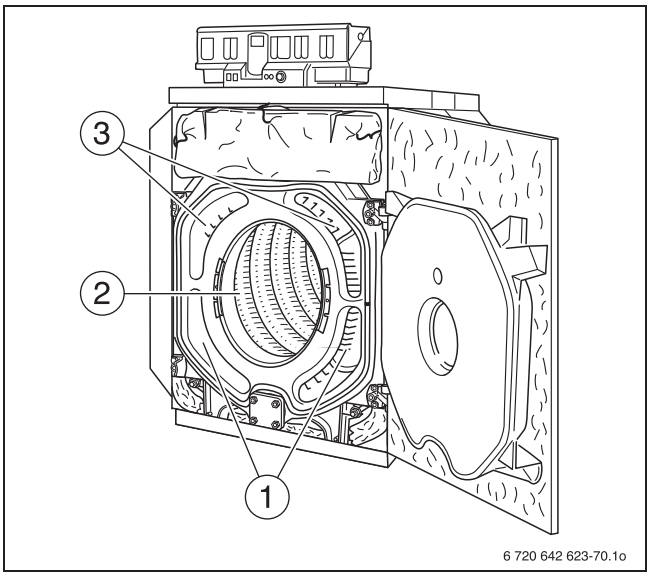

Fig. 74 Heat exchanger flue gas passages, cleaning

- ▶ Undo both self-tapping screws on the connecting plate and remove connecting plate.
- ▶ Remove the two self-tapping screws on the left and right-hand side of the lower rear boiler panel section.
- ▶ Lift up the bottom rear boiler panel sections slightly and take out toward the rear.
- ▶ Undo the spring hooks below the flue outlet, fold up the thermal insulation and attach via the spring hooks (→ Fig. 75, [1]).
- ▶ Remove the cleanout covers from the rear section (→ Fig. 75, [2]) and on the draft diverter (→ Fig. 75, [3]).
- ▶ Remove all loose combustion residues from the combustion chamber, the flue gas passages and the draft diverter.
- ▶ Check sealant ropes on the cleanout openings and burner door. Replace damaged or hardened sealant ropes.

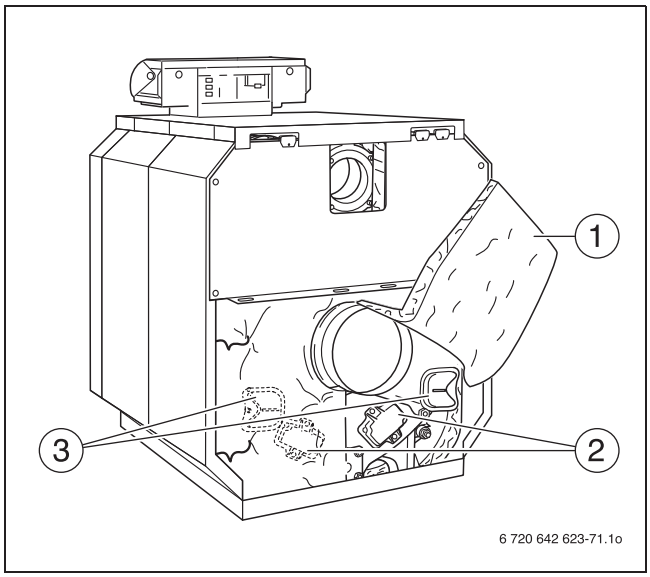

Fig. 75 Removing the cleanout cover.

You can obtain sealant ropes from your local Buderus wholesaler.

- ▶ Clean flue gas baffles with the cleaning brushes.
- ▶ Insert the flue gas baffle plates in the flue gas passages (→ Chapter 7.8.5, page 22).
- ▶ Fasten cleanout cover and tighten the screws evenly.
- ▶ Close the burner door and tighten the screws evenly.
- ▶ Fold the rear section thermal insulation down and pull together under the flue outlet using the spring hook (→ Fig. 76, [1]).

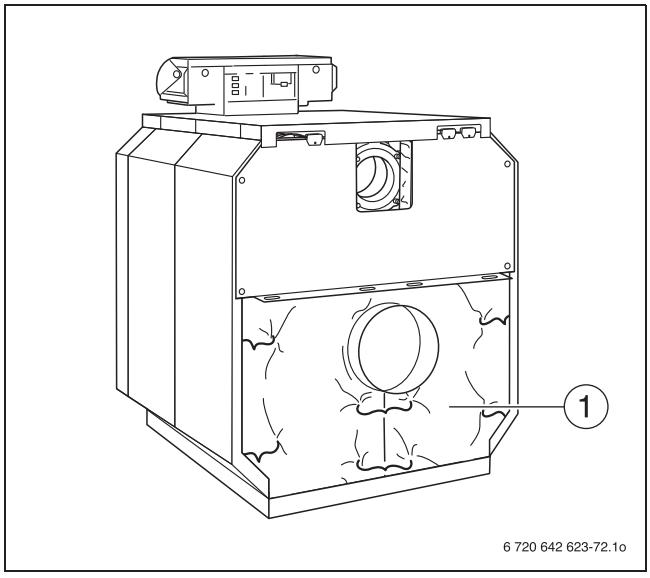

Fig. 76 Pull rear section thermal insulation together

- ▶ Hang the bottom rear boiler panel sections on the left and right into the slots in the folded edge of the upper rear boiler panel and the side panel and screw the connecting plate below the flue outlet onto the bottom rear boiler sections.

13.4 Wet-cleaning the boiler

When wet-cleaning, pick the cleaning agent based on the level of contamination.

Proceed with wet cleaning in the same order as described for cleaning with cleaning brushes (→ Chapter 13.3, page 39).

For wet-cleaning (chemical cleaning), observe the operating instructions of the relevant cleaning equipment and cleaning agent. It may be necessary to vary the wet-cleaning process from that described here.

- ▶ Select a cleaning agent that is appropriate for the type of contamination (soot or encrustation).
- ▶ Cover the control panel with foil to prevent penetration by the cleaning agent.
- ▶ Spray cleaning agent evenly from the top into the flue gas passages
- ▶ Heat up the boiler to a boiler water temperature of at least 158 °F (70 °C).
- ▶ Brush out the heat exchanger heater.

13.5 Checking the operating pressure

The operating pressure must be at least 15 psi (1 bar).

- ▶ Read the current operating pressure (psi) and temperature (°F (°C)) from the temperature/pressure gauge.
- ▶ If the operating pressure drops below 15 psi (1 bar), fill boiler water.

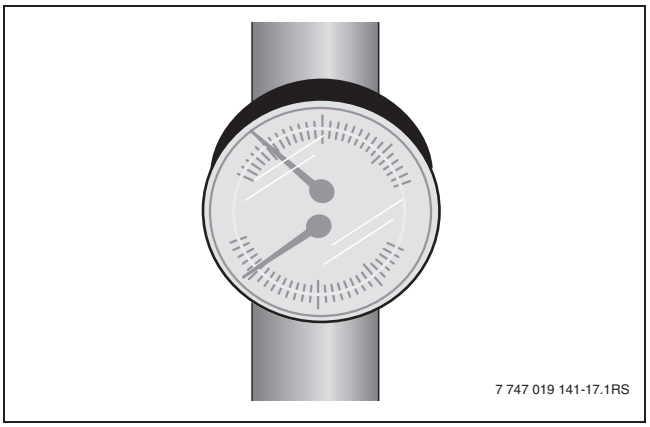

Fig. 77 Pressure/temperature gauge

13.6 Filling with boiler water and purging the system

NOTICE: Risk of system damage from temperature stresses.

- ▶ When the heating system is in operation, do not fill it via the boiler fill & drain valve. Instead, use the fill valve on the system side.

Bring the system up to the required operating pressure.

- ▶ Slowly fill the heating system via the on-site fill valve. During filling, observe the display (pressure gauge).
- ▶ Once the desired operating pressure is reached, stop the procedure.
- ▶ Purge the air from the heating system via the purge valves on the heating bodies.
- ▶ Fill with water again if the operating pressure drops as a result of purging the system.

NOTICE: Risk of system damage from frequent refilling.

- ▶ The system may be damaged, depending on water quality, by corrosion or scaling, if you frequently need to re-fill your system with make-up water.
- ▶ Ensure that your heating system is bled.
- ▶ Check the heating system for leaks and the function of the expansion vessel.

13.7 Inspection and maintenance logs

The inspection and maintenance logs provide an overview of the required inspection and maintenance work.

▶ Initial and date the inspection operations completed.

The inspection and maintenance logs can also be used as templates.

Inspection work		Page	Date:_____	Date:_____
1.	Check general condition of heating system		☐	☐
2.	Visual inspection and function check of the heating system		☐	☐
3.	Check fuel and water-carrying components of the system for: • Leaks during operation • Visible signs of corrosion • Signs of aging		☐	☐
4.	Check the combustion chamber and heating surfaces for contamination. Shut down the heating system first.	→ 39	☐	☐
5.	Check the burner (→ burner documentation)		☐	☐
6.	Check the flue gas and venting system for proper operation and safety (see → burner documentation)		☐	☐
7.	Check the operating pressure and inlet pressure of the diaphragm expansion vessel for heating systems	→ 41	☐	☐
8.	Check the function of indirect-fired heater and rod (→ tank documentation)		☐	☐
9.	Check the control panel setting (see → control panel documentation)		☐	☐
10.	Record the final checks of the inspection work, incl. measurements and test results		☐	☐
	Confirm professional inspection		Company stamp/signature	Company stamp/signature

If during inspection work conditions are identified that require additional service and maintenance, perform this work on an as-needed basis. If make-up water is added, the quality of this water must correspond to the specifications in the enclosed operating manual.

	Date:_____	Date:_____	Date:_____	Date:_____
1.	☐	☐	☐	☐
2.	☐	☐	☐	☐
3.	☐	☐	☐	☐
4.	☐	☐	☐	☐
5.	☐	☐	☐	☐
6.	☐	☐	☐	☐
7.	☐	☐	☐	☐
8.	☐	☐	☐	☐
9.	☐	☐	☐	☐
10.	☐	☐	☐	☐
	Company stamp/signature	Company stamp/signature	Company stamp/signature	Company stamp/signature

Additional maintenance work as-needed		Page	Date:_____	Date:_____
1.	Shut down the heating system	→ 38	☐	☐
2.	Remove and clean heat exchanger baffles	→ 39	☐	☐
3.	Clean the flue gas passages (heating surfaces) and flue gas baffles	→ 40	☐	☐
4.	Clean the combustion chamber	→ 40	☐	☐
5.	Clean the draft diverter	→ 40	☐	☐
6.	Insert the flue gas baffles	→ 40	☐	☐
7.	Check gaskets/sealant ropes on the burner and burner door and replace if required (see burner documentation)		☐	☐
8.	Commissioning the heating system	→ 35	☐	☐
9.	Record the final checks of the maintenance work, incl. measurements and test results		☐	☐
10.	Check safe and proper operation		☐	☐
	Confirm professional inspection		Company stamp/signature	Company stamp/signature

	Date:_____	Date:_____	Date:_____	Date:_____
1.	☐	☐	☐	☐
2.	☐	☐	☐	☐
3.	☐	☐	☐	☐
4.	☐	☐	☐	☐
5.	☐	☐	☐	☐
6.	☐	☐	☐	☐
7.	☐	☐	☐	☐
8.	☐	☐	☐	☐
9.	☐	☐	☐	☐
10.	☐	☐	☐	☐
	Company stamp/signature	Company stamp/signature	Company stamp/signature	Company stamp/signature

14 Troubleshooting burner faults

Heating system faults are shown on the display of the control panel. You will find detailed information regarding fault displays in the service instructions for the relevant control panel. The burner fault is also indicated by a fault lamp on the burner.

NOTICE: Risk of system damage from freezing.
The heating system can freeze up in cold weather if it has been disabled due to a fault shutdown.

- ▶ Rectify the fault immediately and restart the heating system.
- ▶ If this is not possible, drain the heating and DHW from the system side at the lowest point.

Troubleshooting burner faults

- ▶ Press the burner reset button (see burner operating instructions).

NOTICE: Risk of system damage from too many resets.

- ▶ The burner ignition transformer may be damaged if you press the reset button more than three times in succession when the burner refuses to start.
- ▶ Do not attempt to remedy the fault by pressing the reset button more than three times in succession.

If the burner does not restart after three attempts, refer to the technical documentation provided with the burner to find out how to reset it.

15 Spare Parts

- Request spare parts with name and part number using the spare parts list.

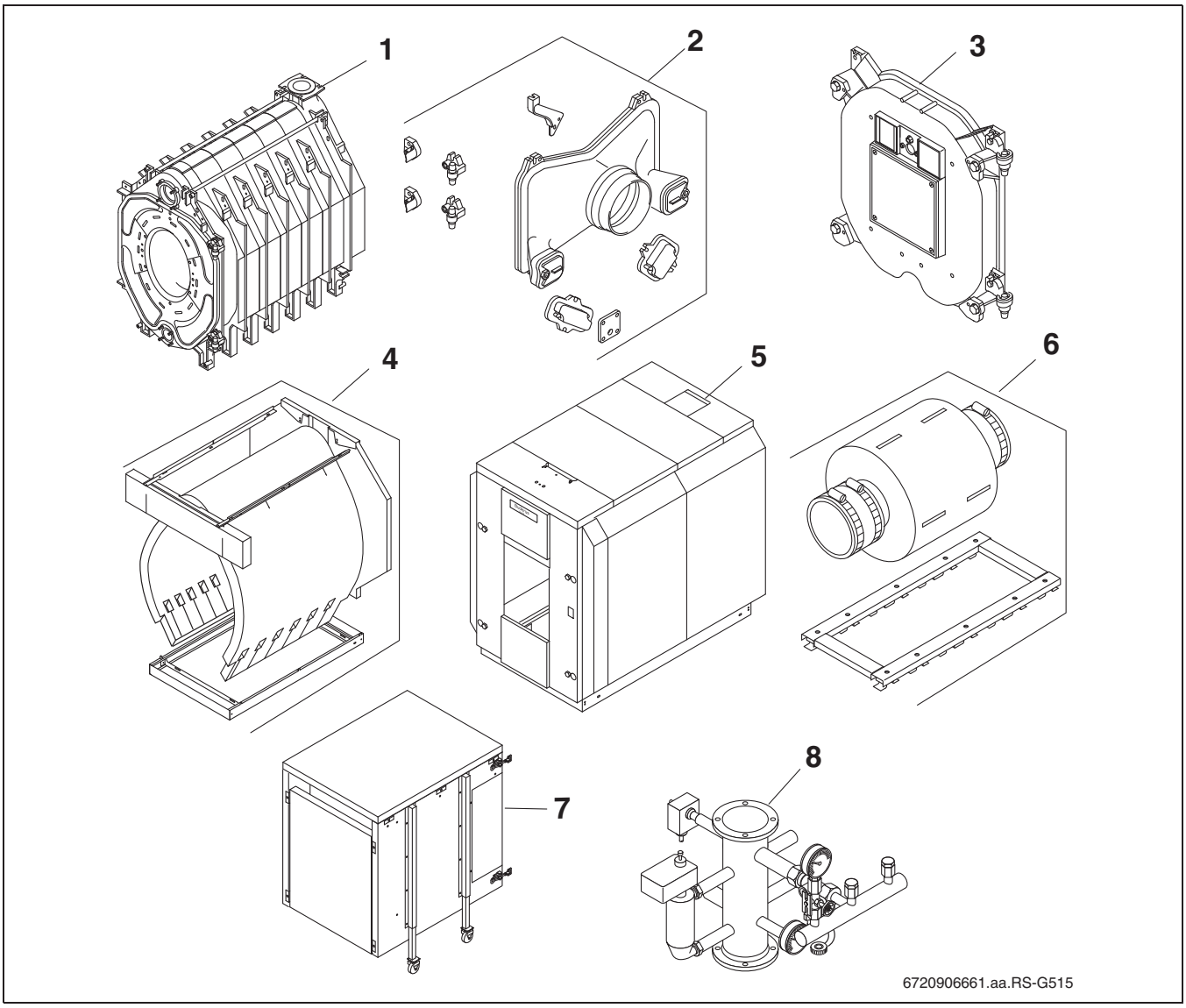

Fig. 78 Spare part groups Logano G515

Item (→ Fig. 78)	Designation	Spare parts list
1	Group 1 – boiler block - front	→ Page 47
2	Group 2 – boiler block - rear	→ Page 50
3	Group 3 – burner door	→ Page 52
4	Group 4 – jacket - fastening	→ Page 54
5	Group 5 – jacket - sheetmetal parts	→ Page 56
6	Group 6 – pedestal - silencer	→ Page 58
7	Group 7 – burner cover	→ Page 60
8	Group 8 – safety group	→ Page 62

Table 14 Spare part groups Logano G515

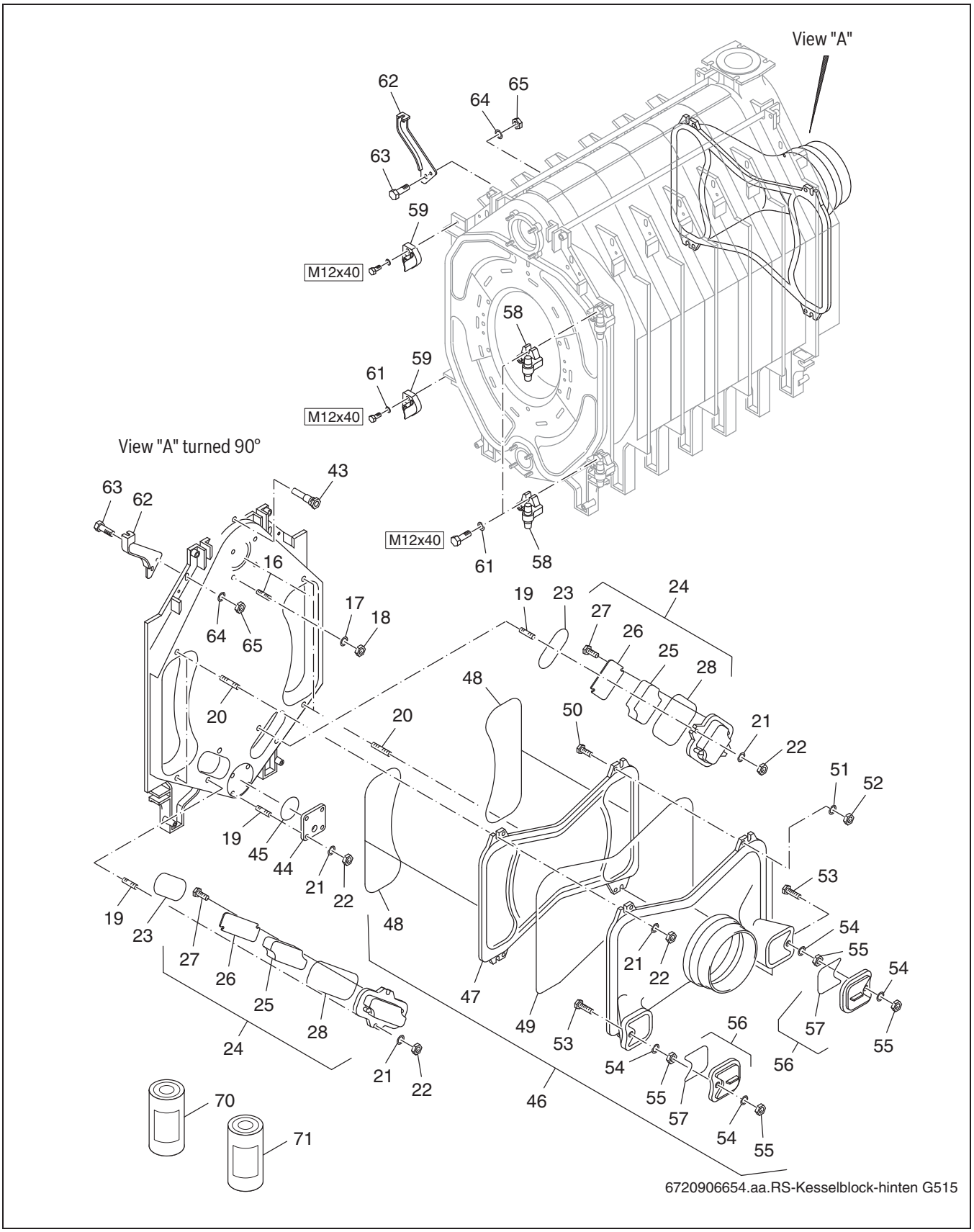

Fig. 79 Group 1 – boiler block - front Logano G515

Item (→ Fig. 79)	Designation	Order number
1	Boiler block unassembled – 7 segments	5 086 720
	Boiler block unassembled – 8 segments	5 086 722
	Boiler block unassembled – 9 segments	5 086 724
	Boiler block unassembled – 10 segments	5 086 726
	Boiler block unassembled – 11 segments	5 086 728
	Boiler block unassembled – 12 segments	5 086 730
2	Front segment G515	8 718 572 188 0
3	Studs DIN939 M12x35 5.6	3 719 184
4	Washer DIN125-A13-A3K	5 883 276
5	Hexagon nuts ISO4032 M12 8 A3K	5 090 068
6	Threaded stud DIN939 M16x45 5.6	3 719 328
7	Washer DIN125-A17-A3K	3 869 840
8	Hexagon nut DIN555 M16	82 585 200
9	Stop plate [5257820]	8 718 570 847 0
11	Intermediate section G515	8 718 572 189 0
12	Boiler nipple 181/170 Sz 4	7 747 024 979
13	Boiler nipple 82/50 Sz 1	7 747 024 965
14	Sealant rope D15x4300 20 KMVk Pack A=2	7 747 013 784
	Sealant rope D15x4300 20 KMVk Pack B=3	7 747 013 785
	Sealant rope D15x5050 20 KMVk Pack A=2	7 747 013 787
	Sealant rope D15x5050 20 KMVk Pack B=3	7 747 013 788
15	Rear section G515	8 718 572 190 0
16	Tie rod M16x1165 (for 7 segments)	5 413 070
	Tie rod M16x1365 (for 8 segments)	5 420 100
	Tie rod M16x1510 (for 9 segments)	5 504 112
	Tie rod M16x1675 (for 10 segments)	5 526 040
	Tie rod M16x1845 (for 11 segments)	5 526 050
	Tie rod M16x2015 (for 12 segments)	5 526 060
17	Spring package compl. for tie rods	5 413 202
18	Hexagon nuts ISO4032 M16 8 A3K	82 585 200
19	Washer DIN125-A17-A3K	3 869 840
20	Supply pipe G515 7-pc	5 436 400
	Supply pipe G515 8-pc	5 436 402
	Supply pipe G515 9-pc	5 436 404
	Supply pipe G515 10-pc	5 436 736
	Supply pipe G515 11-pc	5 436 738
	Supply pipe G515 12-pc	5 436 740
21	Flange cover square 170mm	5 428 121
22	Gasket D125x170x1.5mm (2x)	8 718 572 753 0
23	Washer DIN125-A17-A3K	3 869 840
24	Hexagon nuts ISO4032 M16 8 A3K	82 585 200
25	Flue gas baffle top right 680mm	5 265 206
	Flue gas baffle top right 425mm	5 265 210
26	Flue gas baffle top right 425mm long	5 265 212
	Flue gas baffle top left 680mm long	5 265 220
27	Flue gas baffle bottom right 680mm long	5 265 204
	Flue gas baffle bottom right 425mm	5 265 214
28	Flue gas baffle bottom right 425mm	5 265 216
	Flue gas baffle bottom right 680mm	5 265 218
29	Sealant rope 18x2900mm long	63 020 973
30	Flange cover square 110mm	5 428 081

Table 15 Group 1 – boiler block - front Logano G515

Item (→ Fig. 79)	Designation	Order number
31	Gasket D72x96x1.5mm	8 718 571 260 0
45	Sealant graphite treated with linseed oil 450 g can	8 718 571 927
46	Primer 181, 12.5 oz (370 ml) in 17 oz (500 ml) can	5 909 922
	Fittings G515 7-pc loose spare	5 621 600
	Fittings G515 8-pc loose spare	5 621 602
	Fittings G515 9-pc loose spare	5 621 604
	Fittings G515 10-pc loose spare	5 621 606
	Fittings G515 11-pc loose spare	5 621 608
	Fittings G515 12-pc loose spare	5 621 610
	Sealant rope 18x3800 GP	63 020 975

Table 15 Group 1 – boiler block - front Logano G515

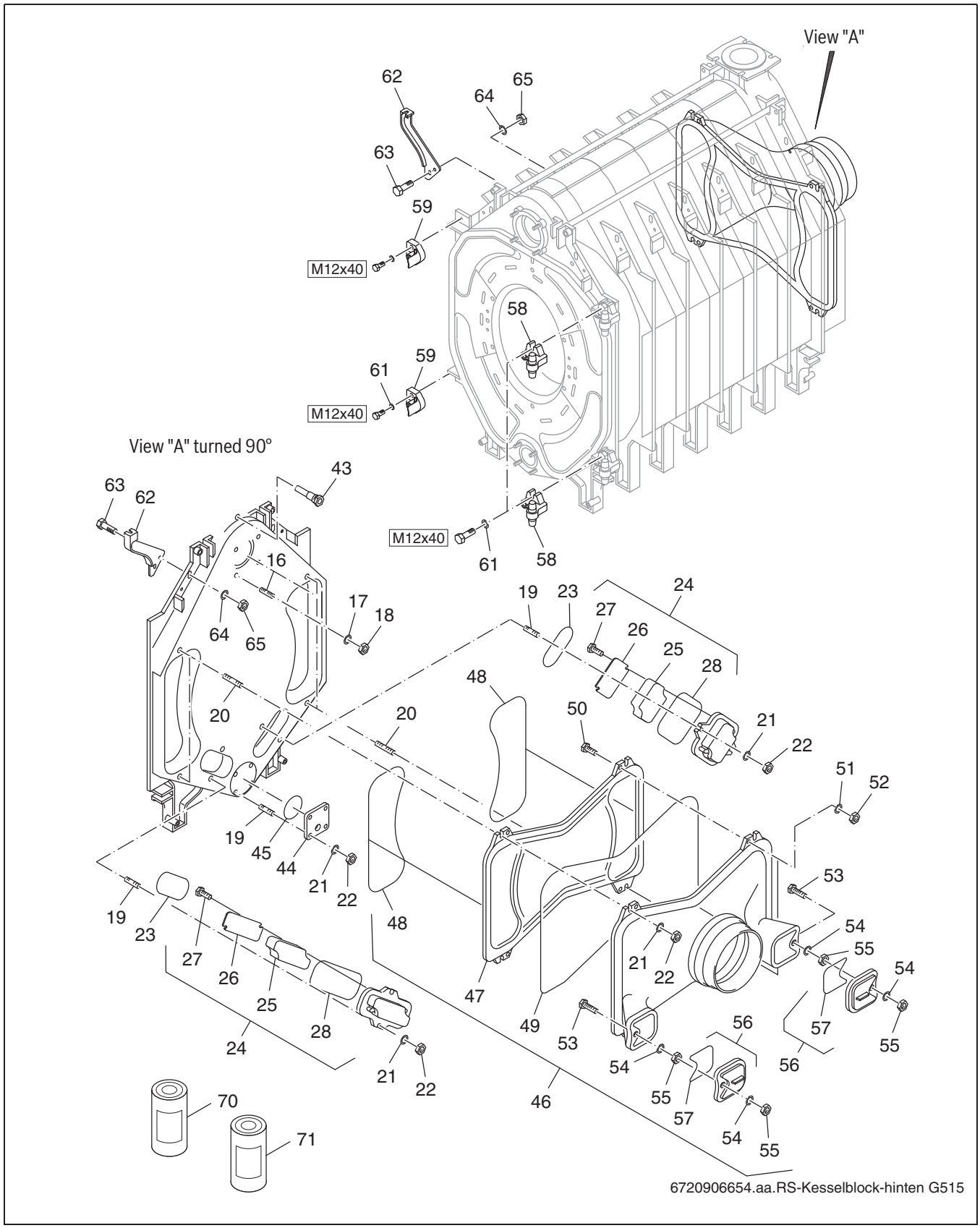

Fig. 80 Group 2 – boiler block - back Logano G515

Item (→ Fig. 80)	Designation	Order number
16	Threaded stud DIN939 M16x45 5.6	3 719 328
17	Washer DIN125-A17-A3K	3 869 840
18	Hexagon nuts ISO4032 M16 8 A3K	82 585 200
19	Threaded stud DIN939 M12x35 5.6	3 719 184
20	Threaded stud DIN939 M12x60 5.6	3 719 204
21	Washer DIN125-A13-A3K	5 883 276
22	Hexagon nuts ISO4032 M12 8 A3K	5 090 068
23	Sealant rope GP10x1070mm long	63 020 962
24	Cleanout cover left/right cpl G515	5 371 615
25	Thermal insulation cleanout cover G515	5 078 718
43	Sensor well R3/4" (100 mm)	5 446 065
44	Threaded flange square 110mm 3/4"	5 430 056
45	Gasket D72x96x1.5mm	8 718 571 260 0
46	Draft diverter G515 VE	5 321 792
47	Rear panel draft diverter G515 cpl	5 078 742
48	Sealant rope GP14x1650mm long	63 020 965
49	Sealant rope D15x4300 KMV Pack A =2 rolls	5 830 260
50	Hex-head bolt ISO4017 M8x50 8.8	5 090 330
51	Washer DIN125 A8.4 A3K (10x)	8 718 571 269 0
52	Hex nut DIN6923 M8 A3K (10x)	8 718 571 267 0
53	Hex-head bolt ISO4017 M12x55 8.8	5 090 262
54	Washer DIN125-A13-A3K	5 883 276
55	Hexagon nuts ISO4032 M12 8 A3K	5 090 068
56	Cleanout cover compl. for the draft diverter	5 371 906
57	Sealant rope GP10x1070mm long	63 020 962
58	Hinge painted G515	5 327 432
59	Locking bracket painted G515	5 928 700
61	Washer DIN125-A13-A3K	5 883 276
62	Console cladding deburred G515	5 928 706
63	Hex bolts M8x30 set 10 pcs	63 027 500
64	Washer DIN125 A8.4 A3K (10x)	8 718 571 269 0
65	Hex nut DIN6923 M8 A3K (10x)	8 718 571 267 0
70	Gasket kit PK-W11 310 ml cartridge	2 037 038
71	Sealing compound brown	63 014 361
	Installation materialG515 VE	5 015 940
	Maintenance package G515	63 006 596

Table 16 Group 2 – boiler block - back Logano G515

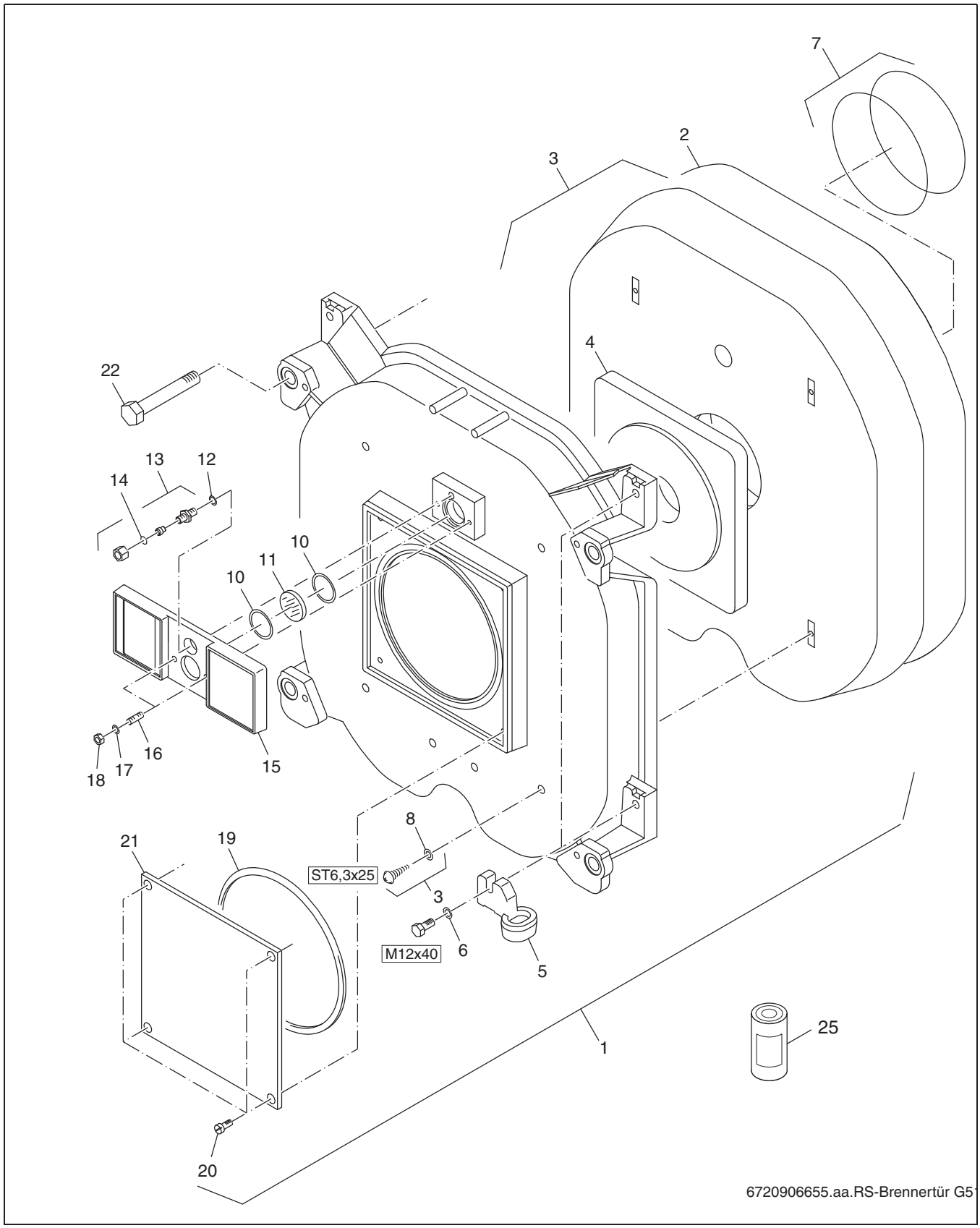

Fig. 81 Group 3 – burner door Logano G515

Item (→ Fig. 81)	Designation	Order number
1	Burner door compl. G515	63 015 444
2	Sealant rope 18x2900mm long (for burner door)	63 020 973
3	Thermal insulation br door G515 Board607	63 002 424
4	Insulating shield G505/G515/SB605/SB615	63 004 307
5	Hinge eyelet painted G515	5 327 430
6	Washer DIN125-A13-A3K	5 883 276
7	Insulation ring burner door G515 isoglas	5 333 046
8	Washer DIN9021 A6,4 A3K	5 264 166
10	Gasket D42x52x1.5mm	5 752 520
11	Glass pane D49.5x5mm (1x9)	7 747 021 871
12	Seal ring 13x18x1.5	5 883 094
13	Threaded pipe adapter GE 10-lr Ermeto	5 802 753
14	Gasket D13.5x1mm	5 752 220
15	Inspection hole cover G515 paint 70003150	5 438 604
16	Threaded stud DIN939 M8x25mm (4x)	8 718 571 262 0
17	Washer DIN125 A8.4 A3K (10x)	8 718 571 269 0
18	Hex nut DIN6923 M8 A3K (10x)	8 718 571 267 0
19	Sealant rope GP10x1070mm long	63 020 962
20	Hex-head bolt DIN6921 M10x25 (10x)	8 718 575 500 0
21	Burner plate blind 10x320x320mm	5 431 165
22	Hex-head bolt M16x140 (DIN931), black	80 080 136
25	Sealing compound brown	63 014 361

Table 17 Group 3 – burner door Logano G515

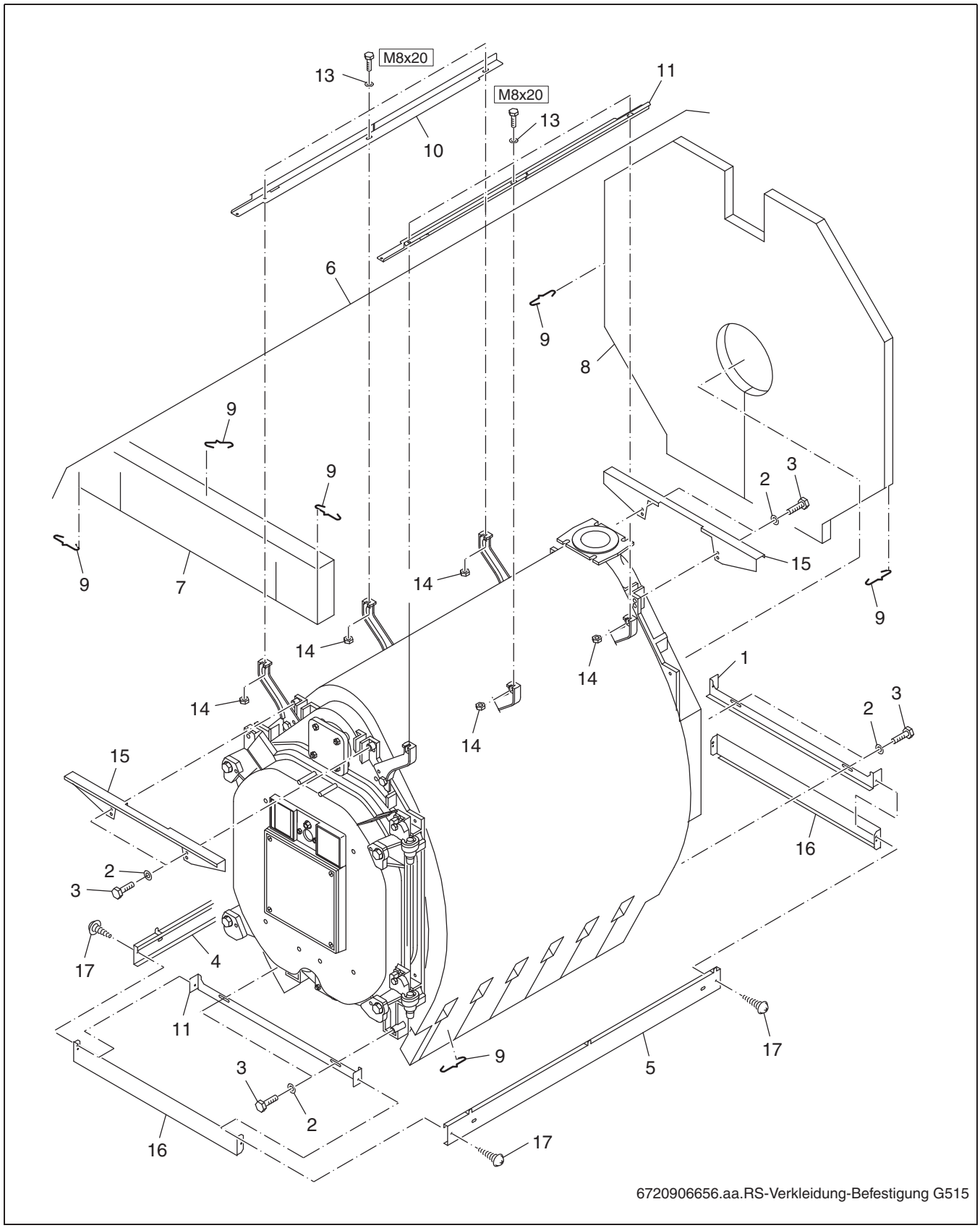

Fig. 82 Group 4 – jacket - fastening Logano G515

Item (→ Fig. 82)	Designation	Order number
1	Bottom profile rail G515	5 078 620
2	Washer DIN125 A8.4 A3K (10x)	8 718 571 269 0
3	Hex-head bolt ISO4017 M8x16 8.8	5 090 124
4	Base left compl. 1315mm long	5 078 642
	Base left compl. 1485mm long	5 078 644
	Base left compl. 1655mm long	5 078 646
	Base left compl. 1825mm long	5 078 648
	Base left compl. 1995mm long	5 078 650
	Base left compl. 2165mm long	5 078 652
5	Base right compl. 1315mm long	5 078 630
	Base right compl. 1485mm long	5 078 632
	Base right compl. 1655mm long	5 078 634
	Base right compl. 1825mm long	5 078 636
	Base right compl. 1995mm long	5 078 638
	Base right compl. 2165mm long	5 078 640
6	Thermal insulation 7 sections G515	5 078 440
	Thermal insulation 8 sections G515	5 078 442
	Thermal insulation 9 sections G515	5 078 444
	Thermal insulation 10 sections G515	5 078 446
	Thermal insulation 11 sections G515	5 078 448
	Thermal insulation 12 sections G515	5 078 450
7	Thermal insulation for front cover G515	63 013 247
8	Thermal insulation for rear panel G515	63 013 246
9	Retaining spring (10x)	7 747 016 084
10	Profile rail left top compl. 1280mm long	5 078 672
	Profile rail left top compl. 1450mm long	5 078 674
	Profile rail left top compl. 1620mm long	5 078 676
	Profile rail left top compl. 1790mm long	5 078 678
	Profile rail left top compl. 1960mm long	5 078 680
	Profile rail left top compl. 2130mm long	5 078 682
11	Profile rail right top compl. 1280mm long	5 078 660
	Profile rail right top compl. 1450mm long	5 078 662
13	Washer DIN125 A8.4 A3K (10x)	8 718 571 269 0
14	Hex nut DIN6923 M8 A3K (10x)	8 718 571 267 0
15	Top cross member G515	5 078 624
16	Base cross cpl G515	5 078 698
17	Flat-head screw ST3.9x9.5 A3T (10x)	7 747 026 999

Table 18 Group 4 – jacket - fastening Logano G515

side panel								
segments / Pos.			7	8	9	10	11	12
12	A	614mm	4		4		4	
13	B	699mm		4		4		4
14	C	339mm			2	2	4	4

cover							
segments / Pos.		7	8	9	10	11	12
17	509mm	1	2	1	2	1	2
18	339mm	1	0	2	1	3	2

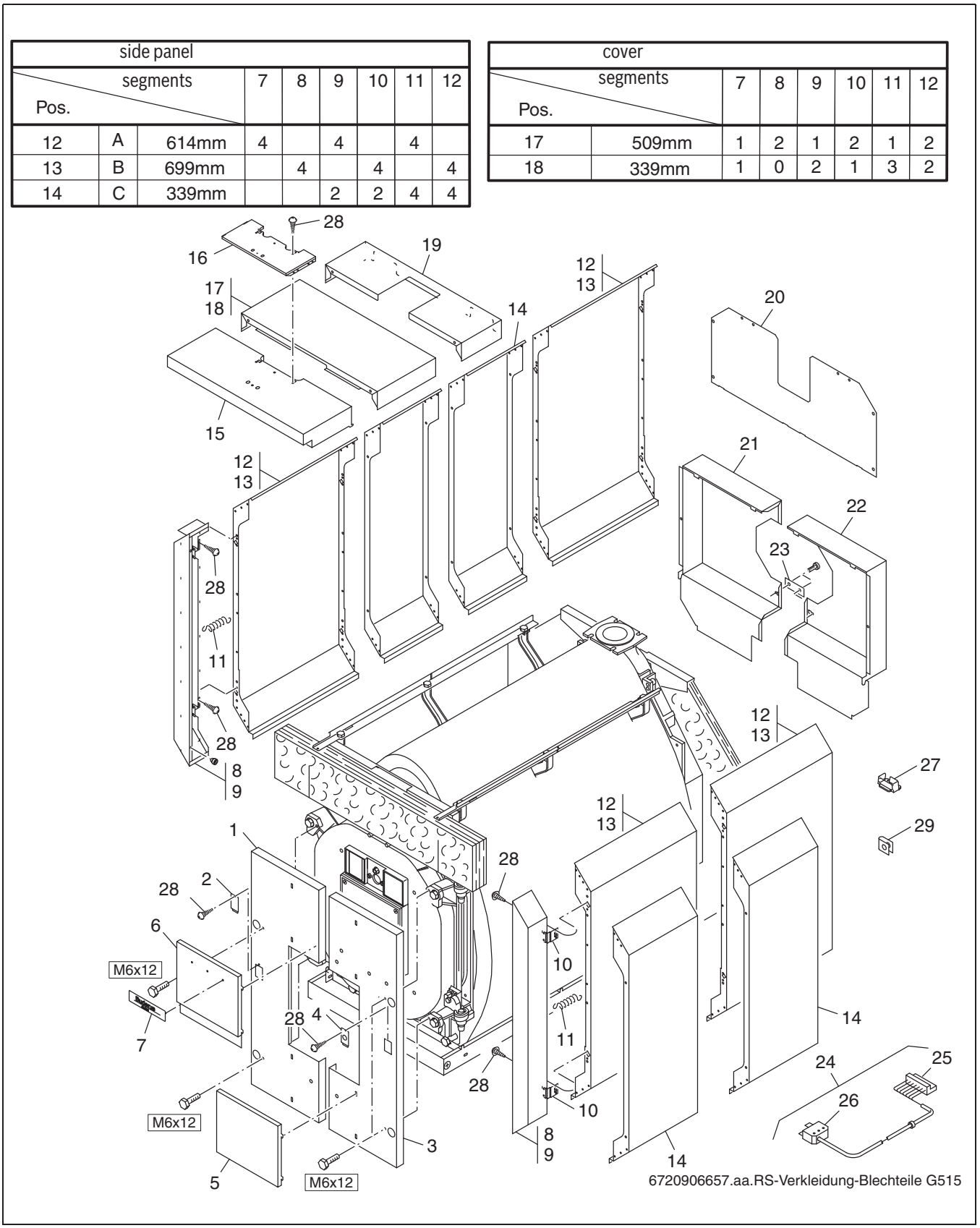

Fig. 83 Group 5 – jacket - sheetmetal parts Logano G515

Item (→ Fig. 83)	Designation	Order number
1	Front cover II G515	63 029 196
2	Conduit shield (blue)	63 045 229
3	Front cover rt G515	63 029 193
4	Conduit slotted (blue) (1x)	63 045 226
5	Cover bott cpl G515	5 078 714
6	Cover top cpl G515	5 078 712
7	Appliance label Buderus Logano G515 (>4/1999)	67 902 827
	Appliance label Logano plus G515 (>4/1999)	67 902 849
8	Flap cpl G515	5 078 690
9	Thermal insulation f. flap right+left 40x100x1200	5 078 508
10	Piano hinge	63 013 120
11	Tension spring f. front jacket G515	5 078 880
12	Side panel compl. 614lg G515	63 029 214
13	Side panel compl. 699lg G515	63 029 213
14	Side panel compl. 339lg G515	63 029 215
15	Front top panel compl.	5 078 701
16	Adapter plate for control panel	63 018 642
17	Cover middle compl. 509mm long	5 078 704
18	Cover middle compl. 339mm long	5 078 702
19	Cover rear compl.	5 078 706
20	Rear panel top G515	5 078 692
21	Rear panel left bottom cpl G515	5 078 694
22	Rear panel rt bottom cpl G515	5 078 696
23	Connection strip 80x30x0.75mm	63 001 624
24	Burner connection cable compl. 3200mm long	7 060 992
25	Connection terminal 7-pin green BR 1 burner	7 747 023 989
26	Connector part ST18/7 silver-plated	67 903 164
27	Cable clamp	7 060 754
28	Flat-head screw ST3.9x9.5 A3T (10x)	7 747 026 999
29	Snap nut 4.8-A3KSNU5743	5 834 364
	Installation material G515	5 078 716

Table 19 Group 5 – jacket - sheetmetal parts Logano G515

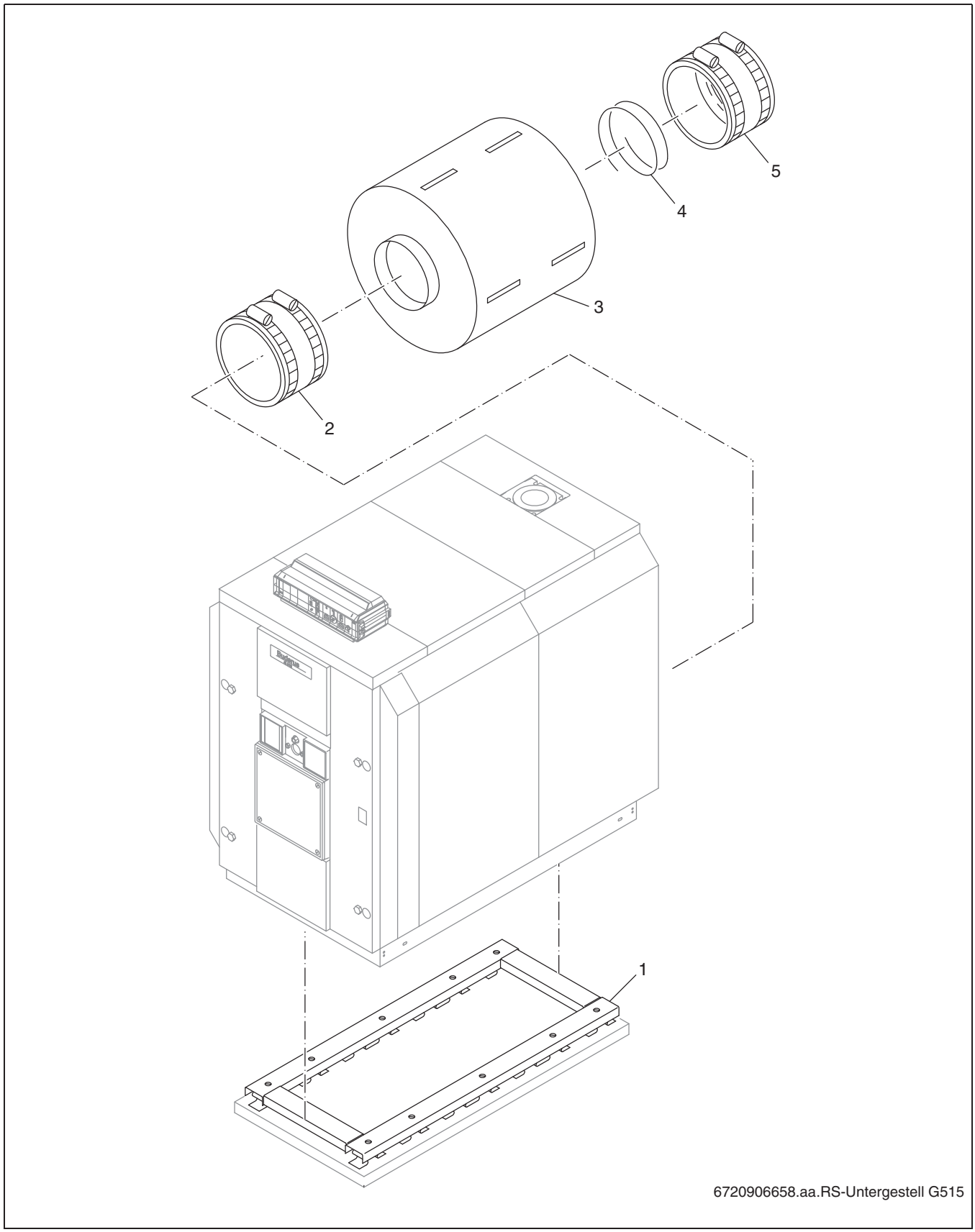

Fig. 84 Group 6 – pedestal - silencer Logano G515

Item (→ Fig. 84)	Designation	Order number
1	Sound-absorbing boiler base for G515. Sz 240	5 093 400
	Sound-absorbing boiler base for G515. Sz 295	5 093 402
	Sound-absorbing boiler base for G515. Sz 350	5 093 404
	Sound-absorbing boiler base for G515. Sz 400	5 093 406
	Sound-absorbing boiler base for G515. Sz 455	5 093 408
	Sound-absorbing boiler base for G515. Sz 510	5 093 410
2	Vent pipe sealing collar DN250 neutr	54 004 294
3	Vent pipe silencer, steel, DN 250	5 074 550
4	Sealant rope 10x2000 GP	63 020 963
5	Vent pipe sealing collar DN250	5 354 038

Table 20 Group 6 – pedestal - silencer Logano G515

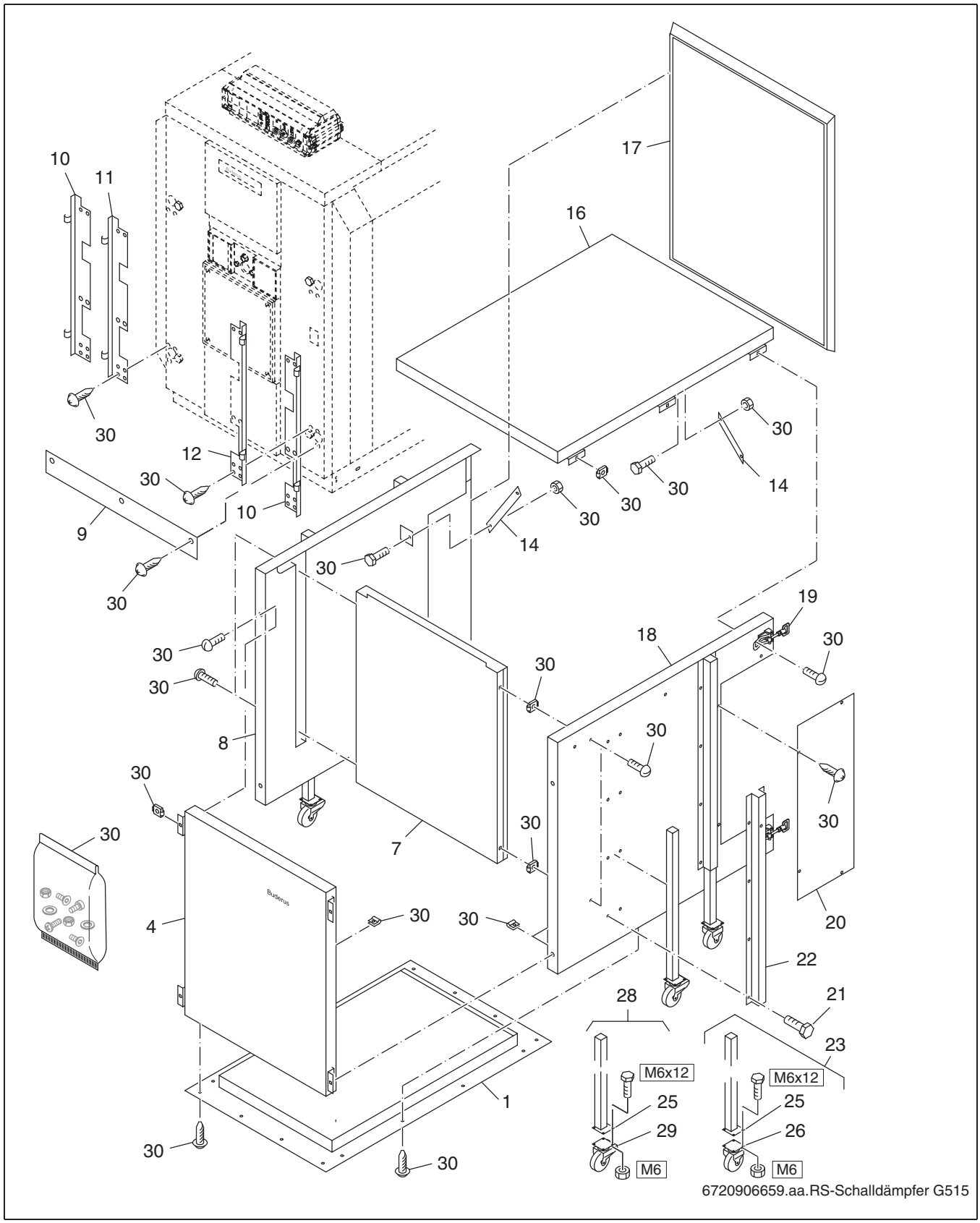

Fig. 85 Group 7 – burner cover Logano G515

Item (→ Fig. 85)	Designation	Order number
1	Bottom compl. 790x885mm size 1.1 (type 1.2)	5 414 718
	Bottom compl. 820x1165mm (type 2.2)	5 414 770
4	Front cover compl. 570x700mm (type 1.2)	5 414 683
	Front cover compl. 730x750mm (type 2.2)	5 414 780
7	Baffle compl. 530x795mm (type 1.2)	5 414 688
	Baffle compl. 670x825mm (type 2.2)	5 414 784
8	Side panel left compl. 650x890mm (type 1.2)	5 414 776
	Side panel left compl. 830x1170mm (type 2.2)	5 414 778
9	Cover bottom cpl 2x50.5x830mm (type 2.2)	5 078 740
10	Cover right/left compl. 720mm long (type 1.2)	5 928 150
11	Cover left cpl 90x900mm (type 2.2)	5 928 154
12	Cover right cpl 90x900mm (type 2.2)	5 928 152
14	Brace 40x210mm	5 414 703
16	Cover 800x890mm size 1.1 (type 1.2)	5 414 693
	Cover 830x1170mm (type 2.2)	5 414 786
17	Edge protector 3000mm long	5 972 800
18	Side panel R.h. 650x890mm (type 1.2)	5 414 772
	Side panel right compl. 650x890mm	5 414 774
19	Box closure	5 755 060
20	Locking plate 280x400mm (type 1.2)	5 414 796
	Locking plate 280x580mm (type 2.2)	5 414 802
22	Attachment bracket 730mm long (type 2.2)	5 414 788
	Attachment bracket 134x550mm (type 1.2)	5 414 790
23	Roller leg rear compl. 850mm long	5 928 158
25	Shaft 745mm long	5 928 162
26	Fixed roller AB/75 blue-gray	5 755 050
28	Roller leg compl. with swivel roller	5 928 156
29	Swivel roller A2K/75	5 755 055
30	Installation material burner sound-damping cover	5 158 222
	Moltoprene knob plate 50x1000x2000mm	5 678 100

Table 21 Group 7 – burner cover Logano G515

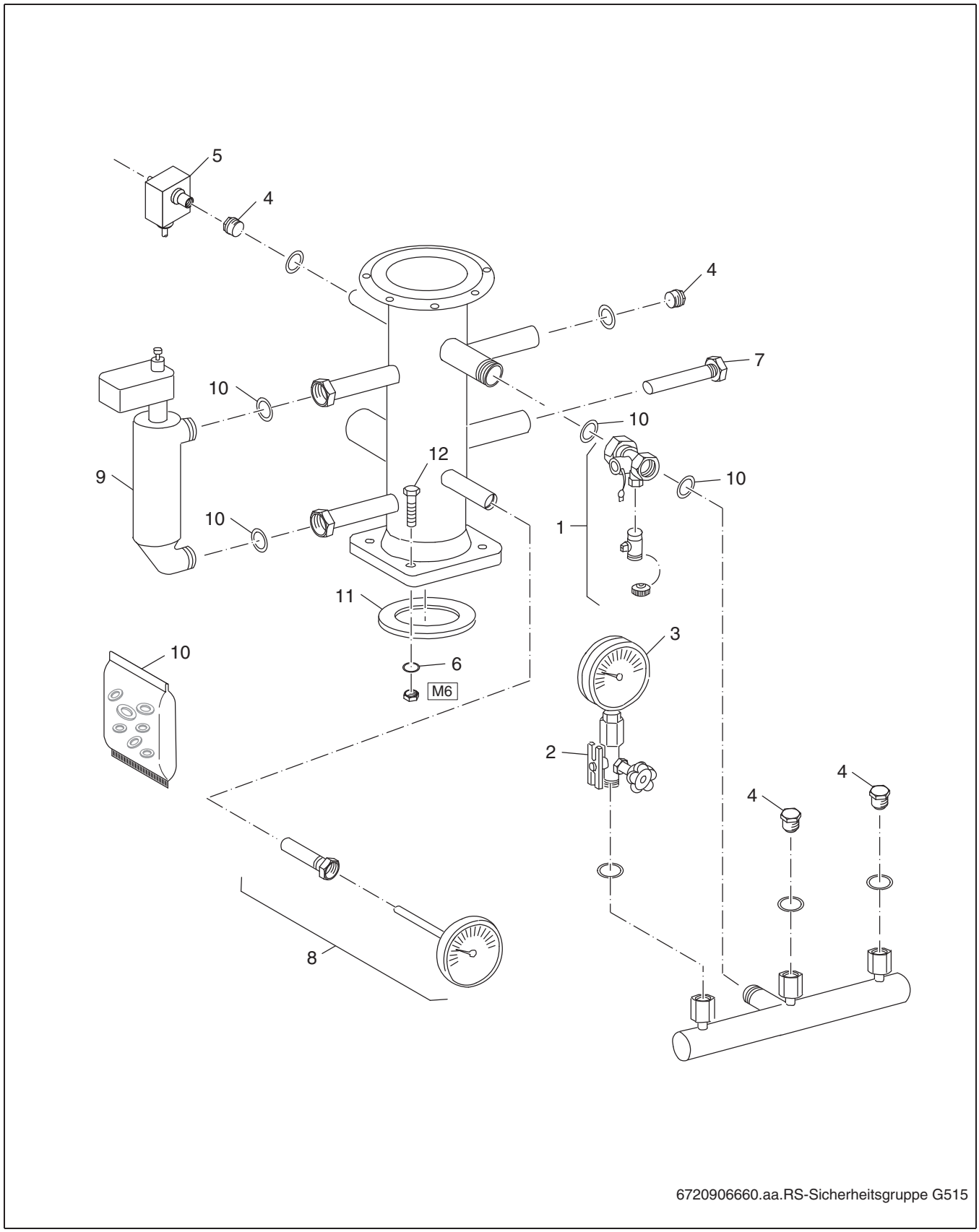

Fig. 86 Group 8 – safety group Logano G515

Item (→ Fig. 86)	Designation	Order number
1	Cap valve with drain & fill valve	5 639 600
2	OV pressure gauge block valve 1/2"AG, PN250,	81 504 600
3	Röhrenfeder pressure gauge d: 100mm, 0-10bar	81 188 605
4	Set of grommets for safety armatures	5 639 660
5	Pressure regulator cpl minimal f. G515 pack	5 639 612
6	Washer DIN125-A17-A3K	3 869 840
7	Sensor well G1/2" 160mm long	63 004 634
8	Thermometer D100,G1/2, 0-120degrees C,160lg	5 639 624
9	Water level limiter SYR 933, 20, 11	8 718 575 403 0
10	Gasket set KSG	5 639 634
11	Seal DIN2690 DN65 2 mm	81 363 040

Table 22 Group 8 – safety group Logano G515

Index

A
Added water 35
Assembly tool 11

B
Boiler capacity 9
Boiler conditions of use 5
Boiler heat exchanger length 9
Boiler sections 9
Boiler water content 9
Burner door thickness 9

C
CO_2 content 9
Combustion chamber diameter 9
Combustion chamber length 9
Control panel assembly 5

F
Fill water 35
Fitting clearance 9
Flue gas mass flow rate 9
Flue gas resistance 9
Flue gas temperature 9
Flue pressure 9
Fuels 5

G
Gas capacity 9

H
Heat exchanger baffle plates 22
Hot gas check plates 21

I
Inspection contract 39

J
Jacket 27

M
Maintenance contract (as-required basis) 39

N
Nominal output 9

O
Operating pressure 9
Operating pressure, maximum 6
Overall boiler length 9

P
Positioning 20
Preparing 16
Product description 5

S
Safety instructions 4
Spare Parts 46
Specifications 8
Supply pipe 18
Supply temperature 6, 9

T
Temperature control 6
Thermal insulation 5, 24
Thermal output 9
Transport 10

W
Weight 9

Appendix

Data and system handover

Type _____

Manufacturer no. _____

System installer _____

User _____

Location _____

The system named above has been installed and commissioned according to standard engineering practice, as well as provisions of the buildings inspectorate and any legislative requirements.

Date, signature (system installer)

The technical documentation has been handed over to the user. He has been familiarized with the safety instructions, operation and maintenance of the system.

Date, signature (user)

please cut along dotted line

For use by system installer

Type _____

Manufacturer no. _____

User _____

Location _____

The technical documentation has been handed over to the user. He has been familiarized with the safety instructions, operation and maintenance of the system.

Date, signature (user)

United States and Canada

Bosch Thermotechnology Corp.
50 Wentworth Avenue
Londonderry, NH 03053
Tel. 603-552-1100
Fax 603-965-7581
www.buderus.us
U.S.A.

Products manufactured by
Bosch Thermotechnik GmbH
Sophienstrasse 30-32
D-35576 Wetzlar
www.bosch-thermotechnology.com

Bosch Thermotechnology Corp. reserves the right to make changes without notice due to continuing engineering and technological advances.

Buderus

RIELLO

GB Light oil burners

Low-high-low or modulating operation

c UL us LISTED

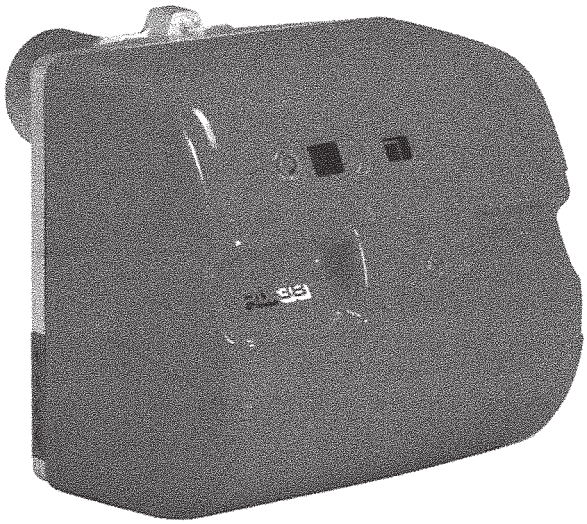

CODE	MODEL
3471070	RL 28/M
3471270 - 3471470	RL 38/M
3471670 - 3471675	RL 50/M

2915762 (7) - 11/2014

CONTENTS

INFORMATION ABOUT THE INSTRUCTION MANUAL . . . . . page 1

SAFETY AND PREVENTION 2

TECHNICAL DATA 3
Burner models 3
Accessories 3
Burner description 4
Packaging - Weight 4
Max. dimensions 4
Standard equipment 4
Firing rates 5

INSTALLATION 5
Boiler plate 5
Blast tube length 5
Securing the burner to the boiler 5
Choice of nozzle 6
Nozzle assembly 6
Combustion head setting 6
Fuel supply 7
Servomotor 8
Pump 8
Pump priming 8
Burner firing 9
Burner calibration: 9
1 - MAX power 9
2 - MIN power 10
3 - INTERMEDIATE power 10
Sequence of operation 11
Burner operation 12
Oil pressure switch 12
Burner fault indications 13

MAINTENANCE 14

APPENDIX 15
Electrical connections 15
Burner firing rates according to air density 16
Spare parts list 17
Burner start up report 21

N.B.
Figures mentioned in the text are identified as follows:
1)(A) = part 1 of figure A, same page as text;
1)(A)p.4 = part 1 of figure A, page number 4.

INFORMATION ABOUT THE INSTRUCTION MANUAL

INTRODUCTION

The instruction manual supplied with the burner:

- is an integral and essential part of the product and must not be separated from it; it must therefore be kept carefully for any necessary consultation and must accompany the burner even if it is transferred to another owner or user, or to another system. If the manual is lost or damaged, another copy must be requested from the Technical Assistance Service of the area;
- is designed for use by qualified personnel;
- offers important indications and instructions relating to the installation safety, start-up, use and maintenance of the burner.

DELIVERY OF THE SYSTEM AND THE INSTRUCTION MANUAL

When the system is delivered, it is important that:

- the instruction manual is delivered to the user by the system manufacturer, with the recommendation to keep it in the room where the heat generator is to be installed.
- The instruction manual shows:
  - the serial number of the burner;

    .....
  - the address and telephone number of the nearest Assistance Centre.

    .....
    .....
    .....
- The system supplier must carefully inform the user about:
  - the use of the system;
  - any further tests that may be required before activating the system;
  - maintenance, and the need to have the system checked at least once a year by a representative of the manufacturer or another specialised technician.
    To ensure a periodic check, the manufacturer recommends the drawing up of a Maintenance Contract.

GUARANTEE AND RESPONSIBILITY

The manufacturer guarantees its new products from the installation date, in accordance with the regulations in force and/or the sales contract. At the moment of the first start-up, check that the burner is integral and complete.



Failure to observe the information given in this manual, operating negligence, incorrect installation and carrying out of non authorised modifications will result in the annulment by the manufacturer of the guarantee that it supplies with the burner.

In particular, the rights to the guarantee and the responsibility will no longer be valid, in the event of damage to things or injury to people, if such damage/injury was due to any of the following causes:

- incorrect installation, start-up, use and maintenance of the burner;
- improper, incorrect or unreasonable use of the burner;
- intervention of unqualified personnel;
- carrying out of unauthorised modifications on the equipment;
- use of the burner with safety devices that are faulty, incorrectly applied and/or not working;
- installation of untested supplementary components on the burner;
- powering of the burner with unsuitable fuels;
- faults in the fuel supply system;
- use of the burner even following an error and/or an irregularity;
- repairs and/or overhauls incorrectly carried out;
- modification of the combustion chamber with inserts that prevent the regular development of the structurally established flame;
- insufficient and inappropriate surveillance and care of those burner components most likely to be subject to wear and tear;
- the use of non-original components, including spare parts, kits, accessories and optional;
- force majeure.

The manufacturer furthermore declines any and every responsibility for the failure to observe the contents of this manual.

SAFETY AND PREVENTION

INTRODUCTION

The burners have been designed and built in compliance with current regulations and directives, applying the known technical rules of safety and envisaging all the potential danger situations.

It is necessary, however, to bear in mind that the imprudent and clumsy use of the equipment may lead to situations of death risk for the user or third parties, as well as the damaging of the burner or other items. Inattention, thoughtlessness and excessive confidence often cause accidents; the same applies to tiredness and sleepiness.

It is a good idea to remember the following:

- The burner must only be used as expressly described. Any other use should be considered improper and therefore dangerous.

In particular:

it can be applied to boilers operating with water, steam, diathermic oil, and to other uses expressly named by the manufacturer;

the type and pressure of the fuel, the voltage and frequency of the electrical power supply, the minimum and maximum deliveries for which the burner has been regulated, the pressurisation of the combustion chamber, the dimensions of the combustion chamber and the room temperature must all be within the values indicated in the instruction manual.

- Modification of the burner to alter its performance and destinations is not allowed.
- The burner must be used in exemplary technical safety conditions. Any disturbances that could compromise safety must be quickly eliminated.
- Opening or tampering with the burner components is not allowed, apart from the parts requiring maintenance.
- Only those parts envisaged by the manufacturer can be replaced.



The manufacturer guarantees safety and proper functioning only if all burner components are intact and positioned correctly.

PERSONNEL TRAINING

The user is the person, body or company that has acquired the machine and intends to use it for the specific purpose. He is responsible for the machine and for the training of the people working around it.

The user:

- undertakes to entrust the machine exclusively to suitably trained and qualified personnel;
- undertakes to inform his personnel in a suitable way about the application and observance of the safety instructions. With that aim, he undertakes to ensure that everyone knows the use and safety instructions for his own duties;
- Personnel must observe all the danger and caution indications shown on the machine.
- Personnel must not carry out, on their own initiative, operations or interventions that are not within their province.
- Personnel must inform their superiors of every problem or dangerous situation that may arise.
- The assembly of parts of other makes, or any modifications, can alter the characteristics of the machine and hence compromise operating safety. The manufacturer therefore declines any and every responsibility for any damage that may be caused by the use of non-original parts.

TECHNICAL DATA

MODEL			RL 28/M	RL 38/M	RL 38/M	RL 50/M	RL 50/M
Output (1)	High	MBtu/hr (3)	630 - 1260	896 - 1708	896 - 1708	1120 - 2240	1120 - 2240
		GPH	4.5 - 9	6.4 - 12.2	6.4 - 12.2	8 - 16	8 - 16
	Low	MBtu/hr (3)	336 - 630	378 - 896	378 - 896	490 - 1120	490 - 1120
		GPH	2.4 - 4.5	2.7 - 6.4	2.7 - 6.4	3.5 - 8	3.5 - 8
Fuel			# 2 fuel oil				
Operation			Low - high or modulating				
Nozzle		number	1 (nozzle with return)				
Standard applications			Boilers: water, steam, thermal oil				
Ambient temperature		°F	32 - 104 (0 - 40 °C)				
Combustion air temperature		°F max	140 (60 °C)				
Main power supply (+/- 10%)		V/Ph/Hz	120/1/60		208-230 / 460 / 575 / 3/ 60		120-230/1/60
Fan motor		rpm	3400	3400	3400	3400	3400
		W - HP	370 - 0.5	370 - 0.5	550 - 0.75	550 - 0.75	550 - 0.75
		V	120	120	208 - 230 / 460 / 575	208 - 230 / 460 / 575	120 - 230
		A	5.2	5.2	3.2 - 1.6 - 1.3	3.2 - 1.6 - 1.3	9.8 - 4.9
Motor capacitor		µF	45				20
Ignition transformer		V1 - V2	120 V - 2 x 5 kV				
		I1 - I2	3.7 A - 35 mA				
Pump	delivery (at 290 PSI)	GPH	32				
	pressure range	PSI	145 - 290				
	fuel temperature	°F max	140 (60 °C)				
Electrical power consumption		W max	550	600	700	800	750
Electrical protection			NEMA 1				
Noise levels (2)		dBA	68	70	70	75	75

(1) Reference conditions: Ambient temperature 68 °F (20 °C) - Barometric pressure 394" W.C. - Altitude 329 ft.
(2) Sound pressure measured in manufacturer's combustion laboratory, with burner operating on test boiler and at maximum rated output.
(3) Equivalent Btu values based on 1 USGPH = 140,000 Btu/hr.

Burner models designations

Model	Code	RBNA Code	Voltage	Flame safeguard
RL 28/M	3471070	C9511300	120/1/60	Burner mounted
RL 38/M	3471270	-	120/1/60	Burner mounted
	3471470	C9512300	208-230/460/3/60	Burner mounted
	3471470	C9512301	575/3/60	Burner mounted
RL 50/M	3471675	-	120/1/60	Burner mounted
	3471670	C9513300	208-230/460/3/60	Burner mounted
	3471670	C9513301	575/3/60	Burner mounted

ACCESSORIES (optional):

Modulating control kit

Two components should be ordered:

- modulating control to install on the burner;
- probe to install on the boiler.

PARAMETER TO BE CHECKED		PROBE		MODULATING CONTROL	
	Range	Type	Code	Type	Code
Temperature	- 212...+ 932 °F (- 100...+ 500 °C)	PT 100	3010110	RWF40	3010212
Pressure	0...36.3 PSI (0...2.5 bar)	Probe with output	3010213		
	0...232 PSI (0...16 bar)	4...20 mA	3010214		

Kit for lengthening the combustion head

L = Standard length
L1 = Length obtainable with the kit

COD. 3010277	L = 9 15/32"	L1 = 13 13/16"	• RL 28/M
COD. 3010278	L = 9 15/32"	L1 = 13 13/16"	• RL 38/M
COD. 3010279	L = 9 15/32"	L1 = 13 13/16"	• RL 50/M

Flame inversion boiler kit

COD. 3010178 • RL 28/M - RL 38/M
COD. 3010179 • RL 50/M

Important:
The installer is responsible for the supply and installation of any safety device(s) not indicated in this manual.

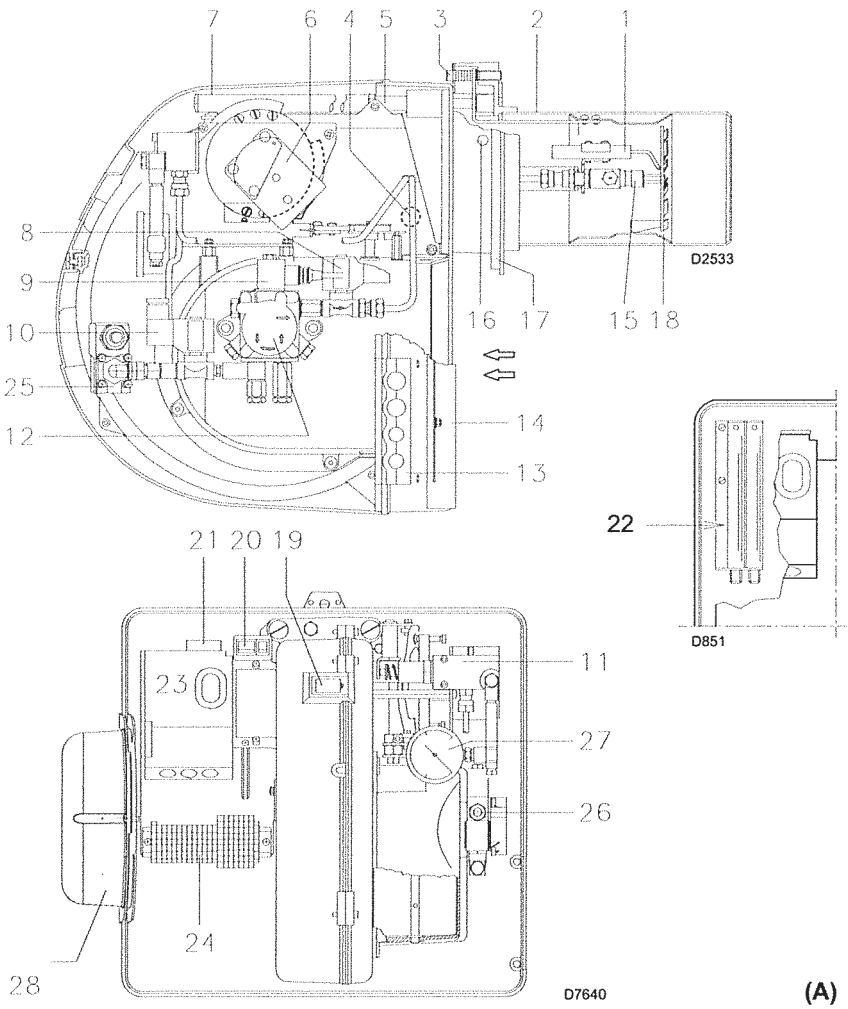

(A)

inch	A	B	C	lbs
RL 28/M	39 31/32"	24 13/16"	19 11/16"	86
RL 38/M	39 31/32"	24 13/16"	19 11/16"	90
RL 50/M	39 31/32"	24 13/16"	19 11/16"	92
RL 50/M	39 31/32"	24 13/16"	21 11/16"	94

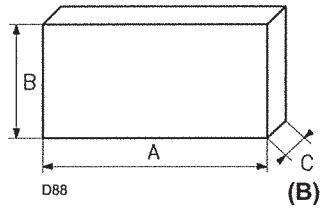

(B)

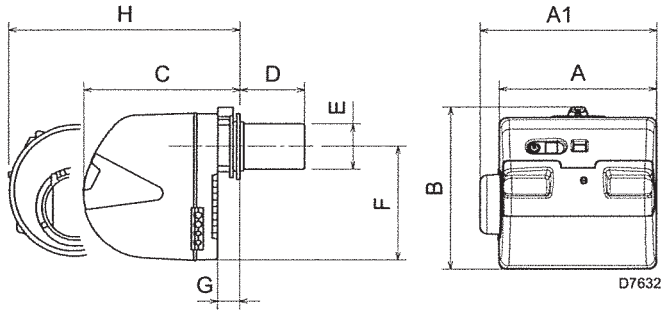

inch	A	A1	B	C	D (1)
RL 28/M	18 23/32"	-	18 21/32"	18 13/32"	9 15/32" - 13 13/16"
RL 38/M	18 23/32"	-	18 21/32"	18 13/32"	9 15/32" - 13 13/16"
RL 50/M three-phase	18 23/32"	-	18 21/32"	18 13/32"	9 15/32" - 13 13/16"
RL 50/M single-phase	-	21 3/16"	18 21/32"	18 13/32"	9 15/32" - 13 13/16"

inch	E	F	G	H (1)
RL 28/M	5 1/2"	13 27/32"	2 1/16"	26 15/32" - 31 3/4"
RL 38/M	5 1/2"	13 27/32"	2 1/16"	26 15/32" - 31 3/4"
RL 50/M three-phase	5 31/32"	13 27/32"	2 1/16"	26 15/32" - 31 3/4"
RL 50/M single-phase	5 31/32"	13 27/32"	2 1/16"	26 15/32" - 31 3/4"

(1) Blast tube: short - long (obtainable with the kit)

(C)

BURNER DESCRIPTION (A)

1 Ignition electrodes
2 Combustion head
3 Screw for combustion head adjustment
4 Photocell (cad cell)
5 Screw for fixing fan to flange
6 Servomotor provides adjustment of fuel delivery ulator and of air damper. When the burner is no. erating the air damper is fully closed in order to reduce heat dispersion from the boiler due to the flue draft which draws air from the fan suction inlet.
7 Slide bars for opening the burner and inspecting the combustion head
8 Safety solenoid valve
9 Pump delivery valve
10 Valve on nozzle return
11 Pressure regulator on nozzle return
12 Pump
13 Plate prearranged to drill 4 holes for the passage of hoses and electrical cables.
14 Air damper
15 Non-drip nozzle holder
16 Fan pressure test point
17 Boiler mounting flange
18 Flame stability disk
19 Flame inspection window
20 Power switch for different operation:
automatic - manual - off
Button for:
power increase - power reduction
21 Motor contactor and thermal overload with reset button (RL 38 - 50/M)
22 Extensions for slide bars 7)
23 Flame safeguard with lock-out pilot light and lock-out reset button
24 Terminal strip
25 High oil pressure switch
26 Pump pressure adjustment
27 Pressure gauge for pressure on nozzle return
28 Protection (for RL 50/M single-phase burner)

Two types of burner failure may occur:
Flame safeguard lock-out:
If the flame relay 23)(A) pushbutton lights up, it indicates that the burner is in lock-out.
To reset, press the pushbutton.
Motor trip (RL 38 - 50/M):
release by pressing the pushbutton on thermal overload 21)(A).

PACKAGING - WEIGHT (B) - Approximate measurements

- The burners are shipped in cardboard boxes with the maximum dimensions shown in Table (B).
- The weight of the burner complete with packaging is indicated in Table (B).

MAX. DIMENSIONS (C) - Approximate measurements
The maximum dimensions of the burner are given in (C). Inspection of the combustion head requires the burner to be opened and the rear part withdrawn on the slide bars. The maximum dimension of the burner, without casing, when open is give by measurement H.

STANDARD EQUIPMENT

2 - Flexible hoses
2 - Gaskets for flexible hoses
1 - Burner head gasket
4 - Screws to secure the burner flange to the boiler 3/8 W x 1"
1 - Adaptor G 1/8" / 1/8" NPT
1 - Instruction booklet
1 - Spare parts list

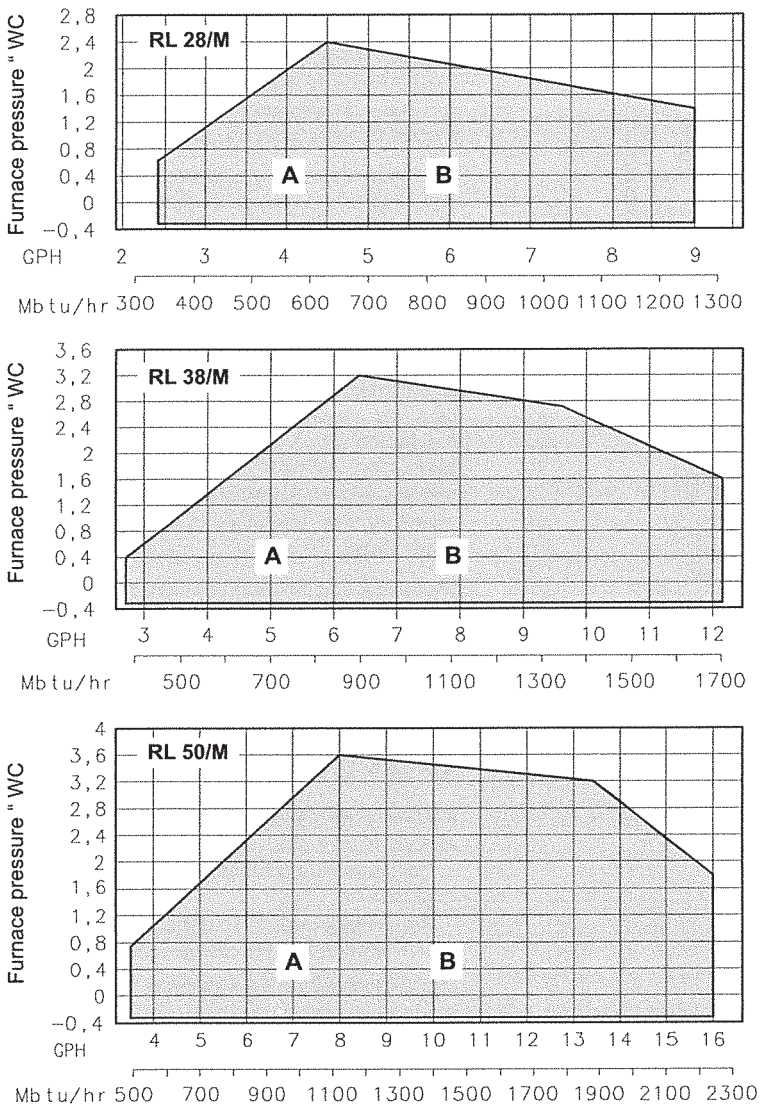

(A) D2526

inch	A	B	C
RL 28/M	$6^{5}/_{16}$"	$8^{13}/_{16}$"	$^{3}/_{8}$ W
RL 38/M	$6^{5}/_{16}$"	$8^{13}/_{16}$"	$^{3}/_{8}$ W
RL 50/M	$6^{5}/_{16}$"	$8^{13}/_{16}$"	$^{3}/_{8}$ W

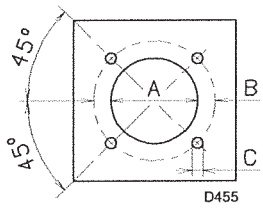

D455

(B)

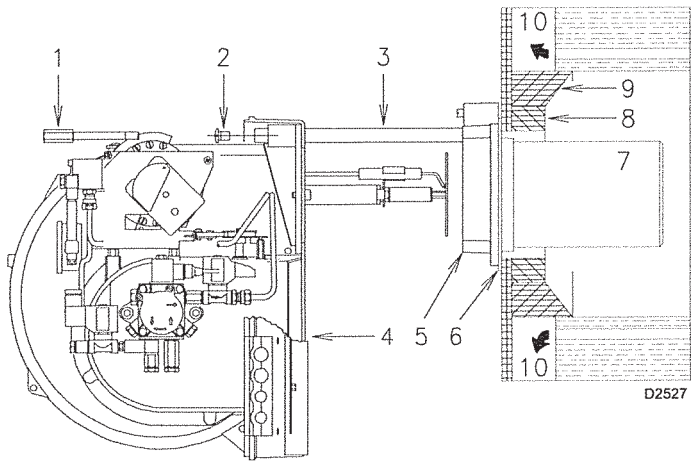

D2527

(C)

FIRING RATES (A)

During operation, burner output varies between:
- **MINIMUM OUTPUT** : area A
- **MAXIMUM OUTPUT** : area B

Graphs (A):
Horizontal axis : Burner output
Vertical axis : Heater furnace pressure
The firing rate may be found by plotting a vertical line from the desired delivery and a horizontal line from the pressure in the combustion chamber. The intersection of these two lines is the firing rate which must lie within area A, for MIN output, and within area B, for MAX output.
Important:
The FIRING RATE area values have been obtained considering a surrounding temperature of 68 °F (20 °C), and an atmospheric pressure of 394" W.C. and with the combustion head adjusted as shown on page 6.

Note:
The FIRING RATE areas given in figure (A) have been reduced by 10% with respect to the maximum range that can be reached.

Consult Appendix on page 22 for operation at different ambient temperatures and / or altitudes.

MINIMUM FURNACE DIMENSIONS

The firing rates were set in relation to certified test boilers.
Figure below indicates the diameter and length of the test combustion chamber.

Example:
output 1388 MBTU/h:
diameter 20 inch - length 4.9 ft.

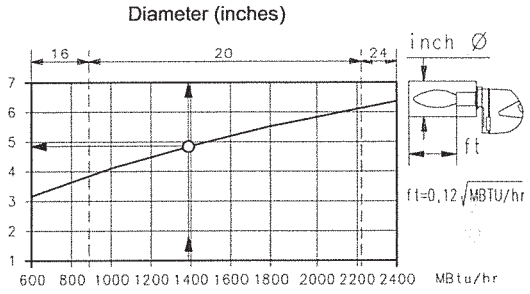

D2918

INSTALLATION

BOILER PLATE (B)

Drill the combustion chamber mounting plate as shown in (B). The position of the threaded holes can be marked using the burner head gasket supplied with the burner.

BLAST TUBE LENGTH (C)

The length of the blast tube 7) must be selected according to the indications provided by the manufacturer of the boiler, and in any case it must be greater than the thickness of the boiler door complete with its insulation.
The range of lengths available, (inch), is as follows:

Blast tube 7):	RL 28/M	RL 38/M	RL 50/M
• short	$9^{15}/_{32}$"	$9^{15}/_{32}$"	$9^{15}/_{32}$"
• long	$13^{13}/_{16}$"	$13^{13}/_{16}$"	$13^{13}/_{16}$"

For boilers with front flue passes 10) or flame inversion chambers, protective insulation 8) must be inserted between the boiler refractory 9) and the blast tube 7).
This protective insulation must not compromise the extraction of the blast tube.
For boilers having a water-cooled front the insulation 8)-9)(C) is not required unless it is required by the boiler manufacturer.

SECURING THE BURNER TO THE BOILER (C)

Disassemble the blast tube 7) from the burner 4) by proceeding as follows:
- remove the screws 2) from the two slide bars 3).
- Remove the screw 1) fixing the burner 4) to the flange 5).
- Withdraw the blast tube 7) complete with flange 5) and slide bars 3).

Secure flange 5)(C) to the boiler plate inserting the supplied gasket 6). Use the 4 screws provided after having protected the thread with an antilocking product.
The burner-boiler seal must be airtight.

1 A3 - A4	2 GPH	3 PSI	4 PSI
15	4.2	290	246.5
20	6.4	290	246.5
30	7.7	290	217.5
40	9.6	290	232
50	10.6	290	232
60	13.4	290	232
70	16	290	217.5

(A)

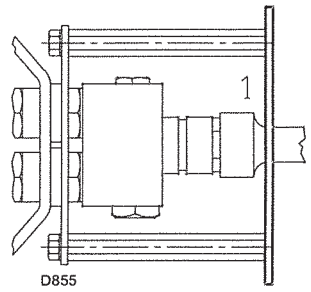

(B)

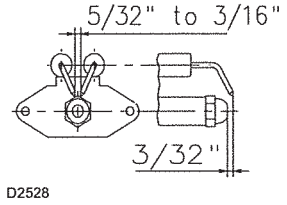

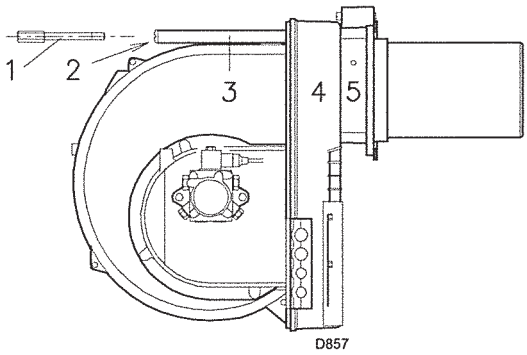

(C) (D)

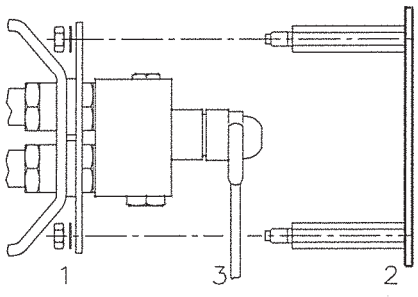

(E)

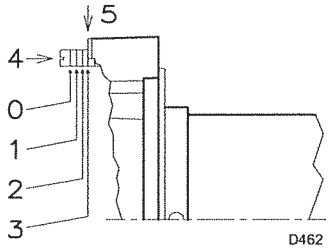

(F)

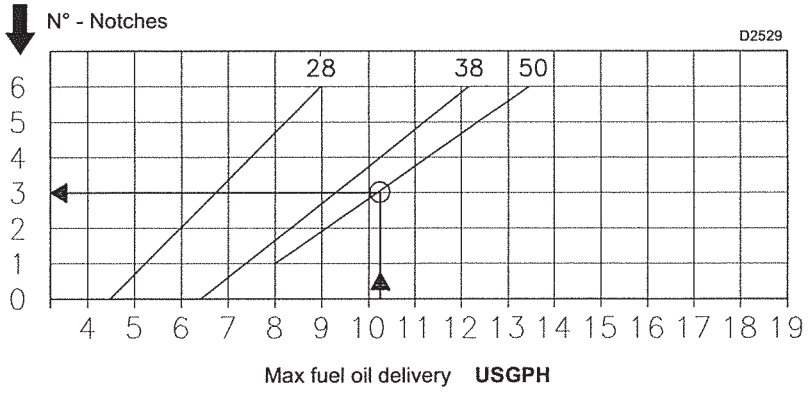

(G)

CHOICE OF NOZZLE (A)

Nozzle must be chosen among those in table (A):

1 = Type A3 or A4 return flow nozzle
2 = MAX nozzle delivery
3 = Pump delivery pressure
4 = MAX pressure on nozzle return

In case an intermediate delivery between the two values indicated in the table is required, a nozzle with higher delivery must be chosen. Delivery reduction will be obtained by means of the pressure regulator.

RECOMMENDED NOZZLES:
Type A4 return flow nozzles - 45° angle.

NOZZLE ASSEMBLY

At this stage of installation the burner is still disassembled from the blast tube; it is therefore possible to install the nozzle with a box wrench 1)(B), fitting the wrench through the central hole in the flame stability disk. Do not use any sealing products such as gaskets, sealing compound, or tape. Be careful to avoid damaging the nozzle sealing seat.

Make sure that the electrodes are positioned as shown in Figure (C).
Finally remount the burner 4)(D) on the slide bars 3) and slide it up to the flange 5), keeping it slightly raised to prevent the flame stability disk from pressing against the blast tube.
Tighten the screws 2) on the slide bars 3) and screw 1) that attaches the burner to the flange.

If it proves necessary to change a nozzle with the burner already fitted to the boiler, proceed as outlined below:
- Pull back the burner on its slide bars as shown in fig. (C)p.5.
- Remove the nuts 1)(E) and the disk 2).
- Use wrench 3)(E) to change the nozzles.

COMBUSTION HEAD SETTING

The setting of the combustion head depends exclusively on the maximum burner delivery at which it will be operating. Turn screw 4)(F) until the notch shown in diagram (G) is level with the front surface of flange 5)(F).

Example:
RL 50/M, maximum fuel oil delivery = 10.2 GPH.
Diagram (G) indicates that for a delivery of 10.2 GPH the RL 50/M Model requires the combustion head to be set to approx. three notches, as shown in Figure (F).

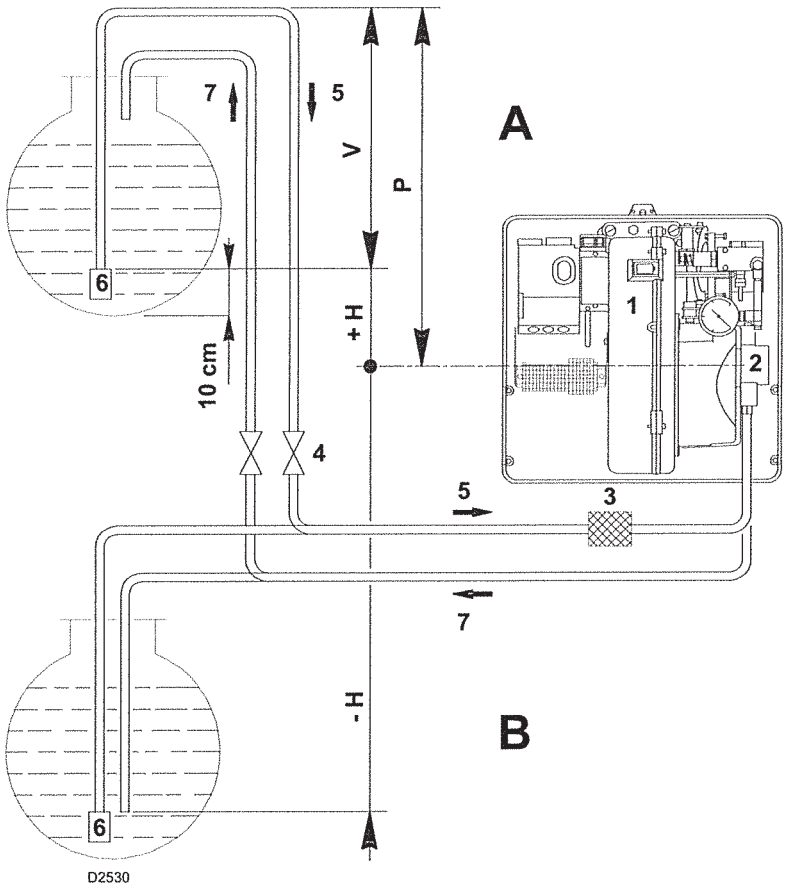

D2530

+/- H ft	L ft Ø inch		
	3/8"	1/2"	5/8"
+ 13	168	368	493
+ 10	148	326	493
+ 6.6	128	283	493
+ 3.3	105	240	474
+ 1.6	95	217	434
0	85	197	395
- 1.6	76	178	355
- 3.3	66	155	316
- 6.6	43	112	234
- 10	23	69	151
- 13	-	26	69

(A)

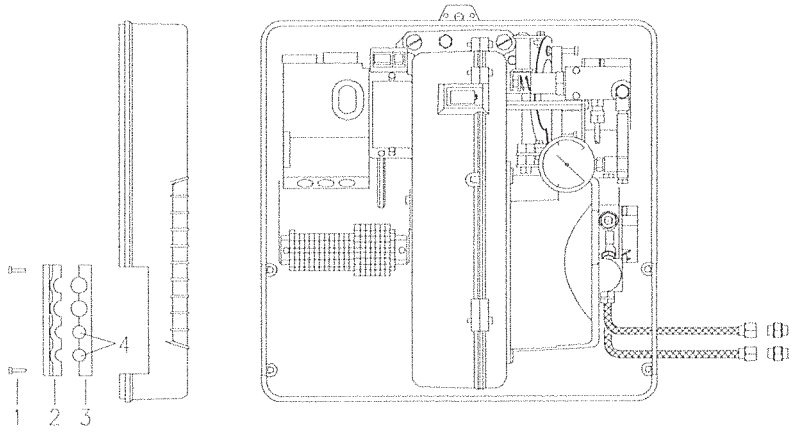

(B)

D2531

FUEL SUPPLY

Double-pipe circuit (A)

The burner is equipped with a self-priming pump which is capable of supplying itself within the limits listed in the table at the side.

The tank higher than the burner **A**

Distance "P" must not exceed 33 ft in order to avoid subjecting the pump's seal to excessive strain; distance "V" must not exceed 13 ft in order to permit pump self-priming even when the tank is almost completely empty.

The tank lower than the burner **B**

Pump suction values higher than 13 "Hg must not be exceeded because at higher levels gas is released from the fuel, the pump starts making noise and its working life-span decreases.

It is good practice to ensure that the return and suction lines enter the burner from the same height; in this way it will be less probable that the suction line fails to prime or stops priming.

The loop circuit

A loop circuit consists of a loop of piping leaving and returning to the tank with an auxiliary pump that circulates the fuel under pressure. A branch connection from the loop goes to feed the burner. This circuit is extremely useful whenever the burner pump does not succeed in self-priming because the tank distance and/or height difference are higher than the values listed in the Table.

Key

H = Pump/foot valve height difference
L = Piping length
Ø = Inside pipe diameter
1 = Burner
2 = Pump
3 = Filter
4 = Manual on/off valve
5 = Suction line
6 = Foot valve
7 = Return line

HYDRAULIC CONNECTIONS (B)

The pumps are equipped with a by-pass that connects return line to the suction line. The pumps are installed on the burner with the by-pass closed by screw 6)(A)p.12.

It is therefore necessary to connect both hoses to the pump.

The pump seal will be damaged immediately if it is run with the return line closed and the by-pass screw inserted.

Remove the plugs from the suction and return connections of the pump.

Insert the hose connections with the supplied seals into the connections and tighten.

Take care that the hoses are not stretched or twisted during installation.

Route the hoses through the holes in the plate, preferably using those on the rh side, fig. (B): unscrew the screws 1), now divide the insert piece into its two parts 2) and 3) and remove the thin section blocking the two passages 4). Install the hoses where they cannot be stepped on or come into contact with hot surfaces of the boiler.

Now connect the other end of the hoses to the suction and return lines.

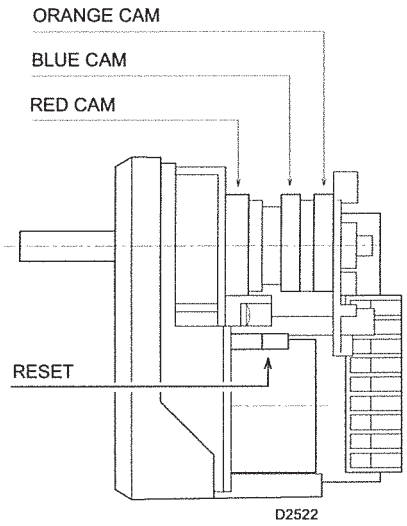

(A)

SUNTEC AL 95 C

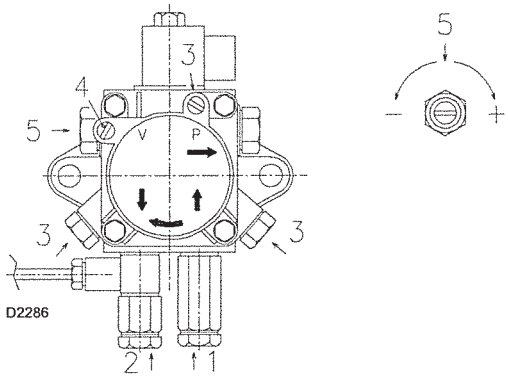

		AL 95 C
A	GPH	32
B	PSI	145 - 290
C	"Hg	13
D	cSt	2 - 12
E	°F - °C	140 - 60
F	PSI	29
G	PSI	290
H	inch	0,006

(B)

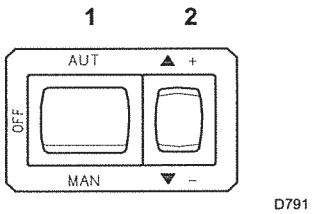

(C)

SERVOMOTOR (A)

The servomotor provides simultaneous adjustment of the air damper 11)(B) page 9 and the pressure regulator 9) by means of a double variable profile cam, 4) and 7). The servomotor rotates through 90° in 25 seconds.
Do not alter the factory setting for the cams; simply check that they are set as indicated below:

Red cam : 90°
Limits rotation toward maximum position.
Blue cam : 0°
Limits rotation toward the minimum position. When the burner is shut down the air damper must be closed: 0°.
Orange cam : 15°
Adjusts the ignition position and the MIN output.

PUMP (B)

1 - Suction	1/4" NPT
2 - Return	1/4" NPT
3 - Pressure gauge attachment	G 1/8"
4 - Vacuum gauge attachment	G 1/8"
5 - Pressure adjustment screw	

A - Min. delivery rate at 290 PSI pressure
B - Delivery pressure range
C - Max. suction pressure
D - Viscosity range
E - Max fuel oil temperature
F - Max. suction and return pressure
G - Pressure calibration in the factory
H - Filter mesh width

PUMP PRIMING

- **Before starting the burner, make sure that the tank return line is not clogged. Obstructions in the line could cause the seal located on the pump shaft to break.**
- In order for self-priming to take place, one of the screws 3)(B) of the pump must be loosened to bleed off the air contained in the suction line.
- Start the burner by closing the control circuit switch 1)(C) in the "MAN" position. As soon as the burner starts, check the direction of rotation of the fan blade, by looking through the flame inspection window 19)(A)p.4.
- The pump can be considered primed when the fuel oil starts coming out of the screw 3). Stop the burner: switch 1)(C) set to "OFF" and tighten the screw 3).

The time required for this operation depends upon the diameter and length of the suction tubing. If the pump fails to prime at the first cycle of the burner and the burner locks out, wait approx. 15 seconds, reset the burner, and then repeat the starting operation as often as required. After 5 or 6 starting operations allow 2 or 3 minutes for the transformer to cool.

Important
The priming operation is possible because the pump is already full of fuel when it leaves the factory. If the pump has been drained, fill it with fuel through the opening for the vacuum gauge prior to starting; otherwise, the pump will seize. Whenever the length of the suction piping exceeds 66 - 99 ft, the supply line must be filled using a separate pump.

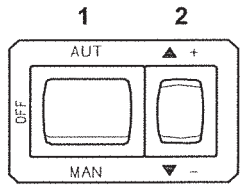

(A) D791

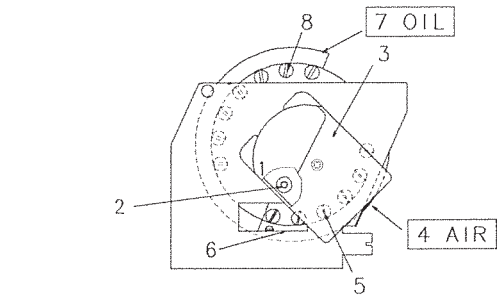

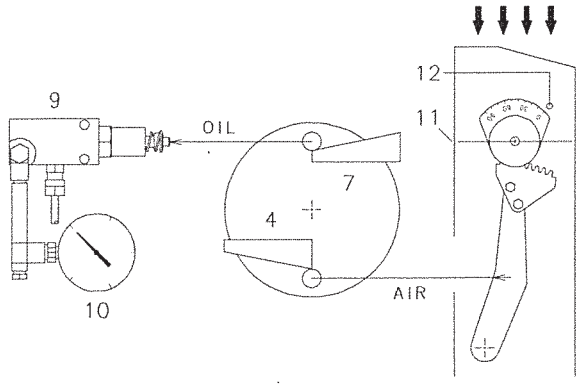

(B) D2523

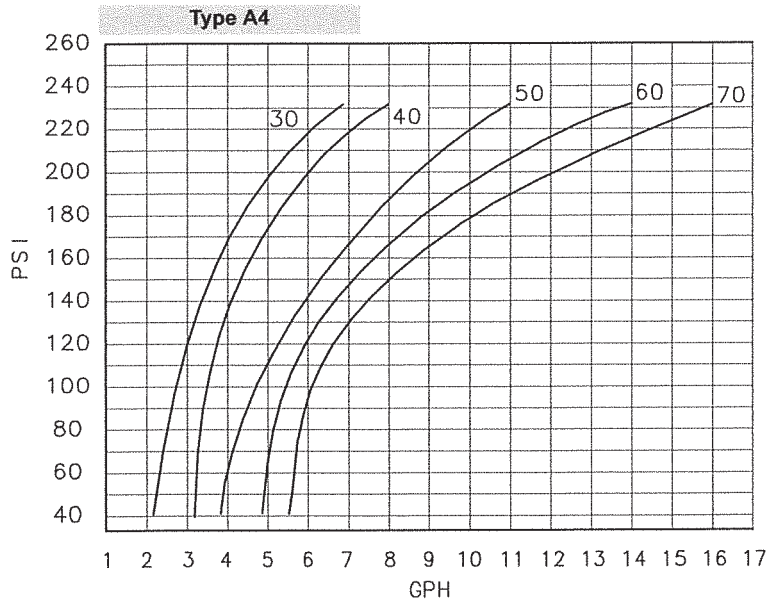

The values indicated in the curves, refer to the data printed on the nozzle.

(C) D2321

BURNER FIRING

Close load controls and set switch 1)(A) to "MAN".
After burner firing a complete burner adjustment should be performed.

BURNER CALIBRATION

The optimum calibration of the burner requires an analysis of the flue gases at the boiler outlet.
The following settings that have already been made do not require modification under normal circumstances:

- Combustion head;
- Servomotor, red and blue cams

The settings listed below must be adjusted in sequence:
1 - MAX burner output
2 - MIN burner output
3 - Intermediate outputs between MAX and MIN output

1 - MAX power

Max output of the burner must be set within the firing rate range shown on page 5.
In the above instructions we left the burner running in MIN output operation. Now press button 2)(A) "+" until servomotor arrives at 90°.

Adjusting the nozzle flow rate

The nozzle flow rate varies according to the fuel pressure on the nozzle return. Diagram (C) indicates this relationship for type A4 return flow nozzles with pump delivery pressure of 290 PSI.

Diagrams (C):
Horizontal axis : GPH, nozzle flow rate
Vertical axis : PSI, nozzle return pressure

NOTE

With a pump delivery pressure of 290 PSI, the pressure on the nozzle return must not exceed 246.5 PSI.
The pressure difference between pump delivery and nozzle return must be at least 43.5 PSI. With smaller pressure differences, the pressure on the nozzle return can be unstable.

To fix the maximum nozzle flow rate, vary the final profile on the upper cam 7)(B) via the screws 8).
The nozzle return pressure value is indicated by the pressure gauge 10).

Key (B)

1 Servomotor
2 Reset
3 Servomotor cover
4 Cam for controlling air damper
5 Cam 4) adjustable screws
6 Opening for access to screws 5)
7 Cam for controlling pressure regulator
8 Cam 7) adjustable screws
9 Pressure regulator
10 Gauge for pressure on nozzle return
11 Air damper
12 Index

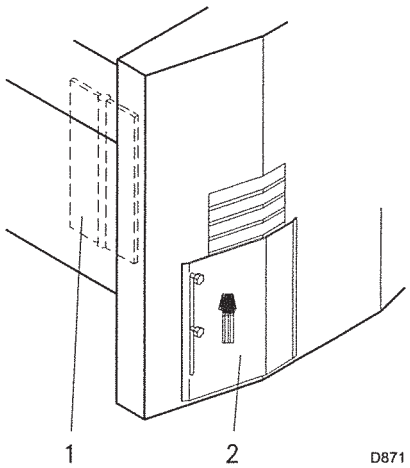

(A) D871

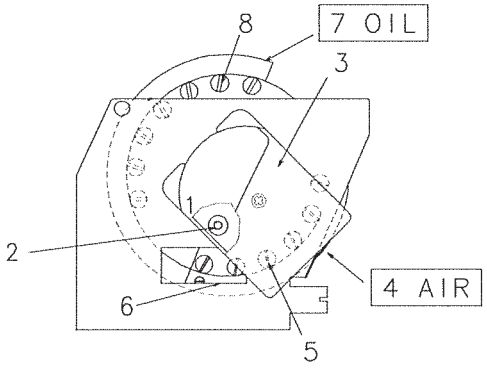

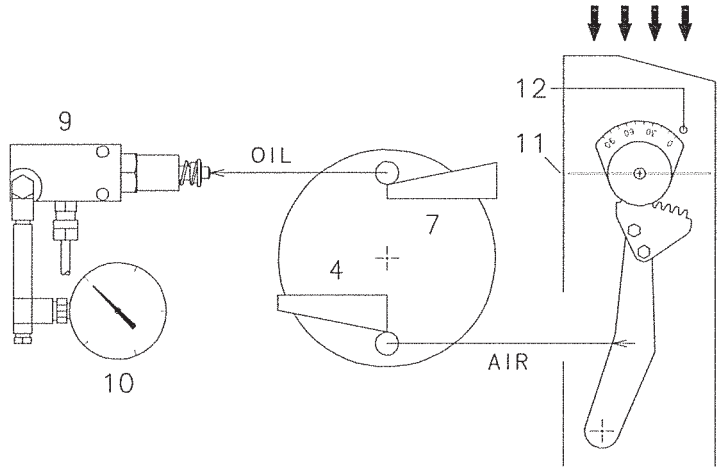

(B) D2523

Adjusting air delivery

Two shutters 1) and 2) are provided to adjust the air. These shutters are factory set to maximum opening.

Firstly,with burner at maximum operation, adjust shutter 2) which must be closed gradually until optimum combustion is obtained. If total closure of shutter 2) is not sufficient, also close shutter 1) (secondly) as follows:

vary the final profile of the lower cam 4)(B) via the screws 5) inside the opening 6).

If the burner is operated at maximum power, the fan air may not be sufficient even with both shutters 1) and 2) fully open. In this case, remove shutter 2) and adjust the air using shutter 1) only as described above.

Cams 7) - 4)(B):

- tighten screws 8)-5) to increase air delivery;
- unscrew screws 8)-5) to reduce air delivery.

2 - MIN power

The MIN power must be chosen from within the working range given on page 5. Press the "-" button 2)(A) page 9 and keep it pressed until the servomotor has reached 15° (factory setting).

Nozzle flow rate adjustment

The nozzle flow rate is given in diagram (C)p.9 corresponding to the pressure on the nozzle return read on the pressure gauge 10)(B). To vary the nozzle minimum flow rate, modify the initial profile of the upper cam 7)(B) via the screws 8).

Adjusting air delivery

Modify the initial profile of the lower cam 4)(B) via the screws 5) inside the opening 6).

If possible, do not rotate the first screw as this is the one that provides for total closure of the air damper.

3 - INTERMEDIATE power

Air/oil flow rate adjustment

Slightly press the "+" button 2)(A) page 9 so that a new screw 5)(B) appears inside the opening 6)(B).

Adjust screw 8)(B) which varies the profile of the upper cam 7) and the corresponding screw 5) which controls the lower cam 4) until you obtain optimum combustion.

Proceed in the same way with the next screws except for the last one, previously adjusted to obtain maximum power.

Ensure that variation of the cams profile is gradual.

Turn the burner off via switch 1)(A) page 9, OFF position, release the cam with variable profile by pressing the reset button 2)(B) and check that the movement is smooth by manually rotating the cam backwards and forwards several times.

NOTE

Red and blue cams of the servomotor do not require adjustment. Only orange cam may need adjusting.

The servomotor follows the adjustment of cam III only when the cam angle is reduced. If you need to increase the cam angle (15..16..17°..), first increase the servomotor angle via the "+" button, then increase the angle of orange cam and finally reset the servomotor to the MIN power position via the "-" button.

Full Modulation

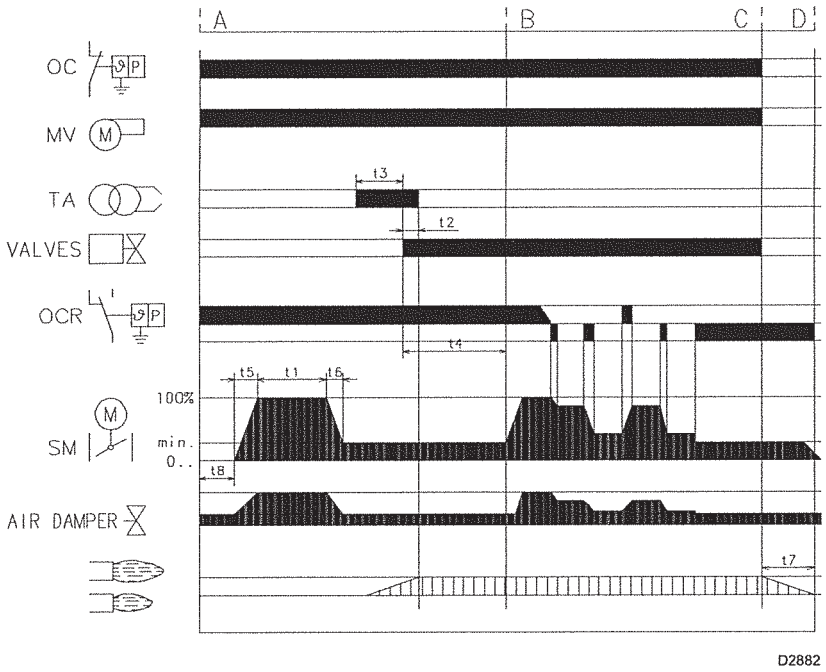

(A)

Low-High

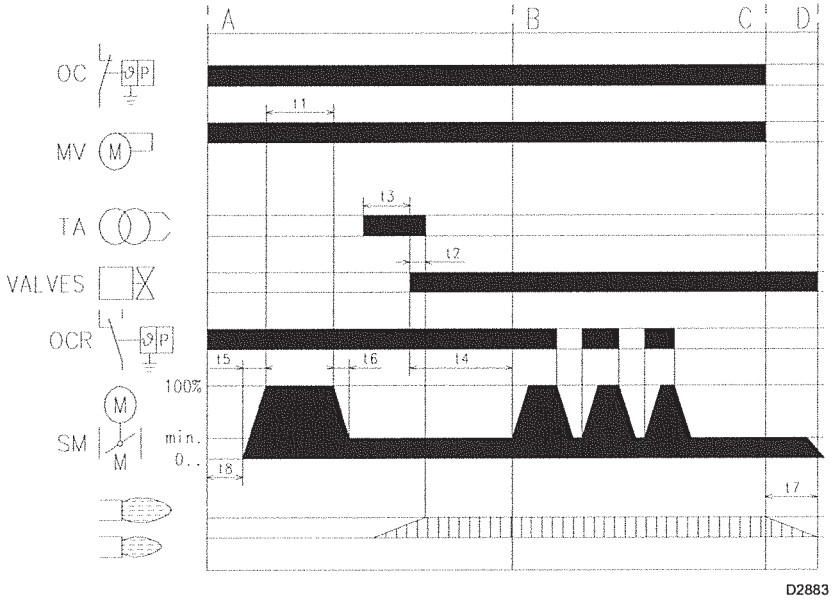

(B)

SEQUENCE OF OPERATION

Switching times are given in seconds, in the burner start-up sequence.

LAL 2.25

t1	18	**t5**	optional
t2	4	**t6**	optional
t3	2	**t7**	12
t4	12	**t8**	4

Legend for the times

- **t1** Pre-purge time with air damper open
- **t2** Safety time
- **t3** Pre-ignition time, short ("Z" connected to terminal "16")
- **t4** Interval between voltage at terminals "18" and "20"
- **t5** Air damper running time to OPEN position
- **t6** Air damper running time to low-flame position (MIN)
- **t7** Permissible after-burn time
- **t8** Interval to the OPEN command for the air damper

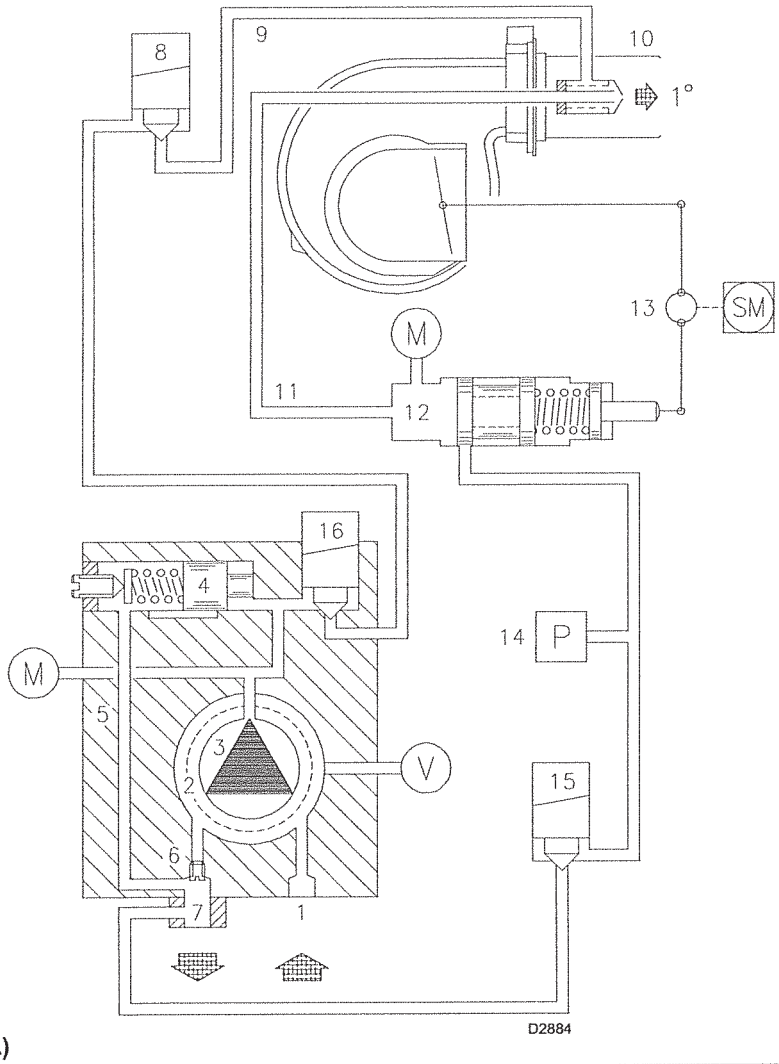

(A)

BURNER OPERATION

BURNER STARTING - See figure (A)

Control circuit closes, the motor starts.

The pump 3) sucks the fuel from the tank through the piping 1) and the filter 2) and pumps it under pressure to delivery. The piston 4) rises and the fuel returns to the tank through the piping 5) - 7). The screw 6) closes the bypass heading towards suction and the de-energized solenoid valves 8) - 15) - 16) close the passage to the nozzle.

Servomotor starts: 90° rotation to right, until contact is made on red cam.

The air damper is positioned on MAX. output.

Pre-purge stage with air delivery at MAX. output.

Servomotor rotates to left until contact is made on orange cam.

Air damper and pressure regulator are positioned on MIN output.

Ignition electrode spark.

Solenoid valves 8) - 15) - 16) open; the fuel passes through the piping 9) and filter 10), finally it enters the nozzle.

A part of the fuel is then sprayed out through the nozzle, igniting when it comes into contact with the spark: flame at a low output level, point A; the rest of the fuel passes through piping 11) at the pressure adjusted by the regulator 12), then, through piping 7), it goes back into the tank.

The spark goes out.

The starting cycle ends.

STEADY STATE OPERATION

At the end of the starting cycle, the servo-motor control then passes to load control for boiler pressure or temperature.

- If the temperature or pressure is low, the burner progressively increases output up to MAX.
- If subsequently the temperature or pressure is high, the burner progressively decreases output down to MIN.
- The burner shuts down when demand for heat is less than the heat supplied by the burner in the MIN output. Load control opens. The servomotor returns to the 0° angle limited by contact with blue cam. The air damper closes completely to reduce thermal dispersion to a minimum.

Every time output is changed, the servomotor automatically modifies oil delivery (pressure regulator) and air delivery (fan air damper).

FIRING FAILURE

If the burner does not fire, it goes into lock-out within 5 s of the opening of the fuel oil valve.

FIRING FAILURE

If the flame should go out for accidental reasons during operation, the burner will lock out in 1 s.

OIL PRESSURE SWITCH

The oil pressure switch 25)(A) page 4 and 14)(A) page 12 is factory set to 43.5 PSI (3 bar). If the gas oil pressure reaches this value in the return piping, the pressure switch stops the burner. Burner starts again automatically if the pressure goes down under 43.5 PSI (3 bar) after burner shut down. If a loop circuit with Px pressure feeds the burner, the pressure switch should be adjusted to Px + 43.5 PSI.

BURNER FAULT INDICATIONS

Control program fault conditions and lock-out indication

Whenever a fault occurs, the sequence switch stops and with it the lock-out indicator.
The symbol above the reading mark of the indicator gives the type of fault:

◀	**No start**	One of the contacts has not closed	- Air damper opened. The limit switch (blue cam) for the closed position do not supply voltage from terminal 11 to terminal 8. - The contact of the limit thermostat or any other switching devices in the control loop of terminal 4 to terminal 5 are opened.
		Extraneous light	Lock-out during or after completion of the control program **Examples:** – Flame not extinguished – Leaking fuel valves – Faulty flame supervision circuit
▲	**Interruption of startup sequence**	OPEN signal of changeover limit switch (red cam) has not been delivered to terminal 8	
		Terminals 6, 7 and 15 remain under voltage until fault has been corrected	
■	**Lock-out**		Defect in the flame supervision circuit, faulty flame signal, extraneous light
▼	**Interruption of startup sequence**		Position signal of auxiliary switch (orange cam) for the low flame position has not been delivered to terminal 8
			Terminals 6, 7 and 15 remain under voltage until fault has been corrected
1	**Lock-out**		No flame signal is present on completion of the safety time
I	**Lock-out**		Flame signal has been lost during operation



In the event of a burner lockout, more than two consecutive burner reset operations could cause damage to the installation. On the third lockout, contact the Aftersales Service.



If further lockouts or burner faults occur, interventions must only be made by qualified, authorised personnel (as indicated in this manual, and in compliance with the laws and regulations currently in force).

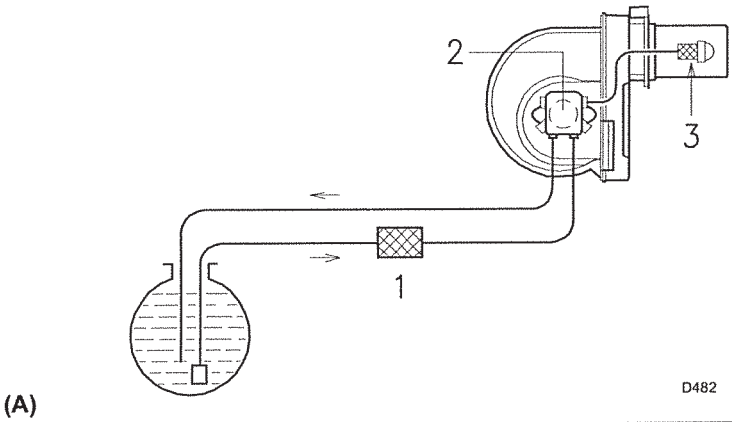

(A)

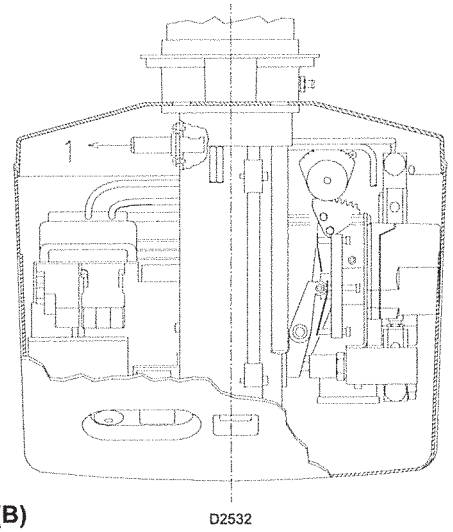

(B)

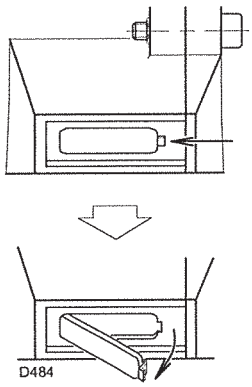

(C)

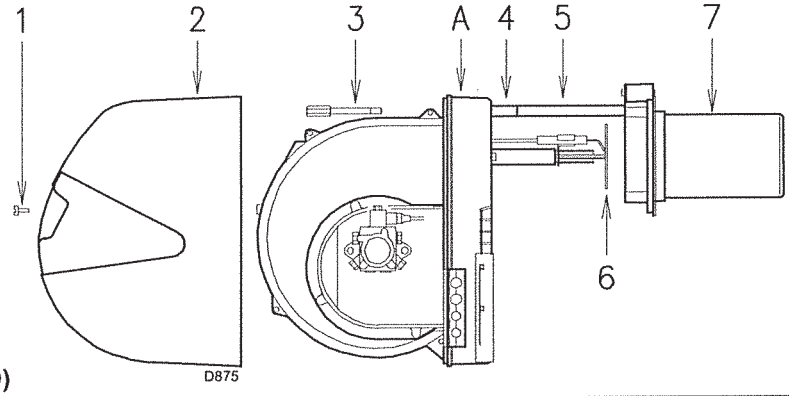

(D)

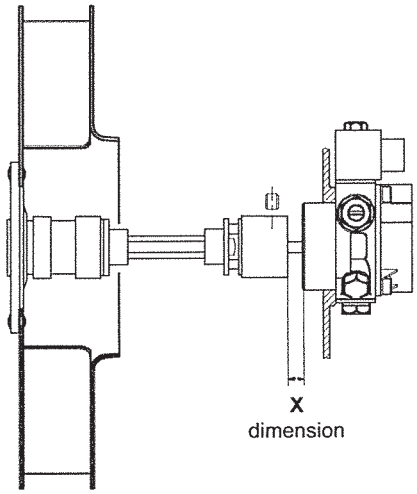

(E)

MAINTENANCE

Combustion
An analysis of the flue gases at the boiler outlet is required. Significant differences with respect to the previous measurements indicate the points where more care should be exercised during maintenance.

Pump
The pump delivery pressure must be stable at 290 PSI.
The suction must be less than 6.5 PSI.
Unusual noise must not be evident during pump operation.
If the pressure is found to be unstable or if the pump runs noisily, the flexible hose must be detached from the line filter and the fuel must be sucked from a tank located near the burner. This test permits the cause of the anomaly to be traced to either the suction line or the pump.
If the pump is found to be responsible, check to make sure that the filter is not dirty. The vacuum gauge is installed up-line from the filter and consequently will not indicate whether the filter is clogged or not.
If the problem lies in the suction line, check to make sure that the filter is clean and that air is not entering the piping.

Servomotor
Disengage servomotor and turn it backward and forward by hand to make sure it is free moving.

Filters (A)
Check the following filters:
• on line 1) • in pump 2) • at nozzle 3),
and clean or replace as required.
If rust or other impurities are observed inside the pump, use a separate pump to suck out any water and other impurities that may have deposited on the bottom of the tank.

Combustion head
Check to make sure that all the parts of the combustion head are in good condition, positioned correctly, free of all impurities, and that no deformation has been caused by operation at high temperatures.

Nozzle
Do not clean the nozzle orifices.
Replace the nozzles every 2-3 years or whenever necessary. Combustion must be checked after the nozzle have been changed.

Photocell (cad cell) (B)
Clean the glass cover from any dust that may have accumulated. Photocell 1) is held in position by a pressure fit and can therefore be removed by pulling it outward.

Flame inspection window (C)
Clean the glass.

Flexible hoses
Check to make sure that the flexible hoses are still in good condition.

Fuel tank
Every 5 years, or whenever necessary, suck out any water or other impurities present on the bottom of the tank using a separate pump.

Burner
Make sure that the screws are fully tightened.

TO OPEN THE BURNER (D):
- switch off the electrical power.
- Remove screw 1 and withdraw the casing 2).
- Unscrew screw 3).
- Fit the two extensions 4) supplied with the burner onto the slide bars 5) (models with long blast tube).
- Pull part A backward keeping it slightly raised to avoid damaging the disk 6) on blast tube 7).

Fuel pump and/or couplings replacement (E)
See fig. (E). Dimension X should be set as follows:
RL28/M - 1/4"
RL38/M - 3/16"
RL50/M - 5/16"

APPENDIX - ELECTRICAL CONNECTIONS

WARNING

NOTES

The electrical wirings must be carried out in conformity with the regulations in force in the countries of destination, and by qualified personnel.
Riello S.p.A. cannot accept any responsibility for modifications or connections other than those shown in these diagrams.

IMPORTANT

The burner is factory set for low - high operation and it must be connected to the OCR control device to control fuel oil valve V2.
If on - off operation is required, instead of control device OCR install a jumper lead between terminals T6 and T8 of burner terminal strip.

NOTES

FIELD WIRING CONNECTIONS

- For electrical connection use flexible cables according to local Regulations.
- The setting of the thermal overload must be according to the total burner amperage draw.
- The RL 38/M - 50/M three-phase burners leave the factory preset for:
  - **208-230V** power supply: only in this case, if 460V power supply is required, change the fan motor connection from delta to double star and change the setting of the thermal overload as well;
  - or **575V** power supply;
    depending on the burner model (see page 3).
- The RL 50/M single-phase burner leaves the factory preset for **120V** power supply: if 230V power supply is required, change the fan motor connection as shown in Figure below.

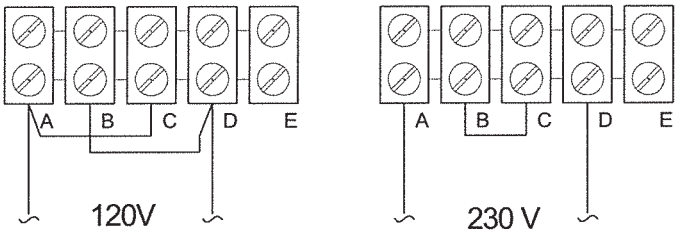

The RL 28/M - 38/M - 50/M burners have been type-approved for intermittent operation. This means they should compulsorily be stopped at least once every 24 hours to enable the control box to check its own efficiency at start-up. Burner halts are normally provided for automatically by the boiler load control system.
If this is not the case, a time switch should be fitted in series to **OC** to provide for burner shut-down at least once every 24 hours.

EXTERNAL FUSES (TO SEE THE ELECTRICAL DIAGRAM)

RL 28/M - 38/M - 50/M Single-phase burners				
	RL 28/M	RL 38/M	RL 50/M	
	120V	120V	120V	230V
FU1 (A)	T10	T10	T15	T10
FU2 (A)	T6			
RL 38/M- 50/M Three-phase burners				
	208/230V	460V	575V	
FU1 (A)	T6	T6	T4	
FU2 (A)	T6	T6	T6	

ATTENTION:
- Do not invert the neutral with the phase wire in the electricity supply line.
- Only use original spare parts to replace the components.

APPENDIX - BURNER FIRING RATES ACCORDING TO AIR DENSITY

Above sea level		Average barom. pressure		CORRECTION FACTOR **F**							
				Air temperature °F (°C)							
ft	m	" W.C.	mbar	0 (0°C)	41 (5°C)	50 (10°C)	59 (15°C)	68 (20°C)	77 (25°C)	86 (30°C)	104 (40°F)
0	0	399	1013	1,087	1,068	1,049	1,031	1,013	0,996	0,980	0,948
329	100	394	1000	1,073	1,054	1,035	1,017	1,000	0,983	0,967	0,936
658	200	389	989	1,061	1,042	1,024	1,006	0,989	0,972	0,956	0,926
987	300	385	978	1,050	1,031	1,013	0,995	0,978	0,962	0,946	0,916
1316	400	380	966	1,037	1,018	1,000	0,983	0,966	0,950	0,934	0,904
1645	500	376	955	1,025	1,007	0,989	0,972	0,955	0,939	0,923	0,894
1974	600	372	944	1,013	0,995	0,977	0,960	0,944	0,928	0,913	0,884
2303	700	367	932	1,000	0,982	0,965	0,948	0,932	0,916	0,901	0,872
2632	800	363	921	0,988	0,971	0,954	0,937	0,921	0,906	0,891	0,862
2961	900	358	910	0,977	0,959	0,942	0,926	0,910	0,895	0,880	0,852
3290	1000	354	898	0,964	0,946	0,930	0,914	0,898	0,883	0,868	0,841
3947	1200	346	878	0,942	0,925	0,909	0,893	0,878	0,863	0,849	0,822
4605	1400	337	856	0,919	0,902	0,886	0,871	0,856	0,842	0,828	0,801
5263	1600	329	836	0,897	0,881	0,866	0,851	0,836	0,822	0,808	0,783
5921	1800	321	815	0,875	0,859	0,844	0,829	0,815	0,801	0,788	0,763
6579	2000	313	794	0,852	0,837	0,822	0,808	0,794	0,781	0,768	0,743

The FIRING RATE area values have been obtained considering a surrounding temperature of 68°F (20°C), and an atmospheric pressure of 398" W.C. and with the combustion head adjusted as shown on page 6.
The burner may be required to operate with combustion air at a higher temperature and/or at higher altitudes.
Heating of air and increase in altitude produce the same effect: the expansion of the air volume, i.e. the reduction of air density.
The burner fan's delivery remains substantially the same, but the oxygen content per cubic meter and the fan's head are reduced.
It is therefore important to know if the maximum output required of the burner at a given combustion chamber pressure remains within the burner's firing rate range even at different temperature and altitude conditions. Proceed as follows to check the above:

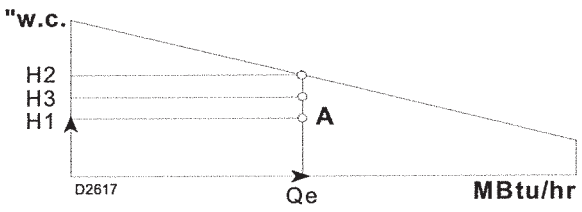

(B)

1 - Find the correction factor F in the Table (A) for the plant's air temperature and altitude.
2 - Divide the burner's delivery Q by F in order to obtain the equivalent delivery Qe:

Qe = Q : F (MBtu/hr)

3 - In the firing rate range of the burner, Fig. (B), indicate the work point defined by:
Qe = equivalent delivery
H1 = combustion chamber pressure
The resulting point A must remain within the firing rate range.
4 - Plot a vertical line from Point A as shown in Figure (B) and find the maximum pressure H2 of the firing rate.
5 - Multiply H2 by F to obtain the maximum reduced pressure H3 of the firing rate.

H3 = H2 x F (" W.C.)

If H3 is greater than H1, as shown in Fig. (B), the burner delivers the output required.
If H3 is lower than H1, the burner's delivery must be reduced. A reduction in delivery is accompanied by a reduction of the pressure in the combustion chamber:
Qr = reduced delivery
H1r = reduced pressure

$$H1r = H1 \times \left(\frac{Qr}{Q}\right)^2$$

Example, a 5% delivery reduction:

$Qr = Q \times 0.95$

$H1r = H1 \times (0.95)^2$

Steps 2 - 5 must now be repeated using the new Qr and H1r values.

Important: the combustion head must be adjusted in respect to the equivalent delivery Qe.

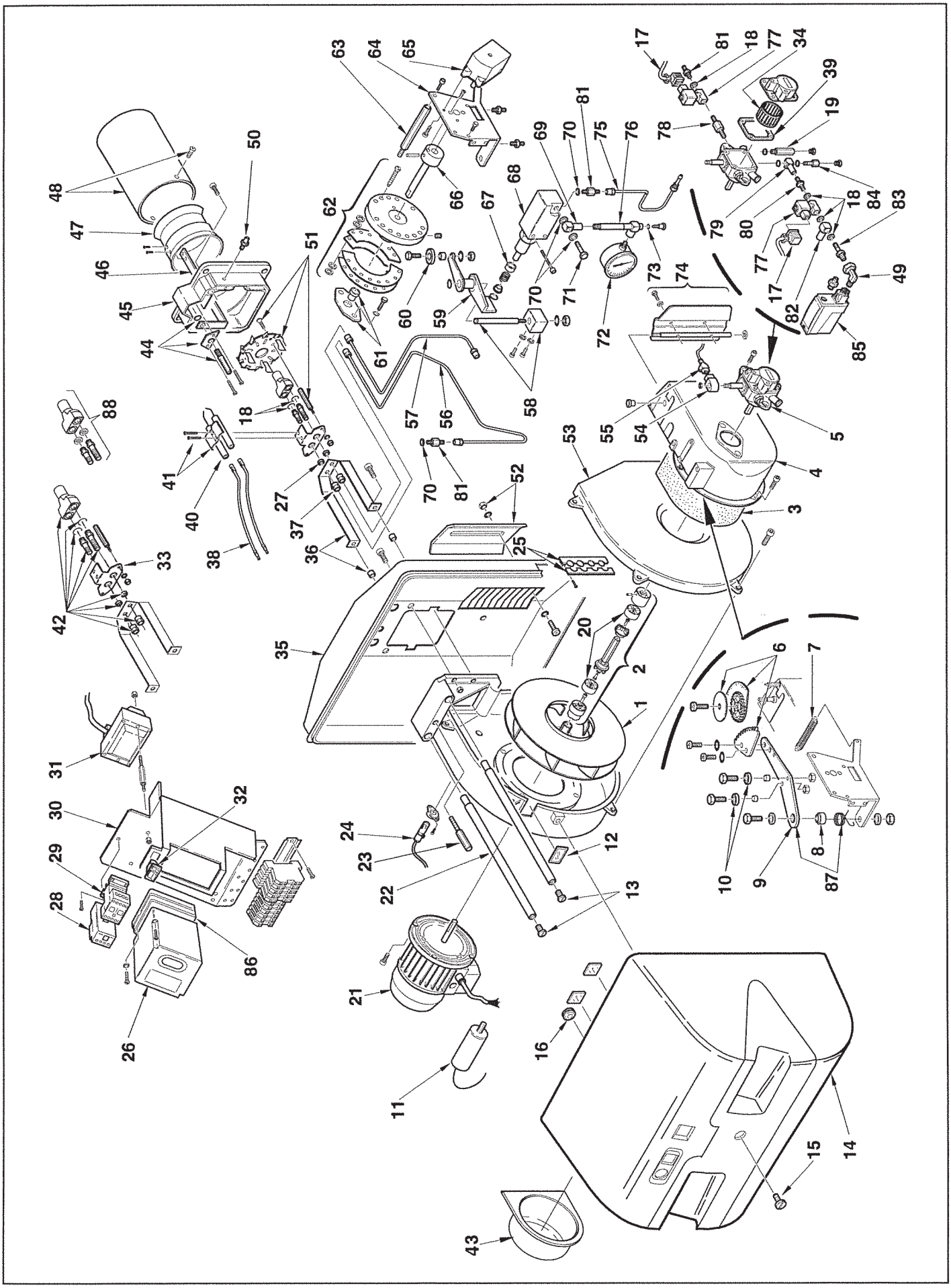
1
2
3
4
5
6
7
8
9
10
11
12
13
14
15
16
17
18
20
21
22
23
24
25
26
27
28
29
30
31
32
33
34
35
36
37
38
39
40
41
42
43
44
45
46
47
48
49
50
51
52
53
54
55
56
57
58
59
60
61
62
63
64
65
66
67
68
69
70
71
72
73
74
75
76
77
78
79
80
81
82
83
84
85
86
87
88

N.	CODE	3471070	3471470	3471470	3471270	3471670	3471670	3471675	DESCRIPTION	BURNER SERIAL NUMBER	*
1	**3012985**	•							FAN		C
1	**3012986**		•	•	•				FAN		C
1	**3003760**					•	•	•	FAN		C
2	**3003758**	•	•	•	•	•	•	•	DRIVE COUPLING		A
3	**3003830**	•	•	•	•	•	•	•	SOUND DAMPING		
4	**3012090**	•	•	•	•	•	•	•	AIR INTAKE		
5	**3013030**	•	•	•	•	•	•	•	PUMP		C
6	**3012063**	•	•	•	•	•	•	•	GRADUATE SECTOR		
7	**3003879**	•	•	•	•	•	•	•	SPRING	≤ 02394000000	A
8	**3003843**	•	•	•	•	•	•	•	SCREW		C
9	**3012064**	•	•	•	•	•	•	•	LEVER	≤ 02394000000	C
10	**3003841**	•	•	•	•	•	•	•	BEARING		B
11	**3012988**	•			•				CAPACITOR 45 µF		
11	**20063531**							•	CAPACITOR 20 µF		
12	**3003763**	•	•	•	•	•	•	•	INSPECTION WINDOW		
13	**3003776**	•	•	•	•	•	•	•	SCREW		
14	**3012987**	•	•	•	•	•	•		COVER		
14	**3013873**							•	COVER		
15	**3003766**	•	•	•	•	•	•	•	SCREW		
16	**3007627**	•	•	•	•	•	•	•	MEMBRAN		
17	**3012953**	•	•	•	•	•	•	•	SOCKET		
18	**3007079**	•	•	•	•	•	•	•	SEAL		C
19	**3013037**	•	•	•	•	•	•	•	CONNECTOR		C
20	**3012622**	•	•	•	•	•	•	•	DRIVE DISK		
21	**3012993**	•			•				MOTOR 120V		C
21	**3012994**		•		•	•			MOTOR 208-230/460V		C
21	**3013057**			•			•		MOTOR 575V		C
21	**3013869**							•	MOTOR 120V		C
22	**3003777**	•	•	•	•	•	•	•	BAR		C
23	**3003778**	•	•	•	•	•	•	•	SHORT SHAFT		
24	**3006216** **C5360027**	•	•	•	•	•	•	•	P.E. CELL		A
25	**3003780**	•	•	•	•	•	•	•	FAIRLEAD		
26	**3012933** **C5830009**	•	•	•	•	•	•	•	CONTROL BOX LAL 2.25		B
27	**3012127**	•	•	•	•	•	•	•	SPACER		
28	**3012991**		•			•			OVERLOAD 208-230/460V		C
28	**3013023**			•			•		OVERLOAD 575V		C
29	**3012989**	•			•				CONTACTOR		C
29	**3012990**		•	•		•	•		CONTACTOR		C
29	**20006633v**							•	CONTACTOR		C
30	**3012747**	•	•	•	•	•	•		SUPPORT		
30	**3013871**							•	SUPPORT		
31	**3012938**	•	•	•	•	•	•	•	TRANSFORMER		C
32	**3012080**	•	•	•	•	•	•	•	SWITCH		C
33	**3012092**	•	•	•	•	•	•	•	SUPPORT		
34	**3003082**	•	•	•	•	•	•	•	FILTER		A
35	**3012089**	•	•	•	•	•	•		FRONT SHIELD		
35	**3013872**							•	FRONT SHIELD		
36	**3012094**	•	•	•	•	•	•	•	SUPPORT		

N.	CODE	3471070	3471470	3471470	3471270	3471670	3471670	3471675	DESCRIPTION	BURNER SERIAL NUMBER	*
37	3012095	•	•	•	•	•	•	•	NUT		
38	3012995	•	•	•	•	•	•	•	H.T.LEAD		A
39	3003081	•	•	•	•	•	•	•	SEAL		C
40	3003796	•	•	•	•	•	•	•	ELECTRODE		A
41	3003495	•	•	•	•	•	•	•	U BOLT		
42	20066897	•	•	•	•	•	•	•	NOZZLE HOLDER ASSEMBLY		C
43	3013874							•	PROTECTION		
44	3003797	•	•	•	•	•	•	•	CONTROL DEVICE		
45	3003798	•	•	•	•				FRONT PIECE		
45	3003838					•	•	•	FRONT PIECE		
46	3012098	•							SQUARE		
46	3012099		•	•	•				SQUARE		
46	3012100					•	•	•	SQUARE		
47	3003805	•	•	•	•				SHUTTE		C
47	3003806					•	•	•	SHUTTER		C
48	3012101	•							END CONE		B
48	3012102		•	•	•				END CONE		B
48	3012103					•	•	•	END CONE		B
49	3013064	•	•	•	•	•	•	•	CONNECTOR		C
50	3003893	•	•	•	•	•	•	•	CONNECTOR		C
51	3012104	•							DIFFUSER DISC		A
51	3012106		•	•	•				DIFFUSER DISC		A
51	3012108					•	•	•	DIFFUSER DISC		A
52	3012110	•	•	•	•	•	•	•	ANCHOR PLATE		
53	3012111	•	•	•	•	•	•	•	HALF-SHELL		
54	3013016	•	•	•	•	•	•	•	COIL		B
55	3013015	•	•	•	•	•	•	•	LEAD		A
56	3012112	•	•	•	•	•	•	•	TUBE		
57	3012113	•	•	•	•	•	•	•	TUBE		
58	3012114	•	•	•	•	•	•	•	SHORT SHAFT		
59	3012115	•	•	•	•	•	•	•	LEVER		C
60	3012116	•	•	•	•	•	•	•	BEARING		
61	3012117	•	•	•	•	•	•	•	ANCHOR PLATE		
62	3012118	•	•	•	•	•	•	•	CAM ASSEMBLY		
63	3013005	•	•	•	•	•	•	•	STUD		
64	3013032	•	•	•	•	•	•	•	SUPPORT		
65	3013008	•	•	•	•	•	•	•	SERVOMOTOR		B
66	3013033	•	•	•	•	•	•	•	SHAFT		
67	3012121	•	•	•	•	•	•	•	SEAL		C
68	3012122	•	•	•	•	•	•	•	MODULATOR		B
69	3012123	•	•	•	•	•	•	•	CONNECTOR		C
70	3007077	•	•	•	•	•	•	•	SEAL		C
71	3012617	•	•	•	•	•	•	•	SCREW		C
72	3006140	•	•	•	•	•	•	•	PRESSURE GAUGE		A
73	3007169	•	•	•	•	•	•	•	O RING		A
74	3013034	•	•	•	•	•	•	•	AIR DAMPER ASSEMBLY		
75	3012124	•	•	•	•	•	•	•	TUBE		
76	3006540	•	•	•	•	•	•	•	NEEDLE VALVE		B

N.	CODE	3471070	3471470	3471470	3471270	3471670	3471670	3471675	DESCRIPTION	BURNER SERIAL NUMBER	*
77	**3012952**	•	•	•	•	•	•	•	NEEDLE VALVE		B
78	**3013035**	•	•	•	•	•	•	•	CONNECTOR		C
79	**3013036**	•	•	•	•	•	•	•	CONNECTOR		C
80	**3009087**	•	•	•	•	•	•	•	CONNECTOR		C
81	**3006720**	•	•	•	•	•	•	•	CONNECTOR		C
82	**3006722**	•	•	•	•	•	•	•	CONNECTOR		C
83	**3013058**	•	•	•	•	•	•	•	CONNECTOR		C
84	**3012954**	•	•	•	•	•	•	•	SCREW		C
85	**3012384**	•	•	•	•	•	•	•	OIL PRESSURE SWITCH		B
86	**3012950 C5360001**	•	•	•	•	•	•	•	CONTROL BOX BASE		
87	**3013478**	•	•	•	•	•	•	•	SPRING - LEVER	≥ 02404000001	A
88	**20088026**	•	•	•	•	•	•	•	NOZZLE HOLDER		C

*

ADVISED PARTS

A = Spare parts for minimum fittings
A+B = Spare parts for basic safety fittings
A+B+C = Spare parts for extended safety fittings

BURNER START UP REPORT

Model number:		Serial number:	
Project name:		Start-up date:	
Installing contractor:		Phone number:	

OIL OPERATION

Oil supply pressure:		CO_2: Low Fire		High Fire	
Oil suction pressure:		O_2: Low Fire		High Fire	
Control Power Supply:		CO: Low Fire		High Fire	
Burner Firing Rate:		NO_X: Low Fire		High Fire	
Low Fire Flame Signal:		Net Stack Temp - Low Fire:		High Fire	
High Fire Flame Signal:		Comb. Efficiency - Low Fire:		High Fire	
Low Fire Nozzle Size:		Overfire Draft:			
High Fire Nozzle Size:		Smoke number:			

CONTROL SETTINGS

Operating Setpoint:		Low Oil Pressure:	
High Limit Setpoint:		High Oil Pressure:	
Low Gas Pressure:		Flame Safeguard Model Number:	
High Gas Pressure:		Modulating Signal Type:	

NOTES

RIELLO

RIELLO S.p.A.
I-37045 Legnago (VR)
Tel.: +39.0442.630111
http:// www.riello.com

RIELLO

35 Pond Park Road
Hingham, Massachusetts,
U.S.A. 02043

RIELLO BURNERS NORTH AMERICA
1-800-4-RIELLO
1-800-474-3556

http://www.riello.ca

2165 Meadowpine Blvd
Mississauga, Ontario
Canada L5N 6H6

Subject to modifications

C651010 05/2013

* R-SERIES SET UP GUIDE

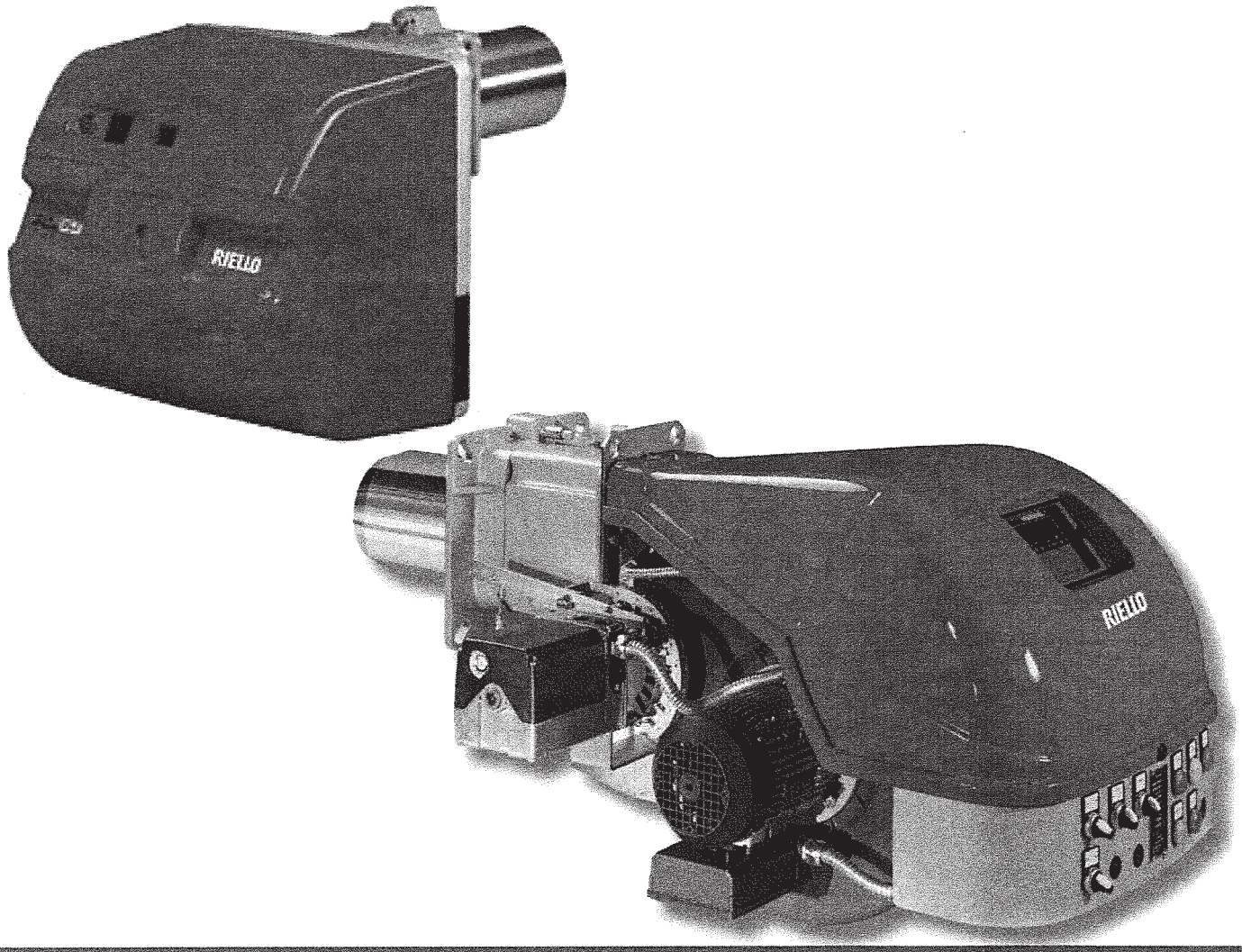

RIELLO R-SERIES SET UP GUIDE
for BOSCH Boiler Ranges
G515
G615
SB625
SB745

RIELLO

CROSS REFERENCE

Page		BOILER	BURNER MODEL										
			RL28/2	RL28/M	RL38/2	RL38/M	RL50/2	RL50/M	RL70/2	RL70/M	RL100/2	RL100/M	RL130/2	RL130/M
5	OIL	G515/7	●	●										
		G515/8	●	●										
		G515/9			●	●								
		G515/10			●	●								
		G515/11					●	●						
		G515/12					●	●						
8		G615/9							●	●				
		G615/10							●	●				
		G615/11							●	●				
		G615/12									●	●		
		G615/13									●	●		
		G615/14									●	●		
		G615/15									●	●		
		G615/16											●	●

Page		BOILER	BURNER MODEL										
			RS28/1	RS28/M	RS38/1	RS38/M	RS45/M LN	RS50/M	RS68/M LN	RS70/M	RS100/M	RS120/M LN	RS130/M	RS160/M LN
6	GAS	G515/7	●	●			●							
		G515/8	●	●			●							
		G515/9			●	●	●							
		G515/10			●	●	●							
		G515/11					●	●						
		G515/12						●	●					
9		G615/9							●	●				
		G615/10							●	●				
		G615/11							●	●				
		G615/12									●	●		
		G615/13									●	●		
		G615/14									●	●		
		G615/15										●	●	
		G615/16											●	●

Page		BOILER	BURNER MODEL					
			RLS28	RLS38	RLS50	RLS70	RLS100	RLS130
7	OIL	G515/7	●					
		G515/8	●					
		G515/9		●				
		G515/10		●				
		G515/11			●			
		G515/12			●			
10		G615/9				●		
		G615/10				●		
		G615/11				●		
		G615/12					●	
		G615/13					●	
		G615/14					●	
		G615/15						●
		G615/16						●

CROSS REFERENCE

Page		BOILER	BURNER MODEL								
			G750	G900	RS28/M RS28/E	RS38/M RS38/E	RS50/M RS50/E	RS70/M RS70/E	RS100/M RS100/E	RS130/M RS130/E	RS190/M RS190/E
11	GAS	SB625 160	●	●							
		SB625 220			●						
		SB625 290			●						
		SB625 370				●					
		SB625 480					●				
		SB625 640						●			
12		SB745 800							●		
		SB745 1050							●		
		SB745 1300								●	
		SB745 1550									●

Page		BOILER	BURNER MODEL						
			RLS28	RLS38	RLS50	RLS70	RLS100	RLS130	RLS190
13	DUAL FUEL	SB625 220	●						
		SB625 290	●						
		SB625 370		●					
		SB625 480			●				
		SB625 640				●			
14		SB745 800					●		
		SB745 1050					●		
		SB745 1300						●	
		SB745 1550							●

Page		BOILER	BURNER MODEL			
			RS45/M LN RS45/E LN	RS68/M LN RS68/E LN	RS120/M LN RS120/E LN	RS160/M LN RS160/E LN
11	GAS Low NOx	SB625 290	●			
		SB625 370	●			
		SB625 480	●			
		SB625 640		●		
12		SB745 800			●	
		SB745 1050			●	
		SB745 1300				●
		SB745 1550				●

Page		BOILER	BURNER MODEL		
			RLS68/E LN	RLS 120/E LN	RLS160/E LN
13	DUAL FUEL Low NOx	SB625 640	●		
14		SB745 800		●	
		SB745 1050		●	
		SB745 1300			●
		SB745 1550			●

Page		BOILER	BURNER MODEL			
			RX250	RX300	RX400	RX500
11	GAS Premix	SB625 160	●			
		SB625 220		●		
		SB625 290			●	
		SB625 370			●	
		SB625 480				●

OIL BURNER SET-UP GUIDE
BUDERUS G515 SERIES CAST IRON BOILERS

BOILER MODEL	RIELLO BURNER MODEL	IBR FUEL INPUT ± 5%		CHAMBER PRESSURE (INCHES W.C.)	BREECH PRESSURE (INCHES W.C.)	COMB. HEAD SETTING	MANIFOLD (INCHES W.C.)	RETURN PSIG		OIL BURNER NOZZLE (PSIG ± 5%)	
		OIL (US GPH)	GAS (kBTU/H)					MIN	MAX	PUMP PRESSURE	NOZZLE (SOLID SPRAY)
G515/7	RL 28/2	6.9	N/A	0.22	0.0	3.0	N/A			175 - 1ST STAGE	2.75 X 60°
										175 - 2ND STAGE	2.50 X 60°
	RL28/M							100	220	290	40 kg/h 45° A4
G515/8	RL 28/2	8.4		0.48	0.0	5.0				175 - 1ST STAGE	3.25 X 60°
										175 - 2ND STAGE	3.00 X 60°
	RL28/M							100	200	290	50 kg/h 45° A4
G515/9	RL 38/2	10.0		0.55	0.0	6.0				175 - 1ST STAGE	4.00 X 60°
										175 - 2ND STAGE	3.50 X 60°
	RL38/M					4.0		100	220	290	50 kg/h 45° A4
G515/10	RL 38/2	11.6		1.00	0.0	6.0				175 - 1ST STAGE	4.50 X 60°
										175 - 2ND STAGE	4.50 X 60°
	RL38/M							100	210	290	60 kg/h 45° A4
G515/11	RL 50/2	13.0		1.17	0.0	6.0				175 - 1ST STAGE	5.00 X 60°
										175 - 2ND STAGE	5.00 X 60°
	RL50/M							100	220	290	60 kg/h 45° A4
G515/12	RL 50/2	14.6		1.11	0.0	6.0				175 - 1ST STAGE	5.50 X 60°
										175 - 2ND STAGE	5.50 X 60°
	RL50/M							100	220	290	70 kg/h 45° A4

NOZZLE SELECTION NOTE:

- NOZZLE MANUFACTURERS:
  2 stages: DELAVAN, HAGO, DANFOSS - modulating: BERGONZO
- NOZZLE SPRAY TYPES - SOLID SPRAY RECOMMENDED
- NOZZLE SIZES & PUMP PRESSURE BASED ON CALCULATED OUTPUT
- RETURN PRESSURES BASED ON BERGONZO A4 NOZZLES CHART

ALL SETTINGS ARE PRELIMINARY COMMISSIONING SETTINGS.
FURTHER ADJUSTMENTS MAY BE NECESSARY DUE TO SITE INSTALLATION AND COMBUSTION CONDITIONS
BREECH PRESSURE RANGE FROM 0.0 TO -0.03 INCHES WC

GAS BURNER SET-UP GUIDE
BUDERUS G515 SERIES CAST IRON BOILERS

BOILER MODEL	RIELLO BURNER MODEL	IBR FUEL INPUT ± 5%		CHAMBER PRESSURE (INCHES W.C.)	BREECH PRESSURE (INCHES W.C.)	COMBUSTION HEAD SETTING		MANIFOLD (INCHES W.C.)		PILOT MANIFOLD PRESSURE RANGE (INCHES W.C.)
		OIL (US GPH)	GAS (kBTU/H)			AIR ADJ.	GAS ADJ.	GROSS	NET	
G515/7	RS 28/1 RS 28/M RS 45/M LN	N/A	995	0.22	0.0	A = 4 R1 = 2.0 R2 = 1.0	B = 4 R3 = 0.0	2.42 2.56	2.20 2.34	3.5 - 4.5
G515/8	RS 28/1 RS 28/M RS 45/M LN		1216	0.48	0.0	A = 5 A = 6 R1 = 3.0 R2 = 2.0	B = 5 B = 6 R3 = 1.0	3.38 3.70	2.90 3.22	3.5 - 4.5
G515/9	RS 38/1 RS 38/M RS 45/M LN		1438	0.55	0.0	A = 4 R1 = 5.0 R2 = 2.0	B = 4 R3 = 1.0	2.68 4.53	2.13 3.98	3.5 - 4.5
G515/10	RS 38/1 RS 38/M RS 45/M LN		1660	1.00	0.0	A = 6 R1 = 6.0 R2 = 4.0	B = 6 R3 = 2.0	3.60 5.52	2.60 4.52	3.5 - 4.5
G515/11	RS 50/M RS 45/M LN		1881	1.17	0.0	A = 4 R1 = 6.0 R2 = 5.0	B = 4 R3 = 4.0	3.42 6.26	2.25 5.09	3.5 - 4.5
G515/2	RS 50/M RS 68/M LN		2103	1.11	0.0	A = 6 R1 = 5.0	B = 6 R2 = 3.0	3.70 3.43	2.59 2.32	3.5 - 4.5

GAS MANIFOLD NOTE:

- MANIFOLD PRESSURE PROVIDED BASED ON CHAMBER PRESSURES SHOWN IN CHART
- BASED ON CO_2 LEVELS OF 9 - 10%
- BASED ON SEA LEVEL
- NATURAL GAS HH_V = 1010 BTU PER FT^3/Hr.
- DATA BASED ON 0 INCHES WC BREECH PRESSURE

ALL SETTINGS ARE PRELIMINARY COMMISSIONING SETTINGS.
FURTHER ADJUSTMENTS MAY BE NECESSARY DUE TO SITE INSTALLATION AND COMBUSTION CONDITIONS
BREECH PRESSURE RANGE FROM 0.0 TO -0.03 INCHES WC

DUAL FUEL BURNER SET-UP GUIDE
BUDERUS G515 SERIES CAST IRON BOILERS

BOILER MODEL	RIELLO BURNER MODEL	IBR FUEL INPUT ± 5%		CHAMBER PRESSURE (INCHES W.C.)	BREECH PRESSURE (INCHES W.C.)	COMB. HEAD SETTING	MANIFOLD (INCHES W.C.)		PILOT MANIFOLD PRESSURE RANGE (INCHES W.C.)	OIL BURNER NOZZLE (PSIG ± 5%)	
		OIL (US GPH)	GAS (kBTU/H)				GROSS	NET		PUMP PRESSURE	NOZZLE (SOLID SPRAY)
G515/7	RLS 28	6.9	995	0.22	0.0	4.0	3.69	3.47	3.5 - 4.5	175 - 1ST STAGE	2.75 X 60°
										175 - 2ND STAGE	2.50 X 60°
G515/8	RLS 28	8.4	1216	0.48	0.0	6.0	4.74	4.26	3.5 - 4.5	175 - 1ST STAGE	3.25 X 60°
										175 - 2ND STAGE	3.00 X 60°
G515/9	RLS 38	10.0	1438	0.55	0.0	4.0	4.92	4.37	3.5 - 4.5	175 - 1ST STAGE	4.00 X 60°
										175 - 2ND STAGE	3.50 X 60°
G515/10	RLS 38	11.6	1660	1.00	0.0	6.0	6.10	5.10	3.5 - 4.5	175 - 1ST STAGE	4.50 X 60°
										175 - 2ND STAGE	4.50 X 60°
G515/11	RLS 50	13.0	1881	1.17	0.0	4.0	5.84	4.67	3.5 - 4.5	175 - 1ST STAGE	5.00 X 60°
										175 - 2ND STAGE	5.00 X 60°
G515/12	RLS 50	14.6	2103	1.11	0.0	6.0	6.36	5.25	3.5 - 4.5	175 - 1ST STAGE	5.50 X 60°
										175 - 2ND STAGE	5.50 X 60°

NOZZLE SELECTION NOTE:

- NOZZLE MANUFACTURERS:
  2 stages: DELAVAN, HAGO, DANFOSS - modulating: BERGONZO
- NOZZLE SPRAY TYPES - SOLID SPRAY RECOMMENDED
- NOZZLE SIZES & PUMP PRESSURE BASED ON CALCULATED OUTPUT
- RETURN PRESSURES BASED ON BERGONZO A4 NOZZLES CHART

GAS MANIFOLD NOTE:

- MANIFOLD PRESSURE PROVIDED BASED ON CHAMBER PRESSURES SHOWN IN CHART
- BASED ON CO_2 LEVELS OF 9 - 10%
- BASED ON SEA LEVEL
- NATURAL GAS HH_V = 1010 BTU PER FT^3/Hr.
- DATA BASED ON 0 INCHES WC BREECH PRESSURE

ALL SETTINGS ARE PRELIMINARY COMMISSIONING SETTINGS.
FURTHER ADJUSTMENTS MAYBE NECESSARY DUE TO SITE INSTALLATION AND COMBUSTION CONDITIONS
BREECH PRESSURE RANGE FROM 0.0 TO -0.03 INCHES WC

OIL BURNER SET-UP GUIDE
BUDERUS G615 SERIES CAST IRON BOILERS

BOILER MODEL	RIELLO BURNER MODEL	IBR FUEL INPUT ± 5% OIL (US GPH)	IBR FUEL INPUT ± 5% GAS (kBTU/H)	CHAMBER PRESSURE (INCHES W.C.)	BREECH PRESSURE (INCHES W.C.)	COMB. HEAD SETTING	MANIFOLD (INCHES W.C.)	RETURN PSIG MIN	RETURN PSIG MAX	OIL BURNER NOZZLE (PSIG ± 5%) PUMP PRESSURE	OIL BURNER NOZZLE (PSIG ± 5%) NOZZLE (SOLID SPRAY)
G615/9	RL 70/2	16	N/A	0.85	0.1	3.0	N/A			175 - 1ST STAGE	6.00 X 60°
	RL70/M									175 - 2ND STAGE	6.00 X 60°
								100	240	290	60 kg/h 45° A4
G615/10	RL 70/2	18.5		1.07	0.1	6.0				175 - 1ST STAGE	7.00 X 60°
	RL70/M									175 - 2ND STAGE	7.00 X 60°
								100	240	290	70 kg/h 45° A4
G615/11	RL 70/2	21.0		1.30	0.1	8.0				175 - 1ST STAGE	8.00 X 60°
	RL70/M									175 - 2ND STAGE	8.00 X 60°
								100	220	290	90 kg/h 45° A4
G615/12	RL 100/2	23.5		1.60	0.1	4.0				175 - 1ST STAGE	9.00 X 60°
	RL100/M									175 - 2ND STAGE	9.00 X 60°
								100	240	290	90 kg/h 45° A4
G615/13	RL 100/2	26.0		1.40	0.1	5.0				175 - 1ST STAGE	10.00 X 60°
	RL 100/M									175 - 2ND STAGE	10.00 X 60°
								100	210	290	100 kg/h 45° A4
G615/14	RL 100/2	28.5		1.40	0.1	7.0				175 - 1ST STAGE	11.00 X 60°
	RL 100/M									175 - 2ND STAGE	11.00 X 60°
								100	230	290	100 kg/h 45° A4
G615/15	RL 100/2	31		1.40	0.1	9.0				175 - 1ST STAGE	12.00 X 60°
	RL 100/M									175 - 2ND STAGE	11.50 X 60°
								100	230	290	110 kg/h 45° A4
G615/16	RL 130/2	33.5		1.50	0.1	9.0				175 - 1ST STAGE	13.00 X 60°
	RL 130/M									175 - 2ND STAGE	12.50 X 60°
								100	220	290	120 kg/h 45° A4

NOZZLE SELECTION NOTE:

- NOZZLE MANUFACTURERS:
  2 stages: DELAVAN, HAGO, DANFOSS - modulating: BERGONZO
- NOZZLE SPRAY TYPES - SOLID SPRAY RECOMMENDED
- NOZZLE SIZES & PUMP PRESSURE BASED ON CALCULATED OUTPUT
- RETURN PRESSURES BASED ON BERGONZO A4 NOZZLES CHART

ALL SETTINGS ARE PRELIMINARY COMMISSIONING SETTINGS.
FURTHER ADJUSTMENTS MAY BE NECESSARY DUE TO SITE INSTALLATION AND COMBUSTION CONDITIONS
BREECH PRESSURE RANGE FROM 0.5 TO 0.2 INCHES WC

GAS BURNER SET-UP GUIDE
BUDERUS G615 SERIES BOILERS

BOILER MODEL	RIELLO BURNER MODEL	IBR FUEL INPUT ± 5% OIL (US GPH)	IBR FUEL INPUT ± 5% GAS (kBTU/H)	CHAMBER PRESSURE (INCHES W.C.)	BREECH PRESSURE (INCHES W.C.)	COMBUSTION HEAD SETTING AIR ADJ.	COMBUSTION HEAD SETTING GAS ADJ.	MANIFOLD (INCHES W.C.) GROSS	MANIFOLD (INCHES W.C.) NET	PILOT MANIFOLD PRESSURE RANGE (INCHES W.C.)
G615/9	RS 70/M	N/A	2309	0.85	0.1	A = 3	B = 3	3.33	2.48	3.5 - 4.5
	RS 68/M LN					R1 = 4.0	R2 = 4.0	3.55	2.70	
G615/10	RS 70/M		2670	1.07	0.1	A = 6	B = 6	4.27	3.20	3.5 - 4.5
	RS 68/M LN					R1 = 2.0	R2 = 6.0	4.53	3.46	
G615/11	RS 70/M		3031	1.30	0.1	A = 8	B = 8	5.25	3.95	3.5 - 4.5
	RS 68/M LN					R1 = 1.0	R2 = 7.0	5.47	4.17	
G615/12	RS 100/M		3392	1.60	0.1	A = 4	B = 4	3.90	2.30	3.5 - 4.5
	RS 120/M LN					R1 = 3.0	R2 = 4.0	6.40	4.80	
G615/13	RS 100/M		3753	1.40	0.1	A = 6	B = 6	4.20	2.80	3.5 - 4.5
	RS 120/M LN					R1 = 2.0	R2 = 5.0	7.40	6.00	
G615/14	RS 100/M		4113	1.40	0.1	A = 8	B = 8	4.60	3.20	3.5 - 4.5
	RS 120/M LN					R1 = 1.0	R2 = 6.0	8.20	6.80	
G615/15	RS 130/M		4474	1.40	0.1	A = 6	B = 6	3.75	2.35	3.5 - 4.5
	RS 120/M LN					R1 = 0.0	R2 = 9.0	9.00	7.60	
G615/16	RS 130/M		4835	1.50	0.1	A = 8	B = 8	4.15	2.65	3.5 - 4.5
	RS 160/M LN					R1 = 6.0	R2 = 0.0	4.77	3.27	

GAS MANIFOLD NOTE:

- MANIFOLD PRESSURE PROVIDED BASED ON CHAMBER PRESSURES SHOWN IN CHART
- BASED ON CO_2 LEVELS OF 9 - 10%
- BASED ON SEA LEVEL
- NATURAL GAS HH_V = 1010 BTU PER FT^3/Hr.
- DATA BASED ON 0.1 INCHES WC BREECH PRESSURE

ALL SETTINGS ARE PRELIMINARY COMMISSIONING SETTINGS.
FURTHER ADJUSTMENTS MAY BE NECESSARY DUE TO SITE INSTALLATION AND COMBUSTION CONDITIONS
BREECH PRESSURE RANGE FROM 0.05 TO 0.2 INCHES WC

DUAL FUEL BURNER SET-UP GUIDE
BUDERUS G615 SERIES CAST IRON BOILERS

BOILER MODEL	RIELLO BURNER MODEL	IBR FUEL INPUT ± 5%		CHAMBER PRESSURE (INCHES W.C.)	BREECH PRESSURE (INCHES W.C.)	COMB. HEAD SETTING	MANIFOLD (INCHES W.C.)		PILOT MANIFOLD PRESSURE RANGE (INCHES W.C.)	OIL BURNER NOZZLE (PSIG ± 5%)	
		OIL (US GPH)	GAS (kBTU/H)				GROSS	NET		PUMP PRESSURE	NOZZLE (SOLID SPRAY)
G615/9	RLS 70	16	2309	0.85	0.1	3.0	3.13	2.28	3.5 - 4.5	175 - 1ST STAGE	6.00 X 60°
										175 - 2ND STAGE	6.00 X 60°
G615/10	RLS 70	18.5	2670	1.07	0.1	6.0	3.42	2.35	3.5 - 4.5	175 - 1ST STAGE	7.00 X 60°
										175 - 2ND STAGE	7.00 X 60°
G615/11	RLS 70	21.0	3031	1.30	0.1	8.0	3.72	2.42	3.5 - 4.5	175 - 1ST STAGE	8.00 X 60°
										175 - 2ND STAGE	8.00 X 60°
G615/12	RLS 100	23.5	3392	1.60	0.1	3.0	5.10	3.50	3.5 - 4.5	175 - 1ST STAGE	9.00 X 60°
										175 - 2ND STAGE	9.00 X 60°
G615/13	RLS 100	26.0	3753	1.40	0.1	5.0	5.05	3.65	3.5 - 4.5	175 - 1ST STAGE	10.00 X 60°
										175 - 2ND STAGE	10.00 X 60°
G615/14	RLS 100	28.5	4113	1.40	0.1	7.0	5.22	3.82	3.5 - 4.5	175 - 1ST STAGE	11.00 X 60°
										175 - 2ND STAGE	11.00 X 60°
G615/15	RLS 130	31	4474	1.40	0.1	7.0	5.30	3.90	3.5 - 4.5	175 - 1ST STAGE	12.00 X 60°
										175 - 2ND STAGE	11.50 X 60°
G615/16	RLS 130	33.5	4835	1.50	0.1	9.0	5.66	4.16	3.5 - 4.5	175 - 1ST STAGE	13.00 X 60°
										175 - 2ND STAGE	12.50 X 60°

NOZZLE SELECTION NOTE:

- NOZZLE MANUFACTURERS:
  2 stages: DELAVAN, HAGO, DANFOSS - modulating: BERGONZO
- NOZZLE SPRAY TYPES - SOLID SPRAY RECOMMENDED
- NOZZLE SIZES & PUMP PRESSURE BASED ON CALCULATED OUTPUT
- RETURN PRESSURES BASED ON BERGONZO A4 NOZZLES CHART

GAS MANIFOLD NOTE:

- MANIFOLD PRESSURE PROVIDED BASED ON CHAMBER PRESSURES SHOWN IN CHART
- BASED ON CO_2 LEVELS OF 9 - 10%
- BASED ON SEA LEVEL
- NATURAL GAS HH_V = 1010 BTU PER FT^3/Hr.
- DATA BASED ON 0.1 INCHES WC BREECH PRESSURE

ALL SETTINGS ARE PRELIMINARY COMMISSIONING SETTINGS.
FURTHER ADJUSTMENTS MAYBE NECESSARY DUE TO SITE INSTALLATION AND COMBUSTION CONDITIONS
BREECH PRESSURE RANGE FROM 0.05 TO 0.2 INCHES WC

GAS BURNER SET-UP GUIDE
BUDERUS SB625 SERIES BOILERS

BOILER MODEL	RIELLO BURNER MODEL	IBR FUEL INPUT ± 5% OIL (US GPH)	IBR FUEL INPUT ± 5% GAS (kBTU/H)	CHAMBER PRESSURE (INCHES W.C.)	BREECH PRESSURE (INCHES W.C.)	COMBUSTION HEAD SETTING AIR ADJ.	COMBUSTION HEAD SETTING GAS ADJ.	MANIFOLD (INCHES W.C.) GROSS	MANIFOLD (INCHES W.C.) NET	PILOT MANIFOLD PRESSURE RANGE (INCHES W.C.)
SB625 160	G750	N/A	563	0.90	0.0	4.0	---	2.28	1.38	---
	G900					1.0	---	3.15	2.25	
	RX 250					---	---	-4.38	-5.28	
SB625 220	RS 28/M RS 28/E		788	1.15	0.0	2.0	3.0	4.92	3.77	3.5 - 4.5
	RX 300					---	---	-3.25	-4.40	
SB625 290	RS 28/M RS 28/E RS 45/M LN RS 45/E LN		1014	1.50	0.0	3.0 R1 = 6 R2 = 6	3.0 R3 = 0	4.65 4.87	3.15 3.37	3.5 - 4.5
	RX 400					---	---	-3.9	-5.4	
SB625 370	RS 38/M RS 38/E RS 45/M LN RS 45/E LN		1314	2.00	0.0	3.0 R1 = 6 R2 = 6	3.0 R3 = 0	5.00 7.30	3 5.3	3.5 - 4.5
	RX 400					---	---	-4.5	-6.5	
SB625 480	RS 50/M RS 50/E RS 45/M LN		1689	2.20	0.0	3.0 R1 = 6 R2 = 6	0.0 R3 = 0	4.3 9.80	2.1 7.6	3.5 - 4.5
	RX 500					---	---	-4.1	-6.3	
SB625 640	RS 70/M RS 70/E		2200	2.50	0.0	A = 4 B = 3	---	5.44	2.94	3.5 - 4.5
	RS 68/M LN RS 68/E LN					R1 = 8 R2 = 3	---	4.30	1.80	

GAS MANIFOLD NOTE:

- MANIFOLD PRESSURE PROVIDED BASED ON CHAMBER PRESSURES SHOWN IN CHART
- BASED ON CO_2 LEVELS OF 9 - 10%
- BASED ON SEA LEVEL
- NATURAL GAS HH_V = 1010 BTU PER FT^3/Hr.
- DATA BASED ON 0.00-0.05 INCHES WC BREECH PRESSURE

ALL SETTINGS ARE PRELIMINARY COMMISSIONING SETTINGS.
FURTHER ADJUSTMENTS MAY BE NECESSARY DUE TO SITE INSTALLATION AND COMBUSTION CONDITIONS
BREECH PRESSURE RANGE FROM 0.00 TO 0.05 INCHES WC

GAS BURNER SET-UP GUIDE
BUDERUS SB745 SERIES BOILERS

BOILER MODEL	RIELLO BURNER MODEL	IBR FUEL INPUT ± 5%		CHAMBER PRESSURE (INCHES W.C.)	BREECH PRESSURE (INCHES W.C.)	COMBUSTION HEAD SETTING		MANIFOLD (INCHES W.C.)		PILOT MANIFOLD PRESSURE RANGE (INCHES W.C.)
		OIL (US GPH)	GAS (kBTU/H)			AIR ADJ.	GAS ADJ.	GROSS	NET	
SB745 800	RS 100/M	N/A	3003	2.9	0.05	A = 1 / B = 3	---	4.95	2.05	3.5 - 4.5
	RS 120/M LN RS 120/E LN					R1 = 3 / R2 = 3	---	6.35	3.45	
SB745 1050	RS 100/M RS 100/E		3754	3.00	0.15	A = 4 / B = 4	---	5.82	2.82	3.5 - 4.5
	RS 120/M LN RS 120/E LN					R1 = 2 / R2 = 5	---	7.07	4.07	
SB745 1300	RS 130/M RS 130/E		4692	3.10	0.20	A = 9 / B = 9	---	6	2.90	3.5 - 4.5
	RS 160/M LN RS 160/E LN					R1 = 0 / R2 = 0	---	6.80	3.70	
SB745 1550	RS 190/M RS 190/E		5443	3.10	0.25	0.0	---	6	2.90	3.5 - 4.5
	RS 160/M LN RS 160/E LN					R1 = 4 / R2 = 0	---	8.20	5.10	

GAS MANIFOLD NOTE:

- MANIFOLD PRESSURE PROVIDED BASED ON CHAMBER PRESSURES SHOWN IN CHART
- BASED ON CO_2 LEVELS OF 9 - 10%
- BASED ON SEA LEVEL
- NATURAL GAS HH_V = 1010 BTU PER FT^3/Hr.
- DATA BASED ON 0.05-0.25 INCHES WC BREECH PRESSURE

ALL SETTINGS ARE PRELIMINARY COMMISSIONING SETTINGS.
FURTHER ADJUSTMENTS MAY BE NECESSARY DUE TO SITE INSTALLATION AND COMBUSTION CONDITIONS
BREECH PRESSURE RANGE FROM 0.05 TO 0.25 INCHES WC

DUAL FUEL BURNER SET-UP GUIDE
BUDERUS SB625 SERIES BOILERS

BOILER MODEL	RIELLO BURNER MODEL	IBR FUEL INPUT ± 5%		CHAMBER PRESSURE (INCHES W.C.)	BREECH PRESSURE (INCHES W.C.)	COMB. HEAD SETTING	MANIFOLD (INCHES W.C.)		PILOT MANIFOLD PRESSURE RANGE (INCHES W.C.)	RETURN PSIG		OIL BURNER NOZZLE (PSIG ± 5%)	
		OIL (US GPH)	GAS (kBTU/H)				GROSS	NET		MIN	MAX	PUMP PRESSURE	NOZZLE
SB625 220	RLS 28	5.6	788	1.15	0.0	1.0	4.66	3.51	---	N/A		215 - 1ST STAGE	2.00 X 45° W
												215 - 2ND STAGE	2.00 X 60° W
SB625 290	RLS 28	7.2	1014	1.50	0.0	2.0	5.65	4.15	---			200 - 1ST STAGE	2.75 X 45° B
												200 - 2ND STAGE	2.75 X 60° B
SB625 370	RLS 38	9.4	1314	2.00	0.0	0.0	6.32	4.32	---			200 - 1ST STAGE	3.50 X 45° B
												200 - 2ND STAGE	3.50 X 60° B
SB625 480	RLS 50	12.1	1689	2.20	0.0	3.0	7.38	5.18	---			200 - 1ST STAGE	4.50 X 60° B
												200 - 2ND STAGE	4.50 X 60° B
SB625 640	RLS 70	15.7	2200	2.50	0.0	0.0	5.70	3.20	3.5 - 4.5			200 - 1ST STAGE	6.00 X 60° B
												200 - 2ND STAGE	6.00 X 60° B
	RLS 68/E LN					6.0	5.19	2.69	3.5 - 4.5	70	180	280	Bergonzo 80kg/h 45° A4

GAS MANIFOLD NOTE:

- MANIFOLD PRESSURE PROVIDED BASED ON CHAMBER PRESSURES SHOWN IN CHART
- BASED ON CO_2 LEVELS OF 9 - 10%
- BASED ON SEA LEVEL
- NATURAL GAS HH_V = 1010 BTU PER FT^3/Hr.
- DATA BASED ON 0.00-0.05 INCHES WC BREECH PRESSURE

ALL SETTINGS ARE PRELIMINARY COMMISSIONING SETTINGS.
FURTHER ADJUSTMENTS MAYBE NECESSARY DUE TO SITE INSTALLATION AND COMBUSTION CONDITIONS
BREECH PRESSURE RANGE FROM 0.00 TO 0.05 INCHES WC

DUAL FUEL BURNER SET-UP GUIDE
BUDERUS SB745 SERIES BOILERS

BOILER MODEL	RIELLO BURNER MODEL	IBR FUEL INPUT ± 5%		CHAMBER PRESSURE (INCHES W.C.)	BREECH PRESSURE (INCHES W.C.)	COMB. HEAD SETTING	MANIFOLD (INCHES W.C.)		PILOT MANIFOLD PRESSURE RANGE (INCHES W.C.)	RETURN PSIG		OIL BURNER NOZZLE (PSIG ± 5%)	
		OIL (US GPH)	GAS (kBTU/H)				GROSS	NET		MIN	MAX	PUMP PRESSURE	NOZZLE
SB745 800	RLS 100	21.5	3003	2.90	0.05	0.0	7.3	4.40	3.5 - 4.5	N/A		175 - 1ST STAGE	8.50 X 60° B
												175 - 2ND STAGE	8.50 X 60° B
	RLS 120/E LN					7.0	6.7	3.80	3.5 - 4.5	65	250	300	Bergonzo 80kg/h 45° A4
SB745 1050	RLS 100	26.8	3754	3.00	0.15	4.0	7.38	4.38	3.5 - 4.5	N/A		200 - 1ST STAGE	10.00 X 60° B
												200 - 2ND STAGE	10.00 X 60° B
	RLS 120/E LN					5.0	6.9	3.90	3.5 - 4.5	120	240	310	Bergonzo 100kg/h 45° A4
SB745 1300	RLS 130	33.5	4692	3.10	0.20	7.0	6.9	3.80	3.5 - 4.5	N/A		220 - 1ST STAGE	12.00 X 60° B
												220 - 2ND STAGE	12.00 X 60° B
	RLS 160/E LN					1.0	6.25	3.15	3.5 - 4.5	95	240	330	Bergonzo 120kg/h 45° A4
SB745 1550	RLS 190/E	38.9	5443	3.10	0.25	0.0	9.7	6.60	3.5 - 4.5	120	245	320	Bergonzo 130kg/h 45° A4
	RLS 160/E LN					0.0	8.09	4.99	3.5 - 4.5	120	245	320	Bergonzo 130kg/h 45° A4

GAS MANIFOLD NOTE:

- MANIFOLD PRESSURE PROVIDED BASED ON CHAMBER PRESSURES SHOWN IN CHART
- BASED ON CO_2 LEVELS OF 9 - 10%
- BASED ON SEA LEVEL
- NATURAL GAS HH_V = 1010 BTU PER FT^3/Hr.
- DATA BASED ON 0.05-0.25 INCHES WC BREECH PRESSURE

ALL SETTINGS ARE PRELIMINARY COMMISSIONING SETTINGS.
FURTHER ADJUSTMENTS MAYBE NECESSARY DUE TO SITE INSTALLATION AND COMBUSTION CONDITIONS
BREECH PRESSURE RANGE FROM 0.05 TO 0.25 INCHES WC

RIELLO

RIELLO S.p.A.
I-37045 Legnago (VR)
Tel.: +39.0442.630111
www.riello.it

RIELLO

35 Pond Park Road
Hingham, Massachusetts,
U.S.A. 02043

RIELLO BURNERS NORTH AMERICA
1-800-4-RIELLO
1-800-474-3556

www.riello.ca
www.riellousa.com

2165 Meadowpine Blvd
Mississauga, Ontario
Canada L5N 6H6

Subject to modifications

ACCESSORIES AND OPTIONS

PARTS BREAKDOWN FOR RL BURNERS

Energy
For
Life

RIELLO

www.riello.ca
www.riellousa.com

Code	Description	Page #
C7000307	Bar Approval Control Kit	Page # 1
C7000310	Bar Approval Control Kit	Page # 1
C7000311	Bar Approval Control Kit	Page # 1
C7000319	PID Modulating Controller	Page # 1
C7000327	Dry Contacts	Page # 1
C7000335	Alarm Horn / Silencing Switch	Page # 2
C7000336	Local/Remote Switch	Page # 2
C7000389	Post Purge Time Delay RS28-50/M	Page # 2
C7000390	Air Pressure Switch	Page # 2
C7000395	Wiring Modifications	Page # 3
C7000396	Additional Indicating Light	Page # 3
C7000500	RC03 Signal Converter	Page # 3

RIELLO BURNERS NORTH AMERICA

Parts List
C7000307 COMPLETE B.A.R. KIT RL 28, 38 & 50/M

Level Part ID
0 C7000307 COMPLETE B.A.R. KIT RL 28, 38 & 50/M
1 3010307 B.A.R. KIT RL 28, 38 & 50/M
1 C5851050 WEBSTER LOCK PRESSURE REGULATOR RV21
1 C5706250 NPT SHUT OFF VALVE ¼ x ¼ 601-¼ FF MINI
1 C5223010 BOTTOM MOUNT PRESSURE GAUGE WJ7658P
1 C5702070 ELBOW ¼" x ¼" x 90° NPT MALE x MALE 99-B

Parts List
C7000310 COMPLETE B.A.R. KIT RL 70, 100 & 130/M

Level Part ID
0 C7000310 COMPLETE B.A.R. KIT RL 70, 100 & 130/M
1 3010310 B.A.R. KIT RL 70, 100 & 130/M
1 C5851050 WEBSTER LOCK PRESSURE REGULATOR RV21
1 C5706250 NPT SHUT OFF VALVE ¼ x ¼ 601-¼ FF MINI
1 C5223010 BOTTOM MOUNT PRESSURE GAUGE WJ7658P
1 C5702070 ELBOW ¼" x ¼" x 90° NPT MALE x MALE 99-B

Parts List
C7000311 COMPLETE B.A.R. KIT RL 190/M

Level Part ID
0 C7000311 COMPLETE B.A.R. KIT RL 190/M
1 3010311 B.A.R. KIT RL 190/M
1 C5851050 WEBSTER LOCK PRESSURE REGULATOR RV21
1 C5706250 NPT SHUT OFF VALVE ¼ x ¼ 601-¼ FF MINI
1 C5223010 BOTTOM MOUNT PRESSURE GAUGE WJ7658P
1 C5702070 ELBOW ¼" x ¼" x 90° NPT MALE x MALE 99-B

Parts List
C7000319 PID MOD CONTROL RWF40.001A97 – INSTALLED

Level Part ID
0 C7000319 PID MOD CONTROL RWF40.001A97 - INSTALLED
1 C5360086 PID MODULATING CONTROL RWF40.001A97

Parts List
C7000327 DRY CONTACT RELAY R-SERIES 4 POLE INSTLD

Level Part ID
0 C7000327 DRY CONTACT RELAY R-SERIES 4 POLE INSTLD
1 C5360061 RELAY 55.34.8.110.0040 10A 110v 4 POLE
1 C5360060 SUB BASE 94.745MA FOR 4 POLE RELAY
1 C5251001 WIRE BLACK TEW18/16BK/B
1 C5311121 DIN RAIL
1 C5314005 STANDOFF ALUMINUM #2212 FOR C7000336

RIELLO BURNERS NORTH AMERICA

Parts List
C7000335 ALARM HORN W/ SILENCING SWITCH INSTALLED

Level Part ID
0 C7000335 ALARM HORN W/ SILENCING SWITCH INSTALLED
1 C5251001 WIRE BLACK TEW18/16BK/B
1 C5332017 PUSH BUTTON SWITCH ZB4BA2
1 C5332018 CONTACT BLOCK ZB4BZ101
1 C5360061 RELAY 55.34.8.110.0040 10A 110v 4 POLE
1 C5360060 SUB BASE 94.745MA FOR 4 POLE RELAY
1 C5400498 ALARM HORN - MALLORY SONALERT 283 SC110
1 C5400478 'ALARM SILENCE' LAMACOID LABEL .5x1.5
1 C5400472 "ALARM" LAMACOID LABEL .5x1.5

Parts List
C7000336 LOCAL/REMOTE SWITCH R-SERIES INSTALLED

Level Part ID
0 C7000336 LOCAL/REMOTE SWITCH R-SERIES INSTALLED
1 C5360070 2 POSITION SWITCH BACC21KA03
1 C5360071 CONTACT BLOCK N/O BAC33E10
1 C5251001 WIRE BLACK TEW18/16BK/B
1 C5251200 WIRE WHITE TEW18/16WH/8
1 C5360061 RELAY 55.34.8.110.0040 10A 110v 4 POLE
1 C5360060 SUB BASE 94.745MA FOR 4 POLE RELAY
1 C5400466 'LOCAL/REMOTE' LAMACOID LABEL .5x1.5
1 C5311121 DIN RAIL
1 2261925 PLATE NUT - FOR CONTROL BOX SUB BASE
1 SCREW - 6/32 x ½
1 SCREW - 6/32 LOCK NUTS
1 C5314005 STANDOFF ALUMINUM #2212 FOR C7000336
1 C5360077 CONTACT BLOCK N/C BAC33E01

Parts List
C7000389 KIT DELAY OFF PURGE RELAY RS28-50M

Level Part ID
0 C7000389 KIT DELAY OFF PURGE RELAY RS28-50M
1 C5830015 POST PURGE RELAY DMB71 - DUAL
1 C5314005 STANDOFF ALUMINUM #2212 FOR C7000336
1 C5311121 DIN RAIL
1 C5251001 WIRE BLACK TEW18/16BK/B
1 C5850643 SOLENOID AIR VALVE ASCO SC8356A2V NC 1/8
1 C5008010 HOSE BARB 3/16" x 1/8" MNPT 125HB-3-2
1 C7050016 SILICONE HOSE - CLEAR OD-11/32 - ID-5/32
1 C7050016 SILICONE HOSE - CLEAR OD-11/32 - ID-5/32
1 C5251900 WIRE GREEN AWG18 18TEW/16ST
1 C5251200 WIRE WHITE TEW18/16WH/8
1 C??????? - DRAWING FOR WIRING

Parts List
C7000390 DIFFERENTIAL SWITCH KIT INSTALLED

Level Part ID
0 C7000390 DIFFERENTIAL SWITCH KIT INSTALLED
1 C5705121 CLEAR PVC TUBE 3/16 ID x 5/16 OD
1 C5008010 HOSE BARB 3/16" x 1/8" MNPT 125HB-3-2
1 C5285010 TIE WRAP 3 7/8" PLT1M-M

RIELLO BURNERS NORTH AMERICA

Parts List
C7000395 WIRE MOD. TO INCL. 3 EXTRA TERMINALS

Level Part ID
0 C7000395 WIRE MOD. TO INCL. 3 EXTRA TERMINALS
1 C5400510 M10 ADDITIONAL 3 TERMINALS INSTALLED
2 C5311108 TERMINAL FOR R-SERIES WK4/U 57.504.0055
1 C5251200 WIRE WHITE TEW18/16WH/8
1 C5251001 WIRE BLACK TEW18/16BK/B
1 C5311121 DIN RAIL

Parts List
C7000396 ADDITIONAL INDICATION LIGHTS INSTALLED

Level Part ID
0 C7000396 ADDITIONAL INDICATION LIGHTS INSTALLED
1 C5251200 WIRE WHITE TEW18/16WH/8
1 C5251001 WIRE BLACK TEW18/16BK/B

Parts List
C7000500 RCO3 SIGNAL CONVERTER – INSTALLED

Level Part ID
0 C7000500 RCO3 SIGNAL CONVERTER - INSTALLED
1 C5360118 RC03 SIGNAL CONVERTER FOR R-SERIES
1 C5852920 POTENTIOMETR 1000 OHM 3POLE90° ASZ12.30
1 C5311116 DUAL TERMINAL STRIP WK4EU
1 Terminal Labels
1 C5251001 WIRE BLACK TEW18/16BK/B
1 C5251200 WIRE WHITE TEW18/16WH/8
1 C6XXXXXX - WIRING DIAGRAM

NOTES

RIELLO S.p.A.
I-37045 Legnago (VR)
Tel.: +39.0442.630111
www.riello.it

35 Pond Park Road
Hingham, Massachusetts,
U.S.A. 02043

RIELLO BURNERS NORTH AMERICA
1-800-4-RIELLO
1-800-474-3556

www.riello.ca
www.riellousa.com

2165 Meadowpine Blvd
Mississauga, Ontario
Canada L5N 6H6

Subject to modifications

SIEMENS

Technical Instructions
Document No. 155-714P25
Rev. 1, May, 2002

SQN71...
Reversing Actuators

ISO 9001
REGISTERED FIRM

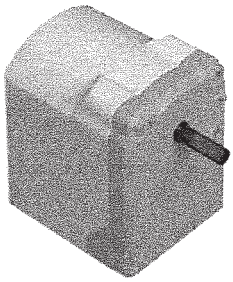

Description

SQN7... Actuators are used to position flow control valves, butterfly valves, dampers or any application requiring rotary motion.

A synchronous motor drives the shaft and switch cam drum.

The switch cam drum actuates two limit end switches and one auxiliary switch.

The position of each limit end and auxiliary switch can be independently adjusted within a maximum range of 160°.

The drive shaft can be disengaged for manual rotation.

Features

- Line voltage floating or proportional control
- Two-stage or three-stage application
- Torques up to 22 lb-in
- Running times 3.5 seconds, 10 seconds or 25 seconds through 90° ∢
- Two limit end switches and one auxiliary switch
- Shaft disengagement clutch
- Optional single- or double-position feedback potentiometer
- UL Recognized and CSA certified
- 230 Vac models conform to CE for export

Product Numbers

Table 1.

Running Time at 60 Hz[1] Through 90° ∢ Seconds	Nominal Torque lb-in	Holding Torque lb-in	Product Numbers	
			120 Vac +10% /–15% 50 to 60 Hz	230 Vac +10%/–15% 50 to 60 Hz
3.5	13	6	SQN71.203R19	SQN71.203R29
10	22	10.5	SQN71.403R19	SQN71.403R29
25	22	11.5	SQN71.603R19	SQN71.603R29

1. At 50 Hz, running times are 20% longer.

Product Number Identification Legend

For actuator identification only. See Table 1 for product numbers.

SQN7 1 . 2 0 3 R 1 9

Actuator family

Direction of rotation

- **0** Counterclockwise
- **1** Clockwise (when facing shaft)

Running time

- **2** 3.5 seconds
- **4** 10 seconds
- **6** 25 seconds

Connection diagram

Total number of switches

R - North American models

Voltage/Frequency

- **1** 120 Vac / 50...60 Hz
- **2** 230 Vac / 50...60 Hz

Shaft number

Accessories

NOTE: Accessories must be ordered separately.

	Product Number
Single potentiometers	
• 1000Ω/90° ∢	ASZ12.30
• 1000Ω/135° ∢	ASZ12.33
Double potentiometers	
• 1000Ω/1000Ω/90° ∢	ASZ22.30
• 1000Ω/1000Ω/135° ∢	ASZ22.33

Installation and Service Notes

- Electrical wiring must be in compliance with national and local standards and regulations.
- Potentiometer wires must have the same insulation class as line voltage wires.

WARNING:

Disconnect the actuator power supply before servicing.

Specifications

Nominal Voltage			
SQN71..R19 models	120 Vac –15%/+10%		
SQN71..A29 models	230 Vac –15%/+10%		
Input Signal			
SQN71..R19 models	120 Vac –15%/+10%		
SQN71..A29 models	230 Vac –15%/+10%		
Frequency	50 to 60 Hz ±6%		
Motor	Synchronous		
Power consumption	6 VA		
Duty cycle	60%, 3-minute max. (continuous)		
Angular adjustment	160° ∢		
Mounting position	Optional		
NEMA rating	NEMA1, 2, 5 and 12 for indoor use		
Cable entry	Flexible conduit 3/8-inch connector with nut, included		
Wiring connections	Screw terminals		
Direction of rotation	Clockwise (when facing shaft)		
Torques and holding torques	See Table 1		
Running times	See Table 1		
Coupling	Pin disengagement of drive shaft and gear train		
Installation	No.10 screws, from the inside (See *Dimensions*.)		
Adjustable limit end switches	Two		
Adjustable with color-coded switch cams	Red	Open	Cam I
	Blue	Closed	Cam II
Adjustable auxiliary switches	One		
Adjustable with color-coded switch cam	Orange	Auxiliary	Cam III
Cam adjustment			
Red and blue cams	1° increments		
Orange cam	Infinite		
Terminal load			
Limit switches	0.5A pilot duty		
Auxiliary switch	1A pilot duty		
Ambient Conditions			
Operating temperature	–5°F to 140°F (–20°C to 60°C)		
Storage and transport temperature	–60°F to 140°F (–51°C to 60°C)		

NOTE: Do not allow condensation, ice formation or water ingress

Weight	1 lb (0.5 kg)
Agency approvals	UL Recognized, CSA certified
CE conformity	According to the Low Voltage Directive and the EMC Directive

Wiring Diagram

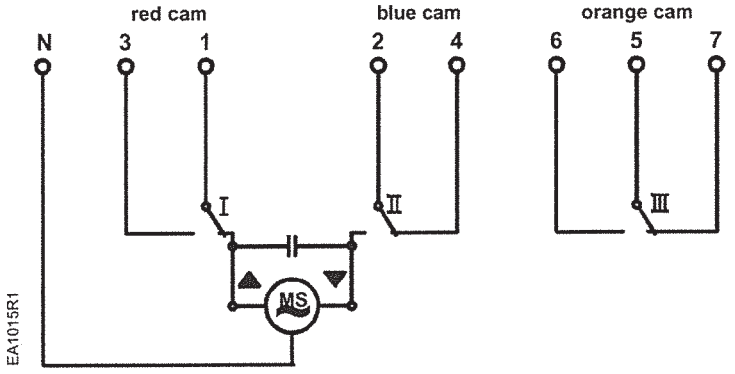

Figure 1. Wiring Diagram.

Dimensions

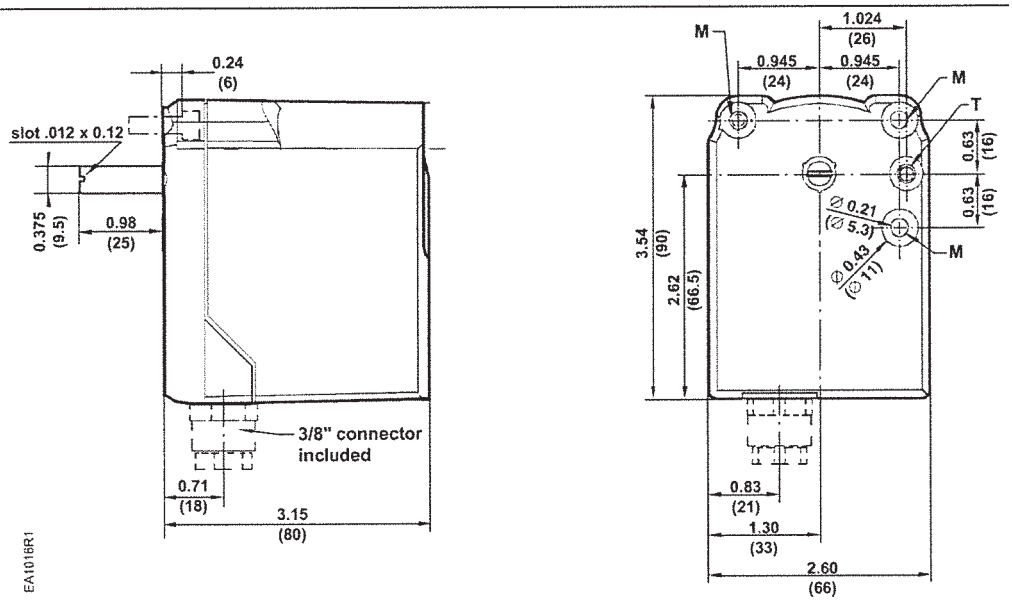

Figure 2. Dimensions in Inches (Millimeters).

Drive shaft shown in fully closed position
M Diameter of through hole: 5.3 mm
T Diameter of knockout hole: 5.3 mm

Information in this publication is based on current specifications. The company reserves the right to make changes in specifications and models as design improvements are introduced. Other product or company names mentioned herein may be the trademarks of their respective owners.
© 2002 Siemens Building Technologies, Inc.

SIEMENS

Technical Instructions
Document No. 155-714P25
Rev. 1, May, 2002

SQN71...
Reversing Actuators

ISO 9001
REGISTERED FIRM

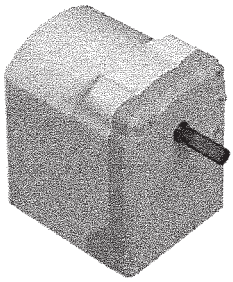

Description

SQN7... Actuators are used to position flow control valves, butterfly valves, dampers or any application requiring rotary motion.

A synchronous motor drives the shaft and switch cam drum.

The switch cam drum actuates two limit end switches and one auxiliary switch.

The position of each limit end and auxiliary switch can be independently adjusted within a maximum range of 160°.

The drive shaft can be disengaged for manual rotation.

Features

- Line voltage floating or proportional control
- Two-stage or three-stage application
- Torques up to 22 lb-in
- Running times 3.5 seconds, 10 seconds or 25 seconds through 90° ∢
- Two limit end switches and one auxiliary switch
- Shaft disengagement clutch
- Optional single- or double-position feedback potentiometer
- UL Recognized and CSA certified
- 230 Vac models conform to CE for export

Product Numbers

Table 1.

Running Time at 60 Hz[1] Through 90° ∢ Seconds	Nominal Torque lb-in	Holding Torque lb-in	Product Numbers	
			120 Vac +10% /–15% 50 to 60 Hz	230 Vac +10%/–15% 50 to 60 Hz
3.5	13	6	SQN71.203R19	SQN71.203R29
10	22	10.5	SQN71.403R19	SQN71.403R29
25	22	11.5	SQN71.603R19	SQN71.603R29

1. At 50 Hz, running times are 20% longer.

Product Number Identification Legend

For actuator identification only. See Table 1 for product numbers.

SQN7 1 . 2 0 3 R 1 9

Actuator family

Direction of rotation

- **0** Counterclockwise
- **1** Clockwise (when facing shaft)

Running time

- **2** 3.5 seconds
- **4** 10 seconds
- **6** 25 seconds

Connection diagram

Total number of switches

R - North American models

Voltage/Frequency

- **1** 120 Vac / 50...60 Hz
- **2** 230 Vac / 50...60 Hz

Shaft number

Accessories

NOTE: Accessories must be ordered separately.

	Product Number
Single potentiometers	
• 1000Ω/90° ∢	ASZ12.30
• 1000Ω/135° ∢	ASZ12.33
Double potentiometers	
• 1000Ω/1000Ω/90° ∢	ASZ22.30
• 1000Ω/1000Ω/135° ∢	ASZ22.33

Installation and Service Notes

- Electrical wiring must be in compliance with national and local standards and regulations.
- Potentiometer wires must have the same insulation class as line voltage wires.

WARNING:

Disconnect the actuator power supply before servicing.

Specifications

Nominal Voltage			
SQN71..R19 models	120 Vac –15%/+10%		
SQN71..A29 models	230 Vac –15%/+10%		
Input Signal			
SQN71..R19 models	120 Vac –15%/+10%		
SQN71..A29 models	230 Vac –15%/+10%		
Frequency	50 to 60 Hz ±6%		
Motor	Synchronous		
Power consumption	6 VA		
Duty cycle	60%, 3-minute max. (continuous)		
Angular adjustment	160° ∢		
Mounting position	Optional		
NEMA rating	NEMA1, 2, 5 and 12 for indoor use		
Cable entry	Flexible conduit 3/8-inch connector with nut, included		
Wiring connections	Screw terminals		
Direction of rotation	Clockwise (when facing shaft)		
Torques and holding torques	See Table 1		
Running times	See Table 1		
Coupling	Pin disengagement of drive shaft and gear train		
Installation	No.10 screws, from the inside (See *Dimensions*.)		
Adjustable limit end switches	Two		
Adjustable with color-coded switch cams	Red	Open	Cam I
	Blue	Closed	Cam II
Adjustable auxiliary switches	One		
Adjustable with color-coded switch cam	Orange	Auxiliary	Cam III
Cam adjustment			
Red and blue cams	1° increments		
Orange cam	Infinite		
Terminal load			
Limit switches	0.5A pilot duty		
Auxiliary switch	1A pilot duty		
Ambient Conditions			
Operating temperature	–5°F to 140°F (–20°C to 60°C)		
Storage and transport temperature	–60°F to 140°F (–51°C to 60°C)		

NOTE: Do not allow condensation, ice formation or water ingress

Weight	1 lb (0.5 kg)
Agency approvals	UL Recognized, CSA certified
CE conformity	According to the Low Voltage Directive and the EMC Directive

Wiring Diagram

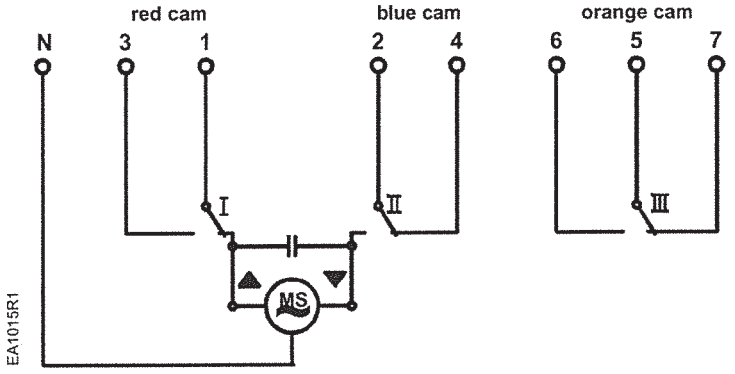

Figure 1. Wiring Diagram.

Dimensions

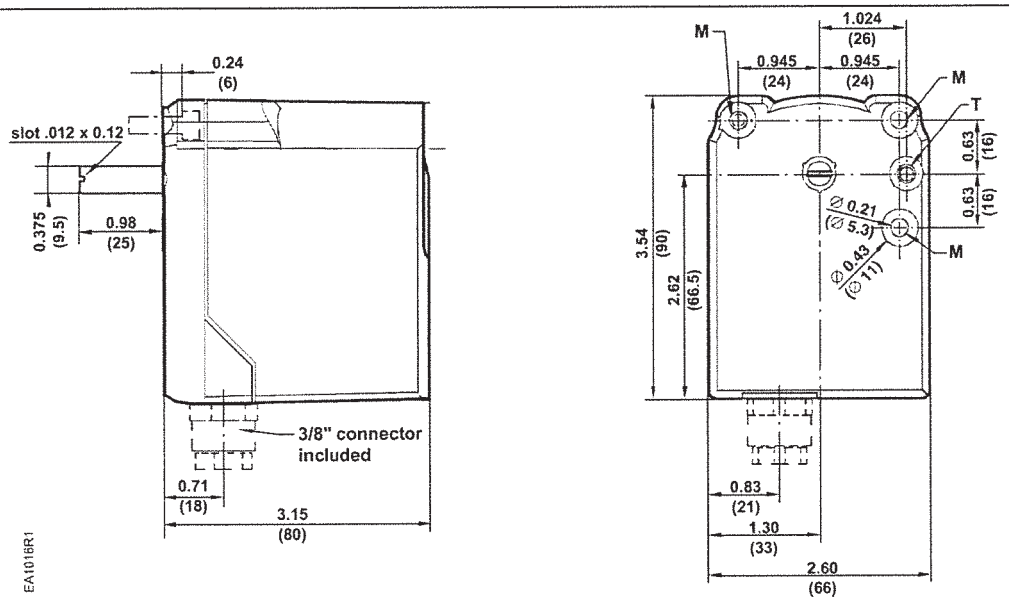

Figure 2. Dimensions in Inches (Millimeters).

Drive shaft shown in fully closed position
M Diameter of through hole: 5.3 mm
T Diameter of knockout hole: 5.3 mm

Information in this publication is based on current specifications. The company reserves the right to make changes in specifications and models as design improvements are introduced. Other product or company names mentioned herein may be the trademarks of their respective owners.
© 2002 Siemens Building Technologies, Inc.

SIEMENS

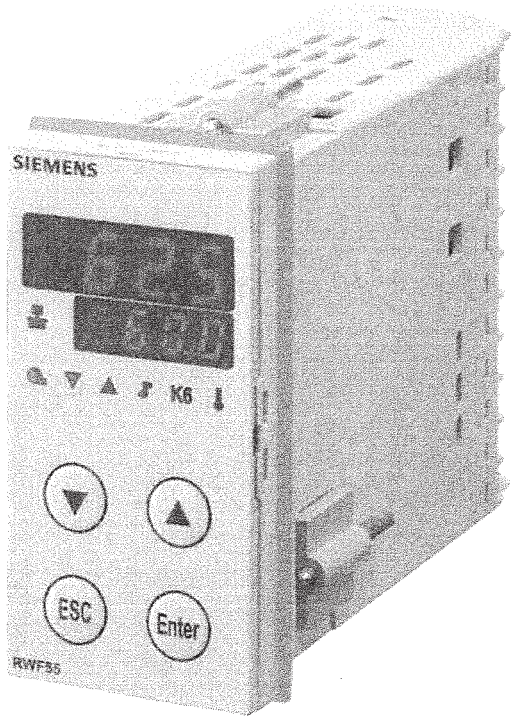

RWF55.5 and RWF55.6

Compact universal controllers

Optimized for temperature and pressure control in connection with modulating or multistage burners and air conditioning systems

User Manual

The RWF55.5/RWF55.6 and this User Manual are intended for use by OEMs which integrate the controllers in their products!

Caution!
All safety, warning and technical notes contained in the Data Sheet on the RWF55 (N7867) also apply to this document!

CC1U7867en
19.07.2016

Building Technologies Division
Infrastructure & Cities Sector

Supplementary documentation

Data Sheet RWF55 ..... N7867
Environmental Declaration RWF55 ..... E7867

Contents

1	Introduction	8
1.1	General notes	8
1.2	Typographical conventions	9
1.2.1	Safety notes	9
1.2.2	Warning symbols	9
1.2.3	Notification symbols	10
1.2.4	Presentation	10
1.3	Description	11
1.4	Block structure	12
2	Identification of product no.	13
2.1	Type field	13
2.2	Scope of delivery	13
3	Installation	14
3.1	Installation site and climatic conditions	14
3.2	Dimensions	14
3.3	Side-by-side mounting	15
3.4	Mounting the controller in a panel cutout	15
3.5	Removing the controller from the panel cutout	16
3.6	Cleaning the front	16
4	Electrical connections	17
4.1	Installation notes	17
4.2	Galvanic separation	18
4.3	Assignment of terminals	19
5	Operating modes	22
5.1	Low-fire operation	22
5.2	High-fire operation	23
5.2.1	Modulating burner, 3-position output	23
5.2.2	Modulating burner, analog output	24
5.2.3	2-stage burner, 3-position output	25
5.2.4	2-stage burner, analog output	26
5.3	Burner shutdown	27
5.4	Predefined setpoint	28
5.4.1	Setpoint changeover SP1 / SP2 or setpoint shift analog via InP2	29
5.4.2	Setpoint changeover SP1 / external setpoint via InP2	30
5.4.3	Setpoint shifting SP1 analog via InP2 / binary via dSP	31
5.4.4	External setpoint, setpoint shifting binary via dSP	32
5.5	Weather-compensated setpoint shifting	33

5.6 Response threshold (q) 34
5.7 Cold start of plant 35
5.8 Thermal shock protection (TSS) 37

6 Operation 38

6.1 Meaning of display and buttons 38
6.2 Basic display 40
6.3 User level 41
6.4 Manual control, modulating burner 42
6.5 Manual control, 2-stage burner 43
6.6 Starting the self-setting function 44
6.7 Display of software version 45

7 Parameterization PArA 46

8 Configuration ConF 49

8.1 Analog input InP1 50
8.2 Analog input InP2 52
8.3 Analog input InP3 53
8.4 Controller Cntr 54
8.5 Thermal shock protection (TSS) rAFC 55
8.6 Alarm function AF 56
8.7 Control outputs OutP 58
8.8 Binary input binF 59
8.9 Display diSP 60
8.10 Interface IntF 61

9 Self-setting function 62

9.1 Self-setting function in high-fire operation 62
9.2 Checking the controller parameters 64

10 PC software ACS411 65

10.1 Safety notes 65
10.2 Setting the correct system parameters 65
10.3 Changing the parameters or the plant's configuration 65
10.4 Place of installation 66
10.5 License and liability regulations 66
IMPORTANT – PLEASE READ CAREFULLY! 66
10.6 Procurement of PC software ACS411 66
10.7 Languages 66
10.8 Operating systems : Operating 66
10.9 Prerequisites for hardware 66
10.10 Installation 67
10.11 Others 67

10.11.1 Use of USB port : Use of 67
10.11.2 Powering the controller via the USB port : Powering the controller via the port 67

11 Modbus interface 68

11.1 User level 68
11.2 Parameter level 69
11.3 Configuration level 70
11.4 Remote operation 70
11.5 Device data 71
11.6 Device state 71

12 Profibus-DP interface 72

12.1 RS-485 Technology transfer 72
12.2 Wiring 77
12.3 Parameter list 77

13 What to do if 78

13.1 Alarm messages: 78
13.2 Others 78

14 Technical data 79

14.1 Inputs 79
14.1.1 Analog input InP1 (actual value) 79
14.1.2 Analog input InP2 (external setpoint, setpoint shifting) 81
14.1.3 Analog input InP3 (outside temperature) 81
14.1.4 Binary input D1 81
14.1.5 Binary input D2 82
14.2 Monitoring the measuring circuit 83
14.3 Controller outputs OutP 84
14.4 Controller 85
14.5 Electrical data 85
14.6 Housing 85
14.7 Environmental conditions 86
14.8 Segment display 86
14.9 Standards and certificates 87

15 Key 88

16 List of figures 90

1 Introduction

1.1 General notes

Please read this User Manual before switching on the controller. Keep the User Manual in a safe place which can be accessed by all users at all times.

Version!
This User Manual describes all necessary settings (applicable to controller software version XXX.01.01).

⇨ Reference!
See chapter 6.7 *Display of software version.*

1.2 Typographical conventions

1.2.1 Safety notes

This User Manual contains information which must be observed to ensure your own personal safety and to prevent damage to equipment and property. The instructions and notes are highlighted by warning triangles, a hand or arrow symbol and are presented as follows, depending on the hazard level:

Qualified personnel

Only **qualified personnel** are allowed to install and operate the equipment. Qualified personnel in the context of the safety-related notes contained in this document are persons who are authorized to commission, ground and tag devices, systems and electrical circuits in compliance with established safety practices and standards.

Correct use

Note the following:

The controller may only be used on the applications described in the technical documentation and only in connection with devices or components from other suppliers that have been approved or recommended by Siemens.

The product can only function correctly and safely if shipped, stored, set up and installed correctly, and operated and maintained as specified.

1.2.2 Warning symbols

The symbols for **Caution** and **Attention** are used in this User Manual under the following conditions:



Caution

This symbol is used where there may be a **danger to personnel** if the instructions are disregarded or not strictly observed!



Attention

This symbol is used where **damage to equipment or data** can occur if the instructions are disregarded or not strictly observed!



Attention

This symbol is used if **precautionary measures must be taken** when handling electrostatically sensitive components.

1.2.3 Notification symbols

	**Note**	This symbol is used to draw your **special attention** to a remark.
⇨	**Reference**	This symbol refers to **additional information** in other documents, chapters or sections.
abc[1]	**Footnote**	Footnotes are **comments, referring to specific parts of the text.** They consist of 2 parts: 1) **Markings** in the text are arranged as continuous superscript numbers 2) **Footnote text** is placed at the bottom of the page and starts with a number and a period
*	**Action**	An asterisk indicates that **a required action** is described. The individual steps are indicated by asterisks, for example: * Press 

1.2.4 Presentation

	**Buttons**	Buttons are shown in a circle. Either symbols or text are possible. If a button has multiple assignments, the text shown is always the text corresponding to the function currently used.
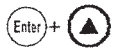	**Button combinations**	Two buttons shown in combination with a plus sign means that they must be pressed simultaneously.
ConF → InP → InP1	**Command chain**	Arrows between words serve for finding parameters at the configuration level more easily or for navigating in the ACS411 setup program.

1.3 Description

Use in heating plants

The RWF55 is used primarily for the control of temperature or pressure in oil- or gas-fired heating plants. Depending on the setting, it is employed as a compact 3-position controller or as a modulating controller with an analog output. An external switch is provided to convert it to a 2-position controller for controlling 2-stage burners. The built-in thermostat function switches the burner on and off.

Cooling controller

The controller's operating mode can be changed from heating to cooling, or vice versa.

⇨ Reference!
See chapter 8.4 *Controller* Cntr.

RWF55

The controllers feature two 4-digit 7-segment displays for the actual value (red) and the setpoint (green).
The RWF55 has a 3-position output consisting of 2 relays to open or close a controlling element.
There is also an analog output and a multifunctional relay (K6), which can be used to set 12 different switching functions.

Interface

The controllers feature an RS-485 interface Modbus slave as standard.

Option

Additionally, the RWF55.6 features a Profibus DP interface.

Control

In modulating mode, the RWF55 operates as a PID controller. In 2-stage mode, the RWF55 provides control based on the set switching threshold.
You have the option of specifying the setpoint of the RWF55 on the controller or externally via an interface.
The user uses it for control the temperature or pressure of a heating boiler or cooling system.
It is possible to adjust the minimum and maximum setpoint limits.
2 binary inputs are used to execute functions such as setpoint changeover, setpoint shifting or operating mode changeover.
Standard feature is a self-setting function used to determine the PID control parameters.

Mounting

The controller insert measures 48 x 96 x 122 mm and is especially suited for installation in control panels. All electrical connections are made via screw terminals at the rear of the unit.

1.4 Block structure

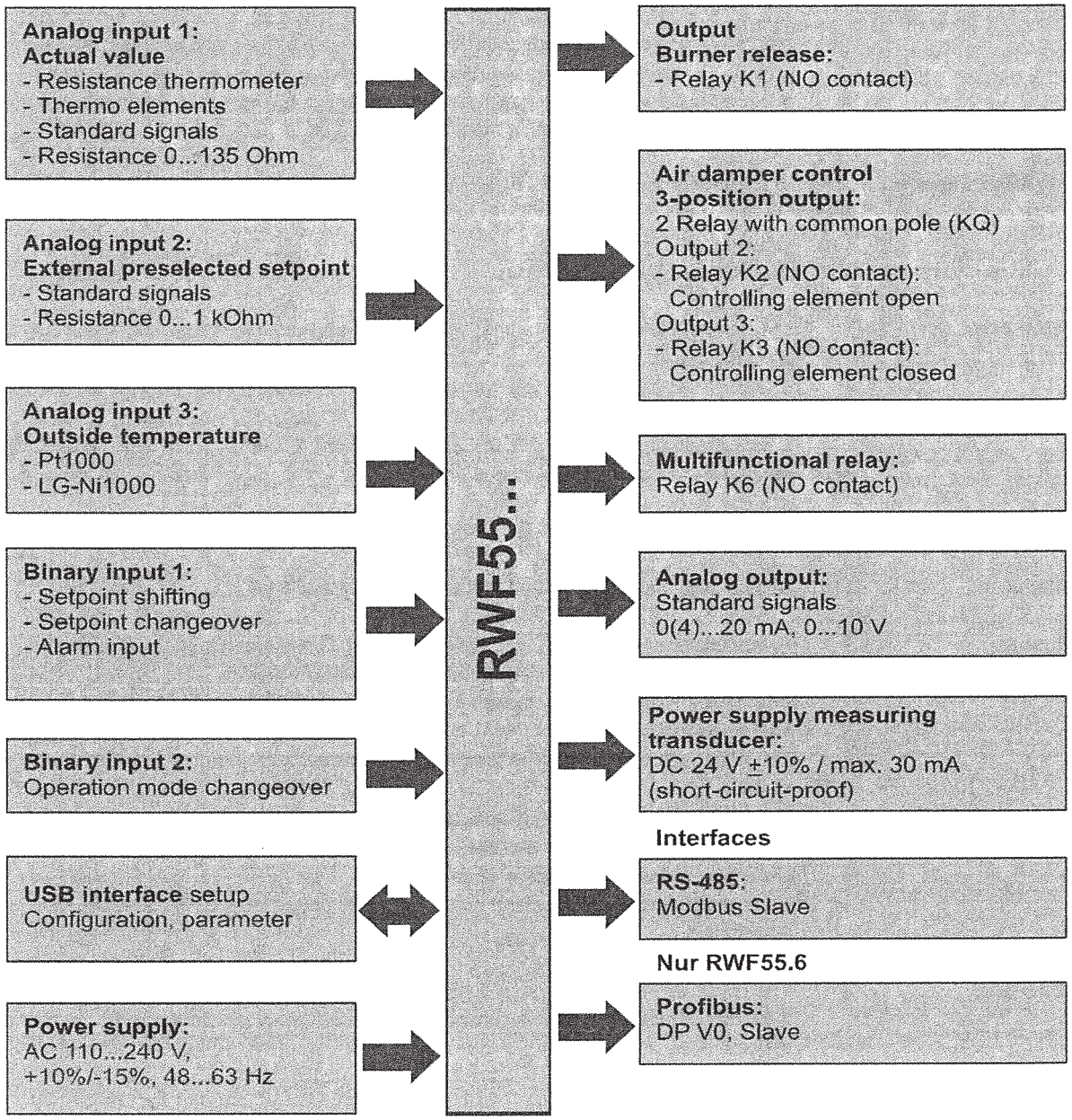

7867d01e/0313

Figure 1: Block structure

2 Identification of product no.

2.1 Type field

Location: The type field is glued onto the housing. The arrow below indicates the product no.

Example

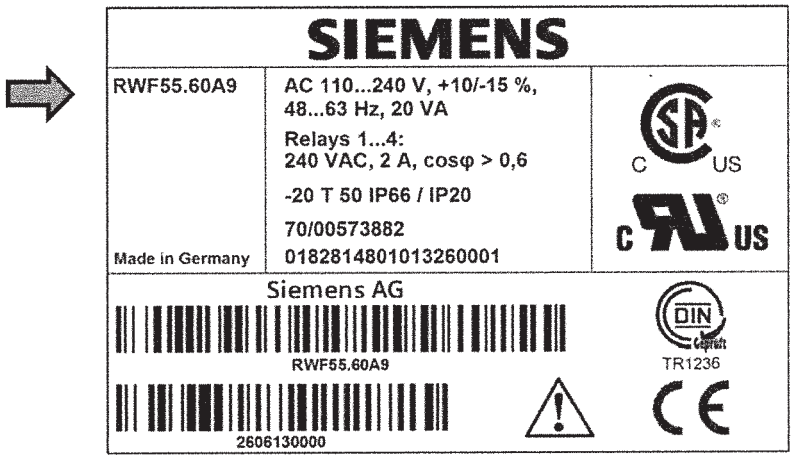

Attention!
Mains supply must correspond to the operating voltage given on the type field.

Product nos.:

Product no.	Description
RWF55.50A9	Full version with 3-position output, analog output, RS-485 – single pack
RWF55.51A9	Full version with 3-position output, analog output, RS-485 – multipack (20 pieces)
RWF55.60A9	Full version with 3-position output, analog output, RS-485 Profibus-DP – single pack
RWF55.61A9	Full version with 3-position output, analog output, RS-485 Profibus-DP – multipack (20 pieces)

2.2 Scope of delivery

- Type of controller as ordered
- User Manual (only single pack)

3 Installation

3.1 Installation site and climatic conditions

- The installation site should be free from vibrations, dust and corrosive media
- The controller should be installed away from sources of electromagnetic fields, such as variable speed drives or high-voltage ignition transformers

Relative humidity: ≤95% (noncondensing)
Ambient temperature: -20...50 °C
Storage temperature: -40...70 °C

3.2 Dimensions

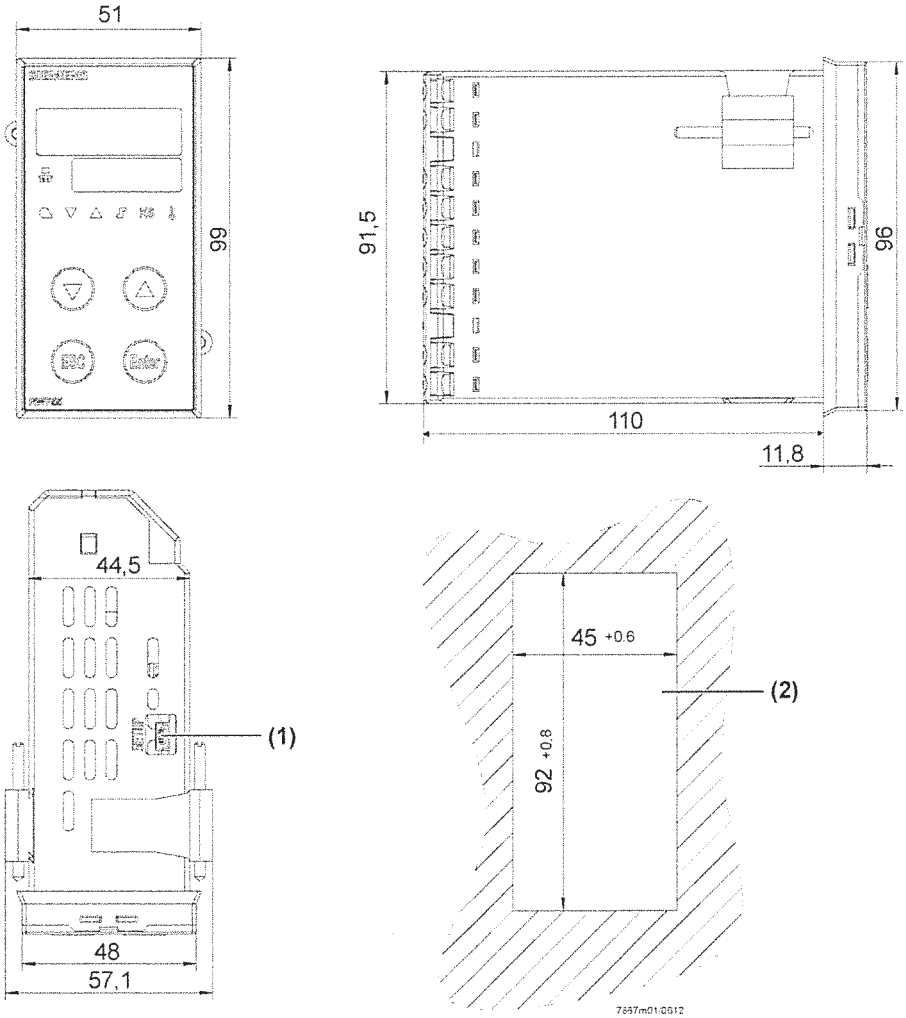

Figure 2: Dimensions of RWF55

Key
(1) USB interface setup
(2) Panel cutout

3.3 Side-by-side mounting

If several controllers are mounted side-by-side or above one another in a control panel, the horizontal distance between panel cutouts must be a minimum of 11 mm and the vertical distance a minimum of 50 mm.

3.4 Mounting the controller in a panel cutout

* Remove the mounting clips

* Fit the seal supplied with the controller

Attention!
The controller must be installed with the seal, preventing water or dirt from entering the housing!

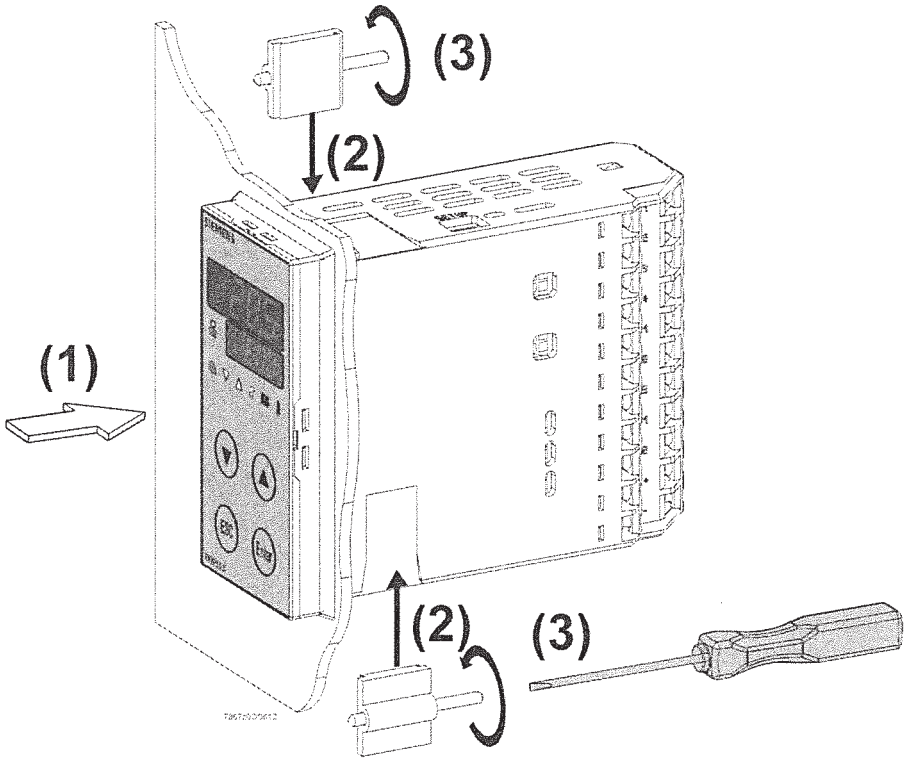

Figure 3: Mounting in a panel cutout

* Insert the controller from the front into the panel cutout (1) and make certain the seal is correctly fitted
* Working from the rear side of the panel, push the mounting clips into the guide slots on the side of the controller (2) and tighten them evenly using a screwdriver (3) until the controller housing is seated firmly in the panel cutout.

3.5 Removing the controller from the panel cutout

Attention!
When removing the controller, make certain that all cables are disconnected and that they do not get squeezed between control panel and housing.

3.6 Cleaning the front

The front of the controller can be cleaned with normal washing/rinsing agents or detergents.

Attention!
The front of the controller is **not** resistant to corrosive acids, caustic solutions and abrasive cleaners. Do not clean with high-pressure cleaners!

4 Electrical connections

4.1 Installation notes

Safety regulations

- The choice of cable, installation and electrical connections of the controller must conform to VDE 0100 *Regulations for the installation of power circuits with nominal voltages below AC 1000 V*, or the relevant local regulations
- The electrical connections must be made by qualified personnel
- If contact with live parts is possible while working on the unit, the controller must be disconnected from power supply (all-polar disconnection)
- When connecting the RWF55 to an external PELV circuit, the existing internal SELV circuit becomes a PELV circuit.
  The protection against electric shock hazard through double or reinforced insulation and voltage limitation is still present.
  No connection to protective earth is required.
- Equipment connected to the SELV circuit must have a safe separation from dangerous contact voltages in accordance with DIN EN 61140 (e.g. through double or reinforced insulation in accordance with DIN EN 60730-1).

Connection of external components



Caution!
When connecting external components to the safety extra low-voltage inputs or outputs of the RWF55 (terminals 11, 12, 13, 14, 21, 22, 23, 31, 32, D1, D2, DG, G+, G-, A+, A- and USB port, RS-485- and Profibus interface), it must be made certain that no dangerous active voltage are introduced to the RWF55.
This can be achieved by using capsulated components with double/reinforced insulation or SELV components, for example. If not observed, there is a risk of electric shock.

Screw terminals



Caution!
All screw terminals at the rear of the unit must always be properly tightened. This applies to unused terminals as well.

Fusing



Caution!
- Fusing on site must not exceed 20 A
- The fuse on the controller side (AC 250 V/1.6 A slow) conforms to IEC 60127-4
- To prevent the relay contacts from welding in the event of short-circuit in the load circuit, fusing of the output relays must give consideration to the maximum permissible relay current
  ⇨ Reference!
  See chapter 14.3 *Controller outputs* `OutP`.
- No other loads may be connected to the controller's main power supply terminals

Suppression of interference

- The electromagnetic compatibility and interference suppression levels conform to the standards and regulations listed under *Technical data*
  ⇨ Reference!
  See chapter 14.5 *Electrical data*.
- Input, output and supply cables should be routed separately, not parallel to one another
- All input and output lines without connection to the power supply network must be shielded and twisted. They must not be run close to live components or live cables.

Incorrect use

- The controller is not suited for installation in areas with explosion hazard
- Incorrect settings on the controller (setpoint, data of parameter and configuration levels) can affect proper functioning of the process or lead to damage.
  Safety devices independent of the controller, such as overpressure relief valves or temperature limiters/monitors should therefore always be provided, and only be capable of adjustment by qualified personnel. Please observe the relevant safety regulations. Since self-setting cannot be expected to handle all possible control loops, the stability of the resulting actual value should be checked

4.2 Galvanic separation

The illustration shows the maximum test voltages between the electrical circuits.

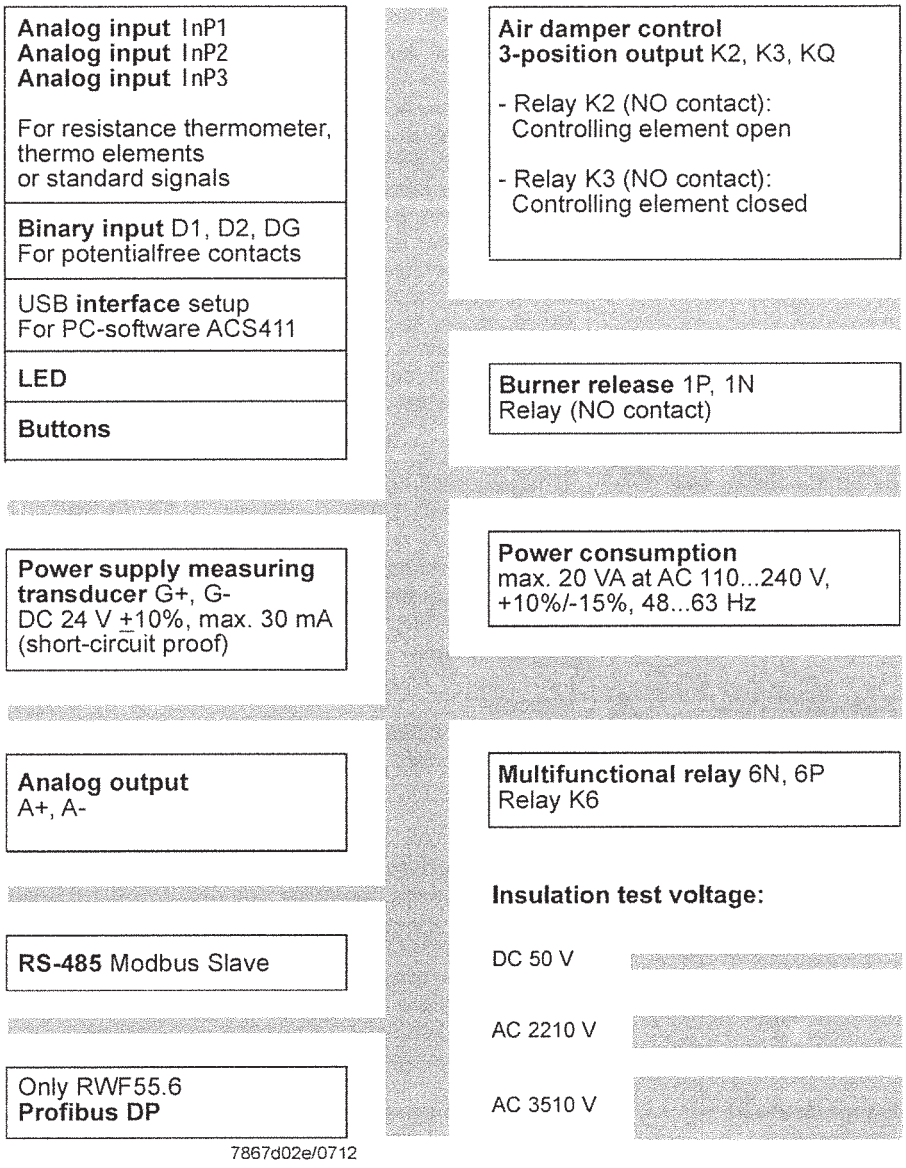

7867d02e/0712

Figure 4: Test voltages

4.3 Assignment of terminals

Caution!
Electrical connections must always be made by qualified personnel!

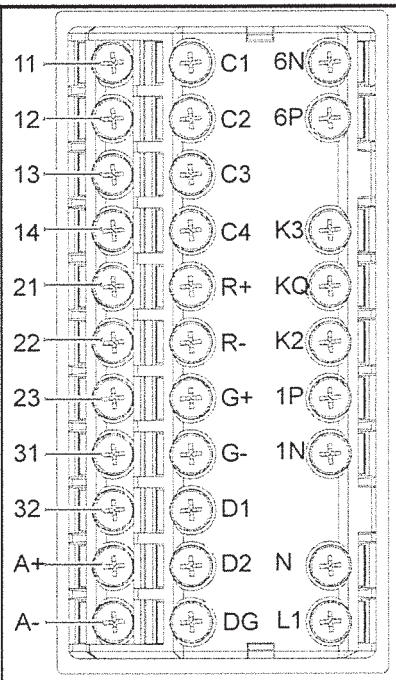

7867z01/0712

Figure 5: Assignment of terminals

Outputs	Display LED	Terminal no.	Connection diagram
Relay *Burner release*: Relay K1: 1P, 1N		1P pole 1N NO contact	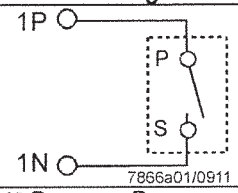 7866a01/0911
3-position output: Relay K3: Controlling element CLOSE Relay K2: Controlling element OPEN	 	K3 NO contact KQ common pole K2 NO contact	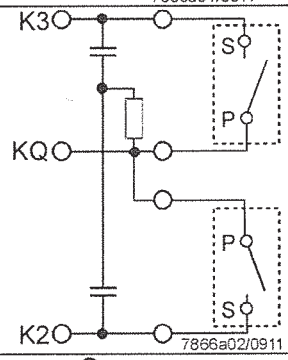 7866a02/0911
Multifunctional relay K6: 6N, 6P	K6	6N NO contact 6P pole	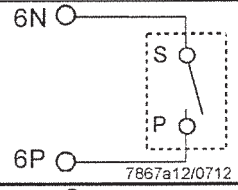 7867a12/0712
Analog output A+, A- DC 0(4)...20 mA, DC 0...10 V		A+ A-	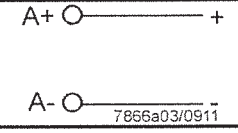 7866a03/0911

Analog input InP1 (actual value)	**Terminal no.**	**Connection diagram**
Thermal element	12 14	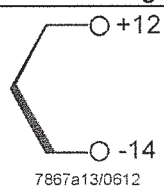
Resistance thermometer in 3-wire circuit	11 12 14	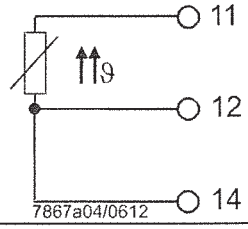
Resistance thermometer in 2-wire circuit 0...135 Ω	11 14	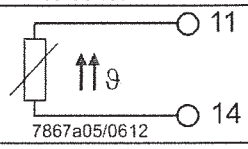
Current input DC 0...20 mA, 4...20 mA	12 + 14 -	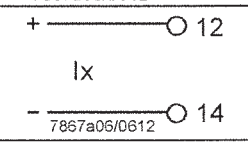
Voltage input DC 0...5 V, DC 1...5 V, DC 0...10 V	13 + 14 -	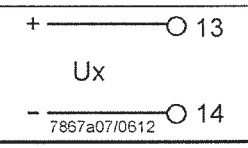

Analog input InP2 (external setpoint or setpoint shifting)	**Terminal no.**	**Connection diagram**
Resistance thermometer in 2-wire circuit 0...1000 Ω	21 23	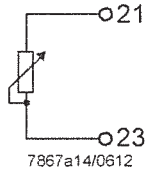
Current input DC 0...20 mA, 4...20 mA	21 + 23 -	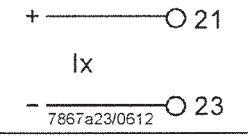
Voltage input DC 0...5 V, 1...5 V, 0...10 V	22 + 23 -	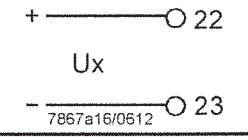

Analog input InP3 (outside temperature)	**Terminal no.**	**Connection diagram**
Resistance thermometer in 2-wire circuit	31 32	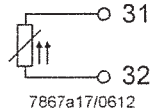

Binary inputs binF	**Terminal no.**	**Connection diagram**
Binary input D1	D1	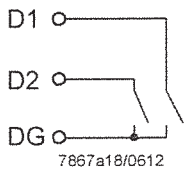
Binary input D2	D2	
Common ground DG	DG	

Power supply	**Terminal no.**	**Connection diagram**
Power supply AC 110...240 V +10%/-15%, 48...63 Hz	L1 Live conductor N Neutral conductor	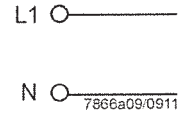
Power supply measuring transducer (short-circuit-proof)	G+ G-	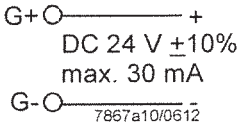

Interface	**Terminal no.**	**Connection diagram**
RS-485	R+ R-	RxD/TxD + RXD/TxD -
Only RWF55.6 Profibus DP	C1 C2 C3 C4	VP (+5 V) RxD/TxD-P (B) RxD/TxD-N (A) DGND

5 Operating modes

5.1 Low-fire operation

Low-fire operation means that only small amounts of heat are drawn from the boiler. Using relay K1 *Burner release*, the 2-position controller ensures control to the setpoint by switching the burner on and off like a thermostat.

Thermostat function

This mode of control is known as the **thermostat function**. An adjustable switching difference ensures that the burner's switching frequency can be selected, aimed at reducing wear.

Heating controller

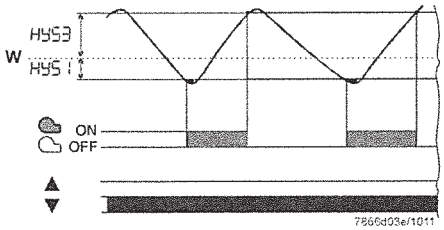

Modulating and 2-stage operation:
Actual value lies between switch-on threshold **HYS1** and switch-off threshold **HYS3**.

Figure 6: Control sequence of heating controller

Cooling controller

If the controller is set to cooling mode, temperature limits **HYS4** and **HYS6** apply. In that case, relay K1 *Burner release* is used for controlling the cooling equipment.

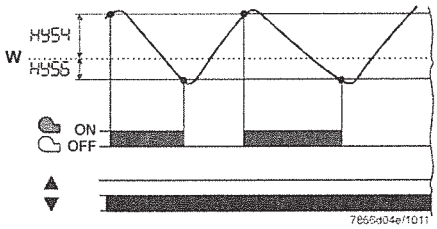

Modulating and 2-stage operation:
Actual value lies between switch-on threshold **HYS4** and switch-off threshold **HYS6**.

Figure 7: Control sequence of cooling controller

5.2 High-fire operation

High-fire operation means that large amounts of heat are drawn from the boiler so that the burner runs continuously. If the heating load during low-fire operation rises to a level where the actual value begins to fall below switch-on threshold **HYS1** , the controller will not immediately switch to a higher burner output, but first makes a dynamic test of the control deviation and switches to the higher output only when an adjustable threshold (q) is exceeded (**A**).

⇨ Reference!
See chapter 5.6 *Response threshold (q)*.

Operating mode changeover

- In high-fire operation – depending on the application – the burner can be fired in **modulating** or **2-stage** operation, then burning larger amounts of fuel than in low-fire operation. **Binary input D2** can be used to switch between modulating and 2-stage operation
  - Contacts **D2** and **DG** open: Modulating burner operation
  - Contacts **D2** and **DG** closed: 2-stage burner operation

⇨ Reference!
See chapter 8.8 *Binary functions* `binF`.

5.2.1 Modulating burner, 3-position output

Area (1)

In area (1), the thermostat function is active. The lowest burner stage is switched on below switch-on threshold **HYS1** and switched off above switch-off threshold **HYS3**.

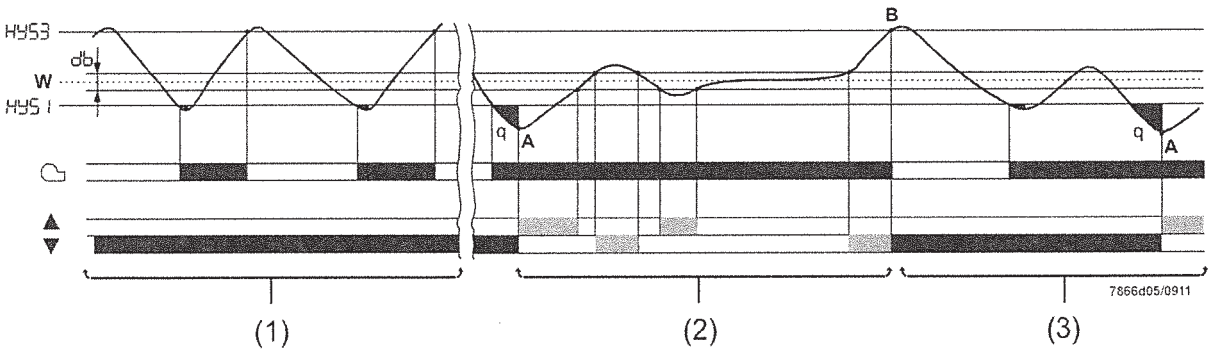

Figure 8: Control sequence of modulating burner, 3-position output

Area (2)

Here, operating mode *Modulating burner* is shown. In high-fire operation, the 3-position controller acts on an actuator via relay K2 (OPEN) and relay K3 (CLOSE). When the actual value falls below the setpoint, the response threshold (q) at point (A) is reached and the controlling element opens (greater heat output). When the actual value lies within the dead band **db**, the controlling element remains inactive. When the actual value exceeds **db**, the controlling element closes (smaller heat output).

Area (3)

If the actual value exceeds the upper switch-off threshold **HYS3** in spite of the lowest heating stage, the controller switches the burner off (B). The controller only starts low-fire operation when the actual value falls below switch-on threshold **HYS1** again. If the response threshold (q) is exceeded, the controller switches to high-fire operation (**A**).

⇨ Reference!
See chapter 5.6 *Response threshold (q)*.

5.2.2 Modulating burner, analog output

Area (1) Thermostat function active.

Area (2) The RWF55 as a modulating controller provides control to the adjusted setpoint. Angular positioning is ensured via the analog output in the form of a standard signal.

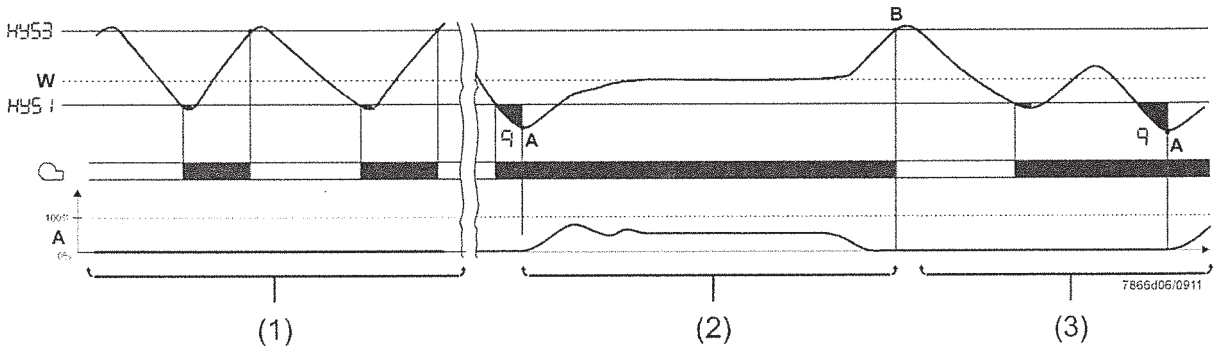

Figure 9: Control sequence of modulating burner, analog output

Area (3) The controller behaves as described in chapter 5.2.1 *Modulating burner, 3-position output*.

Cooling controller If the controller is set to cooling mode, the respective values **HYS4** and **HYS6** apply.

Starting from a high actual value, the controller now controls the connected cooling equipment in low-fire operation. In high-fire operation, the cooling output is controlled via relays K2 and K3 or the analog output. The response threshold (q) calculates automatically (now in the reverse sense) the point from which the cooling output is to be increased.

Output Angular positioning is ensured via the analog output in the form of a standard signal.

Note!
The modulating controller must be configured.

⇨ Reference!
See chapter 8.4 *Controller Cntr*

5.2.3 2-stage burner, 3-position output

In area (1), the thermostat function is active. In area (2), the RWF55 as a **2-position controller** acts on the second stage via relay K2 (OPEN) and relay K3 (CLOSE) by switching on at switch-on threshold **HYS1** and switching off at switch-off threshold **HYS2**.

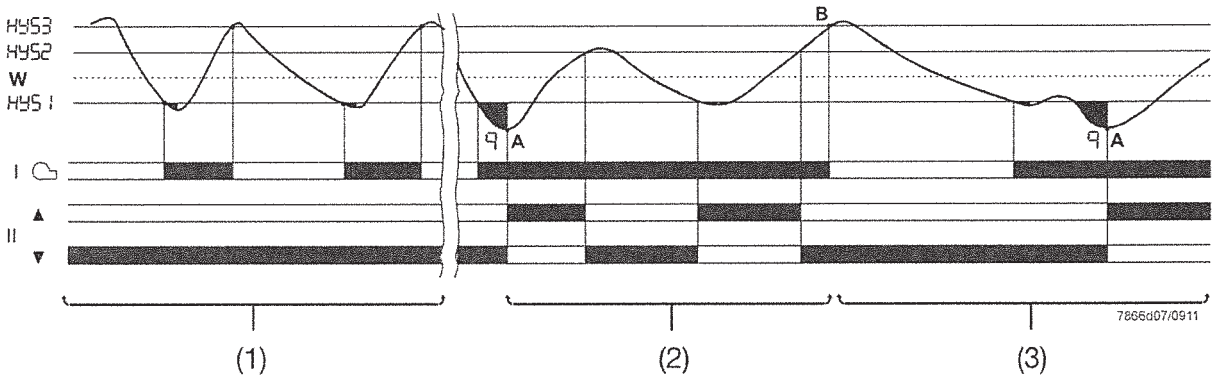

Figure 10: Control sequence of 2-stage burner, 3-position output

In area (3), the actual value exceeds the upper switch-off threshold **HYS3** and the controller shuts down the burner (**B**). The controller only starts low-fire operation when the actual value falls again below switch-on threshold **HYS1**. If the response threshold (q) is exceeded, the controller switches to high-fire operation (**A**).

⇨ Reference!
See chapter 5.6 *Response threshold (q)*.

5.2.4 2-stage burner, analog output

In this case, a digital standard signal switches the second stage on via the analog output (terminals **A+** and **A-**) when reaching switch-on threshold **HYS1** and off at the lower switch-off threshold **HYS2**.

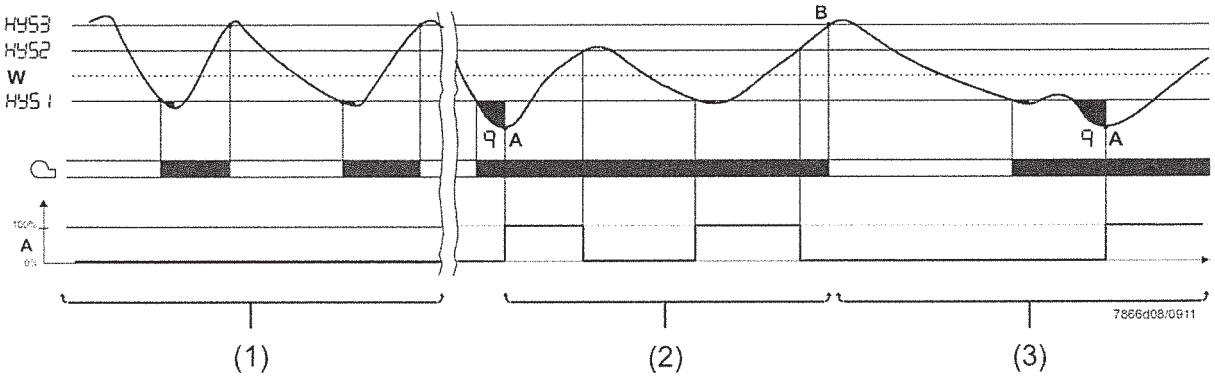

Figure 11: Control sequence of 2-stage burner, analog output

Cooling controller

If the controller is set to cooling mode, the respective values of HYS4, HYS5 and HYS6 apply.

Starting from a high actual value, the controller now controls the connected cooling equipment in low-fire operation. In high-fire operation, the second stage and thus the cooling output are controlled via relays K2 and K3 or the analog output. The response threshold (q) calculates automatically (now in the reverse sense) the point from which the cooling output is to be increased.

5.3 Burner shutdown

In the event of a sensor failure, the controller cannot monitor the actual value of the boiler temperature (analog input InP1). Burner shutdown will automatically be triggered to guard against overheating.
The same applies to acquiring the external setpoint using analog input InP2.

Functions

- Burner off
- 3-position output for closing the controlling element
- Self-setting function is ended
- Manual control is ended

5.4 Predefined setpoint

The setpoints (SP1, SP2 or dSP) are predefined within the selected setpoint limits via the buttons or the ACS411 software.
It is possible to shift the setpoint using either an analog or a binary signal, to change it via an external contact, or to influence it using a weather-compensated method.

⇨ Reference!
See chapter 8.8 *Binary functions* binF.

Setpoint changeover	Shifting	Binary input D1	Information	
SP1	Analog via InP2	Open	⇨	Reference! See chapter 5.4.1 *Setpoint changeover* SP1/SP2, *or shifting analog via* InP2
SP2	Analog via InP2	Closed		
SP1		Open	⇨	Reference! See chapter 5.4.2 *Setpoint changeover* SP1 */ external setpoint via* InP2
External setpoint via InP2		Closed		
	Setpoint SP1 analog via InP2, no binary shifting	Open	⇨	Reference! See chapter 5.4.3 *Setpoint shifting* SP1 *analog via* InP2 */ binary via* dSP
	Setpoint SP1 analog via InP2, binary shifting about setpoint dSP	Closed		
	External setpoint via InP2, no binary shifting	Open	⇨	Reference! See chapter 5.4.4 *External setpoint, setpoint shifting binary via* dSP
	External setpoint via InP2, binary shifting about setpoint dSP	Closed		

5.4.1 Setpoint changeover SP1 / SP2 or setpoint shift analog via InP2

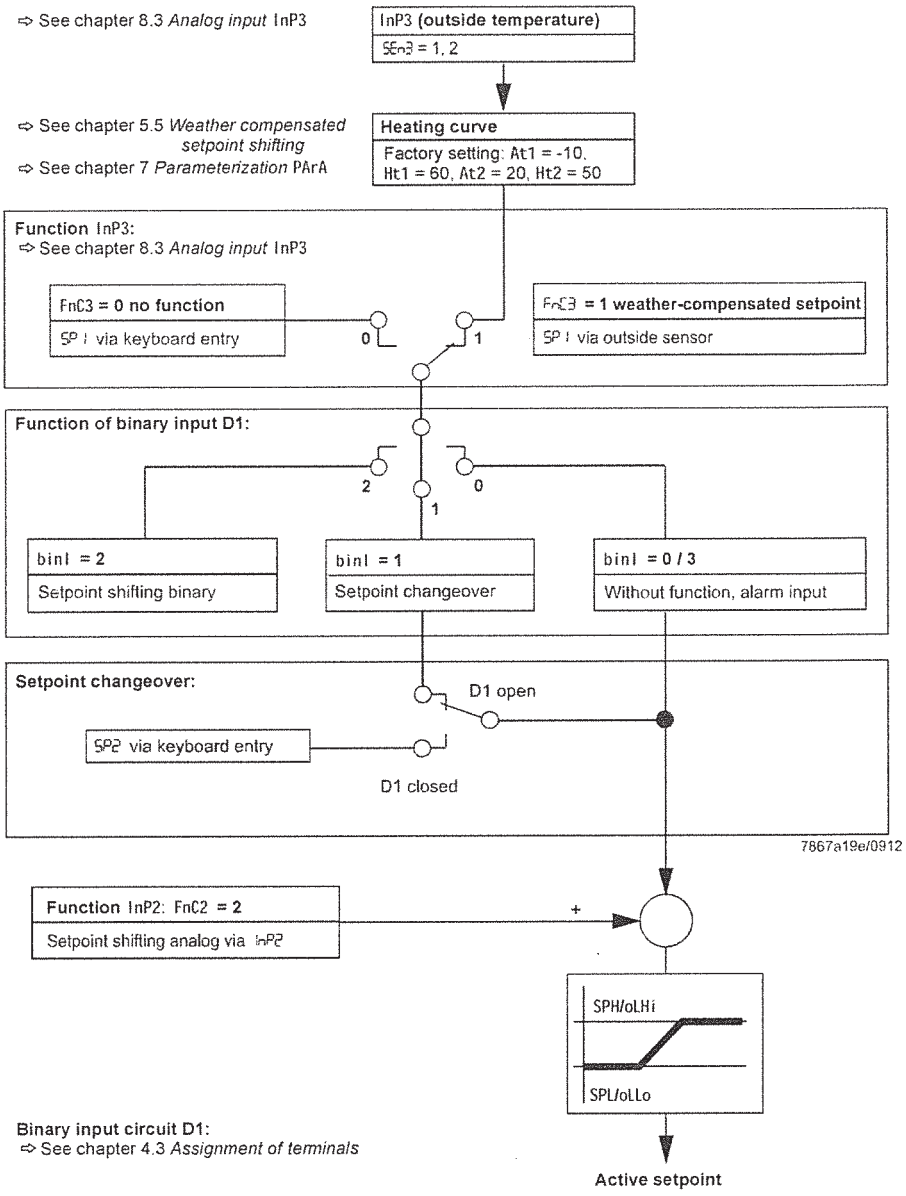

Figure 12: Setpoint changeover or setpoint shift

5.4.2 Setpoint changeover SP1 / external setpoint via InP2

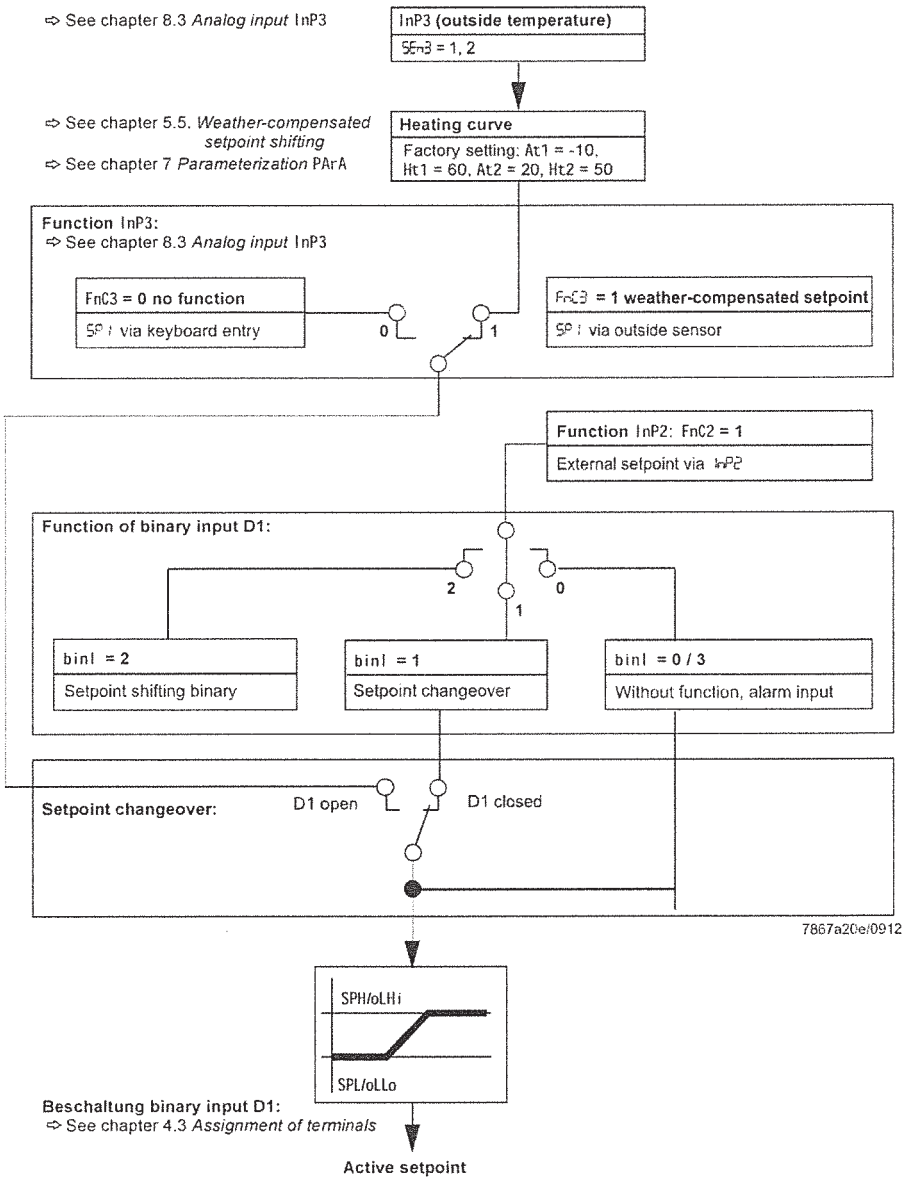

Figure 13: Setpoint changeover SP1 / external setpoint

5.4.3 Setpoint shifting SP1 analog via InP2 / binary via dSP

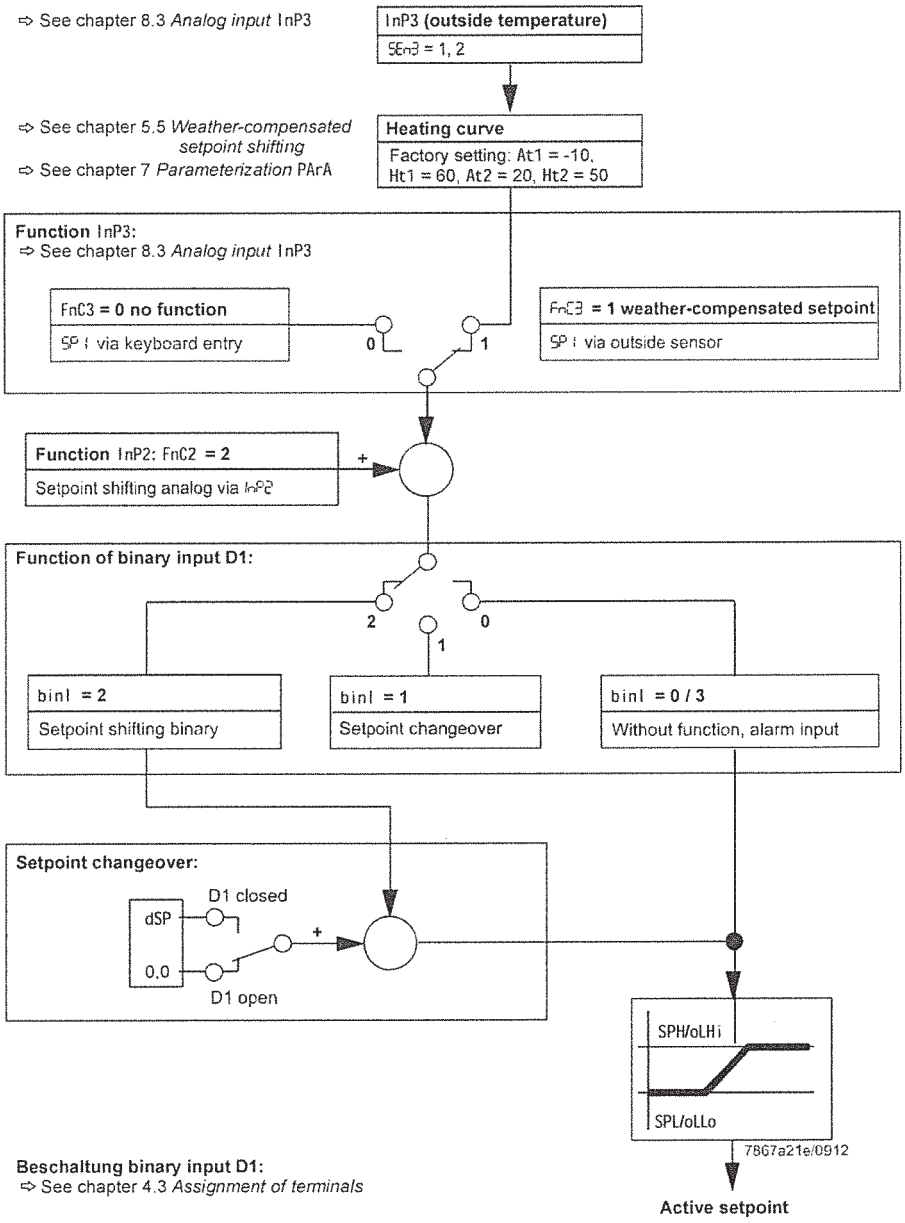

Figure 14: Setpoint shifting analog / binary

5.4.4 External setpoint, setpoint shifting binary via dSP

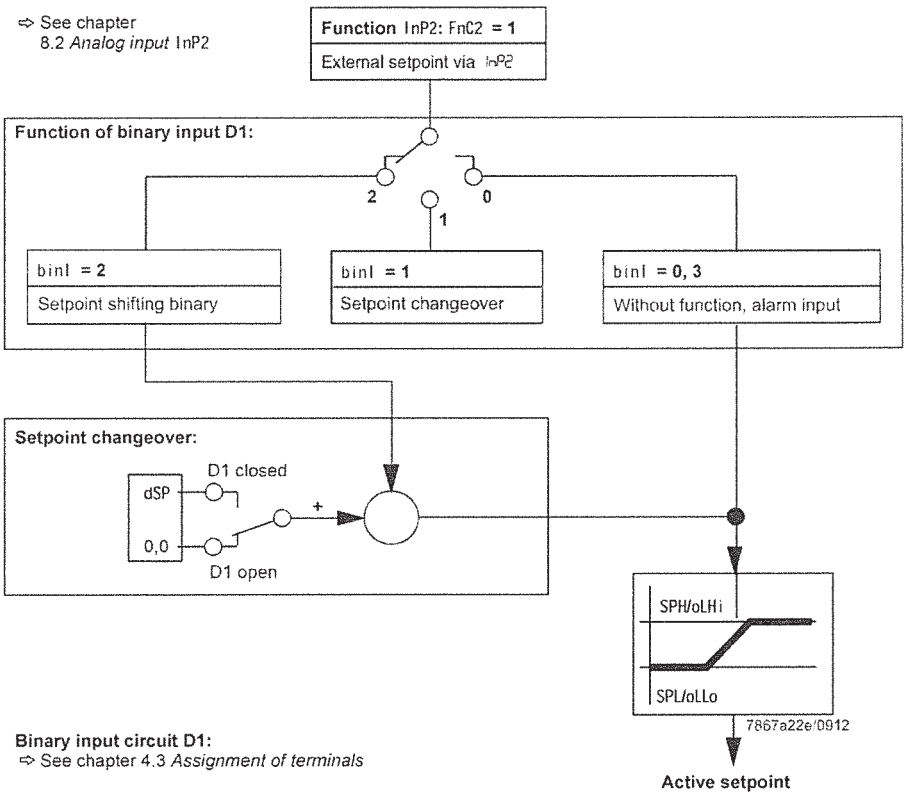

Figure 15: External setpoint, setpoint shifting binary via dSP

5.5 Weather-compensated setpoint shifting

The RWF55 can be configured so that weather-compensated setpoint shifting is activated when an LG-Ni1000 outside sensor or a Pt1000 is connected.

⇨ Reference!
See chapter 8.3 *Analog input* InP3

To take into account the time response of a building, weather-compensated setpoint shifting uses the attenuated outside temperature rather than the current outside temperature.
This attenuated outside temperature is determined on the basis of the current outside temperature and a filter constant. With the RWF55, this filter value (parameter dF3) can be adjusted. In the event of a power failure, this filter is reset. The minimum and maximum setpoints can be set using the lower setpoint limit SPL and the upper setpoint limit SPH.
The system also prevents the lower working range limit oLLo and upper working range limit oLHi from exceeding/dropping below the system temperature limits.

☞ **Note!**
Each RWF55 must have its own separate outside sensor (no parallel connection).
This function has been optimized for heating systems with DHW.

Heating curve

The heating curve describes the relationship between the boiler temperature setpoint and the outside temperature. It is defined by 2 curve points. For 2 outside temperatures, the user defines the boiler temperature setpoint that is required in each case. The heating curve for the weather-compensated setpoint is calculated on this basis. The effective boiler temperature setpoint is limited by the upper setpoint limit SPH and the lower setpoint limit SPL.

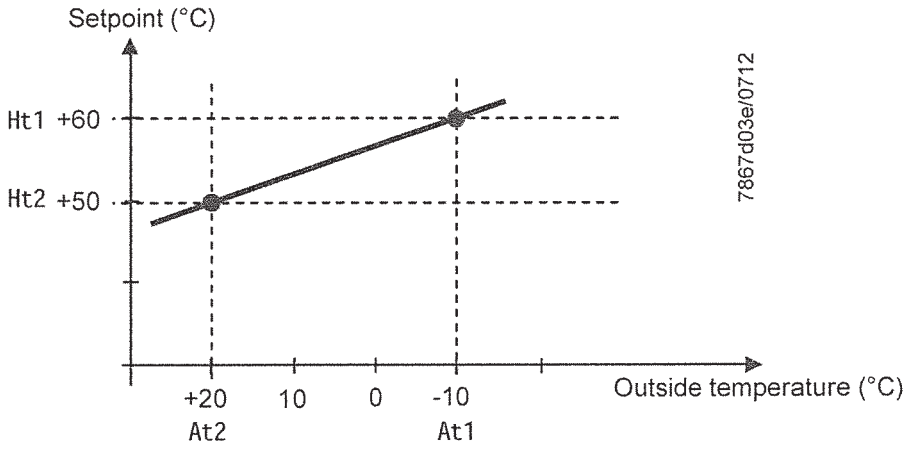

Figure 16: Heating curve slope

The two curve points are set at the parameter level.

⇨ Reference!
See chapter 7 *Parameterization* PArA

5.6 Response threshold (q)

The response threshold (q) defines for what period of time and how much the actual value is allowed to drop before the system switches to high-fire operation.
An internal mathematical calculation using an integration function determines the sum of all areas qeff = q1 + q2 + q3 as shown in the graph. This takes place only when the control deviation (x-w) falls below the value of switch-on threshold HYS1. If the actual value increases, integration is stopped.
If *qeff* exceeds the preset response threshold (q) (can be adjusted at the parameter level), this causes the second burner stage to switch on or – in the case of the 3-position controller/modulating controller – the controlling element to open.
If the current boiler temperature reaches the required setpoint, *qeff* is reset to 0.

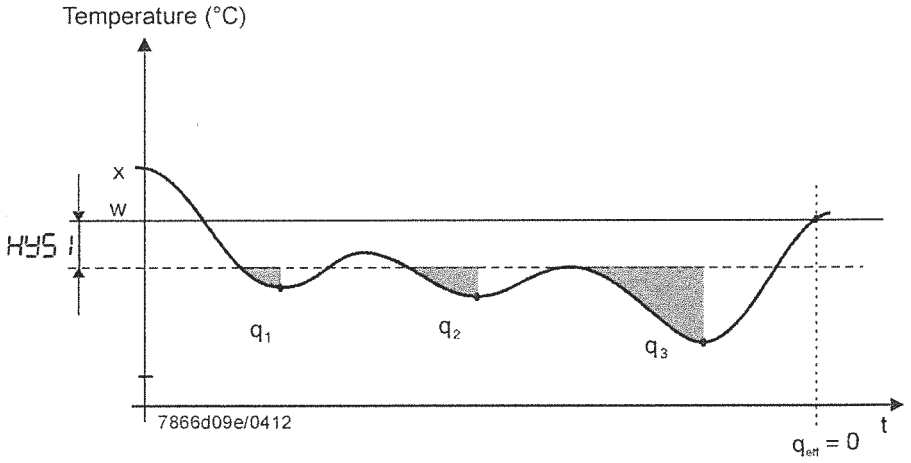

Figure 17: Control sequence response threshold (q)

In contrast to time-dependent switching on, load-dependent switching on offers the advantage of capturing the dynamics of the actual value.
Also, monitoring the progression of the actual value during the change from low-fire to high-fire ensures low switching frequencies to reduce wear and to extend running times.

Cooling controller

The response threshold (q) also works (in the reverse sense) in the case of cooling mode.

5.7 Cold start of plant

Interlocking

Note!
Functions *Cold start of plant* and *Thermal shock protection (TSS)* are interlocked.
Only one function can be activated, but never both at the same time.

Heating controller

When a heating system is switched off for a longer period of time, the actual value will drop of course.
To achieve a faster control response, the controller immediately starts in high-fire operation as soon as the control deviation (x-w) drops below a certain limit value.

This limit is calculated as follows:

Limit value = 2 x (HYS1-HYS3)

In that case, the response threshold (q) is inactive, independent of operating mode and controlled variable (temperature or pressure).

Example

Operating mode: Modulating, 3-position output
HYS1 = -5 K
HYS3 = +5 K
w = 60 °C

Limit value = 2 x (-5 - 5) = 2 x (-10) = -20 K

At an actual value below 40 °C, heating is immediately started in high-fire mode in place of low-fire mode.

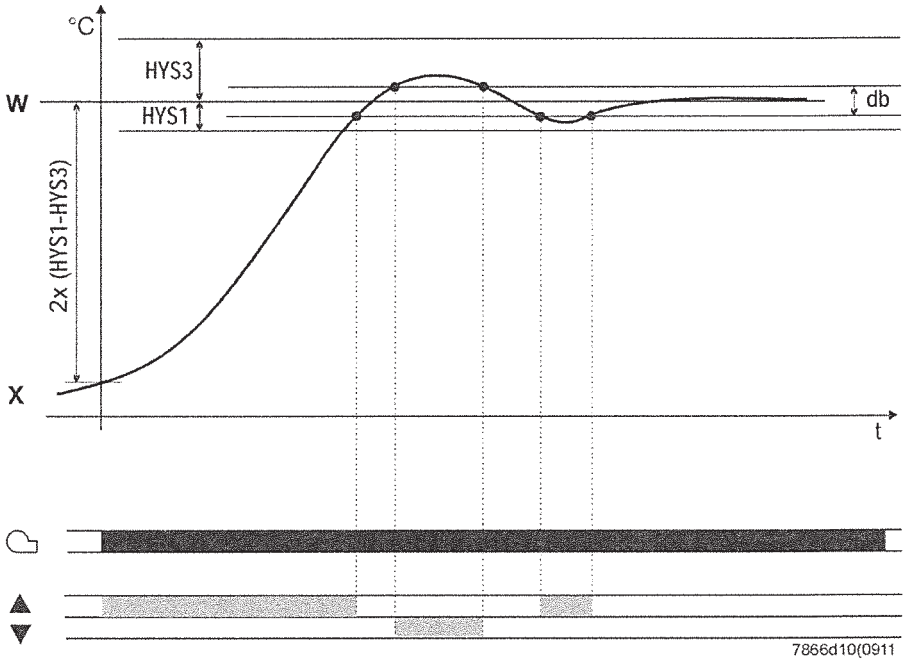

Figure 18: Control sequence *Cold start of plant*

Cooling controller

Cold start of plant also works when the RWF55 is used as a cooling controller.

In that case, the limit value is calculated as follows:
Limit value = 2 x (HYS4-HYS6)

Example

Operating mode: Modulating 3-position output
HYS4 = 5 K
HYS6 = -5 K
w = -30 °C

Limit value = 2 x (5 + 5) = 2 x (10) = +20 K

When the actual value lies above -10 °C, cooling is immediately started in high-fire mode in place of low-fire mode.

5.8 Thermal shock protection (TSS)

Interlocking

Note!
Functions *Cold start of plant* and *Thermal shock protection (TSS)* are interlocked. Only one function can be activated, but never both at the same time.

The controller comes with thermal shock protection (TSS) deactivated; it can be activated at the configuration level.

⇨ Reference!
See chapter 8.5 *Thermal shock protection (TSS)* rAFC.

Function

The function is automatically activated when the actual value drops below the adjustable limit value rAL (exceeds the adjustable limit value with the cooling controller). In that case, the setpoint is approached via a ramp function.
Gradient and slope of the ramp rASL are adjustable. The setpoint ramp has a symmetrical tolerance band toLP. If, during the startup phase, the actual value leaves the tolerance band, the setpoint ramp is stopped until the actual value returns to a level within the tolerance band. The startup phase is ended when the setpoint of the ramp function reaches the final setpoint SP1.

Note!
When thermal shock protection (TSS) is active, the controller operates in low-fire operation. The response threshold (q) is active.

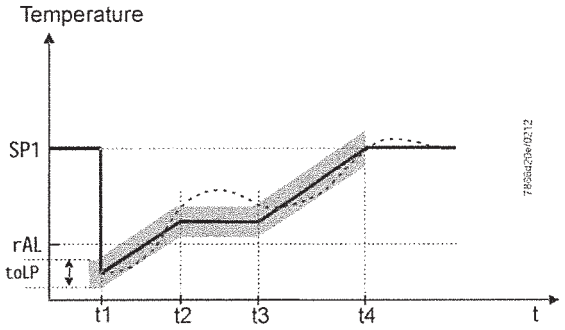

Figure 19: Thermal shock protection (TSS)

Key

Setpoint (w)
Actual value (x)

6 Operation

6.1 Meaning of display and buttons

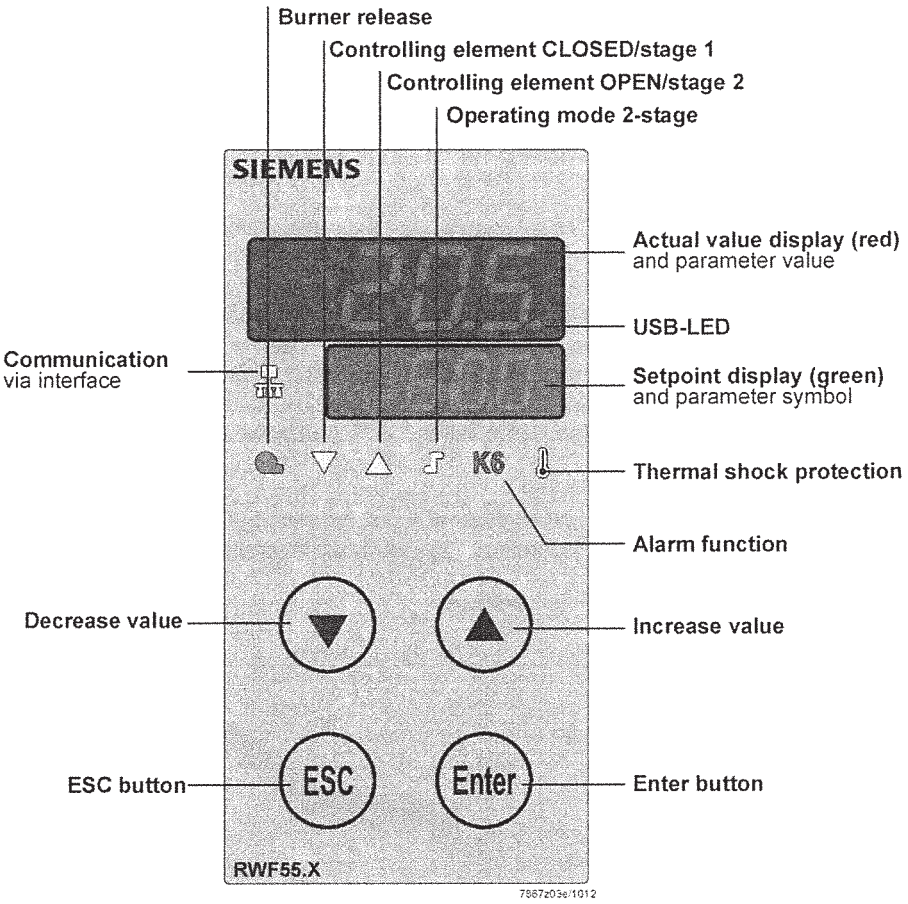

Figure 20: Meaning of display and buttons

Initialization

The two 7-segment displays (red and green) show hyphens and all LEDs light up for about 5 seconds.

Basic display

The upper display (red) shows the actual value.
The lower display (green) shows the setpoint.

⇨ Reference!
See chapter 8.9 *Display* diSP.

Parameter display

When entering parameters, the parameter symbol (green) and the set value (red) appear.

Self-setting function

The actual value is shown on the actual value display (red) and **tUnE** flashes on the setpoint display (green).

⇨ Reference!
See chapter 9.1 *Self-setting function in the high-fire operation.*

Flashing actual value display

The actual value display (red) shows **9999** flashing → Alarm message.

⇨ Reference!
See chapter 13 *What to do if ...*

Manual control

The setpoint display (green) shows **HAnd** flashing.

⇨ Reference!
See chapter 6.4 *Manual control of a modulating burner.*

6.2 Basic display

When switching power on, the displays show hyphens for about 5 seconds.

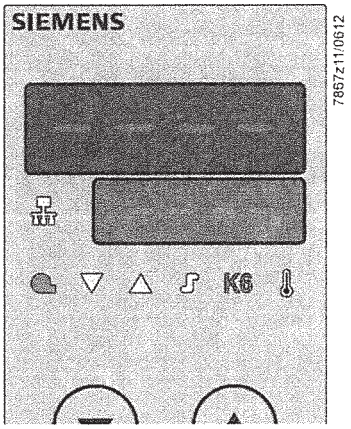

Figure 21: Display start

The state that follows is called *normal display*.
Default display is the actual value and the current setpoint.
Other values can be displayed via configuration level or via PC software ACS411.

⇨ Reference!
See chapter 8.9 *Display* diSP.

Manual control, self-setting, the user level, parameter level and configuration levels can be activated from here.

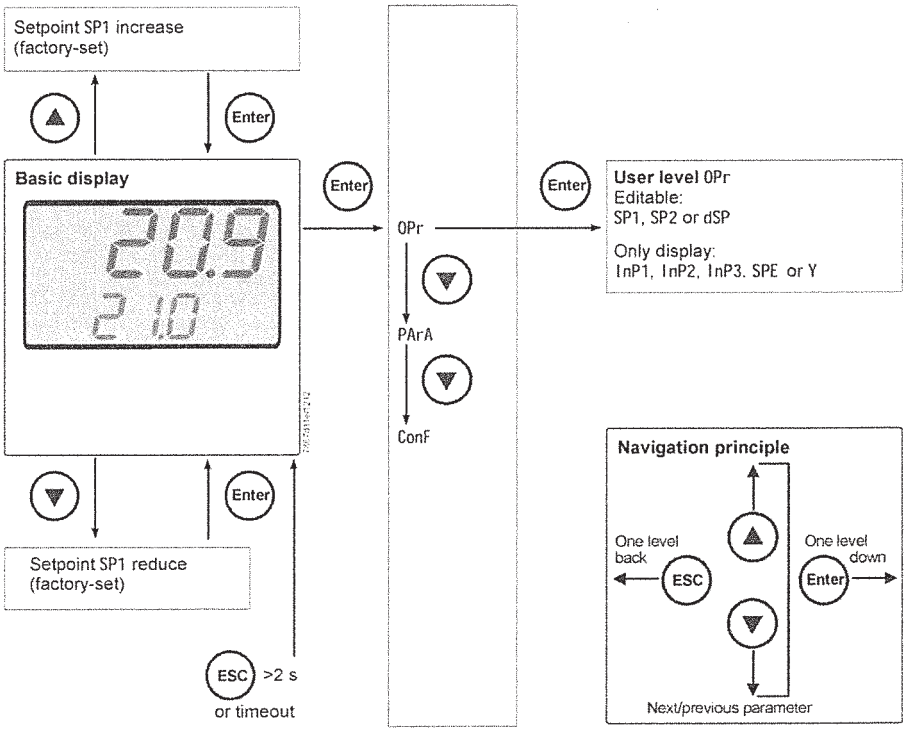

Figure 22: Basic display

6.3 User level

This level is started from the basic display.
Setpoints SP1, SP2 or dSP can be altered.
The values of the analog inputs InP1, InP2, InP3 and SPE (external setpoint) and InP3 (actual angular positioning between 0...100%) can be displayed.

Changing the setpoints

Changing SP1, SP2 or dSP.

* From the basic display, press Enter so that **0Pr** appears

SP1

* Press Enter so that **SP1** appears
* Press Enter and **SP1** flashes
* Press ▲ or ▼ to adjust the required setpoint and press Enter to confirm

SP2

SP2 only appears if **setpoint changeover** is set (binary input bin1 = 1).

* From the basic display, press Enter so that **0Pr** appears
* Press Enter so that **SP1** appears
* Press ▼ to change over to SP2
* Press Enter and **SP2** flashes
* Press ▲ or ▼ to adjust the required setpoint and press Enter to confirm

dSP

dSP only appears if **setpoint shifting** is set (binary input bin1 = 2).

* From the basic display, press Enter so that **0Pr** appears
* Press Enter so that **SP1** appears
* Press ▼ to change over to dSP
* Press Enter and **dSP** flashes
* Press ▲ or ▼ to adjust the required setpoint and press Enter to confirm

Timeout

Timeout after about 180 seconds.

☞ Note!
If the setpoint is not stored, the basic display changes after the timeout tout and the former setpoint is maintained.
The value changes only within the permitted range.

6.4 Manual control, modulating burner

Note!
Manual control can only be activated if the thermostat function **energized** relay K1. If the thermostat function **deenergized** relay K1 during manual control, manual control is ended.

* Press ESC for 5 seconds

HAnd appears on the lower display, alternating with the value for manual control (with continuous controller).

3-position controller

* Open and close fuel-air ratio control by pressing ▲ and ▼

Relay K2 opens the controlling element as long as ▲ is kept depressed.
Relay K3 closes the controlling element as long as ▼ is kept depressed.

The 2 yellow arrows indicate when relay K2 opens or relay K3 closes the controlling element.

Modulating controller

* Change angular positioning by pressing ▲ or ▼

* Adopt flashing new angular positioning by pressing Enter

Per default, the analog output delivers the current angular positioning.

* Return to automatic operation by keeping ESC depressed for 5 seconds

Note!
When activating manual control, angular positioning is set to 0 until another entry is made.

6.5 Manual control, 2-stage burner

Note!
Manual control can only be activated if the thermostat function **active** relay K1. If the thermostat function **inactive** relay K1 during manual control, manual control is ended.

* Press ESC for 5 seconds
* Press ▲ briefly

Relay K2 / K3	Analog output A- / A+
Relay K2 is active Relay K3 is inactive	The analog output delivers the highest value (depending on setting DC 10 V or 20 mA)
Controlling element opens	

* Or press ▼ briefly

Relay K2 / K3	Analog output A- / A+
Relay K2 is inactive Relay K3 is active	The analog output delivers the lowest value (depending on setting DC 0 V, 4 mA, or 0 mA)
Controlling element closes	

* Return to automatic operation by pressing ESC for 5 seconds

6.6 Starting the self-setting function

Start * Press ▲ + ▼ for 5 seconds

Cancel * Cancel with ▲ + ▼

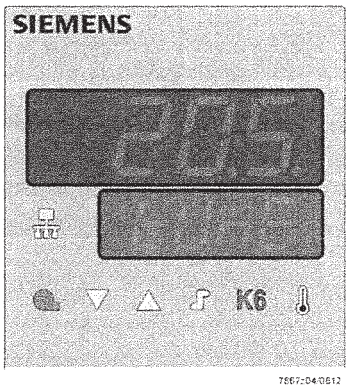

Figure 23: Display of self-setting function

When **tUnE** stops flashing, the self-setting function has been ended.

The parameters calculated by the controller are automatically adopted!

Note!
It is not possible to start **tUnE** in manual control or low-fire operation.

6.7 Display of software version

* Press (Enter) + (▲)

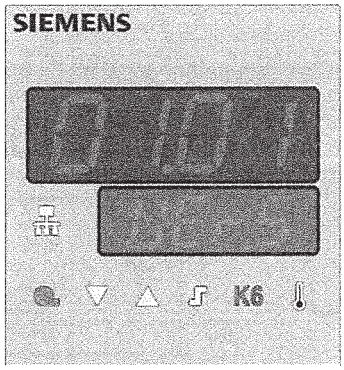

7867z05/0612

Figure 24: Display of software version

Segment test

* Press (Enter) + (▲) again.

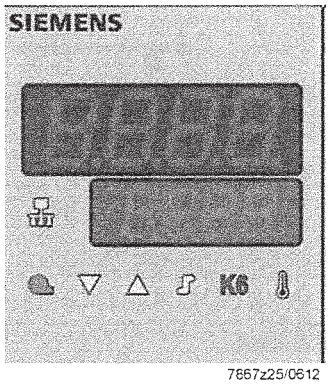

7867z25/0612

Figure 25: Display segment test

All display segments and LEDs light up; the actual value display (red) flashes for about 10 seconds.

7 Parameterization PArA

Here, set the parameters associated directly with the controller's adaptation to the controlled system after the plant has been put into operation.

Note!
The display of the individual parameters depends on the type of controller.

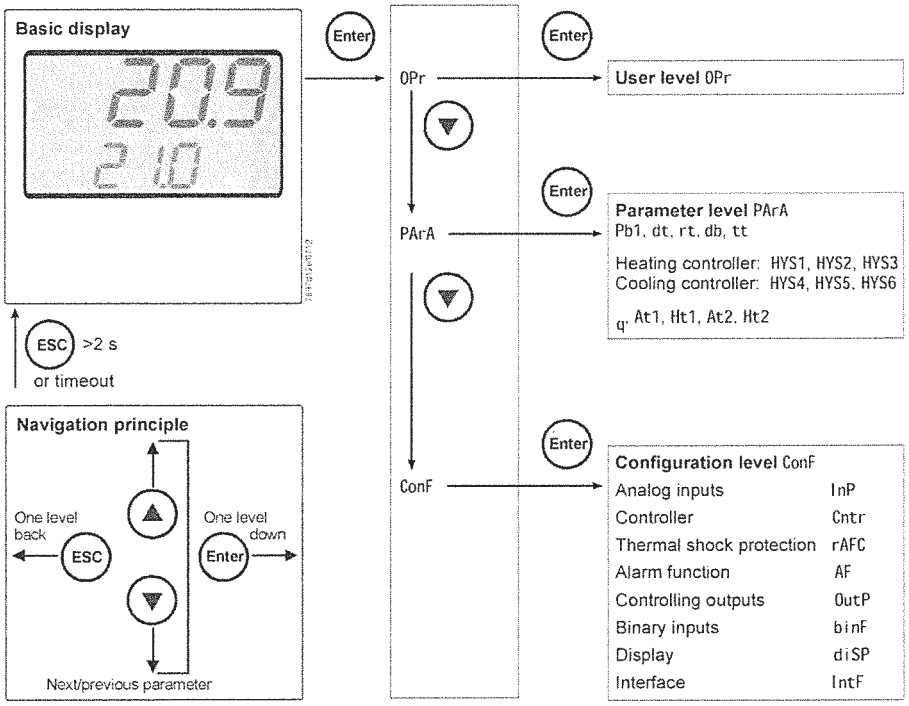

Figure 26: Parameterization

Access to this level can be locked.

Reference!
See chapter 8.9 *Display* diSP.

* From the basic display, press Enter so that **OPr** appears
* Press ▼ so that **PArA** appears
* Press Enter so that the first parameter of the parameter level is displayed

Display of controller parameters

The parameters are shown on the lower setpoint display (green) and their values on the upper/actual value display (red).

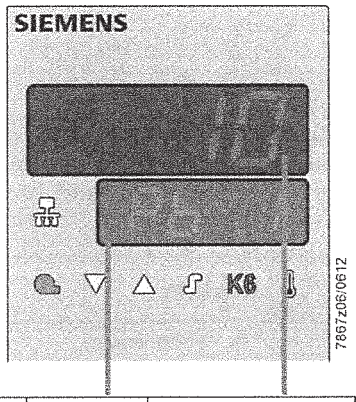

Parameter	Display	Value range	Factory setting	Remarks
Proportional band [1]	Pb1	1...9999 digit	10	Influences the controller's P-action
Derivative time	dt	0...9999 s	80	Influences the controller's D-action With dt = 0, the controller has no D-action
Integral action time	rt	0...9999 s	350	Influences the controller's I-action With rt = 0, the controller has no I-action
Dead band (neutral zone) [1]	db	0.0...999.9 digit	1	For 3-position output 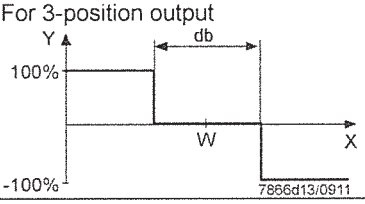
Controlling element running time	tt	10...3000 s	15	Running time of the positioning valve for use with modulating controllers
Switch-on threshold Heating controller [1]	HYS1	-1999...0.0 digit	-5	⇨ Reference! See chapter 5.2 *High-fire operation*
Switch-off threshold stage II Heating controller [1]	HYS2	0.0...HYS3 digit	3	⇨ Reference! See chapter 5.2 *High-fire operation*
Switch-off threshold Heating controller [1]	HYS3	0.0...9999 digit	5	⇨ Reference! See chapter 5.2 *High-fire operation*
Switch-on threshold Cooling controller [1]	HYS4	0.0...9999 digit	5	⇨ Reference! See chapter 5.2 *High-fire operation*
Switch-off threshold stage II Cooling controller [1]	HYS5	HYS6...0.0 digit	-3	⇨ Reference! See chapter 5.2 *High-fire operation*
Switch-off threshold Cooling controller [1]	HYS6	-1999...0.0 digit	-5	⇨ Reference! See chapter 5.2 *High-fire operation*
Response threshold	q	0.0...999.9	0	⇨ Reference! See chapter 5.6 *Response threshold (q)*

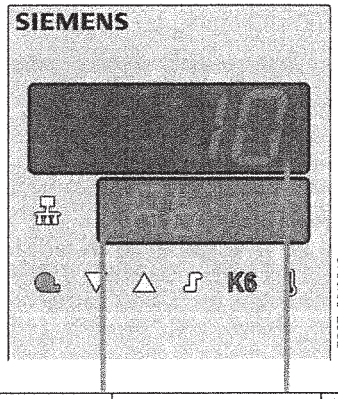

Parameter	Display	Value range	Factory setting	Remarks
Outside temperature Curve point 1 [1]	At1	-40...120	-10	⇨ Reference! See chapter 5.5 *Weather-compensated setpoint shifting*
Boiler temperature Curve point 1 [1]	Ht1	SPL...SPH	60	⇨ Reference! See chapter 5.5 *Weather-compensated setpoint shifting*
Outside temperature Curve point 2 [1]	At2	-40...120	20	⇨ Reference! See chapter 5.5 *Weather-compensated setpoint shifting*
Boiler temperature Curve point 2 [1]	Ht2	SPL...SPH	50	⇨ Reference! See chapter 5.5 *Weather-compensated setpoint shifting*

[1] Setting of decimal place has an impact on this parameter

Note!
When using the RWF55... as a modulating controller only, or as a modulating controller without the burner release function (1P, 1N), parameter HYS1 must be set to 0 and parameters HYS2 and HYS3 must be set to their **maximum** values.

Otherwise, for example, when using default parameter HYS1 (factory setting -5), the 3-position controller is only released when the control deviation reaches -5 K.

8 Configuration ConF

Here, the settings (e.g. acquisition of measured value or type of controller) required directly for commissioning a certain plant are made and, for this reason, there is no need to change them frequently.

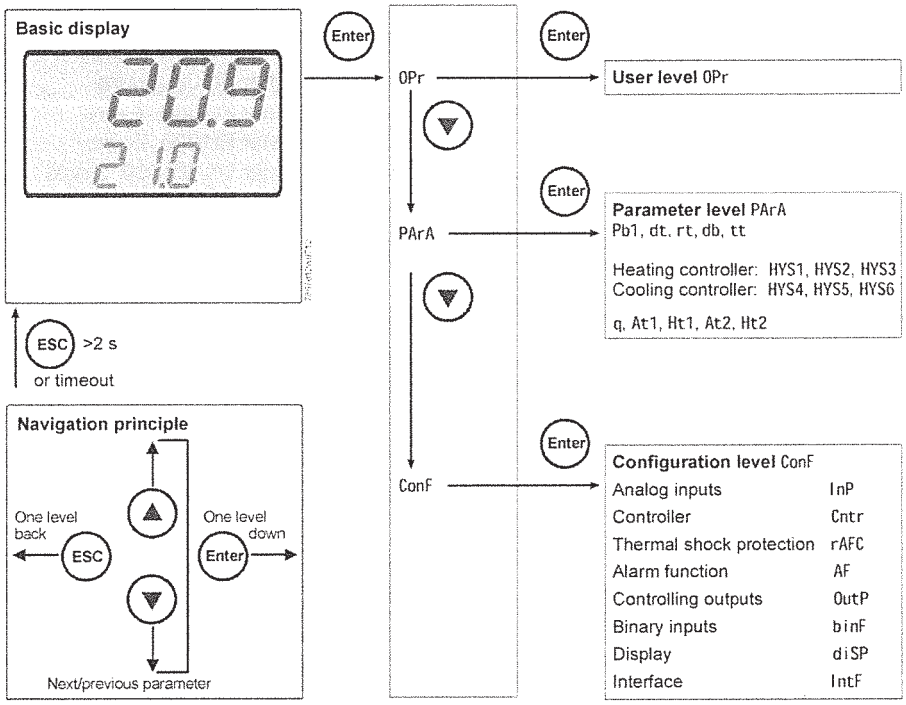

Figure 27: Configure

Access to this level can be locked.

⇨ Reference!
See chapter 8.9 *Display* diSP.

☞ Note!
The following tables show the default settings in columns *Value/selection* and *Description* in **bold** printing.

8.1 Analog input InP1

This input is used to acquire the actual value.

ConF → InP → InP1 →

Parameter	Value/ selection	Description
Sensor type SEn1 Sensor type	**1** 2 3 4 5 6 7 8 9 10 11 12 13 14 15 16 17 18 19	**Resistance thermometer Pt100, 3-wire** Resistance thermometer Pt100, 2-wire Resistance thermometer Pt1000, 3-wire Resistance thermometer Pt1000, 2-wire Resistance thermometer LG-Ni1000, 3-wire Resistance thermometer LG-Ni1000, 2-wire 0...135 Ohm Cu-CuNi T Fe-CuNi J NiCr-Ni K NiCrSi-NiSi N Pt10Rh-Pt S Pt13Rh-Pt R Pt30Rh-Pt6Rh B 0...20 mA 4...20 mA DC 0...10 V DC 0...5 V DC 1...5 V
Correction of measured value OFF1 Offset	-1999... **0...** +9999	Using the measured value correction (offset), a measured value can be corrected to a certain degree, either up or down **Example:** Measured value / Offset / Displayed values 294.7 / +0.3 / 295.0 295.3 / -0.3 / 295.0
⚠ **Caution!** **Measured value correction:** To make the calculation, the controller uses the corrected value (displayed value). This value does not represent the value acquired at the point of measurement. If the measured value correction function is used incorrectly (e.g., overcompensation of measured values → measurement error only present temporarily), this may lead to undesirable plant states.		
Start of display SCL1 Scale low level	-1999... **0...** +9999	In the case of a measuring transducer with standard signal, the physical signal is assigned a display value here Example: 0...20 mA = 0...1500 °C
End of display SCH1 Scale high level	-1999... **100...** +9999	The range of the physical signal can be crossed by 20%, either up or down, without getting a signal informing about the crossing

Parameter	Value/ selection	Description
Filter time constant dF1 Digital filter	0.0... **0.6...** 100.0...	Is used to adapt the digital 2nd order input filter (time in s; 0 s = filter off) If the input signal changes abruptly, about 26% of the change are captured after a time corresponding to the filter time constant **dF** (2 x dF: approx. 59%; 5 x dF: approx. 96%) When the filter time constant is great: - Great attenuation of interference signals - Slow response of actual value display to changes of the actual value - Low limit frequency (low-pass filter)
Temperature unit Unit Temperature unit	**1** 2	**Degrees Celsius** **Degrees** Fahrenheit Unit of temperatures

8.2 Analog input InP2

This input can be used to specify an external setpoint or carry out setpoint shifting.

ConF → InP → InP2 →

Parameter	Value/ selection	Description
Function FnC2	**0** 1 2 3	**No function** External setpoint (display SPE) Setpoint shifting (display dSP) Angular positioning feedback
Sensor type SEn2 Sensor type	**1** 2 3 4 5 6	**0...20 mA** 4...20 mA 0...10 V 0...5 V 1...5 V Resistance teletransmitter
Correction of measured value OFF2 Offset	-1999... **0...** +9999	Using the measured value correction function (offset), a measured value can be corrected by a certain amount, either up or down. **Example:** Measurement value / Offset / Display value 294.7 / +0.3 / 295.0 295.3 / -0.3 / 295.0
⚠ **Caution!** **Measured value correction:** To make the calculation, the controller uses the corrected value (displayed value). This value does not represent the value acquired at the point of measurement. If the measured value correction function is used incorrectly (e.g., overcompensation of measured values → measurement error only present temporarily), this may lead to undesirable plant states.		
Start of display SCL2 Scale low level	-1999... **0...** +9999	In the case of a measuring transducer with standard signal, the physical signal is assigned a display value here. Example: 0...20 mA = 0...1500 °C
End of display SCH2 Scale high level	-1999... **100...** +9999	The physical signal range can be undershot/exceeded by 20% without a measuring range overshoot/undershoot signal being issued.
Filter time constant dF2 Digital filter	0.0... **2...** 100.0...	Is used to adapt the digital 2nd order input filter (time in s; 0 s = filter off). If the input signal changes abruptly, about 26% of the change is captured after a time corresponding to the filter time constant **dF** (2 x dF: approx. 59%; 5 x dF: approx. 96%). If the filter time constant is large: - High attenuation of interference signals - Slow response of actual value display to changes in the actual value - Low limit frequency (low-pass filter)

8.3 Analog input InP3

This input is used to acquire the outside temperature.

ConF → InP → InP3 →

Parameter	Value/ selection	Description
Sensor type SEn3 Sensor type	**0** 1 2	**Switched-off** Resistance thermometer Pt1000 in 2-wire circuit Resistance thermometer LG-Ni1000 in 2-wire circuit
Function FnC3	**0** 1	**No function** Weather-compensated setpoint
Correction of measured value OFF3 Offset	-1999... **0...** +9999	Using the measured value correction function (offset), a measured value can be corrected by a certain amount, either up or down. **Example:** Measurement value / Offset / Display value 294.7 / +0.3 / 295.0 295.3 / -0.3 / 295.0
⚠ **Caution!** **Measured value correction:** To make the calculation, the controller uses the corrected value (displayed value). This value does not represent the value acquired at the point of measurement. If the measured value correction function is used incorrectly (e.g., overcompensation of measured values → measurement error only present temporarily), this may lead to undesirable plant states.		
Filter time constant dF3 Digital filter	0.0... **1278...** 1500.0...	Is used to adapt the digital 2nd order input filter (time in s; 0 s = filter off). If the input signal changes abruptly, about 26% of the change is captured after a time corresponding to the filter time constant **dF** (2 x dF: approx. 59%; 5 x dF: approx. 96%). If the filter time constant is large: - High attenuation of interference signals - Slow response of actual value display to changes in the actual value - Low limit frequency (low-pass filter)

8.4 Controller Cntr

Here, the type of controller, operating action, setpoint limits and presettings for self-optimization are selected.

ConF ➔ Cntr ➔

Parameter	Value/ selection	Description
Controller type CtYP Controller type	1 2	**3-position controller** Modulating controller
Operating action CACt Control direction	0 **1**	Cooling controller **Heating controller** 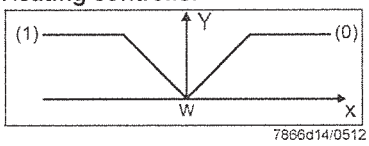 7866d14/0512 (0) = cooling controller: The controller's angular positioning (Y) is >0 when the actual value (x) lies above the setpoint (w) (1) = heating controller: The controller's angular positioning (Y) is >0 when the actual value (x) lies below the setpoint (w)
Setpoint limitation start SPL Setpoint limitation low	-1999... **0...** +9999	Setpoint limitation prevents values from being entered outside the defined range. The setpoint limits are not active in the case of predefining setpoints via the interface. In the case of an external setpoint with correction, the correction value is limited to SPL / SPH.
Setpoint limitation end SPH Setpoint limitation high	-1999... **+100...** +9999	
Self-optimization	**0** 1	**Free** Locked Self-optimization can only be disabled or enabled via the ACS411 setup program If disabled via ACS411 PC software, self-optimization cannot be started via the controller's buttons Setting in the ACS411 setup program ➔ Controller ➔ Self-optimization Self-optimization is also disabled when the parameter level is locked
Lower working range limit oLLo Lower operation range limit	**-1999...** +9999	Note! If the setpoint with the respective hysteresis exceeds the upper working range limit, the switch-on threshold is substituted by the working range limit.
Upper working range limit oLHi Upper working range limit	-1999... **+9999**	Note! If the setpoint with the respective hysteresis drops below the lower working range limit, the switch-off threshold is substituted by the working range limit.

8.5 Thermal shock protection (TSS) rAFC

The RWF55... can be operated as a fixed value controller with or without ramp function.

ConF ➔ rAFC ➔

Parameter	Value/ selection	Description
Function FnCt Function	**0** 1 2	**Switched off** Gradient Kelvin/minute Gradient Kelvin/hour ☞ Note! With **FnCt** = 1 or 2, *Thermal shock protection* (TSS) is automatically activated as soon as the actual value drops below the adjustable absolute limit value **rAL** (heating controller) or exceeds it (cooling controller).
Ramp slope rASL Ramp slope	**0.0...** 999.9	Slope of **ramp** slope (only with functions 1 and 2)
Tolerance band ramp toLP Tolerance band ramp	**2 x |HYS1| = 10**...9999	Width of tolerance band (in K) about the setpoint (only with function 1 and 2) Heating controller: Smallest possible factory setting: **2 x |HYS1| = 10 K** To monitor the actual value in connection with thermal shock protection (TSS), a tolerance band can be laid about the setpoint curve. If the limit values are crossed, the ramp is stopped. ⇨ Reference! See chapter 5.8 *Thermal shock protection (TSS).* Cooling controller: Smallest possible factory setting: **2 x |HYS4| = 10 K**
☞ Note! In the event of a faulty sensor or manual control, the ramp function is stopped. The outputs behave the same way they do when the measuring range is crossed (configurable). Functions *Cold start of plant* and *Thermal shock protection (TSS)* are interlocked. Only one function can be activated, but never both at the same time.		
Limit value rAL Ramp limit	0...250	**Heating controller:** If the actual value lies below this limit value, the setpoint is approached in the form of a ramp until final setpoint SP1 is reached. **Cooling controller:** If the actual value lies above this limit value, the setpoint is approached in the form of a ramp until final setpoint SP1 is reached.

8.6 Alarm function AF

ConF → AF →

The alarm function can be used to monitor the analog inputs. If the limit value is exceeded, multifunctional relay K6 is activated (depending on the switching characteristic). The alarm function can have different switching functions (**Ik1** to **Ik8**) and can be set to a deviation from the active setpoint or to a fixed limit value.

Limit value AL relative to setpoint (w)

In the case of alarm functions **Ik1** to **Ik6**, the actual value InP1 is monitored in relation to a limit value AL that has to be set (with the absolute value dependent on the setpoint (w)).

Ik1

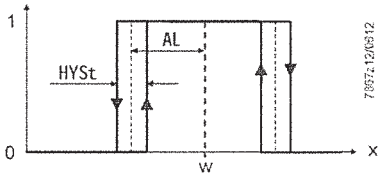

Ik2

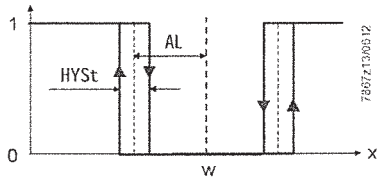

Ik3

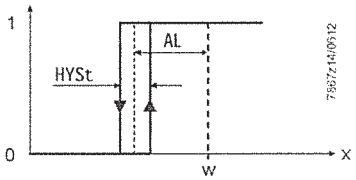

Ik4

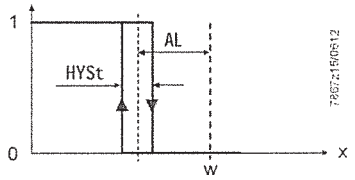

Ik5

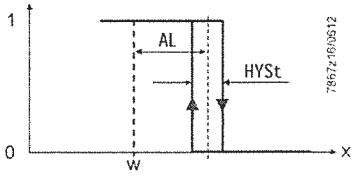

Ik6

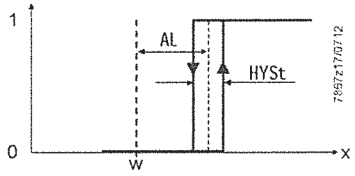

Figure 28: Alarm function Ik1...Ik6

Fixed limit value **AL**

In the case of alarm functions **Ik7** and **Ik8**, all analog inputs InP1...InP3 can be monitored in relation to a fixed limit value AL that has to be set.

Ik7

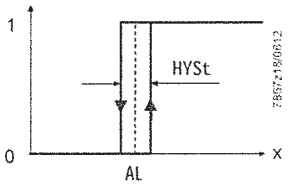

Ik8

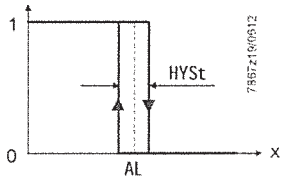

Figure 29: Alarm function Ik7 and Ik8

Parameter	Value/ selection	Description
Function FnCt Function	**0** 1 2 3 4 5 6 7 8 9 10 11 12	**Without function** **Ik1** monitored input InP1 **Ik2** monitored input InP1 **Ik3** monitored input InP1 **Ik4** monitored input InP1 **Ik5** monitored input InP1 **Ik6** monitored input InP1 **Ik7** monitored input InP1 **Ik8** monitored input InP1 **Ik7** monitored input InP2 **Ik8** monitored input InP2 **Ik7** monitored input InP3 **Ik8** monitored input InP3
Limit value AL Alarm value	-1999... **0...** +9999	Limit value or deviation from setpoint to be monitored (see alarm functions **Ik1** to **Ik8**: limit value AL). Limit value range for **Ik1** and **Ik2**: 0...9999
Switching difference HYSt Hysteresis	0... **1...** 9999	Switching difference in relation to limit value (see alarm functions **Ik1** to **Ik8**: hysteresis HYSt).
Response by Out of Range ACrA Response by out of range	 **0** 1	Switching state in the case of measuring range overshoot or undershoot (Out of Range). **Switched-off** ON

8.7 Control outputs OutP

For fuel-air ratio control purposes, the RWF55 has the binary outputs (K2, K3) and the analog output (A+, A-).
The burner is released via relay K1.

The switching states of relay K1 *Burner release* (LED green), relay K2 *Controlling element OPEN,* and relay K3 *Controlling element CLOSE* (yellow LED arrows) are indicated on the controller front.

Binary outputs

The binary outputs of the RWF55 offer no setting choices.

Analog output

The RWF55 has an analog output.

The analog output offers the following setting choices:

ConF → OutP →

Parameter	Value/ selection	Description
Function FnCt Function	0 1 2 3 **4**	No function Input InP1 is delivered Input InP2 is delivered Input InP3 is delivered **Controller's angular positioning is delivered (modulating controller)**
Signal type SiGn Type of signal	**0** 1 2	**0...20 mA** 4...20 mA DC 0...10 V Physical output signal
Value when out of range rOut Value when out of range	**0**...101	Signal (in percent) when measuring range is crossed 101 = last output signal
Zero point OPnt Zero point	-1999... **0...** +9999	A value range of the output variable is assigned to a physical output signal
End value End End value	-1999... **100...** +9999	

8.8 Binary input binF

This setting decides on the use of the binary inputs.

⇨ Reference!
See chapter 5.4 *Preselected setpoint*

ConF → binF →

Parameter	Value/ selection	Description
Binary inputs bin1 Binary input 1	**0** 1 2 3	**No function** Setpoint changeover Setpoint shift Alarm input
bin2 Binary input 2	**4**	**Changeover of operating mode** Burner modulating: Contacts D2 and DG open Burner 2-stage: Contacts D2 and DG closed

8.9 Display diSP

By configuring the position of the decimal point and automatic changeover (timer), both LED indications can be adapted to the respective requirements. Timeout tout for operation and the locking of levels can be configured as well.

ConF → diSP →

Parameter	Value/ selection	Description
Upper display diSU Upper display		Display value for upper display
	0	Switched off
	1	**Analog input** InP1
	2	Analog input InP2
	3	Analog input InP3
	4	Controller's angular positioning
	6	Setpoint
	7	End value with thermal shock protection
Lower display diSL Lower display		Display value for lower display
	0	Switched off
	1	Analog input InP1
	2	Analog input InP2
	3	Analog input InP3
	4	Controller's angular positioning
	6	**Setpoint**
	7	End value with thermal shock protection
Timeout tout	0... **180**... 255	Time (s) on completion of which the controller returns automatically to the basic display, if no button is pressed
Decimal point dECP Decimal point	**0** 1 2	**No decimal place** One decimal place Two decimal places If the value to be displayed cannot be shown with the programmed decimal point, the number of decimal places is automatically reduced. If the measured value drops again, the number of decimal places is increased until the programmed value is reached
Locking of levels CodE	**0** 1 2 3	**No locking** Locking of configuration level Locking of parameter level Locking of keyboard

8.10 Interface IntF

The controller can be integrated into a data network using an optional RS-485 interface or an optional Profibus DP interface.

ConF → IntF →

Parameter	Value/ selection	Description
Baud rate bdrt Baud rate	**0** 1 2 3	**4800 Baud** 9600 Baud 19200 Baud 38400 Baud
Device address Modbus Adr Device address	0... **1**... 254	Address in the data network
Device address Profibus dP Device address	0...**125**	Only RWF55.6
Remote Detection Timer dtt Remote detection timer	0... **30**... 7200 s	0 = Switched-off

Note!
If communication is taking place via the setup interface, the other interfaces are inactive.

9 Self-setting function

9.1 Self-setting function in high-fire operation

Note!
tUnE is only possible in high-fire operation, in *modulating burner* mode.

Self-setting function **tUnE** is a proper software function unit integrated in the controller. In *modulating* mode, **tUnE** tests in high-fire operation the response of the controlled system to angular positioning steps according to a special procedure. A complex control algorithm uses the response of the controlled system (actual value) to calculate and automatically store the control parameters for a PID or PI controller (set dt = 0!). The **tUnE** procedure can be repeated any number of times.

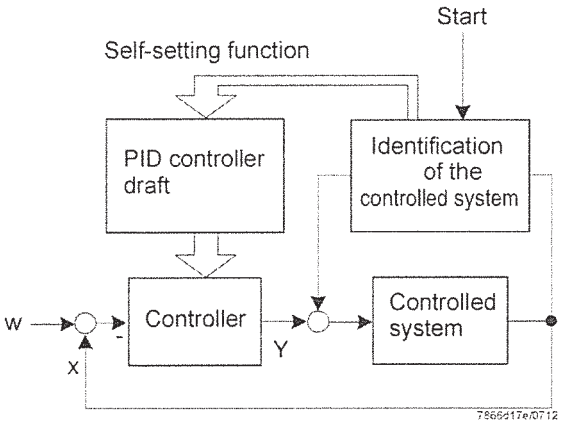

Figure 30: Self-setting function in high-fire operation

2 procedures

The **tUnE** function uses 2 different methods that are automatically selected depending on the dynamic state of the actual value and the deviation from the setpoint at startup. **tUnE** can be started from within any dynamic actual value sequence.
If there is a **great difference between actual value and setpoint** when **tUnE** is activated, a switching line is established about which the controlled variable performs forced oscillations during the self-setting process. The switching line is set to such a level that the actual value should not exceed the setpoint.

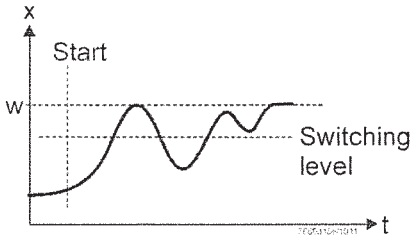

Figure 31: Great difference between actual value and setpoint

With a **small deviation** between setpoint and actual value (after the controlled system has settled, for instance), forced oscillation about the setpoint is performed.

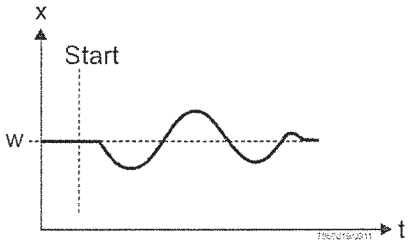

Figure 32: Small control deviation

The data of the controlled system recorded for the forced oscillations are used to calculate the controller parameters **rt**, **dt**, **Pb1** and a filter time constant **dF1** for actual value filtering that is optimized for this controlled system.

Conditions

- High-fire operation in *modulating burner* mode
- The thermostat function (relay K1) must be constantly activated; otherwise **tUnE** will be canceled and no optimized controller parameters will be adopted
- The above mentioned actual value oscillations during the self-setting process must not exceed the upper threshold of the thermostat function (increase if necessary, and lower the setpoint)

Note!
A successfully started *Self-setting* function is automatically aborted after 2 hours. This could occur in the case of a controlled system that responds slowly, for example, where, even after 2 hours, the described procedures cannot be successfully completed.

9.2 Checking the controller parameters

Optimum adjustment of the controller to the controlled system can be checked by recording a startup sequence with the control loop closed. The following diagrams indicate possible incorrect adjustments, and their correction.

Example

The response to a setpoint change is shown here for a 3rd order controlled system for a PID controller. The method used for adjusting the controller parameters can, however, also be applied to other controlled systems. A suitable value for **dt** is **rt/4**.

Pb too small

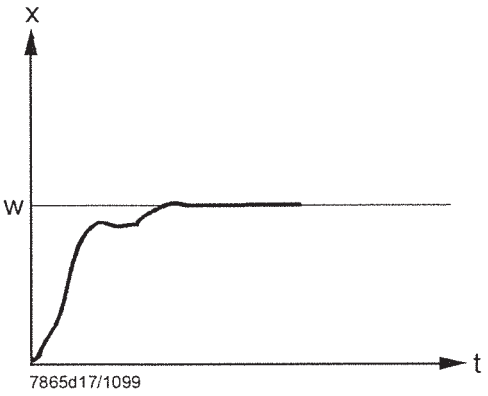

Figure 33: Pb too small

Pb too large

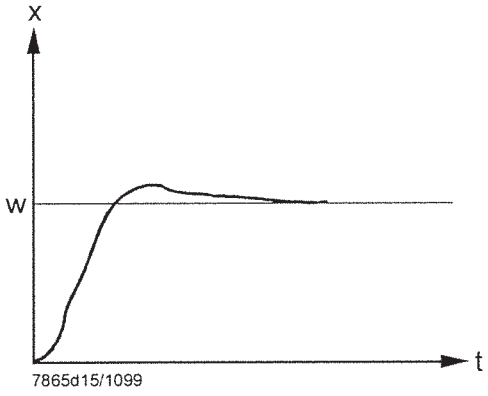

Figure 34: Pb too large

rt, dt too small

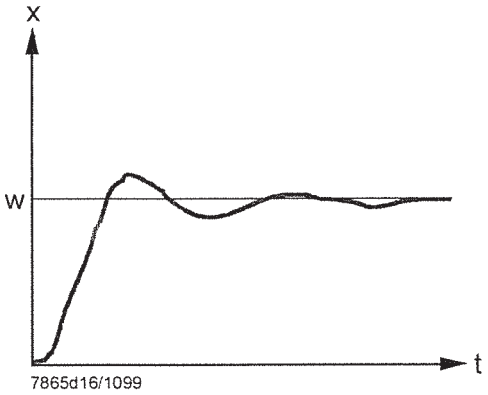

Figure 35: rt, dt too small

rt, dt too large

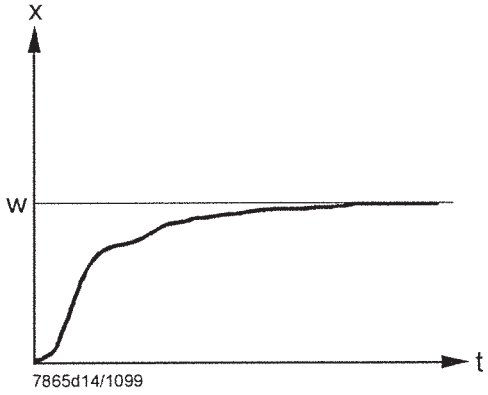

Figure 36: rt, dt too large

Optimum adjustment

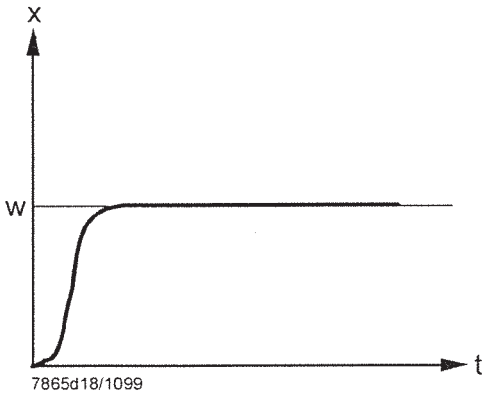

Figure 37: Optimum adjustment

10 PC software ACS411

PC software ACS411 is an operating module for use with the RWF55... universal controller and designed for the following basic tasks:

- Visualization of system state covering the following data:
  - Parameters
  - Process data
  - Configuration and parameterization of the controller (individual parameters)
  - Saving and restoration of parameter sets

A USB cable can be used to establish the connection between PC (USB plug type A, 4 pins) and RWF55 (USB plug type Mini B, 5 pins).

Note!
The cable must be purchased on site.

10.1 Safety notes

Caution!
PC software ACS411 is a convenient tool for use by qualified personnel, designed to commission and optimize the universal controller. Since the required actions and settings are safety-related, the user has a special obligation to exercise due care. Although specific technical measures have been taken to prevent incorrect entry of data and wrong parameter values, the user must check the correct function of the plant in a conventional way both during and after commissioning and – if required – ensure manual shutdown.

10.2 Setting the correct system parameters

Caution!
It should be noted that the characteristics of the universal controller are determined primarily by the parameter settings made, rather than by the type of unit. It is especially the OEM which is responsible for making certain that the controller's parameter settings are in compliance with the standards covering the respective application or type of plant. Responsibility for the parameter settings is assumed by the person who, in accordance with the access rights, makes or has made changes at the respective setting level. The detailed descriptions and safety notes given in the User Manual on the system components must also be observed.

10.3 Changing the parameters or the plant's configuration

Caution!
After changing parameters, all parameters must be checked via the unit's display to ensure they are correctly set – without making use of the PC software ACS411.

10.4 Place of installation



Caution!
PC software ACS411 is designed for use on site, that is, within viewing and hearing distance of the respective combustion plant. This means that remote control is not permitted.

10.5 License and liability regulations



Note!
For ENDUSER LICENSE AGREEMENT for PC software ACS411, refer to program menu item *Info* → *Software documentation.*
IMPORTANT – PLEASE READ CAREFULLY!

10.6 Procurement of PC software ACS411

For ordering the ACS411 software and updates, please contact your supplier or heating engineer.

10.7 Languages

PC software ACS411 is available in English and German. To select the language you require, go to program menu item *File* → *Default settings* → *Program language* (ACS411 setup program must be restarted).

10.8 Operating systems : Operating

- Windows 2000 SP4
- Windows 7 - 32 bit
- Windows 7 - 64 bit
- Windows VISTA
- Windows XP

10.9 Prerequisites for hardware

- Free hard disk memory: 300 MB
- RAM: 512 MB

10.10 Installation

Note!
First, install PC software ACS411; then, connect the controller. If not observed, an error message is delivered.

PC software ACS411 is supplied on a CD.

* Insert CD in the CD or DVD drive.
  Setup starts automatically.

* Follow the instructions appearing on the screen.

* Connect PC and controller via the USB cable.
  New hardware is identified and USB driver installed.
  This may take a few minutes.

* Follow further instructions given on the screen and wait until the installation is successfully completed.

10.11 Others

10.11.1 Use of USB port : Use of

Use

The USB port is intended for temporary use to make the parameter settings, the configuration and for work in connection with commissioning.
When using the USB port, the controller can be securely operated, tested and set with no need for using the mains cable.

10.11.2 Powering the controller via the USB port : Powering the controller via the port

Using the HUB: Using the

If the controller shall be powered via the USB port, a HUB with power supply is required, capable of delivering at least 500 mA at every outlet.

Switching off: Switching off

When supplying power via the USB port, relays and analog output are deenergized to reduce power consumption.

Note!
Check to ensure that power supply to the measuring converter (G+ and G-) is not connected. This increases power usage via the USB port as well.

Measuring accuracy:

The measuring accuracy specified in chapter 12 *Technical data* does not apply when powering the controller via the USB port.

11 Modbus interface

The tables that follow in this chapter specify the addresses of the readable and writable words that the customer is able to access. The customer may read and/or write the values using SCADA programs, PLCs, or similar.

The entries under *Access* have the following meanings:

R/O **R**ead **O**nly, value can only be read
R/W **R**ead/**W**rite, value can be read and written

The number of characters specified under *Data type* in the case of character strings includes the final **\0**.

Example:

Char10 means that the text is up to **9** characters long. The final **\0** character is then added to this.

11.1 User level

Address	Access	Data type	Signal reference	Parameter
0x0000	R/O	Float	X1	Analog input InP1
0x0002	R/O	Float	X2	Analog input InP2
0x0004	R/O	Float	X3	Analog input InP3
0x0006	R/O	Float	WR	Actual setpoint
0x0008	R/W	Float	SP1	Setpoint 1
0x000A	R/W	Float	SP2 (= dSP)	Setpoint 2
0x1035	R/O	Float	---	Analog input InP3 (unfiltered)
0x1043	R/O	Float	---	Actual angular positioning
0x1058	R/O	Word	B1	Burner alarm

11.2 Parameter level

Address	Access	Data type	Signal reference	Parameter
0x3000	R/W	Float	Pb1	Proportional range 1
0x3004	R/W	Float	dt	Derivative action time
0x3006	R/W	Float	rt	Integral action time
0x300C	R/W	Float	db	Dead band
0x3012	R/W	Word	tt	Controlling element running time
0x3016	R/W	Float	HYS1	Switch-on threshold
0x3018	R/W	Float	HYS2	Switch-off threshold down
0x301A	R/W	Float	HYS3	Switch-off threshold up
0x301C	R/W	Float	HYS4	Switch-on threshold (cooling)
0x301E	R/W	Float	HYS5	Switch-off threshold down (cooling)
0x3020	R/W	Float	HYS6	Switch-off threshold up (cooling)
0x3022	R/W	Float	q	Reaction threshold
0x3080	R/W	Float	At1	Outside temperature 1
0x3082	R/W	Float	Ht1	Boiler temperature 1
0x3084	R/W	Float	At2	Outside temperature 2
0x3086	R/W	Float	Ht2	Boiler temperature 2

11.3 Configuration level

Address	Access	Data type	Signal reference	Parameter
0x3426	R/W	Float	SCL1	Start of display input 1
0x3428	R/W	Float	SCH1	End of display input 1
0x3432	R/W	Float	SCL2	Start value input 2
0x3434	R/W	Float	SCH2	End value input 2
0x3486	R/W	Float	SPL	Start of setpoint limitation
0x3488	R/W	Float	SPH	End of setpoint limitation
0x342A	R/W	Float	OFFS1	Offset input E1
0x3436	R/W	Float	OFFS2	Offset input E2
0x343A	R/W	Float	OFFS3	Offset input E3
0x1063	R/W	Word	FnCt	Ramp function
0x1065	R/W	Float	rASL	Ramp slope
0x1067	R/W	Float	toLP	Tolerance band ramp
0x1069	R/W	Float	rAL	Limit value
0x1075	R/W	Float	dtt	Remote Detection Timer
0x1077	R/W	Float	dF1	Filter constant input 1
0x1079	R/W	Float	dF2	Filter constant input 2
0x107B	R/W	Float	dF3	Filter constant input 3
0x107D	R/O	Float	oLLo	Lower working range limit
0x107F	R/O	Float	oLHi	Upper working range limit
0x106D	R/W	Word	FnCt	Alarm relay function
0x106F	R/W	Float	AL	Alarm relay limit value (limit value alarm)
0x1071	R/W	Float	HYSt	Alarm relay hysteresis

11.4 Remote operation

Address	Access	Data type	Signal reference	Parameter
0x0500	R/W	Word	REM	Activation remote operation *
0x0501	R/W	Word	rOFF	Controller OFF in remote setpoint **
0x0502	R/W	Float	rHYS1	Switch-on threshold remote
0x0504	R/W	Float	rHYS2	Switch-off threshold down remote
0x0506	R/W	Float	rHYS3	Switch-off threshold up remote
0x0508	R/W	Float	SPr	Setpoint remote
0x050A	R/W	Word	RK1	Burner release remote operation
0x050B	R/W	Word	RK2	Relay K2 remote operation
0x050C	R/W	Word	RK3	Relay K3 remote operation
0x050D	R/W	Word	RK6	Relay K6 remote operation
0x050E	R/W	Word	rStEP	Step-by-step control remote operation
0x050F	R/W	Float	rY	Angular positioning output remote operation
0x0511	R/W	Float	rHYS4	Switch-on threshold remote (cooling)
0x0513	R/W	Float	rHYS5	Switch-off threshold down remote (cooling)
0x0515	R/W	Float	rHYS6	Switch-off threshold up remote (cooling)

Legend

* = Local

** = Controller OFF

11.5 Device data

Address	Access	Data type	Signal reference	Parameter
0x8000	R/O	Char12	---	Software version
0x8006	R/O	Char14	---	VdN number

11.6 Device state

Address	Access	Data type	Signal reference	Parameter
0x0200	R/O	Word	---	Outputs and states
			Bit 0	Output 1
			Bit 1	Output 3
			Bit 2	Output 2
			Bit 3	Output 4
			Bit 8	Hysteresis limitation
			Bit 9	Control system
			Bit 10	Self-optimization
			Bit 11	Second setpoint
			Bit 12	Measuring range overshoot InP1
			Bit 13	Measuring range overshoot InP2
			Bit 14	Measuring range overshoot InP3
			Bit 15	Calibration mode
0x0201	R/O	Word	---	Binary signals and hardware detection
			Bit 0	Operation mode 2-stage
			Bit 1	Manual mode
			Bit 2	Binary input D1
			Bit 3	Binary input D2
			Bit 4	Thermostat function
			Bit 5	First controller output
			Bit 6	Second controller output
			Bit 7	Alarm relay
			Bit 13	Analog output available
			Bit 14	Interface available

12 Profibus-DP interface

12.1 RS-485 Technology transfer

Transmission is carried out in accordance with the RS-485 standard. This covers all areas in which high transmission speeds and simple, inexpensive installation technology are required. A twisted, shielded copper cable with a wire pair is used for this purpose.
The bus structure enables non-reacting coupling and decoupling of stations or gradual commissioning of the system. Subsequent extensions have no effect on stations that are already in operation.
A transmission speed of between 9.6 kbit/s and 12 Mbit/s can be selected. This is selected as a standard value for all devices on the bus during system commissioning.

Basic features

Network topology	Linear bus, active bus terminator at both ends, branching only permitted with baud rates of <1.5 Mbit/s
Medium	Shielded, twisted cable
Number of stations	32 stations in each segment without repeaters. With repeaters, can be extended to 126 (maximum of 9 repeaters permitted)
Connectors	Preferably 9-pin D-Sub connectors

Structure

All devices must be connected in a line structure. Up to 32 nodes (masters or slaves) may be interconnected within this kind of segment. If there are more than 32 nodes, repeaters must be used (to increase the number of devices, for example).

Cable length

The maximum cable length depends on the transmission speed. The cable length specified can be increased by using repeaters. It is recommended that you do not connect more than 3 repeaters in series.

Baud rate (kbit/s)	9.6	19.2	93.75	187.5	500	1500	12000
Range/ segment	1200 m	1200 m	1200 m	1000 m	400 m	200 m	100 m

Range in relation to transmission speed.

Bus terminator

At the beginning and end of each segment, the bus is terminated by terminators. To enable fault-free operation, you must ensure that the two bus terminators are constantly supplied with power. The terminators are located in the Profibus connectors and can be activated by moving the slide switch to ON.

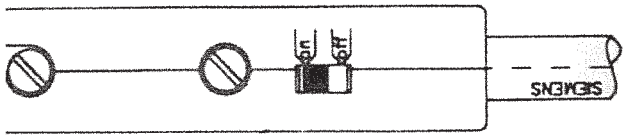

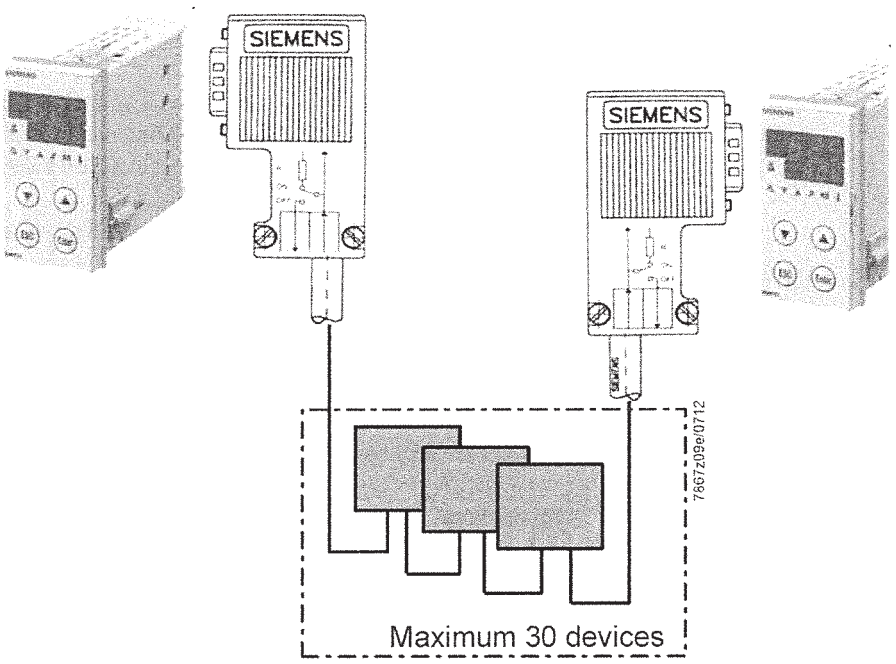

Figure 38: Bus terminator

Cable data

The cable length specifications relate to cable type A described below:

Surge impedance	135...165 Ω
Capacitance per unit length	<30 pf/m
Loop resistance	110 Ω/km
Cross-sectional area	>0.34 mm²

Preferably, a 9-pin D-Sub connector should be used for Profibus networks with RS-485 transmission technology. The pin assignments on the connector and the wiring specifications are listed at the end of this chapter.
Several manufacturers offer Profibus DP cables and connectors. Please consult the Profibus product catalog (www.profibus.com) for designations and reference addresses.

Attention!
When connecting the devices, make sure you do not mix up the data lines. You must use shielded data lines. The braided shield and the foil shield underneath it (where applicable) should be connected at both sides and with a good conductive connection to protective ground.
Additionally, where possible you must ensure that data lines are laid separately from all power cables.

As an example of an appropriate cable, we recommend the following from Siemens:

Simatic Net Profibus 6XV1
Order no.: 830-0AH10
* (UL) CMX 75 °C (Shielded) AWG 22 *

Data rate

With data rates of ≥1.5 Mbit/s, branching must be avoided during installation.

Note!
For additional installation information, please refer to the Profibus DP installation guidelines (order no. 2.111) from the PNO.

Address:
Profibus Nutzorganisation e.V.
Haid- und Neu-Straße 7
76131 Karlsruhe

Internet: www.profibus.com

Recommendation:
Please observe the installation information provided by the PNO, especially in cases where variable speed drives are being used simultaneously.

Wiring and bus termination

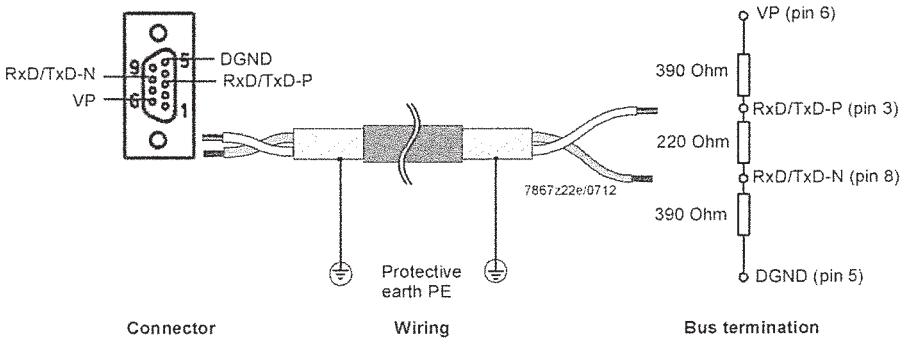

Figure 39: Wiring and bus termination

Profibus DP is designed for fast data exchange at field level. In this case, the central control devices (such as the PLC/PC) communicate with distributed field devices (such as I/Os, screen recorders, and controllers) via a fast serial connection. Data exchange with these distributed devices is usually cyclical.
The communication functions required for this are defined by basic Profibus DP functions in accordance with IEC 61158 and IEC 61784.

Basic functions

The central control device (master) reads input messages from the slaves cyclically and writes output messages to the slaves cyclically. The bus cycle time must be shorter than the program cycle time of the central PLC. As well as cyclical user data transfer, Profibus DP is able to carry out high-performance diagnostics and commissioning functions.

Technology transfer
- RS-485 twisted 2-wire line
- Baud rate of 9.6 kbit/s upto 12 Mbit/s

Bus access
- Master and slave devices, maximum 126 nodes on a bus (with repeater)

Communication
- Point-to-point (user data traffic)
- Cyclical master-slave user data traffic

Operation states
- Operate — Cyclical transfer of input and output data
- Clear — Inputs are read; outputs remain in a safe state
- Stop — Only master-master data transfer is possible

Synchronization
- Sync-Mode — Not supported by the RWF55
- Freeze-Mode — Not supported by the RWF55

Functionality
- Cyclical user data transfer between DP master and DP slave(s)
- Dynamic activation or deactivation of individual DP slaves
- Checking of DP slave configuration
- Address assignment for DP slaves via the bus
- Configuration of DP master via the bus
- Maximum 246 bytes of input/output data possible per DP slave

Protection functions

- Threshold monitoring for DP slaves
- Access protection for inputs/outputs of DP slaves
- Monitoring of user data traffic with adjustable monitoring timer for DP master

Device types

- DP master class 2, e.g., programming/configuration devices
- DP master class 1, e.g., central automation devices such as PLC, PC, etc.
- DP slave, e.g., devices with binary or analog inputs/outputs, controllers, recorders, etc.

Cyclical data traffic

Data traffic between the DP master and DP slaves is automatically processed by the DP master in a fixed, constantly recurring order. The user specifies the assignment of a DP slave to a DP master during bus system configuration. The DP slaves to be included in or excluded from cyclical user data traffic are also defined.
The data traffic between the DP master and DP slaves is divided into parameter setting, configuration, and data transfer phases. Before a DP slave is included in the data transfer phase, the DP master checks (in the parameter setting and configuration phase) whether the desired configuration that has been configured matches the actual device configuration.
As part of this check, the device type, format information, and length information as well as the number of inputs and outputs must match. As a result of this, the user is provided with reliable protection against parameter setting errors. As an addition to the user data transfer function that the DP master performs automatically, it is also possible to send new parameter setting data to the DP slaves if requested by the user.

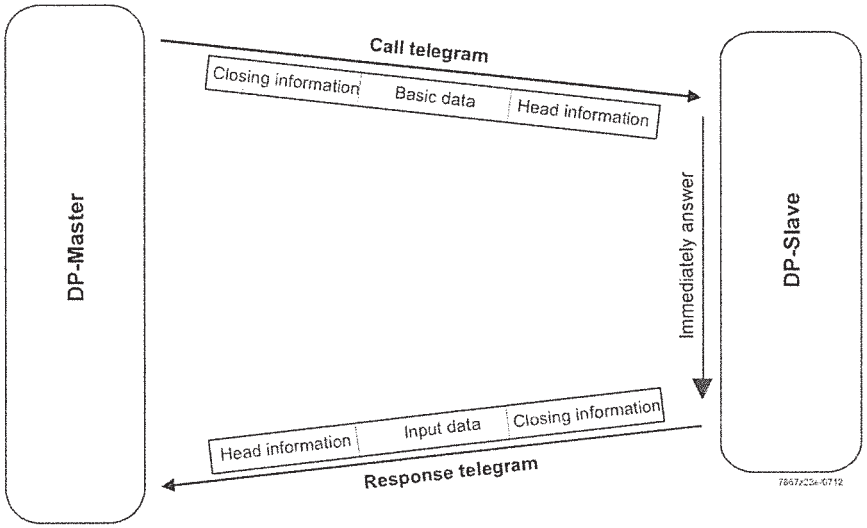

Figure 40: User data transfer with Profibus DP

12.2 Wiring

Assignment of 9-pole D-SUB jack

COM2 D-SUB jack		Pin: Signal on the device terminal strip 1	Description
6	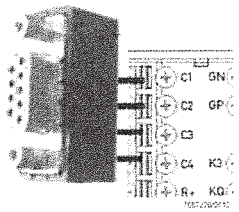	C1: VP	Power supply - plus
3		C2: RxD/TxD-P	Received data/transmission data - plus
8		C3: RxD/TxD-N	Received data/transmission data - minus
5		C4: DGND	Ground

Figure 41: COM2 D-SUB jack

12.3 Parameter list

Signal reference	Access	Data type	Parameter
X1	RO	Float	Analog input InP1
X2	RO	Float	Analog input InP2
SP1	R/W	Float	Setpoint 1
SP2 (dSP)	R/W	Float	Setpoint 2
---	RO	Word	Outputs and states
---	RO	Word	Binary signal and Hardware character
Pb1	R/W	Float	Proportional range 1
dt	R/W	Float	Derivative action time
rt	R/W	Float	Integral action time
REM	RO	Word	Status remote operation
X3	RO	Float	Analog input InP3
AL	R/W	Word	Limit value alarm
B1	RO	Float	Burner alarm
WR	RO	Float	Actual setpoint

Note!
The respective address ranges are given in the *.gsd file

13 What to do if ...

13.1 Alarm messages

Display	Cause	Remedy
9999 flashing 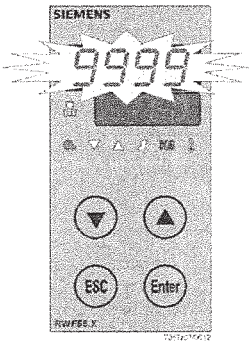	**Measured value exceeded limit** The measured value is too great, lies outside the measuring range, or the sensor is faulty (9999 flashing). --- **Measured value dropped below limit** The measured value is too small, lies outside the measuring range, or the sensor has a short-circuit (-1999 flashing).	* Check to see if sensor and connecting line are damaged or have a short-circuit ⇨ Reference! See chapter 4.3 *Assignment of pins* * Check to see if the correct sensor is selected or connected ⇨ Reference! See chapter 14.1.1 *Analog input* InP1 (actual value)
The yellow communication symbol (top left) flashes 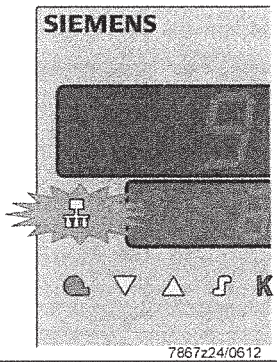	Interface communication via Profibus, Modbus or PC software ACS411 (USB) is active	No remedy required, normal RWF55 behavior.

13.2 Others

Display	Cause	Remedy
On the upper display, the decimal place to the right is lit 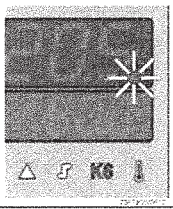	USB connection	Remove USB connection ⇨ Reference! See chapter 10 *PC software ACS411*

14 Technical data

14.1 Inputs

14.1.1 Analog input InP1 (actual value)

For resistance thermometers, thermal elements or standard signals with 2nd order digital filters (configurable).

Sampling time	250 ms

Resistance thermometers

Type	Measuring range	Measuring accuracy [a]	Impact of ambient temperature
Pt100; DIN EN 60751	-200...850 °C (-328...1562 °F)	≤0,05%	50 ppm/K
Pt1000; DIN EN 60751	-200...850 °C (-328...1562 °F)	≤0,05%	50 ppm/K
LG-Ni1000	-50...+160 °C (-58...320 °F)	≤0,05%	50 ppm/K
0...135 Ω		≤0,05%	50 ppm/K

[a] Accuracies relate to the maximum measuring range.

Line resistance	Max. 30 Ω per line with 3-wire circuit
Line balancing	Not required with 3-wire circuits. With 2-wire circuits, line balancing can be performed by making an actual value correction

Thermal elements

Type	Measuring range	Measuring accuracy [a]	Impact of ambient temperature
Fe-CuNi **J** DIN EN 60584	-200...+1200 °C (-328...+2192 °F)	≤0.25%	≤100 ppm/K
NiCr-Ni **K** DIN EN 60584	-200...+1372 °C (-328...+2502 °F)	≤0.25%	≤100 ppm/K
Cu-CuNi **T** DIN EN 60584	-200...+400 °C (-328...+752 °F)	≤0.25%	≤100 ppm/K
NiCrSi-NiSi **N** DIN EN 60584	-100...+1300 °C (-148...+2372 °F)	≤0.25%	≤100 ppm/K
Pt-RhPt **S** DIN EN 60584	-50...+1768 °C (-58...+3214 °F)	≤0.25%	≤100 ppm/K
Pt-RhPt **R** DIN EN 60584	-50...+1768 °C (-58...+3214 °F)	≤0.25%	≤100 ppm/K
Pt-RhPt **B** DIN EN 60584	0...1820 °C (32...3308 °F)	≤0.25%	≤100 ppm/K

[a] Accuracies relate to the maximum measuring range.

Cold-function temperature	Internal

Standard signals

Measuring range	Measuring accuracy [a]	Impact of ambient temperature
Voltage DC 0...5 V Input resistance R_E >2 MΩ	≤0.2%	200 ppm/K
Voltage DC 0...10 V Input resistance R_E >2 MΩ	≤0.1%	100 ppm/K
Voltage DC 1...5 V Input resistance R_E >2 MΩ	≤0.2%	200 ppm/K
Current 0...20 mA Voltage drop ≤2 V	≤0.1%	100 ppm/K
Current 4...20 mA Voltage drop ≤2 V	≤0.1%	100 ppm/K

[a] Accuracies relate to the maximum measuring range.

14.1.2 Analog input InP2 (external setpoint, setpoint shifting)

Resistance measurement 0...1 kΩ or standard signals without linearization.

Sampling time	750 ms

Resistance thermometer

Resistance (2-wire circuit)	0...1 kΩ linear ≤0.05% 50 ppm/K

Standard signals

Measuring range	Measuring accuracy [a]	Impact of ambient temperature
Voltage DC 0...5 V Input resistance RE >2 MΩ	≤0.2%	200 ppm/K
Voltage DC 0...10 V Input resistance RE >2 MΩ	≤0.1%	100 ppm/K
Voltage DC 1...5 V Input resistance RE >2 MΩ	≤0.2%	200 ppm/K
Current 0...20 mA Voltage drop ≤2 V	≤0.1%	100 ppm/K
Current 4...20 mA Voltage drop ≤2 V	≤0.1%	100 ppm/K

[a] Accuracies relate to the maximum measuring range.

14.1.3 Analog input InP3 (outside temperature)

For resistance thermometers in 2-wire circuit, with fixed filter time constant.

Sampling time	6 s

Resistance thermometer

Type	Measuring range	Measuring accuracy [a]	Impact of ambient temperature
Pt1000 DIN EN 60751	-200...+850 °C (-328...+1562 °F)	≤0.05%	50 ppm/K
LG-Ni1000	-50...+160 °C (-58...+320 °F)	≤0.05%	50 ppm/K

[a] Accuracies relate to the maximum measuring range.

14.1.4 Binary input D1

Potentialfree contact for the following functions, depending on the configuration:

- No function
- Setpoint shifting
- Setpoint changeover
- Alarm input

14.1.5 Binary input D2

Potentialfree contact for operating mode changeover:

Burner modulating, if contacts D2 and DG are open	LED for *operating mode 2-stage*, **does not** light up on the front
Burner 2-stage, if contacts D2 and DG are closed	LED for *operating mode, 2-stage*, **lights up** on the front

14.2 Monitoring the measuring circuit

In the event of error, the outputs assume defined states (configurable).

Measuring transducer	Measured value crossed limit	Sensor/line has short-circuit	Sensor/line interrupted
Resistance thermometer	●	●	●
Thermal elements	●	---	●
Voltage			
DC 1...5 V	●	●	●
DC 0...5 V	(●)	---	---
DC 0...10 V	(●)	---	---
Current			
DC 4...20 mA	●	●	●
DC 0...20 mA	(●)	---	---

● = detected

(●) = detected only if measuring range is exceeded

--- = not detected

⇨ Reference!
See chapter 13.1 *Alarm messages.*

14.3 Controller outputs OutP

Galvanic separation between supply voltage and analog inputs.

⇨ Reference!
See chapter 4.2 *Galvanic separation*

Relay K1 (NO contact) **1P, 1N** (burner release)	
Contact rating	Max. 2 A at AC 240 V at cosφ >0.6
Contact life	250,000 switching cycles at high-fire
Contact protection	Varistor
Power supply for transducer G+, G-	DC 24 V ±10%/max. 30 mA, short-circuit-proof

The following relay data are those specified by the supplier.

Relay K2, KQ (controlling element OPEN)	
Contact rating	Max. 2 A at AC 240 V and cosφ >0.6
Contact life	200,000 switching cycles at high-fire
Contact protection	RC combination
Relay K3, KQ (controlling element CLOSE)	
Contact rating	Max. 2 A at AC 240 V at cosφ >0.6
Contact life	200,000 switching cycles at high-fire
Contact protection	RC combination
Relay K6 (NO contact), **6P, 6N** (multifunctional relay)	
Contact rating	Max. 2 A at AC 240 V at cosφ >0.6
Contact life	200,000 switching cycles at high-fire
Contact protection	Varistor

Relay data are those specified by the supplier.

Analog output A+, A-	
Voltage	DC 0...10 V short-circuit-proof
Load resistance	R_{Last} ≥500 Ω
Accuracy	≤0.25%, ±50 ppm/K
Current	0...20 mA/4...20 mA
Load resistance	R_{Last} ≤500 Ω
Accuracy	≤0.25%, ±50 ppm/K

Interface RS-485

Baudrate	4800 Baud 9600 Baud 19200 Baud 38400 Baud
Protocol	Modbus
Unit address	1...99

Profibus interface

Only present with RWF55.6!

14.4 Controller

Type of controller	3-position controller and continuous controller
Controller structure	P/PI/PD/PID
Sampling time	250 ms

14.5 Electrical data

Power supply (switching network section)	AC 110...240 V +10/-15% 48...63 Hz
Electrical safety	To DIN EN 60730, part 1 Overvoltage category III Degree of contamination 2
Safety class I	With internal separation from SELV electrical circuits
SELV voltage	Max. 30 V
Power consumption	Max. 20 VA
Data backup	EEPROM
Electrical connection	At the rear via screw terminals
- Cross-sectional area - Stranded wire with	0.25...1.5 mm² fine-wired - Ferrules to DIN 46228 - Pin-type cable socket to DIN 46231 - Crimp-type cable socket in fork-form for M3 thread (dimensions to DIN 46237)
With UL applications	Use of the cable lug or ferrules to UL486A-B (UL listed or recognized)
Tightening torque	0.5 Nm
Electromagnetic compatibility	DIN EN 61326-1
Emitted interference	Class B
Immunity	Meeting industrial requirements

14.6 Housing

Type of housing	Made of Makrolon for control panel mounting to DIN IEC 61554 (use in indoor)
Color	Light-grey RAL7035
Mounting depth	122 mm
Mounting position	Optional
Degree of protection	To DIN EN 60529 Front side IP66 Rear IP20 To UL50E and to NEMA 250 Front side type 5
Weight - RWF55.5 - RWF55.6	(Fully equipped) Approx. 329 g Approx. 342 g

14.7 Environmental conditions

Storage	DIN IEC 60721-3-1
Climatic conditions	Class 1K3
Mechanical conditions	Class 1M2
Temperature range	-40...70 °C
Humidity	<95% r.h.
Transport	DIN IEC 60721-3-2
Climatic conditions	Class 2K2
Mechanical conditions	Class 2M2
Temperature range	-40...70 °C
Humidity	<95% r.h.
Operation	DIN IEC 60721-3-3
Climatic conditions	Class 3K3
Mechanical conditions	Class 3M3
Temperature range	-20...50°C
Humidity	<95% r.h.
Installation altitude	Max. 2000 m above sea level

Attention!
Condensation, formation of ice and ingress of water are not permitted!

14.8 Segment display

Height of numerals	
- Upper display	10 mm
- Lower display	7 mm
Color	
- Upper display	Red
- Lower display	Green
Digits	4 (including 0, 1 or 2 decimal places, configurable)
Range of display	-1999...9999

14.9 Standards and certificates

Applied directives:

- Low-voltage directive 2014/35/EC
- Electromagnetic compatibility 2014/30/EC

Compliance with the regulations of the applied directives is verified by the adherence to the following standards / regulations:

- Temperature control devices and temperature limiters for heat generating systems DIN EN 14597
- Automatic electrical controls for household and similar use Part 1: General requirements DIN EN 60730-1
- Automatic electrical controls for household and similar use Part 2-9: Particular requirements for temperature sensing controls DIN EN 60730-2-9
- Electrical equipment for measurement, control and laboratory use - EMC requirements Part 1: General requirements DIN EN 61326-1

The relevant valid edition of the standards can be found in the declaration of conformity!

EAC Conformity mark (Eurasian Conformity mark)

ISO 9001:2008
ISO 14001:2004
OHSAS 18001:2007

China RoHS
Hazardous substances table:
http://www.siemens.com/download?A6V10883536

15 Key

A	Switch-on point for high-fire when response threshold (q) is reached
ACrA	Response by Out of Range
Adr	Device address Modbus
AF	Alarm function
AL	Limit value
At1	Outside temperature 1
At2	Outside temperature 2
B	Switch-off point for burner
bdrt	Baudrate
bin1	Binary input 1
bin2	Binary input 2
binF	Binary input
CACt	Operating action
Cntr	Controller
CodE	Level lockout
ConF	Configuration
CtYP	Controller type
db	Dead band
dECP	Decimal point
dF1	Filter time constant
dF2	Filter time constant
dF3	Filter time constant
dFt	Data format
diSL	Lower display
diSP	Display
diSU	Upper display
dSP	Setpoint
dt	Derivative action time
dtt	Remote Detection Timer
End	End value
FnC2	Function
FnC3	Function
FnCt	Function
Ht1	Boiler temperature 1
Ht2	Boiler temperature 2
HYS1	Switch-on threshold heating controller
HYS2	Switch-off threshold heating controller
HYS3	Switch-off threshold heating controller
HYS4	Switch-on threshold cooling controller
HYS5	Switch-off threshold cooling controller
HYS6	Switch-off threshold cooling controller
HYSt	Switching difference
InP	Analog input
InP1	Analog input 1 (actual value)
InP2	Analog input 2 (external setpoint or setpoint shifting)
InP3	Analog input 3 (outside temperature)
IntF	Interface
OFF1	Correction of measured value
OFF2	Correction of measured value
OFF3	Correction of measured value
oLHi	Upper working range limit
oLLo	Lower working range limit
OPnt	Zero point
OPr	User
OutP	Control outputs

PArA	Parameter
Pb	Proportional range
Pb1	Proportional range 1
q	Response threshold
qeff	Sum of all integrals
rAFC	Thermal shock protection
rAL	Limit value
rASL	Ramp slope
rOut	Value when out of range
rt	Integral action time
SCH1	End of display
SCH2	End of display
SCL1	Start of display
SCL2	Start of display
SEn1	Sensor type
SEn2	Sensor type
SEn3	Sensor type
SiGn	Signal type
SP1	Setpoint 1
SP2	Setpoint 2
SPH	Setpoint limitation end
SPL	Setpoint limitation start
t	Time
t1	Power ON (startup at actual value)
t2	Actual value of ramp stop outside tolerance band
t3	Actual value returned to tolerance band
t4	Setpoint reached, thermal shock protection (TSS) no longer active
toLP	Tolerance band of ramp
tout	Timeout
tt	Running time of controlling element
Unit	Unit of temperature
W	Setpoint
Y	Angular positioning

16 List of figures

Figure 1: Block structure 12
Figure 2: Dimensions of RWF55 14
Figure 3: Mounting in a panel cutout 15
Figure 4: Test voltages 18
Figure 5: Assignment of terminals 19
Figure 6: Control sequence of heating controller 22
Figure 7: Control sequence of cooling controller 22
Figure 8: Control sequence of modulating burner, 3-position output 23
Figure 9: Control sequence of modulating burner, analog output 24
Figure 10: Control sequence of 2-stage burner, 3-position output 25
Figure 11: Control sequence of 2-stage burner, analog output 26
Figure 12: Setpoint changeover or setpoint shift 29
Figure 13: Setpoint changeover SP1 / external setpoint 30
Figure 14: Setpoint shifting analog / binary 31
Figure 15: External setpoint, setpoint shifting binary via dSP 32
Figure 16: Heating curve slope 33
Figure 17: Control sequence response threshold (q) 34
Figure 18: Control sequence *Cold start of plant* 35
Figure 19: Thermal shock protection (TSS) 37
Figure 20: Meaning of display and buttons 38
Figure 21: Display start 40
Figure 22: Basic display 40
Figure 23: Display of self-setting function 44
Figure 24: Display of software version 45
Figure 25: Display segment test 45
Figure 26: Parameterization 46
Figure 27: Configure 49
Figure 28: Alarm function Ik1...Ik6 56
Figure 29: Alarm function Ik7 and Ik8 56
Figure 30: Self-setting function in high-fire operation 62
Figure 31: Great difference between actual value and setpoint 63
Figure 32: Small control deviation 63
Figure 33: Pb too small 64
Figure 34: Pb too large 64
Figure 35: rt, dt too small 64

Figure 36: rt, dt too large 64
Figure 37: Optimum adjustment 64
Figure 38: Bus terminator 73
Figure 39: Wiring and bus termination 75
Figure 40: User data transfer with Profibus DP 76
Figure 41: COM2 D-SUB jack 77

Index

A
ACS411
Changing the parameters....65
Installation....67
Languages....66
License and liability regulations....66
Others....67
PC software ACS411....65
Place of installation....66
Prerequisites for hardware....66
Procurement of PC software ACS411....66
Safety notes....65
Setting the correct system parameters....65
Alarm function AF
Limit value AL relative to setpoint....56
C
Changing setpoint
SP2....41
Changing the setpoint
SP1....41
Configuration
Alarm function AF....56
Analog input InP1....50
Analog input InP2....52
Analog input InP3....53
Analog output....58
Binary functions binF....59
Binary output....58
Control outputs OutP....58
Controller Cntr....54
Display diSP....60
Interface IntF....61
Thermal shock protection (TSS) rAFC....55
Configuration ConF....49
D
Description
Interface....11
Option....11
E
Electrical connection
Connection of external components....17
Electrical connections....17
Assignment of terminals....19
Fusing....17
Galvanic separation....18
Incorrect use....17
Installation notes....17
Safety regulations....17
Screw terminals....17
Suppression of interference....17
I
Identification of product no....13
Location....13
Product nos....13
Scope of delivery....13
Type field....13
Installation....14
Cleaning the front....16
Dimensions....14
Installation site and climatic conditions....14
Mounting the controller in a panel cutout....15
Removing the controller from the panel cutout....16
Side-by-side mounting....15
Introduction....8
Block structure....12
Control....11
Cooling controller....11
Correct use....9
Description....11
General notes....8
Mounting....11
Notification symbols....10
Presentation....10
Qualified personnel....9
Safety notes....9
Typographical conventions....9
Use in heating plants....11
Warning symbols....9
K
Key....88
M
Modbus interface....68
Configuration level....70
Device data....71
Device state....71
Parameter level....69
Remote operation....70
User level....68
O
Operating mode
Output....24
Operating modes....22
2-stage burner, 3-position output....25
2-stage burner, analog output....26
Burner shutdown....27
Cold start of plant....35
Cooling controller....22, 24, 26, 34, 36
External setpoint, setpoint shifting binary via dSP....32
Heating controller....22, 35
Heating curve....33
High-fire operation....23
Interlocking....35, 37
Low-fire operation....22
Modulating burner, 3-position output....23

Modulating burner, analog output 24
Operating mode changeover 23
Predefined setpoint 28
Response threshold (q) 34
Setpoint changeover SP1 / external setpoint via InP2 30
Setpoint changeover SP1 / SP2 or setpoint shift analog via InP2 29
Setpoint shifting SP1 analog via InP2 / binary via dSP 31
Thermal shock protection 37
Thermostat function 22
Weather-compensated setpoint shifting 33
Operation 38
3-position controller 42
Basic display 40
Basic display 38
Cancel 44
Changing the setpoints 41
Display of software version 45
Flashing actual value display 39
Initialization 38
Manual control 39
Manual control, 2-stage burner 43
Manual control, modulating burner 42
Meaning of display and buttons 38
Modulating controller 42
Parameter display 38
Segment test 45
Self-setting function 38
Start 44
Starting the self-setting function 44
Timeout 41
User level 41
P
Parameterization
Display of controller parameters 47
Parameterization PArA 46
PC software ACS411
Measuring accuracy 67
Operating systems 66
Powering the controller via the USB port 67
Use of USB port 67
Using the HUB 67
PC-Software ACS411
Switching off 67
Profibus-DP interface 72
Parameter list 77
RS-485 Technology transfer 72
Wiring 77
R
RS-485 Technology transfer
Basic features 72
Basic functions 75
Bus terminator 73
Cable data 74
Cable length 72
Cyclical data traffic 76
Data rate 74
Structure 72
Wiring and bus termination 75
S
Self-setting function 62
2 procedures 63
Checking the controller parameters 64
Conditions 63
Self-setting function in high-fire operation 62
T
Technical data 79
Binary input D2 82
Controller 85
Controller outputs OutP 84
Electrical data 85
Environmental conditions 86
Housing 85
Inputs 79
Monitoring the measuring circuit 83
Resistance thermometers 79
Segment display 86
Standard signals 80
Standards and certificates 87
Technical Data
Analog input InP1 79
Analog input InP2 81
Analog input InP3 81
Binary input D1 81
Interface RS-485 84
Profibus interface 84
Resistance thermometer 81
Standard signals 81
Thermal elements 79
W
What to do if... 78
Alarm messages 78
Others 78
Wiring
Assignment of 9-pole D-Sub jack 77

Siemens AG Infrastructure & Cities Sector Building Technologies Division
Berliner Ring 23
D-76437 Rastatt
Tel. +49 7222 598 279
Fax +49 7222 598 269
www.siemens.com

© 2013 Siemens AG Infrastructure & Cities Sector
Building Technologies Division
Subject to change!

SIEMENS

Technical Specification Sheet
Document No. 149-919
March 23, 2007

Immersion Well Temperature Sensors

Description

The Immersion Well Temperature Sensors monitor and transmit changes in temperature to the building control system. Specific devices within the range are compatible with whatever North American manufactured building automation system you may be installing. They thread into a well in a pipe and sense the medium temperature in the pipe. All sensors incorporate precision temperature sensing elements to accurately and reliably measure temperature.

Features

- Variety of sensing elements
- Suitable for hot or chilled medium
- Responsive to temperature change
- Accurate and reliable indication of temperature
- Familiar installation requires no special tools

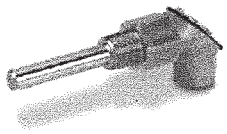

Figure 1. Immersion Well Temperature Sensor.

Specifications

Temperature Range	Controller dependent
Output Signals	Changing resistance
Sensing Element Type	NTC Thermistor, Pt RTD, or Ni RTD
Accuracy	
NTC Thermistors, mid-range	±1.0°F (±0.5°C)
Pt RTD and Ni RTD, mid-range	±0.75°F (±0.4°C)
Installation	
Wiring	2-conductor: 18 to 22 AWG twisted pair (per code requirements)
Calibration Adjustments	NTC: None required RTD: Adjust for increased temperature offset (a constant) as required, related to added resistance of the field wiring
Threads into Immersion Well	1/2-inch – 14 NPSME
Conduit Pipe Threads	1/2-inch – 14 NPSMI
Housing Material	Cast zinc

Compatibility Table

Automation System	Element Type
AET	10K Type III
Alerton	10K Type II or 3K
American Auto-Matrix	10K Type III
Anderson Cornelius	2.252K
Andover	10K Type III
ASI	3K
ATS	3K
Automated Logic	10K Type II
Carrier	10K Type II 10K Type III
Circon	10K Type III
Delta Controls	10K Type III
Distech Energie	10K Type II
Honeywell	20K or 1K Platinum (385)
Invensys	10K Type III or 1K Platinum (385)
JCI	1K Nickel (JCI) or 10K Type II
KMC	10K Type III or 10K Type II
Reliable Controls	10K Type III
Richards Zeta	10K Type III
Schneider General	3K
Solidyne	10K Type II
T&A	1.8K
TAC/CSI	10K Type II
Trane	10K Type II or 1K Platinum (385)
Triangle Microsystems	10K Type II
Walker	3K
York	10K Type III

Accessories Ordering Information

Description		Part Number
Immersion Wells	2.5 in. (64 mm)	AQE2000.005
	4 in. (100 mm)	AQE2000.010
	6 in. (153 mm)	AQE2000.015
Immersion Well Repair Kit	PT 1000 Ohm (385)	AQE2012
	Ni 1K Ohm, Siemens	AQE2020
	Ni 1000 Ohm, JCI	AQE2021
	NTC 10K Ohm Type II	AQE2030
	NTC 10K Ohm Type III	AQE2032
	NTC 2.252K Ohm	AQE2033
	NTC 3K Ohm	AQE2034
	NTC 20K Ohm Type II	AQE2036
	NTC 1.8K Ohm	AQE2037

Repair kits have components to fill any of the three Immersion Wells offered.

Immersion Well Temperature Sensor Product Numbers

Product Number	Sensing Element
QAE2037.XXX	1.8K Ω NTC
QAE2033.XXX	2.252K Ω NTC
QAE2034.XXX	3.0K Ω NTC
QAE2030.XXX	10K Ω NTC Type II
QAE2032.XXX	10K Ω NTC Type III
QAE2036.XXX	20K Ω NTC Type II
QAE2012.XXX	1K Ω Pt (385α)
QAE2020.XXX	1K Ω Ni Siemens
QAE2021.XXX	1K Ω Ni JCI
XXX	**Insertion Length in Inches (mm)**
.005	2.5 (63.5)
.010	4 (101.6)
.015	6 (152.4)

Product Ordering Information

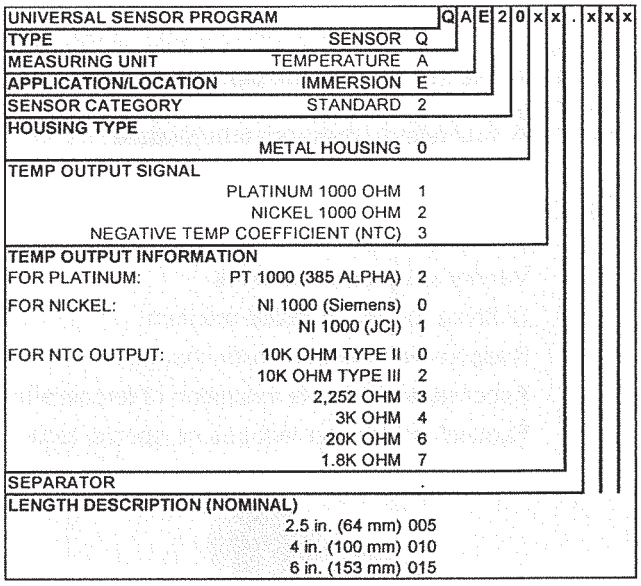

Part Number Example:
QAE2032.010=Pipe Temperature Sensor, Immersion Type, NTC, 10K Type III Sensing Element, 4-inch Probe.

Information in this document is based on specifications believed correct at the time of publication. The right is reserved to make changes as design improvements are introduced. Products or company names mentioned herein may be the trademarks of their respective owners.
© 2007 Siemens Building Technologies, Inc.

RL 28-50M RTD									
Parameters				Parameter Name	Value Range	Factory Setting	Your Setting	Notes	Page Number
ConF	Inp	Inp1	SEn1	Analog input 1 sensor type	1...19 →	1	6	1 = Pt-100 3-wire, 2 = Pt100 2-wire, 3 = Pt1000 3-wire, 4 = Pt1000 2-wire, 5 = Ni1000 3-wire, 6 = Ni1000 2-wire, 7 = 0-135 Ohm, 8 = T, 9 = J, 10 = K, 11 = N, 12 = S, 13 = R, 14 = B, 15 = 0-20 mA, 16 = 4-20 mA, 17 = DC 0-10 V, 18 = DC 0-5 V, 19 = DC 1-5 V	50
			OFF1	Analog input 1 correction (offset)	-1999...9999	0			
			SCL1	Analog input 1 scale low level	-1999...9999	0			
			SCH1	Analog input 1 scale high level	-1999...9999	100			
			dF1	Analog input 1 filter time constant	0.0...100.0 sec	0.6	1		51
			Unit	Temperature unit	1, 2	1	2	1 = Celsius, 2 = Fahrenheit	
		Inp2	FnC2	Analog input 2 function	0, 1, 2, 3	0	1	0 = no function, 1 = external setpoint, 2 = setpoint shifting, 3 = angular position feedback	52
			SEn2	Analog input 2 sensor type	1, 2, 3, 4, 5, 6	1	3	1 = 0-20mA, 2 = 4-20 mA, 3 = DC 0-10 V, 4 = DC 0-5 V, 5 = DC 0-1 V, 6 = resistance potentiometer (only if FnC2 ≠ 0)	
			OFF2	Analog input 2 correction (offset)	-1999...9999	0		Only if FnC2 ≠ 0	
			SCL2	Analog input 2 scale low level	-1999...9999	0	100	Only if FnC2 ≠ 0	
			SCH2	Analog input 2 scale high level	-1999...9999	100	200	Only if FnC2 ≠ 0	
			dF2	Analog input 2 filter time constant	0.0...100.0 sec	2		Only if FnC2 ≠ 0	
		Inp3	SEn3	Analog input 3 sensor type	0, 1, 2	0		0 = switched off, 1 = Pt1000 2-wire, 3 = LG-Ni1000 2-wire	53
			FnC3	Analog input 3 function	0, 1	0		0 = no function, 1 = weather-compensated setpoint (Only if SEn3 ≠ 0)	
			OFF3	Analog input 3 correction (offset)	-1999...1999	0		Only if SEn3 ≠ 0	
			dF3	Analog input 3 filter time constant	0.0...1500 sec	1278		Only if SEn3 ≠ 0	
	Cntr		CtYP	Controller type	1, 2	1		1 = 3-position, 2 = modulating	54
			CACt	Operating action	0, 1	1		0 = cooling, 1 = heating	
			SPL	Setpoint low limit	-1999...9999	0	100		
			SPH	Setpoint high limit	-1999...9999	100	200		
			oLLo	Lower working range limit	-1999...9999	-1999			
			oLHi	Upper working range limit	-1999...9999	9999			
	rAFC		FnCt	Thermal shock function	0, 1, 2	0		0 = Switched off, 1 = Kelvin/min, 2 = Kelvin/hour	37, 55
			rASL	Ramp slope	0.0...999.9	0		Only if FnCt ≠ 0	
			toLP	Tolerance band ramp	2* |HYS1| ...9999	0		Only if FnCt ≠ 0	
			rAL	Ramp limit value	0...250	0		Only if FnCt ≠ 0	
	AF		FnCt	Alarm limit function	0...12	0		0 = no function, 1 = Ik1 input 1, 2 = Ik2 input 1, 3 = Ik3 input 1, 4 = Ik4 input 1, 5 = Ik5 input 1, 6 = Ik6 input 1, 7 = Ik7 input 1, 8 = Ik8 input 1, 9 = Ik7 input 2, 10 = Ik8 input 2, 11 = Ik7 input 3, 12 = Ik8 input 3	56-57
			AL	Alarm limit value	-1999...9999	0		Only if FnCt ≠ 0	
			HYSt	Switching difference (hysteresis)	0...9999	1		Only if FnCt ≠ 0	
			ACrA	Out of range response	0, 1	0		0 = switched off, 1 = on (Only if FnCt ≠ 0)	
	OutP		FnCt	Analog output function	0, 1, 2, 3, 4	4		0 = no function, 1 = analog input 1, 2 = analog input 2, 3 = analog input 3, 4 = controller angular position	58
			SiGn	Analog output signal type	0, 1, 2	0	1	0 = 0-20 mA, 1 = 4-20mA, 2 = DC 0-10 V	
			r0ut	Value when out of range	0...101	0			
			0Pnt	Re-transmit scale low	-1999...9999	0			
			End	Re-transmit scale high	-1999...9999	100			
	binF		bin 1	Binary input 1 function	0, 1, 2, 3	0	1	0 = no function, 1 = setpoint changeover, 2 = setpoint shift, 3 = alarm input	59
			bin 2	Binary input 2	4	4		4 = operating mode changeover	
	diSP		diSU	Upper display	0, 1, 2, 3, 4, 5, 6, 7	1		0 = disconnected, 1 = analog input 1, 2 = analog input 2, 3 = analog input 3, 4 = controller angular position, 6 = setpoint, 7 = thermal shock end value	60
			diSL	Lower display	0, 1, 2, 3, 4, 5, 6, 7	6		0 = disconnected, 1 = analog input 1, 2 = analog input 2, 3 = analog input 3, 4 = controller angular position, 6 = setpoint, 7 = thermal shock end value	
			tout	Timeout	0...255 sec	180			
			dECP	Decimal places	0, 1, 2	0		0 = no decimal place, 1 = on decimal, 2 = two decimals	
			CodE	Locking of levels	0, 1, 2, 3	0		0 = no lockout, 1 = config level, 2 = parameter and config level, 3 = keyboard lockout	
	IntF		bdrt	Baud rate	0, 1, 2, 3	1		0 = 4800 Baud, 1 = 9600 Baud, 2 = 19200 Baud, 3 = 38400 Baud	61
			Adr	Modbus address	0...254	1			
			dP	Proibus address	0...125	125		Only RWF55.6	
			dtt	Remote detection timer	0...7200 sec	30			
Opr			SP1	Setpoint 1	SPL...SPH	60	180		41
			SP2	Setpoint 2	SPL...SPH	0		Only if bin1 = 1	
			dSP	Setpoint	SPL...SPH	0		Only if bin1 = 2	
			InP1	Analog Input 1	N/A	-	-	Cannot be edited here (just a display)	
			InP2	Analog Input 2	N/A	-	-	Cannot be edited here (just a display)	
			InP3	Analog Input 3	N/A	-	-	Cannot be edited here (just a display)	
			SPE	External setpoint	N/A	-	-	Cannot be edited here (just a display)	
			Y	Angular positioning	N/A	-	-	Cannot be edited here (just a display)	
PArA			Pb1	Proportional band	1...9999	10			47
			dt	Derivative time	0...9999 sec	80			
			rt	Integral time	0...9999 sec	350			
			db	Dead band	0.0...999.9	1		Only if CtYP = 1	
			tt	Controlling element running time	10...3000 sec	15		Only if CtYP = 1	
			HYS1	Switch-on threshold	-1999...0.0	-5		Only if CACt = 1	
			HYS2	Switch-off threshold (stage II)	0.0...HYS3	3		Only if CACt = 1	
			HYS3	Switch-off threshold	0.0...9999	5		Only if CACt = 1	
			HYS4	Switch-off threshold	0.0...9999	5		Only if CACt = 0	
			HYS5	Switch-off threshold (stage II)	HYS6...0.0	-3		Only if CACt = 0	
			HYS6	Switch-off threshold	-1999...0.0	-5		Only if CACt = 0	
			q	Response threshold	0.0...999.9	0			34
			At1	Outside temp. curve point 1	-40...120	-10		Only if FnC3 = 1	48
			Ht1	Boiler temp. curve point 1	SPL...SPH	60		Only if FnC3 = 1	
			At2	Outside temp. curve point 1	-40...120	20		Only if FnC3 = 1	
			Ht2	Boiler temp. curve point 1	SPL...SPH	50		Only if FnC3 = 1	

15

Mécanique Nordique
Plumbing
Heating
Ventillation
mecanique.nordique@hotmail.com
1255 Rue J.A.Bombardier Lévis QC G7A 2P4
Tél : (418) 496-1109 Fax : (418) 496-3803

REVIEWED BY CONTRACTOR
Kudlik Construction Ltd.
NAME: Sandra Rousseau P.Eng
DATE: Jun 04, 2018

IQUALUIT WWTP UPGRADES

DRAWING FOR APPROVAL

ENGINEER: **NUNAMI STANTEC LIMITED**

DRAWING #: AD-015

Section	: 23 25 00
Article	: 2.1 ,2.3, 2.4, 2.5, 2.6, 2.7 ,2.8, 2.9
Plans	: M-602
Application	: HVAC WATER TREAMENT SYSTEMS
Brand	:
Model	:
Revised #	:
Supplyer	: SPECIFIED THECHNICAL SALES LTD
Date	: **02/06/2018**
By	: Martin Boucher

STANTEC PROJECT #: 110126045
SUBMITTAL # AD-015

This review by Stantec is for general conformance with the design concept of Stantec's design of the:
☐ Architectural ☐ Electrical
☐ Structural ☐ Other
☑ Mechanical

component(s) only and does not mean that Stantec has verified or approves the shop drawing(s). The Contractor remains solely responsible for the shop drawing(s) and this review by Stantec does not relieve the Contractor of the Contractor's responsibility for errors or omissions in the shop drawing(s) or for meeting all requirements of the contract documents. This review does not mean that Stantec approves the detailed design inherent in the shop drawing, responsibility for which shall remain with the Contractor submitting same, nor does this review mean that Stantec accepts any deviation of the shop drawing(s) from the contract documents. The Contractor is responsible for confirming all dimensions and correlating them at the job site, for all construction means, methods and techniques, and for coordination of construction work of all trades, including coordination of all shop drawings.

Stantec

☑ REVIEWED
☐ REVIEWED, AS NOTED
☐ REVISE AND RESUBMIT
☐ NOT REVIEWED

DATE 2018-06-05
BY Brendan Zrum, P.Eng

HVAC WATER TREAMENT SPEC 23 25 000

Water Technologies & Solutions
fact sheet

Ferroquest* FQ7103

neutral pH iron cleaner

description and use

- Removes rust, oil-based coating, organic debris
- Passivates steel surfaces
- Non-corrosive to base metal
- Safe in multimetal systems

description and use

Ferroquest* FQ7103 is a neutral pH cleaner which removes iron deposits, oil-based coatings, and organic debris from metal surfaces. Use of Ferroquest FQ7103 in new systems establishes system cleanliness and protection as the first step toward process efficiency and equipment longevity.

treatment and feeding requirements

Recirculate a 1% Ferroquest FQ7103 solution throughout the system for a minimum of 72 hours. After cleanout, rinse for 24 hours with fresh water, drain, and initiate system treatment. Ferroquest FQ7103 is best fed neat (undiluted) from the storage tank into the system. It can be introduced to the system by means of a chemical pump, bypass feeder or an inductor feeder.

general properties

Physical properties of Ferroquest FQ7103 are shown on the Material Safety Data Sheet, a copy of which is available upon request.

packaging information

Ferroquest FQ7103 is a liquid blend available in a variety of containers and delivery methods. Contact your SUEZ representative for details.

storage and handling

Protect from freezing. If this product is frozen during shipment or storage, slight mixing may be required to ensure homogeneity.

safety precautions

A Material Safety Data Sheet containing detailed information about this product is available upon request.

Find a contact near you by visiting www.suezwatertechnologies.com and clicking on "Contact Us."

*Trademark of SUEZ; may be registered in one or more countries.
©2017 SUEZ. All rights reserved.

Water Technologies & Solutions
fact sheet

CorrShield* MD4102

closed system corrosion inhibitor

- Excellent corrosion protection
- Low toxicity
- Highly buffered
- Easy to apply and control
- Compatible with most corrosion inhibitors

description and use

CorrShield MD4102 is a highly buffered, molybdate based corrosion inhibitor for use in multi-metal closed recirculating water systems that are subjected to air ingress contamination and/or trace acidic contaminants. This product also contains a scale inhibitor to retard the formation of objectionable deposits on high temperature heat exchange surfaces.

CorrShield MD4102 has a high buffering capacity which will maintain the pH of a closed water system in the desirable alkaline pH range, even in the presence of air ingress and/or trace acidic contaminants. Complete protection is provided against corrosion for ferrous and non-ferrous metals in both chilled and hot water heating systems.

treatment and feeding requirements

Maintain a molybdenum residual in the system as specified by your SUEZ representative. CorrShield MD4102 may be added full strength directly to the closed system by means of a by-pass feeder or chemical pump of standard construction. Inject chemical to suction side of recirculating pump or at any convenient location where good mixing is assured.

general properties

Physical properties of CorrShield MD4102 are shown on the Material safety Data Sheet (MSDS), a copy of which is available upon request.

packaging information

CorrShield MD4102 is available in a variety of containers and delivery methods. Contact your SUEZ representative for details.

storage

The product should be stored at moderate temperatures and protected from freezing. If frozen, thaw completely and mix thoroughly prior to use.

safety precautions

An MSDS containing detailed information about this product is available upon request.

Find a contact near you by visiting www.suezwatertechnologies.com and clicking on "Contact Us."

*Trademark of SUEZ; may be registered in one or more countries.
©2017 SUEZ. All rights reserved.

#214, 3750 46th Ave. SE Calgary AB T2B OL1
Tel (403) 253-2881
Fax (403) 253-7442
www.specified.ca

JOB: ***CONTACTOR:*** ***DATE:***

SYSTEM: ***TEST KIT USE:*** ***VOLUME:***

FQ7103 CLOSED SYSTEM CLEANING PROCEDURE

PART 1 - Add FQ7103 Cleaner (*Dosages:* 1L FQ7103 per every 100 L system volume)

1. Fill system with domestic water and establish circulation. Heat the system to maximum 60 degrees Celsius if possible.
2. After 2 hours of circulation, flush dirt legs until no solids are visible, while refilling to maintain the system pressure and circulation.
3. Dosage of closed loop system pipe cleaner **FQ7103** should now be added to the system via the pot feeder or pump, with the quantity determined by the system volume. Typical dosage of **1%** of total system volume is adequate for new installations.
4. Allow solution to circulate for 48 hours if cleaning is done while being heated, allow 72 hours of circulation on cold systems.
5. During the cleaning, periodically do hard short blow downs on low points in the system to remove any sediment accumulations.
6. **Take sample # 1** after the cleaner is completely mixed, before proceeding onto the next stage. Have Specified Technical Sales (STS) perform a laboratory analysis on the sample to confirm that sufficient cleaner has been added to the system. Confirmation that sufficient cleaner has been added to the system must first be received from STS prior to moving onto **PART 2**.

PART 2 – Thoroughly Flush the system to remove the cleaner

7. After the solution has adequately circulated and STS has confirmed that the recommended amount of FQ7103 is present, begin flushing. A gradual process of continuous bleed-off and make-up is recommended. Drain from the lowest available source, at the same rate as the system make-up. Observe the discharge.
8. When the effluent is clean and clear, matching the raw water quality, cease the bleed-off. Check for any remaining sediment or water loss at system drain valves.
9. **Take sample #2.** Have STS perform a laboratory test to confirm that the organo phosphonate levels within the sample show that sufficient FQ7103 cleaner has been removed from the system. (For a successful flush to have been performed < 4 ppm must be achieved). Confirmation that a satisfactory flush was completed must first be received from STS prior to moving onto **PART 3.**

PART 3 – Add Corrshield MD 4102/ Glycol to the system (*Dosages:4 liter per every 1000 liters of system volume)*

10. To provide passivation add the specified dosage of corrosion inhibitor (and glycol if required) as soon as possible, after confirming flush results. Circulate the entire system well to mix the inhibitor. Test the inhibitor concentration with the test kit provided. **Take sample #3**. Have STS perform a laboratory test to evaluate the inhibitor levels, pH, conductivity, and freeze point (if applicable). At this point STS will either provide a final written report confirming that the system is in good starting condition, or advise that insufficient inhibitor is present. If insufficient inhibitor is present an additional sample or samples will be required for laboratory analysis by STS until the recommended levels in the system are achieved. Only at the point where the inhibitor levels achieve the recommended control range criteria can a final written report be provided.
11. Install by-pass filter cartridge to remove any contaminants that remain. Monitor the filter flow and replace cartridge as necessary.
12. Before tying in a new system to an existing system take a sample of the existing system water and return it to STS, for chemical analysis for compatibility and an indication of systems chemical program integrity. **Label sample # 4 (Only if applicable)**

CUSTOMERS RESPONSIBILITIES

1. Customer shall provide STS with full details of the size of the system at the time of quotation for the job to enable an accurate and precise calculation to be made in consideration of the amount of FQ7103 cleaner that will be required to adequately clean the system.
2. Leaving raw water in the system for an extended period of time is not desirable as this may result in flash corrosion occurring in the system, so please submit each water sample to STS for testing without undue delay.

DISCLAIMER

The reports provided are based exclusively on the samples provided.

If at any time the above procedure is not followed or the customers responsibilities are not fulfilled, i.e. samples 1,2,or 3 are not received, all three samples are received at once at the conclusion of the cleaning procedure, samples are received a long time past the date that they were taken, etc; STS reserves the right to decline to issue a final written report attesting that the system is in good starting condition.

Molybdenum (Mo) Test Kit
1 drop = 2, 5, 20, or 50 ppm

STS-6213-TK

FOR BEST ACCURACY (1) ENSURE ACCURATE SAMPLE SIZE. (2) HOLD DROPPER BOTTLE VERTICALLY, NOT AT AN ANGLE.

Testing Tips:

- *Wear appropriate safety equipment.*
- *Read MSDS before use.*
- *Be sure there is adequate lighting during testing.*
- *Hold reagent bottles vertically for best results.*
- *Make sure you have an accurate sample.*

Kit Components:

STS-6213-B	*Molybdenum Buffer, 60 mL*
STS-6213-I	*Molybdenum Indicator, 60 mL*
STS-6213-T	*Molybdenum Titrating Sol., 60 mL*
SY-2005-P	*Syringe, 5 mL*
SY-2001-P	*Syringe, 1 mL*
VL-1005-V	*Vial, 10-50 mL*

EndPoint ID® Test Procedure +PLUS

1 **Select a sample size** based on the desired drop equivalency. Rinse and fill the vial with desired amount.

1 drop = 2 ppm	25 mL sample
1 drop = 5 ppm	10 mL sample
1 drop = 20 ppm	2.5 mL sample*
1 drop = 50 ppm	1.0 mL sample*

For 2.5 and 1.0 mL sample size: Use 5 mL syringe to add sample, then dilute to 10 mL with molybdenum free water.

2 **Add 1 mL of Molybdenum Buffer** (STS-6213-B) to the sample using the 1 mL syringe.



3 **Add 10 drops of Molybdenum Indicator** (STS-6213-I) and swirl to mix. The sample will turn red if molybdenum is present.



4 **Add Molybdenum Titrating Solution** (STS-6213-T) one drop at a time while swirling. Count the number of drops until the sample color changes from red to green and no further color change occurs.



5 Record your results by multiplying by the factor chosen in step 1.

# of drops x factor = ppm Molybdenum (Mo)

Note: To convert Molybdenum (Mo) to Molybdate (MoO_4), multiply by 1.7

Specified Technical Sales Ltd.

Specified Technical Sales Ltd.

LOG CHART FOR CORRSHIELD MD4102

DATE	P.P.M CORRSHIELD MD4102	pH	CONDUCTIVITY	CORRSHIELD MD4102 ADDED	EXP TANK	WATER METER	COMMENTS
	60-100 P.P.M	8.5 - 10.5	MMHOS 3600MAX	LITRES	1/2 -2/3		

Closed System Water Treatment Equipment

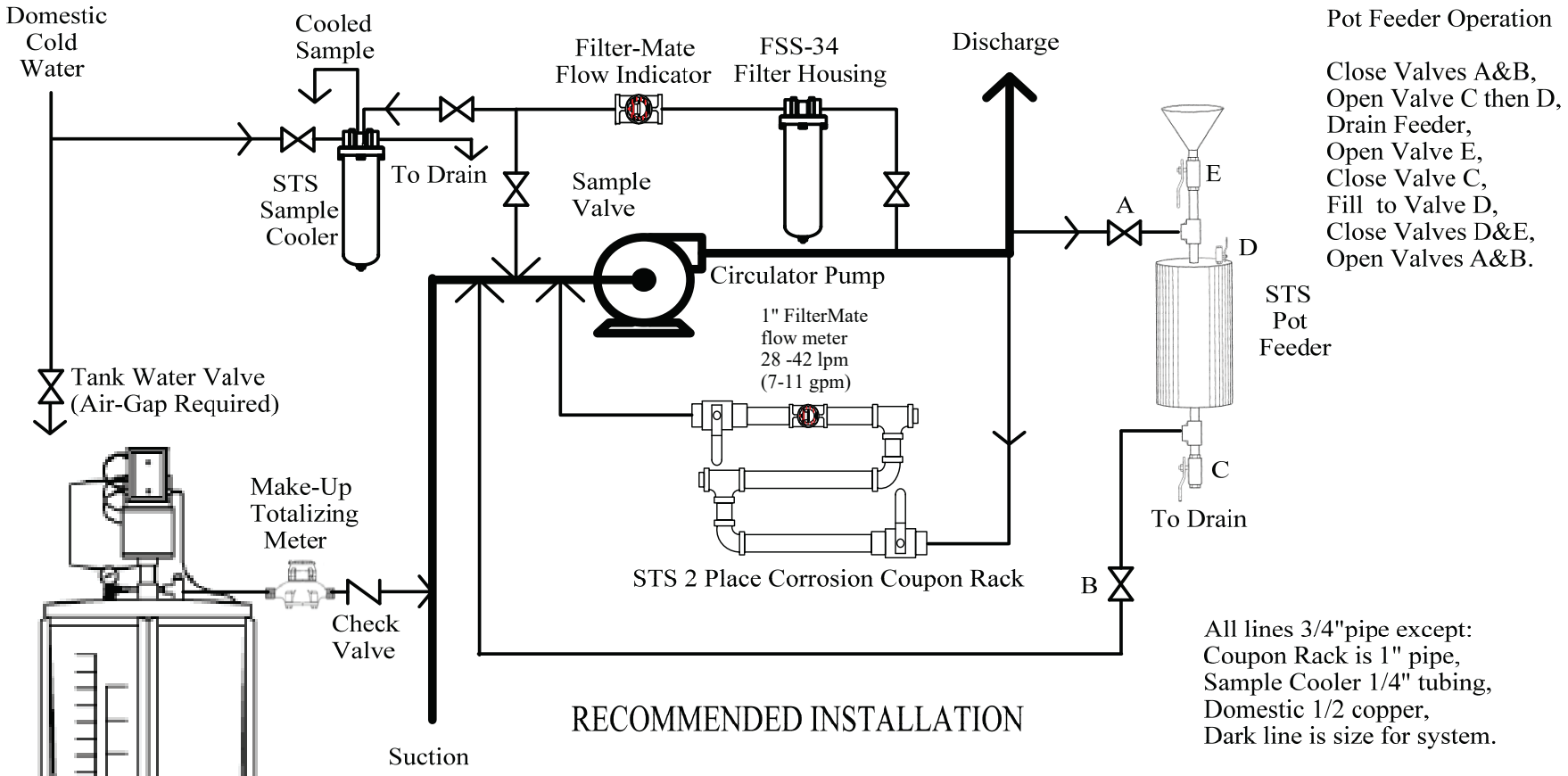

Pot Feeder Operation

Close Valves A&B,
Open Valve C then D,
Drain Feeder,
Open Valve E,
Close Valve C,
Fill to Valve D,
Close Valves D&E,
Open Valves A&B.

All lines 3/4"pipe except:
Coupon Rack is 1" pipe,
Sample Cooler 1/4" tubing,
Domestic 1/2 copper,
Dark line is size for system.

RECOMMENDED INSTALLATION

Do not install corrosion coupons until system is cleaned and passivated with the recommended corrosion inhibitor. Please consult a STS Ltd. Technical Representative to record installation date, serial number and other pertanant coupon data.

Revisions

Specified Technical Sales Ltd.

TITLE:

Closed System Water Treatment Equipment, Glycol Feed System for Glycol Systems only.

Drawn by: Christopher Wedge C.E.T. not to scale
Date: October 20/2008 Drawing no GAD19

Base Model

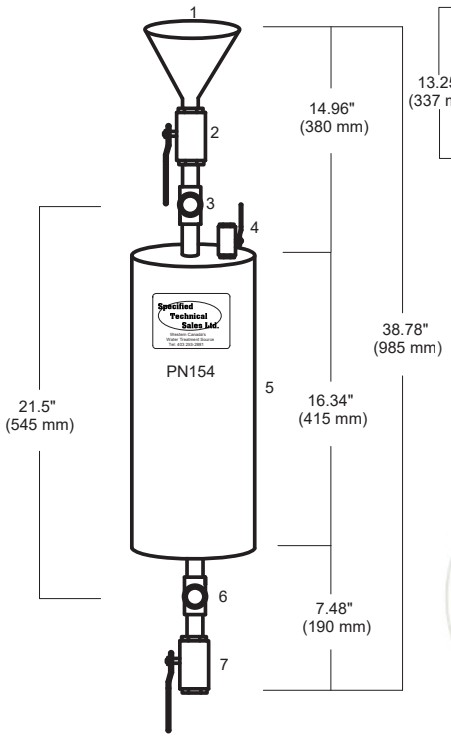

Offset Model

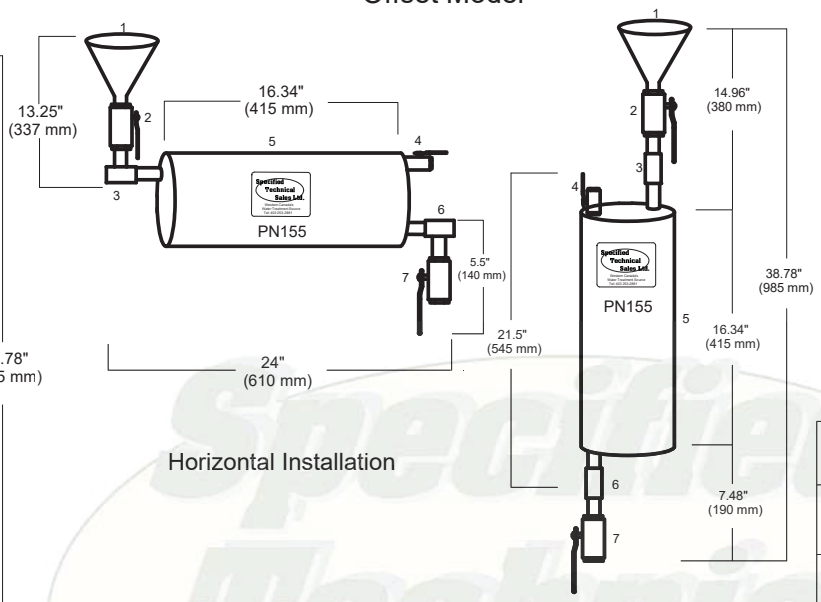

8 Litre Chemical Pot Feeder

ITEM	Description
1	Chemical Feed Funnel
2	3/4" SS ball valve w/ brass housing
3	3/4" N.P.T. outlet connection
4	1/4" air vent
5	8 L Welded Steel, M.A.W.P of 1035 kPa Vessel leak tested to 350kPa prior to assembly
6	3/4" N.P.T. inlet connection
7	3/4" SS ball valve w/ brass housing drain valve

Model Selection

- ☑ Base Model (PN154)
- ☐ Off-Set Model (PN155)

Pressure Rating

- ☑ LP - MAWP of 1035 kPa(150 psi), Vessel Leak tested to 350 kPa(50 psi)
- ☐ HP - MAWP of 2100 kPa(300 psi), Vessel Leak Tested to 700 kPa(100 psi)

Optional Accessories

- ☐ **STS-SAFETY-FLO funnel** -Keeps operator safe from spray of hot or dangerous chemicals

Revisions

Specified Technical Sales Ltd.

Title: **STS-8 Litre Chemical Pot Feeder**

Drawn by: Judith Vergara

Not To Scale

Date: July 17/14

Drawing no. **ED154LP-8**

String Wound Tinned Core Cartridges

The **AWP String Wound Tinned Core Cartridges** are a dirt/rust cartridge with a natural cotton string wound media. These string wound cartridges are ideal for point-of-use, point-of-entry or commercial/industrial applications as they can handle a range of flow rates depending on the cartridge size. The natural cotton can be used for treatment of potable liquids, vegetable oils, beverages, organic solvents, water, dilute acids, petroleum oils, and other services. The maximum temperature rating is 150°C (300°F) with a variety of micron sizes to choose from. These ratings range from 1 to 50 microns Specified Technical Sales Ltd. offers a 9 7/8", 20" and 30" cartridge length for application flexibility.

These cartridges are an economical choice for pre-filtration applications.



Revisions	Specified Technical Sales Ltd.
May, 2010	Title: **STS String Wound Filter Cartridges**
	Drawn by: Christopher Wedge C.E.T *Not To Scale*
	Date: April 26/07 Drawing no. **ED 165A**



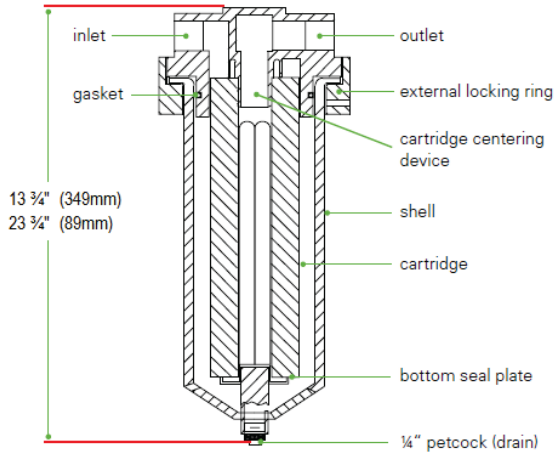

Mounting Bracket and Pin wrench Included

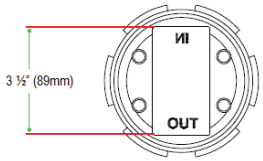



-High quality filter housings for high temperature and pressure applications. 99 Degrees Celcius, 2068 kPa (300 psi)

-The housings accept 9 7/8" or 10" cartridges.

-Flowrate: Approx. 8 gpm/cartridge (depending on cartridge selection).

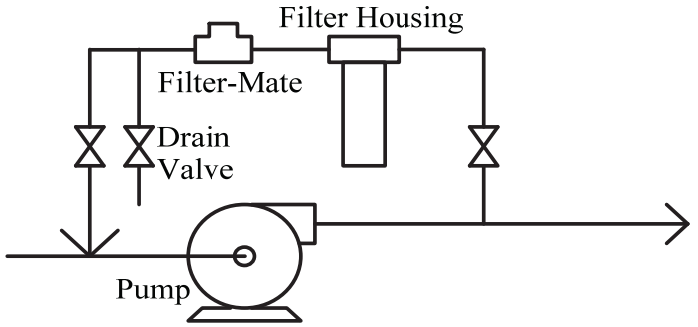

RECOMMENDED INSTALLATION

Model	Description	Connections
PN165 HMS-10A	Stainless Steel, Single Cartridge Length	3/4" FMNPT
PN165 HMS-20A	Stainless Steel, Double Cartridge Length	3/4" FMNPT

Revisions

Specified Technical Sales Ltd.

Title: **Stainless Steel Micron Filter Housing w/ Drain valve**

__ **10A**
__ **20A**

Drawn by: Christopher Wedge C.E.T *Not To Scale*

Date: Dec.23/2011 Drawing no. **ED 165HMS**

FILTER-MATE flow indicator

3/4" and 1" Model

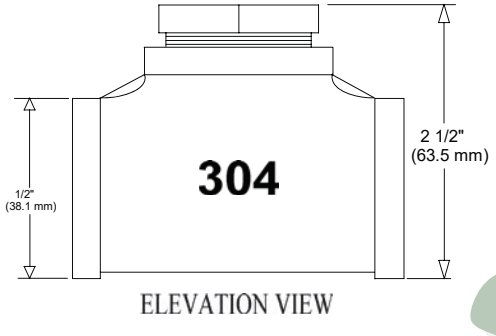

ELEVATION VIEW

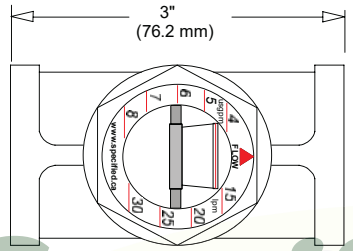

PLAN VIEW

2 inch Model

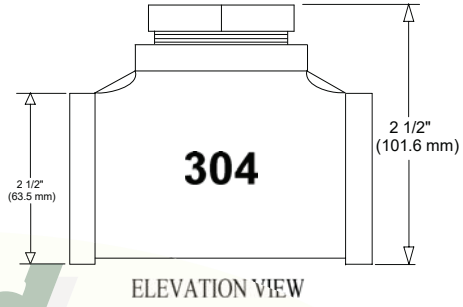

ELEVATION VIEW

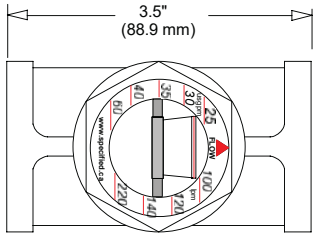

PLAN VIEW

Specified Technical Sales Ltd.

FEATURES:

- 304 Stainless Steel body and internals.
- Metric and U.S. scales.
- S.S. return spring.
- Fused glass window

BENEFITS:

- Corrosion free service.
- Maximum flow can be set to cartridge manufacturers recommendations eliminating media separation.
- Can be installed vertically or horizontally.
- No gaskets to leak.

MODEL	SIZE N.P.T	USGPM/LPM	P.S.I / kPa	Max. Temp	Body Mat.	Cap Mat.	Int. mat	Accuracy
Filter-Mate 3/4	3/4" - 20mm	4-8 / 15-30	150 / 1082	212F / 100C	304 S.S	Plated Steel	Nylon / S.S.	+ - 10%
Filter-Mate 1	1" - 25mm	7-11 / 28-42	150 / 1082	212F / 100C	304 S.S	Plated Steel	Nylon / S.S	+ - 10%
Filter-Mate 2	2" - 50mm	25-60 / 100-220	150 / 1082	212F / 100C	304 S.S	Plated Steel	Nylon / S.S.	+ - 10%

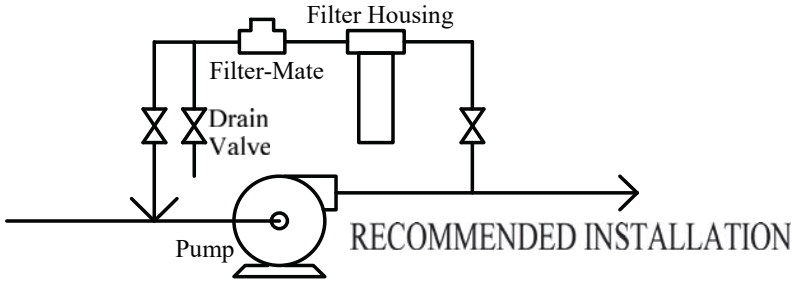

RECOMMENDED INSTALLATION

Revisions

August 2014

Specified Technical Sales Ltd.

Title: **Filter-Mate Flow Indicator**

Drawn by: Christopher Wedge C.E.T *Not To Scale*

Date: Aug 04/00

Drawing no. **ED 184**

SF100 Automatic Glycol Feed System

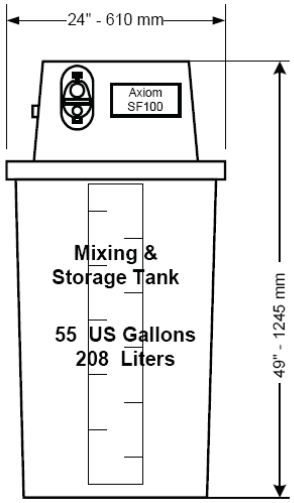

PUMP PERFORMANCE

0.09 l/s (1.4gpm) @ free flow
0.06 l/s (1.0gpm) @ 345kPa (50psi)

Pump Model

Axiom 8000 Series

Motor

115/60/1, 0.7AMPS



Specification

Hydronic system feeder shall be AXIOM INDUSTRIES LTD. Model SF100. System shall include 208 litre (55 US gallon) storage/mixing tank with cover; pump suction hose with inlet strainer; pressure pump with thermal cut-out; integral pressure switch; integral check valve; cord and plug; pre-charged accumulator tank with EPDM diaphragm; manual diverter valve for purging air and agitating contents of storage tank; pressure regulating valve adjustable (35 – 380 KPa; 5 – 55 psig) complete with pressure gauge; integral replaceable strainer; built-in check valve; union connection; 12 mm (½") x 900 mm (36") long flexible connection hose with check valve; low level pump cut-out. Pressure pump shall be capable of running dry without damage. Power supply 115/60/1 0.7 A. Unit shall be completely pre-assembled and certified by a recognized testing agency to CSA standard C22.2 No 68.

Options

☒ **RIA10-1-SAA-** Low Level Alarm Panel c/w Remote Monitoring Dry Contacts and Selectable Audible Alarm

LIMITED WARRANTY

The SF100 is warranted against defects in materials and workmanship for one year.

Certified to CAN/CSA C22.2 No. 68

ETL LISTED c US

9901055
Conforms to UL73

Revisions
Feb, 2010

Specified Technical Sales Ltd.

Title: Axiom Automatic Glycol Feed Tank, Pump, Pressure Switch, Expansion Tank, and Pressure Reducing Valve

Drawn by: Christopher Wedge C.E.T *Not To Scale*

Date: June 27/02 Drawing no. **ED147**

SAFETY DATA SHEET
FERROQUEST* FQ7103

1. Identification

Product identifier	**FERROQUEST FQ7103**
Other means of identification	None.
Version #	1.1
Prepared by	This SDS has been prepared by SUEZ Regulatory Department (1-215-355-3300).
Revision date	Dec-17-2017
Supersedes date	Aug-01-2016
Recommended use	Cleaner
Recommended restrictions	None known.

Company/undertaking identification

SUEZ Water Technologies & Solutions Canada
3239 Dundas Street West
Oakville, Ontario, L6M 4B2
T 905-465-3030

Emergency telephone

(800) 877-1940

2. Hazard(s) identification

Physical hazards	Not classified.	
Health hazards	Serious eye damage/eye irritation	Category 2
	Specific target organ toxicity, single exposure	Category 3 respiratory tract irritation

Label elements



Signal word	Warning
Hazard statement	Causes serious eye irritation. May cause respiratory irritation.
Precautionary statement	
Prevention	Avoid breathing mist or vapor. Wash thoroughly after handling. Use only outdoors or in a well-ventilated area. Wear eye protection/face protection.
Response	IF INHALED: Remove person to fresh air and keep comfortable for breathing. IF IN EYES: Rinse cautiously with water for several minutes. Remove contact lenses, if present and easy to do. Continue rinsing. Call a poison center/doctor if you feel unwell. If eye irritation persists: Get medical advice/attention.
Storage	Store in a well-ventilated place. Keep container tightly closed. Store locked up.
Disposal	Dispose of contents/container in accordance with local/regional/national/international regulations.
Other hazards	None known.
Supplemental information	None.

3. Composition/information on ingredients

Mixtures

Components	CAS #	Percent (wt/wt)
PHOSPHATE ESTER POTASSIUM SALT	66057-30-5	2.5 - 10
Sodium sulphite	7757-83-7	2.5 - 10

Composition comments Information for specific product ingredients as required by the WHMIS Regulations is listed. Refer to additional sections of this SDS for our assessment of the potential hazards of this formulation.

4. First-aid measures

Inhalation Remove victim to fresh air and keep at rest in a position comfortable for breathing. Call a POISON CENTER or doctor/physician if you feel unwell.

Skin contact Wash off with soap and water. Get medical attention if irritation develops and persists.

Eye contact Immediately flush eyes with plenty of water for at least 15 minutes. Remove contact lenses, if present and easy to do. Continue rinsing. If eye irritation persists: Get medical advice/attention.

Ingestion Rinse mouth. Get medical attention if symptoms occur.

Most important symptoms/effects, acute and delayed Severe eye irritation. Symptoms may include stinging, tearing, redness, swelling, and blurred vision. May cause respiratory irritation.

Indication of immediate medical attention and special treatment needed Provide general supportive measures and treat symptomatically. Keep victim under observation. Symptoms may be delayed.

General information If you feel unwell, seek medical advice (show the label where possible). Ensure that medical personnel are aware of the material(s) involved, and take precautions to protect themselves.

5. Fire-fighting measures

Suitable extinguishing media Water fog. Foam. Dry chemical powder. Carbon dioxide (CO2).

Unsuitable extinguishing media Do not use water jet as an extinguisher, as this will spread the fire.

Specific hazards arising from the chemical During fire, gases hazardous to health may be formed.

Special protective equipment and precautions for firefighters Wear full protective clothing, including helmet, self-contained positive pressure or pressure demand breathing apparatus, protective clothing and face mask.

Fire fighting equipment/instructions In case of fire and/or explosion do not breathe fumes. Use standard firefighting procedures and consider the hazards of other involved materials. Move containers from fire area if you can do so without risk. Cool containers / tanks with water spray.

Specific methods Use standard firefighting procedures and consider the hazards of other involved materials.

General fire hazards No unusual fire or explosion hazards noted.

6. Accidental release measures

Personal precautions, protective equipment and emergency procedures Keep unnecessary personnel away. Keep people away from and upwind of spill/leak. Wear appropriate protective equipment and clothing during clean-up. Avoid breathing mist or vapor. Do not touch damaged containers or spilled material unless wearing appropriate protective clothing. Ensure adequate ventilation. Local authorities should be advised if significant spillages cannot be contained. For personal protection, see section 8 of the SDS.

Methods and materials for containment and cleaning up Large Spills: Stop the flow of material, if this is without risk. Dike the spilled material, where this is possible. Absorb in vermiculite, dry sand or earth and place into containers. Following product recovery, flush area with water.

Small Spills: Wipe up with absorbent material (e.g. cloth, fleece). Clean surface thoroughly to remove residual contamination.

Never return spills to original containers for re-use. For waste disposal, see section 13 of the SDS.

Environmental precautions Avoid discharge into drains, water courses or onto the ground.

7. Handling and storage

Precautions for safe handling Avoid breathing mist or vapor. Avoid contact with eyes. Provide adequate ventilation. Wear appropriate personal protective equipment. Observe good industrial hygiene practices.

Conditions for safe storage, including any incompatibilities Store locked up. Store in original tightly closed container. Store away from incompatible materials (see Section 10 of the SDS). Protect from freezing. If frozen, thaw and mix completely prior to use.

8. Exposure controls/personal protection

Occupational exposure limits	No exposure limits noted for ingredient(s).
Biological limit values	No biological exposure limits noted for the ingredient(s).
Appropriate engineering controls	Good general ventilation (typically 10 air changes per hour) should be used. Ventilation rates should be matched to conditions. If applicable, use process enclosures, local exhaust ventilation, or other engineering controls to maintain airborne levels below recommended exposure limits. If exposure limits have not been established, maintain airborne levels to an acceptable level. Provide eyewash station. Good general ventilation should be used. Ventilation rates should be matched to conditions. If applicable, use process enclosures, local exhaust ventilation, or other engineering controls to maintain airborne levels below recommended exposure limits. If exposure limits have not been established, maintain airborne levels to an acceptable level.

Individual protection measures, such as personal protective equipment

Eye/face protection	Wear safety glasses with side shields (or goggles).
Skin protection	
Hand protection	Wear appropriate chemical resistant gloves. The choice of an appropriate glove does not only depend on its material but also on other quality features and is different from one producer to the other. Suitable gloves can be recommended by the glove supplier. Glove selection must take into account any solvents and other hazards present.
Other	Wear suitable protective clothing.
Respiratory protection	If engineering controls do not maintain airborne concentrations below recommended exposure limits (where applicable) or to an acceptable level (in countries where exposure limits have not been established), an approved respirator must be worn.
Thermal hazards	Wear appropriate thermal protective clothing, when necessary.
General hygiene considerations	Always observe good personal hygiene measures, such as washing after handling the material and before eating, drinking, and/or smoking. Routinely wash work clothing and protective equipment to remove contaminants.

9. Physical and chemical properties

Appearance	Liquid
Color	Colorless to light yellow
Odor	Slight
pH (concentrated product)	5.9 Neat
Initial boiling point and boiling range	216 °F (102 °C)
Flash point	> 199 °F (> 93 °C) P-M(CC)
Evaporation rate	Slower than Ether
Flammability (solid, gas)	Not applicable.
Upper/lower flammability or explosive limits	
Explosive limit - lower (%)	Not available.
Explosive limit - upper (%)	Not available.
Vapor pressure	18 mmHg
Vapor pressure temp.	70 °F (21 °C)
Vapor density	< 1
Relative density	1.12
Relative density temperature	70 °F (21 °C)
Solubility(ies)	
Solubility (water)	100 %
Viscosity	20 mPa.s
Viscosity temperature	70 °F (21 °C)
Other information	
Explosive properties	Not explosive.
Oxidizing properties	Not oxidizing.
Pour point	31 °F (-1 °C)
Specific gravity	1.122
VOC	0 % CALCULATED

10. Stability and reactivity

Reactivity	The product is stable and non-reactive under normal conditions of use, storage and transport.
Chemical stability	Material is stable under normal conditions.
Possibility of hazardous reactions	Hazardous polymerization does not occur.
Conditions to avoid	Avoid temperatures exceeding the flash point. Contact with incompatible materials.
Incompatible materials	Strong oxidizing agents.
Hazardous decomposition products	Oxides of carbon, nitrogen, phosphorus, and sulphur evolved in fire.

11. Toxicological information

Information on likely routes of exposure

Inhalation	May cause irritation to the respiratory system.
Skin contact	Prolonged or repeated contact may cause irritation.
Eye contact	Causes serious eye irritation.
Ingestion	Expected to be a low ingestion hazard.
Symptoms related to the physical, chemical and toxicological characteristics	Severe eye irritation. Symptoms may include stinging, tearing, redness, swelling, and blurred vision. May cause respiratory irritation.

Information on toxicological effects

Acute toxicity May cause respiratory irritation.

Product	Species	Test Results
FERROQUEST FQ7103 (CAS Mixture)		
Acute		
Dermal		
LD50	Rabbit	> 5000 mg/kg, (Calculated according to GHS additivity formula)
Oral		
LD50	Rat	> 5000 mg/kg, (Calculated according to GHS additivity formula)

Components	Species	Test Results
Sodium sulphite (CAS 7757-83-7)		
Acute		
Dermal		
LD50	Rabbit	> 2000 mg/kg
Inhalation		
LC50	Rat	> 5.5 mg/l, 4 Hour
Oral		
LD50	Rat	2610 mg/kg

* Estimates for product may be based on additional component data not shown.

Skin corrosion/irritation	Prolonged skin contact may cause temporary irritation.
Serious eye damage/eye irritation	Causes serious eye irritation.

Respiratory or skin sensitization

Respiratory sensitization	This product is not expected to cause respiratory sensitization.
Skin sensitization	This product is not expected to cause skin sensitization.
Germ cell mutagenicity	No data available to indicate product or any components present at greater than 0.1% are mutagenic or genotoxic.
Carcinogenicity	Not classified.

IARC Monographs. Overall Evaluation of Carcinogenicity

Sodium sulphite (CAS 7757-83-7) 3 Not classifiable as to carcinogenicity to humans.

Reproductive toxicity This product is not expected to cause reproductive or developmental effects.

Specific target organ toxicity - single exposure	May cause respiratory irritation.
Specific target organ toxicity - repeated exposure	Not classified.
Aspiration hazard	Based on available data, the classification criteria are not met.

12. Ecological information

Ecotoxicity

Product		Species	Test Results
FERROQUEST FQ7103 (CAS Mixture)			
	0% Mortality	Fathead Minnow	2000 mg/L, Static Renewal Bioassay, 96 hour
Aquatic			
Crustacea	0% Mortality	Daphnia magna	845 mg/L, Static Renewal Bioassay, 48 hour
	30% Mortality	Daphnia magna	1300 mg/L, Static Renewal Bioassay, 48 hour

Bioaccumulative potential	No data available.
Mobility in soil	No data available.
Other adverse effects	Not available.

Persistence and degradability

No data is available on the degradability of this product.

13. Disposal considerations

Disposal instructions	Collect and reclaim or dispose in sealed containers at licensed waste disposal site. Dispose of contents/container in accordance with local/regional/national/international regulations.
Local disposal regulations	Dispose in accordance with all applicable regulations.
Waste from residues / unused products	Dispose of in accordance with local regulations. Empty containers or liners may retain some product residues. This material and its container must be disposed of in a safe manner (see: Disposal instructions).
Contaminated packaging	Since emptied containers may retain product residue, follow label warnings even after container is emptied. Empty containers should be taken to an approved waste handling site for recycling or disposal.

14. Transport information

TDG

Not regulated as dangerous goods.

The goods described above have been classified using a combination of testing, technical data, calculations and manufacturer knowledge in accordance with Part 2, Classification. TDG Classification is valid for road or rail transport only. For shipment by air or water, refer to IATA or IMDG regulations.

DOT

Not regulated as a dangerous good.

Some containers may be exempt from Dangerous Goods/Hazmat Transport Regulations, please check BOL for exact container classification.

IMDG

Not regulated as dangerous goods.

IATA

Not regulated as dangerous goods.

15. Regulatory information

Canadian regulations

Controlled Drugs and Substances Act

Not regulated.

Export Control List (CEPA 1999, Schedule 3)

Not listed.

Greenhouse Gases

Not listed.

SAFETY DATA SHEET
CORRSHIELD* MD4102

1. Identification

Product identifier	**CORRSHIELD MD4102**
Other means of identification	None.
Version #	2.1
Prepared by	This SDS has been prepared by SUEZ Regulatory Department (1-215-355-3300).
Revision date	Dec-17-2017
Supersedes date	Oct-23-2017
Recommended use	Water-based corrosion inhibitor
Recommended restrictions	None known.

Company/undertaking identification

SUEZ Water Technologies & Solutions Canada
3239 Dundas Street West
Oakville, Ontario, L6M 4B2
T 905-465-3030

Emergency telephone

(800) 877-1940

2. Hazard(s) identification

Physical hazards	Not classified.	
Health hazards	Skin corrosion/irritation	Category 1B
	Serious eye damage/eye irritation	Category 1

Label elements



Signal word	Danger
Hazard statement	Causes severe skin burns and eye damage. Causes serious eye damage.
Precautionary statement	
Prevention	Do not breathe mist or vapor. Wash thoroughly after handling. Wear eye protection/face protection.
Response	IF SWALLOWED: Rinse mouth. Do NOT induce vomiting. IF ON SKIN (or hair): Take off immediately all contaminated clothing. Rinse skin with water. IF INHALED: Remove person to fresh air and keep comfortable for breathing. IF IN EYES: Rinse cautiously with water for several minutes. Remove contact lenses, if present and easy to do. Continue rinsing. Immediately call a POISON CENTER/doctor. Wash contaminated clothing before reuse.
Storage	Store locked up.
Disposal	Dispose of contents/container in accordance with local/regional/national/international regulations.
Other hazards	None known.
Supplemental information	None.

3. Composition/information on ingredients

Mixtures

Components	CAS #	Percent (wt/wt)
Boric Acid (hbo2), Sodium Salt, Dihydrate	16800-11-6	2.5 - 10
Morpholine	110-91-8	2.5 - 10

Composition comments Information for specific product ingredients as required by the WHMIS Regulations is listed. Refer to additional sections of this SDS for our assessment of the potential hazards of this formulation.

4. First-aid measures

Inhalation Move to fresh air. Call a physician if symptoms develop or persist.

Skin contact Take off immediately all contaminated clothing. Rinse skin with water/shower. Call a physician or poison control center immediately. Chemical burns must be treated by a physician. Wash contaminated clothing before reuse.

Eye contact Immediately flush eyes with plenty of water for at least 15 minutes. Remove contact lenses, if present and easy to do. Continue rinsing. Call a physician or poison control center immediately.

Ingestion Call a physician or poison control center immediately. Rinse mouth. Do not induce vomiting. If vomiting occurs, keep head low so that stomach content doesn't get into the lungs.

Most important symptoms/effects, acute and delayed Burning pain and severe corrosive skin damage. Causes serious eye damage. Symptoms may include stinging, tearing, redness, swelling, and blurred vision. Permanent eye damage including blindness could result.

Indication of immediate medical attention and special treatment needed Provide general supportive measures and treat symptomatically. Chemical burns: Flush with water immediately. While flushing, remove clothes which do not adhere to affected area. Call an ambulance. Continue flushing during transport to hospital. Keep victim under observation. Symptoms may be delayed.

General information Ensure that medical personnel are aware of the material(s) involved, and take precautions to protect themselves.

5. Fire-fighting measures

Suitable extinguishing media Water fog. Foam. Dry chemical powder. Carbon dioxide (CO2).

Unsuitable extinguishing media Do not use water jet as an extinguisher, as this will spread the fire.

Specific hazards arising from the chemical During fire, gases hazardous to health may be formed.

Special protective equipment and precautions for firefighters Wear full protective clothing, including helmet, self-contained positive pressure or pressure demand breathing apparatus, protective clothing and face mask.

Fire fighting equipment/instructions In case of fire and/or explosion do not breathe fumes. Use standard firefighting procedures and consider the hazards of other involved materials. Move containers from fire area if you can do so without risk. Cool containers / tanks with water spray.

Specific methods Use standard firefighting procedures and consider the hazards of other involved materials.

General fire hazards No unusual fire or explosion hazards noted.

6. Accidental release measures

Personal precautions, protective equipment and emergency procedures Keep unnecessary personnel away. Keep people away from and upwind of spill/leak. Wear appropriate protective equipment and clothing during clean-up. Do not breathe mist or vapor. Do not touch damaged containers or spilled material unless wearing appropriate protective clothing. Ensure adequate ventilation. Local authorities should be advised if significant spillages cannot be contained. For personal protection, see section 8 of the SDS.

Methods and materials for containment and cleaning up Large Spills: Stop the flow of material, if this is without risk. Dike the spilled material, where this is possible. Absorb in vermiculite, dry sand or earth and place into containers. Following product recovery, flush area with water.

Small Spills: Wipe up with absorbent material (e.g. cloth, fleece). Clean surface thoroughly to remove residual contamination.

Never return spills to original containers for re-use. For waste disposal, see section 13 of the SDS.

Environmental precautions Avoid discharge into drains, water courses or onto the ground.

7. Handling and storage

Precautions for safe handling Do not breathe mist or vapor. Do not get in eyes, on skin, or on clothing. Avoid prolonged exposure. Provide adequate ventilation. Wear appropriate personal protective equipment. Observe good industrial hygiene practices.

Conditions for safe storage, including any incompatibilities Store locked up. Store in original tightly closed container. Store away from incompatible materials (see Section 10 of the SDS).

8. Exposure controls/personal protection

Occupational exposure limits

US. ACGIH Threshold Limit Values

Components	Type	Value
Morpholine (CAS 110-91-8)	TWA	20 ppm

Canada. Alberta OELs (Occupational Health & Safety Code, Schedule 1, Table 2)

Components	Type	Value
Morpholine (CAS 110-91-8)	TWA	71 mg/m3 20 ppm

Canada. British Columbia OELs. (Occupational Exposure Limits for Chemical Substances, Occupational Health and Safety Regulation 296/97, as amended)

Components	Type	Value
Morpholine (CAS 110-91-8)	TWA	20 ppm

Canada. Manitoba OELs (Reg. 217/2006, The Workplace Safety And Health Act)

Components	Type	Value
Morpholine (CAS 110-91-8)	TWA	20 ppm

Canada. Ontario OELs. (Control of Exposure to Biological or Chemical Agents)

Components	Type	Value
Morpholine (CAS 110-91-8)	TWA	20 ppm

Canada. Quebec OELs. (Ministry of Labor - Regulation Respecting the Quality of the Work Environment)

Components	Type	Value
Morpholine (CAS 110-91-8)	TWA	71 mg/m3 20 ppm

Biological limit values No biological exposure limits noted for the ingredient(s).

Exposure guidelines

Canada - Alberta OELs: Skin designation

Morpholine (CAS 110-91-8) Can be absorbed through the skin.

Canada - British Columbia OELs: Skin designation

Morpholine (CAS 110-91-8) Can be absorbed through the skin.

Canada - Manitoba OELs: Skin designation

Morpholine (CAS 110-91-8) Can be absorbed through the skin.

Canada - Ontario OELs: Skin designation

Morpholine (CAS 110-91-8) Can be absorbed through the skin.

Canada - Quebec OELs: Skin designation

Morpholine (CAS 110-91-8) Can be absorbed through the skin.

Canada - Saskatchewan OELs: Skin designation

Morpholine (CAS 110-91-8) Can be absorbed through the skin.

US ACGIH Threshold Limit Values: Skin designation

Morpholine (CAS 110-91-8) Can be absorbed through the skin.

Appropriate engineering controls Good general ventilation (typically 10 air changes per hour) should be used. Ventilation rates should be matched to conditions. If applicable, use process enclosures, local exhaust ventilation, or other engineering controls to maintain airborne levels below recommended exposure limits. If exposure limits have not been established, maintain airborne levels to an acceptable level. Eye wash facilities and emergency shower must be available when handling this product. Good general ventilation should be used. Ventilation rates should be matched to conditions. If applicable, use process enclosures, local exhaust ventilation, or other engineering controls to maintain airborne levels below recommended exposure limits. If exposure limits have not been established, maintain airborne levels to an acceptable level.

Individual protection measures, such as personal protective equipment

Eye/face protection Splash proof chemical goggles. Face shield.

Skin protection

Hand protection Wear appropriate chemical resistant gloves. The choice of an appropriate glove does not only depend on its material but also on other quality features and is different from one producer to the other. Glove selection must take into account any solvents and other hazards present.

Other Wear appropriate chemical resistant clothing.

Respiratory protection	If engineering controls do not maintain airborne concentrations below recommended exposure limits (where applicable) or to an acceptable level (in countries where exposure limits have not been established), an approved respirator must be worn.
Thermal hazards	Wear appropriate thermal protective clothing, when necessary.
General hygiene considerations	Always observe good personal hygiene measures, such as washing after handling the material and before eating, drinking, and/or smoking. Routinely wash work clothing and protective equipment to remove contaminants.

9. Physical and chemical properties

Appearance	Liquid
Color	Colorless to light yellow
Odor	Slight
Odor threshold	Not available.
pH (concentrated product)	10.5
Melting point/freezing point	25 °F (-4 °C)
Initial boiling point and boiling range	212 °F (100 °C)
Flash point	> 200 °F (> 93 °C) P-M(CC)
Evaporation rate	< 1 (Ether = 1)
Flammability (solid, gas)	Not applicable.
Upper/lower flammability or explosive limits	
Flammability limit - lower (%)	Not available.
Flammability limit - upper (%)	Not available.
Explosive limit - lower (%)	Not available.
Explosive limit - upper (%)	Not available.
Vapor pressure	18 mm Hg
Vapor pressure temp.	70 °F (21 °C)
Vapor density	< 1 (Air = 1)
Relative density	1.09
Relative density temperature	70 °F (21 °C)
Solubility(ies)	
Solubility (water)	100 %
Partition coefficient (n-octanol/water)	Not available.
Auto-ignition temperature	Not available.
Decomposition temperature	Not available.
Viscosity	10 cps
Viscosity temperature	70 °F (21 °C)
Other information	
Explosive properties	Not explosive.
Oxidizing properties	Not oxidizing.
Pour point	30 °F (-1 °C)
Specific gravity	1.091
VOC	5 % (Calculated)

10. Stability and reactivity

Reactivity	The product is stable and non-reactive under normal conditions of use, storage and transport.
Chemical stability	Material is stable under normal conditions.
Possibility of hazardous reactions	Hazardous polymerization does not occur.
Conditions to avoid	Avoid temperatures exceeding the flash point. Contact with incompatible materials.
Incompatible materials	Strong acids. Strong oxidizing agents.

Hazardous decomposition products	Elemental oxides.

11. Toxicological information

Information on likely routes of exposure

Inhalation	May cause irritation to the respiratory system. Prolonged inhalation may be harmful.
Skin contact	Causes severe skin burns.
Eye contact	Causes serious eye damage.
Ingestion	Causes digestive tract burns.
Symptoms related to the physical, chemical and toxicological characteristics	Burning pain and severe corrosive skin damage. Causes serious eye damage. Symptoms may include stinging, tearing, redness, swelling, and blurred vision. Permanent eye damage including blindness could result.

Information on toxicological effects

Acute toxicity

Product	Species	Test Results
CORRSHIELD MD4102 (CAS Mixture)		
Acute		
Dermal		
LD50	Rabbit	> 5000 mg/kg, (Estimated value)
Oral		
LD50	Rat	> 5000 mg/kg, (Estimated value)

Components	Species	Test Results
Morpholine (CAS 110-91-8)		
Acute		
Dermal		
LD50	Rabbit	504 mg/kg
Inhalation		
LC50	Rat	8 mg/l, 4 Hour
Oral		
LD50	Rat	1680 mg/kg

* Estimates for product may be based on additional component data not shown.

Skin corrosion/irritation	Causes severe skin burns and eye damage.
Serious eye damage/eye irritation	Causes serious eye damage.
Respiratory or skin sensitization	
Respiratory sensitization	This product is not expected to cause respiratory sensitization.
Skin sensitization	This product is not expected to cause skin sensitization.
Germ cell mutagenicity	No data available to indicate product or any components present at greater than 0.1% are mutagenic or genotoxic.
Carcinogenicity	Not classified.

ACGIH Carcinogens

Morpholine (CAS 110-91-8)	A4 Not classifiable as a human carcinogen.

Canada - Manitoba OELs: carcinogenicity

Morpholine (CAS 110-91-8)	Not classifiable as a human carcinogen.

IARC Monographs. Overall Evaluation of Carcinogenicity

Morpholine (CAS 110-91-8)	3 Not classifiable as to carcinogenicity to humans.

Reproductive toxicity	This product is not expected to cause reproductive or developmental effects.
Specific target organ toxicity - single exposure	Not classified.
Specific target organ toxicity - repeated exposure	Not classified.
Aspiration hazard	Based on available data, the classification criteria are not met.
Chronic effects	Prolonged inhalation may be harmful.

12. Ecological information

Ecotoxicity No ecotoxicity data noted for the ingredient(s).

Bioaccumulative potential

Partition coefficient n-octanol / water (log Kow)

Morpholine	-0.86

Mobility in soil No data available.

Other adverse effects Not available.

Persistence and degradability

13. Disposal considerations

Disposal instructions Collect and reclaim or dispose in sealed containers at licensed waste disposal site. Dispose of contents/container in accordance with local/regional/national/international regulations.

Local disposal regulations Dispose in accordance with all applicable regulations.

Waste from residues / unused products Dispose of in accordance with local regulations. Empty containers or liners may retain some product residues. This material and its container must be disposed of in a safe manner (see: Disposal instructions).

Contaminated packaging Since emptied containers may retain product residue, follow label warnings even after container is emptied. Empty containers should be taken to an approved waste handling site for recycling or disposal.

14. Transport information

TDG

Not regulated as dangerous goods.

The goods described above have been classified using a combination of testing, technical data, calculations and manufacturer knowledge in accordance with Part 2, Classification. TDG Classification is valid for road or rail transport only. For shipment by air or water, refer to IATA or IMDG regulations.

DOT

Not regulated as a dangerous good.

Some containers may be exempt from Dangerous Goods/Hazmat Transport Regulations, please check BOL for exact container classification.

IMDG

Not regulated as dangerous goods.

IATA

Not regulated as dangerous goods.

15. Regulatory information

Canadian regulations This product has been classified in accordance with the hazard criteria of the HPR and the SDS contains all the information required by the HPR.

Controlled Drugs and Substances Act

Not regulated.

Export Control List (CEPA 1999, Schedule 3)

Not listed.

Greenhouse Gases

Not listed.

Precursor Control Regulations

Not regulated.

Inventory status

Country(s) or region	Inventory name	On inventory (yes/no)*
Canada	Domestic Substances List (DSL)	No
Canada	Non-Domestic Substances List (NDSL)	No
United States & Puerto Rico	Toxic Substances Control Act (TSCA) Inventory	No

*A "Yes" indicates that all components of this product comply with the inventory requirements administered by the governing country(s)
A "No" indicates that one or more components of the product are not listed or exempt from listing on the inventory administered by the governing country(s).

16. Other information

Issue date Aug-11-2016

Revision date	Dec-17-2017
Version #	2.1
List of abbreviations	CAS: Chemical Abstract Service Registration Number TSRN indicates a Trade Secret Registry Number is used in place of the CAS number. ACGIH: American Conference of Governmental Industrial Hygienists NOEL: No Observed Effect Level STEL: Short Term Exposure Limit LC50: Lethal Concentration, 50% LD50: Lethal Dose, 50% TWA: Time Weighted Average BOD: Biochemical Oxygen Demand COD: Chemical Oxygen Demand TOC: Total Organic Carbon IATA: International Air Transport Association IMDG: International Maritime Dangerous Goods Code TLV: Threshold Limit Value
References:	No data available
Disclaimer	The information provided in this Safety Data Sheet is correct to the best of our knowledge, information and belief at the date of its publication. The information given is designed only as a guidance for safe handling, use, processing, storage, transportation, disposal and release and is not to be considered a warranty or quality specification. The information relates only to the specific material designated and may not be valid for such material used in combination with any other materials or in any process, unless specified in the text.

* Trademark of SUEZ. May be registered in one or more countries.

Specified Technical Sales Ltd.

OPERATING
AND
MAINTENANCE MANUAL

FOR

IQUALUIT WWTP UPGRADES

Specified Technical Sales Ltd.

JOB NAME: _____

DATE: _____

ADDRESS: _____

OPERATOR _____

SYSTEMS: _____

Specified Technical Sales Ltd.

SUEZ WATER CLOSED SYSTEM HOT WATER HEATING

TREATMENT:	**Corrshield MD4102** as per attached bulletin.
TREATMENT DOSAGE:	4 gallons per 1000 gallons in system. (4 litres/1000 litres)
CONTROL RANGE:	60 to 100 ppm (as molybdenum)
TEST KIT:	#6213 or STS-6213
TEST FREQUENCY:	Weekly until system stabilizes, then twice a month.
MAINTENANCE:	Boiler and/or converter heating systems are closed to the atmosphere and under pressure to prevent air entering the system. Air and water produces corrosion with most metals. All water supplies contain dissolved oxygen and when heated release air to the system(s). DO NOT blow down hot water boiler system(s) as this adds fresh make up water which releases air into the system(s) and increases total dissolved solids (EG: Calcium carbonate scale potential). Bleed system water sparingly for testing, removing low water cut off and boiler sediments and checking relief valves.
PRESSURE:	It is imperative that the highest heating unit and/or heating pipe has minimum pressure of +5 to +10 psi. (+35 to +70 kPa)
Calculating Desired Pressure:	Take elevation of pipe or equipment (in feet) above system pressure gauge divided by 2.3 = PSI plus 5 PSI for positive pressure at the top. OR: Take elevation of pipe or equipment (in metres) above system pressure gauge multiply by 9.81 = kPa plus 35 kPa for positive pressure at the top. This is the pressure gauge with no flow (circulators off). Do not drop automatic feed below 12 PSI (85 kPa) on low buildings.
AIR VENTS:	Check and clean automatic and manual air vents regularly.
AIR CUSHION TANK(S):	If tanks are not Extrol (bladder type) maintain 60 to 80% air in tank(s).

Molybdenum (Mo) Test Kit

1 drop = 2, 5, 20, or 50 ppm

STS-6213-TK

FOR BEST ACCURACY (1) ENSURE ACCURATE SAMPLE SIZE. (2) HOLD DROPPER BOTTLE VERTICALLY, NOT AT AN ANGLE.

Testing Tips:

- *Wear appropriate safety equipment.*
- *Read MSDS before use.*
- *Be sure there is adequate lighting during testing.*
- *Hold reagent bottles vertically for best results.*
- *Make sure you have an accurate sample.*

Kit Components:

STS-6213-B	*Molybdenum Buffer, 60 mL*
STS-6213-I	*Molybdenum Indicator, 60 mL*
STS-6213-T	*Molybdenum Titrating Sol., 60 mL*
SY-2005-P	*Syringe, 5 mL*
SY-2001-P	*Syringe, 1 mL*
VL-1005-V	*Vial, 10-50 mL*

EndPoint ID® Test Procedure +PLUS

1 Select a sample size based on the desired drop equivalency. Rinse and fill the vial with desired amount.

1 drop = 2 ppm	25 mL sample
1 drop = 5 ppm	10 mL sample
1 drop = 20 ppm	2.5 mL sample*
1 drop = 50 ppm	1.0 mL sample*

For 2.5 and 1.0 mL sample size: Use 5 mL syringe to add sample, then dilute to 10 mL with molybdenum free water.

2 Add 1 mL of Molybdenum Buffer (STS-6213-B) to the sample using the 1 mL syringe.

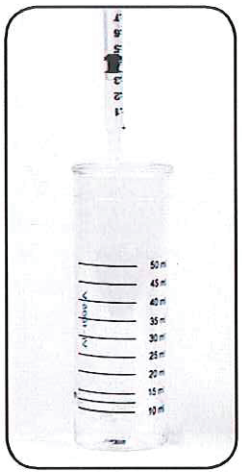

3 Add 10 drops of Molybdenum Indicator (STS-6213-I) and swirl to mix. The sample will turn red if molybdenum is present.

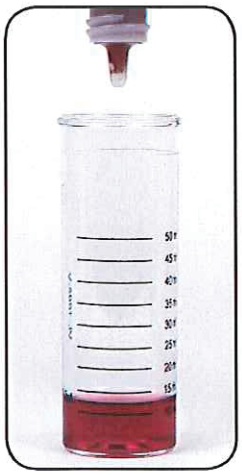

4 Add Molybdenum Titrating Solution (STS-6213-T) one drop at a time while swirling. Count the number of drops until the sample color changes from red to green and no further color change occurs.



5 Record your results by multiplying by the factor chosen in step 1.

# of drops x factor = ppm Molybdenum (Mo)

Note: To convert Molybdenum (Mo) to Molybdate (MoO_4), multiply by 1.7

Specified Technical Sales Ltd.

Specified Technical Sales Ltd.

LOG CHART FOR CORRSHIELD MD4102

DATE	P.P.M CORRSHIELD MD4102	pH	CONDUCTIVITY	CORRSHIELD MD4102 ADDED	EXP TANK	WATER METER	COMMENTS
	60-100 P.P.M	8.5 - 10.5	MMHOS 3600MAX	LITRES	1/2 -2/3		

Specified Technical Sales Ltd.

#214, 3750 46th Ave. SE Calgary AB T2B OL1
Tel (403) 253-2881
Fax (403) 253-7442
www.specified.ca

JOB: *CONTACTOR:* *DATE:*

SYSTEM: *TEST KIT USE:* *VOLUME:*

FQ7103 CLOSED SYSTEM CLEANING PROCEDURE

PART 1 - Add FQ7103 Cleaner (*Dosages:* 1L FQ7103 per every 100 L system volume)

1. Fill system with domestic water and establish circulation. Heat the system to maximum 60 degrees Celsius if possible.
2. After 2 hours of circulation, flush dirt legs until no solids are visible, while refilling to maintain the system pressure and circulation.
3. Dosage of closed loop system pipe cleaner **FQ7103** should now be added to the system via the pot feeder or pump, with the quantity determined by the system volume. Typical dosage of **1%** of total system volume is adequate for new installations.
4. Allow solution to circulate for 48 hours if cleaning is done while being heated, allow 72 hours of circulation on cold systems.
5. During the cleaning, periodically do hard short blow downs on low points in the system to remove any sediment accumulations.
6. **Take sample # 1** after the cleaner is completely mixed, before proceeding onto the next stage. Have Specified Technical Sales (STS) perform a laboratory analysis on the sample to confirm that sufficient cleaner has been added to the system. Confirmation that sufficient cleaner has been added to the system must first be received from STS prior to moving onto **PART 2**.

PART 2 – Thoroughly Flush the system to remove the cleaner

7. After the solution has adequately circulated and STS has confirmed that the recommended amount of FQ7103 is present, begin flushing. A gradual process of continuous bleed-off and make-up is recommended. Drain from the lowest available source, at the same rate as the system make-up. Observe the discharge.
8. When the effluent is clean and clear, matching the raw water quality, cease the bleed-off. Check for any remaining sediment or water loss at system drain valves.
9. **Take sample #2.** Have STS perform a laboratory test to confirm that the organo phosphonate levels within the sample show that sufficient FQ7103 cleaner has been removed from the system. (For a successful flush to have been performed < 4 ppm must be achieved). Confirmation that a satisfactory flush was completed must first be received from STS prior to moving onto **PART 3.**

PART 3 – Add Corrshield MD 4102/ Glycol to the system (*Dosages:4 liter per every 1000 liters of system volume)*

10. To provide passivation add the specified dosage of corrosion inhibitor (and glycol if required) as soon as possible, after confirming flush results. Circulate the entire system well to mix the inhibitor. Test the inhibitor concentration with the test kit provided. **Take sample #3**. Have STS perform a laboratory test to evaluate the inhibitor levels, pH, conductivity, and freeze point (if applicable). At this point STS will either provide a final written report confirming that the system is in good starting condition, or advise that insufficient inhibitor is present. If insufficient inhibitor is present an additional sample or samples will be required for laboratory analysis by STS until the recommended levels in the system are achieved. Only at the point where the inhibitor levels achieve the recommended control range criteria can a final written report be provided.
11. Install by-pass filter cartridge to remove any contaminants that remain. Monitor the filter flow and replace cartridge as necessary.
12. Before tying in a new system to an existing system take a sample of the existing system water and return it to STS, for chemical analysis for compatibility and an indication of systems chemical program integrity. **Label sample # 4 (Only if applicable)**

CUSTOMERS RESPONSIBILITIES

1. Customer shall provide STS with full details of the size of the system at the time of quotation for the job to enable an accurate and precise calculation to be made in consideration of the amount of FQ7103 cleaner that will be required to adequately clean the system.
2. Leaving raw water in the system for an extended period of time is not desirable as this may result in flash corrosion occurring in the system, so please submit each water sample to STS for testing without undue delay.

DISCLAIMER

The reports provided are based exclusively on the samples provided.

If at any time the above procedure is not followed or the customers responsibilities are not fulfilled, i.e. samples 1,2,or 3 are not received, all three samples are received at once at the conclusion of the cleaning procedure, samples are received a long time past the date that they were taken, etc; STS reserves the right to decline to issue a final written report attesting that the system is in good starting condition.

Water Technologies & Solutions
fact sheet

Ferroquest* FQ7103

neutral pH iron cleaner

description and use

- Removes rust, oil-based coating, organic debris
- Passivates steel surfaces
- Non-corrosive to base metal
- Safe in multimetal systems

description and use

Ferroquest* FQ7103 is a neutral pH cleaner which removes iron deposits, oil-based coatings, and organic debris from metal surfaces. Use of Ferroquest FQ7103 in new systems establishes system cleanliness and protection as the first step toward process efficiency and equipment longevity.

treatment and feeding requirements

Recirculate a 1% Ferroquest FQ7103 solution throughout the system for a minimum of 72 hours. After cleanout, rinse for 24 hours with fresh water, drain, and initiate system treatment. Ferroquest FQ7103 is best fed neat (undiluted) from the storage tank into the system. It can be introduced to the system by means of a chemical pump, bypass feeder or an inductor feeder.

general properties

Physical properties of Ferroquest FQ7103 are shown on the Material Safety Data Sheet, a copy of which is available upon request.

packaging information

Ferroquest FQ7103 is a liquid blend available in a variety of containers and delivery methods. Contact your SUEZ representative for details.

storage and handling

Protect from freezing. If this product is frozen during shipment or storage, slight mixing may be required to ensure homogeneity.

safety precautions

A Material Safety Data Sheet containing detailed information about this product is available upon request.

Find a contact near you by visiting www.suezwatertechnologies.com and clicking on "Contact Us."

*Trademark of SUEZ; may be registered in one or more countries.
©2017 SUEZ. All rights reserved.

CorrShield* MD4102

closed system corrosion inhibitor

- Excellent corrosion protection
- Low toxicity
- Highly buffered
- Easy to apply and control
- Compatible with most corrosion inhibitors

description and use

CorrShield MD4102 is a highly buffered, molybdate based corrosion inhibitor for use in multi-metal closed recirculating water systems that are subjected to air ingress contamination and/or trace acidic contaminants. This product also contains a scale inhibitor to retard the formation of objectionable deposits on high temperature heat exchange surfaces.

CorrShield MD4102 has a high buffering capacity which will maintain the pH of a closed water system in the desirable alkaline pH range, even in the presence of air ingress and/or trace acidic contaminants. Complete protection is provided against corrosion for ferrous and non-ferrous metals in both chilled and hot water heating systems.

treatment and feeding requirements

Maintain a molybdenum residual in the system as specified by your SUEZ representative. CorrShield MD4102 may be added full strength directly to the closed system by means of a by-pass feeder or chemical pump of standard construction. Inject chemical to suction side of recirculating pump or at any convenient location where good mixing is assured.

general properties

Physical properties of CorrShield MD4102 are shown on the Material safety Data Sheet (MSDS), a copy of which is available upon request.

packaging information

CorrShield MD4102 is available in a variety of containers and delivery methods. Contact your SUEZ representative for details.

storage

The product should be stored at moderate temperatures and protected from freezing. If frozen, thaw completely and mix thoroughly prior to use.

safety precautions

An MSDS containing detailed information about this product is available upon request.

Find a contact near you by visiting www.suezwatertechnologies.com and clicking on "Contact Us."

*Trademark of SUEZ; may be registered in one or more countries.
©2017 SUEZ. All rights reserved.

Specified Technical Sales Ltd.

LOG CHART FOR CORRSHIELD MD4102

DATE	P.P.M CORRSHIELD MD4102	pH	CONDUCTIVITY	CORRSHIELD MD4102 ADDED	EXP TANK	WATER METER	COMMENTS
	60-100 P.P.M	8.5 - 10.5	MMHOS 3600MAX	LITRES	1/2 -2/3		

Specified Technical Sales Ltd.

LOG CHART FOR CORRSHIELD MD4102

DATE	P.P.M CORRSHIELD MD4102	pH	CONDUCTIVITY	CORRSHIELD MD4102 ADDED	EXP TANK	WATER METER	COMMENTS
	60-100 P.P.M	8.5 - 10.5	MMHOS 3600MAX	LITRES	1/2 -2/3		

Specified Technical Sales Ltd.

LOG CHART FOR CORRSHIELD MD4102

DATE	P.P.M CORRSHIELD MD4102	pH	CONDUCTIVITY	CORRSHIELD MD4102 ADDED	EXP TANK	WATER METER	COMMENTS
	60-100 P.P.M	8.5 - 10.5	MMHOS 3600MAX	LITRES	1/2 -2/3		

Specified Technical Sales Ltd.

LOG CHART FOR CORRSHIELD MD4102

DATE	P.P.M CORRSHIELD MD4102	pH	CONDUCTIVITY	CORRSHIELD MD4102 ADDED	EXP TANK	WATER METER	COMMENTS
	60-100 P.P.M	8.5 - 10.5	MMHOS 3600MAX	LITRES	1/2 -2/3		

Specified Technical Sales Ltd.

LOG CHART FOR CORRSHIELD MD4102

DATE	P.P.M CORRSHIELD MD4102	pH	CONDUCTIVITY	CORRSHIELD MD4102 ADDED	EXP TANK	WATER METER	COMMENTS
	60-100 P.P.M	8.5 - 10.5	MMHOS 3600MAX	LITRES	1/2 -2/3		

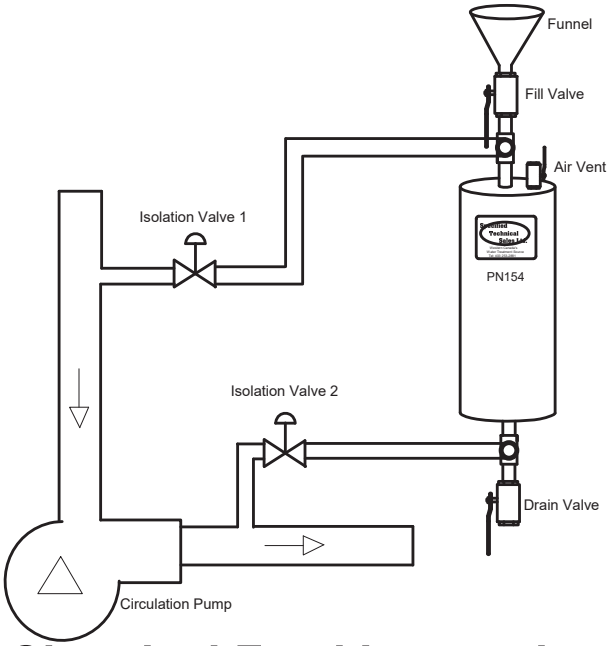

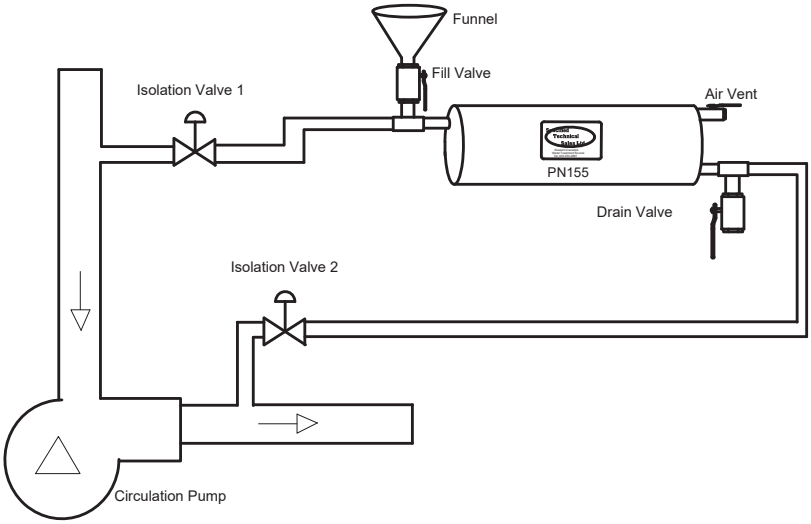

Chemical Feed Instructions

1. Close Isolation Valves 1&2
2. Open Drain Valve- verify that fluid is draining
3. Open Air Vent slowly
4. Open Fill Valve slowly
5. Allow chemical feeder to drain
6. Close Drain Valve
7. Pour required chemical into Funnel slowly
8. Close Air vent when feeder is full
9. Close Fill Valve
10. Open isoation Valves 1&2

Revisions

Specified Technical Sales Ltd.

Title: **STS Pot Feeder Quick Operations Guide**

Drawn by: Judith Vergara

Not To Scale

Date: April 2015

Drawing no. **GAD 20B**

Specified Technical Sales Ltd.

OPERATION & MAINTENANCE MANUAL

AXIOM SF100

AXIOM INDUSTRIES LIMITED

Installation, Operation & Maintenance Instructions for SF Series Solution Feeders

Axiom Industries Ltd.
2615 Wentz Avenue
Saskatoon, SK
S7K 5J1
Ph: (306) 651-1815
Fax: (306) 242-3373
Email: sales@axiomind.com

Once the system is filled to the correct pressure, ensure that there is an adequate level of fluid (we recommend about 2/3 full) in the storage tank and record the fluid level. The SF100 will now feed solution automatically to maintain the desired system pressure. **The SF100 or SF100-HP has a 55 gallon (208 litre) tank and the SF100L or SF100-HP-L has a 100 gallon (383 litre) tank.**

The diverting valve, which is accessible through the hole on the left hand side of the cover, can be used to agitate or mix the solution in the tank. Turn the valve handle so that it is vertical - the pump will start automatically and re-circulate the solution back into the tank. When the solution is adequately mixed, turn the valve handle back to horizontal. The pump will re-charge the pressure tank and shut off automatically.

Maintenance Instructions

Periodically check the fluid level in the storage tank, and visually examine the SF100 to ensure that it is clean and that all joints are tight. There is a strainer on the bottom of the suction hose inside the tank that should be checked monthly.

Solution Feeder Limited Warranty

AXIOM Solution Feeder are warranted to be free of defects in material and workmanship under normal use, for a period of one (1) year from the date of manufacture, or one (1) year of use, with proof of purchase. This limited warranty will not exceed two (2) years, in any event.

The limited warranty will not apply to pumps that were improperly installed, misapplied, or incompatible with fluids or components not manufactured by AXIOM. Pump failure due to foreign debris is not covered under the terms of this limited warranty. AXIOM will not warrant any pump, which is damaged or modified outside the AXIOM factory.

Returns are to be shipped postage prepaid to AXIOM Industries. AXIOM shall not be liable for freight damage incurred during shipping, package returns carefully.

AXIOM's obligation under this warranty policy is limited to the repair or replacement of the pump/product. All returns will be tested per AXIOM factory criteria. Products found not defective (under the terms of this limited warranty) are subject to charges paid by the returnee for the testing and packaging of "tested good" non-warranty returns.

No credit or labor allowances will be given for pumps or products returned as defective. Warranty replacements will be shipped on a freight allowed basis. AXIOM reserves the right to choose the method of transportation.

This limited warranty is in lieu of all other warranties, expressed or implied, and no other person is authorized to give any other warranty or assume obligation or liability on AXIOM's behalf. AXIOM shall not be liable for any labor, damage or other expense, nor shall AXIOM be liable for any indirect, incidental or consequential damages of any kind incurred by the reason of the use of sale of any defective product or part. This limited warranty covers products distributed within Canada and the USA. Other world market areas should consult with the distributor for any deviation from this document

WILKINS
A ZURN COMPANY

SPECIFICATION SUBMITTAL SHEET

Model BR4

Water Pressure Reducing Valve

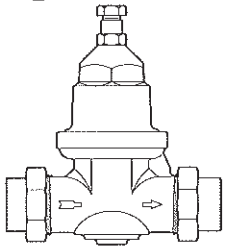

FEATURES

Sizes: ❑ ½" ❑ ¾" ❑ 1"

Maximum working water pressure	400 psi
Maximum working water temperature	180°F
Reduced pressure range	15 to 150 psi
Factory preset	50 psi
Threaded connections (FNPT)	ANSI B1.20.1
Copper connections (FC)	ANSI B16.22

OPTIONS

(Suffixes can be combined)

- ❑ - with single union FNPT connection (standard)
- ❑ C - with FC (copper sweat) union connection
- ❑ DU - with double union connection (FNPT)
- ❑ EC - with integral pressure relief valve for water thermal expansion control
- ❑ LU - with integral FNPT connection (no union)
- ❑ PEX - with male barbed connection tailpiece for crossed-linked polyethylene tubing
- ❑ SC - with stainless steel adustment bolt and lock nut for below-ground installations
- ❑ P - tapped and plugged for gauge

ACCESSORIES

- ❑ Repair kit
- ❑ BR4DUSPC special plastic spacer nipple for use with BR4DU (½", ¾" & 1 ¼")
- ❑ 70DUSPC special plastic spacer nipple for use with 70DU (¾", 1" & 1 ¼") and BR4DU (1")
- ❑ SCR In-line strainer screen for DUSPC
- ❑ TPK Tailpiece kit

APPLICATION

Designed for installation on potable water lines to reduce high inlet pressure to a lower outlet pressure. The integral strainer makes this device most suitable for residential and commercial water systems that require frequent cleaning of sediment and debris. The balance piston design enables the regulator to react in a smooth and responsive manner to changes in system flow demand, while at the same time, providing protection from inlet pressure changes.

STANDARDS COMPLIANCE

- ❑ ASSE® Listed 1003
- ❑ IAPMO® Listed
- ❑ CSA® Certified
- ❑ City of Los Angeles Approved

MATERIALS

Main valve body	Cast bronze ASTM B 584
Bell housing	UV resistant polymer composite
Internals	Stainless steel, 300 Series
Stem	Brass ASTM B 16
Elastomers	EPDM (FDA approved) Buna nitrile (FDA approved)
Cartridge	Delrin™ (NSF Listed)
Springs	Hard drawn wire, ASTM A 227

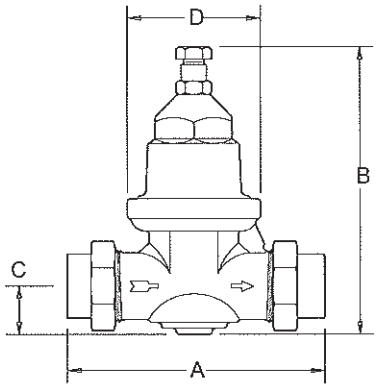

DIMENSIONS & WEIGHTS (do not include pkg.)

SIZE		CONNECTIONS	DIMENSIONS (approximate)								WEIGHT	
			A		B		C		D			
in.	mm		in.	mm	in.	mm	in.	mm	in.	mm	lbs.	kg.
1/2	15	SINGLE UNION	4 3/8	111	6 1/4	159	1 1/8	29	2 1/2	64	3	1.5
1/2	15	LESS UNION	3 1/2	89	6 1/4	159	1 1/8	29	2 1/2	64	3	1.5
1/2	15	DOUBLE UNION	5 1/4	133	6 1/4	159	1 1/8	29	2 1/2	64	3	1.5
3/4	20	SINGLE UNION	4 7/16	113	6 1/4	159	1 1/8	29	2 1/2	64	3	1.5
3/4	20	LESS UNION	3 1/2	89	6 1/4	159	1 1/8	29	2 1/2	64	3	1.5
3/4	20	DOUBLE UNION	5 3/8	137	6 1/4	159	1 1/8	29	2 1/2	64	3	1.5
1	25	SINGLE UNION	4 15/16	125	7 3/4	197	1 3/16	30	3	76	4	2.0
1	25	LESS UNION	4	102	7 3/4	197	1 3/16	30	3	76	4	2.0
1	25	DOUBLE UNION	5 15/16	151	7 3/4	197	1 3/16	30	3	76	4	2.0

DOCUMENT NO. REG-BR4(SM) REV. 5/00

AXIOM INDUSTRIES LIMITED

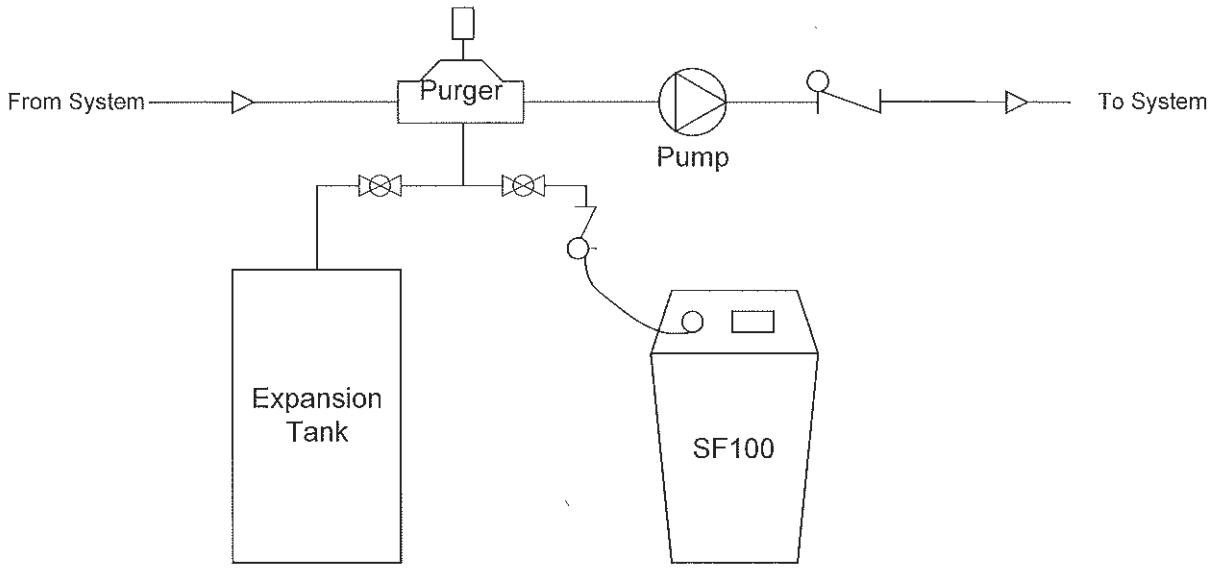

Connection Schematic - SF100 Packaged System Feeder

AXIOM INDUSTRIES LIMITED

SF100 Installation Instructions for the RIA10-1-SAA Control Panel

1. Mount the RIA10-1-SAA control panel on a wall next to the SF100 Glycol Feed System.
2. Cut the plug-in end of the tank float cord
3. Push the float cable through strain relief fitting in control panel and connect float wires to terminals 1 and 2 on terminal strip. Connect ground wire to ground connection. Tighten strain relief nut to secure cable into panel.
4. Connect DCS wiring to remote alarm dry contacts as requested to provide alarm signal.
5. To disable the audible alarm, remove the jumper on the control board.
6. Plug pump cord into RIA10-1-SAA panel.

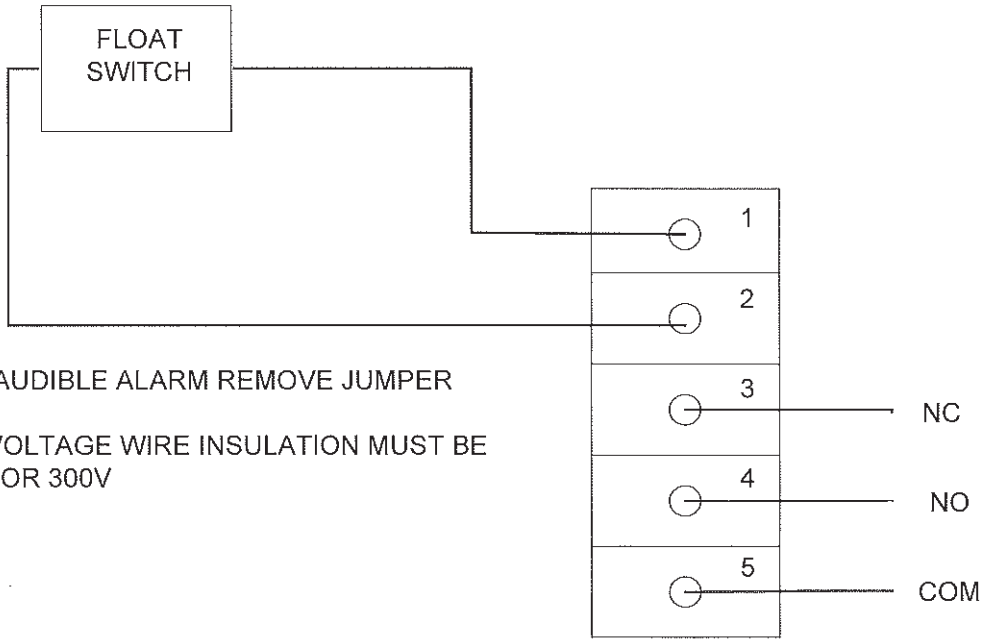

TO DISABLE AUDIBLE ALARM REMOVE JUMPER

NOTE: LOW VOLTAGE WIRE INSULATION MUST BE APPROVED FOR 300V

System pressure to high	Pressure switch not adjusted to proper setpoint	Adjust pressure switch, refer to maintenance manual for instructions
	PRV adjusted to high pressure	Loosen jam nut and adjust hex screw counter clockwise to decrease system pressure
	PRV fast fill valve open	Move fast fill lever to vertical position
	PRV plugged	Open bottom, remove screen if it is still there and clean thoroughly

Pump Cycles Continually	Air is being removed from system and pump is only making up fluid	No action required
	Leak in system	Inspect system and repair leak
	Bladder in expansion tank is broken	Replace expansion tank

Specified Technical Sales Ltd.

M.S.D.S

SAFETY DATA SHEET
FERROQUEST* FQ7103

1. Identification

Product identifier	**FERROQUEST FQ7103**
Other means of identification	None.
Version #	1.1
Prepared by	This SDS has been prepared by SUEZ Regulatory Department (1-215-355-3300).
Revision date	Dec-17-2017
Supersedes date	Aug-01-2016
Recommended use	Cleaner
Recommended restrictions	None known.

Company/undertaking identification

SUEZ Water Technologies & Solutions Canada
3239 Dundas Street West
Oakville, Ontario, L6M 4B2
T 905-465-3030

Emergency telephone

(800) 877-1940

2. Hazard(s) identification

Physical hazards	Not classified.	
Health hazards	Serious eye damage/eye irritation	Category 2
	Specific target organ toxicity, single exposure	Category 3 respiratory tract irritation

Label elements



Signal word	Warning
Hazard statement	Causes serious eye irritation. May cause respiratory irritation.
Precautionary statement	
Prevention	Avoid breathing mist or vapor. Wash thoroughly after handling. Use only outdoors or in a well-ventilated area. Wear eye protection/face protection.
Response	IF INHALED: Remove person to fresh air and keep comfortable for breathing. IF IN EYES: Rinse cautiously with water for several minutes. Remove contact lenses, if present and easy to do. Continue rinsing. Call a poison center/doctor if you feel unwell. If eye irritation persists: Get medical advice/attention.
Storage	Store in a well-ventilated place. Keep container tightly closed. Store locked up.
Disposal	Dispose of contents/container in accordance with local/regional/national/international regulations.
Other hazards	None known.
Supplemental information	None.

3. Composition/information on ingredients

Mixtures

Components	CAS #	Percent (wt/wt)
PHOSPHATE ESTER POTASSIUM SALT	66057-30-5	2.5 - 10
Sodium sulphite	7757-83-7	2.5 - 10

Composition comments Information for specific product ingredients as required by the WHMIS Regulations is listed. Refer to additional sections of this SDS for our assessment of the potential hazards of this formulation.

4. First-aid measures

Inhalation Remove victim to fresh air and keep at rest in a position comfortable for breathing. Call a POISON CENTER or doctor/physician if you feel unwell.

Skin contact Wash off with soap and water. Get medical attention if irritation develops and persists.

Eye contact Immediately flush eyes with plenty of water for at least 15 minutes. Remove contact lenses, if present and easy to do. Continue rinsing. If eye irritation persists: Get medical advice/attention.

Ingestion Rinse mouth. Get medical attention if symptoms occur.

Most important symptoms/effects, acute and delayed Severe eye irritation. Symptoms may include stinging, tearing, redness, swelling, and blurred vision. May cause respiratory irritation.

Indication of immediate medical attention and special treatment needed Provide general supportive measures and treat symptomatically. Keep victim under observation. Symptoms may be delayed.

General information If you feel unwell, seek medical advice (show the label where possible). Ensure that medical personnel are aware of the material(s) involved, and take precautions to protect themselves.

5. Fire-fighting measures

Suitable extinguishing media Water fog. Foam. Dry chemical powder. Carbon dioxide (CO2).

Unsuitable extinguishing media Do not use water jet as an extinguisher, as this will spread the fire.

Specific hazards arising from the chemical During fire, gases hazardous to health may be formed.

Special protective equipment and precautions for firefighters Wear full protective clothing, including helmet, self-contained positive pressure or pressure demand breathing apparatus, protective clothing and face mask.

Fire fighting equipment/instructions In case of fire and/or explosion do not breathe fumes. Use standard firefighting procedures and consider the hazards of other involved materials. Move containers from fire area if you can do so without risk. Cool containers / tanks with water spray.

Specific methods Use standard firefighting procedures and consider the hazards of other involved materials.

General fire hazards No unusual fire or explosion hazards noted.

6. Accidental release measures

Personal precautions, protective equipment and emergency procedures Keep unnecessary personnel away. Keep people away from and upwind of spill/leak. Wear appropriate protective equipment and clothing during clean-up. Avoid breathing mist or vapor. Do not touch damaged containers or spilled material unless wearing appropriate protective clothing. Ensure adequate ventilation. Local authorities should be advised if significant spillages cannot be contained. For personal protection, see section 8 of the SDS.

Methods and materials for containment and cleaning up Large Spills: Stop the flow of material, if this is without risk. Dike the spilled material, where this is possible. Absorb in vermiculite, dry sand or earth and place into containers. Following product recovery, flush area with water.

Small Spills: Wipe up with absorbent material (e.g. cloth, fleece). Clean surface thoroughly to remove residual contamination.

Never return spills to original containers for re-use. For waste disposal, see section 13 of the SDS.

Environmental precautions Avoid discharge into drains, water courses or onto the ground.

7. Handling and storage

Precautions for safe handling Avoid breathing mist or vapor. Avoid contact with eyes. Provide adequate ventilation. Wear appropriate personal protective equipment. Observe good industrial hygiene practices.

Conditions for safe storage, including any incompatibilities Store locked up. Store in original tightly closed container. Store away from incompatible materials (see Section 10 of the SDS). Protect from freezing. If frozen, thaw and mix completely prior to use.

8. Exposure controls/personal protection

Occupational exposure limits	No exposure limits noted for ingredient(s).
Biological limit values	No biological exposure limits noted for the ingredient(s).
Appropriate engineering controls	Good general ventilation (typically 10 air changes per hour) should be used. Ventilation rates should be matched to conditions. If applicable, use process enclosures, local exhaust ventilation, or other engineering controls to maintain airborne levels below recommended exposure limits. If exposure limits have not been established, maintain airborne levels to an acceptable level. Provide eyewash station. Good general ventilation should be used. Ventilation rates should be matched to conditions. If applicable, use process enclosures, local exhaust ventilation, or other engineering controls to maintain airborne levels below recommended exposure limits. If exposure limits have not been established, maintain airborne levels to an acceptable level.

Individual protection measures, such as personal protective equipment

Eye/face protection	Wear safety glasses with side shields (or goggles).
Skin protection	
Hand protection	Wear appropriate chemical resistant gloves. The choice of an appropriate glove does not only depend on its material but also on other quality features and is different from one producer to the other. Suitable gloves can be recommended by the glove supplier. Glove selection must take into account any solvents and other hazards present.
Other	Wear suitable protective clothing.
Respiratory protection	If engineering controls do not maintain airborne concentrations below recommended exposure limits (where applicable) or to an acceptable level (in countries where exposure limits have not been established), an approved respirator must be worn.
Thermal hazards	Wear appropriate thermal protective clothing, when necessary.
General hygiene considerations	Always observe good personal hygiene measures, such as washing after handling the material and before eating, drinking, and/or smoking. Routinely wash work clothing and protective equipment to remove contaminants.

9. Physical and chemical properties

Appearance	Liquid
Color	Colorless to light yellow
Odor	Slight
pH (concentrated product)	5.9 Neat
Initial boiling point and boiling range	216 °F (102 °C)
Flash point	> 199 °F (> 93 °C) P-M(CC)
Evaporation rate	Slower than Ether
Flammability (solid, gas)	Not applicable.
Upper/lower flammability or explosive limits	
Explosive limit - lower (%)	Not available.
Explosive limit - upper (%)	Not available.
Vapor pressure	18 mmHg
Vapor pressure temp.	70 °F (21 °C)
Vapor density	< 1
Relative density	1.12
Relative density temperature	70 °F (21 °C)
Solubility(ies)	
Solubility (water)	100 %
Viscosity	20 mPa.s
Viscosity temperature	70 °F (21 °C)
Other information	
Explosive properties	Not explosive.
Oxidizing properties	Not oxidizing.
Pour point	31 °F (-1 °C)
Specific gravity	1.122
VOC	0 % CALCULATED

10. Stability and reactivity

Reactivity	The product is stable and non-reactive under normal conditions of use, storage and transport.
Chemical stability	Material is stable under normal conditions.
Possibility of hazardous reactions	Hazardous polymerization does not occur.
Conditions to avoid	Avoid temperatures exceeding the flash point. Contact with incompatible materials.
Incompatible materials	Strong oxidizing agents.
Hazardous decomposition products	Oxides of carbon, nitrogen, phosphorus, and sulphur evolved in fire.

11. Toxicological information

Information on likely routes of exposure

Inhalation	May cause irritation to the respiratory system.
Skin contact	Prolonged or repeated contact may cause irritation.
Eye contact	Causes serious eye irritation.
Ingestion	Expected to be a low ingestion hazard.
Symptoms related to the physical, chemical and toxicological characteristics	Severe eye irritation. Symptoms may include stinging, tearing, redness, swelling, and blurred vision. May cause respiratory irritation.

Information on toxicological effects

Acute toxicity May cause respiratory irritation.

Product	Species	Test Results
FERROQUEST FQ7103 (CAS Mixture)		
Acute		
Dermal		
LD50	Rabbit	> 5000 mg/kg, (Calculated according to GHS additivity formula)
Oral		
LD50	Rat	> 5000 mg/kg, (Calculated according to GHS additivity formula)

Components	Species	Test Results
Sodium sulphite (CAS 7757-83-7)		
Acute		
Dermal		
LD50	Rabbit	> 2000 mg/kg
Inhalation		
LC50	Rat	> 5.5 mg/l, 4 Hour
Oral		
LD50	Rat	2610 mg/kg

* Estimates for product may be based on additional component data not shown.

Skin corrosion/irritation	Prolonged skin contact may cause temporary irritation.
Serious eye damage/eye irritation	Causes serious eye irritation.

Respiratory or skin sensitization

Respiratory sensitization	This product is not expected to cause respiratory sensitization.
Skin sensitization	This product is not expected to cause skin sensitization.
Germ cell mutagenicity	No data available to indicate product or any components present at greater than 0.1% are mutagenic or genotoxic.
Carcinogenicity	Not classified.

IARC Monographs. Overall Evaluation of Carcinogenicity

Sodium sulphite (CAS 7757-83-7) 3 Not classifiable as to carcinogenicity to humans.

Reproductive toxicity This product is not expected to cause reproductive or developmental effects.

Specific target organ toxicity - single exposure	May cause respiratory irritation.
Specific target organ toxicity - repeated exposure	Not classified.
Aspiration hazard	Based on available data, the classification criteria are not met.

12. Ecological information

Ecotoxicity

Product		Species	Test Results
FERROQUEST FQ7103 (CAS Mixture)			
	0% Mortality	Fathead Minnow	2000 mg/L, Static Renewal Bioassay, 96 hour
Aquatic			
Crustacea	0% Mortality	Daphnia magna	845 mg/L, Static Renewal Bioassay, 48 hour
	30% Mortality	Daphnia magna	1300 mg/L, Static Renewal Bioassay, 48 hour

Bioaccumulative potential	No data available.
Mobility in soil	No data available.
Other adverse effects	Not available.
Persistence and degradability	No data is available on the degradability of this product.

13. Disposal considerations

Disposal instructions	Collect and reclaim or dispose in sealed containers at licensed waste disposal site. Dispose of contents/container in accordance with local/regional/national/international regulations.
Local disposal regulations	Dispose in accordance with all applicable regulations.
Waste from residues / unused products	Dispose of in accordance with local regulations. Empty containers or liners may retain some product residues. This material and its container must be disposed of in a safe manner (see: Disposal instructions).
Contaminated packaging	Since emptied containers may retain product residue, follow label warnings even after container is emptied. Empty containers should be taken to an approved waste handling site for recycling or disposal.

14. Transport information

TDG

Not regulated as dangerous goods.

The goods described above have been classified using a combination of testing, technical data, calculations and manufacturer knowledge in accordance with Part 2, Classification. TDG Classification is valid for road or rail transport only. For shipment by air or water, refer to IATA or IMDG regulations.

DOT

Not regulated as a dangerous good.

Some containers may be exempt from Dangerous Goods/Hazmat Transport Regulations, please check BOL for exact container classification.

IMDG

Not regulated as dangerous goods.

IATA

Not regulated as dangerous goods.

15. Regulatory information

Canadian regulations

Controlled Drugs and Substances Act

Not regulated.

Export Control List (CEPA 1999, Schedule 3)

Not listed.

Greenhouse Gases

Not listed.

Precursor Control Regulations

Not regulated.

Inventory status

Country(s) or region	Inventory name	On inventory (yes/no)*
Canada	Domestic Substances List (DSL)	No
Canada	Non-Domestic Substances List (NDSL)	Yes
United States & Puerto Rico	Toxic Substances Control Act (TSCA) Inventory	Yes

*A "Yes" indicates that all components of this product comply with the inventory requirements administered by the governing country(s)
A "No" indicates that one or more components of the product are not listed or exempt from listing on the inventory administered by the governing country(s).

16. Other information

Issue date Aug-01-2016

Revision date Dec-17-2017

Version # 1.1

List of abbreviations

CAS: Chemical Abstract Service Registration Number
ACGIH: American Conference of Governmental Industrial Hygienists
TWA: Time Weighted Average
STEL: Short Term Exposure Limit
LD50: Lethal Dose, 50%
LC50: Lethal Concentration, 50%
NOEL: No Observed Effect Level
COD: Chemical Oxygen Demand
BOD: Biochemical Oxygen Demand
TOC: Total Organic Carbon
TSRN indicates a Trade Secret Registry Number is used in place of the CAS number.
IATA: International Air Transport Association
IMDG: International Maritime Dangerous Goods Code
TLV: Threshold Limit Value

References: No data available

Disclaimer

The information provided in this Safety Data Sheet is correct to the best of our knowledge, information and belief at the date of its publication. The information given is designed only as a guidance for safe handling, use, processing, storage, transportation, disposal and release and is not to be considered a warranty or quality specification. The information relates only to the specific material designated and may not be valid for such material used in combination with any other materials or in any process, unless specified in the text.

Revision information

Composition / Information on Ingredients: Ingredients
Exposure controls/personal protection: Exposure guidelines

* Trademark of SUEZ. May be registered in one or more countries.

SAFETY DATA SHEET
CORRSHIELD* MD4102

1. Identification

Product identifier	**CORRSHIELD MD4102**
Other means of identification	None.
Version #	2.1
Prepared by	This SDS has been prepared by SUEZ Regulatory Department (1-215-355-3300).
Revision date	Dec-17-2017
Supersedes date	Oct-23-2017
Recommended use	Water-based corrosion inhibitor
Recommended restrictions	None known.

Company/undertaking identification

SUEZ Water Technologies & Solutions Canada
3239 Dundas Street West
Oakville, Ontario, L6M 4B2
T 905-465-3030

Emergency telephone

(800) 877-1940

2. Hazard(s) identification

Physical hazards	Not classified.	
Health hazards	Skin corrosion/irritation	Category 1B
	Serious eye damage/eye irritation	Category 1

Label elements



Signal word	Danger
Hazard statement	Causes severe skin burns and eye damage. Causes serious eye damage.
Precautionary statement	
Prevention	Do not breathe mist or vapor. Wash thoroughly after handling. Wear eye protection/face protection.
Response	IF SWALLOWED: Rinse mouth. Do NOT induce vomiting. IF ON SKIN (or hair): Take off immediately all contaminated clothing. Rinse skin with water. IF INHALED: Remove person to fresh air and keep comfortable for breathing. IF IN EYES: Rinse cautiously with water for several minutes. Remove contact lenses, if present and easy to do. Continue rinsing. Immediately call a POISON CENTER/doctor. Wash contaminated clothing before reuse.
Storage	Store locked up.
Disposal	Dispose of contents/container in accordance with local/regional/national/international regulations.
Other hazards	None known.
Supplemental information	None.

3. Composition/information on ingredients

Mixtures

Components	CAS #	Percent (wt/wt)
Boric Acid (hbo2), Sodium Salt, Dihydrate	16800-11-6	2.5 - 10
Morpholine	110-91-8	2.5 - 10

Composition comments Information for specific product ingredients as required by the WHMIS Regulations is listed. Refer to additional sections of this SDS for our assessment of the potential hazards of this formulation.

4. First-aid measures

Inhalation Move to fresh air. Call a physician if symptoms develop or persist.

Skin contact Take off immediately all contaminated clothing. Rinse skin with water/shower. Call a physician or poison control center immediately. Chemical burns must be treated by a physician. Wash contaminated clothing before reuse.

Eye contact Immediately flush eyes with plenty of water for at least 15 minutes. Remove contact lenses, if present and easy to do. Continue rinsing. Call a physician or poison control center immediately.

Ingestion Call a physician or poison control center immediately. Rinse mouth. Do not induce vomiting. If vomiting occurs, keep head low so that stomach content doesn't get into the lungs.

Most important symptoms/effects, acute and delayed Burning pain and severe corrosive skin damage. Causes serious eye damage. Symptoms may include stinging, tearing, redness, swelling, and blurred vision. Permanent eye damage including blindness could result.

Indication of immediate medical attention and special treatment needed Provide general supportive measures and treat symptomatically. Chemical burns: Flush with water immediately. While flushing, remove clothes which do not adhere to affected area. Call an ambulance. Continue flushing during transport to hospital. Keep victim under observation. Symptoms may be delayed.

General information Ensure that medical personnel are aware of the material(s) involved, and take precautions to protect themselves.

5. Fire-fighting measures

Suitable extinguishing media Water fog. Foam. Dry chemical powder. Carbon dioxide (CO2).

Unsuitable extinguishing media Do not use water jet as an extinguisher, as this will spread the fire.

Specific hazards arising from the chemical During fire, gases hazardous to health may be formed.

Special protective equipment and precautions for firefighters Wear full protective clothing, including helmet, self-contained positive pressure or pressure demand breathing apparatus, protective clothing and face mask.

Fire fighting equipment/instructions In case of fire and/or explosion do not breathe fumes. Use standard firefighting procedures and consider the hazards of other involved materials. Move containers from fire area if you can do so without risk. Cool containers / tanks with water spray.

Specific methods Use standard firefighting procedures and consider the hazards of other involved materials.

General fire hazards No unusual fire or explosion hazards noted.

6. Accidental release measures

Personal precautions, protective equipment and emergency procedures Keep unnecessary personnel away. Keep people away from and upwind of spill/leak. Wear appropriate protective equipment and clothing during clean-up. Do not breathe mist or vapor. Do not touch damaged containers or spilled material unless wearing appropriate protective clothing. Ensure adequate ventilation. Local authorities should be advised if significant spillages cannot be contained. For personal protection, see section 8 of the SDS.

Methods and materials for containment and cleaning up Large Spills: Stop the flow of material, if this is without risk. Dike the spilled material, where this is possible. Absorb in vermiculite, dry sand or earth and place into containers. Following product recovery, flush area with water.

Small Spills: Wipe up with absorbent material (e.g. cloth, fleece). Clean surface thoroughly to remove residual contamination.

Never return spills to original containers for re-use. For waste disposal, see section 13 of the SDS.

Environmental precautions Avoid discharge into drains, water courses or onto the ground.

7. Handling and storage

Precautions for safe handling Do not breathe mist or vapor. Do not get in eyes, on skin, or on clothing. Avoid prolonged exposure. Provide adequate ventilation. Wear appropriate personal protective equipment. Observe good industrial hygiene practices.

Conditions for safe storage, including any incompatibilities Store locked up. Store in original tightly closed container. Store away from incompatible materials (see Section 10 of the SDS).

8. Exposure controls/personal protection

Occupational exposure limits

US. ACGIH Threshold Limit Values

Components	Type	Value
Morpholine (CAS 110-91-8)	TWA	20 ppm

Canada. Alberta OELs (Occupational Health & Safety Code, Schedule 1, Table 2)

Components	Type	Value
Morpholine (CAS 110-91-8)	TWA	71 mg/m3 20 ppm

Canada. British Columbia OELs. (Occupational Exposure Limits for Chemical Substances, Occupational Health and Safety Regulation 296/97, as amended)

Components	Type	Value
Morpholine (CAS 110-91-8)	TWA	20 ppm

Canada. Manitoba OELs (Reg. 217/2006, The Workplace Safety And Health Act)

Components	Type	Value
Morpholine (CAS 110-91-8)	TWA	20 ppm

Canada. Ontario OELs. (Control of Exposure to Biological or Chemical Agents)

Components	Type	Value
Morpholine (CAS 110-91-8)	TWA	20 ppm

Canada. Quebec OELs. (Ministry of Labor - Regulation Respecting the Quality of the Work Environment)

Components	Type	Value
Morpholine (CAS 110-91-8)	TWA	71 mg/m3 20 ppm

Biological limit values No biological exposure limits noted for the ingredient(s).

Exposure guidelines

Canada - Alberta OELs: Skin designation
Morpholine (CAS 110-91-8) Can be absorbed through the skin.

Canada - British Columbia OELs: Skin designation
Morpholine (CAS 110-91-8) Can be absorbed through the skin.

Canada - Manitoba OELs: Skin designation
Morpholine (CAS 110-91-8) Can be absorbed through the skin.

Canada - Ontario OELs: Skin designation
Morpholine (CAS 110-91-8) Can be absorbed through the skin.

Canada - Quebec OELs: Skin designation
Morpholine (CAS 110-91-8) Can be absorbed through the skin.

Canada - Saskatchewan OELs: Skin designation
Morpholine (CAS 110-91-8) Can be absorbed through the skin.

US ACGIH Threshold Limit Values: Skin designation
Morpholine (CAS 110-91-8) Can be absorbed through the skin.

Appropriate engineering controls Good general ventilation (typically 10 air changes per hour) should be used. Ventilation rates should be matched to conditions. If applicable, use process enclosures, local exhaust ventilation, or other engineering controls to maintain airborne levels below recommended exposure limits. If exposure limits have not been established, maintain airborne levels to an acceptable level. Eye wash facilities and emergency shower must be available when handling this product. Good general ventilation should be used. Ventilation rates should be matched to conditions. If applicable, use process enclosures, local exhaust ventilation, or other engineering controls to maintain airborne levels below recommended exposure limits. If exposure limits have not been established, maintain airborne levels to an acceptable level.

Individual protection measures, such as personal protective equipment

Eye/face protection Splash proof chemical goggles. Face shield.

Skin protection

Hand protection Wear appropriate chemical resistant gloves. The choice of an appropriate glove does not only depend on its material but also on other quality features and is different from one producer to the other. Glove selection must take into account any solvents and other hazards present.

Other Wear appropriate chemical resistant clothing.

Respiratory protection	If engineering controls do not maintain airborne concentrations below recommended exposure limits (where applicable) or to an acceptable level (in countries where exposure limits have not been established), an approved respirator must be worn.
Thermal hazards	Wear appropriate thermal protective clothing, when necessary.
General hygiene considerations	Always observe good personal hygiene measures, such as washing after handling the material and before eating, drinking, and/or smoking. Routinely wash work clothing and protective equipment to remove contaminants.

9. Physical and chemical properties

Appearance	Liquid
Color	Colorless to light yellow
Odor	Slight
Odor threshold	Not available.
pH (concentrated product)	10.5
Melting point/freezing point	25 °F (-4 °C)
Initial boiling point and boiling range	212 °F (100 °C)
Flash point	> 200 °F (> 93 °C) P-M(CC)
Evaporation rate	< 1 (Ether = 1)
Flammability (solid, gas)	Not applicable.
Upper/lower flammability or explosive limits	
Flammability limit - lower (%)	Not available.
Flammability limit - upper (%)	Not available.
Explosive limit - lower (%)	Not available.
Explosive limit - upper (%)	Not available.
Vapor pressure	18 mm Hg
Vapor pressure temp.	70 °F (21 °C)
Vapor density	< 1 (Air = 1)
Relative density	1.09
Relative density temperature	70 °F (21 °C)
Solubility(ies)	
Solubility (water)	100 %
Partition coefficient (n-octanol/water)	Not available.
Auto-ignition temperature	Not available.
Decomposition temperature	Not available.
Viscosity	10 cps
Viscosity temperature	70 °F (21 °C)
Other information	
Explosive properties	Not explosive.
Oxidizing properties	Not oxidizing.
Pour point	30 °F (-1 °C)
Specific gravity	1.091
VOC	5 % (Calculated)

10. Stability and reactivity

Reactivity	The product is stable and non-reactive under normal conditions of use, storage and transport.
Chemical stability	Material is stable under normal conditions.
Possibility of hazardous reactions	Hazardous polymerization does not occur.
Conditions to avoid	Avoid temperatures exceeding the flash point. Contact with incompatible materials.
Incompatible materials	Strong acids. Strong oxidizing agents.

Hazardous decomposition products	Elemental oxides.

11. Toxicological information

Information on likely routes of exposure

Inhalation	May cause irritation to the respiratory system. Prolonged inhalation may be harmful.
Skin contact	Causes severe skin burns.
Eye contact	Causes serious eye damage.
Ingestion	Causes digestive tract burns.
Symptoms related to the physical, chemical and toxicological characteristics	Burning pain and severe corrosive skin damage. Causes serious eye damage. Symptoms may include stinging, tearing, redness, swelling, and blurred vision. Permanent eye damage including blindness could result.

Information on toxicological effects

Acute toxicity

Product	Species	Test Results
CORRSHIELD MD4102 (CAS Mixture)		
Acute		
Dermal		
LD50	Rabbit	> 5000 mg/kg, (Estimated value)
Oral		
LD50	Rat	> 5000 mg/kg, (Estimated value)

Components	Species	Test Results
Morpholine (CAS 110-91-8)		
Acute		
Dermal		
LD50	Rabbit	504 mg/kg
Inhalation		
LC50	Rat	8 mg/l, 4 Hour
Oral		
LD50	Rat	1680 mg/kg

* Estimates for product may be based on additional component data not shown.

Skin corrosion/irritation	Causes severe skin burns and eye damage.
Serious eye damage/eye irritation	Causes serious eye damage.
Respiratory or skin sensitization	
Respiratory sensitization	This product is not expected to cause respiratory sensitization.
Skin sensitization	This product is not expected to cause skin sensitization.
Germ cell mutagenicity	No data available to indicate product or any components present at greater than 0.1% are mutagenic or genotoxic.
Carcinogenicity	Not classified.

ACGIH Carcinogens

Morpholine (CAS 110-91-8)	A4 Not classifiable as a human carcinogen.

Canada - Manitoba OELs: carcinogenicity

Morpholine (CAS 110-91-8)	Not classifiable as a human carcinogen.

IARC Monographs. Overall Evaluation of Carcinogenicity

Morpholine (CAS 110-91-8)	3 Not classifiable as to carcinogenicity to humans.

Reproductive toxicity	This product is not expected to cause reproductive or developmental effects.
Specific target organ toxicity - single exposure	Not classified.
Specific target organ toxicity - repeated exposure	Not classified.
Aspiration hazard	Based on available data, the classification criteria are not met.
Chronic effects	Prolonged inhalation may be harmful.

12. Ecological information

Ecotoxicity No ecotoxicity data noted for the ingredient(s).

Bioaccumulative potential

Partition coefficient n-octanol / water (log Kow)

Morpholine	-0.86

Mobility in soil No data available.

Other adverse effects Not available.

Persistence and degradability

13. Disposal considerations

Disposal instructions Collect and reclaim or dispose in sealed containers at licensed waste disposal site. Dispose of contents/container in accordance with local/regional/national/international regulations.

Local disposal regulations Dispose in accordance with all applicable regulations.

Waste from residues / unused products Dispose of in accordance with local regulations. Empty containers or liners may retain some product residues. This material and its container must be disposed of in a safe manner (see: Disposal instructions).

Contaminated packaging Since emptied containers may retain product residue, follow label warnings even after container is emptied. Empty containers should be taken to an approved waste handling site for recycling or disposal.

14. Transport information

TDG

Not regulated as dangerous goods.

The goods described above have been classified using a combination of testing, technical data, calculations and manufacturer knowledge in accordance with Part 2, Classification. TDG Classification is valid for road or rail transport only. For shipment by air or water, refer to IATA or IMDG regulations.

DOT

Not regulated as a dangerous good.

Some containers may be exempt from Dangerous Goods/Hazmat Transport Regulations, please check BOL for exact container classification.

IMDG

Not regulated as dangerous goods.

IATA

Not regulated as dangerous goods.

15. Regulatory information

Canadian regulations This product has been classified in accordance with the hazard criteria of the HPR and the SDS contains all the information required by the HPR.

Controlled Drugs and Substances Act

Not regulated.

Export Control List (CEPA 1999, Schedule 3)

Not listed.

Greenhouse Gases

Not listed.

Precursor Control Regulations

Not regulated.

Inventory status

Country(s) or region	Inventory name	On inventory (yes/no)*
Canada	Domestic Substances List (DSL)	No
Canada	Non-Domestic Substances List (NDSL)	No
United States & Puerto Rico	Toxic Substances Control Act (TSCA) Inventory	No

*A "Yes" indicates that all components of this product comply with the inventory requirements administered by the governing country(s)
A "No" indicates that one or more components of the product are not listed or exempt from listing on the inventory administered by the governing country(s).

16. Other information

Issue date Aug-11-2016

Revision date	Dec-17-2017
Version #	2.1
List of abbreviations	CAS: Chemical Abstract Service Registration Number TSRN indicates a Trade Secret Registry Number is used in place of the CAS number. ACGIH: American Conference of Governmental Industrial Hygienists NOEL: No Observed Effect Level STEL: Short Term Exposure Limit LC50: Lethal Concentration, 50% LD50: Lethal Dose, 50% TWA: Time Weighted Average BOD: Biochemical Oxygen Demand COD: Chemical Oxygen Demand TOC: Total Organic Carbon IATA: International Air Transport Association IMDG: International Maritime Dangerous Goods Code TLV: Threshold Limit Value
References:	No data available
Disclaimer	The information provided in this Safety Data Sheet is correct to the best of our knowledge, information and belief at the date of its publication. The information given is designed only as a guidance for safe handling, use, processing, storage, transportation, disposal and release and is not to be considered a warranty or quality specification. The information relates only to the specific material designated and may not be valid for such material used in combination with any other materials or in any process, unless specified in the text.

* Trademark of SUEZ. May be registered in one or more countries.

16

Mécanique Nordique
Plumbing
Heating
Ventillation
mecanique.nordique@hotmail.com
1255 Rue J.A.Bombardier Lévis QC G7A 2P4
Tél : (418) 496-1109 Fax : (418) 496-3803

REVIEWED BY CONTRACTOR
Kudlik Construction Ltd.
NAME: Sandra Rousseau P.Eng
DATE: Jun 18, 2018

IQUALUIT WWTP UPGRADES

DRAWING FOR APPROVAL

ENGINEER: **NUNAMI STANTEC LIMITED**

DRAWING #: AD-016

Section	: 22 10 10
Article	: 2.3 & 2.4
Plans	: M-802 PUMP SCHEDULE
Application	: SUMP PUMP SUBMERSIBLE
Brand	: HYDROMATIC
Model	: SPX50 & SK60
Revised #	:
Supplyer	: ATLANTIS POMPES ST-FOY
Date	: **16/06/2018**
By	: Martin Boucher

STANTEC PROJECT #: 110126045
SUBMITTAL # AD-016

This review by Stantec is for general conformance with the design concept of Stantec's design of the:
- ☐ Architectural
- ☐ Structural
- ☑ Mechanical
- ☐ Electrical
- ☐ Other

component(s) only and does not mean that Stantec has verified or approves the shop drawing(s). The Contractor remains solely responsible for the shop drawing(s) and this review by Stantec does not relieve the Contractor of the Contractor's responsibility for errors or omissions in the shop drawing(s) or for meeting all requirements of the contract documents. This review does not mean that Stantec approves the detailed design inherent in the shop drawing, responsibility for which shall remain with the Contractor submitting same, nor does this review mean that Stantec accepts any deviation of the shop drawing(s) from the contract documents. The Contractor is responsible for confirming all dimensions and correlating them at the job site, for all construction means, methods and techniques, and for coordination of construction work of all trades, including coordination of all shop drawings.

Stantec

- ☐ REVIEWED
- ☑ REVIEWED, AS NOTED
- ☐ REVISE AND RESUBMIT
- ☐ NOT REVIEWED

DATE 2018-06-26
BY Brendan Zrum, P.Eng

HYDROMATIC®
SPX50/SPX50H
EXPLOSION PROOF, SEWAGE EJECTOR

PERFORMANCE DATA

Wholesale Products **Page:** 6800-1
Dated: October 2007
SPX50 RPM: **1750** Discharge: **2"** Solids: **2"**
SPX50H RPM: **1750** Discharge: **1 ½"** Solids: **¾"**

TAG : P-2.1 & P-2.2
SUMP (DUPLEX)

THE TRUE COMPLETE NUMBER WITH THE VOLTAGE AND LENGHT OF CABLE IS : SPX50M7-20

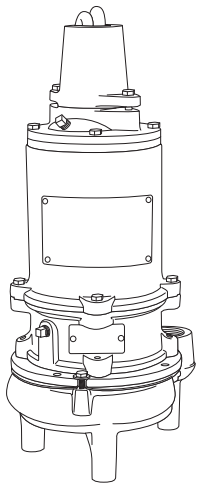

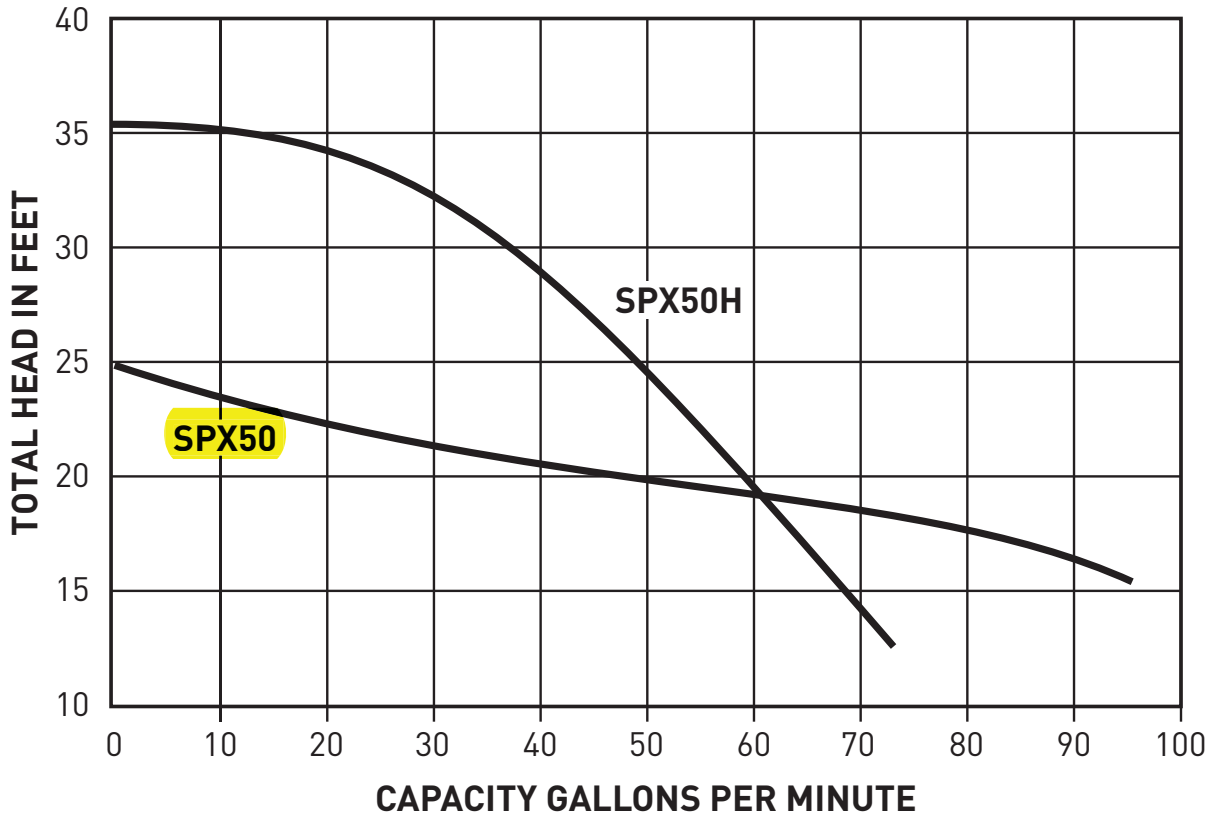

The curves reflect maximum performance characteristics without exceeding full load (Nameplate) horsepower. All pumps have a service factor of 1.2. Operation is recommended in the bounded area with operational point within the curve limit. Performance curves are based on actual tests with clear water at 70° F. and 1280 feet site elevation.

PENTAIR

Conditions of Service:

GPM:_____ **TDH**:_____

HYDROMATIC®

SPX50/SPX50H EXPLOSION PROOF, SEWAGE EJECTOR

Wholesale Products Page: 6800-2
Dated: October 2007

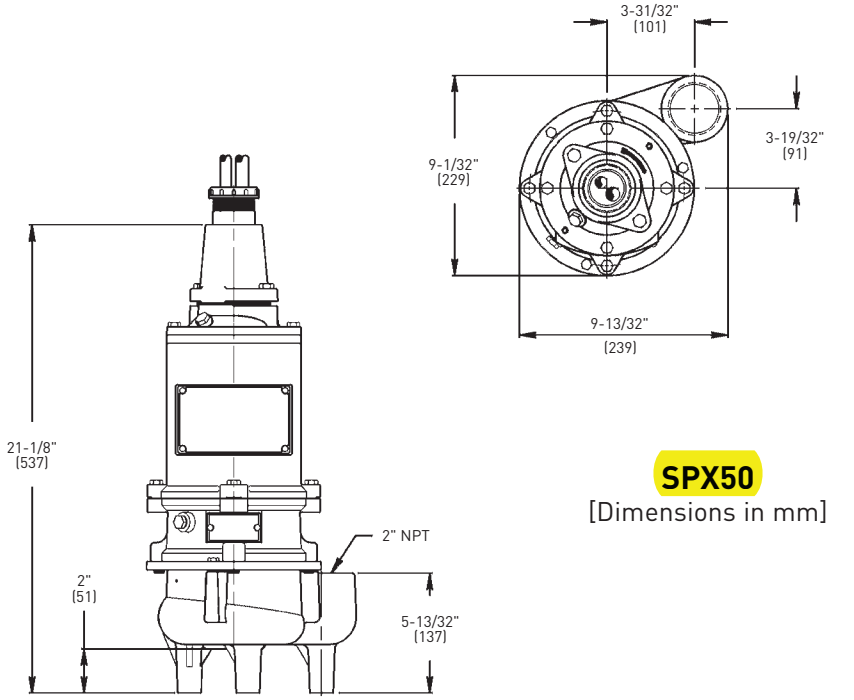

SPX50
[Dimensions in mm]

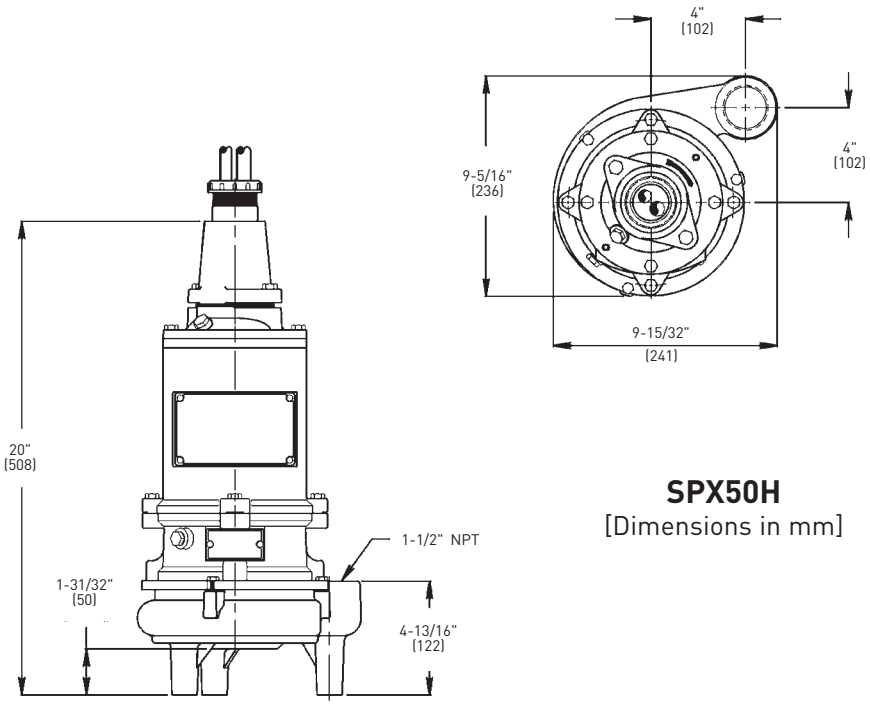

SPX50H
[Dimensions in mm]

All dimensions in inches. Metric for international use. Component dimensions may vary ± 1/8 inch. Dimensional data not for construction purpose unless certified. Dimensions and weights are approximate. On/Off level adjustable. We reserve the right to make revisions to our product (s) and the product (s) specifications without notice.

HYDROMATIC®
SPX50/SPX50H
EXPLOSION PROOF, SEWAGE EJECTOR

Wholesale Products **Page:** 6800-3
Dated: October 2007

MODEL: SPX50

R.P.M.	1750
MOTOR TYPE	OIL COOLED INDUCTION, CAPACITOR START
MOTOR DESIGN NEMA TYPE	TYPE N
GENERAL INSULATION CLASS	B
MAXIMUM STATOR TEMPERATURE	266°F (130°C)
MOTOR PROTECTION	WINDING HEAT SENSORS

HP	VOLTAGE	PHASE	NEC CODE	SERVICE FACTOR	FULL LOAD AMPS
1/2	200/230	1	-	1	5.9/5.3

MODEL: SPX50H

R.P.M.	1750
MOTOR TYPE	OIL COOLED INDUCTION, CAPACITOR START
MOTOR DESIGN NEMA TYPE	TYPE N
GENERAL INSULATION CLASS	B
MAXIMUM STATOR TEMPERATURE	266°F (130°C)
MOTOR PROTECTION	WINDING HEAT SENSORS

HP	VOLTAGE	PHASE	NEC CODE	SERVICE FACTOR	FULL LOAD AMPS
1/2	200/230	1	-	1	5.9/5.3

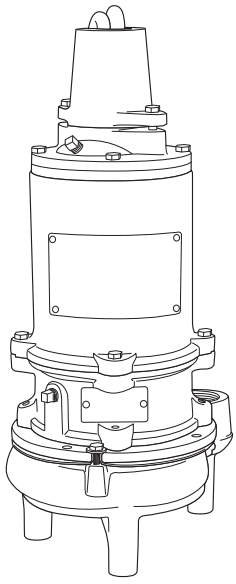

PENTAIR

HYDROMATIC®
SPX50/SPX50H
EXPLOSION PROOF, SEWAGE EJECTOR

Wholesale Products Page: 6800-4
Dated: October 2007

MODEL: SPX50/SPX50H

Physical Data

DISCHARGE SIZE	2" NPT (SPX50), 1 ½" NPT (SPX50H)
SOLIDS SIZE	2" (SPX50), ¾" (SPX50H)
IMPELLER TYPE	RECESSES
CABLE LENGTH	20' STANDARD
PAINT	

Temperature

MAXIMUM LIQUID	140°F
MAXIMUM STATOR	266°F (130°C)
OIL FLASH POINT	390°F

Technical Data

POWER CORD TYPE		SOW / SOW-A
MATERIALS OF CONSTRUCTION	MOTOR HOUSING	CAST IRON
	CASING	CAST IRON
	IMPELLER	CAST IRON
	MOTOR SHAFT	416 STAINLESS STEEL
	HARDWARE	416 STAINLESS STEEL
	"O" RINGS	-
MECHANICAL SEALS Standard:		CARBON / CERAMIC
UPPER BEARING		BALL RADIAL 6203
LOWER BEARING		BALL - THRUST 6306

HYDROMATIC®
SPX50/SPX50H
EXPLOSION PROOF, SEWAGE EJECTOR

Wholesale Products **Page:** 6800-5
Dated: October 2007

MODELS: SPX50/SPX50H

1.01 **GENERAL**

Contractor shall furnish all labor, materials, equipment and incidentals required to provide _____ (Qty.) submersible centrifugal sewage pump(s) as specified herein. The pump models covered in this specification are the SPX50/SPX50H. The pump furnished for this application shall be MODEL _____ as manufactured by Hydromatic Pumps.

2.01 **DESIGN CONDITIONS**

Each pump shall be rated _____ H.P., _____ volts, _____ phase, _____ hertz and operate at _____ RPM.

3.01 **OPERATING CONDITIONS**

The pump shall deliver _____ U.S. GPM/LPS at feet/meters TDH, and handle a _____ inch solid. The curve submitted for approval shall state, in addition to head and capacity performance, solid handling capability, amp rating, and design impeller diameter.

4.01 **CONSTRUCTION**

Each pump shall be of the sealed submersible type, incorporating features normally found in pumps furnished for the residential market.

These features include:

1. The seal housing for the SPX50/SPX50H is corrosion resistant cast iron.
2. The pump inlet shall be open and clear, without screening to provide access for sewage and solids.
3. All external mating parts shall be machined and Buna N, O-Ring sealed.
4. All fasteners exposed to the pumped liquid shall be 300 series stainless steel.
5. All power cords shall be water resistant UL or CSA approved, with double insulation, and sized as a function of Amp. draw.

5.01 **MOTOR AND SHAFT**

The stator, rotor and bearings shall be mounted in a sealed submersible type housing. Single phase motors shall be split phase or capacitor start with centrifugal switch. Three phase motors shall be Polyphase. Full Load and Locked Rotor Amps as well as Start and Run winding resistance shall be tabulated for each pump.

6.01 **BEARINGS, SHAFT AND MECHANICAL SEAL**

An upper radial and lower thrust bearing shall be required. These shall be heavy duty single row ball bearings which are permanently and continuously lubricated and cooled by the dielectric oil which fills the motor housing. The motor shaft shall be stainless steel and sealed from the pumped liquid with a carbon ceramic mechanical seal.

HYDROMATIC®
SPX50/SPX50H
EXPLOSION PROOF, SEWAGE EJECTOR

7.01 **IMPELLER**

The Impeller shall be high capacity, two vane, non clog design with pump out vanes on the back side. These vanes wash out grit and stringy material that will damage the shaft and mechanical seal.

8.01 **AUTOMATIC CONTROL**

All single phase pumps should be capable of automatic operation.

9.01 **MANUAL CONTROL**

The Single Phase pumps are not supplied with any type of automatic control. A super or double wide angle piggy-back float switch can be supplied and fitted to these pumps.

10.01 **PAINTING**

All cast iron parts shall be painted before assembly with a water reducible alkyd air dried enamel. The paint shall be applied in one coat with a minimum thickness of 3 to 4 mils.

TWO COATS OF ENAMEL AS PER 22 10 10 2.3.4

12.01 **TESTING**

All pumps shall be individually tested to include the following:

1. The pump and power cord shall be visually inspected for imperfections, cuts or nicks.
2. The pump shall have a ground continuity check and the motor chamber shall be Hi-potted to test for moisture content and/or insulation defects.
3. The motor and volute housing shall be pressurized and a 10 second air leak decay test run.
4. Oil is added, and the pump is run. Voltage and current are monitored visually, electronically, and the tester listens for any noise or malfunction.

PENTAIR

USA
293 WRIGHT STREET, DELAVAN, WI 53115 WWW.HYDROMATIC.COM
PH: 888-957-8677 ORDERS FAX: 800-426-9446

CANADA
269 TRILLIUM DRIVE, KITCHENER, ONTARIO, CANADA N2G 4W5
PH: 519-896-2163 ORDERS FAX: 519-896-6337

Because we are continuously improving our products and services, Pentair reserves the right to change specifications without prior notice.

© 2013 Pentair Ltd. All Rights Reserved.

TAG : P-2.1 & P-2.2

HYDROMATIC® SPX50/SPX50H SUBMERSIBLE EXPLOSION-PROOF PUMPS

HYDROMATIC SPX50 and SPX50H are specifically designed to pump contaminated effluent and water. The SPX50/SPX50H is UL and CSA approved (Class 1, Division 1, Group D) to handle a wide variety of pollutants, including gas and oil.



Features

- HYDROMATIC SPX50/SPX50H is recommended to be sold/used with HYDROMATIC'S UL 913 listed control panel.
- Oil-filled motor for maximum heat dissipation and constant bearing lubrication.
- Recessed impeller reduces radial bearing loads, increases bearing life.
- High torque capacitor start, single phase motor for assured starting under heavy load.
- Seal leak probes warn of seal leak condition.
- On winding heat sensors will stop motor in case of over-heating to prevent costly motor damage.

PENTAIR

WWW.HYDROMATIC.COM

HYDROMATIC® SPX50/SPX50H

Pump Characteristics

Pump/Motor Unit	Submersible Explosion-Proof Sump	
Phase	1 Ø	
Voltage	200	230
Horsepower	1/2 HP	
Run Amps	SPX50 6.5	SPX50H 5.3
Solid Size	2" (SPX50)	3/4" (SPX50H)
Motor Type	Oil Cooled Induction	
	Capacitor Start	
R.P.M.	1750	
Temp. Stator	Max. Design 266° F (130° C)	
Operation	Intermittent	
Coolant Oil	Oil Flash Pt. 390° F	
Hertz	60 Hz	
Heat Sensor	Bi-Metallic	
Temperature	Max. Water 140° F	
NEMA Design	Type N	Type N
Insulation	Class B	
Discharge Size	SPX50 2" NPT	SPX50H 1-1/2" NPT
Unit Weight	SPX50 80 lbs.	SPX50H770 lbs.
Power Cord	Type SOW/SOW-A | Water Resistant 15' 14/4 600 V, 60° C | CSA/UL approved	

Materials of Construction

Part Name	Material
Motor Housing	Cast Iron ASTM-48, 76
Pump Casing	Cast Iron ASTM-48, 76
Coolant/Lubricant	Dielectric Oil
Shaft	416 Stainless Steel
Mechanical Shaft Seal	Dual: Carbon/Ceramic Type 21 BF1C1
Impeller	Recessed, Cast Iron Class 20 A-48-62
Upper Bearing	Ball Radial 6203
Lower Bearing	Ball Thrust 6306
Fasteners	316 Stainless Steel

Performance Data

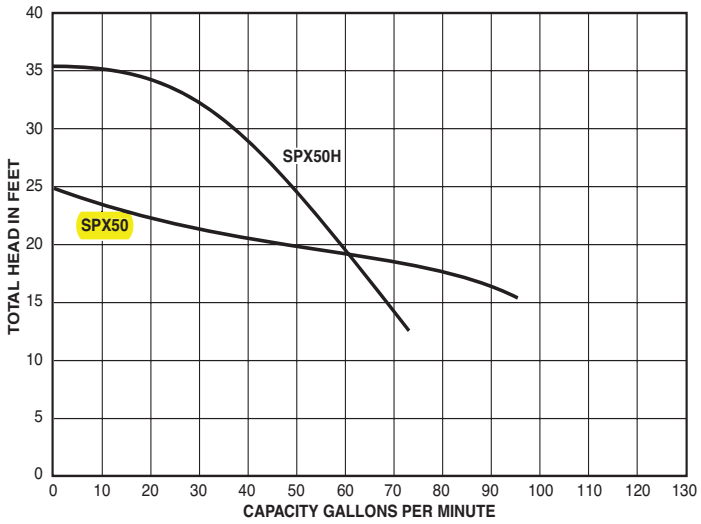

Dimensional Data

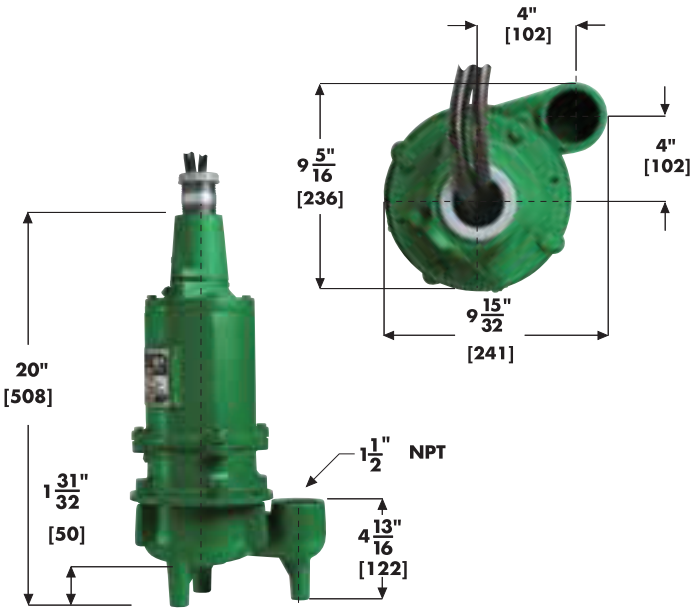

All dimensions in inches. Component dimensions may vary ± 1/8 inch. Dimensional data not for construction purpose unless certified. Dimensions and weights are approximate. On/Off level adjustable. We reserve the right to make revisions to our product and their specifications without notice.

PENTAIR

USA
293 WRIGHT STREET, DELAVAN, WI 53115 WWW.HYDROMATIC.COM
PH: 888-957-8677 ORDERS FAX: 800-426-9446

CANADA
269 TRILLIUM DRIVE, KITCHENER, ONTARIO, CANADA N2G 4W5
PH: 519-896-2163 ORDERS FAX: 519-896-6337

Because we are continuously improving our products and services, Pentair reserves the right to change specifications without prior notice.

© 2012 Pentair Ltd. All Rights Reserved.

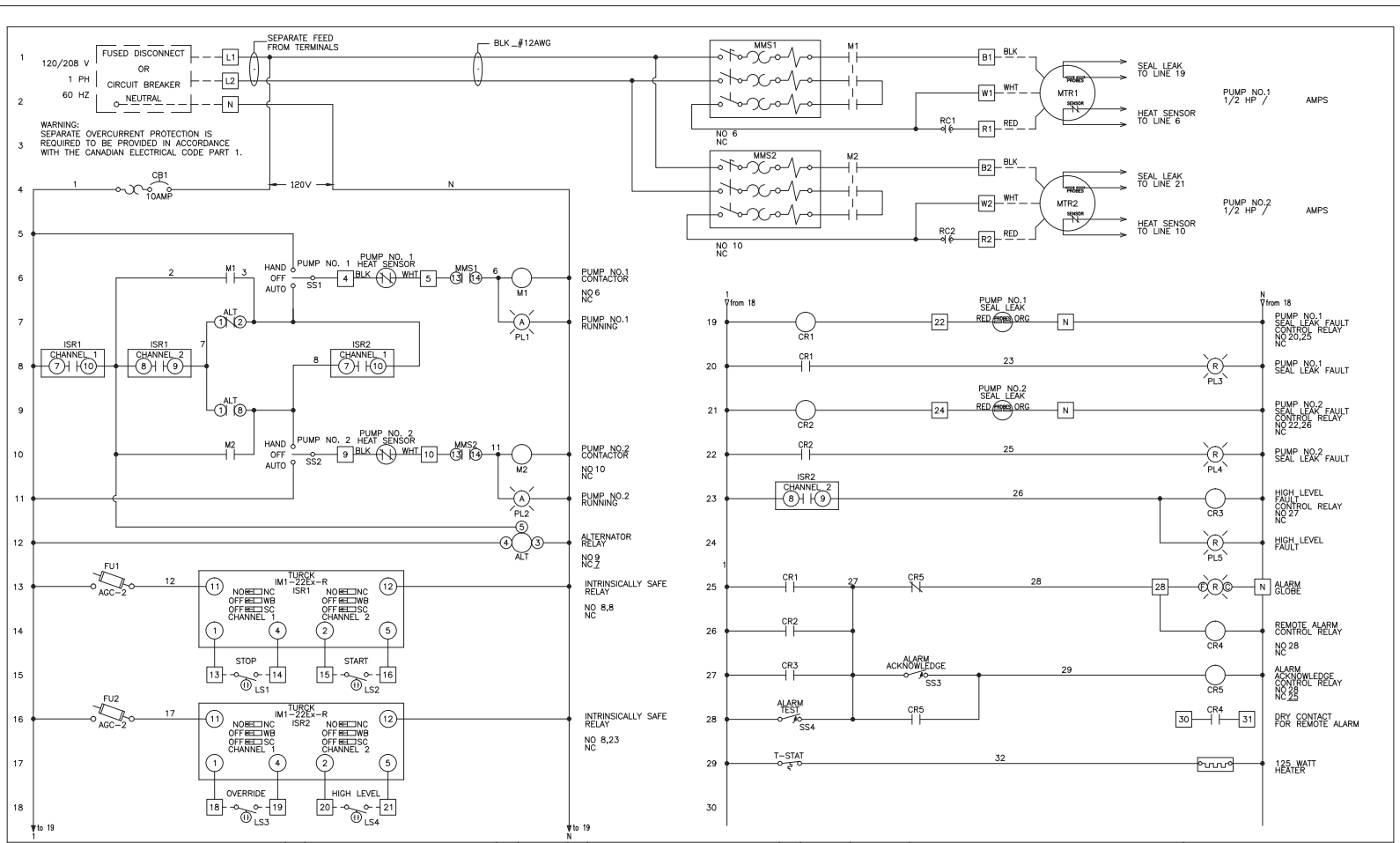

Pentair Canada Inc
490 Pinebush Road, Unit #4
CAMBRIDGE, ONTARIO N1T 0A5
CANADA

CONTROL PANEL
FOR DUPLEX SPX 50 PUMPS
P-2.1 & P2.2

REV	DESCRIPTION	BY	DATE	REV	DESCRIPTION	BY	DATE

REV'D	REF
DESIGNED	I. MURRAY
DRAWN	I. MURRAY
DATE	JUNE 12, 2018
SCALE	N.T.S.
CAD REF.	PEN07398B-1
SHT NO.	1 OF 2

TITLE: DUPLEX PUMP CONTROL SYSTEM MODEL NO. CPSX5-01DW

DWG NO. PS2180- REV 0

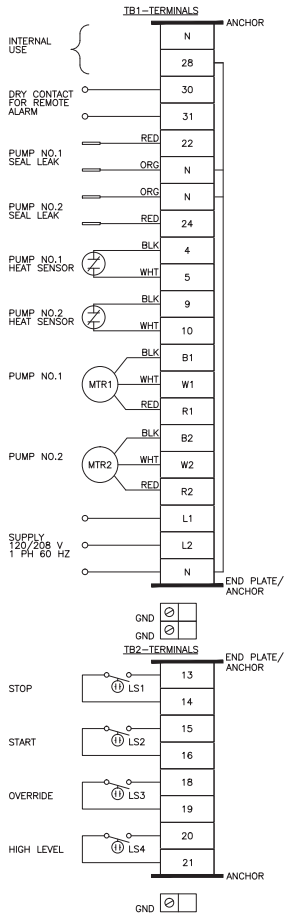

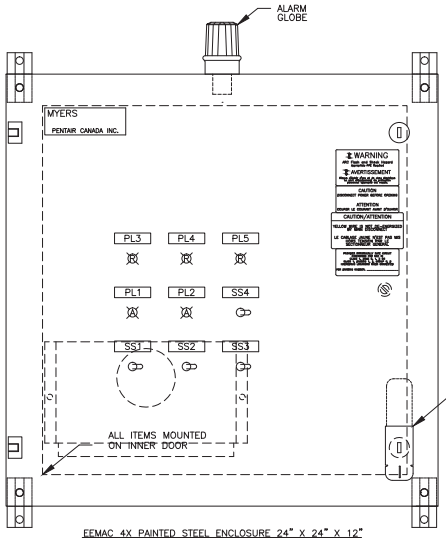

EEMAC 4X PAINTED STEEL ENCLOSURE 24" X 24" X 12"

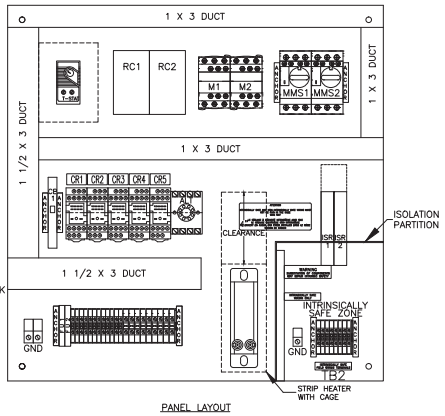

PANEL LAYOUT

NOTES:
PANEL WIRING STANDARDS ARE AS FOLLOW:

DESCRIPTION	COLOUR	WIRE GAUGE
120VAC CONTROL	RED	#16AWG
NEUTRAL WIRE	WHITE	#16AWG
INTRINSICALLY SAFE WIRE	LIGHT BLUE	#16AWG
DC + WIRE	BLUE	#16AWG
DC – WIRE	BLUE/WHITE STRIPES	#16AWG
24VAC WIRE	BROWN	#16AWG
GROUND WIRE	GREEN	#14AWG
DRY CONTACT WIRE	YELLOW	#16AWG
PLC & ZELIO WIRE	AS REQUIRED	#18AWG
ANALOG + WIRE	BLACK	#18AWG
ANALOG – WIRE	WHITE	#18AWG
POWER WIRE	BLACK	AS NOTED

NOTES: A) INTRINSICALLY SAFE WIRING MUST BE RUN IN SEPARATE CONDUIT TO TERMINALS IN CONTROL PANEL.

B) IF FLOATS ARE NOT WIRED DIRECTLY TO TERMINALS IN CONTROL PANEL, CAUTION MUST BE TAKEN TO PREVENT CONDENSATION FROM FORMING ACROSS FLOAT CONTACT CIRCUIT. THIS MAY CAUSE FALSE OPERATION OF INTRINSICALLY SAFE RELAY.

C) ONLY INTRINSICALLY SAFE WIRING IS ALLOWED IN THE SEGREGATED AREA

D) LENGTH OF CABLE TO BE CONNECTED TO THE BARRIER SHALL BE SPECIFIED BY BARRIER MANUFACTURER OR LEAST OF, LENGTH(ft)=C_a/60 pF AND LENGTH(ft)=L_a/0.2 µH WHERE, (C_a=CAPACITANCE; L_a=INDUCTANCE) PROVIDED BY MANUFACTURER OF BARRIER.

Pentair Canada Inc
490 Pinebush Road, Unit #4
CAMBRIDGE, ONTARIO N1T 0A5
CANADA

CONTROL PANEL
FOR DUPLEX SPX50 PUMPS
P-2.1 & P2.2

REV	DESCRIPTION	BY	DATE	REV	DESCRIPTION	BY	DATE

REV'D | REF
DESIGNED I. MURRAY | SCALE 3/16" = 1"
DRAWN I. MURRAY | CAD REF. PEN07398B-2
DATE JUNE 12, 2018 | SHT NO. 2 OF 2

TITLE: DUPLEX PUMP CONTROL SYSTEM MODEL NO. CPSX5-01DW
DWG NO. PS2180- | REV 0

CSB4-SS

FLOAT BRACKET FOR MOUNTING UP
TO (4) FOUR CONTROLS

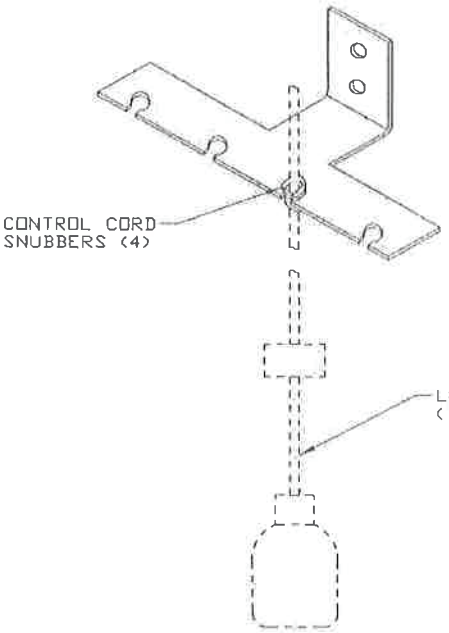

bracket is 11' wide
and 4" deep 3" high

CSB5-SS

FLOAT BRACKET FOR MOUNTING UP
TO (5) FIVE CONTROLS

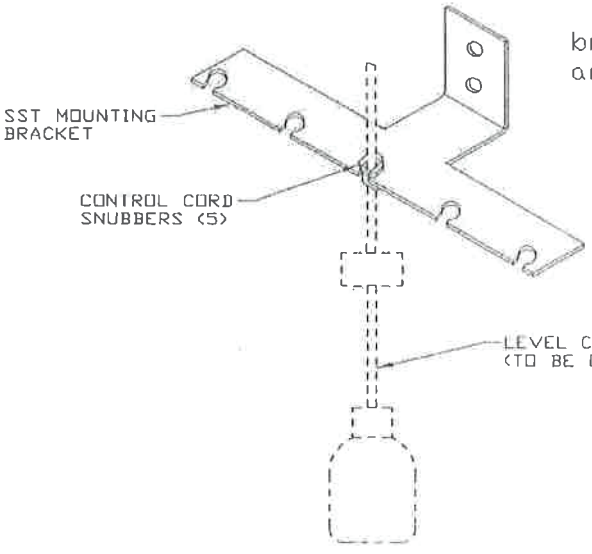

bracket is 14' wide
and 4" deep 3" high

ES-2365A

SJE SIGNALMASTER® Control Switch

Mechanically-activated, narrow-angle float switch designed to activate pump control panels and alarms.



This narrow-angle sensing device is used to accurately monitor liquid levels in:

- water
- sewage applications

The SJE SignalMaster® control switch is not sensitive to rotation.

Normally Open Model (high level)
The control switch turns on (closes) when the switch tips slightly **above** horizontal signaling a high level, and turns off (opens) when the switch drops slightly below horizontal.

Normally Closed Model (low level)
The control switch turns on (closes) when the switch tips slightly **below** horizontal signaling a low level, and turns off (opens) when the switch tips slightly above horizontal.

FEATURES

- Mechanically-activated, snap action contacts.
- High impact, corrosion resistant, polypropylene float housing.
- Not sensitive to rotation.
- Control differential of 1.5 inches (4 cm) above or below horizontal.
- Yellow colored cap for easy identification of normally open control switch.
- White colored cap for easy identification of normally closed control switch.
- UL Listed for use in water and sewage.
- CSA Certified.
- Five-year limited warranty.

SSPMA MEMBER

LR54245

LISTED 83N2

Member of: Hydraulic Institute

SPECIFICATIONS

CABLE: flexible 18 gauge, 2 conductor (UL, CSA) SJOW, water-resistant (CPE)

FLOAT: 2.74 inch diameter x 4.83 inch long (7.0 x 12.3 cm) high impact, corrosion resistant, polypropylene housing for use in sewage and water up to 140°F (60°C)

MAXIMUM WATER DEPTH: 30 feet (9 meters), 13 PSI (90 kPa)

ELECTRICAL: 5 amp, 125/250 VAC, 50/60 Hz

NOTE: This switch is not recommended for controlling:

- electric loads less than 100 milliamps, 12 VAC
- non-arcing electric loads

OPTIONS

This switch is available:

- CE certified unit available upon request.
- for normally open (high level) applications or normally closed (low level) applications.
- in standard cable lengths of 10, 15, 20, or 30 feet and 3, 5, 6, or 10 meters (longer lengths available)
- with two mounting options that allow for flexibility in installation:

  Mounting Clamp: for applications where the switch can be attached to a discharge pipe or similar mounting device.

  Externally Weighted: for applications where the switch can be suspended from above.

SEE BACKSIDE FOR ORDERING INFORMATION.
SEE PRICE BOOK FOR LIST PRICE.

SJE Rhombus®
PO Box 1708, Detroit Lakes, MN 56502
1-888-DIAL-SJE • 1-218-847-1317
1-218-847-4617 Fax
email: customer.service@sjerhombus.com
www.sjerhombus.com

SJE SIGNALMASTER® Control Switch

Mechanically-activated, narrow-angle float switch designed to activate pump control panels and alarms.

ORDERING INFORMATION

Normally Open		Normally Closed		Shipping Weight
Part #	**Description**	**Part #**	**Description**	
1006042	10SGMPCNO	**1006046**	10SGMPCNC	1.04 lbs.
1006050	10SGMWENO	**1006054**	10SGMWENC	2.13 lbs.
1006043	15SGMPCNO	**1006047**	15SGMPCNC	1.37 lbs.
1006051	15SGMWENO	**1006055**	15SGMWENC	2.45 lbs.
1006044	20SGMPCNO	**1006048**	20SGMPCNC	1.69 lbs.
1006052	20SGMWENO	**1006056**	20SGMWENC	2.70 lbs.
1006045	30SGMPCNO	**1006049**	30SGMPCNC	2.34 lbs.
1006053	30SGMWENO	**1006057**	30SGMWENC	3.43 lbs.

PC = **P**ipe **C**lamp **WE** = **W**eighted **E**xternally **NO** = **N**ormally **O**pen **NC** = **N**ormally **C**losed
NOTE: Descriptions are grouped by cable length measured in feet (10, 15, 20, 30).
SEE PRICE BOOK FOR LIST PRICE.

OPTIONS

MOUNTING CLAMP
is standard - deduct optional

PACKAGING
Bagged - standard.
Boxed - optional
Bulk - optional

ADDITIONAL CABLE
Longer cable lengths available. Please call for details.

UL Listed for Water & Sewage

LISTED 83N2 LR54245

SSPMA MEMBER

SPECIFICATIONS

CABLE: flexible 18 gauge, 2 conductor (UL) SJOW, water-resistant (CPE)

FLOAT: 2.74 inch diameter x 4.83 inch long (7 x 12.3 cm), high impact, corrosion resistant polypropylene for use in sewage and water up to 140°F (60°C)

MAXIMUM WATER DEPTH: 30 feet (9 meters), 13 psi

ELECTRICAL: 5 amp, 125/250 VAC, 50/60 Hz

This switch is not recommended for controlling:

- electric loads less than 100 milliamps, 12 VAC
- non-arcing electric loads

OTHER INFORMATION

NORMALLY OPEN (high level) OPERATION
The control switch closes (turns on) when the float tips slightly **above** horizontal signaling a high level, and opens (turns off) when the float drops slightly **below** horizontal in water or sewage applications.

NORMALLY CLOSED (low level) OPERATION
The control switch closes (turns on) when the float tips slightly **below** horizontal signaling a low level, and opens (turns off) when the float tips slightly **above** horizontal in water or sewage applications.

Call or fax your order!
1-888-DIAL-SJE (1-888-342-5753) Fax 218-847-4617

SJE Rhombus®
www.sjerhombus.com
customer.service@sjerhombus.com

9500115A

© SJE-Rhombus 07/16

FLOAT ACCESSORIES

Cable Clamp Assembly, Float Brackets, Pipe Mounting Bracket, Cable Weights, ETM w/ Piggy-Back Plug, Vertical Reed Switch, Anchor and Chain

CABLE WEIGHT

Provides an accurate pivot point for suspended float switches.



U.S. Patent 5,306,885

- Gripper teeth on clip and weight channel securely lock float cable into place
- Cable Weight can be adjusted without the use of tools

HOUSING: 1 pound, 12 ounce (0.8 kgs.), 2.8 inch diameter x 3.3 inch long (7.1 cm diameter x 8.4 cm), impact resistant, non-corrosive, PVC housing for use in liquids up to 140°F (60°C).

CLIP: injection molded acetal plastic
WIRE/CABLE ACCOMMODATED: SJOW, SJTW, 18/2, 18/3, 16/2, 16/3, 14/2 and 14/3
SHIP WEIGHT: 2 lbs. (.907 kgs)

Part Number	Description
1002230	Cable Weight

CABLE WEIGHT MINI

Provides an accurate pivot point for suspended float switches.



- One piece cable weight
- Turn and Lock for easy installation.

HOUSING: 9.6 ounces (0.27 kgs.), 2.5 inch diameter x 2.5 inch long (6.35 cm diameter x 6.35 cm), impact resistant, non-corrosive, PVC housing for use in liquids up to 140°F (60°C)
WIRE/CABLE ACCOMMODATED: SJOW, SJTW, 18/2, 18/3

Part Number	Description
1030356	Cable Weight Mini

ELAPSED TIME METER WITH PIGGY-BACK PLUG

Plugs into switched outlet or piggy-back switch of plugger control panel. Unit must be placed inside an enclosure.



- Screws and mounting adhesive included.

Part Number	Description
1022846	ETM w/120V piggy-back plug
1032834	ETM w/230V piggy-back plug

VERTICAL REED SWITCH



- Control differential: .375 inch (1 cm)
- Maximum angle from vertical: 5°
- Electrical: 250 mAmps, 12-125 VAC, 50/60 Hz
  500 mAmps, 6-12 VDC, 50/60 Hz
- Housing and Float: 1.60 inch diameter x 6.7 inch long (4.06 cm X 17.01 cm), high impact, corrosion resistant PVC for use in sewage and non-potable water up to 120°F (50°C)

Part Number	Description
1011027	10ft VRS 120V Bulk
1016561	15ft VRS 120V Bulk

ANCHOR



- 10 lb. weight
- Yellow, vinyl coated, mushroom style

Part Number	Description
1018687	10 lb. Mushroom Anchor

CHAIN



- 1/8" thickness
- 316 grade stainless steel
- Available in one foot increments

Part Number	Description
1018823	1/8 inch Chain

PRODUCTS CONTINUED ON NEXT PAGE.
SEE PRICE BOOK FOR LIST PRICES.

SJE Rhombus®
PO Box 1708, Detroit Lakes, MN 56502
1-888-DIAL-SJE • 1-218-847-1317
1-218-847-4617 Fax
email: sje@sjerhombus.com
www.sjerhombus.com

Ball Check Valve

Model 208T

Sizes 1" Thru 2"/ 25mm thru 50mm

FLOMATIC®
Flomatic Corporation

Materials

NOTE: PLASTIC VALVES SHOULD NOT BE BURIED UNDERGROUND

LOW-LEAD IAPMO R&T NSF/ANSI 372 #1 Pb Lead-Free

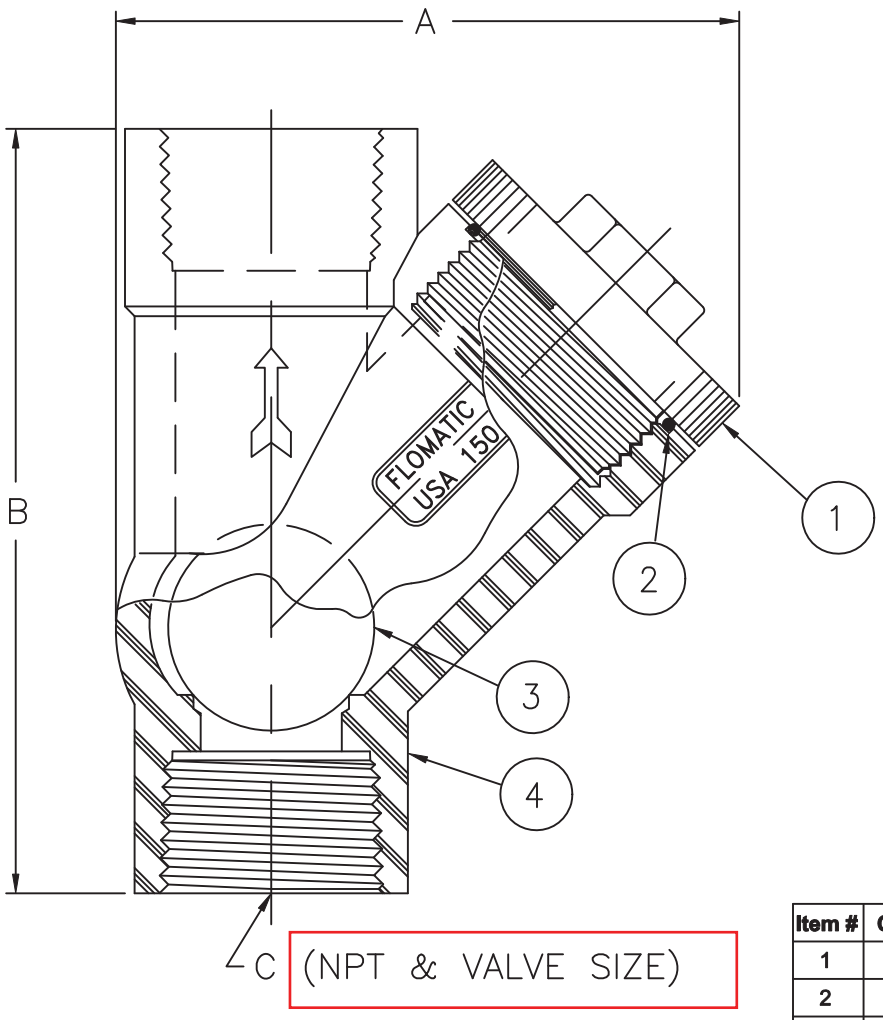

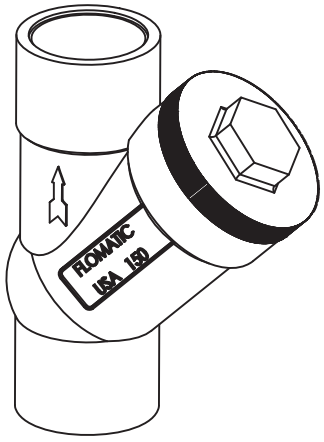

Item #	Qty	Description	Material
1	1	Cap	PVC
2	1	O'Ring	Buna-n
3	1	Ball (Sinking)	Buna-n
4	1	Body	PVC
5	2	Bushing (not shown)*	PVC

*Uses bushing not shown
Max Temp 150°F (65°C)
Max Inlet Pressure 100 psi (7 bar)

Dimensions

Size		Part #	A		B		Weight	
inch	mm		inch	mm	inch	mm	lbs	kg
1*	25	2131-T*	4-1/2	114	6-27/32	174	1	.45
1-1/4	32	2132-T	4-1/2	114	5-21/32	144	1	.45
1-1/2*	40	2133-T*	6-11/32	161	8-13/64	208	2	.91
2	50	2134-T	6-11/32	161	7-1/16	179	2	.91

Flomatic Corporation can accept no responsibility for possible errors in catalogues, brochures and other printed material. Flomatic Corporation reserves the right to alter its products without notices. This also applies to product already agreed. All trademarks in this material are property of the respective companies. All right reserved. ©2016 Flomatic Corporation. The drawings & information on this drawing sheet are the sole & exclusive property of Flomatic Corporation. Any reproduction, distribution, display or use of these drawings or information in whole or in part without written authorization of Flomatic Corporation is strictly prohibited.

FLOMATIC® VALVES

November 1, 1991
Dwg No:S2131-34 Rev: L (11/16)

FLOMATIC CORPORATION
GLENS FALLS, N.Y. 12801
PHONE (518) 761-9797
FAX (518) 761-9798

COMPACT PVC / CPVC BALL VALVES

PVC Ball Valves

0929 Series 1/2" - 4" Threaded (FPT)
0929S Series 1/2" - 4" Slip

- 150 PSI Working Pressure @ 73°F (22°C)
- Temperature Rating: 32°F to 122°F (0°C to 50°C)
- EPDM Seats/EPDM O-ring Seal
- White PVC Molded Body with Black PVC Handle

PVC Ball Valves

0921 Series 1/2" - 4" Threaded (FPT)
0921S Series 1/2" - 4" Slip

- EPDM Seats/EPDM O-Ring Seal
- White PVC Body with Black PVC Handle
- NSNSF/ANSI Standard 61 & 372 Certified

0923 Series 1/2" - 2" Threaded (FPT)
0923S Series 1/2" - 2" Slip

- 150 PSI Working Pressure @ 73°F (22°C)
- Temperature Rating: 41°F to 122°F (5°C to 50°C)
- PTFE Seats/Viton O-ring Seal
- White PVC Body with Red PVC Handle

Refer to Temperature Correction Factors

NO LEAD LEAD-FREE — Third Party Certified to NSF / ANSI 372



CPVC Hot Water System Ball Valves

0922CTS Series 1/2" - 2" Threaded (CTS x CTS)

- 150 PSI Working Pressure
- Temperature Rating: Continuous 194°F (90°C)
  Short Hours 212°F (100°C)
- PTFE Seats/EPDM O-ring Seal
- Beige CPVC Molded Body with Red Handle
- NSF/ANSI Standard 61 & 372 Certified

UNION PVC BALL VALVES

PVC Blocked True Union Ball Valves

0924 Series 1/2" - 2" Threaded (FPT)

- Double Union/Double block design permits in-line maintenance without disconnecting pipe
- Bayonet style locks prevent ball from being blown out
- Handle equipped with removable spanner devise
- Full unobstructed flow without any turbulence or pressure drop
- Working Temperature Range: 41°F to 122°F (5°C to 50°C)
- 150 PSI Working Pressure at 73°F (22°C)
- EPDM O-rings
- Suitable for both schedule 40 & 80 PVC pipe

Shipped complete with both thread and slip interchangeable connections



NO LEAD LEAD-FREE — Third Party Certified to NSF / ANSI 372

PVC Blocked True Union Ball Valves

0925NL Series 1/2" - 4" EPDM "O" RING SEAL ← 2"
0926 Series 1/2" - 4" VITON "O" RING SEAL

- 2-Way Blocking True Union Ball Valve - 150 PSI Working Pressure @ 73°F (22°C)
- Unique Double Union/Double Block design permits in-line maintenance without disconnecting pipe
- Both ends blocked with bayonet-style locks which prevent ball from being blown out
- Handle equipped with removable spanner device
- Full, unobstructed flow without any turbulence or pressure drop
- Available with either EPDM or Viton "O"-ring seals
- Self Lubricating PTFE (polytetrafluoroethylene) Seats are corrosion and chemical resistant
- Quick and easy disassembly without use of special tools, hand tighten only
- Suitable for both schedule 40 & 80 PVC pipe

PVC Single Union Ball Valves

0933 Series 1-1/2" - 2" Threaded (FPT)
0933S Series 1-1/2" - 4" Slip

- Threaded or socket
- Working Pressure 150 PSI @ 73°F
- Lightweight and compact design suitable for plumbing, pool and spa field
- PTFE (polytetrafluoroethylene) seat is corrosion and chemical resistantto most chemicals
- Non blocking design
- Suitable for both schedule 40 & 80 PVC pipe

HYDROMATIC®
SK60
SUBMERSIBLE SEWAGE EJECTOR

PERFORMANCE DATA

Wholesale Products **Page:** 6290-1
Dated: January 2001
RPM: **1750** Discharge: **2"** Solids: **2"**

TAG : P-2.3 & P-2.4 , P-2.5 & P-2.6

THE TRUE COMPLETE NUMBER WITH THE
VOLTAGE AND LENGHT OF CABLE IS : SK60M6-20

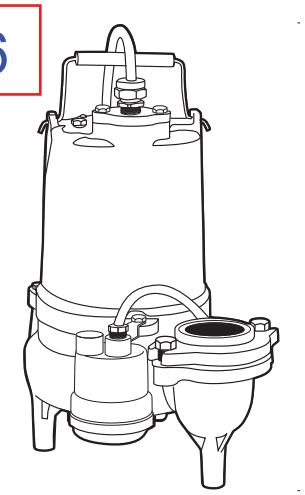

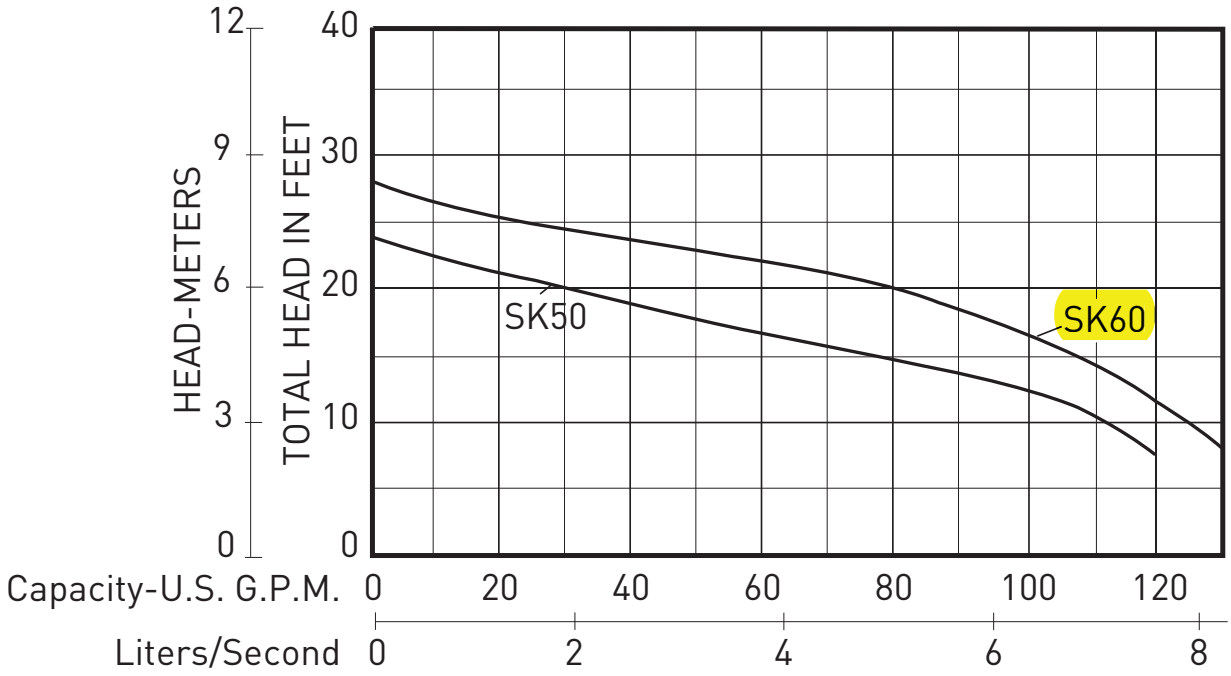

The curves reflect maximum performance characteristics without exceeding full load (Nameplate) horsepower. All pumps have a service factor of 1.2. Operation is recommended in the bounded area with operational point within the curve limit. Performance curves are based on actual tests with clear water at 70° F. and 1280 feet site elevation.

PENTAIR

Conditions of Service:

GPM:_____ **TDH**:_____

HYDROMATIC®
SK60
SUBMERSIBLE SEWAGE EJECTOR

Wholesale Products **Page:** 6290-2
Dated: January 2001

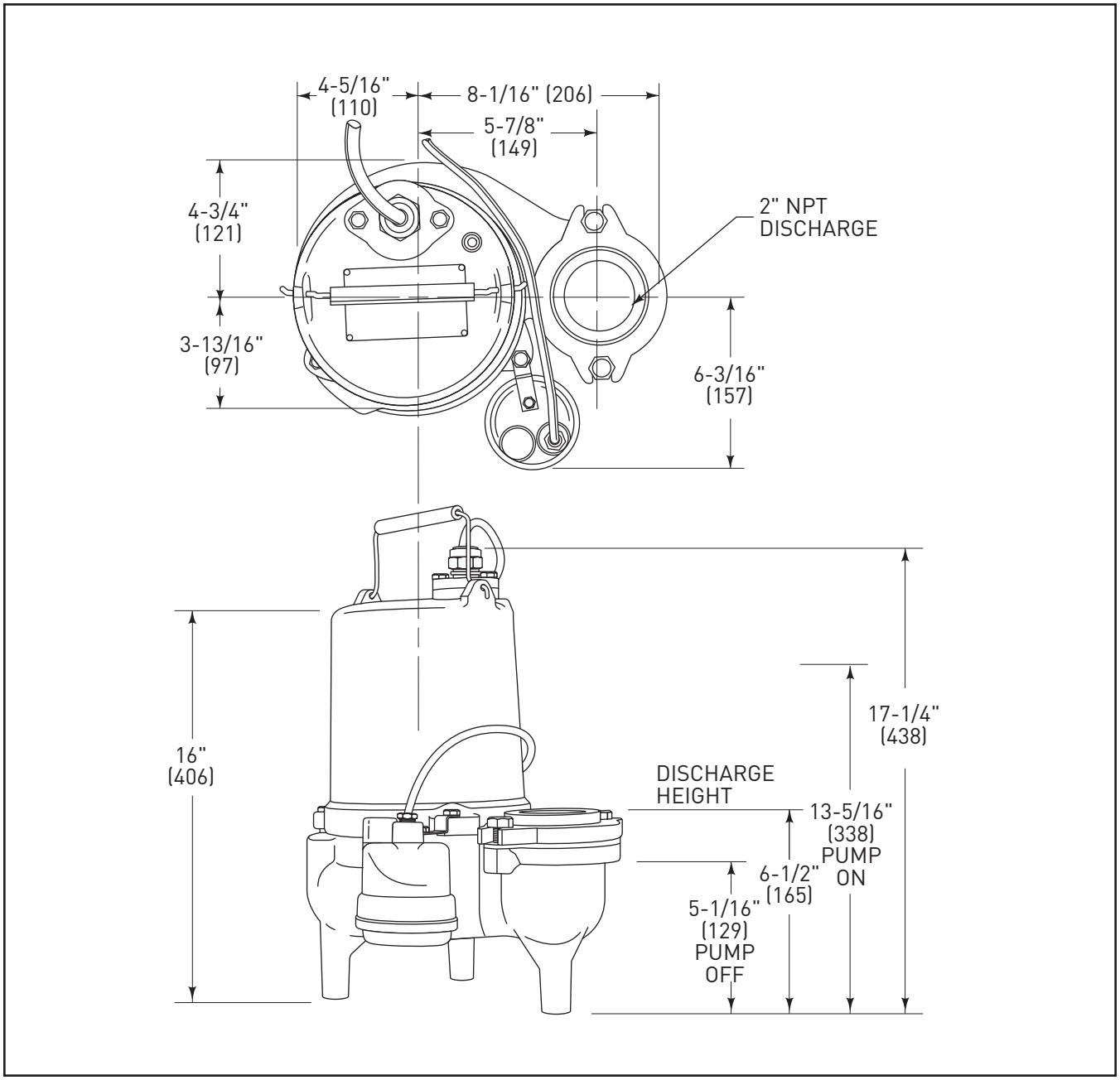

All dimensions in inches. Metric for international use. Component dimensions may vary ± 1/8 inch. Dimensional data not for construction purpose unless certified. Dimensions and weights are approximate. On/Off level adjustable. We reserve the right to make revisions to our product (s) and the product (s) specifications without notice.

HYDROMATIC®

SK60

SUBMERSIBLE SEWAGE EJECTOR

Wholesale Products **Page:** 6290-3
Dated: January 2001

MODEL: SK50

R.P.M.	1750
MOTOR TYPE	OIL FILLED WITH AUTOMATIC RESET THERMAL OVERLOAD
MOTOR PROTECTION	AUTOMATIC RESET / THERMAL OVERLOAD

HP	VOLTAGE	PHASE	NEC CODE	SERVICE FACTOR	FULL LOAD AMPS
6/10	115	1	-	1	12
	200				6.9
	230				6.0
	200	3			2.9
	230				2.5
	460				1.3
	575				1.04

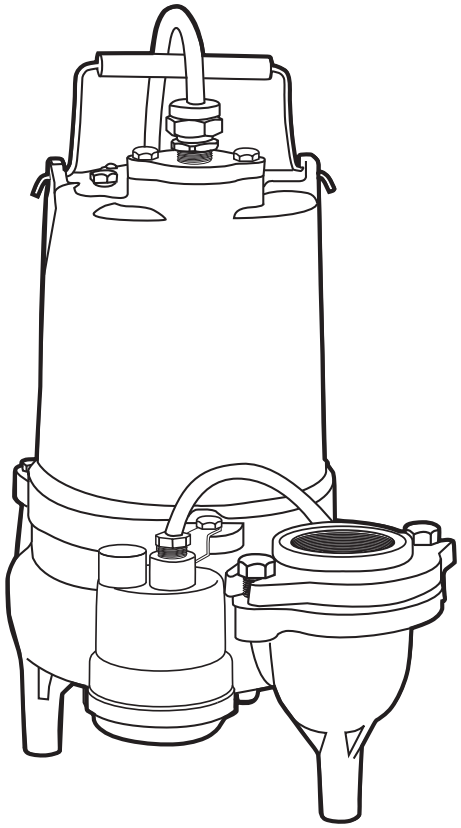

PENTAIR

HYDROMATIC®
SK60
SUBMERSIBLE SEWAGE EJECTOR

Wholesale Products Page: 6290-4
Dated: January 2001

MODEL: SK50

Physical Data

DISCHARGE SIZE	2" NPT (STANDARD), 3" NPT (OPTIONAL)
SOLIDS SIZE	2"
IMPELLER TYPE	NON CLOG
CABLE LENGTH	10' STANDARD 20' OPTIONAL
PAINT	PAINTED AFTER ASSEMBLY, DARK GREEN, WATER REDUCIBLE ENAMEL, ONE COAT, AIR DRIED.

Temperature

MAXIMUM LIQUID	140°F
MAXIMUM STATOR	-
OIL FLASH POINT	-

Technical Data

POWER CORD TYPE		STW-A
MATERIALS OF CONSTRUCTION	MOTOR HOUSING	CAST IRON
	CASING	CAST IRON
	IMPELLER	CAST IRON
	MOTOR SHAFT	416 STAINLESS STEEL
	HARDWARE	STAINLESS STEEL
	"O" RINGS	BUNA-N
MECHANICAL SEALS Standard:		CARBON / CERAMIC
UPPER BEARING		SINGLE ROW-BALL
LOWER BEARING		SINGLE ROW-BALL

HYDROMATIC®
SK60
SUBMERSIBLE SEWAGE EJECTOR

Wholesale Products Page: 6290-5
Dated: January 2001

MODEL: SK50

1.01 **GENERAL**

Contractor shall furnish all labor, materials, equipment and incidentals required to provide _____ (Qty.) submersible centrifugal sewage ejector pump(s) as specified herein. The pump model covered in this specification is the SK60. The pump furnished for this application shall be MODEL _____ as manufactured by Hydromatic Pumps.

2.01 **DESIGN CONDITIONS**

Each pump shall be rated _____ H.P., _____ volts, _____ phase, _____ hertz and operate at _____ RPM.

3.01 **OPERATING CONDITIONS**

The pump shall deliver _____ U.S. GPM/LPS at feet/meters TDH, and handle a _____ inch solid. The curve submitted for approval shall state, in addition to head and capacity performance, solid handling capability, amp rating, and design impeller diameter.

4.01 **CONSTRUCTION**

Each pump shall be of the sealed submersible type, incorporating features normally found in pumps furnished for the residential market.

These features include:

1. The pump volute, motor, and seal housing shall be high quality gray cast iron, ASTM A-48, Class 30.
2. The pump inlet shall be open and clear, without screening to provide access for sewage and solids.
3. All external mating parts shall be machined and Buna N, O-Ring sealed.
4. All fasteners exposed to the pumped liquid shall be 300 series stainless steel.
5. All power cords shall be water resistant UL or CSA approved, with double insulation, and sized as a function of Amp. draw.

5.01 **MOTOR AND SHAFT**

The stator, rotor and bearings shall be mounted in a sealed submersible type housing. Single phase motors shall be split phase or capacitor start with centrifugal switch. Three phase motors shall be Polyphase. Full Load and Locked Rotor Amps as well as Start and Run winding resistance shall be tabulated for each pump.

6.01 **BEARINGS, SHAFT AND MECHANICAL SEAL**

An upper bushing bearing and lower thrust bearing shall be required. The upper bearing shall be brass while the lower bearing is a heavy duty single row ball. They are both permanently and continuously lubricated and cooled by the dielectric oil which fills the motor housing. The motor shaft shall be stainless steel and sealed from the pumped liquid with a carbon ceramic mechanical seal.

SK60
SUBMERSIBLE SEWAGE EJECTOR

7.01 **IMPELLER**

The Impeller shall be high capacity, two vane, non-clog design with pump out vanes on the back side. These vanes wash out grit and stringy material that will damage the shaft and mechanical seal.

8.01 **AUTOMATIC CONTROL**

All single phase pumps should be capable of automatic operation.

9.01 **PRESSURE SWITCH**

The Single Phase SK60 pump is furnished with a pressure diaphragm switch that features a piggy-back plug that allows the pump to be operated manually without removal from the sump.

10.01 **PAINTING**

All cast iron parts shall be painted before assembly with a water reducible alkyd air dried enamel. The paint shall be applied in one coat with a minimum thickness of 3 to 4 mils.

11.01 **TESTING**

All pumps shall be individually tested to include the following:

1. The pump and power cord shall be visually inspected for imperfections, cuts or nicks.
2. The pump shall have a ground continuity check and the motor chamber shall be Hi-potted to test for moisture content and/or insulation defects.
3. The motor and volute housing shall be pressurized and a 10 second air leak decay test run.
4. Oil is added, and the pump is run. Voltage and current are monitored visually, electronically, and the tester listens for any noise or malfunction.

PENTAIR

USA
293 WRIGHT STREET, DELAVAN, WI 53115 WWW.HYDROMATIC.COM
PH: 888-957-8677 ORDERS FAX: 800-426-9446

CANADA
269 TRILLIUM DRIVE, KITCHENER, ONTARIO, CANADA N2G 4W5
PH: 519-896-2163 ORDERS FAX: 519-896-6337

Because we are continuously improving our products and services, Pentair reserves the right to change specifications without prior notice.

© 2013 Pentair Ltd. All Rights Reserved.

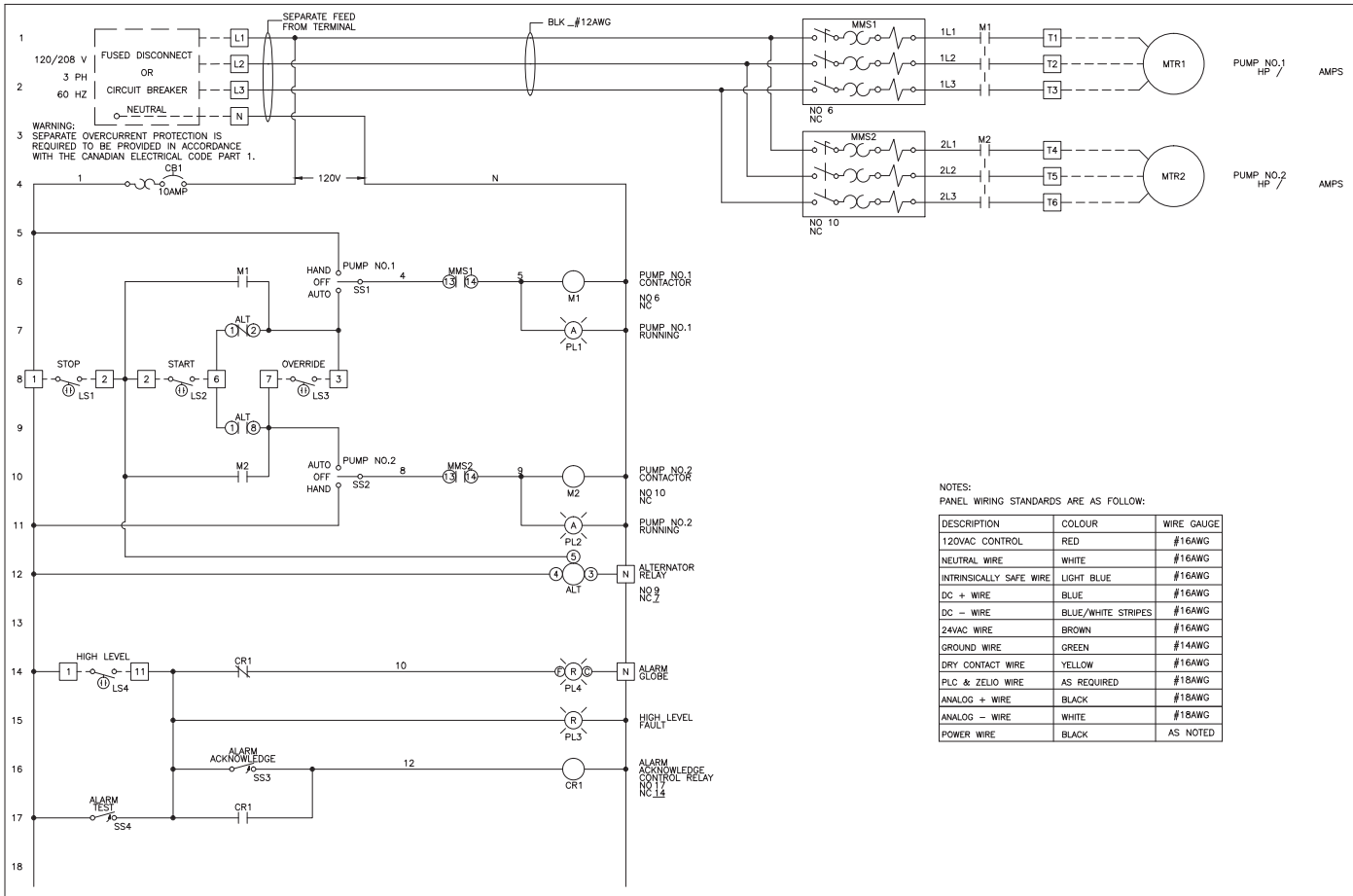

NOTES:
PANEL WIRING STANDARDS ARE AS FOLLOW:

DESCRIPTION	COLOUR	WIRE GAUGE
120VAC CONTROL	RED	#16AWG
NEUTRAL WIRE	WHITE	#16AWG
INTRINSICALLY SAFE WIRE	LIGHT BLUE	#16AWG
DC + WIRE	BLUE	#16AWG
DC – WIRE	BLUE/WHITE STRIPES	#16AWG
24VAC WIRE	BROWN	#16AWG
GROUND WIRE	GREEN	#14AWG
DRY CONTACT WIRE	YELLOW	#16AWG
PLC & ZELIO WIRE	AS REQUIRED	#18AWG
ANALOG + WIRE	BLACK	#18AWG
ANALOG – WIRE	WHITE	#18AWG
POWER WIRE	BLACK	AS NOTED

Pentair Canada Inc
490 Pinebush Road, Unit #4
CAMBRIDGE, ONTARIO N1T 0A5
CANADA

CONTROL PANEL
DUPLEX PUMPS SK60
P-2.3 & P-2.4 , P-2.5 & P-2.6

REV	DESCRIPTION	BY	DATE	REV	DESCRIPTION	BY	DATE

REV'D | REF
DESIGNED I. MURRAY | SCALE N.T.S.
DRAWN I. MURRAY | CAD REF. PEN07398A-1
DATE JUNE 12, 2018 | SHT NO. 1 OF 2

TITLE
DUPLEX PUMP CONTROL SYSTEM
MODEL NO. CP15-03DW

DWG NO. PS617- . | REV 0

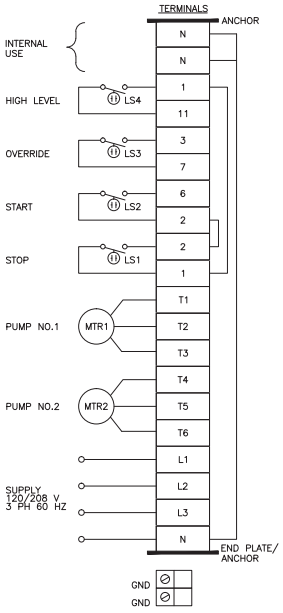

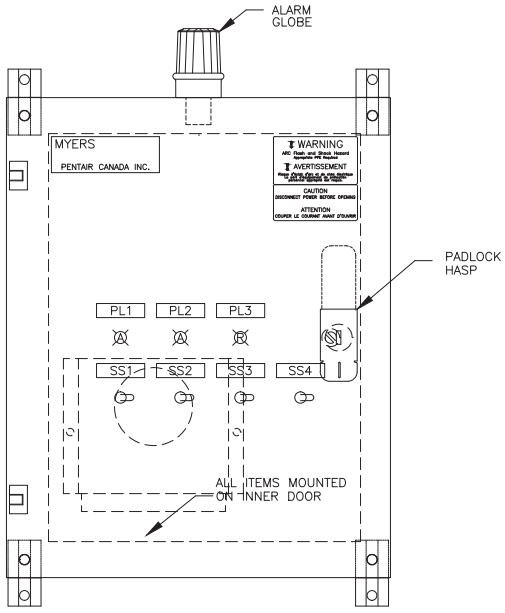

EEMAC 4X PAINTED STEEL ENCLOSURE 20" X 16" X 8"

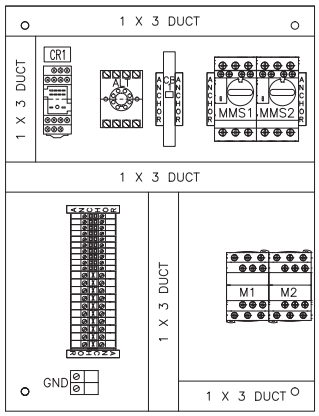

PANEL LAYOUT

Pentair Canada Inc 490 Pinebush Road, Unit #4 CAMBRIDGE, ONTARIO N1T 0A5 CANADA		CONTROL PANEL							REV'D	REF		TITLE	DUPLEX PUMP CONTROL SYSTEM MODEL NO. CP15-03DW
		DUPLEX PUMPS SK60							DESIGNED I. MURRAY		SCALE 1/4" = 1"		
		P-2.3 & P-2.4 P-2.5 & P-2.6							DRAWN I. MURRAY		CAD REF. PEN07398A-2		
	REV	DESCRIPTION	BY	DATE	REV	DESCRIPTION	BY	DATE	DATE JUNE 12, 2018		SHT NO. 2 OF 2	DWG NO. PS617- .	REV 0

CSB4-SS

FLOAT BRACKET FOR MOUNTING UP
TO (4) FOUR CONTROLS

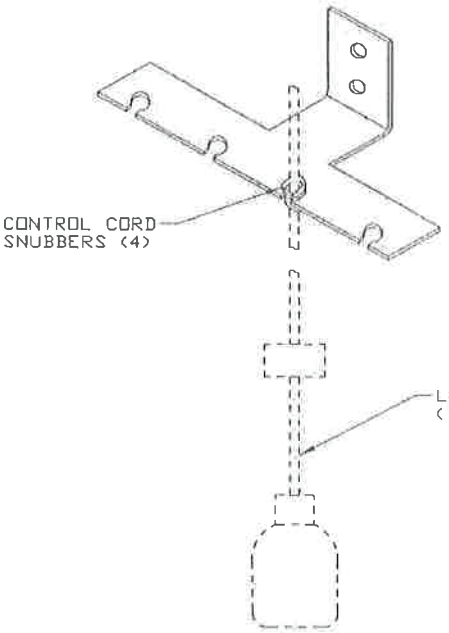

bracket is 11' wide
and 4" deep 3" high

CSB5-SS

FLOAT BRACKET FOR MOUNTING UP
TO (5) FIVE CONTROLS

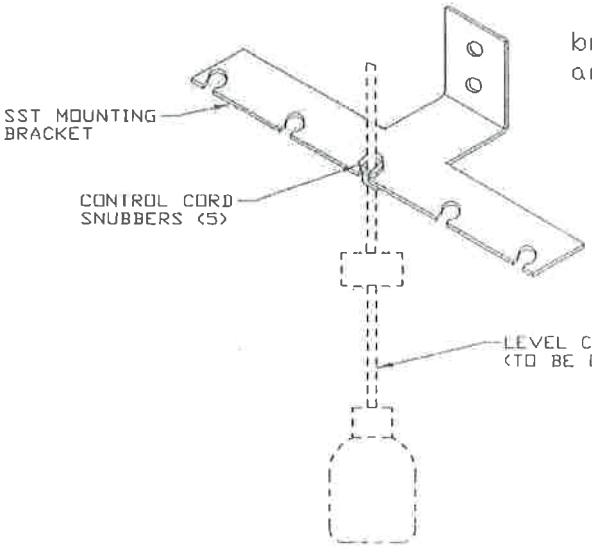

bracket is 14' wide
and 4" deep 3" high

ES-2365A

SJE SIGNALMASTER® Control Switch

Mechanically-activated, narrow-angle float switch designed to activate pump control panels and alarms.



This narrow-angle sensing device is used to accurately monitor liquid levels in:

- water
- sewage applications

The SJE SignalMaster® control switch is not sensitive to rotation.

Normally Open Model (high level)
The control switch turns on (closes) when the switch tips slightly **above** horizontal signaling a high level, and turns off (opens) when the switch drops slightly below horizontal.

Normally Closed Model (low level)
The control switch turns on (closes) when the switch tips slightly **below** horizontal signaling a low level, and turns off (opens) when the switch tips slightly above horizontal.

FEATURES

- Mechanically-activated, snap action contacts.
- High impact, corrosion resistant, polypropylene float housing.
- Not sensitive to rotation.
- Control differential of 1.5 inches (4 cm) above or below horizontal.
- Yellow colored cap for easy identification of normally open control switch.
- White colored cap for easy identification of normally closed control switch.
- UL Listed for use in water and sewage.
- CSA Certified.
- Five-year limited warranty.

SSPMA MEMBER

LR54245

LISTED 83N2

Member of: Hydraulic Institute

SPECIFICATIONS

CABLE: flexible 18 gauge, 2 conductor (UL, CSA) SJOW, water-resistant (CPE)

FLOAT: 2.74 inch diameter x 4.83 inch long (7.0 x 12.3 cm) high impact, corrosion resistant, polypropylene housing for use in sewage and water up to 140°F (60°C)

MAXIMUM WATER DEPTH: 30 feet (9 meters), 13 PSI (90 kPa)

ELECTRICAL: 5 amp, 125/250 VAC, 50/60 Hz

NOTE: This switch is not recommended for controlling:

- electric loads less than 100 milliamps, 12 VAC
- non-arcing electric loads

OPTIONS

This switch is available:

- CE certified unit available upon request.
- for normally open (high level) applications or normally closed (low level) applications.
- in standard cable lengths of 10, 15, 20, or 30 feet and 3, 5, 6, or 10 meters (longer lengths available)
- with two mounting options that allow for flexibility in installation:

  Mounting Clamp: for applications where the switch can be attached to a discharge pipe or similar mounting device.

  Externally Weighted: for applications where the switch can be suspended from above.

SEE BACKSIDE FOR ORDERING INFORMATION.
SEE PRICE BOOK FOR LIST PRICE.

SJE Rhombus®
PO Box 1708, Detroit Lakes, MN 56502
1-888-DIAL-SJE • 1-218-847-1317
1-218-847-4617 Fax
email: customer.service@sjerhombus.com
www.sjerhombus.com

SJE SIGNALMASTER® Control Switch

Mechanically-activated, narrow-angle float switch designed to activate pump control panels and alarms.

ORDERING INFORMATION

Normally Open		Normally Closed		Shipping Weight
Part #	**Description**	**Part #**	**Description**	
1006042	10SGMPCNO	**1006046**	10SGMPCNC	1.04 lbs.
1006050	10SGMWENO	**1006054**	10SGMWENC	2.13 lbs.
1006043	15SGMPCNO	**1006047**	15SGMPCNC	1.37 lbs.
1006051	15SGMWENO	**1006055**	15SGMWENC	2.45 lbs.
1006044	20SGMPCNO	**1006048**	20SGMPCNC	1.69 lbs.
1006052	20SGMWENO	**1006056**	20SGMWENC	2.70 lbs.
1006045	30SGMPCNO	**1006049**	30SGMPCNC	2.34 lbs.
1006053	30SGMWENO	**1006057**	30SGMWENC	3.43 lbs.

PC = **P**ipe **C**lamp **WE** = **W**eighted **E**xternally **NO** = **N**ormally **O**pen **NC** = **N**ormally **C**losed
NOTE: Descriptions are grouped by cable length measured in feet (10, 15, 20, 30).
SEE PRICE BOOK FOR LIST PRICE.

OPTIONS

MOUNTING CLAMP
is standard - deduct optional

PACKAGING
Bagged - standard.
Boxed - optional
Bulk - optional

ADDITIONAL CABLE
Longer cable lengths available. Please call for details.

UL Listed for Water & Sewage

LISTED 83N2 LR54245

SSPMA MEMBER

SPECIFICATIONS

CABLE: flexible 18 gauge, 2 conductor (UL) SJOW, water-resistant (CPE)

FLOAT: 2.74 inch diameter x 4.83 inch long (7 x 12.3 cm), high impact, corrosion resistant polypropylene for use in sewage and water up to 140°F (60°C)

MAXIMUM WATER DEPTH: 30 feet (9 meters), 13 psi

ELECTRICAL: 5 amp, 125/250 VAC, 50/60 Hz

This switch is not recommended for controlling:

- electric loads less than 100 milliamps, 12 VAC
- non-arcing electric loads

OTHER INFORMATION

NORMALLY OPEN (high level) OPERATION
The control switch closes (turns on) when the float tips slightly **above** horizontal signaling a high level, and opens (turns off) when the float drops slightly **below** horizontal in water or sewage applications.

NORMALLY CLOSED (low level) OPERATION
The control switch closes (turns on) when the float tips slightly **below** horizontal signaling a low level, and opens (turns off) when the float tips slightly **above** horizontal in water or sewage applications.

Call or fax your order!
1-888-DIAL-SJE (1-888-342-5753) Fax 218-847-4617

SJE Rhombus®
www.sjerhombus.com
customer.service@sjerhombus.com

9500115A

© SJE-Rhombus 07/16

FLOAT ACCESSORIES

Cable Clamp Assembly, Float Brackets, Pipe Mounting Bracket, Cable Weights, ETM w/ Piggy-Back Plug, Vertical Reed Switch, Anchor and Chain

CABLE WEIGHT

Provides an accurate pivot point for suspended float switches.



U.S. Patent 5,306,885

- Gripper teeth on clip and weight channel securely lock float cable into place
- Cable Weight can be adjusted without the use of tools

HOUSING: 1 pound, 12 ounce (0.8 kgs.), 2.8 inch diameter x 3.3 inch long (7.1 cm diameter x 8.4 cm), impact resistant, non-corrosive, PVC housing for use in liquids up to 140°F (60°C).

CLIP: injection molded acetal plastic
WIRE/CABLE ACCOMMODATED: SJOW, SJTW, 18/2, 18/3, 16/2, 16/3, 14/2 and 14/3
SHIP WEIGHT: 2 lbs. (.907 kgs)

Part Number	Description
1002230	Cable Weight

CABLE WEIGHT MINI

Provides an accurate pivot point for suspended float switches.



- One piece cable weight
- Turn and Lock for easy installation.

HOUSING: 9.6 ounces (0.27 kgs.), 2.5 inch diameter x 2.5 inch long (6.35 cm diameter x 6.35 cm), impact resistant, non-corrosive, PVC housing for use in liquids up to 140°F (60°C)
WIRE/CABLE ACCOMMODATED: SJOW, SJTW, 18/2, 18/3

Part Number	Description
1030356	Cable Weight Mini

ELAPSED TIME METER WITH PIGGY-BACK PLUG

Plugs into switched outlet or piggy-back switch of plugger control panel. Unit must be placed inside an enclosure.



- Screws and mounting adhesive included.

Part Number	Description
1022846	ETM w/120V piggy-back plug
1032834	ETM w/230V piggy-back plug

VERTICAL REED SWITCH



- Control differential: .375 inch (1 cm)
- Maximum angle from vertical: 5°
- Electrical: 250 mAmps, 12-125 VAC, 50/60 Hz
  500 mAmps, 6-12 VDC, 50/60 Hz
- Housing and Float: 1.60 inch diameter x 6.7 inch long (4.06 cm X 17.01 cm), high impact, corrosion resistant PVC for use in sewage and non-potable water up to 120°F (50°C)

Part Number	Description
1011027	10ft VRS 120V Bulk
1016561	15ft VRS 120V Bulk

ANCHOR



- 10 lb. weight
- Yellow, vinyl coated, mushroom style

Part Number	Description
1018687	10 lb. Mushroom Anchor

CHAIN



- 1/8" thickness
- 316 grade stainless steel
- Available in one foot increments

Part Number	Description
1018823	1/8 inch Chain

PRODUCTS CONTINUED ON NEXT PAGE.
SEE PRICE BOOK FOR LIST PRICES.

SJE Rhombus®
PO Box 1708, Detroit Lakes, MN 56502
1-888-DIAL-SJE • 1-218-847-1317
1-218-847-4617 Fax
email: sje@sjerhombus.com
www.sjerhombus.com

Ball Check Valve

Model 208T

Sizes 1" Thru 2"/ 25mm thru 50mm

FLOMATIC®
Flomatic Corporation

Materials

NOTE: PLASTIC VALVES SHOULD NOT BE BURIED UNDERGROUND

LOW-LEAD IAPMO R&T NSF/ANSI 372 #1 Pb Lead-Free

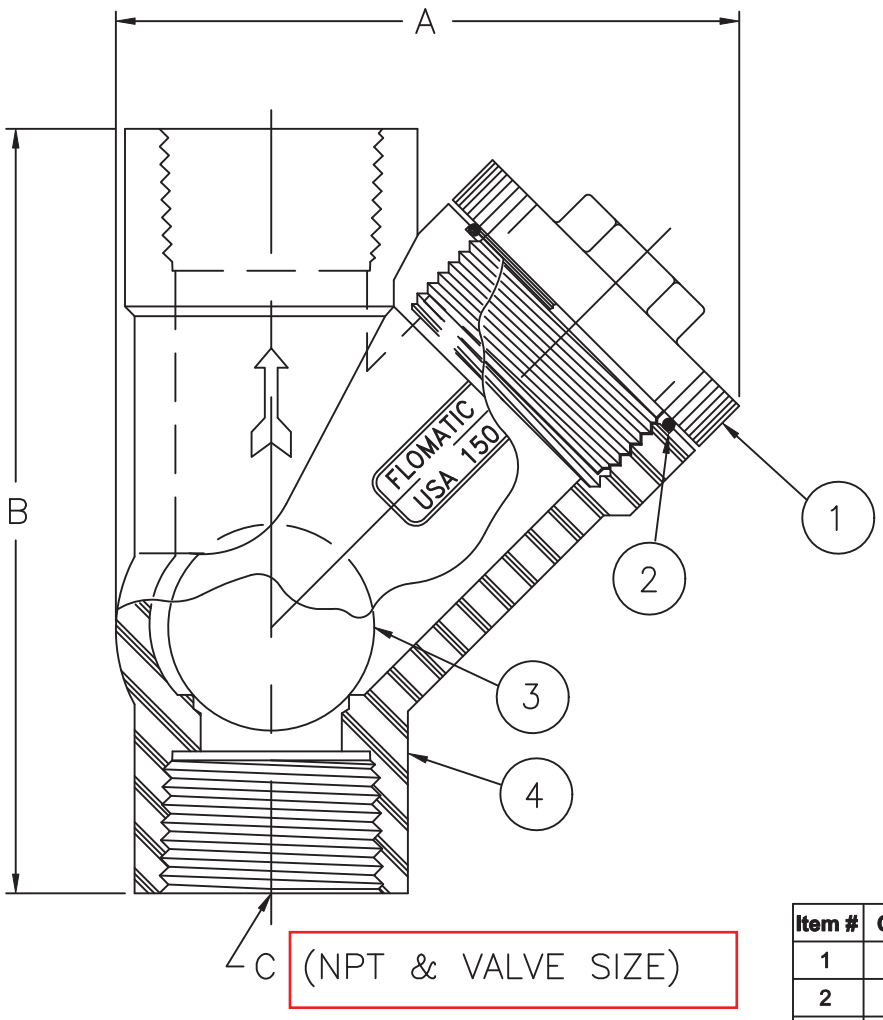

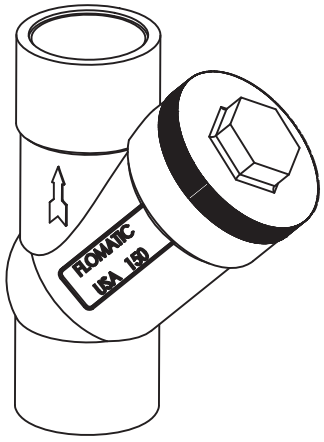

Item #	Qty	Description	Material
1	1	Cap	PVC
2	1	O'Ring	Buna-n
3	1	Ball (Sinking)	Buna-n
4	1	Body	PVC
5	2	Bushing (not shown)*	PVC

*Uses bushing not shown
Max Temp 150°F (65°C)
Max Inlet Pressure 100 psi (7 bar)

Dimensions

Size		Part #	A		B		Weight	
inch	mm		inch	mm	inch	mm	lbs	kg
1*	25	2131-T*	4-1/2	114	6-27/32	174	1	.45
1-1/4	32	2132-T	4-1/2	114	5-21/32	144	1	.45
1-1/2*	40	2133-T*	6-11/32	161	8-13/64	208	2	.91
2	50	2134-T	6-11/32	161	7-1/16	179	2	.91

Flomatic Corporation can accept no responsibility for possible errors in catalogues, brochures and other printed material. Flomatic Corporation reserves the right to alter its products without notices. This also applies to product already agreed. All trademarks in this material are property of the respective companies. All right reserved. ©2016 Flomatic Corporation. The drawings & information on this drawing sheet are the sole & exclusive property of Flomatic Corporation. Any reproduction, distribution, display or use of these drawings or information in whole or in part without written authorization of Flomatic Corporation is strictly prohibited.

FLOMATIC® VALVES

November 1, 1991
Dwg No:S2131-34 Rev: L (11/16)

FLOMATIC CORPORATION
GLENS FALLS, N.Y. 12801
PHONE (518) 761-9797
FAX (518) 761-9798

COMPACT PVC / CPVC BALL VALVES

PVC Ball Valves

0929 Series 1/2" - 4" Threaded (FPT)
0929S Series 1/2" - 4" Slip

- 150 PSI Working Pressure @ 73°F (22°C)
- Temperature Rating: 32°F to 122°F (0°C to 50°C)
- EPDM Seats/EPDM O-ring Seal
- White PVC Molded Body with Black PVC Handle

PVC Ball Valves

0921 Series 1/2" - 4" Threaded (FPT)
0921S Series 1/2" - 4" Slip

- EPDM Seats/EPDM O-Ring Seal
- White PVC Body with Black PVC Handle
- NSNSF/ANSI Standard 61 & 372 Certified

0923 Series 1/2" - 2" Threaded (FPT)
0923S Series 1/2" - 2" Slip

- 150 PSI Working Pressure @ 73°F (22°C)
- Temperature Rating: 41°F to 122°F (5°C to 50°C)
- PTFE Seats/Viton O-ring Seal
- White PVC Body with Red PVC Handle

Refer to Temperature Correction Factors

NO LEAD LEAD-FREE — Third Party Certified to NSF / ANSI 372



CPVC Hot Water System Ball Valves

0922CTS Series 1/2" - 2" Threaded (CTS x CTS)

- 150 PSI Working Pressure
- Temperature Rating: Continuous 194°F (90°C)
  Short Hours 212°F (100°C)
- PTFE Seats/EPDM O-ring Seal
- Beige CPVC Molded Body with Red Handle
- NSF/ANSI Standard 61 & 372 Certified

UNION PVC BALL VALVES

PVC Blocked True Union Ball Valves

0924 Series 1/2" - 2" Threaded (FPT)

- Double Union/Double block design permits in-line maintenance without disconnecting pipe
- Bayonet style locks prevent ball from being blown out
- Handle equipped with removable spanner devise
- Full unobstructed flow without any turbulence or pressure drop
- Working Temperature Range: 41°F to 122°F (5°C to 50°C)
- 150 PSI Working Pressure at 73°F (22°C)
- EPDM O-rings
- Suitable for both schedule 40 & 80 PVC pipe

Shipped complete with both thread and slip interchangeable connections



NO LEAD LEAD-FREE — Third Party Certified to NSF / ANSI 372

PVC Blocked True Union Ball Valves

0925NL Series 1/2" - 4" EPDM "O" RING SEAL ← 2"
0926 Series 1/2" - 4" VITON "O" RING SEAL

- 2-Way Blocking True Union Ball Valve - 150 PSI Working Pressure @ 73°F (22°C)
- Unique Double Union/Double Block design permits in-line maintenance without disconnecting pipe
- Both ends blocked with bayonet-style locks which prevent ball from being blown out
- Handle equipped with removable spanner device
- Full, unobstructed flow without any turbulence or pressure drop
- Available with either EPDM or Viton "O"-ring seals
- Self Lubricating PTFE (polytetrafluoroethylene) Seats are corrosion and chemical resistant
- Quick and easy disassembly without use of special tools, hand tighten only
- Suitable for both schedule 40 & 80 PVC pipe

PVC Single Union Ball Valves

0933 Series 1-1/2" - 2" Threaded (FPT)
0933S Series 1-1/2" - 4" Slip

- Threaded or socket
- Working Pressure 150 PSI @ 73°F
- Lightweight and compact design suitable for plumbing, pool and spa field
- PTFE (polytetrafluoroethylene) seat is corrosion and chemical resistantto most chemicals
- Non blocking design
- Suitable for both schedule 40 & 80 PVC pipe

PENTAIR

HYDROMATIC®

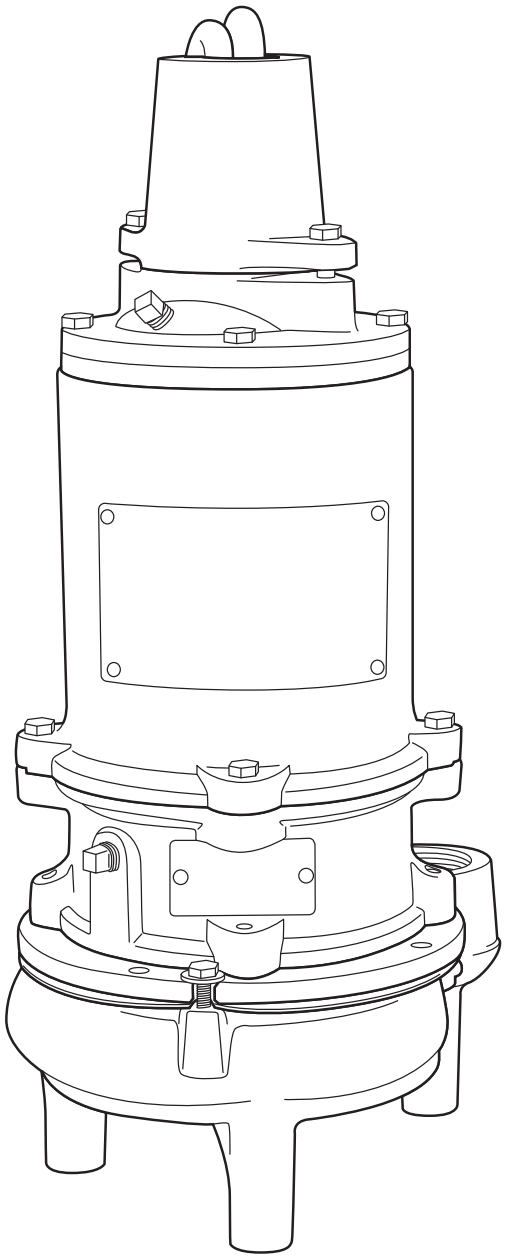

MODELS SPX50/SPX50H
SUBMERSIBLE HAZARDOUS LOCATION PUMPS

INSTALLATION AND SERVICE MANUAL

NOTE! To the installer: Please make sure you provide this manual to the owner of the equipment or to the responsible party who maintains the system.

Item # E-03-415 | Part # 5625-415-1 | © 2012 Pentair Pump Group, Inc. | 11/12/12

General Information

Thank you for purchasing your Hydromatic® Pump. To help ensure years of trouble-free operation, please read the following manual carefully.

⚠ CAUTION

Read these safety warnings first before installation, servicing or operating any pump. These instructions are written with the understanding that the individuals have experience in building wet wells and installing basins, grinder pumps and pumping equipment. Do not discard or misplace this manual.

CALIFORNIA PROPOSITION 65 WARNING:

⚠WARNING This product and related accessories contain chemicals known to the State of California to cause cancer, birth defects or other reproductive harm.

NOTE: Models with Third Party approval(s) are clearly marked on individual pump nameplates.

Safety Warnings

Before Installation:

This manual contains important information for the safe use of this product. Read this manual completely and follow the instructions carefully. Reasonable care and safe methods relating to the installation and operation of this product should be practiced. Check local codes and requirements before installation.

Must be installed by experienced professionals only.

Hazardous Location Service:

SPX50 pumps are to be used for handling sewage, wastewater and storm water only. **DO NOT** use in other hazardous locations. These motors must be repaired and serviced only at Hydromatic authorized service centers or at the Hydromatic factory.

Any unauthorized field repair voids the warranty, the hazardous location rating and CSA certification.

⚠ DANGER

Risk of Electrical Shock or Electrocution. May result in serious injury or death or fire hazard. Installer must disconnect all electrical sources prior to installation, handling or servicing. Only qualified personnel may install or service this system. NFPA 70/National Electric Code (NEC) or local codes must be followed. System must be properly grounded according to NEC. Do not lift pump by power cord.

⚠ DANGER

Biohazard Risk. Once wastewater source has been connected to system, biohazard risk exists. Installer(s) and/or service personnel must use proper personal protective equipment and follow handling procedures per OSHA 29 CFR 1910.1030 when handling equipment after wastewater source has been connected to system.

⚠ DANGER

Risk of Asphyxiation. Installer(s) and/or service personnel must use proper personal protective equipment and follow OSHA 29 CFR 1910.146 or OSHA 29 CFR 1926. Pump may be installed in a location classified as a confined space. Basin or wet well to be vented per local code.

⚠ DANGER

Risk of Fire or Explosion. Do not smoke or use open flames in or around this system. Do not pump flammable liquids. Consult factory for optional equipment rated for hazardous location use.

⚠ CAUTION

DO NOT modify the cord strain relief. **DO NOT** operate pump with frayed or damaged power cord. **DO NOT** handle cord with wet hands. **DO NOT** let cords lie in water.

⚠ CAUTION

DO NOT run the pump dry. Dry running can overheat the pump (causing burns to anyone handling it) and will void the warranty. The pump normally runs hot. To avoid burns, allow it to cool for 30 minutes after shutdown before handling it.

⚠ CAUTION

Submersible sump and sewage pumps are not approved for use in swimming pools, recreational water installations, decorative fountains or any installation where human contact with the pumped fluid is common.

⚠ WARNING

On three phase pumps only "motor protection" must be provided by the installer. All three phase pumps must be installed with magnetic starters having three leg overload protection in accordance with the national electric code. For installations with more than one pump, each pump motor must have separate overload protection.

⚠ WARNING

Only qualified persons shall conduct services and installations of this pump. The pump must be wired by a qualified electrician, using an approved starter box.

NOTICE: For use with maximum 104°F liquid. Acceptable for indoor use only.

⚠ WARNING

DO NOT exceed working load limit of lifting rope or chain. DO NOT use lifting rope or chain where failure could result in injury or loss of life. Examine all lifting devices, rope or chain for damage before and after each lift.

⚠ CAUTION

DO NOT exceed manufacturer's recommendation for maximum performance, as this could cause the motor to overheat.

⚠ CAUTION

Secure the pump in its operating position so it cannot tip over, fall or slide.

⚠ CAUTION

Keep hands and feet away from impeller when power is connected.

For hazardous locations, use pumps that are listed and classified for such locations.

IMPORTANT: Hydromatic is not responsible for losses, injury or death resulting from failure to observe these safety precautions, misuse or abuse of pumps or equipment.

Pump Information

Pump Models:

These instructions cover the installation and service of the Hydromatic SPX50 and SPX50H series submersible sump pumps.

Motor HP & Voltages:

The SPX50/SPX50H sump pumps are offered in single and three phase. Voltages will vary according to power supplied.

Control Panels:

NOTE: Hydromatic built control panels supply the correct circuitry for moisture and heat sensor connections. Failure to install the correct circuitry with proper connection would negate warranty and CSA certification.

General Hazardous Construction:

These pumps are to be used for handling contaminated septic tank effluent, sewage, and storm water only. The SPX50/SPX50H motor construction is designed to meet CSA requirements for Group 1, Div. 1, Class D wastewater applications. These models are certified and nameplated with this approval. Do not use in other hazardous location environments pumps are not rated for. A cross-sectional view of the internal workings of the pumps can be seen on pages 12 & 13. The motor chamber and seal chamber are filled with a high dielectric type oil for improved lubrication and heat transfer of the bearings and motor. The oil should not require replacement under normal operating conditions. An air space above the oil level in both the seal and motor chambers is provided to allow for the expansion of the oil when at operating temperature.

Internal connection wiring diagrams are shown on page 6.

General Installation:

Various configurations and methods of plumbing this series of sump pumps may be used.

NOTE: If the SPX50 and SPX50H hazardous location pumps are used in conjunction with a rail lift-out system, it must be a UL or CSA approved nonsparking, hazardous location system.

Hydromatic recommends using the rail lift-out system so that no service is required inside the basin.

IMPORTANT: If the following guidelines are not followed, the CSA hazardous location approval is void.

Motor:

Each motor is provided with heat sensor thermostats attached directly to the motor windings. The thermostats open if the motor windings experience excessive heat and, consequently, open the

motor contactor in the control panel, interrupting power to the pump. When the motor is stopped due to an overheat condition, it will not start until the motor has cooled and the heat sensor reset button is manually pushed on the front of the Hydromatic control panel. This circuitry is provided in the Hydromatic control panel designs.

The SPX50 and SPX50H pumps are equipped with internal thermostats. The SPX50 and SPX50H models are designed to meet Class B heat rise of 266°F (130°C).

NOTE: Failure to use proper circuitry and to connect the motor overheat protection in the control panel would negate all warranties and CSA listings.

Motor Seal Failure Warning:

The seal chamber is oil filled and provided with moisture sensing probes to detect water leakage through the lower shaft seal. The probes also detect moisture present in the upper motor housing.

The contamination of water energizes a red seal leak warning light at the control panel. This is a warning light only, and does not stop the motor. It indicates a leak has occurred and the pump must be repaired. Normally, this indicates the outboard seal has leaked. Allowing the unit to operate too long after the warning could cause upper seal leakage along with motor failure.

The resistance across the moisture sensing (seal failure) probes should be checked after a seal leak warning light has been activated. This can be done by disconnecting the red and orange control wires from the control panel and measuring the resistance with an ohmmeter between the wires. For a hazardous location pump the reading should be above 30,000 ohms. If the measured values are below those indicated above, the pump may have a lower seal failure and require service.

On the Hydromatic hazardous location control panels the seal leak test switch tests the seal leak circuit continuity. When pushed, the seal leak test bulb should light. If the test bulb does not light, it means either the wiring circuitry to the seal leak probes has been broken or the bulb has burned out.

Motor Power Cord, Control Cord and Cord Cap Assembly:

Each motor power cord has 4 conductors: white, black, red and green. For a single phase motor the black is connected to the common lead, the white is connected to the main lead, while the red is connected to the start circuitry, and the green is attached to ground. The rotation of a single phase pump is set properly at the factory. For three phase, red, black and white are power leads and green is ground.

Three Phase: When pump is installed to operate on three phase power, pump rotation must be checked. For inside installation where control box is near the sump basin, pump can be laid on side to check rotation before installing in sump.

To check rotation turn Hand-Off-Auto switch to Off position and turn on circuit breaker. Quickly turn H-O-A switch to Hand position, then Off. Note impeller rotation. Impeller must rotate counterclockwise. If rotation is wrong, change any two line leads to motor at control box terminal. Recheck for proper rotation.

Where pump is installed remote from control box in outside installation a different method is used.

Set the pump in the basin and run in some water so pump can operate. Turn H-O-A switch to Hand position and let pump pull water down in basin. When water reaches the bottom of pump, rotation of the water can be observed. Water should rotate in a clockwise direction if pump rotation is correct. If not correct rotation, interchange any two line leads to motor at control panel.

When replacing a pump with a new unit, rotation must be checked.

The control cable has 5 conductors: black, white, red, orange and green. White and black connect to the heat sensor terminals in the control panels; red and orange connect to the seal failure terminals in the control panel; and the green connects to the ground in the control panel.

The cord cap is epoxy potted. This allows the cord cap, with cords, to be removed from the motor. With this arrangement, the cords can be permanently installed in a sealed fitting in the sump. This must be an approved hazardous location junction box for hazardous locations. The control and power cables cannot be spliced!

Electrical Motor Controls:

All electrical controls and motor starting equipment should be purchased from Hydromatic. Consult factory for any acceptable alternatives. Consult national and local codes for proper location of controls and control panels.

Junction Box:

If a junction box is used in a hazardous location, it must follow national and local codes for placement inside a hazardous area.

Level Sensing Controls:

Intrinsically safe-type float controls are recommended for all applications and required for hazardous location service. An intrinsically safe control panel relay will limit the current and voltage to the level controls. A Hydromatic control panel can be supplied with this type circuitry.

The float level controls maintain the basin sewage water level by controlling pump turn-on and turn-off levels.

1. The lower turn-off control should be set so that the pump stops with the water covering the entire motor housing. Consult the factory for any settings below this point.
2. The upper turn-on control should be set above the lower turn-off control. The exact height between the two controls is determined by the number of pump starts desired and the depth of the basin. A maximum of 10 starts per hour should not be exceeded.
3. The override control is set at a specified height above the upper turn-on control.
4. The alarm control is set about 6" to 12" above the override control.
5. No control should be set above the inlet invert.

Electrical Connections:

All electrical wiring must be in accordance with local code and only qualified electricians should make the installations. Complete wiring diagrams are included for use in making the installation. All wires should be checked for shorts to ground with an ohmmeter or Megger after the connections are made. This is important, as one grounded wire can cause failure of the pump, control panel or personal injury.

Pump:

The fluid end of the pump is field serviceable and can be disassembled in case of wear, damage, plugging or outboard seal failure. The following will describe the disassembly and reassembly process.

WARNING: Disconnect the power first.

Disassembly:

1. With the pump located in a secure place, remove the bolts fastening the seal housing to the volute. The motor and impeller can now be removed as a unit.
2. Lay the unit down on its side. If the lower seal is to be removed, it is recommended that the oil in the seal chamber be drained. This can be done by removing the lower seal chamber plug and draining the oil into a holding container.
3. Using a proper wrench, the impeller retaining nut must be removed. This may require a piece of wood placed between the vanes to keep the impeller from rotating while removing the nut. Loctite™ is used on this bolt and heating to 450°F to 500°F may also be required to loosen. The impeller is mounted on a threaded shaft. To remove impeller, rotate impeller with one hand while holding pump shaft with screwdriver.
4. If the lower seal needs to be removed, first remove the compression spring that rides between the impeller and the seal assembly. Next take a pair of screwdrivers and remove the compression ring that surrounds the rubber bellows on the rotating portion of the seal assembly. Again using the screwdrivers, pry the remaining portion of the rotating seal assembly off the shaft. The ceramic stationary assembly can be removed by placing a screwdriver between the rubber and the ceramic face, and then prying, working around the entire diameter. Note, these parts should be discarded and a new seal assembly installed.
5. If the oil in the seal chamber was drained, examine the contents to determine if the upper seal has been damaged. Signs of grit or other abrasive material may indicate that the upper seal has also been damaged. Pressurizing the motor housing assembly between 7 and 10 psi and observing any drop in pressure will indicate if the upper seal is functioning properly.

NOTE: Upper seal repairs must be done at a Hydromatic authorized service center or at the Hydromatic factory. Any unauthorized field repair voids warranty and the hazardous location approval on the CSA listed pumps.

Reassembly:

1. Remove the ceramic portion of the new seal from the package. Brush new dielectric oil around the rubber portion of the stationary assembly and into the pocket in the seal housing. Note, keep the

oil off the seal face. Without scratching the seal face, press the ceramic stationary portion into the seal housing. Seal installation tool can be ordered from Hydromatic. With clean cloth, lightly wipe the face of the seal surface to make sure it is dirt free. Remove the rotating portion of the seal from the package and lubricate the inside diameter of the rubber bellows and the outside diameter of the shaft. Place the seal over the shaft with the seal installation tool. Evenly press on the body of the rotational assembly and slide it down the shaft until the seal faces meet. Once the seal assembly is in position, place the spring over the register on the rotational portion of the seal.

2. Thread the impeller onto the shaft, making sure that the seal spring is registered properly onto the back side of the impeller. Place the proper Loctite fluid on the impeller retaining nut. Tighten nut on shaft.

3. Fill the seal chamber with new dielectric oil. An air gap of 10–15% volume must be left for the expansion of the oil when it is at operating temperature.

4. The motor and impeller assembly can be installed into the volute, making sure that the units are aligned properly. Install the volute retaining bolts and tighten.

5. Air tends to trap in the pump case when water rises in the sump or when the pump is lowered into the water after service. To vent off this air, a small hole is drilled into the volute casting. Be sure this vent hole is clean after any service work on pump. Air venting is not a problem after initial start.

WIRING DIAGRAMS

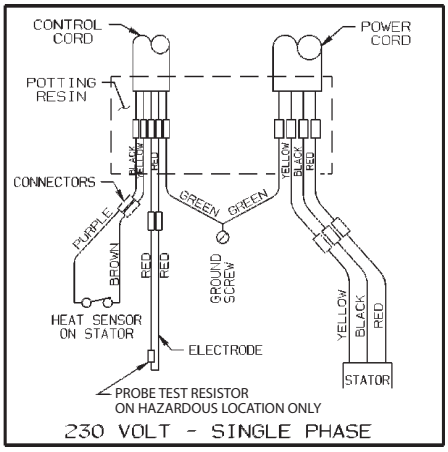

Pump Troubleshooting

Checking for Moisture in Motor:

Use an ohmmeter or a Megger and set on highest scale. Readings on the large power cord between any of the conductors red, black or white to the green conductor or to the motor housing should be greater than 1,000,000 ohms (megohm).

A motor will probably run with a lower reading, but if the pump is out of service and the value of the reading is below 1,000,000 ohms (1 megohm), the motor housing and stator should be removed and baked in a drying oven at 220°F. This service work must be done only at an authorized service station.

NOTE: Readings should be taken with the line leads disconnected from the control panel.

Below is a list of troubles and their probable causes:

Red light comes on at control box.

This indicates some water has leaked past the lower seal and has entered the seal chamber and made contact with the electrode probe. Pump must be removed for replacement of lower seal. This preventive repair will save an expensive motor.

Overload trips at control box and alarm buzzer or flashing red light comes on due to high water level in basin.

1. Push in on red reset button to reset overload. If overload trips again after short run, pump has some damage and must be removed from basin for checking.
2. Trouble may be from clogged impeller causing motor to overload or could be from failed motor.
3. Trouble may be from faulty component in control box. Always check control box before removing pump.

Yellow run light stays on continuously.

1. Indicates H-O-A switch may be in the Hand position.
2. Level control switch may have failed, causing pump to continue to operate when water is below lower control.
3. Impeller may be partially clogged, causing pump to operate at very reduced capacity.
4. Gate valve or check valve may be clogged, causing low pump flow.
5. Pump may be air logged.

Circuit breaker trips.

1. Reset breaker by pushing completely down on handle

then back to On position. If breaker trips again in few seconds, it indicates excessive load probably caused by a short in the motor or control box. Check out instructions given with control box before pulling pump.

2. If this condition happens after an electrical storm, motor or control box may be damaged by lightning.
3. Resistance reading of the motor with lead wires disconnected from the control box can determine if trouble is in motor or control box.

Pump is noisy and pump rate is low.

Impeller may be partially clogged with some foreign objects, causing noise and overload on the motor.

Grease and solids have accumulated around pump and will not pump out of basin.

1. Lower control switch may be set too high.
2. Run pump on Hand operation for several minutes with small amount of water running into basin to clean out solids and grease. This allows pump to break suction and surge which will break up the solids. If level switch is set properly, this condition generally will not occur.
3. Trash and grease may have accumulated around floats, causing pump to operate erratically.

Pump Wiring Diagrams

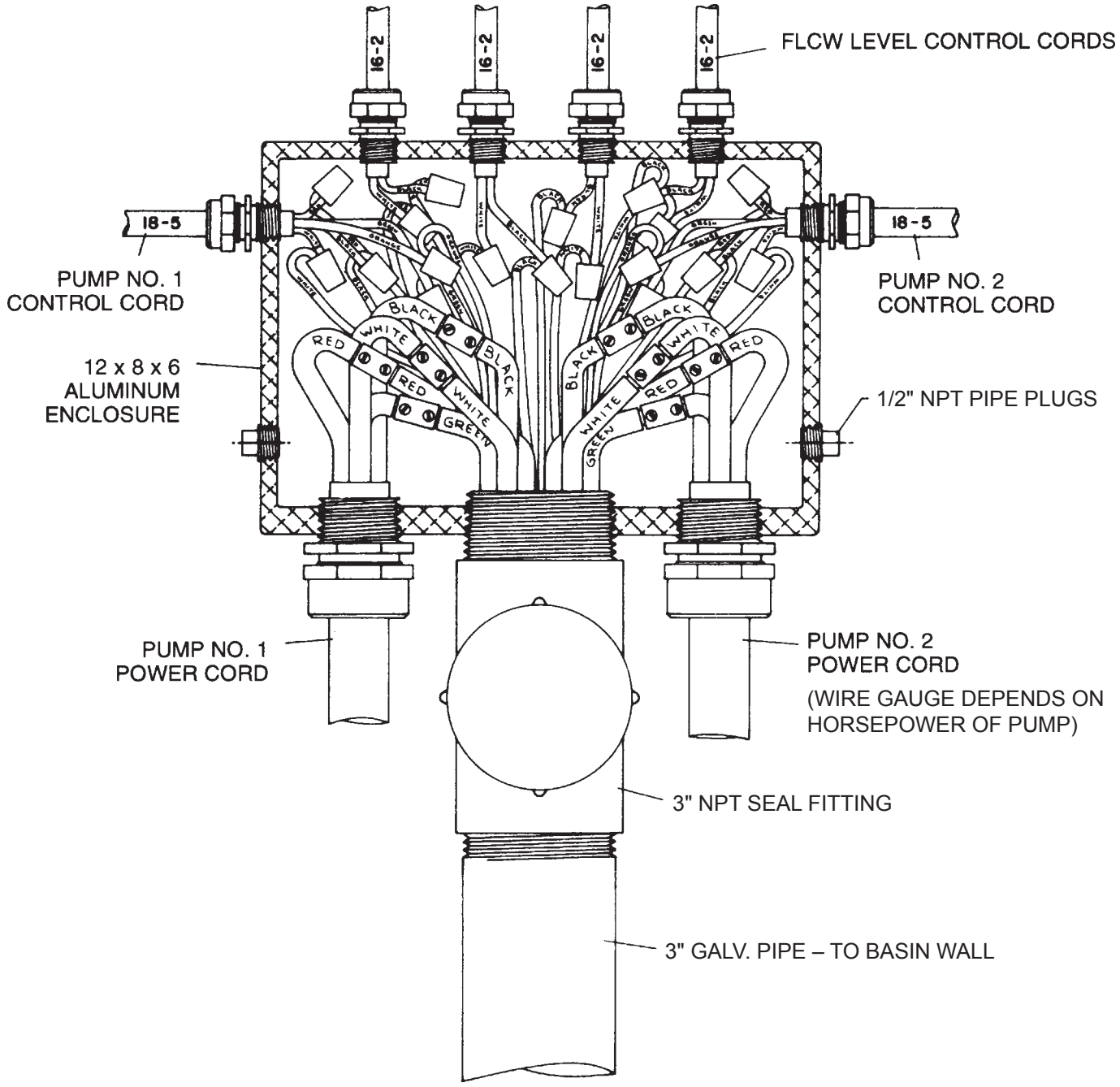

WIRING DIAGRAMS

Pump Wiring Schematic

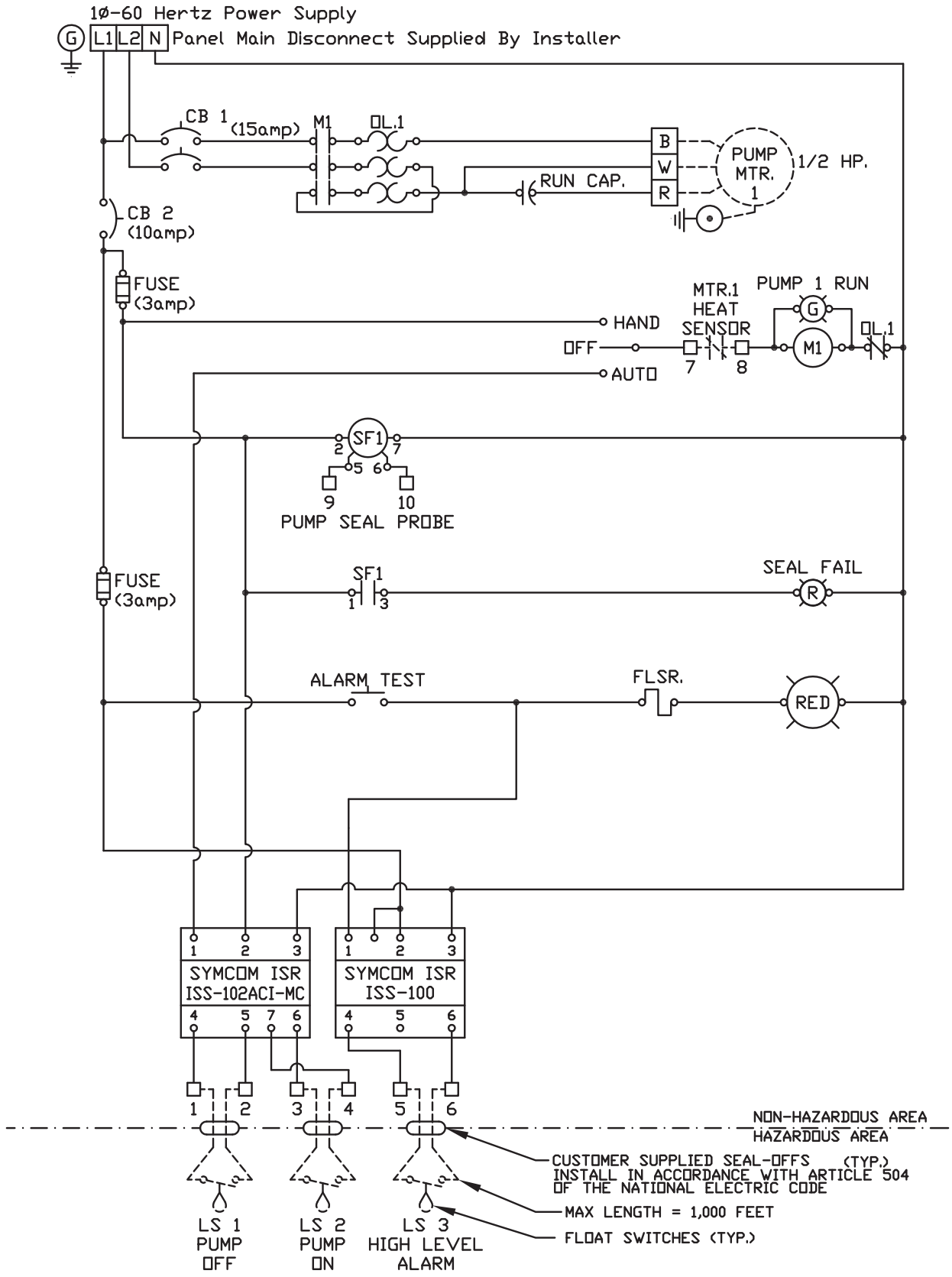

Pump Wiring Schematic

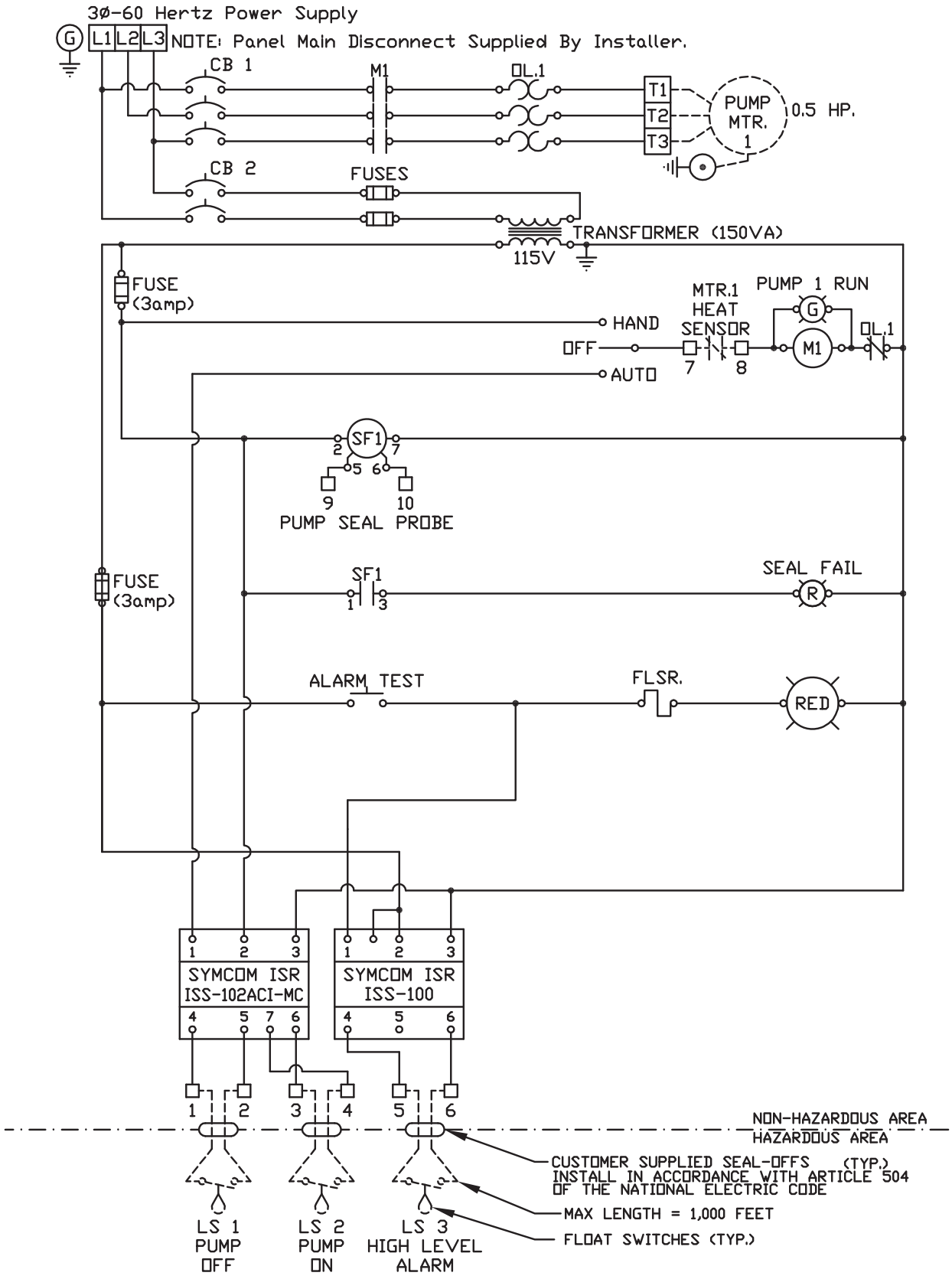

SPX50/SPX50H Dimensional Data

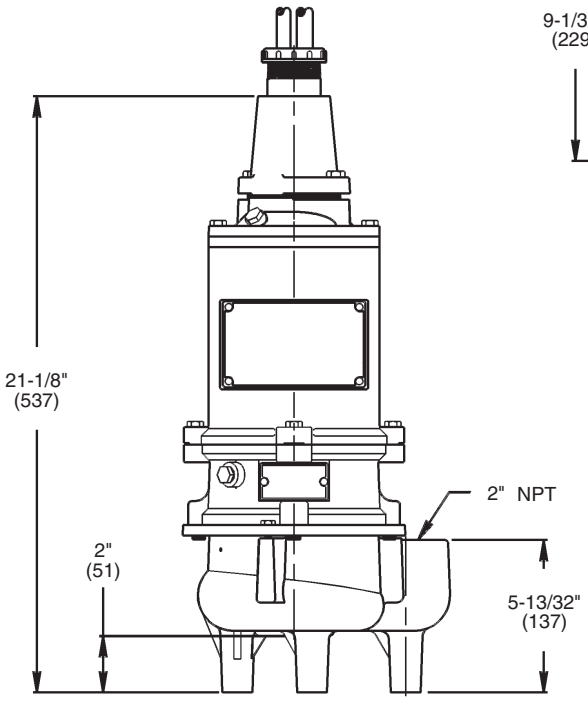

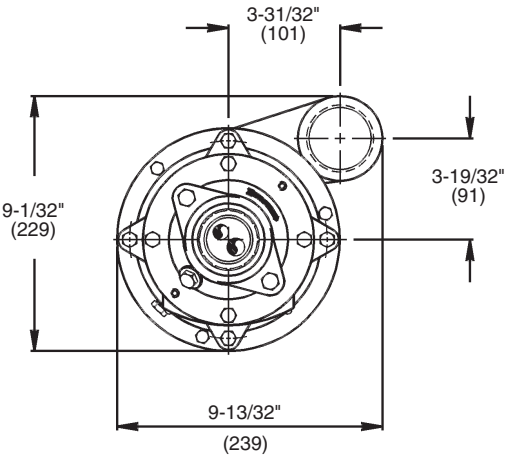

SPX50
(Dimensions in mm)

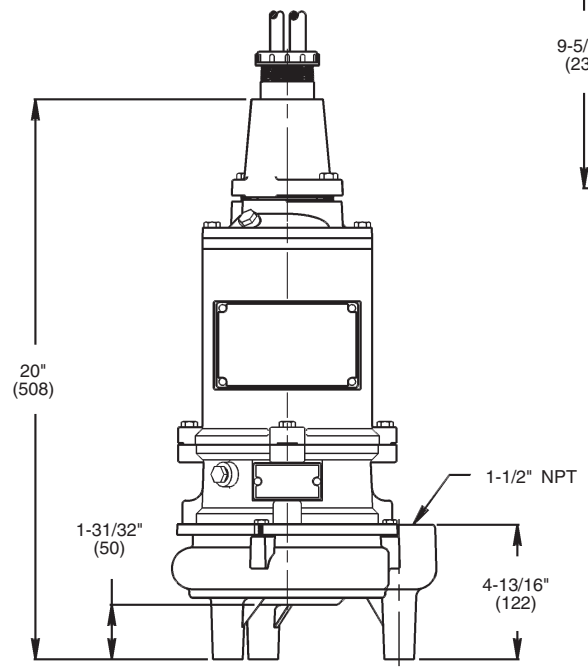

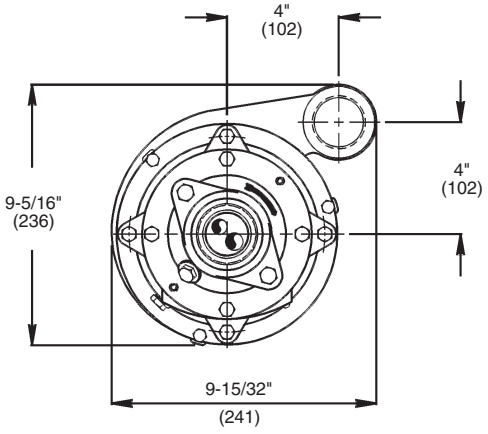

SPX50H
(Dimensions in mm)

SPX50H
Parts List

ORDERING REPLACEMENT PARTS: Product improvements are made from time to time. The latest part design will be furnished as long as it is interchangeable with the old part. When ordering replacement parts, always furnish the following information: (1) serial number, (2) model and size, (3) part description, (4) part number, (5) quantity required, and (6) shipping instructions.

Ref. No.	Part No.	Part Description	Qty.
1	22407C602	Cap, Cord	1
2	10649A102	Tube, Plastic x 1-1/4" Lg.	2
3	19100A012	Screw, Cap 5/16 x 1-1/4" Lg.	8
4	05876A122	O-Ring, 4-1/2" x 4-1/4" x 1/8"	1
5	21570B100X	Cap, Upper Bearing	1
6	05876A123	O-Ring, 4-7/8" x 4-5/8" x 1/8"	1
7	05022A054	Plug, Pipe 1/4" NPT	2
8	05434A034	Screw, Mach. #10 x 1/2" Lg.	1
9	06107A015	Washer, Lock	1
10	07597A017	Screw, Mach. 5/16 x 1" Lg. (SPX50)	2
	07597A017	Screw, Mach. 5/16 x 1" Lg. (SPX50H)	6
11	21571D150K	Housing w/Stator, 1ø	1
	21571D151K	Housing w/Stator, 200V, 3ø	1
	21571D152K	Housing w/Stator, 230/460V, 3ø	1
12	–	Oil, Transformer (1 gal. can)	1.06 gal.
13	19331A005	Washer, Spring	2
14	08565A013	Bearing, Ball (upper)	1
15	11816A006	Ring, Retaining	1
16	26859C101X	Rotor w/Shaft, 1ø	1
	26859C104X	Rotor w/Shaft, 3ø	1
17	0856A018	Bearing, Ball (lower)	1
18	21574D100X	Housing, Upper Seal	1
19	21576A010	Seal, Shaft	2
20	12588A006	Ring, Retaining	1
21	22578A003	Electrode w/Resistor	1
22	05876A125	O-Ring, 6-1/8" x 5-7/8" x 1/8"	2
23	22579A000	Ferrule, Rubber	1
24	21577A000	Plug, Special	1
25	21578C115X	Housing, Lower Seal	1
26	06106A008	Screw, Cap 5/16 x 1" Lg.	4
27	26226D012	Case, Volute	1
28	19099A012	Screw, Cap 1/4 x 1" Lg.	3
29	21663C010	Impeller, Recessed	1
30	19109A070	Nut, Jam	1
31	05013A027	Screw, Set	2

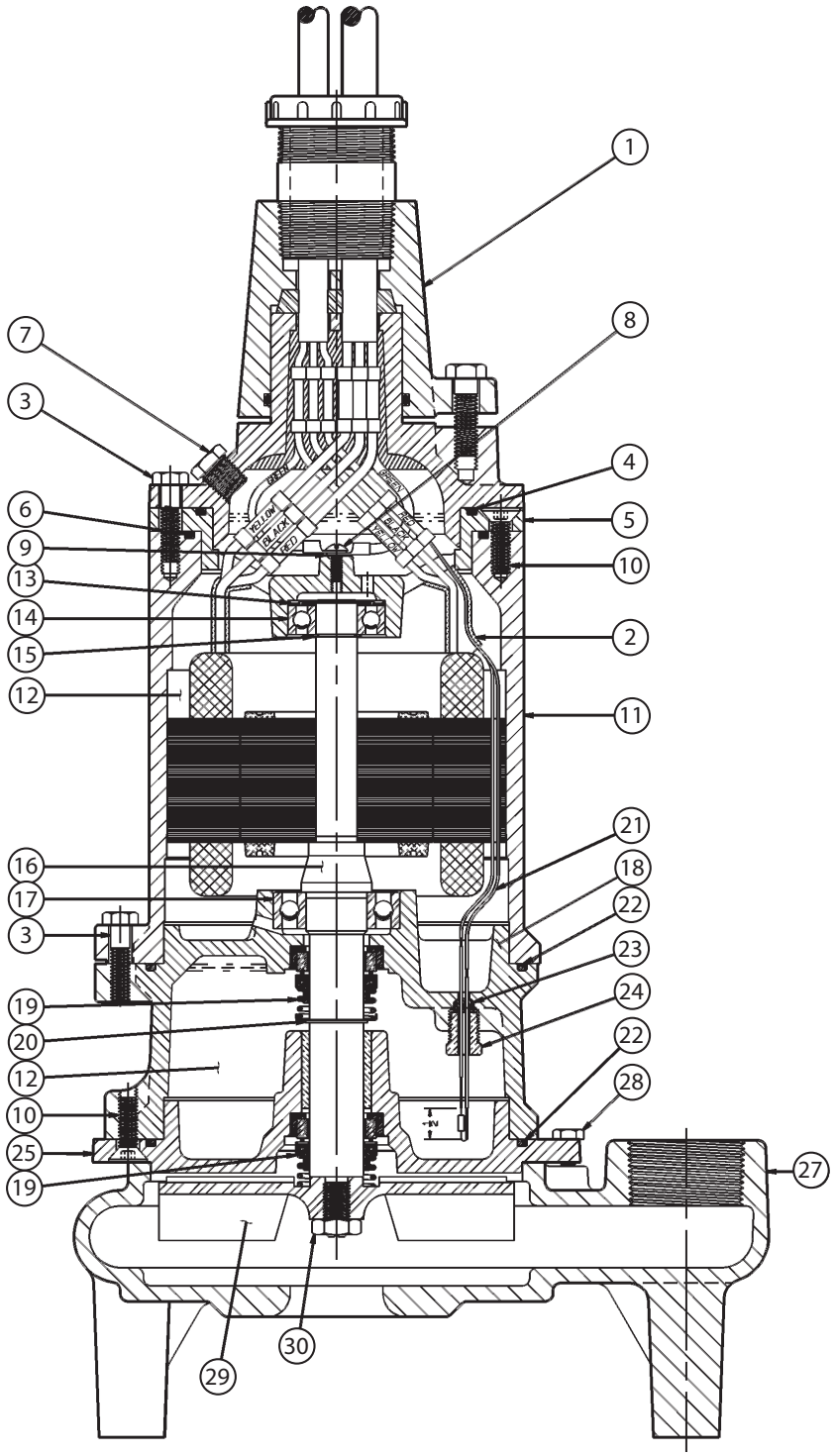

SPX50
Parts List

ORDERING REPLACEMENT PARTS: Product improvements are made from time to time. The latest part design will be furnished as long as it is interchangeable with the old part. When ordering replacement parts, always furnish the following information: (1) serial number, (2) model and size, (3) part description, (4) part number, (5) quantity required, and (6) shipping instructions.

Ref. No.	Part No.	Part Description	Qty.
1	22407C602	Cap, Cord	1
2	10649A102	Tube, Plastic x 1-1/4" Lg.	2
3	19100A012	Screw, Cap 5/16 x 1-1/4" Lg.	8
4	05876A122	O-Ring, 4-1/2" x 4-1/4" x 1/8"	1
5	21570B100X	Cap, Upper Bearing	1
6	05876A123	O-Ring, 4-7/8" x 4-5/8" x 1/8"	1
7	05022A054	Plug, Pipe 1/4" NPT	2
8	05434A034	Screw, Mach. #10 x 1/2" Lg.	1
9	06107A015	Washer, Lock	1
10	07597A017	Screw, Mach. 5/16 x 1" Lg. (SPX50)	2
	07597A017	Screw, Mach. 5/16 x 1" Lg. (SPX50H)	6
11	21571D150K	Housing w/Stator, 1ø	1
	21571D151K	Housing w/Stator, 200V, 3ø	1
	21571D152K	Housing w/Stator, 230/460V, 3ø	1
12	–	Oil, Transformer (1 gal. can)	1.06 gal.
13	19331A005	Washer, Spring	2
14	08565A013	Bearing, Ball (upper)	1
15	11816A006	Ring, Retaining	1
16	26859C101X	Rotor w/Shaft 1ø	1
	26859C104X	Rotor w/Shaft 3ø	1
17	08565A018	Bearing, Ball (lower)	1
18	21574D100X	Housing, Upper Seal	1
19	21576A010	Seal, Shaft	2
20	12588A006	Ring, Retaining	1
21	22578A003	Electrode w/Resistor	1
22	05876A125	O-Ring, 6-1/8" x 5-7/8" x 1/8"	2
23	22579A000	Ferrule, Rubber	1
24	21577A000	Plug, Special	1
25	21578C115X	Housing, Lower Seal	1
26	06106A008	Screw, Cap 5/16 x 1" Lg.	4
27	21612D000	Case, Volute	1
28	19099A012	Screw, Cap 1/4 x 1" Lg.	3
29	21663C020	Impeller, Recessed	1
30	19109A070	Nut, Jam	1
31	05013A027	Screw, Set	2

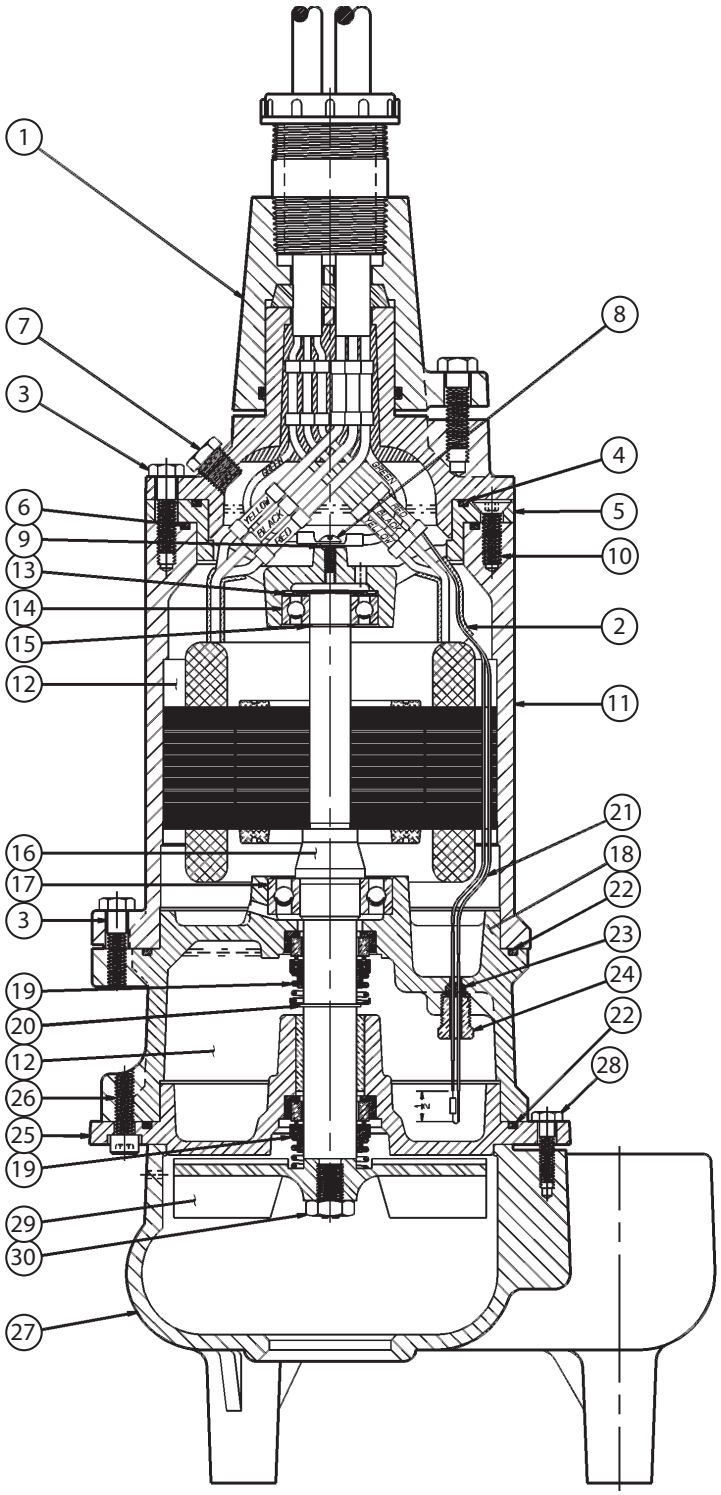

THIS PAGE INTENTIONALLY LEFT BLANK

THIS PAGE INTENTIONALLY LEFT BLANK

STANDARD LIMITED WARRANTY

Pentair Hydromatic® warrants its products against defects in material and workmanship for a period of 12 months from the date of shipment from Pentair Hydromatic or 18 months from the manufacturing date, whichever occurs first – provided that such products are used in compliance with the requirements of the Pentair Hydromatic catalog and technical manuals for use in pumping raw sewage, municipal wastewater or similar, abrasive-free, noncorrosive liquids.

During the warranty period and subject to the conditions set forth, Pentair Hydromatic, at its discretion, will repair or replace to the original user, the parts that prove defective in materials and workmanship. Pentair Hydromatic reserves the right to change or improve its products or any portions thereof without being obligated to provide such a change or improvement for prior sold and/or shipped units.

Start-up reports and electrical schematics may be required to support warranty claims. Submit at the time of start up through the Pentair Hydromatic website: http://forms.pentairliterature.com/startupform/startupform.asp?type=h. Warranty is effective only if Pentair Hydromatic authorized control panels are used. All seal fail and heat sensing devices must be hooked up, functional and monitored or this warranty will be void. Pentair Hydromatic will cover only the lower seal and labor thereof for all dual seal pumps. Under no circumstance will Pentair Hydromatic be responsible for the cost of field labor, travel expenses, rented equipment, removal/reinstallation costs or freight expenses to and from the factory or an authorized Pentair Hydromatic service facility.

This limited warranty will not apply: (a) to defects or malfunctions resulting from failure to properly install, operate or maintain the unit in accordance with the printed instructions provided; (b) to failures resulting from abuse, accident or negligence; (c) to normal maintenance services and parts used in connection with such service; (d) to units that are not installed in accordance with applicable local codes, ordinances and good trade practices; (e) if the unit is moved from its original installation location; (f) if unit is used for purposes other than for what it is designed and manufactured; (g) to any unit that has been repaired or altered by anyone other than Pentair Hydromatic or an authorized Pentair Hydromatic service provider; (h) to any unit that has been repaired using non factory specified/ OEM parts.

Warranty Exclusions: PENTAIR HYDROMATIC MAKES NO EXPRESS OR IMPLIED WARRANTIES THAT EXTEND BEYOND THE DESCRIPTION ON THE FACE HEREOF. PENTAIR HYDROMATIC SPECIFICALLY DISCLAIMS THE IMPLIED WARRANTIES OF MERCHANTABILITY AND FITNESS FOR ANY PARTICULAR PURPOSE.

Liability Limitation: IN NO EVENT SHALL PENTAIR HYDROMATIC BE LIABLE OR RESPONSIBLE FOR CONSEQUENTIAL, INCIDENTAL OR SPECIAL DAMAGES RESULTING FROM OR RELATED IN ANY MANNER TO ANY PENTAIR HYDROMATIC PRODUCT OR PARTS THEREOF. PERSONAL INJURY AND/OR PROPERTY DAMAGE MAY RESULT FROM IMPROPER INSTALLATION. PENTAIR HYDROMATIC DISCLAIMS ALL LIABILITY, INCLUDING LIABILITY UNDER THIS WARRANTY, FOR IMPROPER INSTALLATION. PENTAIR HYDROMATIC RECOMMENDS INSTALLATION BY PROFESSIONALS.

Some states do not permit some or all of the above warranty limitations or the exclusion or limitation of incidental or consequential damages and therefore such limitations may not apply to you. No warranties or representations at any time made by any representatives of Pentair Hydromatic shall vary or expand the provision hereof.

PENTAIR

HYDROMATIC®

740 EAST 9TH STREET
ASHLAND, OHIO, USA 44805
419-289-1144

490 PINEBUSH ROAD, UNIT #4
CAMBRIDGE, ONTARIO, CANADA N1T 0A5
800-363-PUMP

WWW.HYDROMATIC.COM

Warranty Rev. 12/13

PENTAIR

HYDROMATIC®

INSTALLATION AND
OPERATOR'S MANUAL

SK60 Submersible Sewage Ejector Pump

INSTALLATION ET MANUEL DE
L'OPÉRATEUR

Pompe submersible d'eaux d'egout SK60

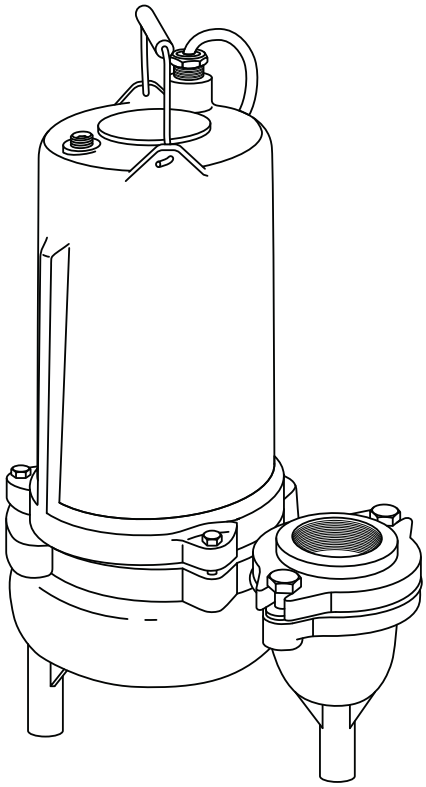

Installation/Operation/Parts
For further operating, installation, or maintenance assistance:

Call 1-888-957-8677
English .....Pages 2-10

Installation/Fonctionnement/Pièces
Pour plus de renseignements concernant l'utilisation, l'installation ou l'entretien,

Composer le 1 (888) 957-8677
Français .....Pages 11-20

293 WRIGHT STREET, DELAVAN, WI 53115 WWW.HYDROMATIC.COM
PH: 888-957-8677

269 TRILLIUM DRIVE, KITCHENER, ONTARIO, CANADA N2G 4W5
PH: 519-896-2163

© 2013 Pentair, Ltd. All Rights Reserved.

W-03-094 (Rev. 03/04/13)

Contents

Important Safety Instructions 2
Installation 3
Operation 4
Maintenance 4
Replacing diaphragm switch 4
Checking motor stator 5
Ground check 5
Oil fill . . . . . .
Troubleshooting 7
Repair Parts 8
Warranty 9
Product Specifications 10

Important Safety Instructions

SAVE THESE INSTRUCTIONS - This manual contains important instructions that should be followed during installation, operation, and maintenance of the product. Save this manual for future reference.

⚠ This is the safety alert symbol. When you see this symbol on your pump or in this manual, look for one of the following signal words and be alert to the potential for personal injury!

⚠ DANGER indicates a hazard which, if not avoided, *will* result in death or serious injury.

⚠ WARNING indicates a hazard which, if not avoided, *could* result in death or serious injury.

⚠ CAUTION indicates a hazard which, if not avoided, *could* result in minor or moderate injury.

NOTICE addresses practices not related to personal injury.

The manufacturer cannot anticipate every possible circumstance that might involve a hazard. The warnings in this manual, and the tags and decals affixed to the unit are, therefore, not all-inclusive. If you use a procedure or operating technique that the manufacturer does not specifically recommend, you must satisfy yourself that it is safe for you and others. You must also make sure that the procedure or operating technique that you choose does not render the system unsafe.

Electrically powered sewage pumps normally give many years of trouble-free service when correctly installed, maintained, and used. However, unusual circumstances (interruption of power to the pump, large solids in the sump, flooding that exceeds the pump's capacity, electrical or mechanical failure in the pump, etc.) may prevent your pump from functioning normally. To prevent possible damage, consult your dealer about installing a secondary sewage pump or a high water alarm. See *Troubleshooting* in this manual for information about common sewage pump problems and remedies. For more information, see your retailer, call HYDROMATIC® customer service at 1-888-957-8677 or visit our web site at hydromatic.com.

⚠ WARNING Hazardous voltage - risk of electrical shock. Shock can cause serious injury or death. Failure to follow the warnings below can result in fatal electric shock.

⚠ WARNING Burn Hazard. Motors can operate at high temperatures. Do not touch an operating motor. To do so can cause personal injury.

⚠ CAUTION Risk of flooding. If a flexible discharge hose is used, pump may move around in sump when motor starts. If it moves far enough so that the switch hits the side of sump, the switch may stick and prevent the pump from starting. Make sure the pump is secured so it cannot move around in the sump.

⚠ WARNING Hazardous pressure and gas - risk of explosion and personal injury. Failure to follow the warnings that follow can result in personal injury.

1. If your basement has water or moisture on the floor, do not walk on the wet area until all the power has been turned off. If the shut-off box is in the basement, call the electric company or the hydro authority to shut off the service to the house, or call your local fire department for instructions. Do not handle the pump or pump motor with wet hands or when standing on wet or damp surfaces.2. Connect only to a properly grounded receptacle.
3. All wiring should be performed by a qualified electrician.
4. Protect the electrical cord from sharp objects, hot surfaces, oils, and chemicals. Observe the *Cord Lift Warning* shown below.

5. **Risk of explosion and hazardous gas.** Septic tank must be vented in accordance with local plumbing codes.
   Do not smoke or use sparkable electrical devices or flame in a septic (gaseous) or possible septic sump.
   If a septic sump condition exists and if entry into sump is necessary, then (1) provide proper safety precautions per OSHA requirements and (2) do not enter sump until these precautions are strictly adhered to.
   Do not install pump in location classified as hazardous per N.E.C., ANSI/NFPA 70- 2001.
6. Know the pump application, limitations and potential hazards.
7. Wear safety glasses at all times when working with the pump.
8. Keep the work area clean, uncluttered and properly lighted - secure all unused tools and equipment.
9. Keep visitors at a safe distance from working area.
10. Make the workshop child-proof - with padlocks, master switches, and by removing starter keys.
11. Release all pressure within the system before servicing any component.
12. Provide a means of pressure relief for pumps whose discharge line can be shut-off or obstructed.
13. Periodically inspect the pump and system components. Perform routine maintenance as required.
14. Drain all the liquid from the system before servicing.

California Proposition 65 Warning

⚠WARNING This product and related accessories contain chemicals known to the State of California to cause cancer, birth defects or other reproductive harm.

Installation

Thank you for purchasing this HYDROMATIC® pump. To help ensure years of trouble-free operation, please read the manual carefully.

Before installation, check your local electrical and plumbing codes. A typical sewage pump installation is shown below.

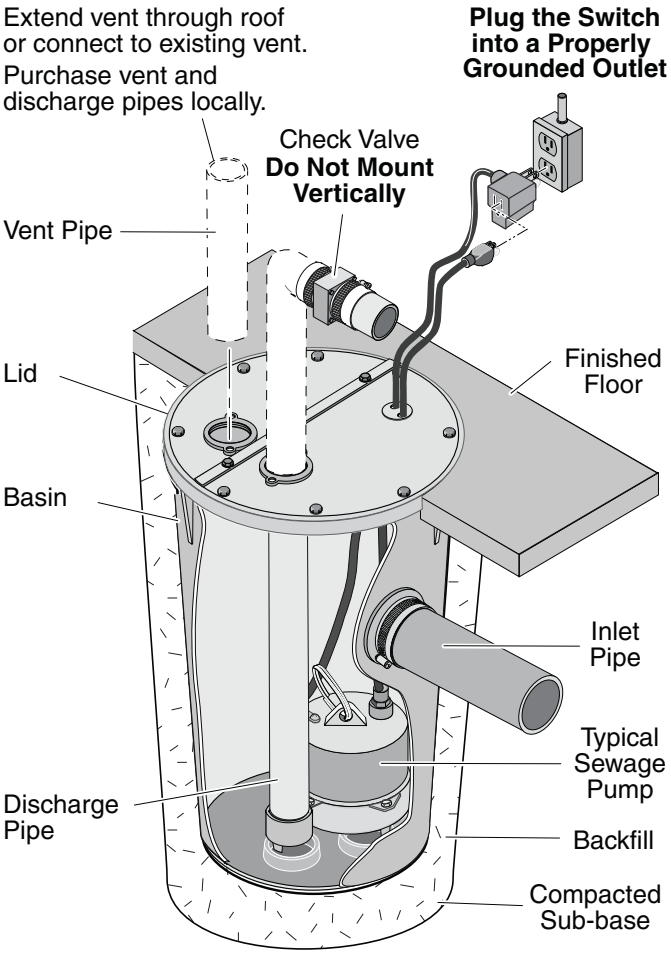

Cord Lift Warning

⚠WARNING



Risk of electrical shock.
Can burn or kill.
Do not lift pump by power cord.

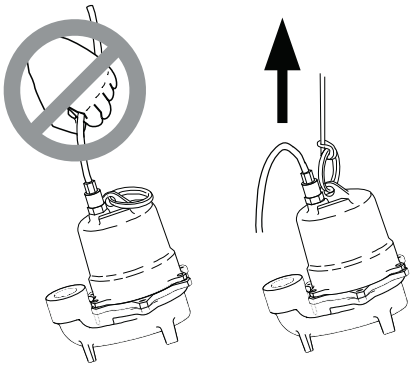

Risk of electrical shock and fire.

1. Attempting to lift or support the pump by the power cord can damage cord and cord connections, expose bare wires, and cause a fire or electrical shock.
2. Use handle on top of pump for all lifting or lowering of pump. Disconnect the power to the pump before doing any work on it or attempting to remove it from the pit.
3. Lifting or supporting the pump by the power cord will void the warranty.

Follow these guidelines for installation:

1. Provide properly sized sump (see *Specifications*).
2. Do not set pump directly on the bottom of sump pit if it is not solid. Raise the pump by using bricks or concrete blocks underneath it.
3. Make sure sump is free of string, cloth, nails, gravel, etc. before installing pump.
4. Do not remove ground pin from electrical plug.
5. Do not use an extension cord to operate this pump.
6. For proper automatic operation, make sure the pump power cord is plugged into the piggyback receptacle on the switch cord. Three phase models must be properly connected to a suitable control panel.

   Do not cut, crimp, or bend single phase switch power cord (**15**). The vent tube needs to "breathe" for proper operation of switch. This may cause pump failure and void warranty.
7. Use steel or plastic pipe for all connecting lines between pump and sewer outlet.

   NOTICE: Some city regulations do not allow installing a pump with plastic pipe. Check local regulations.
8. Use PTFE pipe thread sealant tape on pipe connections. Do not use ordinary pipe joint compound on plastic pipe or pump. Pipe joint compound can attack plastics and damage pump.
9. In applications where the pump may sit idle for months at a time, it is recommended that the pump(s) be cycled every month to ensure the pumping system is working properly when needed.
10. A check valve should be installed horizontally in discharge pipe.
11. The optional Hydromatic Q Alert is an audible alarm system for high water conditions. It should be installed in every sump for greater protection.

    NOTICE: Q Alert is for indoor use only. Other Q Alarm and control panels are available for outdoor use. Contact your HYDROMATIC distributor for applications.
12. Use pump partially or completely submerged for pumping waterlike liquids. The pump will pump solid materials up to 2″ (spherical) in diameter.

    ⚠ CAUTION **Risk of fire.** Do not pump flammable liquids. Strong chemicals or salt water should not be pumped without consulting your HYDROMATIC distributor for proper seals and coatings.

Operation

NOTICE: Do not allow pump to run in a dry sump. Doing so will void the warranty and may damage the pump.

An automatic overload protector in the motor will protect the motor from burning out due to overheating/ overloading. When the motor cools down, the overload protector will automatically reset.

If overload trips frequently, check for the cause. It could be a stuck impeller, wrong/low voltage, or electrical failure in motor. If an electrical failure in the motor is suspected, have it serviced by a competent repairman.

Maintenance

Read the following instructions carefully before replacing any parts. Reasonable care and safe methods should be practiced. Check local codes and requirements before installation. Only a competent plumber/electrician should make the installations.

Submerge pump in a disinfectant solution (dilute chlorine bleach) for at least one hour before disassembling pump.

Check for an obstruction in the impeller by looking through the suction hole of the pump. The shaft should turn freely if unobstructed. Keep fingers, clothing or any material from suction inlet.

The steps described in this section should be performed only by an authorized service center.

NOTICE: Read all directions before replacing any parts. Remove pump and switch from power source before servicing.

The numbers in parentheses, such as "(**3**)" or "(**16**)", refer to item numbers used on the *Repair Parts* diagram.

Replacing diaphragm switch

From switch housing (**15**) remove screw (**14**) from housing. Replace with new switch. Insert screw (**14**) into housing (**15**) and tighten. Plug pump power cord into the piggyback receptacle on the switch cord, and then switch plug into correct power source.

Checking motor operation

Plug power cord directly in power source to check motor operation. Motor should start and run smoothly. If motor does not start, pump must be dismantled and motor checked. Be certain to unplug cord before disconnecting any wires.

Checking motor stator

Remove plug (**21**) from top of housing (**19**) and pour oil into a clean glass container. There are approximately two quarts of oil in the motor housing. If oil is clear, it will indicate motor is not burned and there has been no water leak into the motor. If oil is black, it will indicate a burned stator. If oil is cloudy, it will indicate water in motor oil, so all seals should be replaced.

Remove bolts (**17**) to separate volute case (**12**) from motor housing. Remove O-ring (**18**) and seal plate (**11**) from motor housing. Remove bolts to separate motor-stator from rotor. If stator is visibly burned, it must be replaced. If stator is not burned but the oil shows signs of water, stator can be checked with the ohmmeter to see if it can be used.

Ground check

Set ohmmeter scale to R X 1 scale and check meter by putting both meter leads together and adjusting the needle knob until meter reads zero. If meter cannot be adjusted to zero, the batteries in meter must be replaced.

NOTICE: Always reset meter to zero [0] when going to a new scale before making any measurements.

If wire is OK, meter needle will go to near zero and stay there. If meter needle does not move, the wire has an open and the wire must be repaired or replaced.

Connect one meter lead to one blade terminal of stator and touch other meter lead to motor stator housing (**4**). If the resistance to the ground is less than 500,000 ohms, stator must be dried out before retesting. To dry out, place pump in 220 degree oven for four hours. Recheck after motor cools.

If motor is thoroughly dry, needle of ohmmeter will not move on the ground check. This indicates a reading of 50 megohms or higher. When making the ground check, if the needle goes to zero, the motor has a wire touching the stator shell at some place and the stator will have to be replaced.

NOTICE: If motor shows a satisfactory ground check then the winding resistance must be checked.

Winding resistance test

Use ohmmeter with scale set to R X 1 scale. On this scale, meter reads directly in ohms. Recheck to zero [0] before making a reading on the winding.

NOTICE: If water is found in motor, seal should be replaced.

Replacing seal

Hold rotor. On 3 phase motors only, remove the impeller screw and impeller washer. Unscrew impeller (**13**). Tap on end of shaft with plastic or rubber hammer. This will push the rotating seal (**10**) from shaft and also push lower bearing from seal plate. Clean seal plate (**11**) and motor housing (**19**) thoroughly. All sand and dirt must be removed. Remove stationary ceramic seat of seal (**10**) from seal plate. Push new ceramic seat into seal plate. Use O-ring Lube on rubber ring. Replace rotor in seal plate (**11**). Use care in putting shaft through ceramic seat to be sure it is not chipped. Inspect seal after shaft is in place. If seal has been chipped it must be replaced. Do not replace rotating part of seal until the balance of the pump is assembled.

Bearings

When the pump rotor has been removed, check bearings before replacing. If bearings are rusted or rough when turned, they should be replaced. When installing a replacement bearing, press only on the inner face. If a press is not available, bearings can be tapped on, using a sleeve that bears only on the inner face.

NOTICE: Never pound on the outer face of the bearing as this will cause bearing damage.

Reassembly

1. Push the new rotor shaft and ball bearing assembly into the seal plate. (Note that the replacement rotor must be of the same manufacture as the existing stator, or vice versa.) Reassemble the motor (**4**) to the seal plate (**11**) with the four long cap screws. Be sure to tighten down the bolts evenly and firmly to prevent cocking of the stator. An uneven assembly can cause the rotor to rub the motor causing the motor to short.
2. Press the new ceramic seal (**10**) in place with the rubber ring facing the impeller. This should have a thin oil (dielectric, same as in motor housing) coating.

   NOTICE: Ceramic must be kept clean. Any dirt will cause seal failure.
3. Start the impeller (**13**) on the shaft one to two turns; then, add a drop of [2]Loctite® #243 to the impeller threads and screw the impeller hand tight. The impeller will force the ceramic seal into position. The shaft should be free of dirt, grease, etc., or the Loctite® will not hold as designed. Replace impeller washer and impeller screw to the shaft on three phase models.

[2] Henkel Corporation, Germany

   NOTICE: Loctite® overrun onto the seal or bearing will result in shaft seizure.

4. Remove the old seal ring (**18**) and stretch on new ring with O-ring lube.

   Do not roll the ring onto seal plate or water leakage into the motor housing will result.

5. Fasten the ground wire inside the motor housing and tuck wires up into the housing to prevent rubbing on the rotor; then assemble housing (**19**) to volute (**12**) with bolts (**17**).

6. Before filling the motor housing with oil, a seal leak test should be performed. Apply 7 to 8 pounds of air pressure in the 1/4" NPT tap (**21**) on the top of the motor cover and seal chamber.

   NOTICE Too much pressure will damage the seal. Seal would have to be replaced.

   Then submerge the pump in water and check for leaks. If a leak occurs, isolate where it is coming from and correct the problem by replacing the failed part.

   HYDROMATIC pumps have a small air vent hole in the impeller cavity to let out trapped air. If this hole becomes plugged, pump may air lock. To break the air lock, use a small screwdriver to clear hole in the impeller cavity.

   As a secondary precaution in installations of this type, an 1/8" hole should be drilled in the discharge pipe just above the volute. The check valve should be at least 12 inches above pump discharge and mounted horizontally. Do not put check valve directly into pump discharge opening.

   NOTICE: In sumps where the pump is operating daily, air locking rarely occurs.

Oil fill

1. After seal leak test is satisfactory, remove unit from water and wipe or blow off any excess water.
2. Do not put oil in motor with any water present in motor cavity.
3. Use refined paraffinic transformer oil, [3]Shellflex™ 2210 or equivalent.

[3] Shell Oil Company, Texas

4. Slowly fill oil to 1/8" over windings in motor housing through opening (**21**). Use an oil fill tube that will go into holes so that air can escape. Replace plug (**21**).

   NOTICE Do not fill the motor housing completely – allow air space for expansion.

5. Connect power cord wires to terminals in panel, or connect power source, and check pump running. Motor should run smoothly and be free of vibration. Pump is ready for operation.

Troubleshooting 7

⚠WARNING Hazardous voltage. Can shock, burn, or kill. Disconnect power before attempting any service or repair work on pump.

⚠WARNING Hazardous impellers and unexpected starts which can cause loss of fingers. Keep hands away from pump suction inlet when working on or servicing pump.

Symptom	Possible Cause(s)	Corrective Action
Motor not running	Motor protector tripped.	Allow motor to cool. Make sure pump is completely submerged. Clear debris from volute and impeller. Check for high amp draw.
	Open circuit breaker or blown fuse.	Replace fuse or reset breaker. If circuit breaker opens repeatedly, don't reset it - call a licensed electrician.
	Impeller clogged or binding.	Check amp draw. If it is more than twice the nameplate amps, the impeller is locked. Bearings and shaft may be damaged. DISCONNECT POWER, clear debris from volute, impeller, and cutter as needed.
	Power cable damaged.	Resistance between power cable and ground should be infinity. If any reading is less than infinity, call a licensed electrician.
	Bad control panel.	Inspect control panel wiring. Call a licensed electrician.
	Defective liquid level switch.	With switch disconnected from power, check continuity through switch while activating liquid level switch. Replace switch if necessary.
	Not enough liquid in wet well to activate controls.	Allow the liquid to rise several inches above the switch-on level.
	Liquid level cords tangled	Untangle cords for free operation.
	Automatic controls defective	Try running pump in manual mode. If it runs, the automatic control is at fault.
Pump runs continuously	Liquid level control cords tangled	Untangle cords for free operation.
	Pump is airlocked.	Stop pump for about one minute, then restart. Repeat stopping and starting until the airlock clears. If the airlock persists, DISCONNECT POWER, pull the pump and drill a 1/8" hole in the discharge pipe between the pump discharge and the check valve.
	Flow in matches or exceeds the pump's capacity.	A larger pump or more pumps may be needed.
Little or no effluent delivered from pump	Check valve plugged, stuck shut, or installed backwards.	Make sure check valve is installed correctly (flow arrow should point away from pump) and functioning correctly.
	System head excessive.	Consult dealer.
	Pump suction plugged.	DISCONNECT POWER, pull pump, inspect, and clear as needed.
	Wrong voltage or not wired correctly.	Check pump's rotation; check nameplate voltage against supply voltage (they must match); consult a licensed electrician.
	Pump is air locked.	Stop pump for about one minute, then restart. Repeat stopping and starting until the airlock clears. If the airlock persists, DISCONNECT POWER, pull the pump and drill a 1/8" hole in the discharge pipe between the pump discharge and the check valve.
	Worn or damaged impeller.	DISCONNECT POWER, pull pump and inspect impeller. Replace if necessary.
	Liquid level controls incorrectly installed or defective.	Reposition or replace as necessary.
Pump cycles constantly	No discharge check valve installed.	Install discharge check valve.
	Discharge check valve stuck open.	Repair or replace check valve as necessary.
	Sewage wetwell too small.	Consult dealer.
	Liquid level controls incorrectly installed or defective.	Reposition or replace as necessary.
	Pump too small for inlet flow.	Consult dealer about larger pump or second pump.

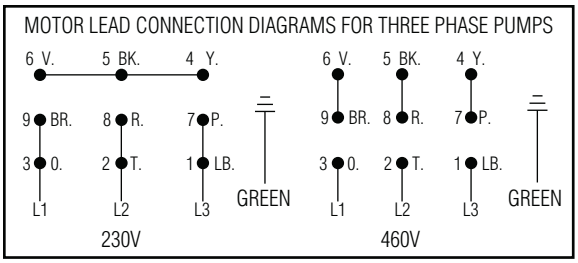

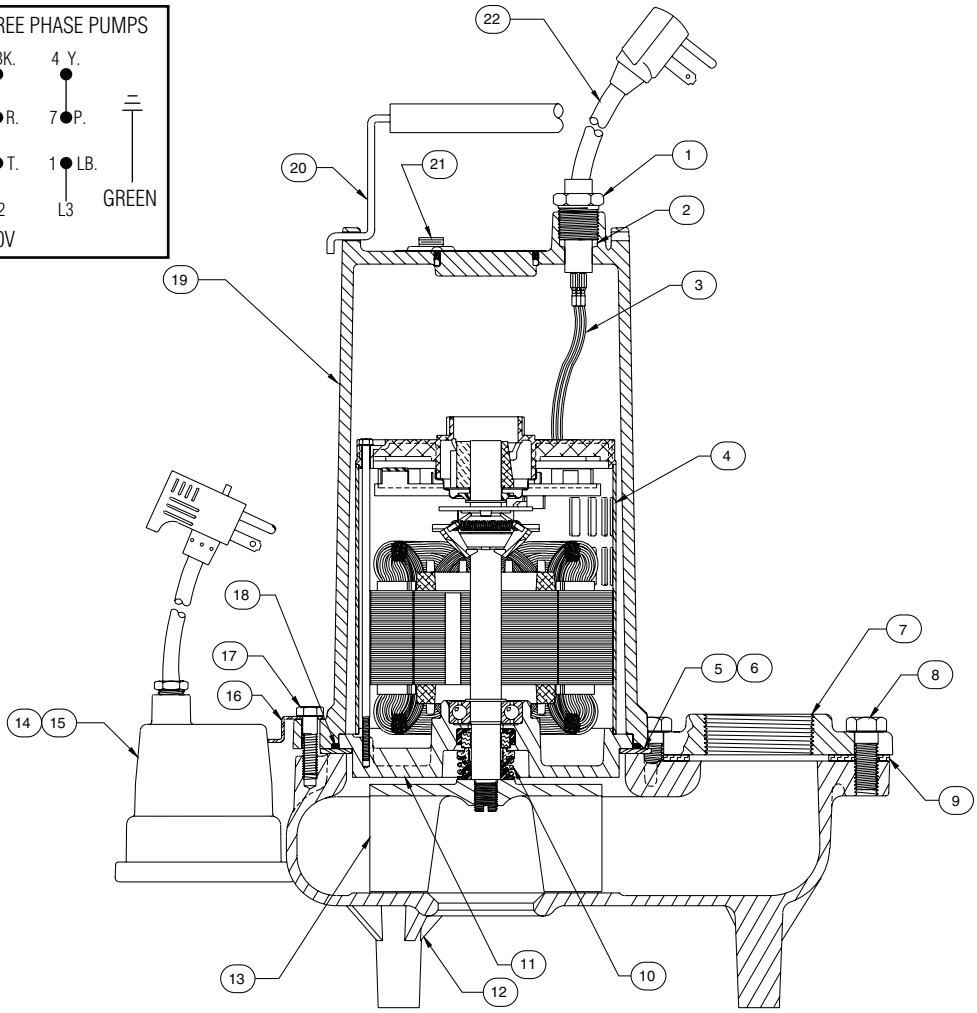

Ref.	Description	Qty.	Part Number
1	Cord Nut (All 1Ø)	1	000750051
2	Ring Seal (All 1Ø)	1	001390141
3	Wire Terminal (All 1Ø)	1	060000821
	Wire Terminal (All 1Ø)	2	060000811
	Wire Connector (All 3Ø)	4	000730011
4	Motor 115/1/60	1	133711001
	Motor 230/1/60	1	133721001
	Motor 200/1/60	1	133731001
	Motor 200/3/60	1	108343001
	Motor 230-460/3/60	1	108341001
	Motor 380/3/60	1	108342001
	Motor 575/3/60	1	108787001
5	Clamp Ring	1	056770003
6	Flathead Screw	3	009840011
7	Discharge Flange 2″ (STD)	1	002080002
	Discharge Flange 3″ (OPT)	1	002070002
8	Capscrew (2″ Discharge)	2	19103A052
	Capscrew (3″ Discharge)	2	19103A043
9	Gasket	1	003240011

Ref.	Description	Qty.	Part Number
10	Shaft Seal	1	014525A010
11	Seal Plate	1	068460002
12	Volute	1	068180002
13	Impeller	1	047810002
14	Screw	1	000300211
15	Diaphragm Switch 115V-20′ (STD)	1	149740225
	Diaphragm Switch 230V-20′ (STD)	1	149740235
16	Switch Bracket	1	055020051
17	Capscrew	3	001010101
18	O-Ring	1	000770031
19	Motor Housing	1	000565002
20	Handle	1	000600005
21	Pipe Plug	1	149810011
22	Power Cord 16/3 115V/1/60 -20′	1	146230201
	Power Cord 16/3 200-230V/1/60 -20′	1	146232201
	Power Cord Ass′y 3E - 20′	1	116440895

Limited Warranty

HYDROMATIC warrants to the original consumer purchaser ("Purchaser" or "You") of HYDROMATIC Sump Pumps, Effluent Pumps, Sewage Pumps (other than 2-1/2"), and Package Systems, that they will be free from defects in material and workmanship for the Warranty Period of 36 months from date of manufacture.

Our warranty will not apply to any product that, in our sole judgement, has been subject to negligence, misapplication, improper installation, or improper maintenance. Without limiting the foregoing, operating a three phase motor with single phase power through a phase converter will void the warranty. Note also that three phase motors must be protected by three-leg, ambient compensated, extra-quick trip overload relays of the recommended size or the warranty is void.

Your only remedy, and HYDROMATIC's only duty, is that HYDROMATIC repair or replace defective products (at HYDROMATIC's choice). You must pay all labor and shipping charges associated with this warranty and must request warranty service through the installing dealer as soon as a problem is discovered. No request for service will be accepted if received after the Warranty Period has expired. This warranty is not transferable.

EXCEPTIONS: Hydromatic Special Application Pumps, Battery Back-Up Sump Pumps, Filtered Effluent Pumps, Grinder Pumps, and 2-1/2" Sewage Pumps are warranted for a period of 12 months from date of purchase or 18 months from date of manufacture, whichever comes first.

HYDROMATIC SHALL NOT BE LIABLE FOR ANY CONSEQUENTIAL, INCIDENTAL, OR CONTINGENT DAMAGES WHATSOEVER.

THE FOREGOING LIMITED WARRANTIES ARE EXCLUSIVE AND IN LIEU OF ALL OTHER EXPRESS AND IMPLIED WARRANTIES, INCLUDING BUT NOT LIMITED TO IMPLIED WARRANTIES OF MERCHANTABILITY AND FITNESS FOR A PARTICULAR PURPOSE. THE FOREGOING LIMITED WARRANTIES SHALL NOT EXTEND BEYOND THE DURATION PROVIDED HEREIN.

Some states do not allow the exclusion or limitation of incidental or consequential damages or limitations on the duration of an implied warranty, so the above limitations or exclusions may not apply to You. This warranty gives You specific legal rights and You may also have other rights which vary from state to state.

This Limited Warranty is effective June 1, 2011 and replaces all undated warranties and warranties dated before June 1, 2011.

HYDROMATIC
293 Wright Street, Delavan, WI 53115
Phone: 888-957-8677 • Fax: 800-426-9446 • Web Site: hydromatic.com

Product Specifications

Model Family	SK60
Typical Application:	Sewage, dewatering
Capacities:	up to 130 GPM (8.2 LPS)
Heads:	up to 28 ft (8.5 m)
Electrical:	115V, 1ø, 12.0 FLA, 60Hz; 208V, 1ø, 6.9 FLA, 60Hz; 230V, 1ø, 6.0 FLA, 60Hz; 208V, 3ø, 2.9 FLA, 60Hz; 230V, 3ø, 2.5 FLA, 60Hz; 460V, 3ø, 1.3 FLA, 60Hz; 575V, 3ø, 1.04 FLA, 60Hz
Motor:	(single phase) - 6/10 HP split phase with thermal overload protection, 1750 RPM; (three phase) - 6/10 HP polyphase, 1750 RPM
Intermittent Liquid Temperature:	140°F (60°C)
Minimum Recommended Sump Diameter:	Simplex = 24" (609.6 mm); Duplex = 36" (914.4 mm)
Automatic Operation:	Diaphragm pressure switch (single phase only, manual available)
Materials of Construction:	Class 30 cast iron
Impeller:	Class 30 cast iron two-vane nonclog
Discharge Size:	2″ NPT (50.8 mm); 3" NPT (76.2 mm) optional
Solids Handling:	2″ (50.8 mm)
Power Cord:	1ø, 115V - 10', STW-A (20' optional); other 1ø and all 3ø - 20', STW-A

Performance Curve

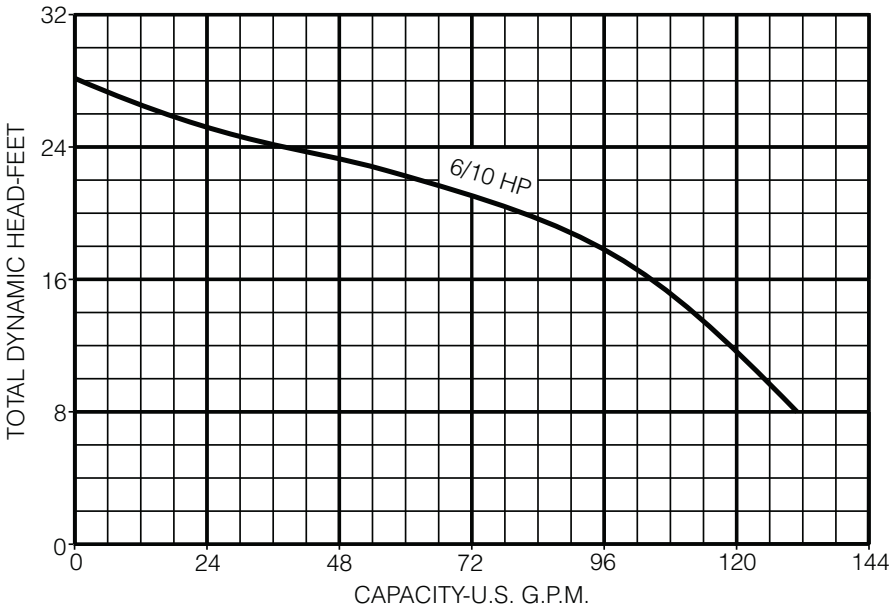

VOLUME
2 OF 3

MECHANICAL

OPERATION & MAINTENANCE
MANUAL

WASTE WATER TREATMENT

IQALUIT
NUNAVUT

2018/2019

VOLUME
2 OF 3

MECHANICAL

OPERATION &
MAINTENANCE
MANUAL

WASTE WATER
TREATMENT
UPGRADE

IQALUIT
NUNAVUT

2018/2019

PREPARED BY

Mecanique Nordique
Inc

INDEX
VOLUME 2

17 = AD-017 PLUMBING FIXTURES

18 = AD-018 AIR HANDLING UNIT

19 = AD-019 BASEBOARDS , CABINETS & UNITS HEATER

20 = AD-020 PLUMBING SPECIALTIES

21 = AD-021 FIRE STOPING

22 = AD-022 PLUMBING VALVES

23 = AD-023 HEATING VALVES

24 = AD-024 HYDRONIC SPECIALTIES

25 = AD-025 THERMOMETERS & PRESSURE GAUGES

26 = AD-026 LAVATORY

27 = AD-027 THERMAL INSULATION

28 = AD-028 SUCTION GUIDE & COMBINATION VALVES

29 = AD-029 CONTROLS WIRING , CONDUITS & BOXS

30 = AD-030 GRUVLOCK FITTINGS & COUPLINGS

31 = AD-031 DUCTS SEALANT

32 = AD-032 PIPE HANGERS

33 = AD-033 SEISMIC RESTRAIN

34 = AD-034 GLYCOL

35 = AD-035 THERM-X-TROLL

36 = AIR FILTER

17

Mécanique Nordique
Plumbing
Heating
Ventillation
mecanique.nordique@hotmail.com
1255 Rue J.A.Bombardier Lévis QC G7A 2P4
Tél : (418) 496-1109 Fax : (418) 496-3803

REVIEWED BY CONTRACTOR
Kudlik Construction Ltd.
NAME: Sandra Rousseau P.Eng
DATE: Jun 26, 2018

IQUALUIT WWTP UPGRADES

DRAWING FOR APPROVAL

ENGINEER: **NUNAMI STANTEC LIMITED**

This shop drawing review stamp applies to the following shop drawings:
EW-1: Haws Model 7501 Eyewash
FD-1: Zurn ZN-211-B floor drain
FD-3: Zurn Z546 floor drain
HB-2: Charland Thermojet NL-533-BV-VB-075-P12X12-41 hose bibb, 5/8"hose, and T-70 spray gun
WC-1: American Standard 2467.016 Water Closet
DCE-1: Strike First WBDL-ABC340LV
DCE-2: Strike First WBDL-ABC10

DRAWING #: AD-017

Section : 22 42 01 & 22 42 03
Article :
Plans : M-801 PLUMBING FIXTURES SCHEDULE
Application : PLUMBING FIXTURES
Brand : AMERICAN STANDARD , MOEN , ZURN
Model :
Revised # :
Supplyer : DESCHENES
Date : **19/06/2018**
By : Martin Boucher

LV-1 to be revised per SI-003

STANTEC PROJECT #: 110126045
SUBMITTAL # AD-017

This review by Stantec is for general conformance with the design concept of Stantec's design of the:
☐ Architectural ☐ Electrical
☐ Structural ☐ Other
☑ Mechanical

Stantec

☐ REVIEWED
☑ REVIEWED, AS NOTED
☐ REVISE AND RESUBMIT
☐ NOT REVIEWED

component(s) only and does not mean that Stantec has verified or approves the shop drawing(s). The Contractor remains solely responsible for the shop drawing(s) and this review by Stantec does not relieve the Contractor of the Contractor's responsibility for errors or omissions in the shop drawing(s) or for meeting all requirements of the contract documents. This review does not mean that Stantec approves the detailed design inherent in the shop drawing, responsibility for which shall remain with the Contractor submitting same, nor does this review mean that Stantec accepts any deviation of the shop drawing(s) from the contract documents. The Contractor is responsible for confirming all dimensions and correlating them at the job site, for all construction means, methods and techniques, and for coordination of construction work of all trades, including coordination of all shop drawings.

DATE 2018-07-04
BY Brendan Zrum, P.Eng

SPEC 22 42 01 2.13 TAG : EW-1

model 7501

Portable Gravity Fed Eyewash

FEATURES & BENEFITS

CONSTRUCTION

FDA approved high-density green polyethylene tank provides the light and durable construction required in a portable unit.

MOUNTING

J-shaped stainless steel wall bracket makes for a well constructed portable mount for easy removal and re-mount.

FLOW CONTROLS

Pulling down the eyewash arm will begin flushing the 9-gallon (34.1 L) portable tank at .4 gpm (1.5 L) for a full 15 minutes, creating a full patterned flushing of the eyes.

DESIGN

Tank comes complete with a wide-fill opening and threaded cap for quick inspection, cleaning, and filling. Unit also comes equipped with top and side handles making relocation easy.



OPTIONS

- ☐ Water Additive: Model 9082, 'sterile' bacteriostatic preservative for use in portable eyewash stations. One 5 oz. (148 ml) bottle will preserve 5 to 20 gallons (18.9 to 75.7 L) of potable water for up to three months. Four bottles per carton.
- ☐ Waste Container: Model 9009 is a twenty-gallon (75.7 L) wastewater container constructed of tough yellow polymer resin. Unit is used to collect water during weekly testing of emergency equipment.

For more information, visit www.hawsco.com or call (888) 640-4297.

SPECIFICATIONS

Model 7501 portable gravity operated eyewash shall include a FDA approved high-density green polyethylene 9 gallon (34.1 L) tank, ABS plastic eyewash heads with .4 gpm (1.5 L) flow rate over 15 minutes, yellow pull-down activation arm, integral handle on top, wide-fill threaded cap, sign-mounted operating instructions, and stainless steel wall bracket (unit must be hung). Additive not included - Order separately.

APPLICATIONS

Where the eyes of any person may be exposed to injurious or corrosive materials, when suitable facilities for quick flushing of the eyes needs to be provided and a continuous supply of water is not available. Although the 7501 may be installed in a wide variety of locations, it is ideal for remote areas where protective measures are still needed. Emergency eyewash equipment shall be in unobstructed and accessible locations that require no more than 10 seconds for the injured person to reach. Model 7501 is certified by CSA to meet the ANSI Z358.1 Standard for Emergency Eyewash and Shower Equipment.

DISCLAIMER: Continued product improvements make specifications subject to change without notice. Check www.hawsco.com for the latest product information and updates.

THIS DOCUMENT IS TRUE AND CORRECT AT TIME OF PUBLICATION. CONTINUED PRODUCT IMPROVEMENTS MAKE SPECIFICATIONS AND MEASUREMENTS SUBJECT TO CHANGE WITHOUT NOTICE.

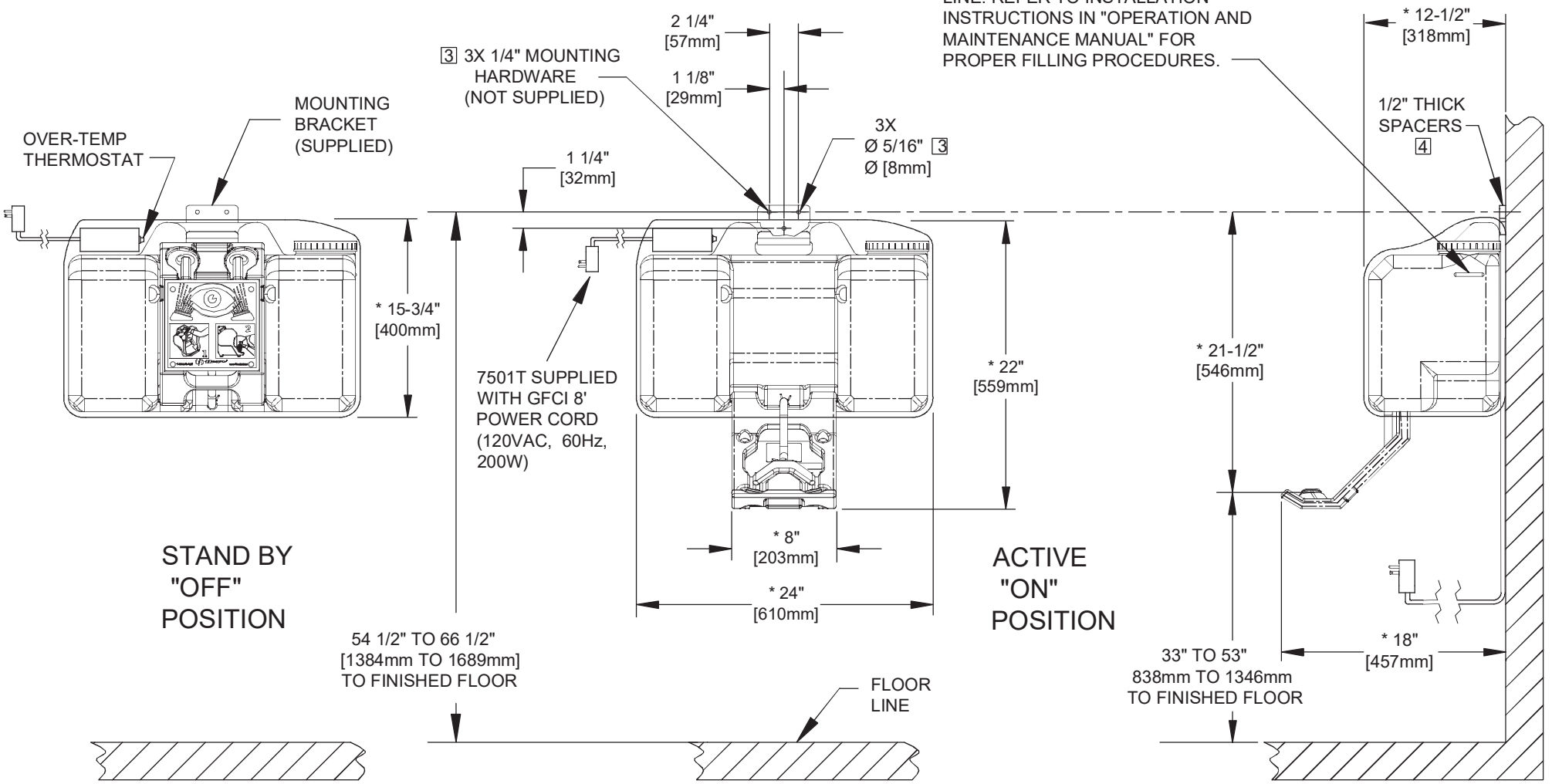

NOTES: (CONTINUED FROM SHEET 1 OF 2)

4 LOCATE ONE 1/2" THICK SPACER (QTY. 3 SUPPLIED) BEHIND EACH HOLE IN THE MOUNTING BRACKET AS SHOWN.

5. * DIMENSIONS MAY VARY ±1/2" [12.7mm].
6. **UNIT MUST BE FILLED WITH WATER BEFORE CONNECTING TO POWER SOURCE.**

(FOR MODELS 7501T240 & 7501BL240:)

7. CORD SET SHALL BE LISTED TO UL 817 AND CSA-C22.2 NO. 21 AND PROVIDED WITH 3 WIRE GROUNDING TYPE ATTACHMENT PLUG RATED 240 V, MIN. 15 A.
8. THE FLEXIBLE CORD TYPE SHALL BE TYPE S, SE, SJ, SJE, SJO, SJOO, SJT, SJTO, SJTOO, SO, SOO, ST, STO, OR STOO AND HAVE A TYPE LETTER SUFFIX OF "W," "W-A" OR "OUTDOOR."
9. THE CORD SET SHALL BE MIN. 6 FT IN LENGTH AND MIN 18 AWG SIZE FOR FLEXIBLE POWER SUPPLY CORD.
10. LISTED STRAIN RELIEF BUSHING SUITABLE FOR CORD SET SIZE AND OUTDOOR USE SHALL BE USED.
11. THE FIELD INSTALLED POWER SUPPLY CORD SET NEEDS TO BE INSTALLED BY QUALIFIED PERSONNEL.

MOUNTING DETAIL FOR:

MODELS 7501T/7501TH/7501T240/7501T240H - WITH HEATED BLANKET (SHOWN)

MODEL 7501 (SEE SHEET 1 OF 2)

Haws®
1455 KLEPPE LANE
SPARKS, NEVADA 89431
(775) 359-4712 FAX (775) 359-7424
E-MAIL: HAWS@HAWSCO.COM
WEBSITE: WWW.HAWSCO.COM

ECN NO. 5086	REVISED PER ECN: 5139	BY: CC	MODEL(S)		PART NUMBER 0002080045.D
DRAWN: MJ	DATE: 06/30/16	CHK'D.: VWC	PORTABLE EYEWASH 7501/7501T/7501TH/7501T240/7501T240H		REVISION 15
APPROVED: FV	DATE: 09/21/16		SCALE: 1:1	DRAWING TYPE: INSTALLATION	SIZE: A / SHEET 2 OF 2

©2016 Haws Corporation - All Rights Reserved. HAWS® and other trademarks used in these materials are the exclusive property of Haws Corporation.

ZN-211-B
BODY ASSEMBLY
WITH "TYPE B" STRAINER

SPECIFICATION SHEET

TAG FD-1

Dimensional Data (inches and [mm]) are Subject to Manufacturing Tolerances and Change Without Notice

SPEC 22 42 01 2.1

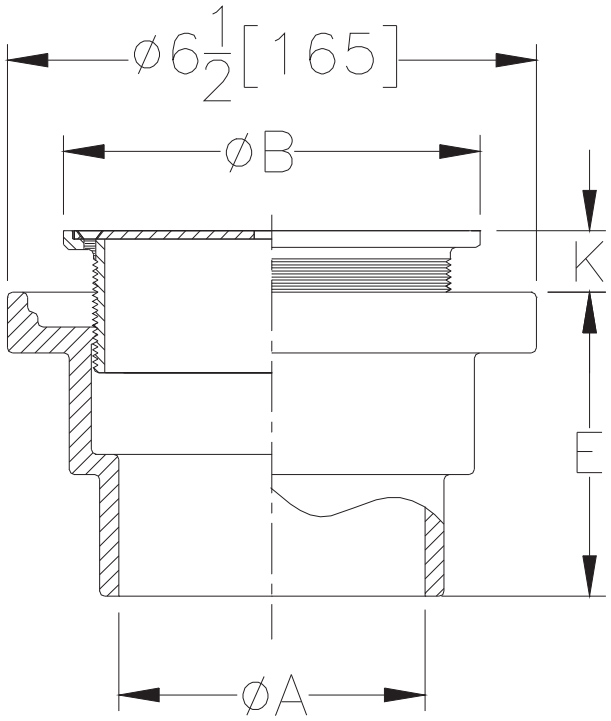

Str. Desig.	Dimensions In Inches / [mm] A Pipe Size	B Str. Dia.	K Min.	K Max.	Approx. Wt. Lbs. / [kg]	Strainer Open Area Sq. In. / [sq cm]
-B5	2 - 3 - 4 [51 - 76 - 102]	5 [127]	1/4 [6]	1-1/4 [32]	7 [3]	8 [52]
-B6	2 - 3 - 4 [51 - 76 - 102]	6 [152]	1/4 [6]	1-1/4 [32]	7 [3]	9 [58]
-B7	2 - 3 - 4 [51 - 76 - 102]	7 [178]	1/4 [6]	1-1/4 [32]	8 [4]	12 [77]
-B8	2 - 3 - 4 [51 - 76 - 102]	8 [203]	1/4 [6]	1-1/4 [32]	9 [4]	18 [116]

ENGINEERING SPECIFICATION: ZURN ZN-211-B Floor and Shower Drain, Dura-Coated cast iron body with bottom outlet, adjustable "Type B" polished nickel bronze round strainer.

OPTIONS (Check/specify appropriate options)

PIPE SIZE

2,3,4 [50,75,100]

(Specify size/type) **OUTLET**

NH No-Hub

E BODY HT. DIM.

3 3/4 [95]

SUFFIXES

____	-G	Galvanized Cast Iron
____	-P	1/2" [13] Trap Primer Connection
____	-VP	Vandal-Proof Secured Top
____	-X	Squeezin Backwater Valve
less	-Y	Sediment Bucket
____	-210	8" [203] Wide Flange Body
____	-210-WD	8" [203] Wood Deck Drain

*REGULARLY FURNISHED UNLESS OTHERWISE SPECIFIED

REV.	DATE: 11/15/99	C.N. NO. 83322
DWG. NO. 63610	PRODUCT NO. ZN-211-B	

ZURN INDUSTRIES LIMITED ♦ 3544 Nashua Drive ♦ Mississauga, Ontario L4V 1L2 ♦ Phone: 905/405-8272 Fax: 905/405-1292
In the U.S.: ZURN INDUSTRIES, INC. ♦ SPECIFICATION DRAINAGE OPERATION ♦ 1801 Pittsburgh Ave. ♦ Erie, PA 16514
Phone: 814/455-0921 ♦ Fax: 814/454-7929 ♦ World Wide Web: www.zurn.com

TRAP GUARD DRAIN INSERT PROTECTION

CAN BE USED ABOVE OR BELOW GROUND FLOOR

TRAP GUARD INSERT FITTING FITS
INSIDE OF CAST IRON OR PLASTIC PIPE

REVIEWED
by MV

SPEC 22 42 01 2.2

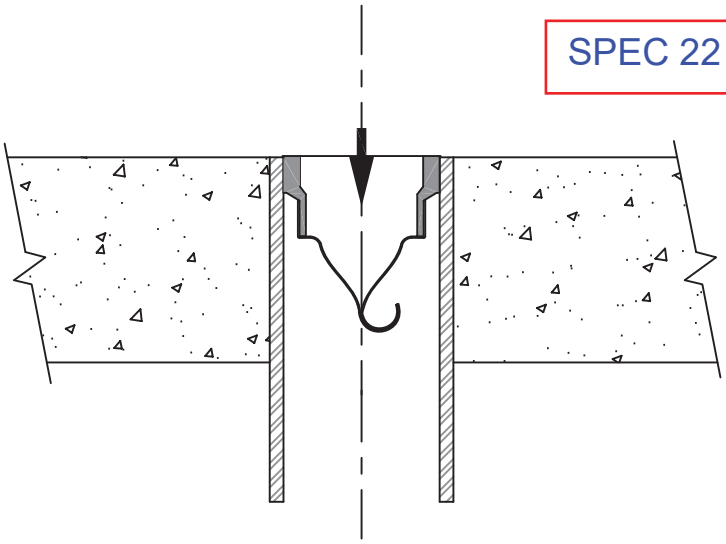

- ☐ PART NO. TG22IP 2" INSERT FITS INSIDE 2" CAST IRON PIPE
- ☐ PART NO. TG22P 2" INSERT FITS INSIDE 2" PVC OR ABS PIPE
- ☐ PART NO. SG22P 2" SUDS GUARD FITS INSIDE 2" PVC OR ABS PIPE
- → ☐ PART NO. TG33IP 3" INSERT FITS INSIDE 3" PVC, ABS OR CAST IRON PIPE
- ☐ PART NO. TG33-WADE 3" INSERT FITS INSIDE 3" WADE DRAIN TAILPIECE.

FOR TRAP GUARDS INSERTING INTO GASKET CONNECTED DRAINS, SEE DRAWING TG-23-G

IMPORTANT NOTES :

1. This insert can be installed into any open ended pipe to prevent sewer gas emission.
2. They can be inserted into an open end pipe that connects larger top floor drains.
3. They can be inserted into open ended pipe that connects floor sinks or hub drains,
4. To make a watertight seal, use an adhesive type caulk under the top flange or if the pipe opening is PVC, a small amount of solvent cement can be used under the flange.

If the trap guard device should get damaged or impaired in any way, the device can be easily removed by using a sharp screw driver under the flange.

Note: Care should be taken not to touch the elastomeric flexible material with the primer.

MAINTENANCE INSTRUCTIONS:

The Trap Guard device should be inspected periodically for build up of any type debris. The device should then be flushed out thoughly with clear warm water.

NO FIRE RATINGS ARE
REQUIRED FOR UNDERGROUND
PIPING OR OPENINGS

ProSet® SYSTEMS
FIRESTOP PENETRATOR™

DATE :
9-02-03

DRG . NO .
TG-23-IPD

NAMED FD-2 ON DRAWING M201
NAMED FD-3 ON DRAWING M801
PLUMBING FIXTURES SCHEDULE

Z546

21-1/2 [546] DIAMETER EXTRA-HEAVY-DUTY DRAIN

SPECIFICATION SHEET

TAG FD-2

Correct tag is FD-3, see SI-003

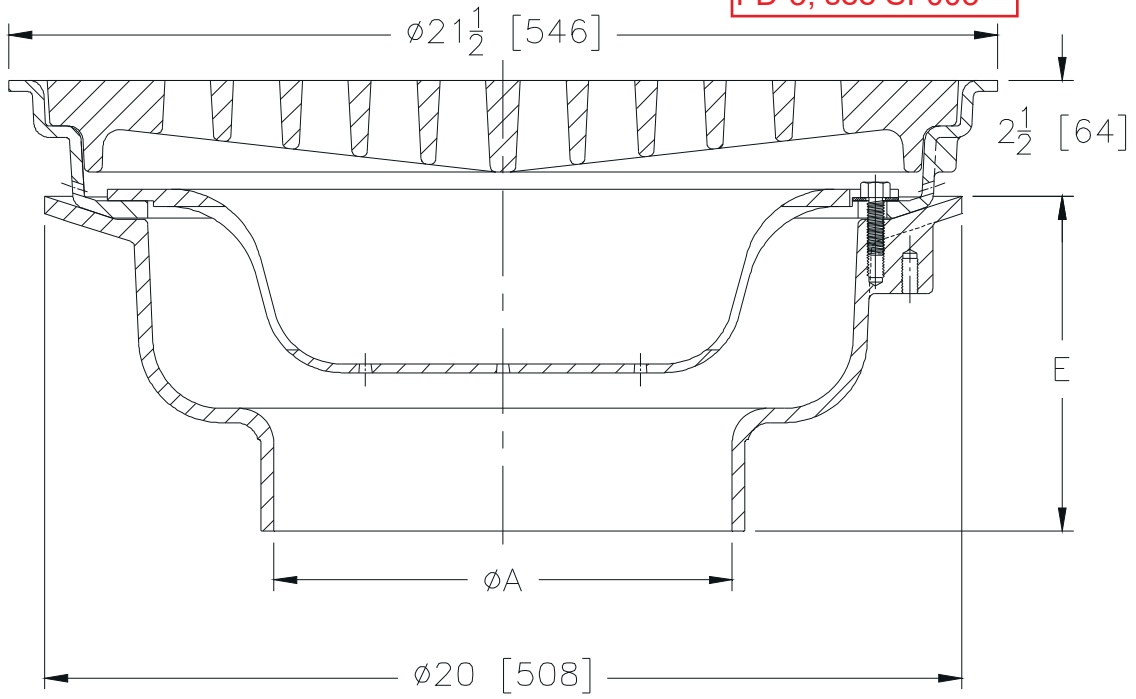

SPEC ON DRAWING M801 PLUMBING FIXTURES SCHEDULE

A - Pipe Size In [mm]	Approx. Wt. Lbs. [kg]	Grate Open Area Sq. In. [cm²]
8,10,12 [203,254,305]	163 [74]	110 [710]

ENGINEERING SPECIFICATION: ZURN Z546
21-1/2" [546mm] Diameter top drain, Dura-Coated cast iron body with bottom outlet, seepage pan and combination membrane flashing clamp and frame with seepage holes, extra-heavy-duty cast iron slotted grate with suspended sediment bucket.

OPTIONS (Check/specify appropriate options)

PIPE SIZE
8,10,12 [203,254,305]

(Specify size/type) **OUTLET**
____ NH No-Hub

'E' BODY HT. DIM.
7-5/16 [186]

PREFIXES
____ Z D.C.C.I. Body and Top*

less sediment bucket

SUFFIXES
____ -F Extension Frame (Specify total height req'd.)
____ -G Galvanized Cast Iron
____ -TS Top Secured with Slotted Screws
____ -VP Vandal-Proof Secured Top

* Regularly furnished unless otherwise specified.

Zurn Industries, LLC | **Specification Drainage Operation**
1801 Pittsburgh Avenue, Erie, PA U.S.A. 16502 · Ph. 855-663-9876, Fax 814-454-7929
In Canada | **Zurn Industries Limited**
3544 Nashua Drive, Mississauga, Ontario L4V 1L2 · Ph. 905-405-8272, Fax 905-405-1292
www.zurn.com

Rev. E
Date: 09/26/2017
C.N. No. 137914
Prod. | Dwg. No. Z546

CHARLAND THERMOJET INC
Mélangeurs et Stations à Boyaux - Mixer Unit and Hose Stations
16350 Boul. Gouin Ouest, Ste-Geneviève, Québec H9H 1E1
Tel : 1-800-624-4709 (514)624-4772 Fax : 624-4776
Courriel :charlandthermojet@videotron.ca Internet: www.charlandthermojet.com

REF : (7628)

PROJET : W.W.T.P IQALUIT

SPEC AND DRW FOR APPROVAL

WASHDOWN STATIONS TYPE : (HB-2)

MODEL: NL-553-BV-VB-41-12X12-30X063-RGT70S

CHARLAND THERMOJET INC
Mixers and hose stations
16350 Boul. Gouin Ouest, Ste-Geneviève, Québec H9H 1E1
Sans frais Tel : 1-800-624-4709 (514)624-4772 Fax : 624-4776
Courriel :info@charlandthermojet.com Web: www.charlandthermojet.com

REF: 7628

MODEL NL-553-BV-VB-075-P12X12-41
P/N: NL-553-035

Simple washing Station 3/4'' (19mm) for hot or cold water with ball valve and hose rack



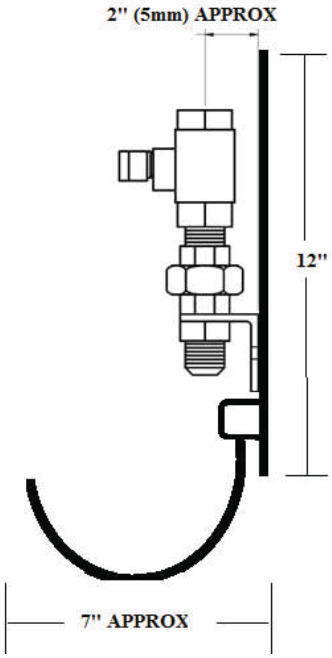

FEATURES

- Maximum operating pressure: 150 PSI (1034 kPa).
- Maximum operating temperature: 200°F (93°C).
- Required water pressure: 0 à 150 PSI (0 à 1034 kPa).
- High quality ball valve made of stainless steel.
- **Inlet 3/4'' (19mm) female NPT, Outlet 3/4'' (19mm) female NPT.**
- Rigid stainless steel bracket.
- Stainless steel plate 12'' (30.5mm) x 12'' (30.5mm) x 1/8''(.04 mm) finished # 4
- Stainless steel hose rack. Can hold up to 75 feet (22.9m) of 1/2'' (13mm) hose.

For more information or any question please contact us.

Developed and manufactured in Canada
Développé et maunfacturé au

CHARLAND THERMOJET INC
Mixing units, wash down and hoses stations
16350 Blv. Gouin Ouest, Ste-Geneviève, Québec H9H 1E1
Toll free : 1-800-624-4709 Tel : 514-624-4772 Fax : 514-624-4776
Email : charlandthermojet@videotron.ca Web : www.charlandthermojet.com

REF: 7628

INDUSTRIAL HOSES FOR GENERAL PURPOSE

High quality industrial hoses for general applications. Perfect for transporting air or liquids depending on the needs. Available in several size.



Applications :	General purpose for air or water line inside or outside.				
Cover :	Red smooth weather and abrasion resistant PVC.				
Reinforcement :	Multiple layers of synthetic yarns.				
Tube :	Black oil resistant PVC blend.				
Temperature :	- 30 °C to 70 °C (-22 °F to 160 °F).				
Nominal I. D.	**Nominal O. D.**	**PSI**	**WT. (pound)**	**Standard pkg**	**Part number**
1/4”	0.55”	250	0.13	300’	GP-025-250
3/8”	0.71”	250	0.19	300’	GP-038-250
1/2”	0.87”	250	0.27	300’	GP-050-250
5/8”	1.16”	250	0.42	300’	GP-063-250
1”	1.42”	200	0.54	300’	GP-100-200
1-1/4”	1.73”	150	0.64	100’	GP-125-150
1-1/2”	2.05”	150	0.74	100’	GP-150-150
2”	2.60”	150	1.01	100’	GP-200-150
Cut lengths :	Plus 5%				
Standard Lengths :	1/4” – 1” 50’/ 100’/ 300’. 1-1/4” – 2” 50’ / 100’.				
Recommended couplings	High pressure 1/2’’-1’’ for air service if working pressure exceeds 150 PSI. High pressure, short shank, universal, or combination nipples for all other sizes, or if used in water service.				



Provide 10m of hose for each hosebibb station

For more information or any questions please contact us.

CHARLAND THERMOJET INC
Mixing units, wash down and hoses stations
16350 Blv. Gouin Ouest, Ste-Geneviève, Québec H9H 1E1
Toll free : 1-800-624-4709 Tel : 514-624-4772 Fax : 514-624-4776
Email : charlandthermojet@videotron.ca Web : www.charlandthermojet.com

REF: 7628

T-70 SERIES

INDUSTRIAL AUTOMATIC SPRAY NOZZLE GUN

Ideal for many cleaning tasks in every kind of industrial plants. Easy to use.

NOZZLE GUN : For use with hot and cold water only.
Do not use with steam

T-70 MODEL



T-75 MODEL



T-77 MODEL



FEATURES

- Body made from brass casting. (Alse available in stainless steel in option.)
- Maximum operating pressure : 150 PSI (1034 kPa).
- Maximum operating temperature : 200 °F (93 °C).
- Flow rates : 5-7 GPM (18.9 – 26.5 l/min) under normal operating conditions 50-80 PSI (345 – 552 kPa), 10 GPM (37.9 l/min) @ 150 psi (1034 kPa).
- This gun does a better work with less water flow. The precision of construction of this gun allow the operator to have several types of water jets simply by pressing the handle. This model close automatically when the handle is released, which eliminate any water wasting.

WWTP IQUALUIT

TAG: DCE-1

STRIKE FIRST CORPORATION

777 TAPSCOTT RD.
SCARBOROUGH, ONTARIO, CANADA M1X 1A2
PH: 416-299-7767 FAX: 416-299-8039
TOLL FREE: 1-888-575-1132
TOLL FREE FAX: 1-888-575-1134
www.strike-first.com info@strike-first.com

5 LB MULTI-PURPOSE DRY CHEMCIAL FIRE EXTINGUISHER

MODEL: WBDL-ABC340LV



- STEEL CYLINDER COMPLETE WITH CYLINDER SKIRT
- SUPER DURABLE POLYESTER POWDER PAINT FINISH
- WATERPROOF STAINLESS STEEL GAUGE
- STRONG POLYESTER POWDER COATED STEEL HANDLES
- BAR CODED LABEL
- COMPLETE WITH WALL HOOK *OR* COAST GUARD VEHICLE / MARINE BRACKET

SPEC ON DRAWING M801

FIRE EXTINGUISHER SCHEDULE

SPECIFICATIONS	
CAPACITY	5 LBS.
ULC RATING	3-A : 40-B, C
RANGE (FT.)	8 - 10
DISCHARGE TIME	13 - 14 SECS.
PSI	195
HEIGHT	16" (41 cm)
WIDTH	6 3/4" (17 cm)
DIAMETER	4 1/4" (11 cm)
WEIGHT	10 1/2 LBS. (4.8 kg.)

MANUFACTURED AND TESTED TO THE FOLLOWING STANDARDS:

CAN/ULC-S508-M90
ANSI/UL 711
CAN/ULC-S504-M86
ANSI/UL 299
U.S.C.G.

ULC LISTED

CLASS: A B C



6 YEAR WARRANTY

MADE IN CANADA

WWTP IQUALUIT

TAG: DCE-2

STRIKE FIRST CORPORATION

777 TAPSCOTT RD.
SCARBOROUGH, ONTARIO, CANADA M1X 1A2
PH: 416-299-7767 FAX: 416-299-8039
TOLL FREE: 1-888-575-1132
TOLL FREE FAX: 1-888-575-1134
www.strike-first.com info@strike-first.com

10 LB MULTI-PURPOSE DRY CHEMCIAL FIRE EXTINGUISHER

MODEL: WBDL-ABC10



SPEC ON DRAWING M801
FIRE EXTINGUISHER SCHEDULE

SPECIFICATIONS	
CAPACITY	10 LBS.
ULC RATING	6-A : 80-B, C
RANGE (FT.)	10 - 15
DISCHARGE TIME	14 - 16 SECS.
PSI	235
HEIGHT	21 1/4" (54 cm)
WIDTH	9 1/2" (24 cm)
DIAMETER	5 1/8" (13 cm)
WEIGHT	19 1/4 LBS. (8.8 kg.)

MADE IN CANADA

- STEEL CYLINDER COMPLETE WITH CYLINDER SKIRT
- SUPER DURABLE POLYESTER POWDER PAINT FINISH
- WATERPROOF STAINLESS STEEL GAUGE
- STRONG POLYESTER POWDER COATED STEEL HANDLES
- BAR CODED LABEL
- COMPLETE WITH WALL HOOK
  OPTIONAL COAST GUARD VEHICLE / MARINE BRACKET SOLD SEPERATELY

MANUFACTURED AND TESTED TO THE FOLLOWING STANDARDS:

CAN/ULC-S508-M90
ANSI/UL 711
CAN/ULC-S504-M86
ANSI/UL 299
U.S.C.G.

ULC LISTED

CLASS: A B C



6 YEAR WARRANTY

WWTP IQUALUIT

SPEC 22 42 03 2.1

TAG : WC-1

American Standard
Style That Works Better

CADET RIGHT HEIGHT™ ELONGATED PRESSURE-ASSISTED 6L TOILET

VITREOUS CHINA

BARRIER FREE

CADET RIGHT HEIGHT™ ELONGATED PRESSURE-ASSISTED 6L TOILET



❑ **2467 016**

- Vitreous china
- Low-consumption (6.0 Lpf/1.3 gpf)
- EverClean® surface inhibits the growth of stain- and odor-causing bacteria, mold, and mildew on the surface
- Elongated 16-1/2" (419mm) high bowl rim for accessible applications
- Pressure-assisted siphon jet flush action
- Fully-glazed 2-1/8" (54mm) trapway) ball pass
- Generous 10 x 12" (254x305mm) water surface area
- Close-coupled Flushometer tank*
- Metal chrome trip lever
- Speed Connect™ tank/bowl coupling system
- Sanitary dam on bowl
- 2 bolt caps
- 100% factory flush tested
- 12" (305mm) Rough-in

Separate Component Parts:

❑ **3483 001** Elongated 16-1/2" (419mm) high Universal Bowl with 2 bolt caps

❑ **4142 016** Flushometer tank complete with coupling components

Nominal Dimensions:
768 x 521 x 781mm
(30-1/4" x 20-1/2" x 30-3/4")

Fixture only, seat and supply by others

Recommended static pressure range
25 psi - 80 psi

Alternate Configurations Available:

❑ **4142 600** Tank with tank cover locking device

❑ **4142 800** Tank with right hand trip lever

❑ **4142 900** Tank complete with right hand trip lever and tank cover locking device

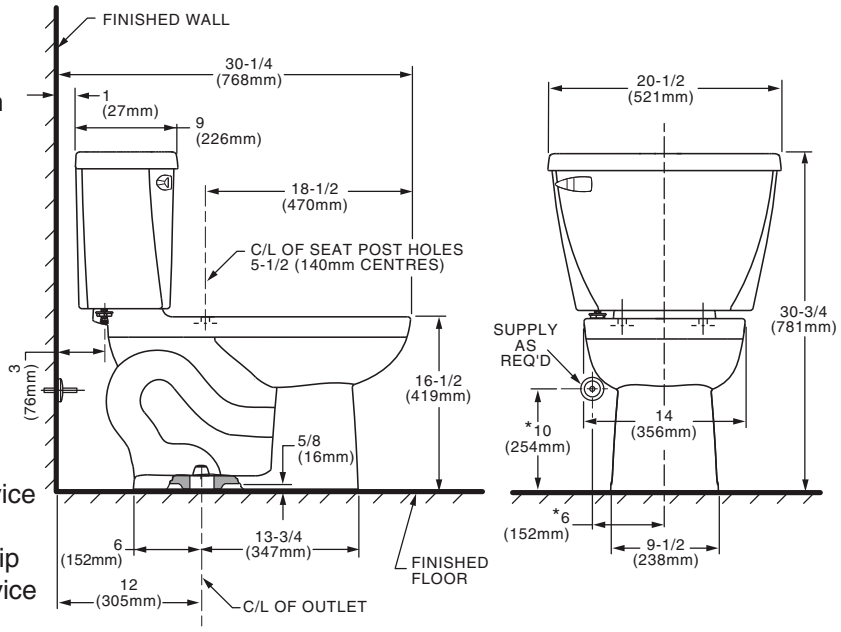

Compliance Certifications -
Meets or Exceeds the Following Specifications:

- ASME A112.19.2-2008 / CSA B45.1-08 for Vitreous China Fixtures

To Be Specified

❑ Colour: ❑ White ❑ Bone ❑ Linen ❑ Black

❑ Seat: American Standard #5324 019 "Rise and Shine" (with easy to clean lift-off hinge system) solid plastic closed, elongated front seat with cover. See price page.

❑ Seat: #5321 110 EverClean® Elongated Seat with Slow Close Snap-Off Hinges

❑ Alternate Seat:

❑ Supply with stop:

NOTES:
THIS TOILET IS DESIGNED TO ROUGH-IN AT A MINIMUM DIMENSION OF 305mm (12") FROM FINISHED WALL TO C/L OF OUTLET.
SUPPLY NOT INCLUDED WITH FIXTURE AND MUST BE ORDERED SEPARATELY.
* DIMENSION SHOWN FOR LOCATION OF SUPPLY IS SUGGESTED.
FOR ADDITIONAL INFORMATION REFER TO INSTALLATION INSTRUCTIONS SUPPLIED.
IMPORTANT: Dimensions of fixtures are nominal and may vary within the range of tolerance established by ANSI Standard A112.19.2
These measurements are subject to change or cancellation. No responsibility is assumed for use of superseded or voided pages.

When installed so top of seat is 432 to 483mm (17" to 19") from the finished floor.
MEETS THE AMERICAN DISABILITIES ACT GUIDELINES AND ANSI A117.1 REQUIREMENTS FOR ACCESSIBLE AND USEABLE BUILDING FACILITIES- CHECK LOCAL CODES.

* Flushometer tank system by Flushmate® Div. of Sloan Valve Co.

TOI-223

07/10

© 2010 American Standard

BEMIS COMMERCIAL

COMMERCIAL HEAVY-DUTY PLASTIC TOILET SEAT



MODEL #	COLOR #
1055/1055SSC	WHITE

DESCRIPTION:

Open front less cover, elongated, heavy-duty, injection molded solid plastic toilet seat. Features two molded-in bumpers, non self-sustaining (1055) or self-sustaining (1055SSC) check hinges with non-corrosive 300 Series stainless steel posts, pintles and hardware. This seat complies with IAPMO/ANSI Z124.5-2013 Plastic Toilet Seats as a class Commercial Heavy Duty.

SPECIFICATIONS:

Size:	Elongated
Material:	Plastic
Style:	Open Front less Cover
Bumpers:	Two
Hinges:	Plastic Non Self-Sustaining (1055) or Self-Sustaining (1055SSC) with 300 Series Stainless Steel Posts and Pintles
Fastening System:	Non-Corrosive 300 Series Stainless Steel Nuts

FEATURES:

Non-Corrosive 300 Series Stainless Steel Posts, Pintles and Nuts



PLASTIC HINGES WITH STAINLESS STEEL POSTS AND PINTLES



NON-CORROSIVE STAINLESS STEEL NUTS

DIMENSIONS:

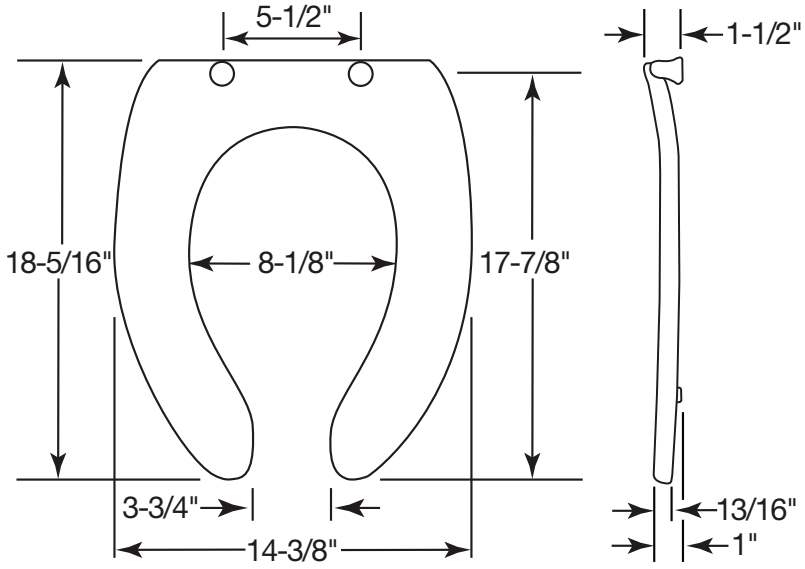

Proudly Made in the USA

Bemis Manufacturing Co., Sheboygan Falls, WI 53085
www.ToiletSeats.com

Phone: 800-558-7651 Fax: 800-292-3647

©2014 0B7012284 REVB

INSTALLATION INSTRUCTIONS
CARE AND MAINTENANCE

American Standard
Style That Works Better

Cadet® 3 Concealed Trapway
Studio® Concealed Trapway
Right Height®, Elongated Model 2985, 2989, 2794
Right Height®, Round Front Model 2984, 2988, 2795

Thank you for selecting American Standard - the benchmark of fine quality for over 100 years. To ensure this product is installed properly, please read these instructions carefully before you begin. (Certain installations may require professional help.) Also be sure your installation conforms to local codes.

⚠ CAUTION: PRODUCT IS FRAGILE. TO AVOID BREAKAGE AND POSSIBLE INJURY HANDLE WITH CARE!
NOTE: *Pictures may not exactly define contour of china and components.*

RECOMMENDED TOOLS AND MATERIALS

Putty Knife	Regular Screwdriver	Adjustable Wrench	Sealant	Tape Measure
Hacksaw	Wax Ring/Gasket	Flexible Supply Tube	Closet Bolts	Carpenters Level

1 REMOVE OLD TOILET

a. Close toilet supply valve and flush tank completely. Towel or sponge remaining water from tank and bowl.
b. Disconnect and remove supply line. NOTE: *If replacing valve, first shut off main water supply!*
c. Remove old mounting hardware, remove toilet and plug floor waste opening to prevent escaping sewer gases.
d. Remove closet bolts from flange and clean away old wax, putty, etc. from base area.
NOTE: *Mounting surface must be clean and level* ***before*** *new toilet is installed!*

2 ROUGHING-IN DIMENSIONS:

NOTE: *Distance from wall to closet flange centerline must be as listed below:*

RIGHT HEIGHT ELONGATED 2-PIECE TOILET

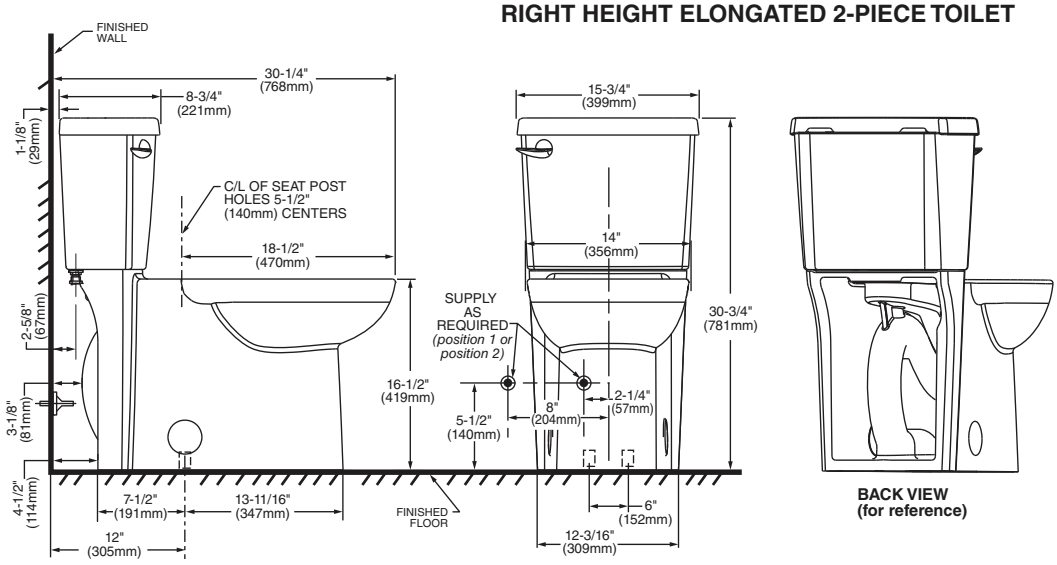

RIGHT HEIGHT ROUND FRONT 2-PIECE TOILET

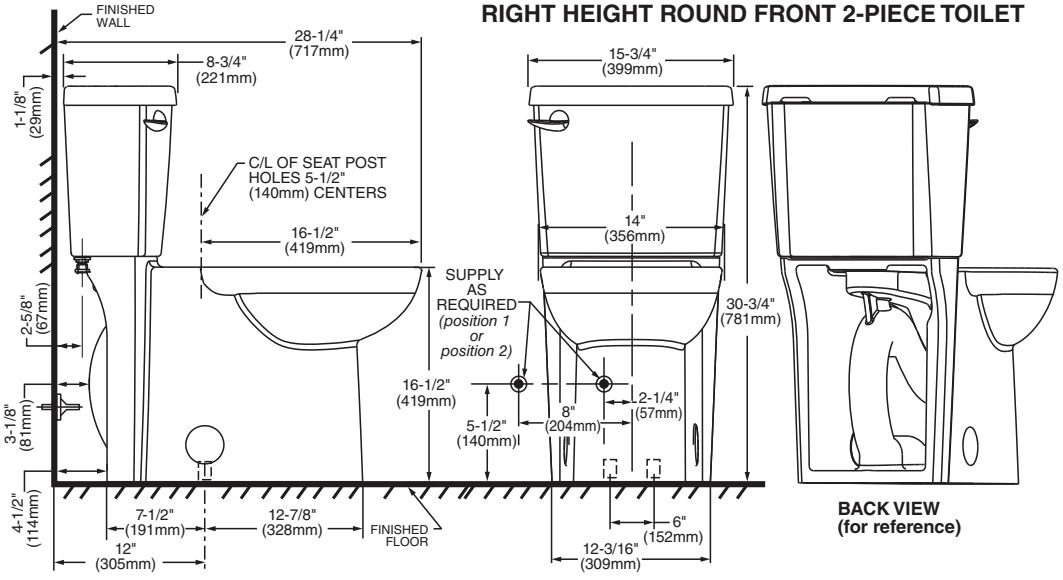

IMPORTANT: Water supply on the wall is required at 2-1/4" or 8" from centerline of the toilet (see rough-in). First suggested position is hidden behind the toilet. The geometry of the toilet gives space for this installation. The second suggested position is next to the toilet. Between these two positions, the space for the supply between wall and toilet is limited to 4-1/2". In this case, check your supply and hose dimensions.

SAVE FOR FUTURE USE

Product names listed herein are trademarks of AS America, Inc.
© AS America, Inc. 2011

3

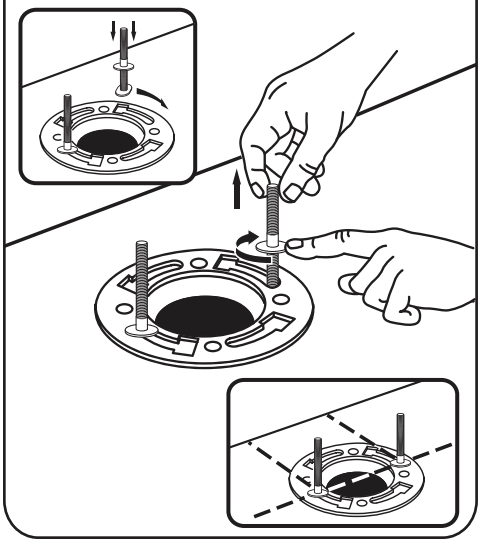

4

Press firmly.

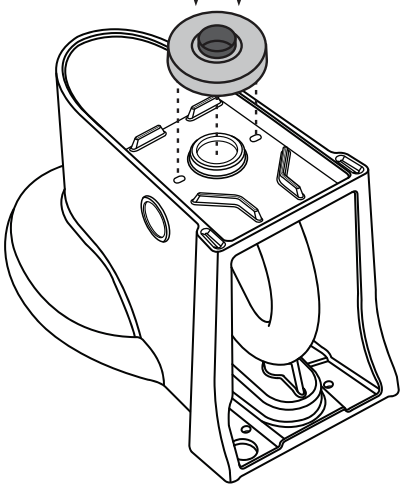

5

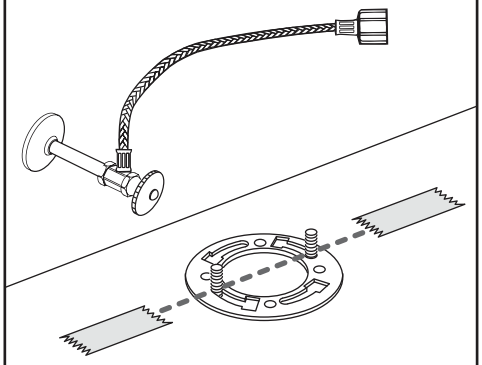

TIP: Place 2 pieces of masking tape on floor (as shown) to help with alignment in step 6.

6

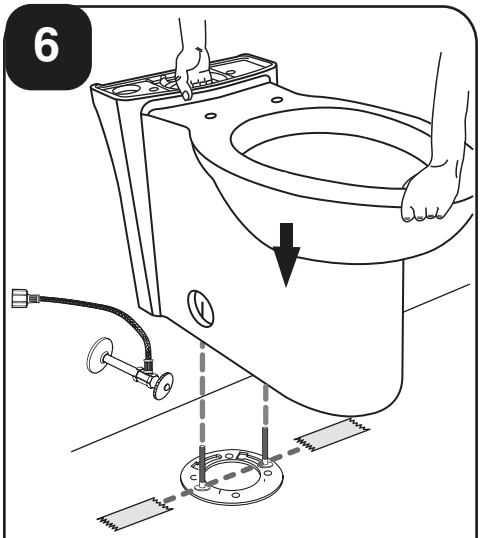

Apply weight evenly. Do not move after placement. Water tight seal may break.

7

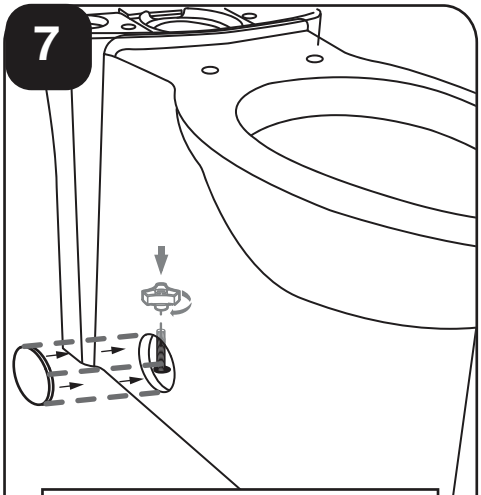

⚠ **Hand Tighten Only. Do Not Overtighten.**

8

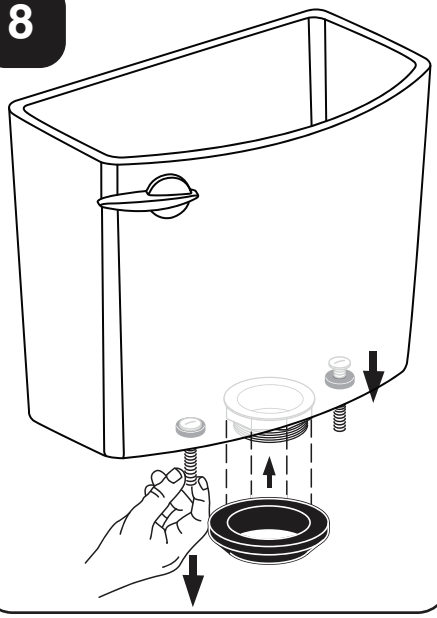

9

Thread, then hand tighten water supply.

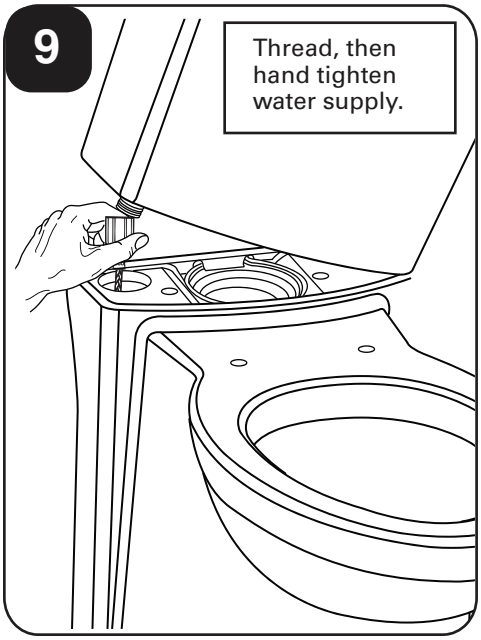

10

Tighten handles alternately until tank contacts bowl. **HAND TIGHTEN ONLY!**

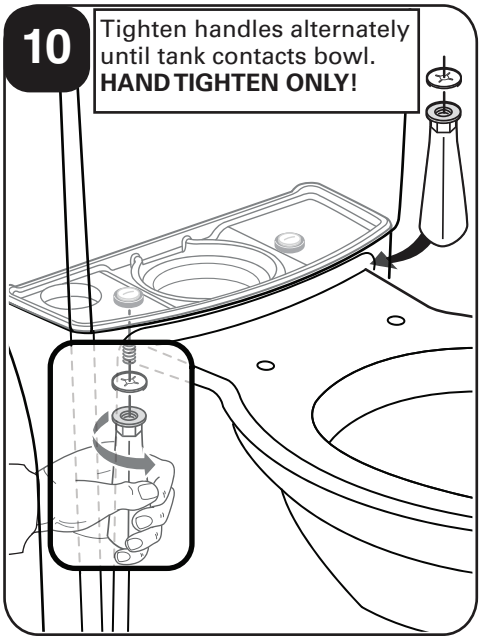

*** For seat installation, see instructions included with seat.**

⚠ WARNING:

Overtightening of water supply line nuts could result in breakage and potential flooding. If the connection leaks after hand tightening, replace the supply line. Do not use any type of sealant on the water supply connection.

⚠ ***Use of plumber's putty, pipe dope, or any other type of sealant will void the warranty.***

11

A

Turn on water supply.

B

Adjust water level to level indicated on tank by turning water level adjustment knob to move float cup up or down.

C

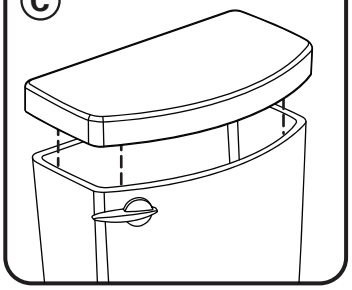

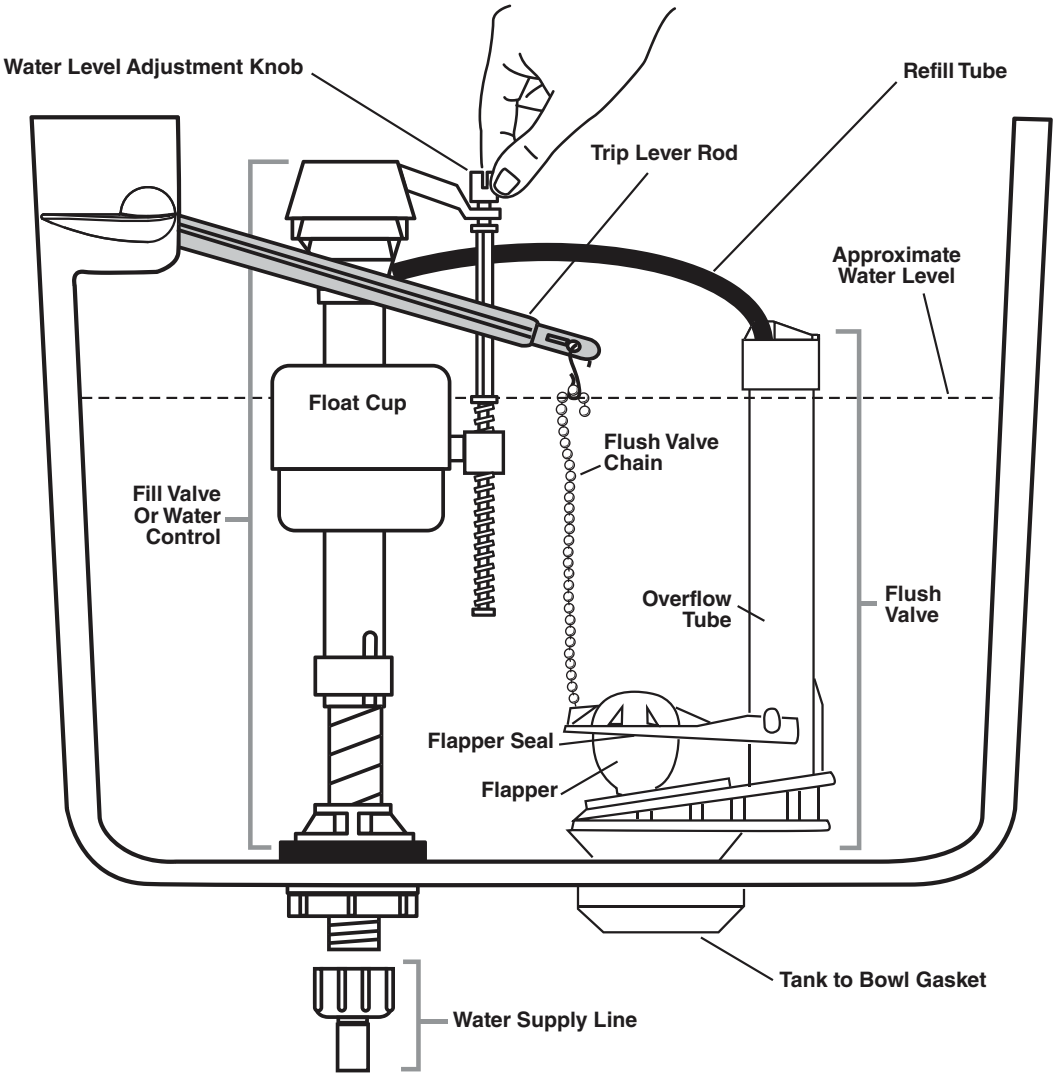

CARE AND CLEANING:

When cleaning your toilet, wash it with mild, soapy water, rinse thoroughly with clear water and dry with a soft cloth.

WARNING: Do not use in-tank cleaners. These products can seriously corrode fittings in the tank. This damage can cause leakage and property damage.

American Standard shall not be responsible or liable for any damage caused by the use of in-tank cleaners.

REPAIR PARTS LIST

Repair parts are determined by toilet tank number which can be found marked inside tank.
NOTE: *"XXX" represents color or trim finish options. Specify when ordering.*

PART NUMBER	DESCRIPTION	TANK			
		4000.001 1.6 gpf/ 6.0 Lpf	4000.101 1.28 gpf/ 4.8 Lpf	4000.004 1.6 gpf/ 6.0 Lpf	4000.104 1.28 gpf/ 4.8 Lpf
738903-XXX0A	Tank Lever LH	√	√		
7381064-XXX0A	Tank Lever LH			√	√
7301540-200.XXX0A	Bolt Cap Kit (consists of 2 caps, 2 sleeves, & 2 retaining rings)	√	√	√	√
7381125-400.0070A	Fluidmaster 400A Inlet Valve	√	√	√	√
7381146-401.0070A	Flushvalve Assembly - 3 inch (includes flapper)	√			
7381193-201.0070A	Flapper Assembly - 3 inch	√			
7381146-406.0070A	Flushvalve Assembly (HET) - 3 inch (includes flapper)		√		
7381193-203.0070A	Flapper Assembly (HET) - 3 inch		√		
7381147-200.0070A	EZ-Install Tank Coupling Kit	√	√	√	√
735154-400.XXX	Tank Cover - 12 inch rough	√	√		
735158-400.XXX	Tank Cover - 12 inch rough			√	√
5283.110.XXX	Elongated Rim Seat - Slow Close	√	√		
5281.110.XXX	Round Front Rim Seat - Slow Close	√	√		
5218.110.XXX	Elongated Rim Seat - Slow Close			√	√
5121.110.XXX	Round Front Rim Seat - Slow Close			√	√
738570-100.0070A	Refill Tube	√	√	√	√
7381146-408.0070A	Flushvalve Assembly - 3 inch (includes flapper)			√	
7381146-409.0070A	Flushvalve Assembly (HET) - 3 inch (includes flapper)				√
7381193-205.0070A	Flapper Assembly - 3 inch			√	
7381193-206.0070A	Flapper Assembly (HET) - 3 inch				√
7381211-200.0070A	Silicone Flapper Seal	√	√	√	√
7381167-200.0070A	Bowl to Floor Knobs	√	√	√	√

TROUBLESHOOTING GUIDE

See Step 11 For Diagram

Problem	Possible Cause	Corrective Action
Does not flush	a. Water supply valve closed. b. Supply line blocked. c. Flush valve chain too loose or disconnected. d. Sand or debris lodged in water control.	a. Open valve and allow water to fill tank. b. Shut off water supply, disconnect supply line and inspect all gaskets and washers. Reassemble. c. Readjust chain length as required. d. Shut off water supply. Remove cap and clean as per Fluidmaster maintenance instructions at: www.americanstandard-us.com/enews/fluidmasterguide.pdf
Poor or sluggish flush	a. Bowl water level too low. b. Supply valve partly closed. c. Partially clogged trapway and/or drain pipe and/or vent. d. Supply pressure too low.	a. Check that refill tube is connected to water control and inserted into overflow tube without being kinked or damaged. b. Open supply valve fully. Be sure that proper supply tube size is used. c. Remove obstruction. Consult a plumber if necessary. d. Normal supply pressure must be at least 20 psi.
Toilet leaks	a. Poor supply line connection. b. Poor bowl to tank/floor connection.	a. Review Step 10 of installation procedure. b. Review Step 3 through 8 of installation procedure.
Toilet does not shut off	a. Flapper seal leaking or deformed. b. Sand or debris lodged in water control. c. Flush valve chain too tight, holding flapper open.	a. Clean debris from seal surface. Replace flapper seal as needed. b. Shut off water supply. Remove cap and clean as per Fluidmaster maintenance instructions at: www.americanstandard-us.com/enews/fluidmasterguide.pdf c. Readjust chain length as needed.
Toilet bowl rocks after installation	a. Wax ring not fully compressed. b. Floor not level.	a. Retighten bowl-to-floor knobs. b. Use toilet shims and /or place a bead of caulk around the base of the toilet.

For Repair Parts List, See Under Tank Lid.

In the United States:
American Standard Brands
P.O. Box 6820
Piscataway, New Jersey 08855
Attention: Director of Consumer Affairs

For residents of the United States, warranty information may also be obtained by calling the following toll free number: (800) 442-1902
www.americanstandard.com

In Canada:
AS Canada ULC
5900 Avebury Rd.
Mississauga, Ontario
Canada L5R 3M3

Toll Free: (800) 387-0369
www.americanstandard.ca

In Mexico:
American Standard B&K Mexico
S. de R.L. de C.
Via Morelos #330
Col. Santa Clara
Ecatepec 55540 Edo. Mexico
Toll Free: 01-800-839-1200
www.americanstandard.com.mx

American Standard
Style That Works Better

BARRIER FREE

TAG : LV-1

NEWBERN™ VANITY TOP
FINE FIRE CLAY

NEWBERN™ VANITY TOP

❑ **7820.400** Faucet holes on 4" centers
❑ **7820.800** Faucet holes on 8" centers

- Seamless one piece design made from Fine Fire Clay
- Interior Oval bowl design
- Includes 1" backsplash
- Fits most standard 30" vanities
- Pre-drilled for 4" and 8" faucet holes
- Includes safety overflow design

Nominal Dimensions:
31-1/8" x 22-7/8"
(791 x 581 mm)

Bowl sizes:
16" (406mm) wide
13" (330mm) front to back
6-1/2" (165mm) deep

Compliance Certifications -
Meets or Exceeds the Following Specifications:
- ASME A112.19.9M for Non-Vitreous Ceramic Fixtures

To Be Specified
❑ Color: ❑ White
❑ Faucet:
❑ Faucet Finish:
❑ Supplies:
❑ Trap:

* See faucet section for additional models available



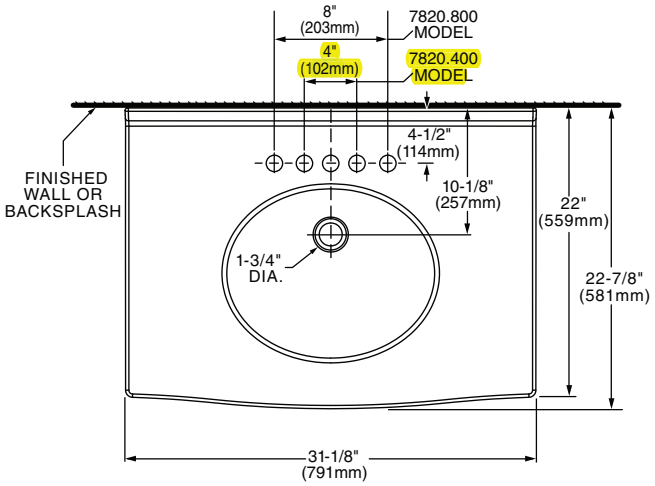

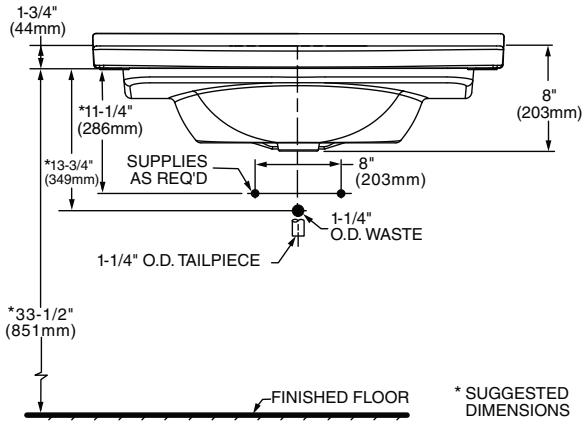

NOTES:
* DIMENSIONS SHOWN FOR LOCATION OF SUPPLIES AND "P" TRAP ARE SUGGESTED.
FITTINGS NOT INCLUDED WITH FIXTURE AND MUST BE ORDERED SEPARATELY.
FOR COUNTERTOP CUTOUT AND INSTALLATION INSTRUCTIONS USE TEMPLATE SUPPLIED WITH SINK.

IMPORTANT: Dimensions of fixtures are nominal and may vary within the range of tolerances established by ANSI Standard A112.19.9M. These measurements are subject to change or cancellation. No responsibility is assumed for use of superseded or voided pages.

© 2011 AS America Inc.

American Standard™

ASSEMBLY & INSTALLATION INSTRUCTIONS

Newbern Vanity Top™ 7820.400

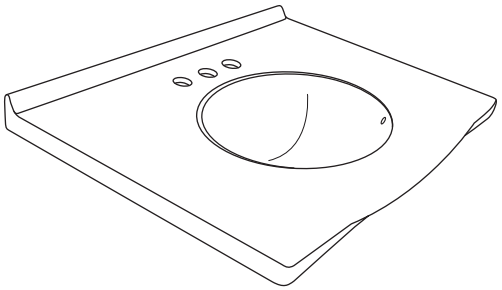

Fits most 30" X 21" Vanity Bases

Thank you for selecting our products...products which have been the benchmarks of fine quality for over 100 years. To help insure that the installation process will proceed smoothly, please read these instructions carefully before you begin. Also, review the recommended tools and materials list; carefully unpack and examine your new plumbing fixture.

To maintain the beauty of the finish, avoid placing the furniture in direct sunlight, as sunlight causes fading. Also avoid extreme changes in temperature by arranging furniture away from radiators, heat and air vents, and air conditioning units. Avoid placing furniture directly under windows.

Recommended Tools & Materials

Basin Wrench, Adjustable Wrench, Tubing Cutter, Putty Knife, Channel Locks, Pipe Wrench, Tape Measure, Plumbers' Putty, Silicone Caulk, Level

Roughing-in Dimensions

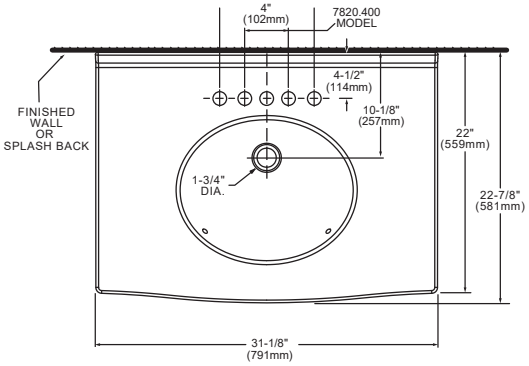

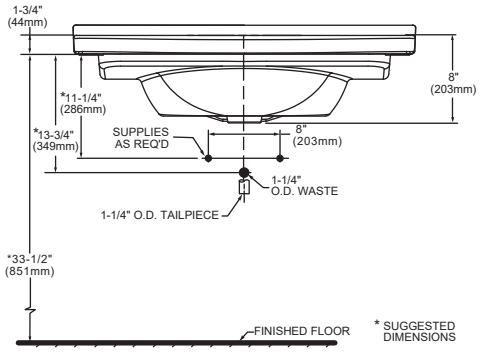

Vanity Installation

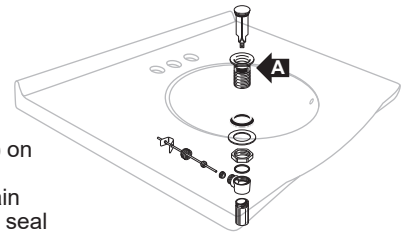

Two people recommended for this installation

Mount the drain assembly (not included) on the sink. Be certain to apply a bead of sealing putty on the underside of the drain (Part "A") in order to ensure a watertight seal between the sink and drain. Remove excess putty after installing the drain on the sink.

Apply a bead of silicone adhesive to the rim of the vanity. Place the top centered left to right on the vanity and with the back edge of the top even with the rear of the vanity. Apply a bead of silicone along the top back edge of the vanity top and the wall. Clean up any excess silicone.

Connect the trap to the drain assembly hand tight to check alignment. It may be necessary to cut off part of the tailpiece (area "B") or part horizontal leg of the trap (area "C").

Connect hot and cold supply lines to the shut off valves. Tighten trap joints for watertight assembly.

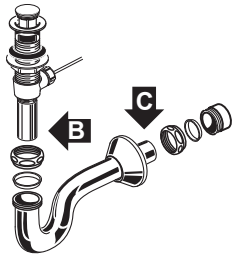

CARE AND CLEANING

When cleaning your vanity top, wash it with mild, soapy water, rinse thoroughly with clear water and dry with a soft cloth. Avoid abrasive detergents, disinfectants, or cleaning products in aerosol cans.

AMERICAN STANDARD ONE-YEAR LIMITED WARRANTY

If inspection of this American Standard plumbing product, within one year after its initial purchase, confirms that it is defective in materials or workmanship, American Standard will repair or, at its option, exchange the product for a similar model.

This warranty **does not apply** to local building code compliance. Since local building codes vary considerably, the purchaser of this product should check with a local building or plumbing contractor to insure local code compliance before installation.

This warranty **shall be void** if the product has been moved from its initial place of installation; if it has been subjected to faulty maintenance, abuse, misuse, accident or other damage; if it was not installed in accordance with American Standard's instructions; or if it has been modified in a manner inconsistent with the product as shipped by American Standard.

American Standard's option to repair or exchange the product under this warranty does not cover any labor or other costs of removal or installation, **nor shall American Standard be responsible for any other incidental or consequential damages attributable to a product defect or to the repair or exchange of a defective product, all of which are expressly excluded from this warranty.** (Some states or provinces do not allow the exclusion or limitation of implied warranties, so this exclusion may not apply to you.)

This warranty gives you specific legal rights. You may have other statutory rights that vary from state to state or from province to province, in which case this warranty does not affect such statutory rights.

For service under this warranty, it is suggested that a claim be made through the contractor or dealer from or through whom the product was purchased, or that a service request (including a description of the product model and of the defect) be sent to the following address:

In the United States:
American Standard Inc.
P.O. Box 6820
Piscataway, New Jersey 08855
Attention: Director of Consumer Affairs

In Canada:
American Standard
2480 Stanfield Rd.
Mississauga, Ontario
Canada L4Y 1S2

Toll Free: (800) 387-0369

In Mexico:
Customer Service Manager
Ideal Standard, S.A. de C.V.
Via Morelos #330
Col. Santa Clara
Ecatepec 55540 Edo. Mexico

For residents of the United States, warranty information may also be obtained by calling the following toll free number: (800) 442-1902

PROJET : WWTP IQUALUIT

NOTE : MOEN 8425 DISCONTINUE

LV-1 : ROBINET

MOEN

Buy it for looks. Buy it for life.®

Specifications

There is more than 1 version of this model.
Page down to identify the version you have.

DESCRIPTION
- Metal construction with various finishes identified by suffix
- Flexible supplies with 3/8" compression fittings
- Includes metal or 50/50 pop-up type waste assembly where noted

OPERATION
- Pivot action lever style handle
- Temperature controlled through 100˚ degree arc of handle travel

FLOW
- Flow is limited to 1.5 gpm max (5.7L/min) at 60 psi

CARTRIDGE
- 1255™ Duralast™ cartridge
- Nonmetallic/nonferrous and stainless steel material

STANDARDS
- Third party certified to WaterSense,® CSA B-125.1, ASME A112.18.1 and all applicable requirements referenced therein including NSF61/9
- Contains no more than 0.25% weighted average lead content
- Complies with California Proposition 65 and with the Federal Safe Drinking Water Act
- **ADA** for lever handle

WARRANTY
- Lifetime limited warranty against leaks, drips and finish defects to the original consumer purchaser
- 5 year warranty if used in commercial installations

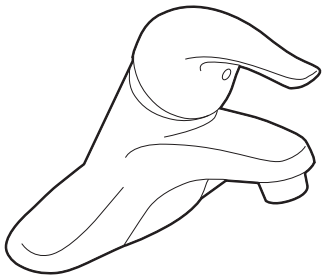

CHATEAU®
Single-Handle Lavatory Faucet

with Metal Waste Assembly
Model: L4625 series
L4631BC
Bulk Packed (12 per carton):
L64624 series

with 50/50 Waste Assembly
Bulk Packed (12 per carton):
L64625 series

Less Waste
Bulk Packed (12 per carton):
L64600 series

NOTE: THIS FAUCET IS DESIGNED TO BE INSTALLED THRU 3-1" DIA. HOLES, 2" ON CENTER

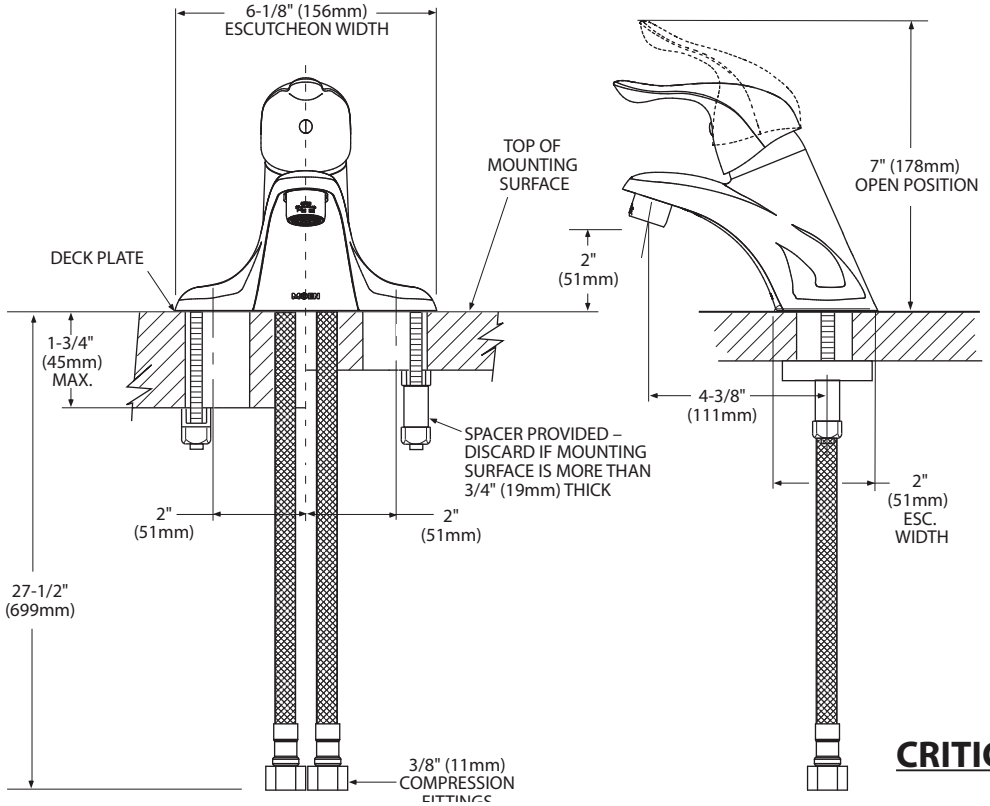

WaterSense Meets EPA Criteria
Certified by IAPMO R&T

CRITICAL DIMENSIONS

(DO NOT SCALE)

Rev. 3/11

FOR MORE INFORMATION CALL: 1-800-BUY-MOEN
www.moen.com

MOEN

Buy it for looks. Buy it for life.®

Specifications

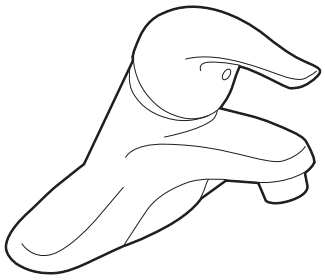

CHATEAU®
Single-Handle Lavatory Faucet

with Metal Waste Assembly
Model: L4625 series
L4631BC
Bulk Packed (12 per carton):
L64624 series

with 50/50 Waste Assembly
Bulk Packed (12 per carton):
L64625 series

Less Waste
Bulk Packed (12 per carton):
L64600 series

NOTE: THIS FAUCET IS DESIGNED TO BE INSTALLED THRU 3-1" DIA. HOLES, 2" ON CENTER

DESCRIPTION
- Metal construction with various finishes identified by suffix
- 16" long 3/8" tubing connections
- Includes metal or 50/50 pop-up type waste assembly where noted

OPERATION
- Pivot action lever style handle
- Temperature controlled through 180˚ degree arc of handle travel

FLOW
- Flow is limited to 1.5 gpm max (5.7L/min) at 60 psi

CARTRIDGE
- 1225 cartridge design
- Nonmetallic/nonferrous and stainless steel material
- Can accommodate reversed piping and back to back installations

STANDARDS
- Third party certified to WaterSense,® CSA B-125.1, ASME A112.18.1 and all applicable requirements referenced therein including NSF61/9
- Complies with California Proposition 65 and with the Federal Safe Drinking Water Act
- **ADA** for lever handle

WARRANTY
- Lifetime limited warranty against leaks, drips and finish defects to the original consumer purchaser
- 5 year warranty if used in commercial installations

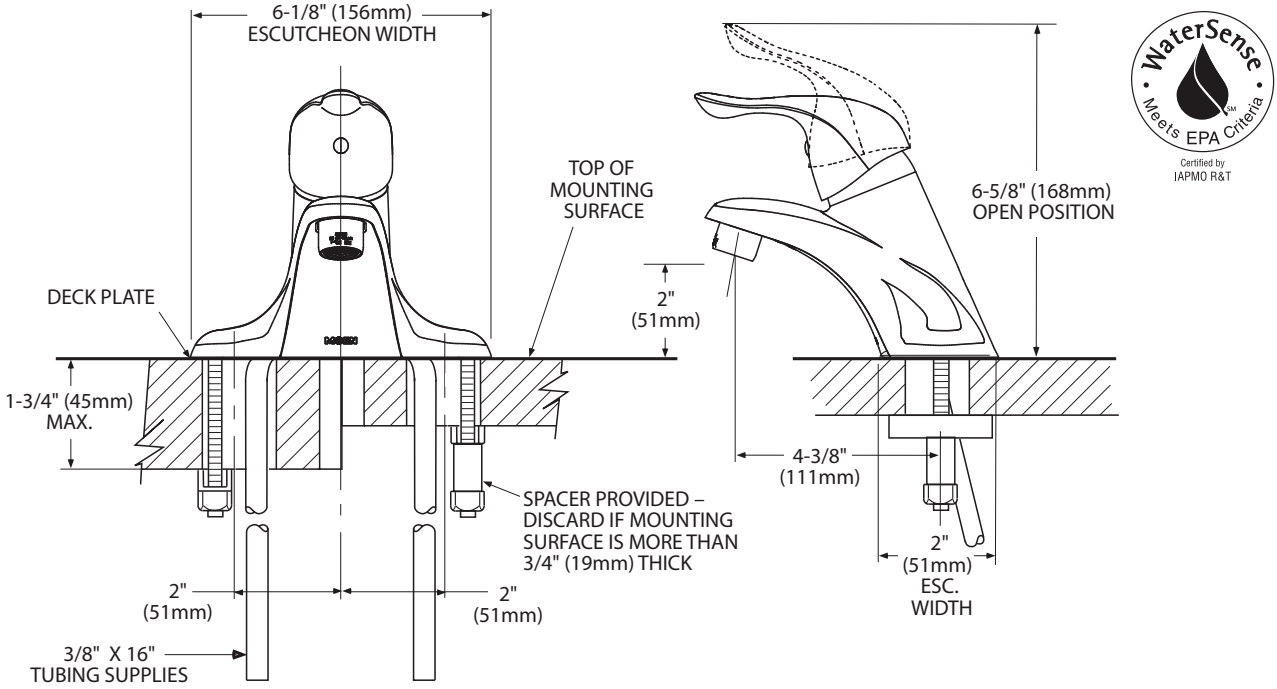

CRITICAL DIMENSIONS

(DO NOT SCALE)

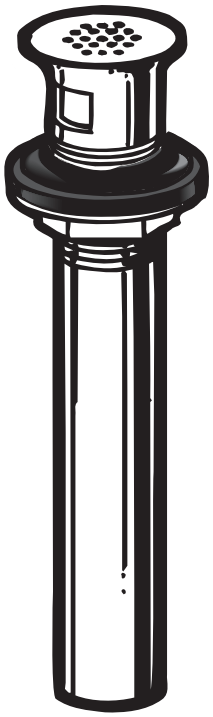

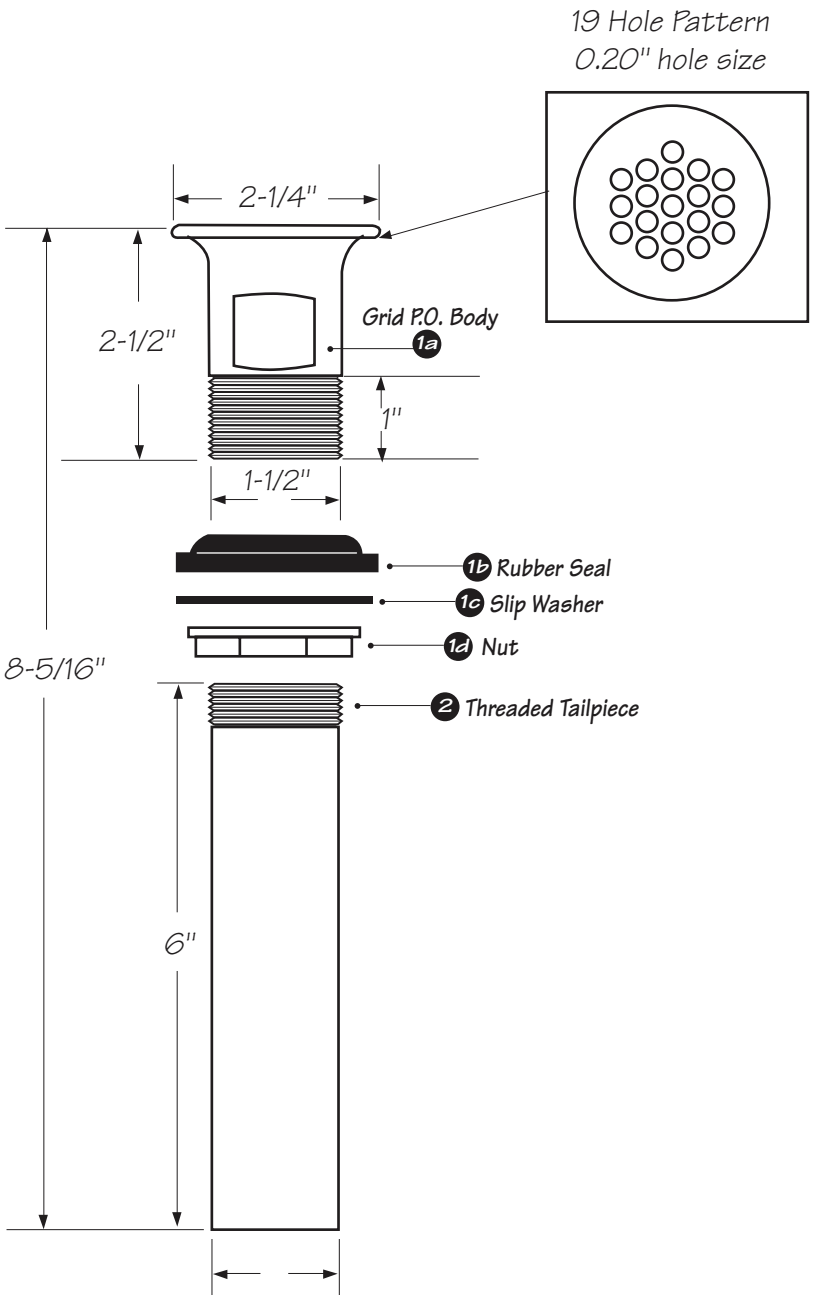

1	370	Grid P.O. Body Assembly
2	4831-6	17 Gauge Tailpiece

OS&B
OAKVILLE STAMPING & BENDING

Date: March 31/00	Approved by:	Drawn by: S.Black
Scale: not to scale		Revision: 01
Product: P.O. Plug		Number: 3700

McGuire Manufacturing Co., Inc.
60 Grandview Court
P.O. Box 746 • Cheshire, CT 06410
203-699-1801 • Fax: 203-699-1813
www.mcguiremfg.com

PRODUCT SPECIFICATION

Part No.
8872, 8902, 8902CNC, 8912, 8912CNC, 8903, 8904

Cast Body P-Trap With or Without Cleanout

Job Name: _____ **Submittal Number:** _____

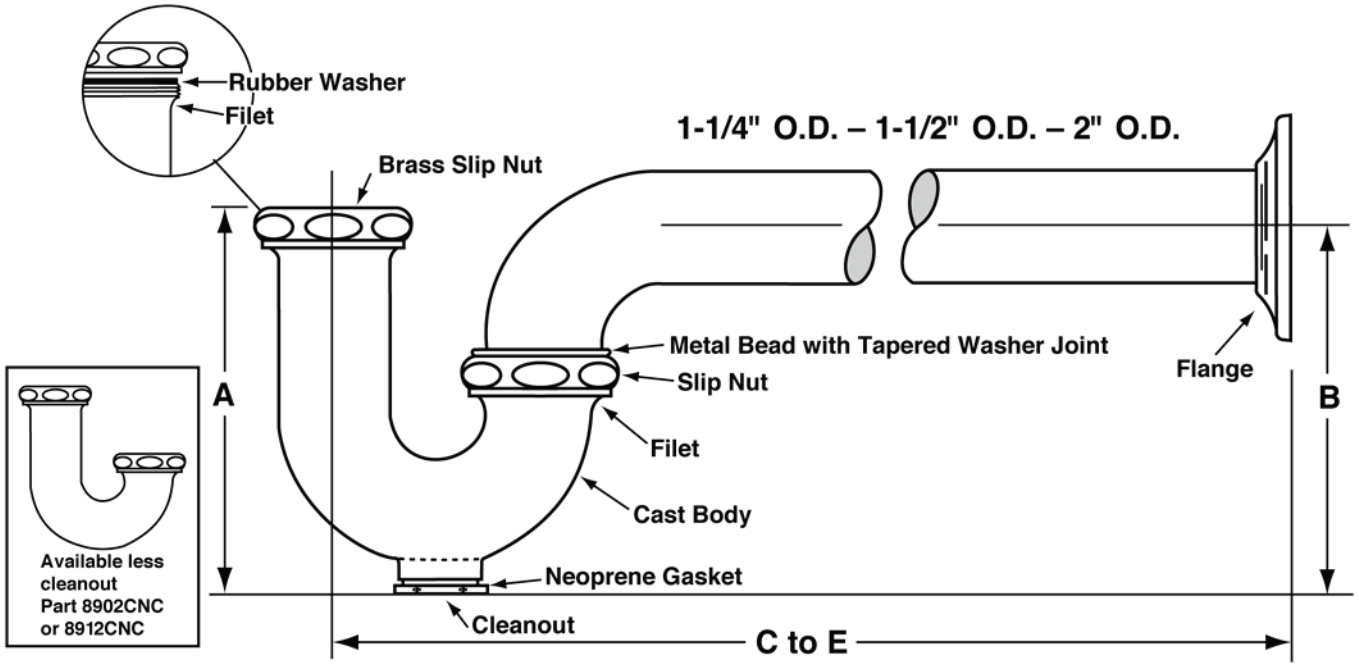

PROFESSIONAL LINE

ROUGHING MEASUREMENTS					
NO.	TRAP DIMENSIONS		A	B	C to E
	INLET	OUTLET			
8872	1-1/4"	1-1/4"	4-1/2"	4-1/4"	11-1/2"
8902	1-1/4"	1-1/2"	5"	5-1/2"	11-1/2"
8902CNC	1-1/4"	1-1/2"	4-5/8"	4-3/4"	11-1/2"
8912	1-1/2"	1-1/2"	5"	5-1/2"	11-1/2"
8912CNC	1-1/2"	1-1/2"	4-5/8"	4-1/8"	11-1/2"
8903	1-1/2"	2"	5"	6"	13-3/4"
8904	2"	2"	5"	6"	13-3/4"

FED SPEC W.W.P. 541
CAST BRASS P TRAP
MINIMUM SEAL 2"

See options and accessories section for details on product variations.

ASME A112.18.1-2011/CSA B125-2.11

Specifications:

P-Trap shall be chrome plated cast brass body (with, without) cleanout, with 17 gauge seamless tubular wall bend, cast brass slip nuts. Reducing washers shall be used with reducing cast brass nut. With (shallow, deep, bell) (steel, brass) or (forged brass with set screw) flange. P-Trap shall be McGuire "Classic" Professional Line (8872C, 8902C, 8912C, 8903, 8904). Trap shall be certified by CSA or other recognized testing authority. P-Trap shall bear manufacturer and testing mark.

© 2015 McGuire Manufacturing Co., Inc. All rights reserved / I Traps / www.mcguiremfg.com

MOEN

Buy it for looks. Buy it for life.®

Illustrated Parts

CHATEAU®
Single-Handle Lavatory Faucet

MODEL		WASTE	FINISH	MODEL		WASTE	FINISH
L4621	Lav 1/2" connections	Metallic	Chrome	L64600	Lav 3/8" flex supplies	None	Chrome
L4621BC	Lav 1/2" connections	Metallic	Brushed Chrome	L64601	Lav 1/2" connections	None	Chrome
L4621P	Lav 1/2" connections	Metallic	Polished Brass	L64621	Lav 1/2" connections	50/50	Chrome
L4625	Lav 3/8" flex supplies	Metallic	Chrome	L64624	Lav 3/8" flex supplies	Metallic	Chrome
L4601	Lav 1/2" connections	None	Chrome	L64625	Lav 3/8" flex supplies	50/50	Chrome
L4605	Lav 1/2" connections	None	Chrome	L64635	Lav 1/2" connections	Metallic	Chrome
L4631BC	Lav 3/8" flex supplies	Metallic	Brushed Chrome	L64620	Lav 1/2" connections	Metallic	Chrome
L4635	Lav 1/2" connections	Metallic	Chrome				
L4621BN	Lav 1/2" connections	Metallic	Brushed Nickel				

■ **Order by Part Number**

There is more than 1 version of this model.
Page down to identify the version you have.

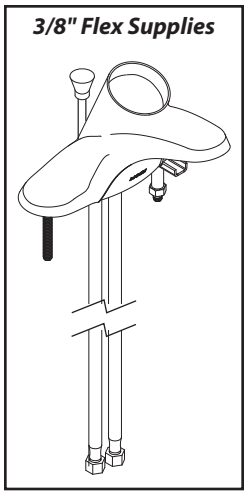

Pop-Up Plug ***(50/50 Waste)*** **12314**

Chrome Only

TO ORDER PARTS LL: 1-800-BUY-MOEN
www.moen.com

MOEN

Buy it for looks. Buy it for life.®

Illustrated Parts

CHATEAU®
Single-Handle Lavatory Faucet

MODEL		WASTE	FINISH	MODEL		WASTE	FINISH
L4621	Lav 1/2" connections	Metallic	Chrome	L64600	Lav 16" supplies	None	Chrome
L4621CP	Lav 1/2" connections	Metallic	Chrome/Pol. Brass	L64601	Lav 1/2" connections	None	Chrome
L4621BC	Lav 1/2" connections	Metallic	Brushed Chrome	L64621	Lav 1/2" connections	50/50	Chrome
L4621P	Lav 1/2" connections	Metallic	Polished Brass	L64624	Lav 16" supplies	Metallic	Chrome
L4625	Lav 16" supplies	Metallic	Chrome	L64625	Lav 16" supplies	50/50	Chrome
L4601	Lav 1/2" connections	None	Chrome	L64635	Lav 1/2" connections	Metallic	Chrome
L4605	Lav 1/2" connections	None	Chrome	L64620	Lav 1/2" connections	Metallic	Chrome
L4635	Lav 1/2" connections	Metallic	Chrome				

■ **Order by Part Number**

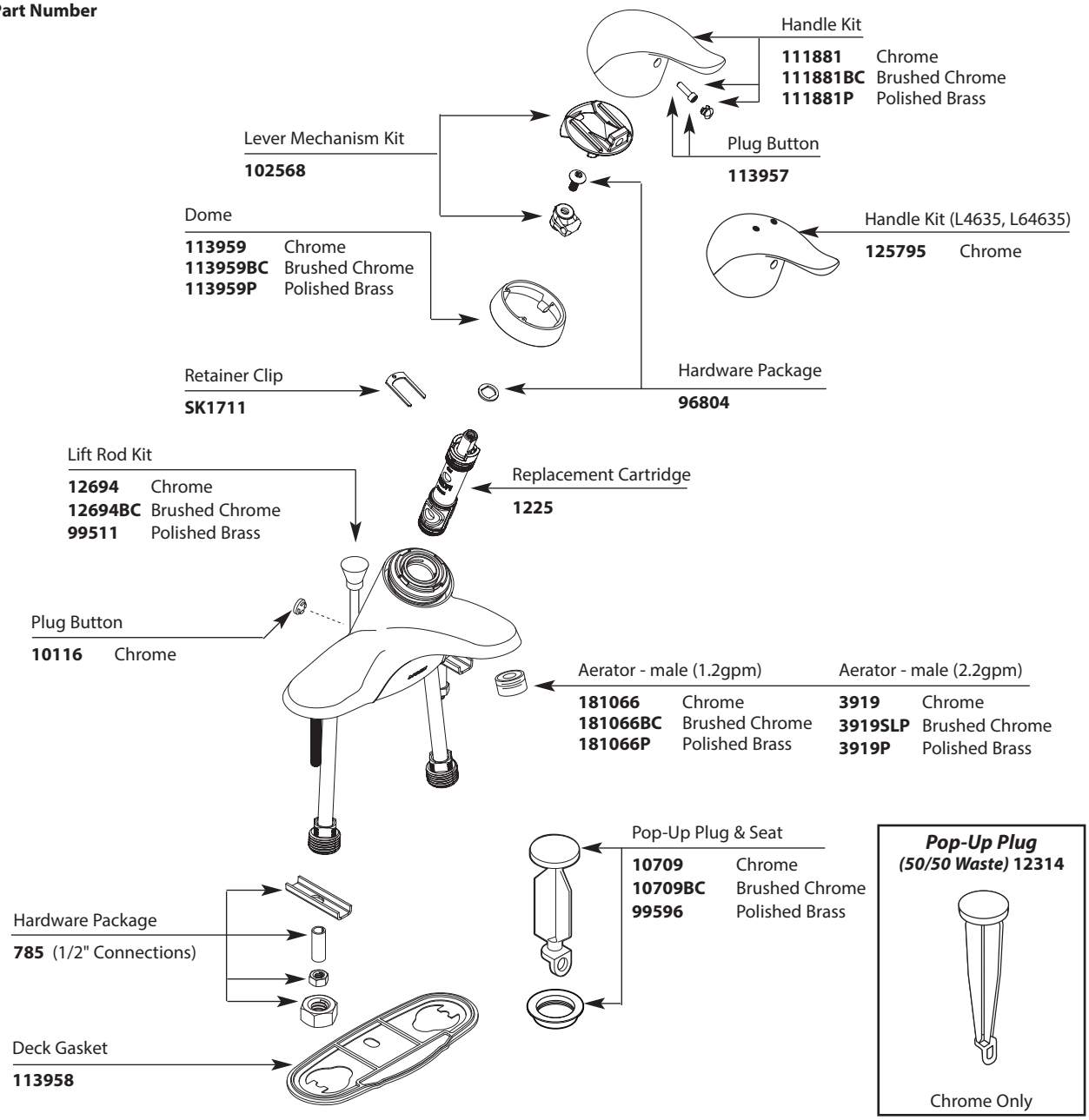

Pop-Up Plug
(50/50 Waste) **12314**

Chrome Only

ON12NOV16 EXP12NOV18 5900026603
Released/02

MOEN

Buy it for looks. Buy it for life.®

Illustrated Parts

CHATEAU®

Single-Handle Lavatory Faucet

MODEL	HANDLE TYPE	FINISH
L4621	Lever	Chrome
L4621CP	Lever	Chrome/Pol. Brass
L4621P	Lever	Polished Brass
L4601	Lever	Chrome
L64601	Lever	Chrome
L4605	Lever	Chrome
L4635	Lever	Chrome

DISCONTINUED STYLE

MODEL	HANDLE TYPE	FINISH
L64621	Lever	Chrome
L64621P	Lever	Polished Brass
L64621W	Lever	Glacier
L64620	Lever	Chrome
L64635	Lever	Chrome

■ Order by Part Name and **Part Number (Bold Face Type)**

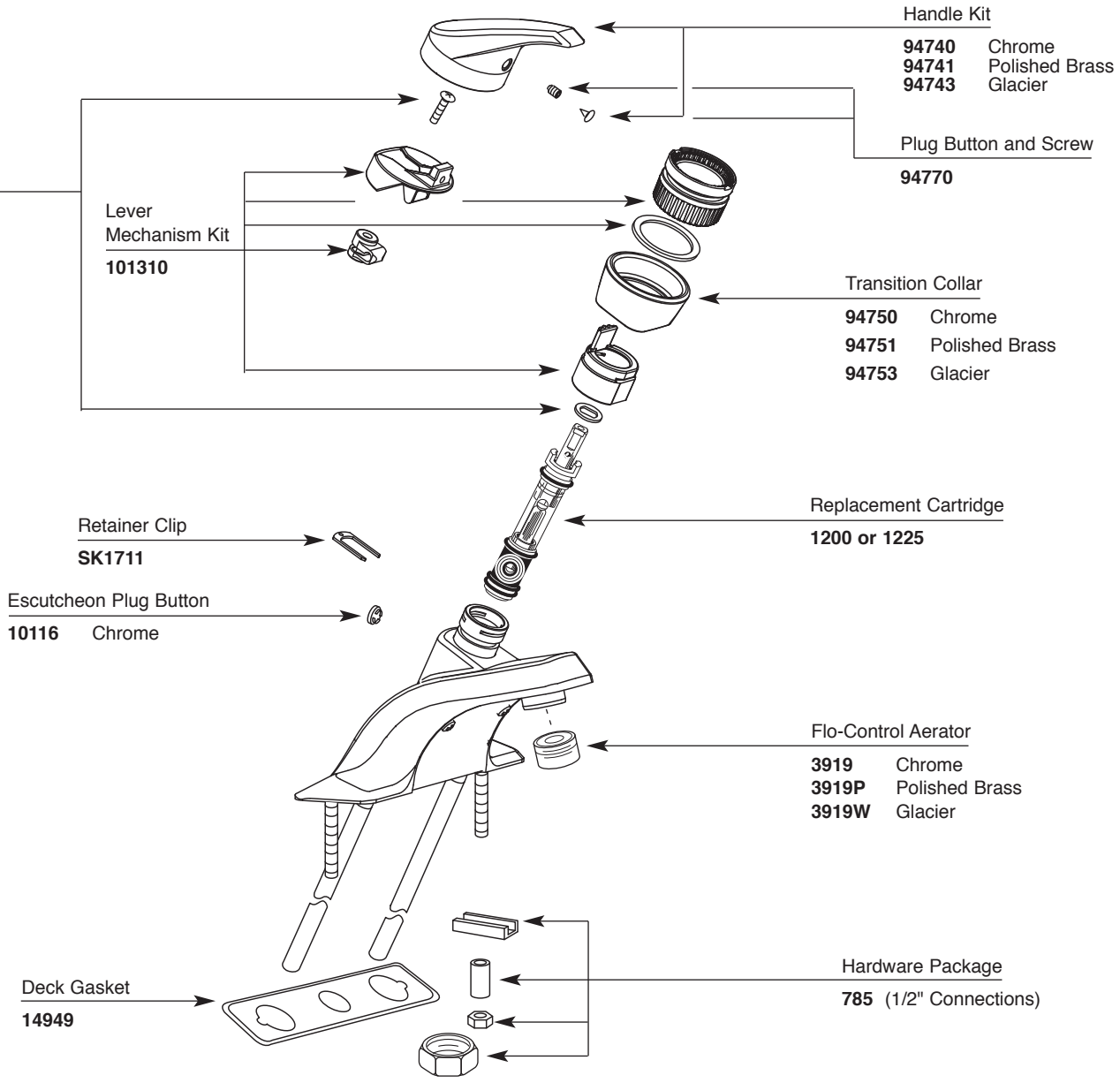

18

Mécanique Nordique
Plumbing
Heating
Ventillation
mecanique.nordique@hotmail.com

1255 Rue J.A.Bombardier
Lévis, Québec
G7A 2P4
Téléphone: 418-496-1109
Télécopieur: 418-496-3803

REVIEWED BY CONTRACTOR
Kudlik Construction Ltd.
NAME: Sandra Rousseau P.Eng
DATE: Sep 06, 2018

IQALUIT WWTP UPGRADE

DRAWING FOR APPROVAL

Ingineer : NUNAMI STANTEC

DRAWING #: AD-018R

Section 23 72 00
Article PART 2
Plans M-801
Application : AIR HANDLING UNIT
Brand : ENGINEE RED AIR
Model : LM8/C/CH RA/MVV
Revised # : 1
Supplyer : ENGINEE RED AIR

Pages incl. 32
Date : **2018-08-06**
By : **Mécanique Nordique Inc.**

STANTEC PROJECT #: 110126045
SUBMITTAL #

This review by Stantec is for general conformance with the design concept of Stantec's design of the:
☐ Architectural ☐ Electrical
☐ Structural ☐ Other
☐ Mechanical

component(s) only and does not mean that Stantec has verified or approves the shop drawing(s). The Contractor remains solely responsible for the shop drawing(s) and this review by Stantec does not relieve the Contractor of the Contractor's responsibility for errors or omissions in the shop drawing(s) or for meeting all requirements of the contract documents. This review does not mean that Stantec approves the detailed design inherent in the shop drawing, responsibility for which shall remain with the Contractor submitting same, nor does this review mean that Stantec accepts any deviation of the shop drawing(s) from the contract documents. The Contractor is responsible for confirming all dimensions and correlating them at the job site, for all construction means, methods and techniques, and for coordination of construction work of all trades, including coordination of all shop drawings.

Stantec

☐ REVIEWED
☑ REVIEWED, AS NOTED
☐ REVISE AND RESUBMIT
☐ NOT REVIEWED

DATE 2018-09-27
BY BORIS HOEFS

DRAWING TRANSMITTAL SHEET

EngA ENGINEERED AIR

JOB NO. **M19012(J203)**

DATE **August 24, 2018**

☑ MONTREAL SALES OFFICE
1450 CUNARD STREET
LAVAL QC
H7S 2B7
(450) 662-1210

CANADIAN HEAD OFFICE
CALGARY AB

CANADIAN FACTORY
CALGARY AB
EDMONTON AB
NEWMARKET ON

OTHER CANADIAN SALES OFFICES
VANCOUVER, EDMONTON, CALGARY, SASKATOON, REGINA, WINNIPEG, LONDON, SUDBURY, TORONTO, HAMILTON, OTTAWA, HALIFAX, MONCTON

CONTRACTOR **MECANIQUE NORDIQUE INC**

ADDRESS **1255 RUE J.A. BOMBARDIER**

LEVIS, QC

G7A 2P4

ENGINEER **STANTEC CONSULTING LTD. (WHITEHORSE)**

JOB NAME **IQALUIT WWTP**

☑ THIS ORDER IS SUBJECT TO APPROVAL. MANUFACTURING IS HELD PENDING RETURN OF ONE APPROVED COPY OF THESE FORMS TO THE INDICATED OFFICE.

☐ THIS ORDER IS NOT SUBJECT TO APPROVAL AND IS BEING MANUFACTURED ACCORDING TO THE ATTACHED FORMS.

COPIES ENCLOSED	DESCRIPTION
1	EngA Submittal Revision Summary
1	EngA Submittal Record
1	EngA Mechanical Drawing M19012M-01-1
1	TwinCity Supply Air Fan Performance Curve and Sound Data
1	TwinCity Exhaust Air Fan Performance Curve and Sound Data
1	EngA TRP Air to Air Heat Exchanger Performance Data Sheet
1	EngA Electrical Data Sheet
1	EngA Field Wiring Diagram M19012F-01-1
1	EngA Unit Sound Data
1	Dafco 2" MERV 8 Filter Cutsheet
1	Dafco 4" MERV 14 Filter Cutsheet
1	Tamco 1000 Cutsheet
1	Johnson A350 Freeze Controller
1	EngA Installation, Operation and Maintenance Manual (LM Series)

PER **MATHIEU HAMEL / HMC**

SUBMITTAL REVISIONS

JOB NAME: IQALUIT WWTP **JOB NO:** M19012(J203)

CUSTOMER: MECANIQUE NORDIQUE INC

ENGINEER: STANTEC CONSULTING LTD. (WHITEHORSE) **REVISION DATE:** Aug 24, 2018

CHANGES AND/OR REVISIONS MADE TO THIS ORDER:

Revision (AUG 24, 2018)

- remove O/A & E/A dampers and add 0.1" wc to ESP.
- change unit handing from LHS to RHS
- change E/A fan discharge orientation.
- change altitude from 245' to 37' on HRA data and fan curve
- update unit TSP, sound calculation, and unit weight.
- specify 2" deep drain pan, AL air to air heat exchanger and frost controller with adjustable setpoint.

EngA ENGINEERED AIR

SUBMITTAL RECORD

JOB NAME: IQALUIT WWTP **JOB NO:** M19012(J203)

CUSTOMER: MECANIQUE NORDIQUE INC **ENGINEER:** STANTEC CONSULTING LTD. (WHITEHORSE)

EngA MODEL: LM8/C/HRA/MV **QTY:** 1 **TAG:** AHU-2

SHIPPING AND APPROVAL INFORMATION

MOUNTING Indoor Base Mounted **ACCESS** As Per Drawing

SHIPPING WEIGHT 7240 lb (3291 kg) **OPERATING WEIGHT** 7140 lb (3245 kg)

NO. OF PIECES 1 Unit

- Intertek cETL approval.
- Unit will be shrink wrapped for transportation.

SUPPLY AIR DATA

AIR FLOW 8,370 CFM (3,950 l/s) **FAN SIZE** (1) 182 BAE-DIDW **TSP** 3.6 in w.c. (896 Pa) **RPM** 2003

MOTOR SIZE 7 1/2 HP (5.6 kW) **TYPE (RPM)** See Below [1] **ESP** 0.86 in w.c. (214 Pa) **BHP** 6.69 BHP (4.99 kW)

- [1] - Super 'E' TEFC (1750) w/ Aegis Ring
- Supply air fan/motor c/w seismic spring vibration isolation, pillow block bearings, extended grease line from far side bearing to access side, OSHA conforming belt guard and shaft grounding ring.
- Unit mounted ABB adjustable speed drive c/w integral DC choke, external load reactors and manual bypass switch. Adjustable speed drive is designed for 4,185 CFM(1,975 l/s) minimum airflow at 30 Hz operating frequency.

EXHAUST AIR DATA

AIR FLOW 7,930 CFM (3,743 l/s) **FAN SIZE** (1) 182 BAE-DIDW **TSP** 2.3 in w.c. (573 Pa) **RPM** 1736

MOTOR SIZE 7 1/2 HP (5.6 kW) **TYPE (RPM)** See Below [1] **ESP** 0.6 in w.c. (149 Pa) **BHP** 4.33 BHP (3.23 kW)

- [1] - Super 'E' TEFC (1750) w/ Aegis Ring
- Exhaust air fan/motor c/w seismic spring vibration isolation, pillow block bearings, extended grease line from far side bearing to access side, OSHA conforming belt guard and shaft grounding ring.
- Unit mounted ABB adjustable speed drive c/w integral DC choke, external load reactors and manual bypass switch. Adjustable speed drive is designed for 3,965 CFM(1,871 l/s) minimum airflow at 30 Hz operating frequency.

AIR OPENING DATA

AIR OPENING	LOCATION	DAMPER TYPE	OPERATION
SUPPLY AIR	Top		
RETURN AIR	See Below [1]		
OUTSIDE AIR	See Below [1]		
EXHAUST AIR	See Below [1]		
HRA FACE & BYPASS AIR	on Air to Air HTX	See Below [2]	Modulating

- [1] - See Mechanical Drawing
- [2] - TAMCO Series 1000FB Low Leakage Aluminum Air-foil Face-Bypass Opposed Blade

CONSTRUCTION DATA

SURFACES CLEANED WITH DEGREASING SOLVENT

UNIT CABINET 16 gauge satin coat galvanized sheet metal c/w 2" (51 mm) 3 lb/ft³ (48 kg/m³) insulation on entire unit casing.

UNIT LINER 22 gauge solid liner throughout but not including unit underside.

UNIT FLOOR 14 gauge galvanized checker plate on entire unit floor with cross reinforce support.

EXTERIOR PAINT Two component Epoxy in Aluminum Gray color on all exterior surface but not including unit underside.

AIRSIDE DOOR Filter access - hinged c/w lever type door handles

All other access - hinged c/w lever type door handles and double pane glass window.

SERVICE DOOR All access - hinged c/w lever type door handle

EngA ENGINEERED AIR

SUBMITTAL RECORD

JOB NAME: IQALUIT WWTP **JOB NO:** M19012(J203)

EngA MODEL: LM8/C/HRA/MV **QTY:** 1 **TAG:** AHU-2

CONSTRUCTION DATA (CONTINUED)

DRAIN PAN 14 gauge galvanized x-plate 2" deep drain pan c/w floor drain connection through base frame on HRA supply entering, exhaust entering & leaving sections.

- Plate HX : (1) 40"(1016 mm) x 40"(1016 mm) x 48"(1219 mm) wide air to air Aluminum heat exchanger (See attached performance data).

ELECTRICAL DATA

CIRCUIT NO	POWER SUPPLY	MINIMUM CIRCUIT AMPACITY	MAXIMUM FUSE(D.E.)	MAXIMUM BREAKER
1	575 / 3 / 60	20.5 AMPS	25 AMPS	25 AMPS
2	120 / 1 / 60	12.0 AMPS	15 AMPS	15 AMPS

- See Electrical Data Sheet for details.
- Unit mounted non fused disconnect switch.
- MCA is based on '9' rated adjustable speed drive amps and installed motor amps is not used .
- (2) marine lights each has an on/off switch - 120V/1PH/ 60HZ power supply by others.

SUMMER FILTER SECTION DATA - Side Loaded

FILTER TYPE Dafco Pleated Filter with MERV 13 rating c/w Metal Frame

QTY/SIZE 2 - 25 x 16 x 2" (635 x 406 x 51 mm) **QTY/SIZE** 2 - 25 x 20 x 2" (635 x 508 x 51 mm)

QTY/SIZE 1 - 20 x 16 x 2" (508 x 406 x 51 mm) **QTY/SIZE** 1 - 20 x 20 x 2" (508 x 508 x 51 mm)

TOTAL GROSS AREA 17.50 SQ.FT. (1.63 SQ. MTRS) **FACE VELOCITY** 478 FPM (2.43 m/s)

- Filters may be shipped loose or mounted in the tracks
- 1 spare set of filters (filter metal frame not included) - shipped loose
- Dwyer series 2000 magnehelic gauge 0-1" wc across summer filter section
- Galvanized steel filter frame and track.

WINTER FILTER SECTION DATA - Side Loaded

FILTER TYPE Pleated Filter with MERV 8 rating

QTY/SIZE 2 - 25 x 16 x 2" (635 x 406 x 51 mm) **QTY/SIZE** 2 - 25 x 20 x 2" (635 x 508 x 51 mm)

QTY/SIZE 1 - 20 x 16 x 2" (508 x 406 x 51 mm) **QTY/SIZE** 1 - 20 x 20 x 2" (508 x 508 x 51 mm)

TOTAL GROSS AREA 17.50 SQ.FT. (1.63 SQ. MTRS) **FACE VELOCITY** 478 FPM (2.43 m/s)

- Filters may be shipped loose or mounted in the tracks
- Dwyer series 2000 magnehelic gauge 0-1" wc across winter filter section

PROVIDE GALVANIZED MOUNTING RACK

EXHAUST FILTER SECTION DATA - Side Loaded

FILTER TYPE Pleated Filter with MERV 8 rating

QTY/SIZE 2 - 25 x 16 x 2" (635 x 406 x 51 mm) **QTY/SIZE** 2 - 25 x 20 x 2" (635 x 508 x 51 mm)

QTY/SIZE 1 - 20 x 16 x 2" (508 x 406 x 51 mm) **QTY/SIZE** 1 - 20 x 20 x 2" (508 x 508 x 51 mm)

TOTAL GROSS AREA 17.50 SQ.FT. (1.63 SQ. MTRS) **FACE VELOCITY** 453 FPM (2.30 m/s) @ 7930 CFM (3743 l/s)

- Filters may be shipped loose or mounted in the tracks
- 1 spare set of filters - shipped loose
- Dwyer series 2000 magnehelic gauge 0-1" wc across exhaust filter section

PROVIDE GALVANIZED MOUNTING RACK

HYDRONIC PRE-HEAT COIL DATA

COIL SIZE 30 (762) x 60 (1524) x 1R x 14 FPI **VELOCITY** 599 FPM (3.05 m/s)

CAPACITY 504,520 Btuh (147.8 kW) **AIR P.D.** 0.17 in.wc. (42 Pa)

ENTERING AIR DB -41.8°F (-41.0°C) **LEAVING AIR DB** 14.0°F (-10.0°C)

FLUID MEDIUM 50% Propylene-Glycol **CONN. SIZE (In & Out)** 2 in (51 mm) **FLUID P.D.** 3.4 FT (10 kPa)

FLUID FLOW RATE 37.5 US.GPM (2.4 l/s) **ENTERING FLUID TEMP** 180°F (82.2°C) **LVG. FLUID TEMP** 150.1°F (65.6°C)

JOB NAME: IQALUIT WWTP **JOB NO:** M19012(J203)

EngA MODEL: LM8/C/HRA/MV **QTY:** 1 **TAG:** AHU-2

HYDRONIC PRE-HEAT COIL DATA (CONTINUED)

- Heating coil c/w threaded connections.
- Freeze protection by others.
- Hydronic system of this unit is designed for maximum 150 psig. The total fluid P.D. shown above includes the pressure drop of all unit mounted components in the hydronic system.

HYDRONIC HEATING COIL DATA

COIL SIZE	36 (914) x 60 (1524) x 1R x 6 FPI			**VELOCITY**	545 FPM (2.77 m/s)
CAPACITY	189,200 Btuh (55.4 kW)			**AIR P.D.**	0.08 in.wc. (20 Pa)
ENTERING AIR DB	36.6°F (2.6°C)			**LEAVING AIR DB**	57.5°F (14.2°C)
FLUID MEDIUM	50% Propylene-Glycol	**CONN. SIZE (In & Out)**	1 1/4 in (32 mm)	**FLUID P.D.**	2.8 FT (8 kPa)
FLUID FLOW RATE	14.1 US.GPM (0.9 l/s)	**ENTERING FLUID TEMP**	180°F (82.2°C)	**LVG. FLUID TEMP**	150.2°F (65.7°C)

- Heating coil c/w threaded connections.
- Low limit auto bypass; set @ 40°F (4.4°C).
- Hydronic system of this unit is designed for maximum 150 psig. The total fluid P.D. shown above includes the pressure drop of all unit mounted components in the hydronic system.

SHIPPED LOOSE ITEMS (See filter sections for filters and spare filters)

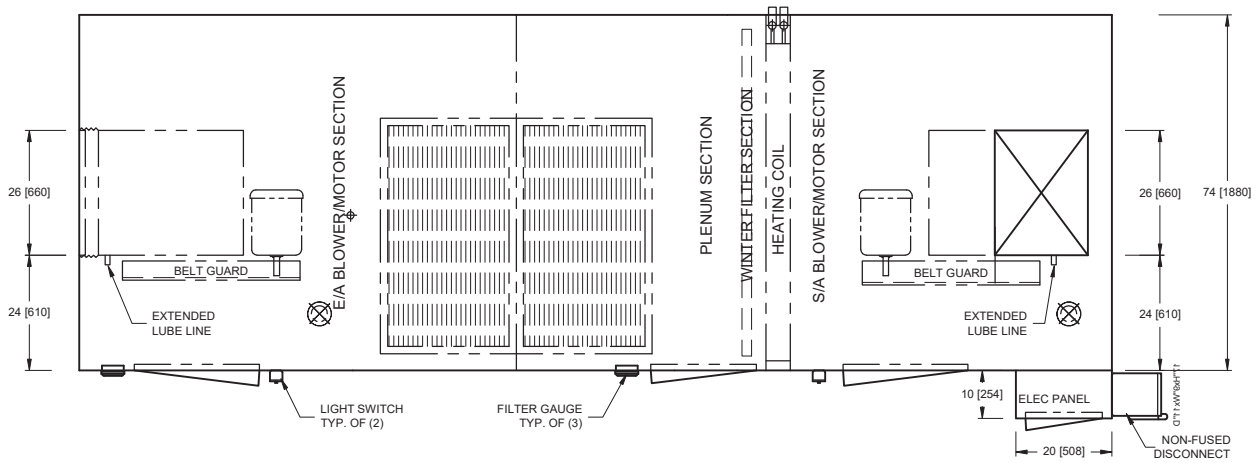

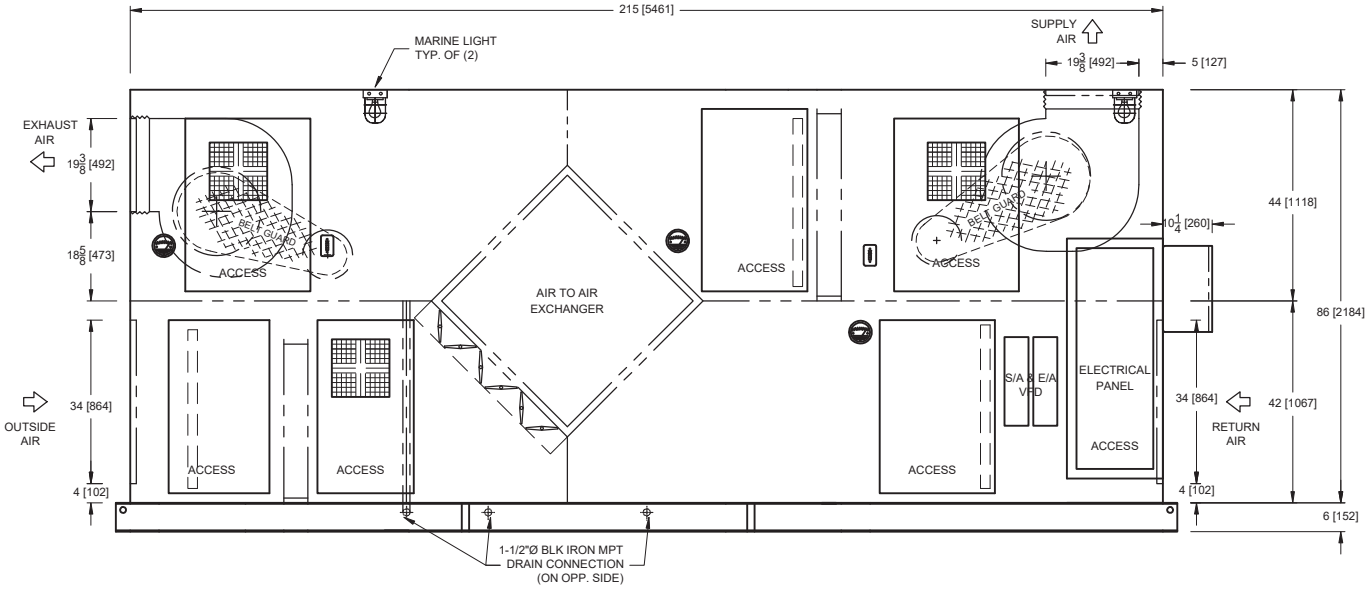

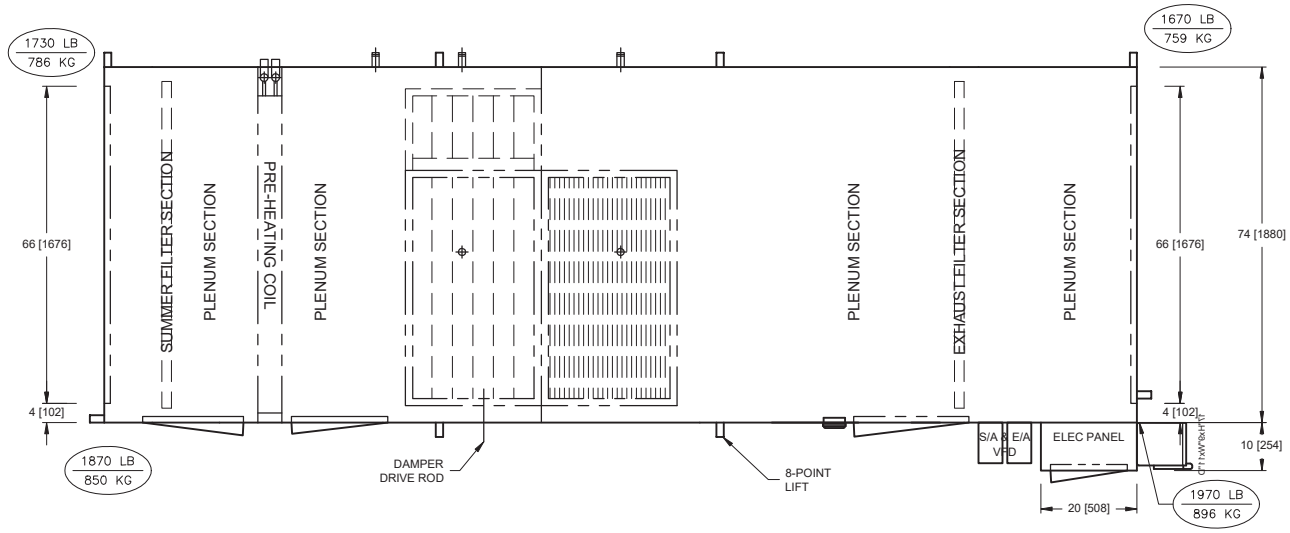

ProUnit

DOOR SIZES AND INTERNAL COMPONENTS ARE APPROX. VALUES. DIMENSIONS SHOWN IN INCHES & [MM] UNLESS OTHERWISE NOTED.

M19012 (J203)

TAG: AHU-2

LM8/C/HRA/MV

AIR HANDLING UNIT

EngA®

ENGINEERED AIR®

REVISIONS: AUG 22, 2018			
DATE: JUN 14 2018	DRWN BY: HMC	CHKD BY: KWL	DRWG NO.: M19012M-01-1

Job Name:

Fans & Blowers
Twin City

Customer:
Job ID: M19012
Date: August 22, 2018

Tag: AHU-2 SA

Fan information

Size/Model 182/BAE-DW
Volumetric Flow (m³/sec) 3.95
SP (Pa) 897

Class I
Speed (RPM) 2003
Max Speed . . 2248 RPM @ 21 °C
Power (KW) 4.99

Outlet Vel (m/sec) 12.32
Density (kg/m³) 1.1998
FEG FEG90

Adjusted for Altitude: 11 m

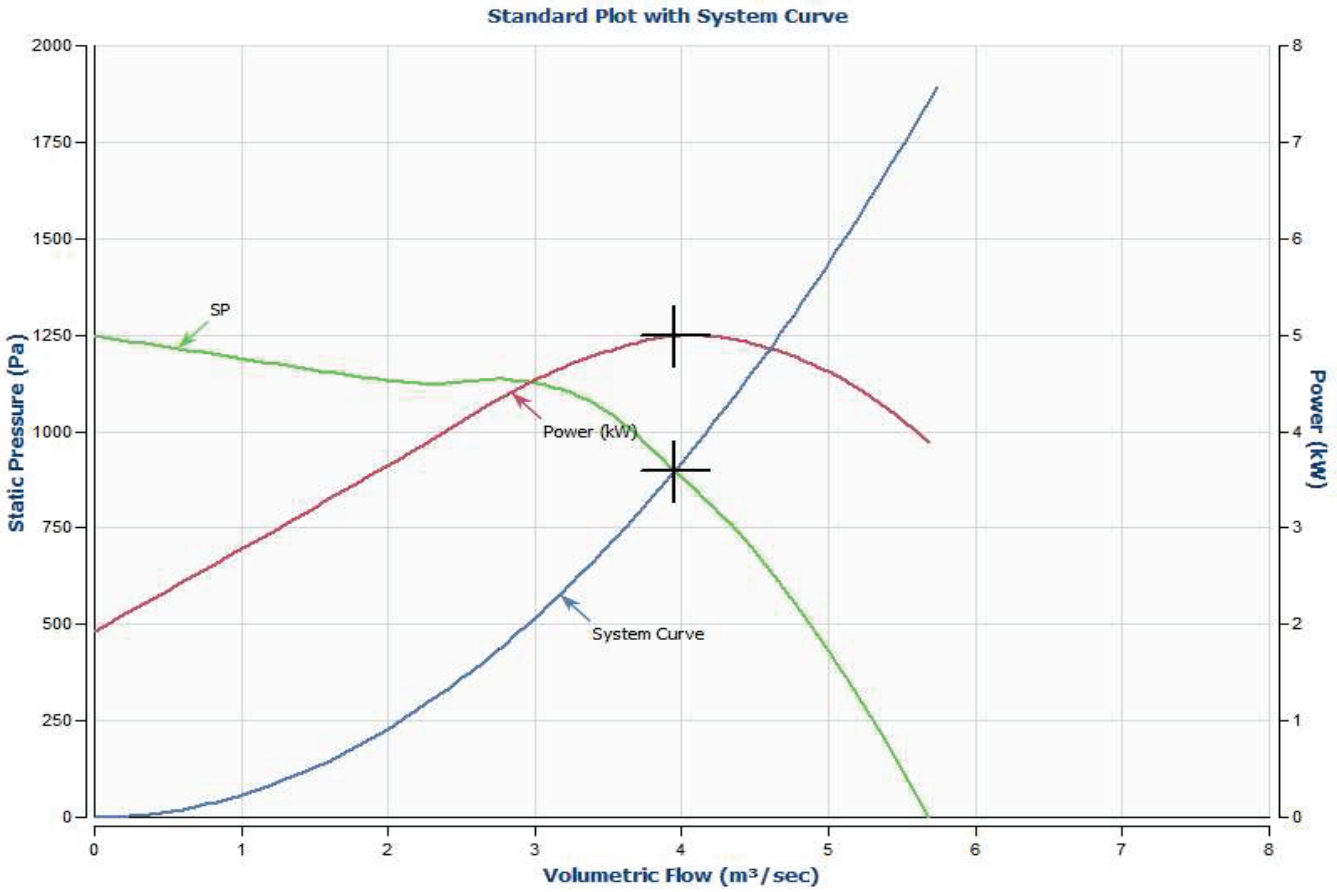

Sound Power Ea.	Octave Bands	1	2	3	4	5	6	7	8	LwA	dBA
	Inlet dB	91	91	94	93	86	81	78	74	93	79
	Outlet dB	98	96	94	91	86	82	79	75	93	78

LwA: The overall (single value) fan sound power level in dB re. 10^{-12} Watts, 'A' weighted.
dBA: Estimated sound pressure level (re:0.0002 microbar) based on a single ducted installation at 5 ft., using a directivity factor of 1.

Job Name:

Fans & Blowers
Twin City

Customer:
Job ID: M19012
Date: August 23, 2018

Tag: AHU-2 EA

Fan information

Size/Model 182/BAE-DW
Volumetric Flow (m³/sec) . . . 3.742
SP (Pa) 573

Class I
Speed (RPM) 1736
Max Speed . . 2248 RPM @ 21 °C
Power (KW) 3.23

Outlet Vel (m/sec) 11.68
Density (kg/m³) 1.1998
FEG FEG90

Adjusted for Altitude: 11 m

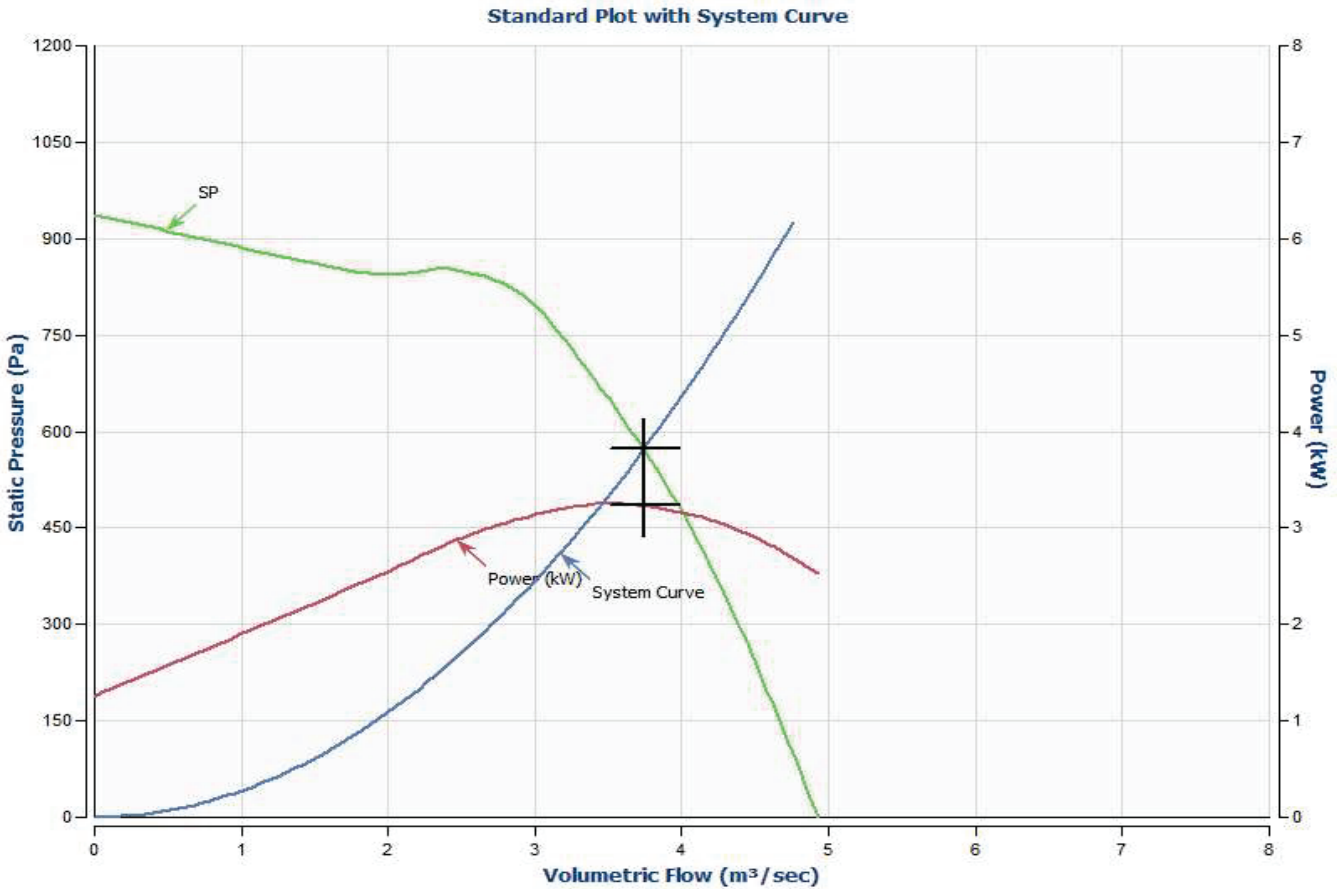

Sound Power Ea.	Octave Bands	1	2	3	4	5	6	7	8	LwA	dBA
	Inlet dB	88	89	90	89	81	78	74	70	89	74
	Outlet dB	94	93	92	85	83	80	76	70	89	75

LwA: The overall (single value) fan sound power level in dB re. 10^{-12} Watts, 'A' weighted.
dBA: Estimated sound pressure level (re:0.0002 microbar) based on a single ducted installation at 5 ft., using a directivity factor of 1.

TRP

EngA TRP V5.3

AIR TO AIR HEAT EXCHANGERS

EngA ENGINEERED AIR

1401 Hastings Cresent SE Calgary, AB, Canada, T2G 4C8

Phone: (403)287-2590 Fax:(403)243-5059

Job #:	M19012 (J203)	Tag:	AHU-2	Job Name:	IQALUIT WWTP
Model:	LM8/C/HRA/MV			Contractor:	
Job Site:	Montreal, QC	Elevation:	37 ft.	Engineer:	
Date:	08-23-18			Sales Rep:	

SUPPLY AIR	HEATING	COOLING
Temperature Efficiency	57 %	60 %
Air Flow	8370 SCFM	8370 SCFM
Entering Air DB Temperature	14 °F	80 °F
Entering RH or WB temperature	15 %	67 °F
Leaving Air Temperature	36.7 °F	77 °F (DB) 65.9 °F (WB)
Pressure Drop	1.01 "w.c.	1.11 "w.c.
Energy Recovery	202.44 Mbh	26.2 Mbh
EXHAUST AIR	**HEATING**	**COOLING**
Air Flow	7930 SCFM	7930 SCFM
Entering Air DB Temperature	54 °F	75 °F
Entering RH or WB temperature	25 %	50 %
Leaving Air Temperature	30.1 °F	78.1 °F
Pressure Drop	0.91 "w.c.	1.02 "w.c.

MODEL: AS4048

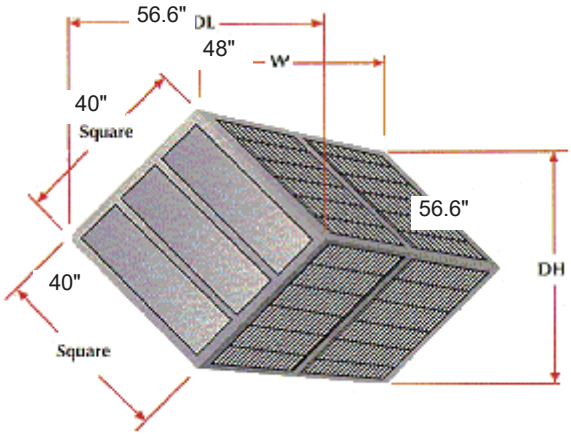

Approx. Weight (lbs): 470

FROST CONTROL DATA

Frost Threshold Temperature N/A

Provide description of testing standards used to determine total energy recovery, cross-contamination %, mold and bacteria resistance, and flame spread.

Provide description of cleaning process for the core for maintenance purposes.

All Rights Reserved

EngA® ENGINEERED AIR®

ELECTRICAL DATA

JOB NAME: IQALUIT WWTP **JOB NO:** M19012(J203)

EngA MODEL: LM8/C/HRA/MV **QTY:** 1 **TAG:** AHU-2

Circuit No	Power Supply	Minimum Circuit Ampacity	Terminal Block to Accept	Maximum Fuse (Dual Element)	Maximum Breaker
1	575 / 3 / 60	20.5 AMPS	10 Awg	25 AMPS	25 AMPS
2	120 / 1 / 60	12.0 AMPS	14 Awg	15 AMPS	15 AMPS

Components	Circuit No	Model	Minimum Conductor Size	Ampacity FLA / LRA
Supply Fan Motor	1	Super 'E' TEFC (1750) w/ Aegis Ring 7 1/2 HP	14 Awg	7.6
Return Fan Motor	1	Super 'E' TEFC (1750) w/ Aegis Ring 7 1/2 HP	14 Awg	7.6
Marine Light Circuit	2		14 Awg	12.0
Main Control Xfmr	1		14 Awg	.3

UNIT CONTROL PANEL(S) SHORT CIRCUIT CURRENT RATING (SCCR)
Short circuit current 5 kA rms symmetrical, 575 V maximum

WIRING DRAWING LEGEND					
APS	Air Proving Switch	DM	Damper Motor	NFD	Non Fused Disconnect
ASF	Auto Fan Switch	FR	Fan Relay	OL	Thermal Overload
AUX	Auxiliary Contact	GND	Ground	PS	Pressure Sensor
BM	Burner Motor	GV	Gas Valve	PV	Pilot Gas Valve
C	Contactor	HL	High Limit	R	Relay
CCH	Compressor Crankcase Heater	HPC	High Pressure Control	RevHL	Reverse Airflow High Limit
CFC	Condenser Fan Control	HR	Heating Relay	TB	Terminal Block
CLC	Compressor Loading Control	IGN	Ignition Control	TDF	Time Delay Fuse
CPM	Compressor Protection Module	ITP	Internal Thermo Protection	TDR	Time Delay Relay
CR	Cooling Relay	LPC	Low Pressure Control	TS	Temperature Sensor
CS	Current Sensor	M	Motor	VFD	Variable Frequency Drive
DHSS	Draft Hood Spill Switch	MV	Main Gas Valve	XFMR	Transformer

(Continued on second page)

DATE: 24-AUG-2018 **SUBMITTED BY:** MATHIEU HAMEL / HMC

EngA® ENGINEERED AIR®

ELECTRICAL DATA

JOB NAME: IQALUIT WWTP **JOB NO:** M19012(J203)

EngA MODEL: LM8/C/HRA/MV **QTY:** 1 **TAG:** AHU-2

UNIT FUNCTION

Unit mounted non fused disconnect switch 'on', service switch 'on', fire alarm contact (by others) 'closed' (jumper if not required), duct high pressure limit (by others) 'closed', both S/A & E/A VFD fault contacts (by others) 'closed', unit is ready for operation.

Unit on/off contact (by others) 'closed', O/A & E/A dampers (by others) are enabled. After O/A & E/A dampers proven open, blowers start and run continuously down to a minimum airflow of 50% of blower air flow(30 hz VFD speed). Blower/Motor VFD speeds (see note 1) are controlled by 0-10VDC signal (by others).

The Johnson frost controller A350 will modulate HRA face & bypass dampers to maintain the heat exchanger exhaust air leaving temperature above 34°F (1.1°C) (adjustable). If economizer contact 'closed', HRA Face & BP dampers open to 100% BP position.

Auto bypass low limit will stop unit operation if the discharge air temperature falls below 40°F (4.4°C).

If non fused disconnect switch 'open', or service switch 'open', or fire alarm contact 'open', or duct high pressure limit 'open', or S/A VFD fault contact 'open', or E/A VFD fault contact 'open', or unit on/off contact 'open', O/A & E/A dampers are disabled, blowers stop, unit is off.

Note 1 - VFD has an external bypass switch, when activated blower and motor will operate at full speed.
Note 2 - Refer to manuals shipped with unit for a more detailed explanation of maintenance, component(s) and/or controller(s).

DATE: 24-AUG-2018 **SUBMITTED BY:** MATHIEU HAMEL / HMC

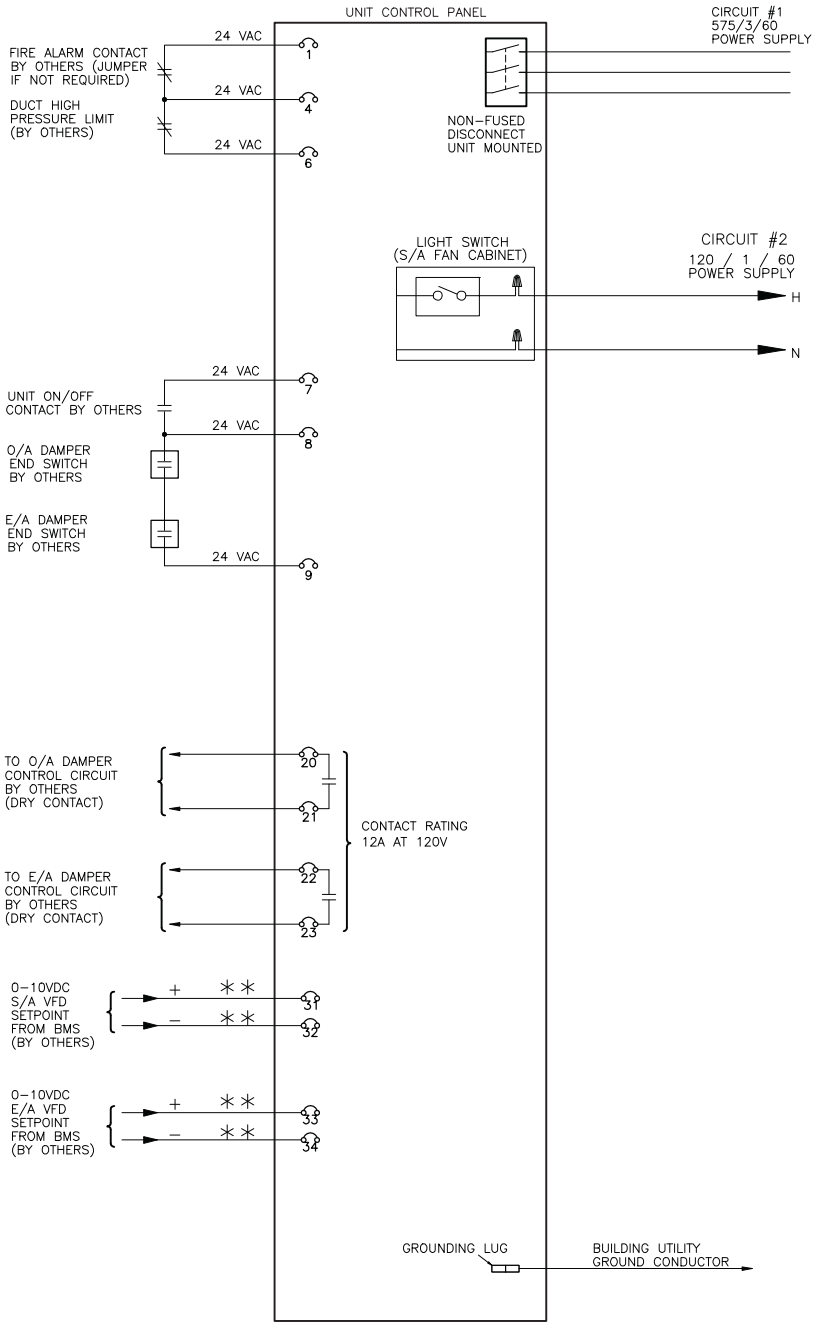

MAXIMUM CONTROL CIRCUIT AMPACITY 6.3 AMPS AT 24 VAC

** SHIELDED WIRE IS REQUIRED WITH BMS ANALOG SIGNALS.
TAPE THE GROUND WIRE AND SHIELD TO PREVENT GROUNDING.
TAPE THE ENDS OF ALL UNUSED WIRES.

1. FIELD WIRING VOLTAGE DROP NOT TO EXCEED 10%.
2. ALL WIRING SHOWN SHALL BE COMPLETED BY INSTALLER.
3. ALL WIRING TO COMPLY WITH THE CANADIAN ELECTRICAL CODE.

EngA® ENGINEERED AIR®	TAG: AHU-2			FIELD WIRING DIAGRAM LM SERIES
	REVISION: AUG 22, 2018	DRN.BY: HMC	DWG.NO:	M19012F-01-1
	DATE: MJUN 14, 2018	CHKD.BY: KWL		

EngA ENGINEERED AIR

Unit Sound Data

August 23, 2018

JOB NAME: M19012 (J203)

JOB NUMBER:

INSTALLATION:

UNIT TAG: AHU-2

UNIT CONSTRUCTION:

CASING METAL:	16 ga	INSULATION DEPTH:	2 in
LINER METAL:	22 Thru-out	INSULATION DENSITY	3.0 lbs /cu.ft.

SOUND SOURCE DATA:

Blower	Make	Type	Size	Qty	Total CFM	TSP ("wc)	Speed (rpm)	BHP (hp)		Sound Power Data 63	125	250	500	1000	2000	4000	8000
S/A	TwinCity	BAE DIDW	182	1	8370	3.6	2003	6.69	Inlet	91	91	94	93	86	81	78	74
									Outlet	98	96	94	91	86	82	79	75
E/A	TwinCity	BAE DIDW	182	1	7930	2.3	1736	4.33	Inlet	88	89	90	89	81	78	74	70
									Outlet	94	93	92	85	83	80	76	70

UNIT S/A OUTLET:

CENTER FREQUENCY (Hz)	63	125	250	500	1000	2000	4000	8000	A-weighted
SOUND POWER Lw (dB)	98.0	96.0	94.0	91.0	86.0	82.0	79.0	75.0	92.5

UNIT O/A INLET:

CENTER FREQUENCY (Hz)	63	125	250	500	1000	2000	4000	8000	A-weighted
SOUND POWER Lw (dB)	86.4	91.0	94.0	92.4	85.4	80.4	75.8	71.8	92.4

UNIT E/A OUTLET:

CENTER FREQUENCY (Hz)	63	125	250	500	1000	2000	4000	8000	A-weighted
SOUND POWER Lw (dB)	94.0	93.0	92.0	85.0	83.0	80.0	76.0	70.0	89.0

UNIT R/A INLET:

CENTER FREQUENCY (Hz)	63	125	250	500	1000	2000	4000	8000	A-weighted
SOUND POWER Lw (dB)	83.4	89.0	90.0	88.4	80.4	77.4	71.9	67.9	88.4

UNIT CASING *:

CENTER FREQUENCY (Hz)	63	125	250	500	1000	2000	4000	8000	A-weighted
SOUND POWER Lw (dB)	86.0	81.8	78.5	71.3	59.3	52.5	49.2	44.9	73.4

* Unit casing sound includes casing breakout and sound sources outside the air streams only. Sound from openings are not included in unit casing sound.

Note:

DAFCO FILTRATION GROUP®

SERIES 400 PLEATED AIR FILTER

MERV 10

AEROSTAR®

- *High Capacity achieves MERV 10*
- *Standard Capacity achieves MERV 8*
- *Extremely low resistance to air-flow minimizes energy costs*
- *100% synthetic media is moisture resistant and will not promote biological growth*
- *Advanced media does not rely on electrostatic charge for efficiency*

100% Recycled Paperboard®
MINIMUM 35% POST CONSUMER CONTENT

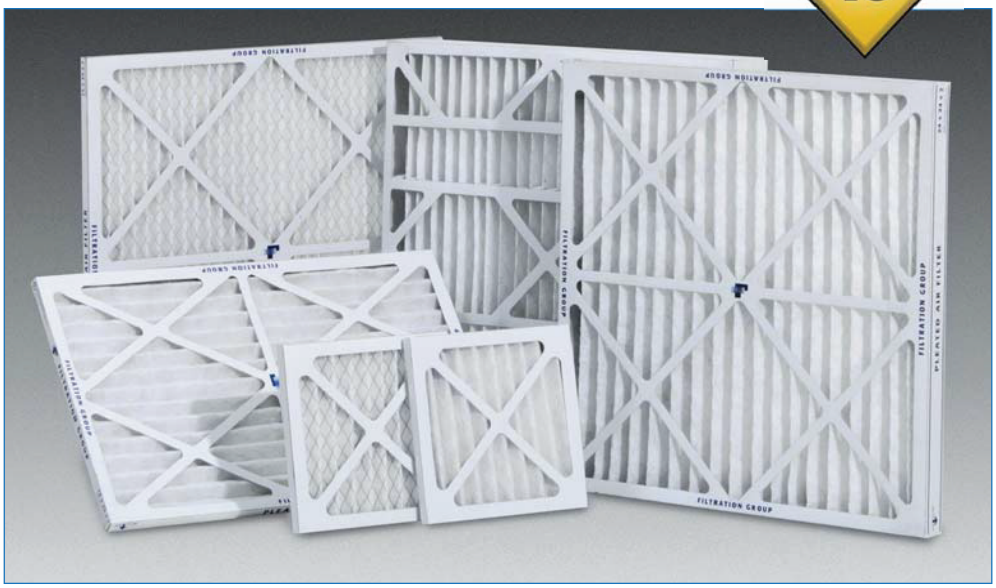

DESCRIPTION

The Aerostar® Series 400 pleated air filter utilizes a state-of-the-art 100% synthetic media to achieve exceptionally high levels of efficiency with the lowest resistance to air flow available. The media is laminated to an expanded metal grid on the air exiting side to provide exceptional strength during installation. The media support grid prevents fluttering and maintains pleat uniformity for optimum performance. The filter pack is enclosed in a heavy-duty, moisture resistant die-cut frame that will not warp, crack, or distort under normal operating conditions.

The 1" and 2" depth filters handle air velocities up to 500 fpm; 4" depth filters up to 625 fpm. Aerostar Series 400 pleats are recommended for most commercial and industrial applications to protect people and equipment, or as pre-filters to even higher efficiency air filters.

BENEFITS

The improved Aerostar Series 400 pleated filter has independent test lab data confirming exceptionally high levels of airborne particle removal with the lowest resistance to air flow available.

- Series 400 HC model achieves MERV 10
- Series 400 SC model achieves MERV 8
- Series 400 HC model initial resistance of 0.17" w.g. @ 500 fpm
- Series 400 SC model initial resistance of 0.19" w.g. @ 500 fpm
- Higher levels of filtration make the Series 400 extremely effective removing many airborne irritants such as pollens, molds, dander, and dust.
- Low resistance improves air flow and can greatly reduce energy costs
- Series 400 pleat filters can be a valuable tool in achieving points for USGBC - LEED certification projects.

APPLICATIONS

Aerostar Series 400 pleated air filters are designed for use in commercial buildings, hotels, industrial filtration, airports, school and universities, or any application desiring higher levels of air filtration to protect occupants from airborne irritants and protect cooling coils, ductwork, and other components of the HVAC system from dust and dirt.

CANADA GREEN BUILDING COUNCIL • CONSEIL DU BÂTIMENT DURABLE DU CANADA • MEMBER

SERIES 400 PLEATED AIR FILTER

AEROSTAR®

DIMENSIONS AND PERFORMANCE DATA

FILTER DEPTH	MEDIUM VELOCITY	INITIAL RESISTANCE MEDIUM (" w.g.) STD CAP	HIGH CAP	HIGH VELOCITY	INITIAL RESISTANCE HIGH (" w.g.) STD CAP	HIGH CAP	FINAL RESISTANCE (ALL FILTERS)
1"	375	0.18	0.15	500	0.38	0.30	1.0
2"	375	0.13	0.11	**500**	**0.19**	**0.17**	1.0
4"	500	0.12	0.11	625	0.18	0.17	1.0

APPLICATION PARAMETERS

Recommended Temperature: 200° F
Recommended Final Resistance: 1.0" w.g.
Frame: 100% Recycled Paperboard

PART NUMBER STD CAP	PART NUMBER HIGH CAP	NOMINAL SIZE*	CFM CAPACITIES MEDIUM	CFM CAPACITIES HIGH
10403	10476	8 x 16 x 1	325	450
10404	10477	10 x 10 x 1	250	350
10364	10436	10 x 20 x 1	525	700
10405	10478	10 x 24 x 1	625	825
10406	10479	10 x 25 x 1	650	850
10365	10437	12 x 12 x 1	375	500
10407	10480	12 x 16 x 1	500	650
10366	10438	12 x 20 x 1	625	825
10367	10439	12 x 24 x 1	750	1000
10368	10440	12 x 25 x 1	775	1025
10369	10441	14 x 20 x 1	725	975
10408	10481	14 x 24 x 1	875	1150
10370	10442	14 x 25 x 1	900	1200
10371	10443	15 x 20 x 1	775	1050
10409	10482	15 x 25 x 1	975	1300
10410	10483	16 x 16 x 1	650	875
10372	10444	16 x 20 x 1	825	1100
10411	10484	16 x 24 x 1	1000	1325
10373	10445	16 x 25 x 1	1050	1400
10412	10485	18 x 18 x 1	850	1125
10413	10486	18 x 20 x 1	925	1250
10414	10487	18 x 22 x 1	1025	1375
10415	10488	18 x 24 x 1	1125	1500
10374	10446	18 x 25 x 1	1175	1550
10375	10447	20 x 20 x 1	1050	1400
10416	10489	20 x 24 x 1	1250	1650
10376	10448	20 x 25 x 1	1300	1750
10417	10490	22 x 22 x 1	1250	1675
10377	10449	24 x 24 x 1	1500	2000
10378	10450	25 x 25 x 1	1625	2150
10418	10491	10 x 10 x 2	250	350
10379	10451	10 x 20 x 2	525	700
10419	10492	12 x 20 x 2	625	825
10380	10452	12 x 24 x 2	750	1000
10381	10453	14 x 20 x 2	725	975
10382	10454	14 x 25 x 2	900	1200
10383	10455	15 x 20 x 2	775	1025
10420	10493	16 x 16 x 2	650	875
10384	10456	16 x 20 x 2	825	1100
10385	10457	16 x 24 x 2	1000	1325
10386	10458	16 x 25 x 2	1050	1400
10421	10494	18 x 22 x 2	1025	1375
10387	10459	18 x 24 x 2	1125	1500
10422	10495	18 x 25 x 2	1175	1550
10388	10460	20 x 20 x 2	1050	1400
10389	10461	20 x 24 x 2	1250	1650
10390	10462	20 x 25 x 2	1300	1750
10391	10463	24 x 24 x 2	1500	2000
10392	10464	25 x 25 x 2	1625	2150
10393	10465	12 x 24 x 4	1000	1250
10394	10466	16 x 20 x 4	1100	1400
10395	10467	16 x 25 x 4	1400	1750
10396	10468	18 x 24 x 4	1500	1875
10397	10469	20 x 20 x 4	1400	1750
10398	10470	20 x 24 x 4	1657	2100
10399	10471	20 x 25 x 4	1750	2200
10400	10472	24 x 24 x 4	2000	2500
10401	10473	25 x 29 x 4	2525	3150
10402	10474	28 x 30 x 4	2900	3650

*Contact Customer Service for special and actual sizes.

INITIAL RESISTANCE

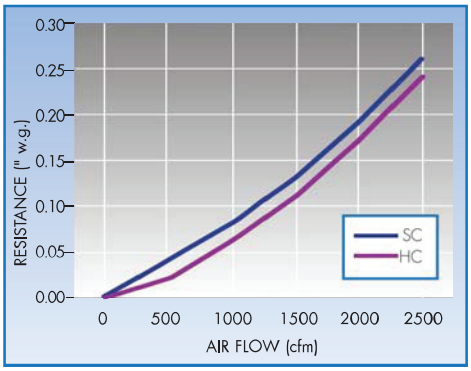

FRACTIONAL EFFICIENCY

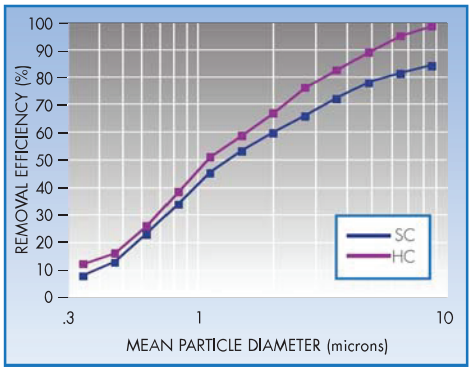

SERIES 400 ENGINEERING SPECIFICATIONS

1.0 General

1.1 Filters shall be Aerostar® Series 400 extended surface pleated air filters as manufactured by Dafco Filtration Group.
1.2 Filters shall be available in standard and high capacity configurations and available in nominal depths of 1", 2", and 4".
1.3 Underwriters Laboratories classified to UL 900.

2.0 Filter Materials of Construction

2.1 Media shall be 100% synthetic, mechanical media that does not support microbial growth.
2.2 Frame shall be a heavy duty, high strength, moisture resistant paperboard with a cross member design that increases filter rigidity and prevents breaching. Frame shall be made with 100% recycled paperboard with an average of 35% post-consumer content. Frame shall be recyclable.
2.3 Filters shall have an expanded metal support grid bonded to the air-exiting side of the filter to maintain pleat uniformity and prevent fluttering. Metal support grid shall be recyclable and contain a significant amount of post-consumer and pre-consumer content.

3.0 Filter Performance

3.1 Filters shall be MERV 10 in a high capacity configuration and MERV 8 in a standard capacity configuration in all filter depths when fully tested in accordance with the ASHRAE 52.2-2007 Test Standard.
3.2 Initial resistance of filters shall not exceed the following:

Filter Depth	Flow Rate (fpm)	Initial Resistance Standard Capacity Filter	Initial Resistance High Capacity Filter
1"	375	0.18" w.g.	0.15" w.g.
2"	500	0.19" w.g.	0.17" w.g.
4"	500	0.12" w.g.	0.11" w.g.

3.3 Filters shall be rated to withstand a continuous operating temperature up to 200°F.
3.4 Filters shall have a recommended final resistance of 1.0" w.g.

Distributed by:

DAFCO FILTRATION GROUP®

Phone: 1-888-628-3458
www.dafcofiltrationgroup.com ■ e-mail: info@dafcofiltrationgroup.com

© DFG 01/12

WHEN CLEAN AIR MATTERS

DAFCO FILTRATION GROUP®

GEOPLEAT®

AEROSTAR®

GEOPLEAT®

- *Advanced pleat design for even dust loading and maximum service life*
- *High impact plastic frame for harsh environments*
- *Very low resistance to air flow results in lower energy costs*
- *Underwriters Laboratories classified to UL 900*
- *Robust filter media resists tearing or damage*
- *Lightweight and compact design saves shipping and storage space*
- *Completely incinerable*
- *Sustainable component for a LEED Green Building initiative*
- *Exceeds LEED MERV 13 efficiency requirement*



DESCRIPTION

The new GeoPleat's advanced pleating technology increases media area per filter, reducing resistance to air flow and maximizing service life. The GeoPleat is designed to perform in nearly any HVAC installation and will not warp or collapse over time.

The GeoPleat frame is formed with high impact plastic to precise dimensions for a secure fit in either housing or holding frames. The frame is impervious to moisture, rigid, and exceptionally lightweight for safe and easy handing and installation.

Pleats are thermoformed at the tips to maintain integrity. Uniformed beads of foamed hot-melt separate the pleats to the most efficient and exacting tolerances to lower air drag across the filter. The media pack is adhesively bonded on all four sides of the filter frame, eliminating the possibility of air by-pass around the filter media.

BENEFITS

Low Air Flow Resistance

GeoPleat's improved media and pack design combine for the lowest pressure drop available in a compact rigid box filter. The lower pressure drop leads to considerable energy savings in variable drive HVAC systems.

Longer Filter Life

The New GeoPleat now has 30% more media per filter, lowering media velocity and expanding the dust holding capacity. Increased media and higher DHC extend and maximize the life of the filter. Longer filter life reduces labor and disposal footprint of used filters.

Lightweight

The GeoPleat is extremely light in weight allowing for easier and less expensive transportation, handling, safe installation and removal. GeoPleat weighs up to 75% less than competitive 12" filters. It is specifically recommended for applications with space constraints, roof-top air handling units, or anywhere a safer filter installation is desired.

Robust Media

The media is extremely durable, designed to resist damage from shipping, handling, and installation. The media is resistant to moisture and microbial growth.

CANADA GREEN BUILDING COUNCIL • CONSEIL DU BÂTIMENT DURABLE DU CANADA • MEMBER

GEOPLEAT®

AEROSTAR

DIMENSIONS

SINGLE HEADER				BOX STYLE				
PART NO. MERV 11	PART NO. MERV 13	PART NO. MERV 14	PART NO. MERV 15	PART NO. MERV 11	PART NO. MERV 13	PART NO. MERV 14	PART NO. MERV 15	SIZE
21605	21613	21621	728542	21629	21637	21645	718542	24 x 12 x 4
21609	21617	21625	728506	21633	21641	21649	718506	20 x 16 x 4
21606	21614	21622	728500	21630	21638	21646	718500	20 x 20 x 4
21611	21619	21627	728548	21635	21643	21651	718548	24 x 18 x 4
21607	21615	21623	728540	21631	21639	21647	718540	24 x 20 x 4
21608	21616	21624	728544	21632	21640	21648	718544	24 x 24 x 4
21610	21618	21626	728556	21634	21642	21650	718556	25 x 16 x 4
21612	21620	21628	728550	21636	21644	21652	718550	25 x 20 x 4

INITIAL RESISTANCE (24 x 24 x 4 – BOX STYLE)

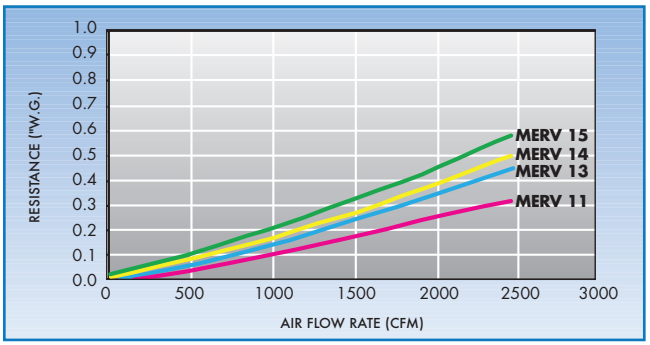

EFFICIENCY PER ASHRAE 52.2 (24 x 24 x 4 – BOX STYLE)

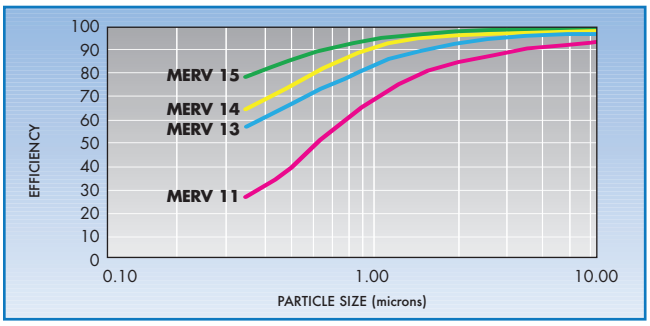

GEOPLEAT ENGINEERING SPECIFICATIONS

1.0 General
- 1.1 Filters shall be Aerostar® GeoPleat mini-pleat air filters as manufactured by Filtration Group.
- 1.2 Underwriters Laboratories classified to UL 900 and ULC-S11077.
- 1.3 Filters shall be available in a nominal depth of 4".
- 1.4 Filters are manufactured by an ISO 9001 registered company.

2.0 Filter Material of Construction
- 2.1 Media shall be 100% synthetic gradient dual density media that does not support microbial growth.
- 2.2 Frame shall be constructed with high-impact plastic and impervious to moisture and high humidity.
- 2.3 Media pack shall be adhered to plastic frame on all sides to prevent air by-pass.
- 2.4 Filter shall have a hot melt bead separator to maintain pleat pack stability and ensure consistent pleat spacing for optimum air flow.

3.0 Filter Performance
- 3.1 Filters shall be available in MERV 11 for low efficiency, MERV 13 and MERV 14 for medium efficiency, and MERV 15 for high efficiency when tested in accordance with ASHRAE 52.2-2007 Test Standard.
- 3.2 Initial resistance of filters shall not exceed the following:

Flow Rate	Initial Resistance			
(fpm)	MERV 11	MERV 13	MERV 14	MERV15
500	0.24" w.g.	0.33" w.g.	0.39" w.g.	0.43" w.g.

- 3.3 Filters shall be rated to withstand a continuous operating temperature of up to 150°F.
- 3.4 Filters shall have a max recommended final resistance of 1.5" w.g.
- 3.5 Changing filters at a lower resistance may save operating costs.

PERFORMANCE DATA (24 x 24 x 4 – BOX STYLE)

	MERV 11			MERV 13			MERV 14			MERV 15		
Air Flow (cfm)	1500	**2000**	2500	1500	**2000**	2500	1500	**2000**	2500	1500	**2000**	2500
Initial Pressure Drop ("w.g.)	0.15	**0.24**	0.36	0.23	**0.33**	0.44	0.27	**0.39**	0.52	0.30	**0.43**	0.57



Durable media pack resists damage



Shown with 2" clip designed to hold an optional pre-filter



Available in both box style and single header design

Distributed by:

DAFCO FILTRATION GROUP®

© DFG 03/13

WHEN CLEAN AIR MATTERS

Phone: 1-888-628-3458
www.dafcofiltrationgroup.com ■ e-mail: info@dafcofiltrationgroup.com

SPECIFICATIONS

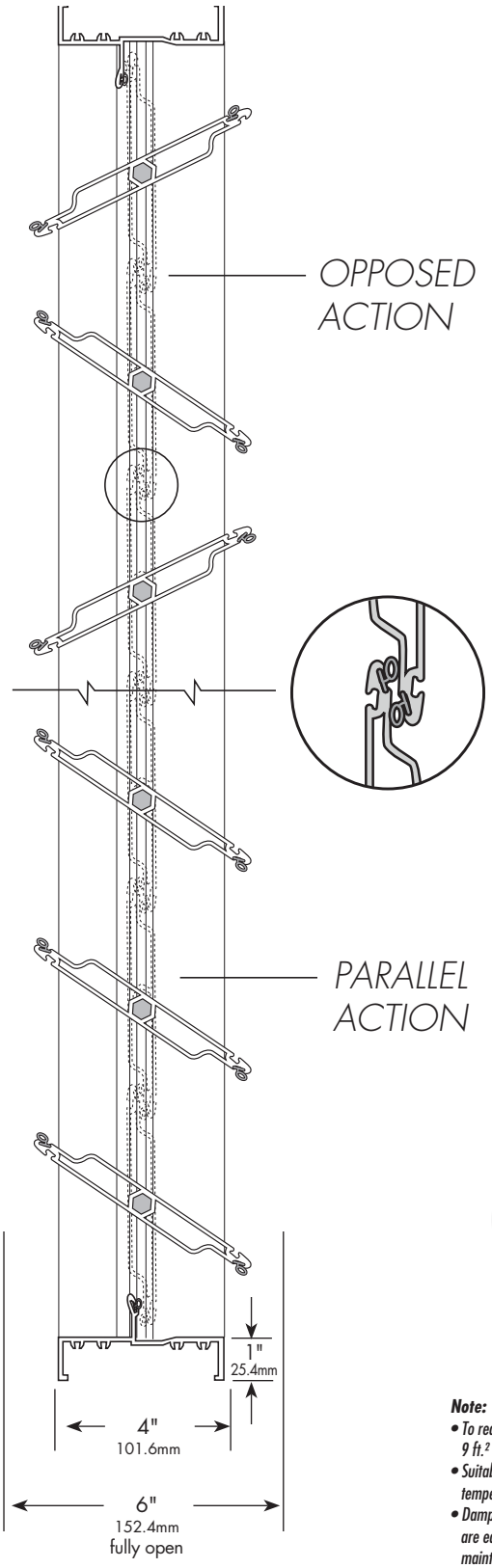

SERIES 1000
AIR-FOIL CONTROL DAMPER

- Extruded aluminum (6063T5) damper frame is not less than .080" (2.03mm) in thickness. Damper frame is 4" deep.
- Blades are extruded aluminum (6063T5) profiles.
- Blade gaskets are extruded EPDM. Frame seals are extruded TPE thermoplastic. Gaskets are secured in an integral slot within the aluminum extrusions.
- Bearings are composed of a celcon inner bearing fixed to a 7/16" (11.11mm) aluminum hexagon blade pin rotating within a polycarbonate outer bearing inserted in the frame, resulting in no metal-to-metal or metal-to-plastic contact.
- Linkage hardware is installed in the frame side and constructed of aluminum and corrosion-resistant, zinc-plated steel, complete with cup-point trunnion screws for a slip-proof grip.
- Dampers are designed for operation in temperatures ranging between -40°F (-40°C) and 212°F (100°C).
- Dampers are available with either opposed blade action or parallel blade action.
- Air leakage through a 48" x 48" (1220mm x 1220mm) damper does not exceed 10.3 cfm/ft.² (52 l/s/m²) against 4" (1kPa) w.g. differential static pressure at standard air. Standard air leakage data is certified under the AMCA Ratings Program.
- Pressure drop of a fully open 48" x 48" (1220mm x 1220mm) damper does not exceed .02" (.004 kPa) w.g. at 1000 fpm (5.08 m/s).
- Dampers are made to size required without blanking off free area.
- Dampers are available in two mounting types: i.e., "Installed in Duct" or "Flanged to Duct".
- Installation of dampers must be in accordance with manufacturer's installation guidelines.

"FLANGED TO DUCT" TYPE
2" added to duct width & height dimensions

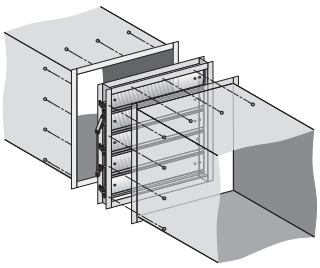

Note:
- *To reduce pressure drop, use "Flanged to Duct" type for sizes under 9 ft.² (.83m²).*
- *Suitable for operation in breathable air environments within stated temperature range.*
- *Dampers sized for duct openings exceeding 37½" (953mm) in height are equipped with a stiffener bar at mid-height to strengthen and maintain air leakage tolerances.*
- *For open blade clearance in tight spaces, consider the Series 1400 – 4" wide air-foil blade option.*

"INSTALLED IN DUCT" TYPE
½" deducted for clearance from width & height dimensions unless otherwise specified

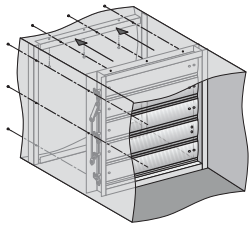

For additional information, refer to:
- *Series 1000 Product Brochure*
- *Series 1000 Pressure Drop*
- *Aluminum Standard Configurations*
- *Series 1000 Damper Free Area Charts*
- *TAMCO Aluminum Damper Torque Requirements*
- *Multiple-Section Horizontal Jackshafts*
- *Configurations Using Vertical Jackshafts*
- *Multiple-Section Damper Jumpers*
- *Square-to-Round Transition Option*
- *Installation Guidelines For Tamco Dampers*
- *Series 1400 – 4" Wide Air-Foil Blade Control Damper Specification Sheet*
- *Series 1400 – 4" Wide Air-Foil Blade Control Damper Free Area Charts*

TAMCO
www.tamco.ca

TAMCO 2000 / PRINTED IN CANADA

System 350™ A350P Electronic Proportional Plus Integral Temperature Control

The A350P is an electronic, proportional plus integral temperature control with analog 0 to 10 VDC and 0 to 20 mA outputs. The control is equipped with three user-selectable time integration constants and an adjustable throttling range of 2 to 30F° (1 to 17C°). Two models cover a setpoint range of -30 to 130°F (-35 to 55°C) and 90 to 250°F (32 to 121°C).

As are all System 350™ products, the A350P control is housed in a NEMA 1, high-impact plastic enclosure. The modular design provides easy, plug-together connections for quick installation and future expandability.



Figure 1: A350P Electronic Proportional Plus Integral Temperature Control

Features and Benefits

❑ **Modular Design**	Enables stage, display, and power modules to be purchased and installed as needed
❑ **Plug-Together Connectors and 35 mm DIN Rail Mounting**	Eliminates wiring between modules, which reduces installation costs
❑ **Two Models Cover a Wide Setpoint Range of -30 to 250°F (-35 to 121°C)**	Reduces inventory by encompassing temperature ranges required to support the majority of Heating, Ventilation, Air Conditioning, and Refrigeration (HVAC/R) applications
❑ **Minimum Output Adjustable from 0 to 60%**	Tailors the output to the requirements of the controlled device; can be used to set minimum valve or damper position
❑ **Adjustable Throttling Range of 2 to 30F° (1 to 17C°)**	Enables the user to tune the system for optimum stable performance
❑ **Field-selectable Reverse or Direct Acting Mode**	Works in heating or cooling applications
❑ **Three User-Selectable Integration Time Constants**	Provides selection of the integration constant for applications requiring proportional plus integral control
❑ **Interchangeable Temperature Sensors**	Increase versatility and serviceability

© 2014 Johnson Controls, Inc.
Part No. 24-7664-192, Rev. G
Code No. LIT-930020

Application

The A350P Temperature Control can be used as a standalone device or in conjunction with plug-together accessory modules. The addition of S350 Stage Modules allows for the control of multiple stage HVAC/R applications. Typical application for the A350P includes:

- proportional heating control with staged direct expansion cooling
- simple temperature control for air handling units
- modulating damper actuators for mixed air control
- simple proportional mixed air control

A typical System 350 Temperature Control setup includes the following:

- A350P Temperature Control
- A99B Series Temperature Sensor
- Y350R Power Module (or 24 VAC Class 2 transformer)
- S350 Stage Modules
- D350 Digital Temperature Display Module

Operation

The A350P control operates on 24 VAC/VDC and provides two simultaneous analog outputs: 0 to 10 VDC and 0 to 20 mA. A cover-mounted, 10-segment Light-Emitting Diode (LED) bar graph indicates percentage of output.

Features include:

- adjustable setpoint
- adjustable minimum output
- adjustable throttling range (proportional band)
- selectable integration time constant
- selectable Reverse Acting (RA) or Direct Acting (DA) mode of operation

IMPORTANT:	All System 350 controls are designed for use **only** as operating controls. Where an operating control failure would result in personal injury and/or loss of property, it is the responsibility of the installer to add devices (safety, limit controls) or systems (alarm, supervisory systems) that protect against, or warn of, control failure.

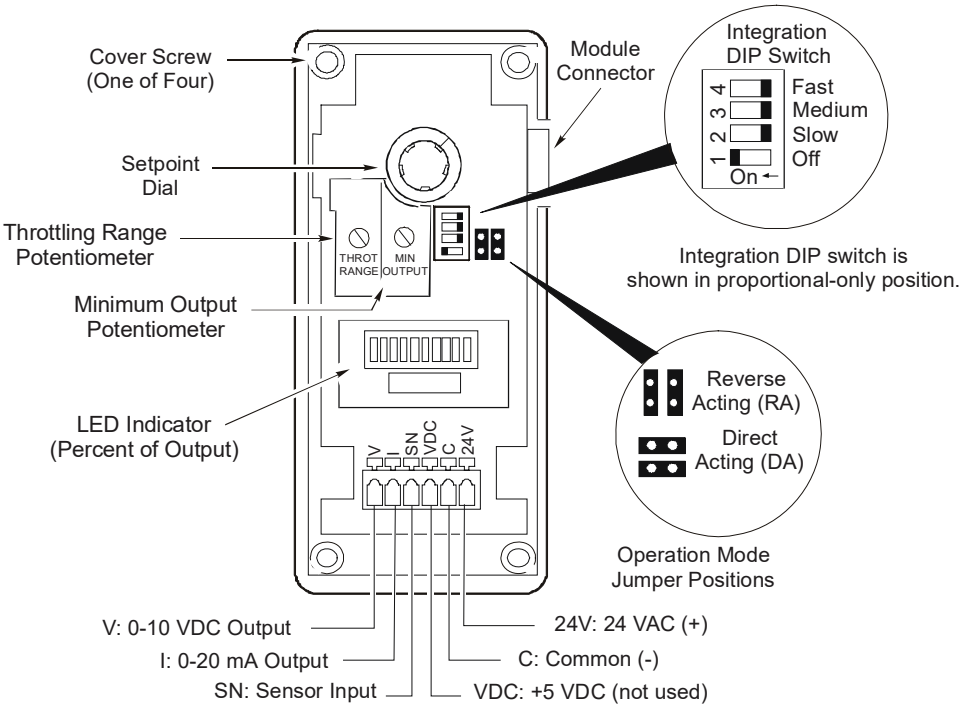

Figure 2: Interior View Showing A350P Control's Features

Minimum Output Adjustment

The minimum output adjustment sets the minimum voltage or milliampere output provided by the A350P control. It can be adjusted from 0 to 60% (0 to 6 VDC or 0 to 12 mA) of the output range.

Example:

A controlled device responding to a 4-20 mA output would require the minimum output to be adjusted to 20% or 4 mA. (See Figure 3.) The minimum output adjustment may also be used to set valves or dampers to minimum positions.

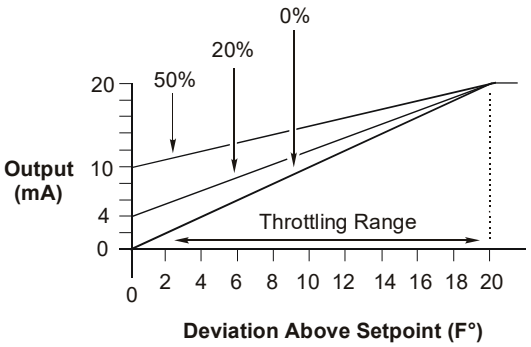

Figure 3: Output vs. Deviation from Setpoint for: Minimum Output = 0, 20, and 50%, Throttling Range = 20°F (DA)

Make the adjustment at the minimum output potentiometer marked as MIN OUTPUT. (See Figure 2.) For each 10% increase in output, the **next** bar on the LED indicator will light (only one bar is lit at any time).

Note: Before setting the minimum output potentiometer, verify that the control reads zero output (that is, no LEDs are lit).

Throttling Range (Proportional Band)

The throttling range is the range over which a control is active. Throttling range for the A350P control can be adjusted from 2 to 30F° (1 to 17C°). Make the adjustment at the throttling range potentiometer marked THROT RANGE (see Figure 2).

Integration Function

Proportional-only controls cannot hold a process at the exact setpoint. A proportional offset is always present because the control output is 0% at setpoint. Any load on the system will cause the control point to be offset from the setpoint. The greater the load on the system, the further the control point will be offset from the setpoint. (This is commonly referred to as proportional offset, and under maximum load this error will approach the throttling range.)

Some proportional-only controls are designed with their setpoint located midway through the proportional band to help compensate for this offset. This results in a plus/minus error from the setpoint rather than a single-ended error. Refer to Figure 4.

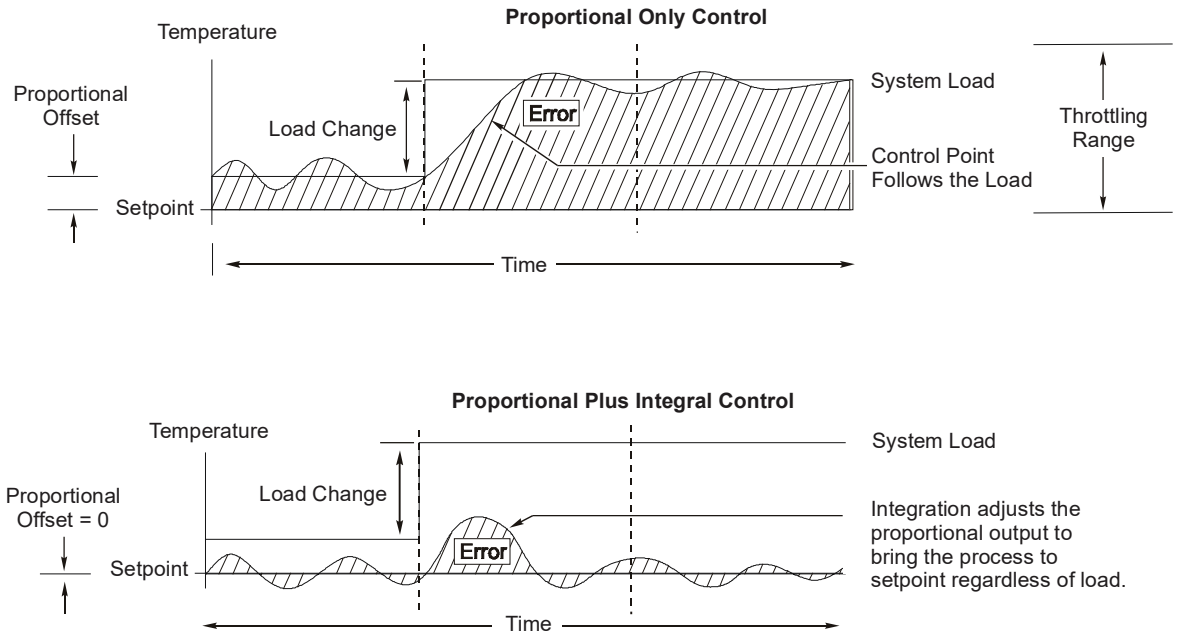

Figure 4: Comparison Between Proportional Only and Proportional Plus Integral Control

The A350P control has an integration feature that forces the control point to match the setpoint. Over time, the A350P will control the heating/cooling equipment to balance the system load at the control setpoint. (See Figure 4.)

On traditional proportional plus integral controls, the amount of correction will become too large if the system load exceeds the capacity of the equipment. When the actuated device (valve or damper) is fully open or closed and the setpoint still cannot be reached, the integration error continues to grow. The result is called *integral windup*.

The A350P control avoids *integral windup* with a patented circuit that puts a dynamic ceiling on the integrator. This resets the integration error when the sensor goes just above the setpoint plus the throttling range (in DA mode) or just below the setpoint minus the throttling range (in RA mode). This allows the process to recover from an out-of-range condition without a large overshoot.

The A350P control has three field-selectable integration constants and an off position. The integration DIP switch selects the integration constant. (See Figure 2 for location.)

The field-selectable integration constants include:

- **OFF: Switch 1 to On position, all others Off** provides proportional-only operation.

Note: In open-loop (without feedback) applications, select OFF (proportional-only) operation.

- **Slow (C3): Switch 2 to On position, all others Off** is the slowest integration constant (26 minute), and is suitable for most proportional plus integral applications. Slow is the recommended initial setting.
- **Medium (C2): Switch 3 to On position, all others Off** selects a 13-minute integration constant. If the rate of system recovery to setpoint is sluggish with the control set to slow, and if the system has enough capacity to drive the process to setpoint at a faster rate, the medium setting may be used.
- **Fast (C1): Switch 4 in On position, all others Off** is the fastest integration constant (6.5 minutes). Use fast only in instances where the rate of change at the sensor is extremely rapid and system capacity can compensate for that rapid change.

Reverse or Direct Acting Operation

With the operation jumpers in the Reverse Acting (RA) position, the analog output increases as the temperature drops below setpoint. (See Figure 5.)

With the operation jumpers in the Direct Acting (DA) position, the analog output will increase as the temperature rises above the setpoint.

Select the RA/DA mode by positioning the operation jumpers vertically or horizontally. (See Figure 2.) Position the operation jumpers vertically for RA and horizontally for DA.

The RA/DA operation jumpers are installed in the RA mode at the factory.

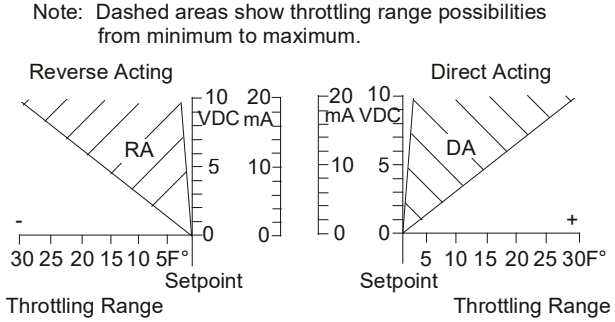

Figure 5: RA and DA Proportional Bands Shown in Proportional-Only Mode

Add-on Modules

The maximum number of add-on modules is listed in Table 1.

Table 1: Maximum Number of S350 Stage Modules per A350P

Power Source	Number of S350A or S350C Stage Modules Allowed	Number of S350A or S350C Modules (with One S350P) Allowed	Number of S350A or S350C Modules (with Two S350Ps) Allowed
Y350R	4	2	0
External Class 2 Transformer	9	8	7

S350A On-Off Stage Modules

S350A On-Off stage modules receive power, setpoint, and sensor input from the A350P control. S350A stage modules perform switching functions based on the control's setpoint and sensor information, as well as the offset and differential selected at the S350A stage module.

For more information on these modules, refer to the *System 350™ S350 Temperature, S351 Humidity, and S352 Pressure On/Off Stage Modules Product/Technical Bulletin (LIT-930080)*.

S350C Slave Stage Module

S350C slave stage modules receive power and sensor input from the A350P control. S350C slave stage modules perform switching functions based upon the control's sensor information, as well as the setpoint and differential selected at the S350C stage module.

For more information on these modules, refer to the *System 350™ S350C Temperature Slave Stage Module Product/Technical Bulletin (LIT-930084)*.

S350P Proportional Stage Modules

S350P proportional stage modules receive power, setpoint, and sensor input from the A350P control. The S350P stage module responds with an analog 0 to 10 VDC and 0 to 20 mA output signal. This is based upon the control's setpoint and sensor information, as well as the offset, throttling range, and minimum output selected at the S350P stage module.

For more information on these modules, refer to the *System 350™ S350P Proportional Plus Integral Temperature Stage Module Product/Technical Bulletin (LIT-930086)*.

Dimensions

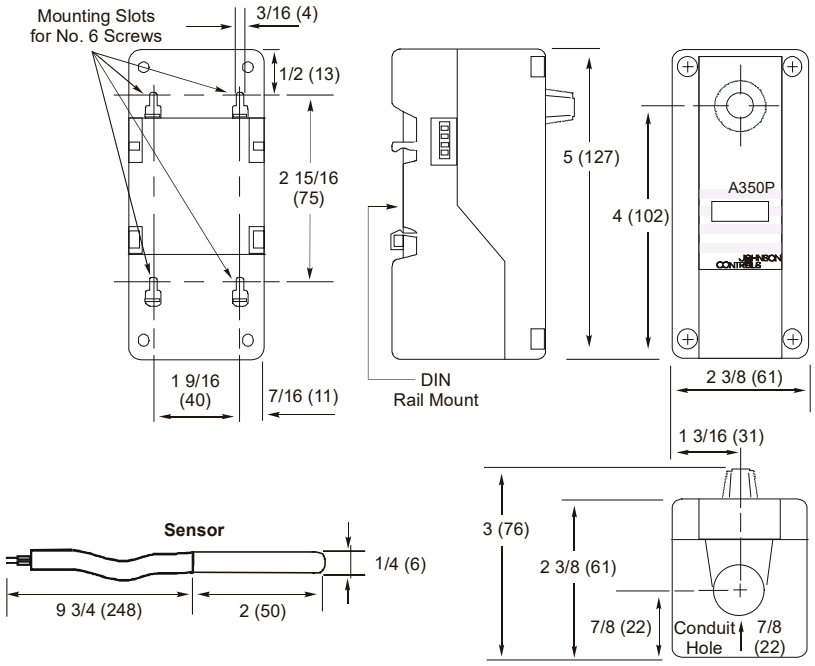

Figure 6: A350P Control and Sensor Dimensions, in. (mm)

Installation and Wiring

Celsius Scale Conversion

A Celsius scale throttling range decal is included with the A350P control. If the Celsius scale is desired:

1. Locate the throttling range and minimum output potentiometers on the main PC board. (See Figure 2.) Carefully remove the knobs and the existing decal.
2. Apply the Celsius scale decal in the same place as the original decal.
3. Rotate both knob stems completely counterclockwise (CCW).
4. Reinstall the potentiometer knobs so the arrows point to the minimum values.

The A350P Temperature Control is housed in a compact NEMA 1 plastic enclosure designed for standard 35 mm DIN rail mounting. Four key-slot mounting holes on the back of the control case are provided should surface mounting be required. If a Y350R is used, it should be mounted immediately to the right of the control. Any S350 modules would follow on the right, with the D350 being the last module mounted, also on the right.

Note: When mounting any System 350 module to rigid conduit, attach the hub to the conduit before securing the hub to the control enclosure.

WARNING: Risk of Electrical Shock.
Disconnect the power supply before making electrical connections. Contact with components carrying hazardous voltage can cause electric shock and may result in severe personal injury or death.

AVERTISSEMENT: Risque de décharge électrique.
Débrancher l'alimentation avant de réaliser tout branchement électrique. Tout contact avec des composants conducteurs de tensions dangereuses risque d'entraîner une décharge électrique et de provoquer des blessures graves, voire mortelles.

Wiring Terminals

Install all wiring to conform to the National Electrical Code and local regulations. For maximum electrical rating of control, refer to the label inside the control cover. Terminals will accept 12 to 26 AWG wire. Use only copper conductors.

1. Use a 1/8 in. (3 mm) flat-blade screwdriver to push the clamp arm down.
2. Insert the appropriate wire into the opening. Refer to Table 2 for terminal designations.
3. Release the clamp arm to secure the wire. See Figure 7.

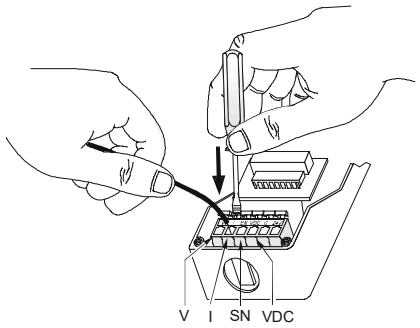

Figure 7: Cage Clamp Terminal Block

Table 2: Terminal Designations

Terminal	Description
V	0 to 10 VDC output
I	0 to 20 mA output
SN	Temperature sensor input
VDC	5 VDC power supply (not used)
C	Common for power supply, temperature sensor, and outputs
24V	24 Volts AC

Note: Output signals from the A350P control vary from 0 to 10 VDC and 0 to 20 mA. (Both outputs can be used simultaneously.) Connections can be made to both the V and I terminals, allowing the control to drive two outputs from the same RA or DA ramp simultaneously. This feature can be used to drive motor actuators of different types in a single application.

Sensor Connection

Shielded cable is not generally required for sensor wiring on runs of less than 50 feet. When using shielded cable, isolate and tape the shield at the sensor. Connect the shield to Terminal C on the A350P control.

Refer to Table 3 for the maximum recommended cable lengths for particular sizes of wire.

Table 3: Maximum Recommended Sensor Cable Lengths

Wire Gauge	Shielded Cable Length	
	Feet	Meters
14 AWG	800	244
16 AWG	500	152
18 AWG	310	94
20 AWG	200	61
22 AWG	124	38

- Various A99B Series Temperature Sensors and mounting hardware are available for use with A350P Series controls.

  The sensor must be connected to Terminals SN and C. (See Figure 2.) The sensors are not polarity sensitive.

- The sensor must be mounted so that it can accurately sense the temperature of the controlled medium.

Table 4: A350P Controls And Sensors

Control	Sensor Included Sensor Lead Length is 9-3/4 in. (0.25 m)
A350PS-1C	A99BB-25C; Range: -40 to 212°F (-40 to 100°C)
A350PS-1CM	A99BB-25C; Range: -40 to 212°F (-40 to 100°C)
A350PS-2C	A99BC-25; Range: -40 to 248°F (-40 to 120°C)
A350PS-2CM	A99BC-25; Range: -40 to 248°F (-40 to 120°C)
A350PT-1C	No Sensor Included
A350BA-2C	A99BC-25; Range: -40 to 248°F (-40 to 120°C)

- For more information regarding sensor options and installation, refer to the *A99B Series Temperature Sensors Product/Technical Bulletin (LIT-125186).*

Adjustments

Follow this procedure to set up the A350P control for the types of operation desired.

1. Remove its cover by loosening the four captive cover screws. (See Figure 2.)
2. Set the RA/DA operation jumpers to the desired mode of operation. Position the operation jumpers vertically for RA (Reverse Acting) or horizontally for DA (Direct Acting). (See Figure 2.)
3. Adjust the throttling range potentiometer to desired setting. Rotate Clockwise (CW) to increase the throttling range.

Notes: Included with the control is a Celsius scale throttling range decal. If the Celsius scale is desired, refer to the *Celsius Scale Conversion* section for decal installation instructions.

If the A350P is to be used in proportional plus integral control, the initial throttling range adjustment is seldom set below 6F° (3C°). A narrow proportional band used in conjunction with the integration may result in unstable control.

4. If minimum output is required, set the minimum output potentiometer (see Figure 2) to the desired position. The 10-segment front LED panel or a voltmeter can be used to read the minimum output. (The minimum setting for the **control** is designated by the 0 on the decal.)

Notes: Before adjusting the minimum output potentiometer, verify that the control reads zero output (that is, no LEDs are lit).

For each 10% increase in output, the **next** bar will light on the LED bar graph (only one bar is lit at anytime). In a milliampere application, each bar equals 2 mA. In a voltage application, each bar equals 1 VDC. (Refer to Figure 3.)

Example:

To set the control for a minimum output of 4 mA, turn the minimum output potentiometer clockwise until the second LED segment just lights.

If the control system does not function properly, verify that the proper operation mode is selected on each module (DA or RA), and perform the following procedures to determine the cause of the problem:

1. Check for proper voltages on the A350P control.
5. Make sure the system is stable in the proportional mode before selecting integration. Refer to the *Checkout Procedure* section.
6. Reinstall the cover and secure in place with the four captive cover screws.
7. Adjust the setpoint dial to the desired setpoint.

   If using the D350 Display Module, press and hold the setpoint button on the D350 while rotating the setpoint dial.

Note: The control's setpoint is factory calibrated at midscale to a tolerance of ±1F° (0.6C°). The setpoint tolerance at the extreme ends of the setpoint scale may be ± 4F° (2.2C°). The D350 Display Module is unaffected by this tolerance shift. Use the D350 for the most accurate setpoint selection.

Checkout Procedure

Follow this procedure to verify the A350P control is connected and functioning properly.

1. Before applying power, make sure that the installation and wiring connections are according to job specifications.
2. Set up the system for proportional mode (Integration = OFF), and make any necessary adjustments to the setpoint, throttling range, and minimum output. Then select Reverse or Direct Acting mode.
3. After making adjustments and electrical connections, apply power to the system, and observe it for stable operation.
4. If integration is required, select the fast (C1), medium (C2), or slow (C3) integration constant. Slow is the recommended initial setting. (Refer to the *Integration Function* section.)
5. Put the system back into operation. If instability occurs, consider increasing the throttling range.

Troubleshooting

a. Connect a digital voltmeter (DVM) between Terminals 24V (+) and C (-) located on the A350P's terminal block. (See Figure 2.)

   If an external transformer is used, select AC volts on the DVM. Verify that the voltage is between 20 and 30 VAC.

If a Y350R Power Module is used, select DC volts on the DVM. Verify that the voltage is between 16 and 38 VDC.

If an external DC power supply is used, select DC volts on the DVM. Verify that the voltage is between 22 and 29 VDC.

b. If the DVM reading is within the indicated voltage range, select DC volts on the DVM (DVM must be accurate to +/-0.01 VDC), and connect the (+) lead to Terminal VDC and the (-) lead to Terminal C.

   If the DVM voltage is between 4.9 and 5.1 VDC, proceed to Step 2.

   If the DVM voltage is above 5.1 VDC, replace the A350P.

c. If the DVM voltage is below 4.9 VDC, check the control using the following procedure.

   Disconnect all loads from the A350P control. (If in Direct Acting mode with power on, the system will go to full output when the sensor is disconnected. Thus, ensure that any loads are disconnected *before* disconnecting the temperature sensor.)

   Disconnect the temperature sensor completely, and recheck the DVM voltage.

   If the DVM voltage rises to a value between 4.9 and 5.1 VDC, replace the sensor.

   If the DVM voltage is still below 4.9 VDC, replace the A350P control.

2. Check sensor for proper resistance at a given temperature. (The resistance across the sensor changes with the temperature of the sensor.)

   a. Disconnect power from the A350P control.

   b. Disconnect the sensor from the control and measure the resistance across sensor leads.

   c. When measuring the sensor's resistance, use an accurate thermometer to measure the temperature at the sensor.

   d. Refer to Figure 8 to determine the optimal resistance for the measured temperature.

   e. If the measured resistance varies substantially from the optimal resistance for that temperature, the sensor or wiring must be replaced.

   f. If the sensor's resistance conforms to the chart in Figure 8, reconnect the sensor to the control.

   g. Reconnect power to the control.

Note: The sensor reading indicated by the D350 may differ somewhat from thermometer readings due to sensor tolerances, time constants, thermometer accuracy, and other factors.

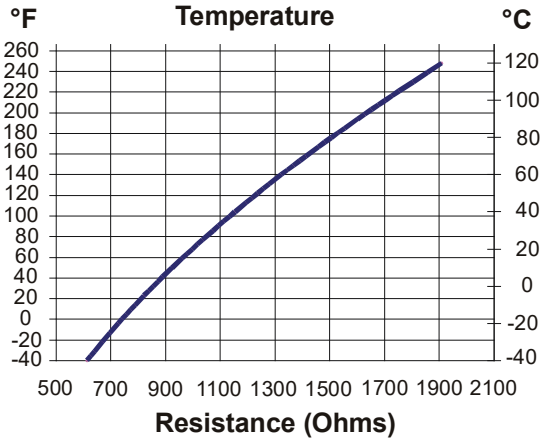

Figure 8: Temperature vs. Resistance Chart for the A99B Series Sensor

3. Check the A350P control for proper operation.

Note: Perform Steps 1 and 2 first.

a. Reconnect the sensor to the control and re-apply power.

b. Turn the throttling range and the minimum output to minimum by turning both potentiometers counterclockwise.

c. Switch off the integration.

d. Select the RA mode.

e. Connect the DVM (+) lead to the A350P control's Terminal SN and the (-) lead to Terminal C.

If the sensor voltage is less than 1.8 VDC on model A350PS-1C or less than 2.3 VDC on model A350PS-2C, go to Step 3g.

f. If the voltage is greater than 1.8 VDC on model A350PS 1C or greater than 2.3 VDC on model A350PS-2C, adjust the setpoint to 120°F (49°C) on model A350PS-1C or 240°F (116°C) on model A350PS-2C.

The output Terminal V should be less than 0.1 VDC, and all LEDs in the bar graph display should be off. If not, replace the A350P.

1. Adjust the minimum output to the maximum by turning the potentiometer CW. As the potentiometer is turned CW, the LEDs in the bar graph should turn on from left to right until the fifth or sixth bar is on. If not, replace the A350P control.

2. Adjust the minimum output to zero again, and select the DA mode.

3. If the right most LED in the bar graph is on (Terminal V = 10 VDC, Terminal I = 20 mA), go to Step 3h. If the LED is not on, replace the A350P.

g. If the sensor voltage is above 1.1 VDC on A350PS-1C or above 1.6 VDC on A350PS-2C, adjust the setpoint to match the actual temperature (T_S). The output Terminal V should be less than 0.1 VDC, and all LEDs in the bar graph should be off.

Note: Some tolerance error is present between the setpoint scale and the setpoint knob pointer. Refer to the *Adjustments* section.

1. Make sure the A350P control is in RA mode.

2. Increase the setpoint in increments of 2F° (1C°).

3. As the setpoint is increased, the control's Terminal V output voltage should go from 0 to 10 VDC, the Terminal I output current should go from 0 to 20 mA, and the LEDs should turn on, one at a time from left to right.

4. If the LEDs do not turn on and if the outputs of terminals V and I do not change as described above, replace the control.

h. Readjust the A350P control to the desired control settings.

Repairs and Replacement

Do not make field repairs or perform calibration. A99B Temperature Sensors and replacement controls are available through the nearest Johnson Controls representative. (See Tables 5 and 6 for ordering information.)

Ordering Information

Table 5: System 350 Products

Item	Product Code Number	Description
A350P Proportional Plus Integral Temperature Controls	A350PS-1C	Range: -30 to 130°F (-35 to 55°C) Throttling Range: 2 to 30 F° (1 to 17C°) (Includes the A99BC-25C Temperature Sensor)
	A350PS-2C	Range: 90 to 250°F (30 to 120°C) Throttling Range: 2 to 30 F° (1 to 17C°) (Includes the A99BC-25C Temperature Sensor)
	A350PT-1C	Range: -30 to 130°F (-35 to 55°C) Throttling Range: 2 to 30F° (1 to 17C°) (Sensor not included)
Display Modules	D350AA-1C D350BA-1C	Digital Temperature Display Module (Fahrenheit Scale) Digital Temperature Display Module (Celsius Scale)
On/Off Stage Modules	S350AA-1C S350AB-1C	Fahrenheit Scale Celsius Scale
Slave Stage Module	S350CC-1C	Dual Scale (°F and °C)
Proportional Stage Module	S350PQ-1C	Dual Scale (°F and °C)
Power Module	Y350R-1C	120 or 240 VAC, 50/60 Hz Input, Rectified Class 2, 24 VAC Output

Table 6: System 350 Accessories

Item	Product Code Number	Description
Wall Mount Plate	TE-6001-4	Includes sensor mounting clip
Cover	T-4000-2644	For wall mount plate
Mounting Clip	A99-CLP-1	Surface mounting clip for the A99B Temperature Sensor
Duct Mounting	TE-6001-1	Duct-mounting hardware with handy box
Duct Mounting	TE-6001-11	Duct-mounting hardware without handy box
Conduit Adaptor	ADP11A-600R	1/2 in. snap-fit EMT conduit adaptor (box of 10)
Immersion Well	WEL11A-601R	For liquid sensing applications
Sun Shield	SHL10A-603R	For use with outside sensors in sunny locations
DIN Rail Sections	BKT287-1R BKT287-2R	12 in. (0.3 m) long 39-1/3 in. (1.0 m) long
DIN Rail End Clamp	PLT344-1R	Consists of two end clamps
Cables for Remote Mounting of D350 Display Module	WHA29A-600R* WHA29A-603R WHA29A-604R	3 ft (0.9 m) 25 ft (7.6 m) 50 ft (15.2 m)

*WHA29A-600R may be used to daisy chain S350 modules together.

Specifications

Product	A350P Proportional Plus Time Integral Temperature Control	
Supply Voltage	Y350R Power Module:	Input: 120/240 VAC 50/60 Hz
		Output: 24 VDC, unfiltered, 10 VA
	External Source:	24 VAC, 50/60 Hz, Class 2 (20-30 VAC)
	Note: Only one supply voltage source may be used.	
Power Consumption	3.2 VA maximum	
Ambient Temperature	Operating:	-30 to 150°F (-34 to 66°C)
	Shipping:	-40 to 185°F (-40 to 85°C)
Humidity (all modules)	0 to 95% RH non-condensing; maximum dew point 85°F (29°C)	
Setpoint Adjustment Range	A350PS-1C:	-30 to 130°F (-35 to 55°C)
	A350PS-2C:	90 to 250°F (30 to 120°C)
	A350PT-1C:	-30 to 130°F (-35 to 55°C)
Throttling Adjustment Range	2 to 30F° (1 to 17C°)	
Analog Outputs	0 to 10 VDC (550 ohm load minimum) and 0 to 20 mA (600 ohm load maximum)	
Minimum Output	Adjustable from 0 to 60% of the output	
Output Indication	A ten segment LED bar graph indicates percentage of output.	
Control Action	Direct or reverse action is jumper selectable.	
Integration Constant	Four selectable rates: fast, medium, slow, and off	
Sensor	Replaceable positive temperature coefficient sensor	
	Reference resistance 1035 ohms at 77°F (25°C)	
Material	Case and cover:	NEMA 1 high-impact thermoplastic
Agency Listing	UL Listed, CCN XAPX, File E27734	
	UL Listed for Canada, CCN XAPX7, File E27734	

The performance specifications are nominal and conform to acceptable industry standards. For application at conditions beyond these specifications, consult Johnson Controls Application Engineering at (414) 274-5535. Johnson Controls, Inc. shall not be liable for damages resulting from misapplication or misuse of its products.

Building Efficiency
507 E. Michigan Street, Milwaukee, WI 53202

® Johnson Controls and PENN are registered trademarks of Johnson Controls, Inc. in the United States of America and/or other countries. All other trademarks used herein are the property of their respective owners. © Copyright 2014 by Johnson Controls, Inc. All rights reserved.

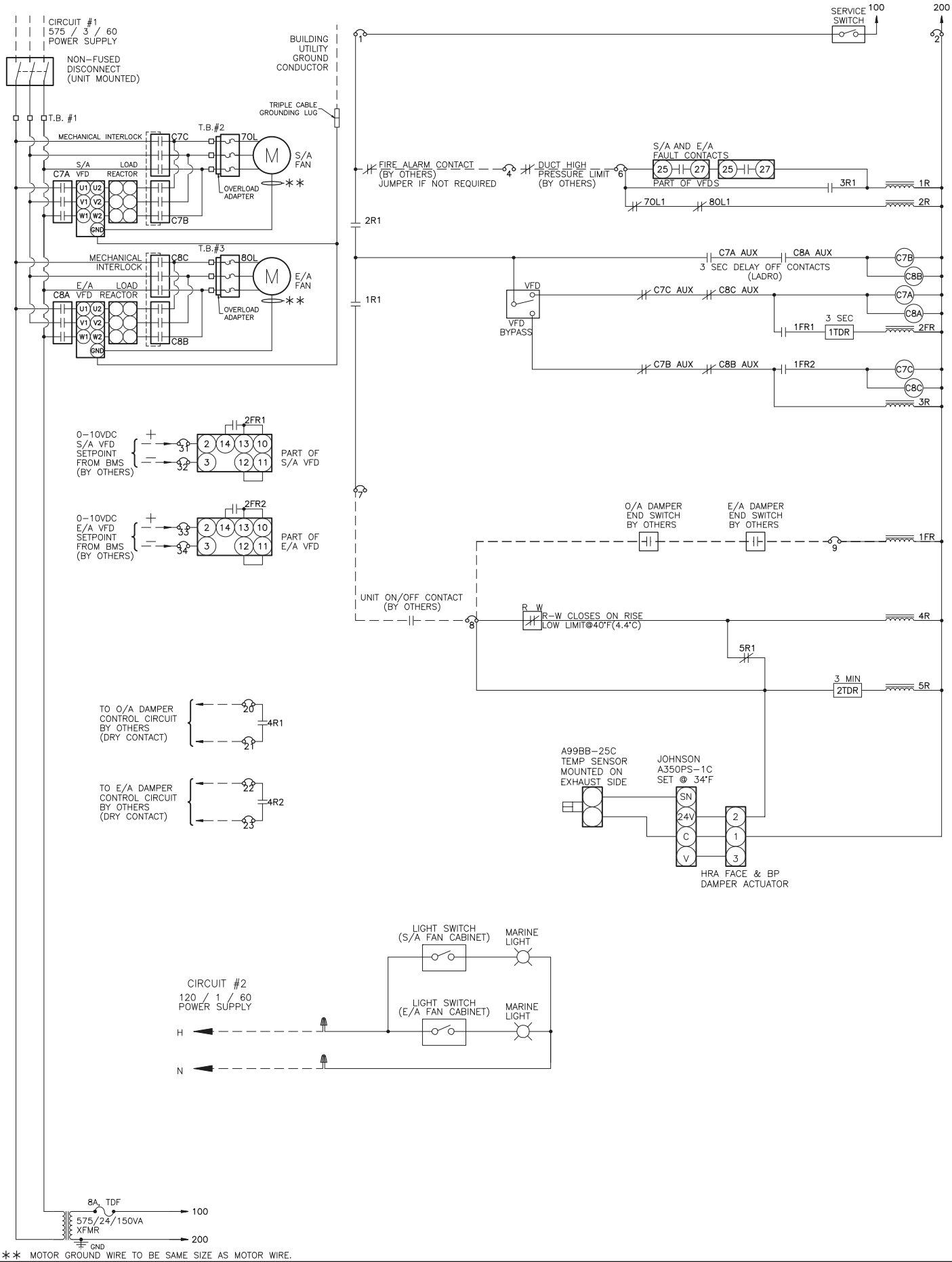

** MOTOR GROUND WIRE TO BE SAME SIZE AS MOTOR WIRE.

EngA®

ENGINEERED AIR®

TAG: AHU-2		INTERNAL WIRING DIAGRAM LM SERIES
REVISION: AUG 22, 2018	DRN.BY: HMC	DWG.NO: M19012E-01-1
DATE: JUN 14, 2018	CHKD.BY: KWL	

19

Mécanique Nordique
Plumbing
Heating
Ventillation
mecanique.nordique@hotmail.com

1255 Rue J.A.Bombardier
Lévis, Québec
G7A 2P4
Téléphone: 418-496-1109
Télécopieur: 418-496-3803

REVIEWED BY CONTRACTOR
Kudlik Construction Ltd.
NAME: Sandra Rousseau P.Eng
DATE: Aoû 28, 2018

IQALUIT WWTP UPGRADE

DRAWING FOR APPROVAL

Ingineer : NUNAMI STANTEC

DRAWING #: AD-019R3

Section		23 82 39
Article		PART 2
Plans		M-802
Application	:	COILS UH & CUH
Brand	:	Engineered Air
Model	:	Different Models
Revised #	:	1
Supplyer	:	Engineered Air

Pages incl. 13
Date : **2018-08-28**
By : **Mécanique Nordique Inc.**

STANTEC PROJECT #: 110126045
SUBMITTAL # AD-019R3

This review by Stantec is for general conformance with the design concept of Stantec's design of the:
☐ Architectural ☐ Structural ☑ Mechanical ☐ Electrical ☐ Other

Stantec

component(s) only and does not mean that Stantec has verified or approves the shop drawing(s). The Contractor remains solely responsible for the shop drawing(s) and this review by Stantec does not relieve the Contractor of the Contractor's responsibility for errors or omissions in the shop drawing(s) or for meeting all requirements of the contract documents. This review does not mean that Stantec approves the detailed design inherent in the shop drawing, responsibility for which shall remain with the Contractor submitting same, nor does this review mean that Stantec accepts any deviation of the shop drawing(s) from the contract documents. The Contractor is responsible for confirming all dimensions and correlating them at the job site, for all construction means, methods and techniques, and for coordination of construction work of all trades, including coordination of all shop drawings.

☑ REVIEWED
☐ REVIEWED, AS NOTED
☐ REVISE AND RESUBMIT
☐ NOT REVIEWED

DATE 2018-08-30
BY Brendan Zrum, P.Eng

DRAWING TRANSMITTAL SHEET

EngA® ENGINEERED AIR®

JOB NO. J203H

DATE June 19, 2018

☑ **MONTREAL SALES OFFICE**
1450 CUNARD STREET
LAVAL QC
H7S 2B7
(450) 662-1210

CANADIAN HEAD OFFICE
CALGARY AB

CANADIAN FACTORY
CALGARY AB
EDMONTON AB
NEWMARKET ON

OTHER CANADIAN SALES OFFICES
VANCOUVER, EDMONTON, CALGARY, SASKATOON, REGINA, WINNIPEG, LONDON, SUDBURY, TORONTO, HAMILTON, OTTAWA, HALIFAX, MONCTON

CONTRACTOR MECANIQUE NORDIQUE INC

ADDRESS 1255 RUE J.A. BOMBARDIER

LEVIS QC

G7A 2P4

ENGINEER STANTEC CONSULTING LTD WHITEHORSE

JOB NAME IQALUIT WWTP

☑ THIS ORDER IS SUBJECT TO APPROVAL. MANUFACTURING IS HELD PENDING RETURN OF ONE APPROVED COPY OF THESE FORMS TO THE INDICATED OFFICE.

☐ THIS ORDER IS NOT SUBJECT TO APPROVAL AND IS BEING MANUFACTURED ACCORDING TO THE ATTACHED FORMS.

COPIES ENCLOSED	DESCRIPTION
1	EngA Mechanical Drawing WF-1A-18"-18Ga
1	EngA Mechanical Drawing CUH-3 (ARR-4)
1	EngA Mechanical Drawing HUH-1
1	EngA Mechanical Drawing HUH-2
1	EngA Mechanical Drawing VUH1
1	EngA Mechanical Drawing RHC-1
1	EngA Mechanical Drawing PHC-1, HC-1.3
1	EngA Coil Certificate Data Sheet
1	Installation Operation and Maintenance Manual

PER MATHIEU HAMEL / BGP

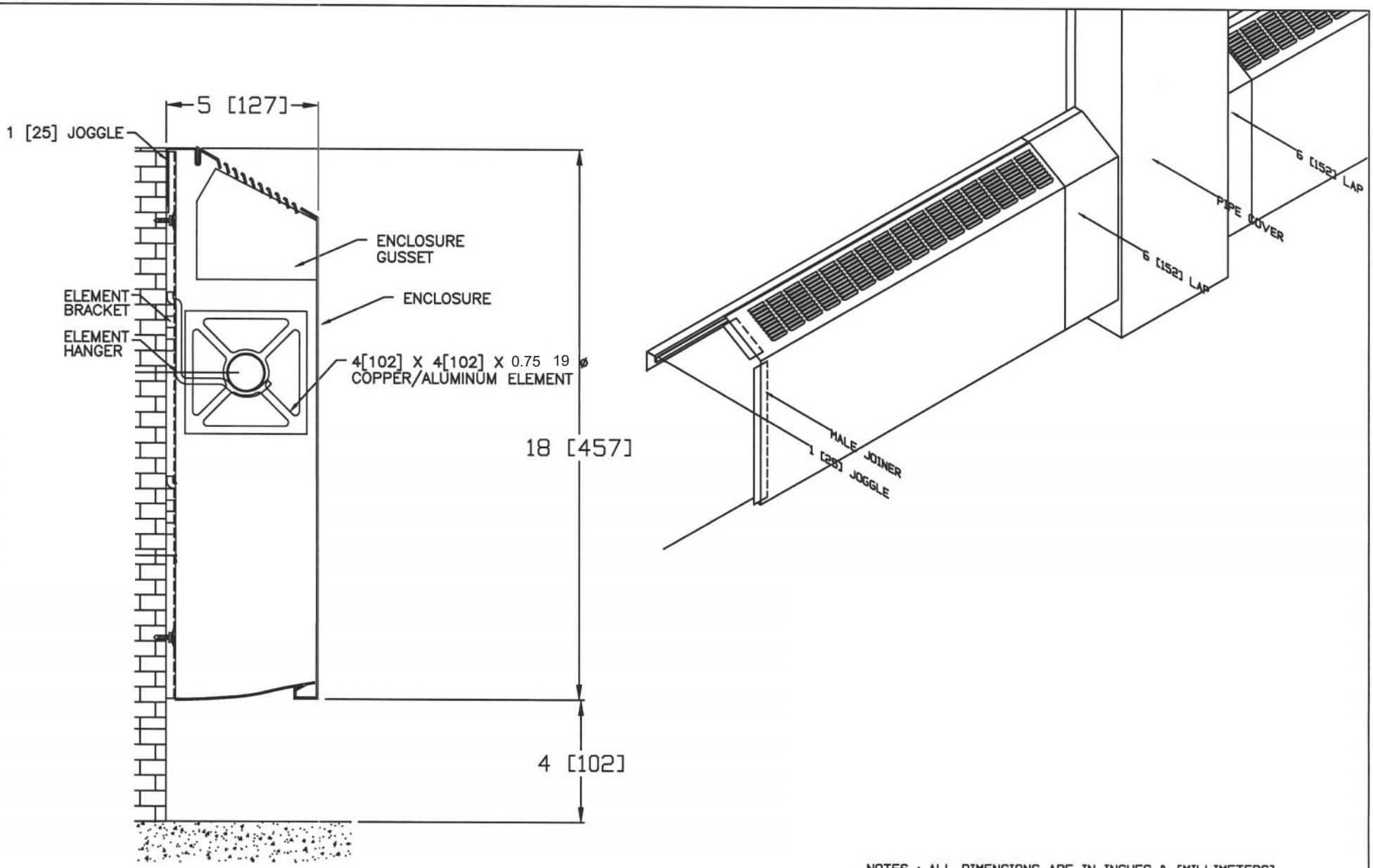

NOTES : ALL DIMENSIONS ARE IN INCHES & [MILLIMETERS]

CAPACITIES ARE BASED ON 3 FPS (0.9 M/S) WATER VELOCITY

WF-1A-18-18GA FINNED TUBE RADIATION (TYPE #1)

EngA ENGINEERED AIR

REVISIONS :			
DATE :	DRN BY :	CHKD.BY:	DRWG NO :
12/05/2017	E.L.		J203H-WF-1A-18

EngA ENGINEERED AIR

WF Series
Room Schedule

Order No: J-203H
Job Name: Iqaluit WWTP
Customer: Mecanique Nordique
Engineer: Stantec Consulting Ltd. (Whitehorse)

Enclosure Type #1
Revision number:
Entering Air Temp.: 65.0°F (18.3°C)
Fluid Type: Propylene-Glycol 50%
Average Fluid Temp.: 165.0°F(73.9°C)
Capacity: 1043 Btuh/Ft(1.00 kW/m)

Reference dwgs
M301

ELEMENT
3/4" x 4" x 4" CU/AL 50 fin/ft
19mm x 102mm x 102mm 164 fin/m
No of rows **1**

Support

ENCLOSURE: WF-1A-18"(457)-18 Ga
Gauge: 18 Ga
Height: 18"(457 mm)

Corners

Type on Drawing
WF-1

Room Number or Name	Floor Drawing	2.0' (610 mm)	2.5' (762 mm)	3.0' (914 mm)	3.5' (1067 mm)	4.0' (1218 mm)	4.5' (1372 mm)	5.0' (1524 mm)	5.5' (1676 mm)	6.0' (1829 mm)	6.5' (1981 mm)	7.0' (2134 mm)	7.5' (2286 mm)		Total Length of Element ft(m)	Element Hanger	Enclosure Bracket	Joggle 1"x10'	2.0' (610 mm)	2.5' (762 mm)	3.0' (914 mm)	3.5' (1067 mm)	4.0' (1218 mm)	4.5' (1372 mm)	5.0' (1524 mm)	5.5' (1676 mm)	6.0' (1829 mm)	Total Length of Enclosure ft(m)	6"(152) Lap	Left end cap	Right End Cap	Special Corner	Special Corner	Corner 90°	Corner 135°	Corner 225°	Corner 270°	Manual Dampers	Removable Access Panel 24"
1	lower		1												2.5 (0.8)	2	2	1				1						3.5 (1.1)		1	1								
Totals			1												2.5 (0.8)	2	2	1				1						3.5 (1.1)		1	1								

Remarks: Santex Finish

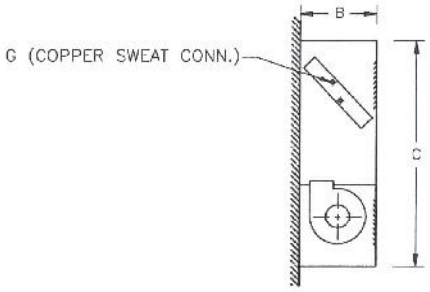

ARR–4 FULLY EXPOSED

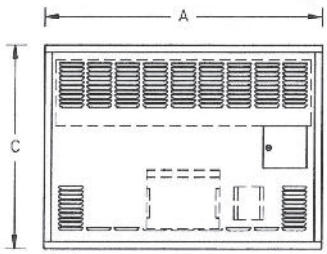

FRONT ELEVATION

GENERAL INFORMATION, DIMENSIONS AND WEIGHT

MODEL	ARR–	NOMINAL CFM/L/s	MOTOR HP/WATTS	MOTOR RPM	MOTOR AMPS	# OF FAN	A in/mm	B in/mm	C in/mm	G in/mm	WEIGHT LBS./KG.
CUH–3	4	300 142	1/25 30	1050	0.8	1	26 660	9 1/2 241	28 711	1/2 13	75 34

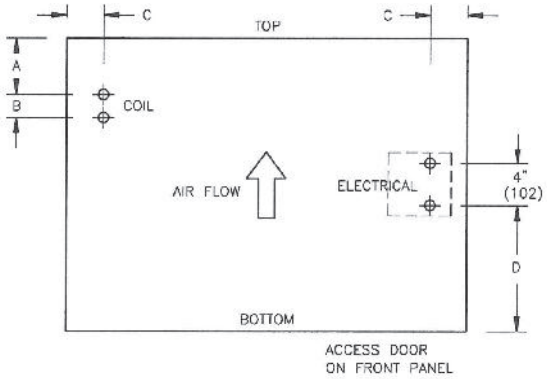

VERTICAL ARRANGEMENTS

ARR–4

MODEL	A in/mm	B in/mm	C in/mm	D in/mm
CUH– 3	5 3/8 137	2 3/16 56	3 1/2 89	12 305

NOTES : DRAWINGS REPRESENT VIEW OF BACK PANEL WHEN LOOKING AT FRONT OF UNIT.
KNOCKOUTS ARE DUAL TYPE, 7/8" (22mm) AND 1 1/8" (29mm)ø.

MOTOR VOLTAGE : 115/1/60
UNIT C/W : INSULATION
FILTER
UNIT MOUNTED 3 SPEED / OFF SWITCH

TAG : C H1.1

CABINET UNIT HEATER

EngA® ENGINEERED AIR®

REVISIONS:			
DATE:	DRN.BY:	CHKD.BY:	DRWG.NO.:
JUNE 19/2018	BGP		J203H–CUH3–ARR4

EngA ENGINEERED AIR

Room Schedule

Cabinet, Horizontal and Vertical Unit Heater

Order No: J-203H
Job Name: Iqaluit WWTP
Customer: Mecanique Nordique
Engineer: Stantec Consulting Ltd. (Whitehorse)

Ref. Dwgs:
Revision no:

Unit Heater Type #1 **Enter Air Temp.:** 50.0°F (10.0°C) **Fluid Type: Propylene-Glycol 50%** **Enter Fluid Temp.:** 180.0°F(82.2°C) **Fluid Temp. Drop:** 30.1°F (16.7°C)

Room	Grid D7									
Type On Plan	CUH-1.1									
Quantity	1									
Model	CUH-3 (Arr-4)									
Capacity MBH (kW)	17.34 (5.1)									
Flow Rate GPM (l/s)	1.41 (0.09)									
Pressure Drop Ft (kPa)	2.4 (7.0)									
Air Flow CFM (l/s)	300 (141.6)									
Motor Rating (HP)	.0400									
Motor Voltage	115/1/60									
Motor Amps	0.6									
Motor Type	Std									
3 Speed / Off Switch - Unit Mtd	X									
Insulation	X									
Filter	X									

Remarks: Satin coat steel 16Ga Casing c/w Santex powder coat prime finish

July 30, 2018

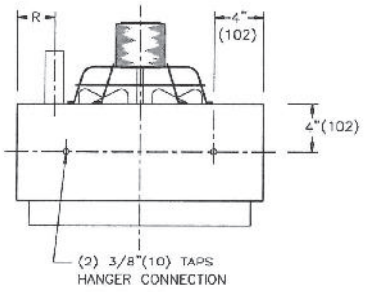

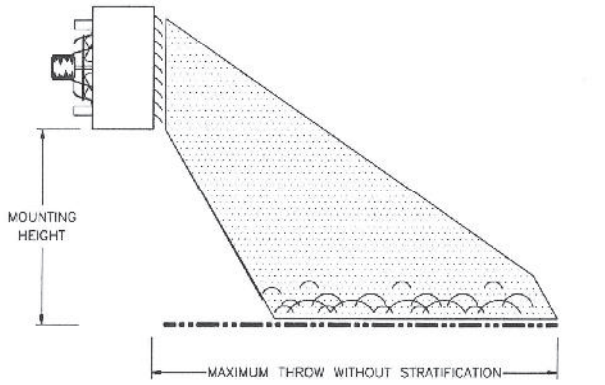

NOTE: THE FIGURES GIVEN FOR HORIZONTAL THROW IN THE TABLE BELOW INDICATE THE NECESSITY TO DIRECT AIR FLOW DOWNWARDS WITH THE HORIZONTAL LOUVRES WITH HIGH DISCHARGE AIR TEMPERATURES, WHILE COOLER DISCHARGE TEMPERATURES ALLOW A FLATTER, LONGER THROW WITHOUT STRATIFICATION.

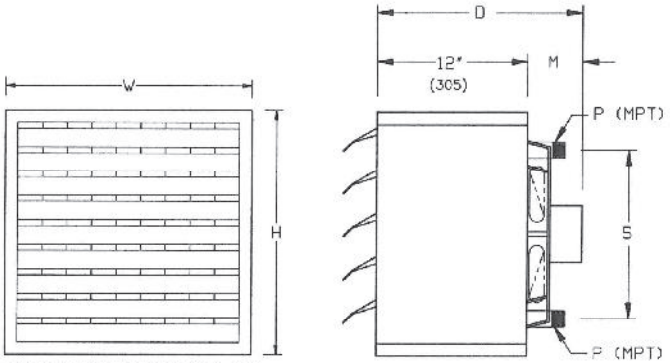

SHOWN WITH THE STANDARD 4 WAY ADJUSTABLE DIFFUSERS AND FAN GUARD

ROUGHING IN DIMENSIONS

IMPERIAL

MODEL	H (in)	W (in)	D (in)	M (in)	R (in)	S (in)	P (in)	NOISE LEVEL	WEIGHT (LBS)	MAX.MTG HEIGHT (FT)	HORIZONTAL THROW (FEET) LEAVING AIR TEMPERATURE			
											75°F	100°F	125°F	150°F
H1	19 1/2	21	18 1/2	6 1/2	3	13 7/8	1	LOW	88	9	27	24	22	17

METRIC

MODEL	H (mm)	W (mm)	D (mm)	M (mm)	R (mm)	S (mm)	P (mm)	NOISE LEVEL	WEIGHT (KG.)	MAX.MTG HEIGHT (M)	HORIZONTAL THROW(METERS) LEAVING AIR TEMPERATURE			
											24°C	38°C	52°C	66°C
H1	495	533	470	165	76	352	25	LOW	40	2.7	8.2	7.3	6.7	5.2

MOTOR VOLTAGE : 115/1/60

NOTE : DIMENSIONS ARE GIVEN IN INCHES AND MILLIMETERS

TAG(S): H-1.4, H-2.2

HORIZONTAL UNIT HEATER

EngA® ENGINEERED AIR®

REVISIONS:			
DATE: JUNE 19/2018	DRN.BY: BCP	CHKD.BY:	DRWG.NO.: J203H-HUH-1

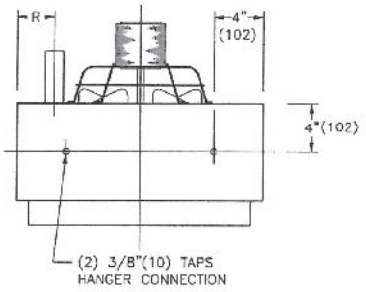

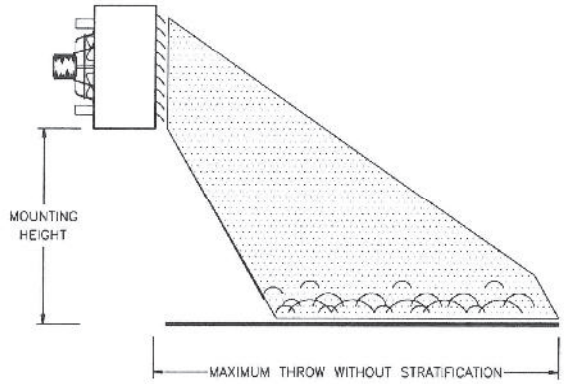

NOTE: THE FIGURES GIVEN FOR HORIZONTAL THROW IN THE TABLE BELOW INDICATE THE NECESSITY TO DIRECT AIR FLOW DOWNWARDS WITH THE HORIZONTAL LOUVRES WITH HIGH DISCHARGE AIR TEMPERATURES, WHILE COOLER DISCHARGE TEMPERATURES ALLOW A FLATTER, LONGER THROW WITHOUT STRATIFICATION.

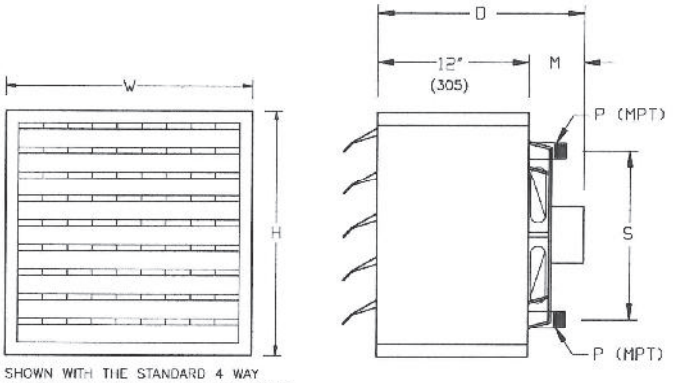

SHOWN WITH THE STANDARD 4 WAY ADJUSTABLE DIFFUSERS AND FAN GUARD

ROUGHING IN DIMENSIONS

IMPERIAL

MODEL	H (in)	W (in)	D (in)	M (in)	R (in)	S (in)	P (in)	NOISE LEVEL	WEIGHT (LBS)	MAX.MTG HEIGHT (FT)	HORIZONTAL THROW (FEET) LEAVING AIR TEMPERATURE			
											75°F	100°F	125°F	150°F
H2	22	24	18 1/2	6 1/2	3	16 3/8	1	LOW	94	9	35	30	27	21

METRIC

MODEL	H (mm)	W (mm)	D (mm)	M (mm)	R (mm)	S (mm)	P (mm)	NOISE LEVEL	WEIGHT (KG.)	MAX.MTG HEIGHT (M)	HORIZONTAL THROW(METERS) LEAVING AIR TEMPERATURE			
											24°C	38°C	52°C	66°C
H2	559	610	470	165	76	416	25	LOW	43	2.7	10.7	9.1	8.2	6.4

MOTOR VOLTAGE : 115/1/60

NOTE : DIMENSIONS ARE GIVEN IN INCHES AND MILLIMETERS

TAG(S): H-1.6, H-2.6

HORIZONTAL UNIT HEATER

EngA® ENGINEERED AIR®

REVISIONS:			
DATE:	DRN.BY:	CHKD.BY:	DRWG.NO.:
JUNE 19/2018	BGP		J203H-HUH-2

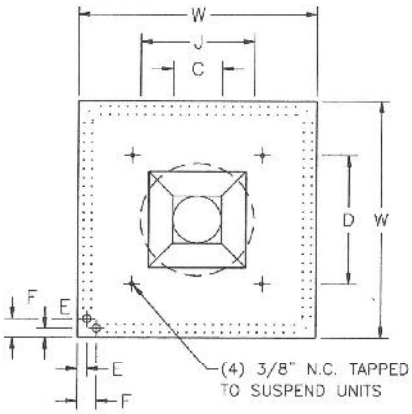

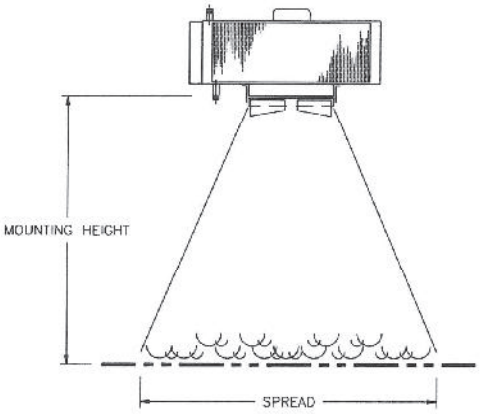

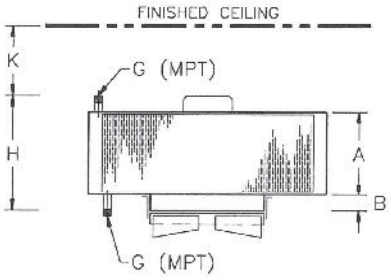

SHOWN WITH THE STANDARD
LOUVRE CONE DIFFUSER (LCD)

NOTE:
THE FIGURES GIVEN FOR SPREAD IN THE TABLE BELOW INDICATE THE NECESSITY TO UTILIZE THE STANDARD LOUVRE CONE DIFFUSER WHEN HIGH MOUNTING HEIGHTS ARE REQUIRED OR WHEN WARM AIR NEEDS TO BE DIRECTED TO A PARTICULAR AREA.

DIMENSION K IS MINIMUM RECOMMENDED CLEARANCE.

IMPERIAL

MODEL	H (in)	W (in)	A (in)	B (in)	C (in)	D (in)	E (in)	F (in)	G (in)	J (in)	K (in)	NOISE LEVEL	WEIGHT LBS.	MAXIMUM MTG. HEIGHT (FT)		SPREAD (FEET)	
														W/O LCD	WITH LCD	W/O LCD	WITH LCD
V1	12	22	7 3/4	1 1/2	5	12	7/8	1 3/4	3/4	10 1/2	7	LOW	56	13	16	27	18

METRIC

MODEL	H (mm)	W (mm)	A (mm)	B (mm)	C (mm)	D (mm)	E (mm)	F (mm)	G (mm)	J (mm)	K (mm)	NOISE LEVEL	WEIGHT (KG.)	MAXIMUM MTG. HEIGHT (M)		SPREAD (METERS)	
														W/O LCD	WITH LCD	W/O LCD	WITH LCD
V1	305	559	197	38	127	305	22	44	19	267	178	LOW	25	4.0	4.9	8.2	5.5

MOTOR VOLTAGE : 115/1/60

NOTE : DIMENSIONS ARE GIVEN IN INCHES AND MILLIMETERS

TAG(S) : H-1.7

VERTICAL UNIT HEATER

EngA ENGINEERED AIR

REVISIONS:			
DATE: JUNE 19/2018	DRN.BY: BCP	CHKD.BY:	DRWG.NO.: J203H-V1

EngA ENGINEERED AIR

Room Schedule

Cabinet, Horizontal and Vertical Unit Heater

Order No: J-203H
Job Name: Iqaluit WWTP
Customer: Mecanique Nordique
Engineer: Stantec Consulting Ltd. (Whitehorse)

Ref. Dwgs:
Revision no:

Unit Heater Type #1 **Enter Air Temp.:** 50.0°F (10.0°C) **Fluid Type: Propylene-Glycol 50%** **Enter Fluid Temp.:** 180.0°F(82.2°C) **Fluid Temp. Drop:** 30.1°F (16.7°C)

Room	Grid F.5-6	Grid E5-6	Elec Upper lvl	DAF Grid F5-6	Grid E4-5					
Type On Plan	UH-1.4	UH-1.6	UH-2.2	UH-2.6	UH-1.7					
Quantity	1	1	1	1	1					
Model	H-1	H-2	H-1	H-2	V-1					
Capacity MBH (kW)	24.78 (7.3)	30.75 (9.0)	24.78 (7.3)	30.75 (9.0)	32.59 (9.5)					
Flow Rate GPM (l/s)	2.01 (0.13)	2.5 (0.16)	2.01 (0.13)	2.5 (0.16)	2.64 (0.17)					
Pressure Drop Ft (kPa)	1.1 (3.2)	1 (2.9)	1.1 (3.2)	1 (2.9)	0.7 (2.1)					
Air Flow CFM (l/s)	550 (259.6)	620 (292.6)	550 (259.6)	620 (292.6)	710 (335.1)					
Motor Rating (HP)	.1700	.1700	.1700	.1700	.0500					
Motor Voltage	115/1/60	115/1/60	115/1/60	115/1/60	115/1/60					
Motor Amps	2	2	2	2	1.6					
Motor Type	Std	Std	Std	Std	Std					

Remarks: Satin coat steel 18Ga Casing c/w Santex powder coat prime finish

July 30, 2018

JOB IQALUIT WWTP DIV. NO. J203H

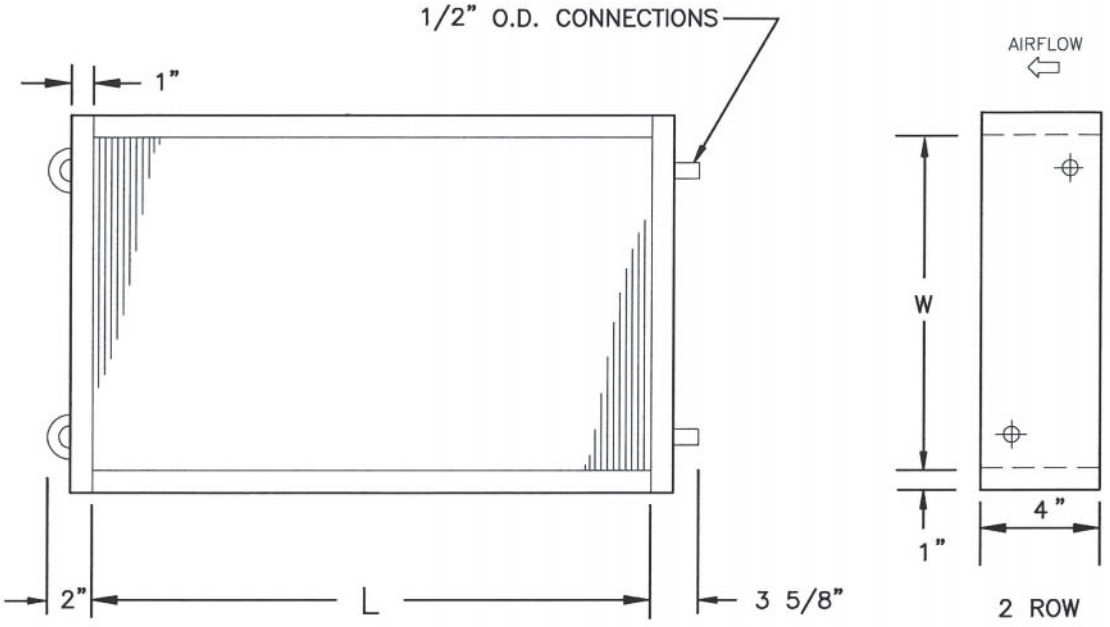

NOTE: DIMENSIONS ARE GIVEN IN INCHES [AND mm]

COIL TAG	QUANTITY	W	L	ROWS/FINS
RHC–1	1	7 1/2 [191]	8 [203]	2R / 8

EngA® ENGINEERED AIR®

SERPENTINE WATER COIL

REVISIONS

DATE:	DRN.BY:	CHKD.BY:	DRWG. No.
JUN 19/2018	BGP	LS	J203H–M1

PROJECT: IQALUIT WWTP JOB NO.: J203H

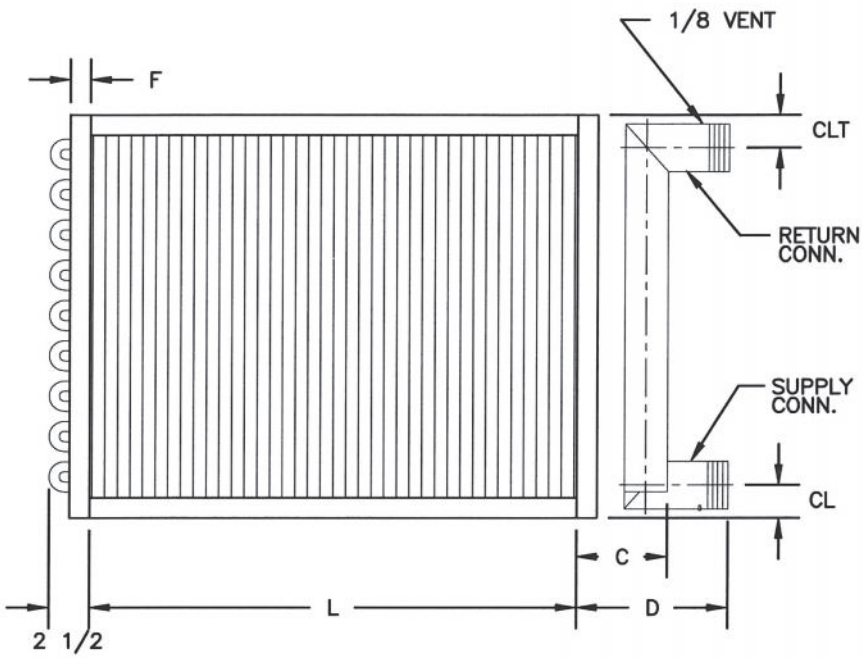

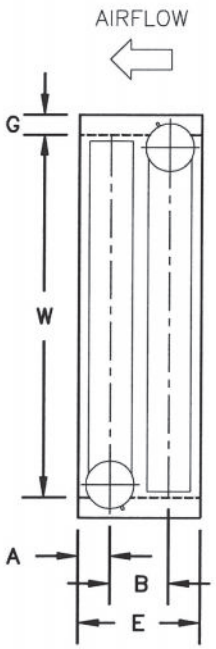

LEFT HAND

NOTE: DIMENSIONS ARE GIVEN IN INCHES [AND MM]

Tag	PHC–1	HC–1.3	
Quantity	1	1	
W	7 1/2 [190]	12 [304]	
L	8 [203]	15 [381]	
Rows/Fins	2R / 8	2R / 10	
Connections	3/4 [19] MPT	3/4 [19] MPT	
Hand	LEFT	LEFT	
CL	11/16 [17]	5/8 [16]	
CLT	1 1/16 [27]	1 [25]	
A	1 7/16 [37]	1 3/16 [30]	
B	2 [51]	2 1/4 [57]	
C	3 1/4 [83]	3 1/4 [83]	
D	6 3/4 [171]	6 3/4 [171]	
E	5 [127]	5 [127]	
F	1 [25]	1 [25]	
G	1 [25]	1 [25]	

EngA® ENGINEERED AIR®

WATER COIL– MITRE HEADERS

REVISIONS –

DATE:	DRN.BY:	CHKD.BY:	DRWG. No.
JUN 19/2018	BGP	LS	J203HM–2

EngA | ENGINEERED AIR

WATER / GLYCOL COIL PERFORMANCE DATA

Version 3.5.23E

Job Name:	Iqaluit WWTP	**Job No.:**	(J203H)
Customer:	Mecanique Nordique	**Tag No.:**	
Location:	Levis, QC	**Altitude:**	245 feet

	Case #1	Case #1	Case #1
Coil Tag	PHC-1	RHC-1	HC-1.3
Service	Heating	Heating	Heating
Tube Size	1/2" (13 mm) OD	1/2" (13 mm) OD	5/8" (16 mm) OD
Fin Surface	Corrugated- 0.0065"	Corrugated- 0.0065"	Corrugated- 0.0065"
Coil Size, in (H x L x R x FPI)	7.5 x 8 x 2 / 8	7.5 x 8 x 2 / 8	12 x 15 x 2 / 10
Coil Size, mm (H x L x R x FPI)	190 x 203.25 x 2 / 8	190 x 203.25 x 2 / 8	304 x 381 x 2 / 10
Pass-Circ-Blank	6 - 2 - 0	10 - 1 - 2	8 - 2 - 0
Header Size, in (mm)	0.75 (19)	-	0.75 (19)
Coil Handing	-	-	-
Header Conn.	Same	Same	Same
Total Capacity, MBH (kw)	9.7 (2.84)	6.23 (1.83)	17.33 (5.08)
Sensible Capacity, MBH (kw)	9.7 (2.84)	6.23 (1.83)	17.33 (5.08)
Air Flow Conditions	Standard CFM	Standard CFM	Standard CFM
Air Flow, CFM (l/s)	180 (85.0)	180 (85.0)	636 (300.2)
Air EDBT, °F (°C)	-41.8 (-41.0)	37.4 (3.0)	70.0 (21.1)
Air EWBT, °F (°C)	-	-	-
Air LDBT, °F (°C)	8.1 (-13.3)	69.5 (20.8)	95.2 (35.1)
Air LWBT, °F (°C)	-	-	-
Water Removal, lb/h (kg/h)	-	-	-
Leaving Coil Velocity, AFPM (m/s)	384 (1.95)	435 (2.21)	537 (2.73)
Coil Pressure Drop, in.wc. (pa)	0.09 (22.5)	0.11 (26.2)	0.22 (55.0)
Fluid	P-Glycol (50%)	P-Glycol (50%)	P-Glycol (50%)
Entering Temperature, °F (°C)	180.0 (82.2)	180.0 (82.2)	180.0 (82.2)
Leaving Temperature, °F (°C)	144.1 (62.3)	152.3 (66.8)	150.4 (65.8)
Flow Rate, GPM (l/s)	0.60 (0.038)	0.50 (0.032)	1.30 (0.082)
Fouling factor allowance, h.ft^2.°F/Btu	0.0001	0.0001	0.0001
Tube Velocity, FPS (m/s)	0.5 (0.15)	0.8 (0.26)	0.7 (0.22)
Pressure Drop, ft.wc. (kpa)	0.6 (1.7)	0.1 (0.4)	0.6 (1.9)
Drain Pan Length, in (mm)	-	-	-
No. of Mid. Pan	-	-	-
Notes	3,4,9	3,4	3,4

Notes:

[3] Coil is NOT certified by AHRI.

[4] Fluid inlet and outlet connections are located on the same end.

[9] Air entering temperature is below its freezing point.

Coil material: Copper tube and aluminium fin

1/2" copper tube have 0.016" wall thickness

5/8" copper tube have 0.018" wall thickness

Submitted By: BGP Date: 6/19/2018

20

Mécanique Nordique
Plumbing
Heating
Ventillation
mecanique.nordique@hotmail.com
1255 Rue J.A.Bombardier Lévis QC G7A 2P4
Tél : (418) 496-1109 Fax : (418) 496-3803

REVIEWED BY CONTRACTOR
Kudlik Construction Ltd.
NAME: Sandra Rousseau P.Eng
DATE: Jun 28, 2018

IQUALUIT WWTP UPGRADES

DRAWING FOR APPROVAL

ENGINEER: **NUNAMI STANTEC LIMITED**

DRAWING #: AD-020

This shop drawing stamp applies to the following shop drawings:
- PPP SC-100CC Water Hammer Arrestor
- SFI-100 flow indicator
- Watts LF25AUB-Z3 Pressure Reducing Valve
- Watts LFM115 Pressure Reducing Control Valve
- Watts LF009 Reduced Pressure Zone Assemblies
- Watts 957N Reduced Pressure Zone Assemblies
- Watts 909AGF Air gap

Section : 22 42 01
Article : 2.5 & 2.7
Plans : M603
Application : PLUMBING SPECIALTIES AND ACCESSORIES
Brand : PPP INC , WATTS ,
Model :
Revised # :
Supplyer : WOLSELEY

Date : **27/06/2018**

By : Martin Boucher

STANTEC PROJECT #: 110126045
SUBMITTAL # AD-020

This review by Stantec is for general conformance with the design concept of Stantec's design of the:
☐ Architectural ☐ Electrical
☐ Structural ☐ Other
☑ Mechanical

component(s) only and does not mean that Stantec has verified or approves the shop drawing(s). The Contractor remains solely responsible for the shop drawing(s) and this review by Stantec does not relieve the Contractor of the Contractor's responsibility for errors or omissions in the shop drawing(s) or for meeting all requirements of the contract documents. This review does not mean that Stantec approves the detailed design inherent in the shop drawing, responsibility for which shall remain with the Contractor submitting same, nor does this review mean that Stantec accepts any deviation of the shop drawing(s) from the contract documents. The Contractor is responsible for confirming all dimensions and correlating them at the job site, for all construction means, methods and techniques, and for coordination of construction work of all trades, including coordination of all shop drawings.

Stantec

☑ REVIEWED
☐ REVIEWED, AS NOTED
☐ REVISE AND RESUBMIT
☐ NOT REVIEWED

DATE 2018-07-04
BY Brendan Zrum, P.Eng

Precision Plumbing Products
"Specify with Confidence - Install with Pride"®

LEAD FREE

THREADED WATER HAMMER ARRESTORS

www.pppinc.net

SPEC 22 42 01 2.5

ONLY ONE MOVING PART!

WATER HAMMER ARRESTORS ARE SPECIFIED FOR COMMERCIAL, INDUSTRIAL AND RESIDENTIAL USES.

ON DRAWING M603
DHW & NPW SYSTEM

PPP WATER HAMMER ARRESTORS SPECIFIED FOR MANY INSTALLATIONS!



A maintenance-free installation is assured when using this type of arrestor...the only moving part is the free-moving piston furnished with "O"ring seals which have been tested for reliability in excess of normal operating ranges.

SC-500A - SC-2000F

FLUID HAMMER IN FLUID TRANSMISSION LINES – a definition.
Fluid Hammer is a series of hydraulic shock waves generated within the confines of a piping system due to the sudden stopping of fluid flow. This condition is caused by fast closing of positive valves incorporated within the system. The effect of fluid hammer is damaging if allowed to exist for any length of time and will result in broken pipes and damage to other components in the system.

U.S. Patent No. 3,633,627

40 Years of outstanding performance

LIMITED SBCCI PST&ESI
Low Lead UPC®
Complies with low lead law.
ASSE 1010
Made in the U.S.A. We do not export jobs.
ISO AMERICAN GLOBAL STANDARDS 14001 CERTIFIED-GREEN
ISO AMERICAN GLOBAL STANDARDS 9001 CERTIFIED

SPECIFICATIONS & INSTALLATIONS



A

B

INSTALLATION: May be installed in new or existing plumbing systems with a standard pipe tee.
MAINTENANCE: Maintenance free – the piston is the only moving part.
TEMPERATURE RANGE: -40º F to + 212º F (-4.4º C to + 100º C)
CONSTRUCTION: Barrel-fabricated of type "L" hard drawn copper.
Cap: Copper or free turning brass.
Piston: Machined of Composite Material
Threaded Adapter: Machined of C69300 Low Lead Brass
Seals: "O"rings: EPDM.
Seal Lubricant: Dow-Corning Silicone Compound #111, FDA listed for use in potable water systems.
Nickel Plated: For Salt Water Application.
OPERATING PRESSURE: Designed to operate on all domestic and commercial systems.
Normal operating pressure 0 to 80 PSIG. Max spike pressure 400 PSIG. System Pressures above 80 PSI consult factory.

SIZING INFORMATION

For equipment and fixtures not listed below, size in accordance with load values (WSFU) assigned the same.

Extract from: PDI WH201-06

FIXTURE	TYPE OF SUPPLY CONTROL	WEIGHT IN FIXTURE UNITS			
		Public		Private	
		C.W.	H.W.	C.W.	H.W
Water Closet	Flush Valve	8	-	5	-
Water Closet	Flush Tank	5	-	2.5	-
Pedestal Urinal	Flush Valve	4	-	-	-
Stall or Wall Urinal	Flush Valve	4	-	-	-
Lavatory	Faucet	1 1/2	1 1/2	1	1
Bathtub	Faucet	2	3	1 1/2	1 1/2
Shower Head	Mixing Valve	2	3	1	2
Bathroom Group	Flush Valve Closet	-	-	8	3
Bathroom Group	Flush Tank Closet	-	-	6	3
Separate Shower	Mixing Valve	-	-	1	2
Service Sink	Faucet	3	3	-	-
Laundry Tubs (1-3)	Faucet	-	-	3	3
Comb. Fixture	Faucet	-	-	3	3

PDI SIZING AND SELECTION TABLE

PIPE SIZE	FIXTURE UNITS	CROSS REF. PDI
1/2"	1-11	A
3/4"	12-32	B
1"	33-60	C
1 1/4"	61-113	D
1 1/2"	114-154	E
2'"	155-330	F

Extract from: PDI WH201

NO ACCESS PANEL REQUIRED (CONSULT LOCAL CODES)

DIMENSIONAL AND AIR LOADING DATA

PART NUMBER	A OAL	B NPT	NITROGEN PRELOAD PSI
SC-500A	6 1/4"	1/2" brass	60
SC-750B	7 1/4"	3/4" brass	60
SC-1000C	9 1/4"	1" brass	60
SC-1250D	9 1/2"	1" brass	60
SC-1500E	11 1/4"	1" brass	60
SC-2000F	12"	1" brass	60

PROJECT SUBMITTAL

Project: _____

Contractor: _____

Engineer: _____

Date Submitted: _____

Prepared By: _____

Precision Plumbing Products
Division of JL Industries, Inc.

802 SE 199th Avenue
Portland, Oregon 97233

T (503) 256-4010
F (503) 253-8165

www.pppinc.net

Complies with low lead law.

Made in the U.S.A. We do not export jobs.

TAG: SIGHT FLOW INDICATOR ON WATER SERVICE RECIRC 2" DRAWING M603

W. E. Anderson®

Series
SFI-100, SFI-300, SFI-350,
SFI-360, SFI-400, SFI-700

MIDWEST Sight Flow Indicators

Inexpensive Protection for Expensive Equipment and Systems



MODEL 100, 100MP



MODEL 300, 300MP



MODEL 360F



MODEL 400



MODEL 700

Patent No. 5,103,757

Midwest Sight Flow Indicators are manufactured of quality materials and safety tested to assure long, dependable service at economical prices. Available in window viewing style in the 100 and 300 Series and tube viewing style in the 400 and 700 Series with connection choices of female NPT, BSPP, or BSPT threaded and flanged. Series 700 has impeller and internal wipers for cleaning sight tube, which is perfect for fluids with suspended solids. Just rotate the glass tube and restore full 360° visibility without disrupting the flow.

Models

- 100 - Single window with impeller
- 300 - Double window with impeller
- 350 - Double window with no indicator
- 360 - Double window with flapper
- 400 - Tube type with no indicator
- 700 - Tube type with impeller and internal wipers to clean glass tube

Sight Flow Indicator Dimensions and Weight

Model Number	Body Size	Length	Depth	Height	Flange Diameter	Viewing Area Diameter	Weight lbs (kg)
100 Series	1/4, 3/8	3.000 (76)	1.813 (46)	2.125 (54)	-		1.1 (0.5)
	1/2, 3/4	4.000 (102)	2.250 (57)	2.563 (65)	-	-	1.5 (0.7)
	1, 1-1/4	4.375 (111)	2.563 (65)	2.625 (67)	-	-	2.7 (1.2)
	1-1/2, 2	5.688 (144)	3.250 (830)	3.625 (83)	-	-	5.5 (2.5)
300 Series	1/4, 3/8	3.063 (78)	2.250 (57)	2.125 (54)	-	-	1.7 (0.8)
	1/2, 3/4	4.063 (103)	2.750 (70)	2.563 (65)	-	-	2.6 (1.2)
	1, 1-1/4	4.375 (111)	3.125 (79)	2.563 (65)	-	-	3.0 (1.4)
	1-1/2, 2	5.500 (140)	3.688 (93)	4.063 (103)	-	-	7.0 (3.2)
700 Series	1/4, 3/8	2.750 (70)	-	1.500 (38)	-	-	0.9 (0.4)
	1/2, 3/4	3.688 (94)	-	2.250 (57)	-	-	2.4 (1.1)
	1, 1-1/4, 1-1/2	4.875 (124)	-	2.750 (70) (across flats)	-	-	5.1 (2.3)
400 Series	1/2	4.500 (144)	-		3.500 (89)	1.500 (38)	3.8 (1.7)
	3/4	5.125 (130)	-	-	3.875 (98)	1.750 (44)	4.8 (2.2)
	1	5.625 (143)	-	-	4.250 (108)	2.000 (51)	6.2 (2.8)
	1-1/4	5.750 (146)	-	-	4.625 (117)	2.000 (51)	7.6 (3.5)
	1-1/2	5.875 (149)	-		5.000 (127)	2.500 (64)	8.7 (4.0)
	2	6.125 (156)	-	-	6.000 (152)	3.000 (76)	13 (6.0)
	3	6.250 (159)	-	-	7.500 (191)	4.000 (102)	17 (7.7)
	4	6.250 (159)	-	-	9.00 (229)	5.000 (127)	25 (11.0)
400F Series	1	5.000 (127)	-	-	4.250 (108	2.000 (51)	7 (3.2)
	1-1/4	5.125 (130)	-	-	4.625 (117)	2.000 (51)	8 (3.6)
	1-1/2	5.250 (133)	-	-	5.000 (127)	2.500 (64)	12 (5.4)
	2	5.370 (137)	-	-	6.000 (152)	3.000 (76)	14 (6.4)
	3	5.750 (146)	-	-	7.500 (191)	4.000 (102)	23 (10.4)
	4	5.750 (146)	-	-	9.000 (229)	5.000 (127)	31 (14.1)
300F Series	1-1/2	6.375 (162)	-	-	5.000 (127)	2.313 (58)	12 95.5)
	2	6.500 (165)	-	-	6.000 (152)	2.313 (58)	16 (7.5)
	3	8.875 (225)	-	-	7.500 (191)	3.000 (76)	38 (17)
	4	10.250 (260)	-	-	9.000 (229)	4.000 (102)	56 (25)
	6	12.500 (318)	-	-	11.000 (279)	6.000 (152)	120 (55)

Dimensions are in inches (mm)

SFI-100 & SFI-300 SERIES
Window Style with Threaded Connections

SPECIFICATIONS
Service: Compatible gases and liquids.
Wetted Materials: Window: Tempered glass. Body: Bronze or 316 SS. Gasket: Buna-N, Fluoroelastomer, or PTFE. Indicator: ABS or 316 SS impeller (100 and 300), 304 SS or 316 SS Flapper (360).
Temperature Limit: 200°F (93°C).
Pressure Limit: 125 psig (8.62 bar), 150 psig (10.34 bar) on "MP" Models.
Connections: Threaded.

Example	SFI	300	SS	2	G2	SFI-300SS-2-G2 Sight Flow Indicator; double window, temper glass, Fluoroelastomer gaskets, 316SS body, ABS impeller, 2 inch female NPT connections.
Model Designator	SFI					Sight flow indicator, tempered glass standard, Buna-N gaskets standard, female NPT connections standard.
Body Style		100 300 350 360				Single window, bronze body, ABS Impeller Double window, bronze body, ABS Impeller Double window, bronze body, no moving indicator Double window, bronze body, 304SS flapper
Body Options			SS MP			316SS body option for 300, 350, 360 150 psig maximum pressure option, includes Fluoroelastomer gaskets
Body Size				1/4 3/8 1/2 3/4 1 1-1/4 1-1/2 2		1/4 inch connection size 3/8 inch connection size 1/2 inch connection size 3/4 inch connection size 1 inch connection size 1-1/4 inch connection size 1-1/2 inch connection size 2 inch connection size
Options					W2 G1 G2 S2 S3 I1 I2 I3 F1 BSPT BSPP	Plexiglass window PTFE gasket Fluoroelastomer gasket 316SS Shaft (Not on 350 Model) Monel Shaft (Not on 350 Model) ABS impeller with bronze bushing (Not on 350, 360) 316SS impeller (Not on 350, 360) No impeller (100 only) 316SS Flapper (360 only) BSPT threads BSPP threads

(Maximum flow on impeller models: 5FPS with liquids, 5000 FPM with gases)

SFI-700 SERIES
Tube Style with Threaded Connections

SPECIFICATIONS
Service: Compatible gases and liquids.
Wetted Materials: Tube: Tempered Borosilicate. Body: Brass or 316 SS. Gasket: Fluoroelastomer. Indicator: Acetal.
Temperature Limit: 212°F (100°C).
Pressure Limit: 230 psig (15.86 bar).
Connections: Threaded.

Example	SFI	700SS	1-1/2		SFI-700SS-1-1/2 Sight Flow Indicator; tube type with 8 blade Acetal impeller and integral wipers to clean tube interior, tempered borosilicate tube, Fluoroelastomer gaskets, 316SS body, 1-1/2 inch female NPT connections
Model Designator	SFI				Sight flow indicator, tube type with 8 blade Acetal impeller and integral wipers to clean tube interior, tempered borosilicate tube, Fluoroelastomer gaskets
Body Style		700 700SS			Brass body 316SS body
Body Size			1/4 3/8 1/2 3/4 1 1-1/4 1-1/2		1/4 inch female NPT connection size 3/8 inch female NPT connection size 1/2 inch female NPT connection size 3/4 inch female NPT connection size 1 inch female NPT connection size 1-1/4 inch female NPT connection size 1-1/2 inch female NPT connection size
Options				BSPT BSPP	BSPT threads BSPP threads

SFI-300F SERIES
Window Style with Flanged Connections

SPECIFICATIONS
Service: Compatible gases and liquids.
Wetted Materials: Window: Tempered glass. Body: Carbon Steel or 316 SS. Gasket: Buna-N, Fluoroelastomer, or PTFE. Indicator: 316 SS Flapper (360).
Temperature Limit: 200°F (93°C).
Pressure Limit: 150 psig (10.34 bar).
Connections: Flanged.

Example	SFI	360FSS	1-1/2	G1	SFI-360FSS-1-1/2-G1 Sight Flow Indicator; double window, tempered glass, PTFE gasket, 316SS body, 304SS flapper, 1-1/2 inch raised face flange connections
Model Designator	SFI				Sight flow indicator, double window, tempered glass, Buna-N gaskets standard, raised face flange connections
Body Style		350FCS 350FSS 360FCS 360FSS			Carbon steel body, no moving indicator 316SS body, no moving 316SS indicator Carbon steel body, 316SS flapper 316SS body, 316SS flapper
Body Size			1-1/2 2 3 4 6		1-1/2 inch raised face flange connection size 2 inch raised face flange connection size 3 inch raised face flange connection size 4 inch raised face flange connection size 6 inch raised face flange connection size
Options				G1 G2	PTFE gasket Fluoroelastomer gasket

SFI-400 SERIES
Tube Style with Threaded or Flanged Connections

SPECIFICATIONS
Service: Compatible gases and liquids.
Wetted Materials: Tube: Borosilicate. Body: Cast Iron or 316 SS. Gasket: PTFE.
Temperature Limit: 200°F (93°C).
Pressure Limit: 50 psig (3.45 bar).
Connections: Threaded or Flanged.

Example	SFI	400	1-1/2	SFI-400SS-1-1/2 Sight Flow Indicator; tube type, borosilicate tube, PTFE gaskets, 316SS body, 1-1/2 inch female NPT connections
Model Designator	SFI			Sight flow indicator, tube type, borosilicate tube, PTFE gaskets
Body Style		400CI 400SS 400F		Female NPT connections, cast iron body (only for 1 through 2 inch sizes) Female NPT connections, 316SS body Raised face flange connection, 316SS body (only for 1 inch and up sizes)
Body Size			1/2 3/4 1 1-1/4 1-1/2 2 3 4	1/2 inch connection size 3/4 inch connection size 1 inch connection size 1-1/4 inch connection size 1-1/2 inch connection size 2 inch connection size 3 inch connection size 4 inch connection size

(Best for use in vertical pipelines where there are no mechanical strains)

TAG: SECTION 22 42 01 PRESSURE REDUCING VALVE

ES-LF25AUB

For Residential and Commercial Applications

Job Name WASTE WATER TREAMENT

Job Location IQUALUIT NUNAVUT

Engineer NUNAMI STANTEC

Approval _____

Contractor _____

Approval _____

Contractor's P.O. No. _____

Representative _____

LEAD FREE*

Series LF25AUB-Z3

Water Pressure Reducing Valves**

Sizes: ½" – 2" (15 – 50mm)

Series LF25AUB-Z3 Water Pressure Reducing Valves are designed to reduce incoming water pressure to a sensible level to protect plumbing system components and reduce water consumption. This series is suitable for water supply pressures up to 300psi (20.7 bar) and may be adjusted from 25 – 75psi (172 – 517 kPa). The LF25AUB-Z3 features Lead Free* construction to comply with Lead Free* installation requirements. The standard setting is 50psi (345 kPa). All parts are quickly and easily serviceable without removing the valve from the line. The standard bypass feature permits the flow of water back through the valve into the main when pressures, due to thermal expansion on the outlet side of the valve, exceed the pressure in the main supply.

Features

- Standard construction includes Z3 sealed spring cage and stainless steel corrosion resistant adjusting & cage screws for accessible outdoor or pit installations
- Union inlet connection
- Integral stainless steel strainer
- Replaceable seat module
- Lead Free* cast copper silicon alloy construction
- Serviceable in line
- Bypass feature controls thermal expansion pressure***
- High temperature resistant reinforced diaphragm for hot water

Models

LF25AUB-Z3	NPT threaded female union inlet x NPT female outlet
LF25AUB-S-Z3	Solder union inlet x NPT female outlet
LF25AUB-DU-Z3	Double Union – NPT threaded union female inlet and outlet
LF25AUB-S-DU-Z3	Double Union – Solder union inlet and outlet
LF25AUB-DU-THDxPEX-Z3	Double Union – NPT threaded female inlet and PEX union outlet
LF25AUB-DU-LF-Z3	Double union body less fittings (¾", 1", 1¼")
LF25AUB-QC-Z3	Single Union – Quick-Connect union inlet (½", ¾", 1")
LF25AUB-DU-QC-Z3	Double Union – Quick-Connect inlet and outlet (½", ¾", 1")

Specifications

A Water Pressure Reducing Valve with integral strainer shall be installed in the water service pipe near its entrance to the building where supply main pressure exceeds 60psi (413 kPa) to reduce it to 50psi (345 kPa) or lower. The water pressure reducing valve shall be constructed using Lead Free* materials. Lead Free* regulators shall comply with state codes and standards, where applicable, requiring reduced lead content. The valve shall feature a Lead Free* cast copper silicon alloy suitable for water supply pressures up to 300psi (20.7 bar). Provision shall be made to permit the bypass flow of water back through the valve into the main when pressures, due to thermal expansion on the outlet side of the valve, exceed the pressure in the main supply. Water Pressure Reducing Valve with built-in bypass check valves will be acceptable. Approved valve shall be listed to ASSE 1003 and IAPMO and certified to CSA B356. Valve shall be a Watts Series LF25AUB-Z3.

LF25AUB-Z3



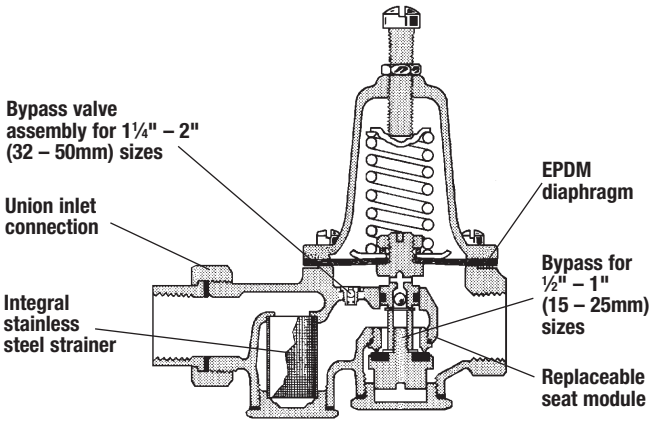

DOMESTIC COLD WATER

*The wetted surface of this product contacted by consumable water contains less than 0.25% of lead by weight.

**A water saving test program concluded that reducing the supply pressure from 80-50psi (551-345 kPa) resulted in a water savings of 30%.

***The bypass feature will not prevent the pressure relief valve from opening on the hot water supply system with pressure above 150psi (10.3 bar).

Watts product specifications in U.S. customary units and metric are approximate and are provided for reference only. For precise measurements, please contact Watts Technical Service. Watts reserves the right to change or modify product design, construction, specifications, or materials without prior notice and without incurring any obligation to make such changes and modifications on Watts products previously or subsequently sold.

WATTS®

TAG: SECTION 22 42 01 PRESSURE REDUCING VALVE

Materials

Body:	Lead Free* copper silicon alloy
Seat:	½"–1" (15–25mm) Replaceable engineered polymer (10% glass filled Noryl®) 1¼"–2" (32–50mm) Replaceable stainless steel
Integral Strainer:	Stainless steel
Diaphragm:	Reinforced EPDM with PTFE wetted surface
Valve Disc:	EPDM

Pressure – Temperature

Temperature Range: 33°F – 160°F (0.5°C – 71°C)
Maximum Working Pressure: 300psi (20.7 bar)
Adjustable Reduced Pressure Range: 25–75psi (172 – 517 kPa)
Standard Reduced Pressure Setting: 50psi (345 kPa)

Options

Add Suffix

G	Gauge tapping, ⅛" (3mm)
GG	Gauge tapping and 160psi (11 bar) gauge
HP	High pressure range 75–125psi (5.2 – 8.6 bar) †
LP	Low pressure range 10–35psi (69 – 241 kPa) †
Z7	400psi (27.6 bar) initial pressure, ½" (20mm) models only

† Not available on G or GG models

Noryl® is a registered trademark of SABIC Innovative Plastics™

Standards

Meets requirements of ASSE Standard 1003: ANSI A112.26.2: CSA Standard B356; Southern Standard Plumbing Code and listed by IAPMO.
Military Standard MIL-V-18146B Type I.

Capacity

Sizes: ½", ¾", 1", 1¼", 1½", 2" (15, 20, 25, 32, 40, 50mm)

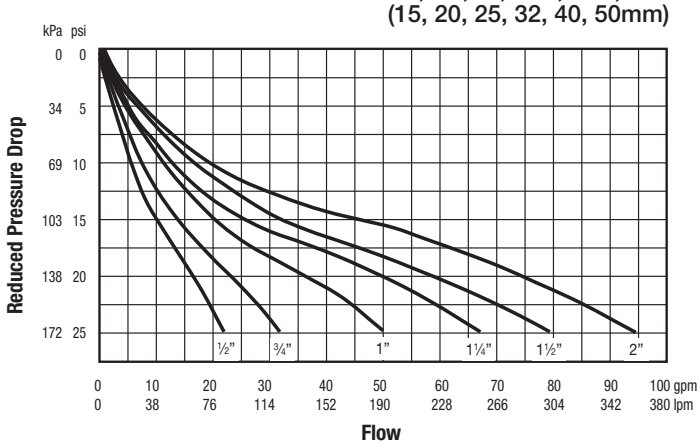

DOMESTIC COLD WATER 2"

Dimensions — Weights

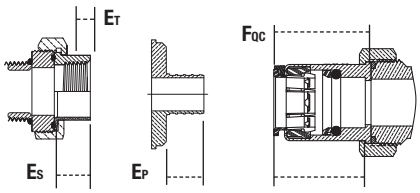

A - LF25AUB-Z3
A1 - LF25AUB-S-Z3
A2 - LF25AUB-DU-LF-Z3
B - LF25AUB-DU-Z3
B1 - LF25AUB-S-DU-Z3
B2 - LF25AUB-DU-THDxPEX-Z3
ET - NPT Engagement for tight joint
ES - Female sweat socket depth
EP - PEX end connection
FQC - Quick-Connect union

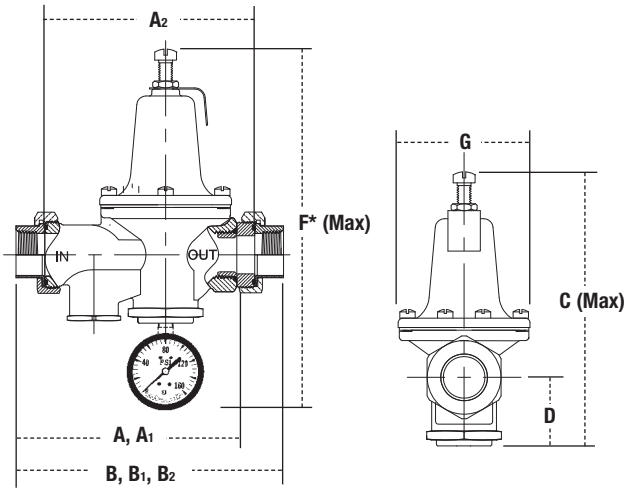

SIZE (DN)		DIMENSIONS													
		A		A1		A2		B		B1		B2		C	
in.	mm	in.	mm	in.	mm	in.	mm	in.	mm	in.	mm	in.	mm	in.	mm
½	15	5⅜	137	5⁵⁄₁₆	135	5³⁄₁₆	132	6⁷⁄₁₆	164	6⅜	162	–	–	7	178
¾	20	5⁵⁄₁₆	135	5½	140	5¼	133	6½	165	6⅞	175	6¾	171	7	178
1	25	6	152	6¼	159	5⅞	149	7⅜	187	7¹³⁄₁₆	198	7¹¹⁄₁₆	195	8	203
1¼	32	8¾	222	8¹⁵⁄₁₆	227	8¼	210	10¾	273	11	279	–	–	9	229
1½	40	8¾	222	9	229	8¼	210	10¾	273	11³⁄₁₆	284	–	–	9½	241
2	50	9¼	235	10	254	8¾	222	11⁵⁄₁₆	287	12¹¹⁄₁₆	322	–	–	11¼	286

SIZE (DN)		DIMENSIONS												WEIGHT	
		D		F Δ		G		ET		ES		EP		FQC			
in.	mm	in.	mm	in.	mm	in.	mm	in.	mm	in.	mm	in.	mm	in.	mm	lbs.	kgs.
½	15	1½	38	9⁷⁄₁₆	240	3⅛	79	½	13	½	13	–	–	1½	38	3.5	1.6
¾	20	1½	38	9⁷⁄₁₆	240	3⅛	79	½	13	¾	19	⅝	16	1¹¹⁄₁₆	42	3.5	1.6
1	25	1¾	44	10⁷⁄₁₆	266	3⅝	92	⅝	16	¹⁵⁄₁₆	23	¹³⁄₁₆	21	1¾	45	6.5	3.0
1¼	32	2⅛	54	11⁷⁄₁₆	291	3⅝	92	⅝	16	1	25	–	–	–	–	10	4.5
1½	40	2⅜	60	11¹⁵⁄₁₆	304	4¹⁄₁₆	103	⅝	16	1¹⁄₁₆	28	–	–	–	–	10	4.5
2	50	3¼	83	13¹¹⁄₁₆	348	4¾	121	⅝	16	1⁵⁄₁₆	34	–	–	–	–	15	6.8

Δ Dimension includes optional gauge

© 2014 Watts

TAG: SECTION 22 42 01 2.6 PRESSURE REDUCING VALVE

Mustang Series

LEAD FREE*

LFM115 (Globe) LFM1115 (Angle)

Pressure Reducing Control Valve

NON-POTABLE WATER 3"

Schematic

- Throttles to reduce high upstream pressure to constant lower downstream pressure
- Reducing setpoint is adjustable

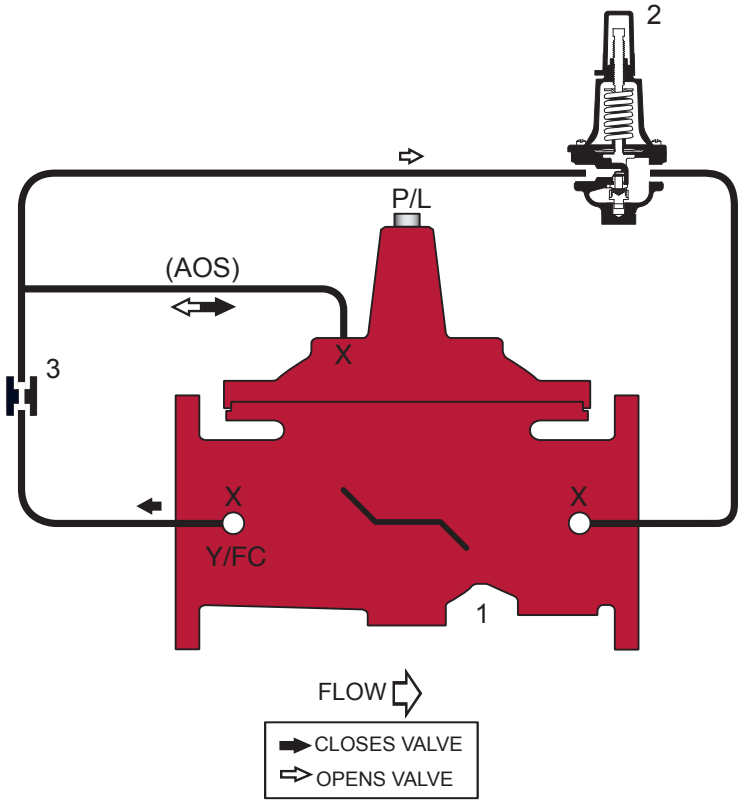

Standard Components

1 – Main Valve (Single Chamber)
2 – Pressure Reducing Control
3 – Fixed Orifice

Options & Accessories

- ○ X – Isolation Cocks *(2)*
- ○ FC – Flo-Clean Strainer *(1)*
- ○ Y – Y-Strainer (Replaces Flo-Clean) *(2)*
- ○ ACS – Adjustable Closing Speed *(3)* (Replaces Fixed Orifice)
- ○ AOS – Adjustable Opening Speed *(1)*
- ○ P – Position Indicator *(3)*
- ○ L – Limit Switch *(3)*

(1) Standard 3" & Smaller
(2) Standard 4" & Larger
(3) Optional All Sizes

Operations

The Watts ACV Pressure Reducing Control Valve is designed to automatically reduce a fluctuating higher upstream pressure to a constant lower downstream pressure regardless of varying flow rates. It is controlled by a normally open, pressure reducing pilot designed to: 1) Open (allowing fluid out of the main valve cover chamber) when downstream pressure is below the adjustable setpoint, and 2) Close (allowing fluid to fill the main valve cover chamber) when downstream pressure is above the adjustable setpoint. A decrease in downstream pressure causes the valve to modulate toward an open position, raising downstream pressure. An increase in downstream pressure causes the valve to modulate toward a closed position, lowering downstream pressure.

***The wetted surface of this product contacted by consumable water contains less than 0.25% of lead by weight.**

Watts product specifications in U.S. customary units and metric are approximate and are provided for reference only. For precise measurements, please contact Watts Technical Service. Watts reserves the right to change or modify product design, construction, specifications, or materials without prior notice and without incurring any obligation to make such changes and modifications on Watts products previously or subsequently sold.

WATTS®

MUSTANG SERIES

LFM115 (Globe)
LFM1115 (Angle)

Materials

Body & Cover:	Ductile Iron ASTM A536
Coating:	NSF Listed Fusion Bonded Epoxy Lined and Coated
Trim:	316 Stainless Steel
Elastomers:	Buna-N (standard) EPDM Viton
Stem, Nut & Spring:	Stainless Steel

Globe

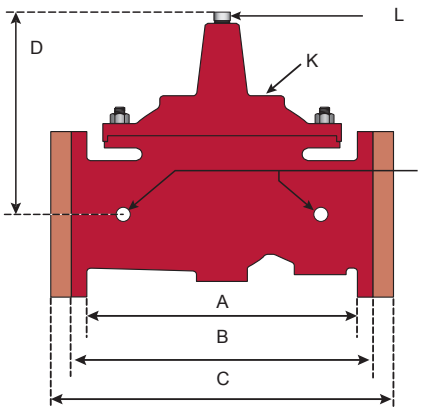

Angle

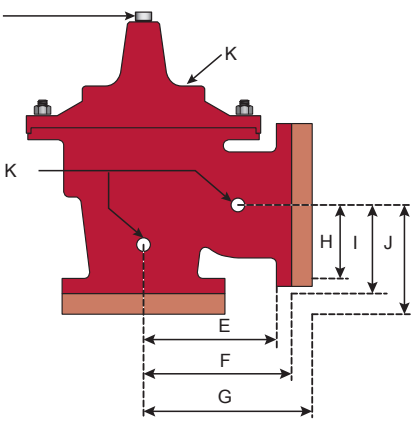

Operating Pressure

Threaded = 400 psi
150 Flanged = 250 psi
300 Flanged = 400 psi

Operating Temperature

Buna-N: 160 °F Maximum
EPDM: 300 °F Maximum
Viton: 250 °F Maximum

Pilot System

Reducing Control
30-300 psi (Standard)
0-30 psi (Optional)

Tubing & Fittings

Copper / Brass (Standard)
Stainless Steel (Optional)

Dimensions

	A	B	C	D	E	F	G	H	I	J	K	L	
VALVE SIZE	GLOBE THRD.	GLOBE 150#	GLOBE 300#	COVER TO CENTER	ANGLE THRD.	ANGLE 150#	ANGLE 300#	ANGLE THRD.	ANGLE 150#	ANGLE 300#	PORT SIZE	PORT SIZE	SHIPPING WEIGHTS*
1-1/4	7-1/4	-	-	5-1/2	3-1/4	-	-	1-7/8	-	-	3/8	1/4	20
1-1/2	7-1/4	8-1/2	9	5-1/2	3-1/4	4	4-1/4	1-7/8	4	4-1/4	3/8	1/4	25
2	9-3/8	9-3/8	10	6-1/2	4-3/4	4-3/4	5	3-1/4	3-1/4	3-1/2	3/8	1/2	40
2-1/2	11	11	11-5/8	7-1/2	5-1/2	5-1/2	5-7/8	4	4	4-5/16	1/2	1/2	65
3	12-1/2	12	13-1/4	8-1/4	6-1/4	6	6-3/8	4-1/2	4	4-3/8	1/2	1/2	95
4	-	15	15-5/8	10-5/8	-	7-1/2	7-7/8	-	5	5-5/16	3/4	3/4	190
6	-	20	21	13-3/8	-	10	10-1/2	-	6	6-1/2	3/4	3/4	320
8	-	25-3/8	26-3/8	16	-	12-3/4	13-1/4	-	8	8-1/2	1	1	650
10	-	29-3/4	31-1/8	17-1/8	-	14-7/8	15-9/16	-	8-5/8	9-5/16	1	1	940
12	-	34	35-1/2	20-7/8	-	17	17-3/4	-	13-3/4	14-1/2	1	1-1/4	1500
14	-	39	40-1/2	24-1/4	-	19-1/2	20-1/4	-	14-7/8	15-5/8	1	1-1/2	1675
16	-	41-3/8	43-1/2	25	-	20-13/16	21-5/8	-	15-11/16	16-1/2	1	2	3100

**Estimated in lbs.*

Valve Cover Chamber Capacity

Valve Size (in)	1-1/4	1-1/2	2	2-1/2	3	4	6	8	10	12	14	16
fl.oz.	4	4	4	10	10	22	70	-	-	-	-	-
U.S. Gal	-	-	-	-	-	-	-	1-1/4	2-1/2	4	6-1/2	9-1/2

Valve Travel

Valve Size (in)	1-1/4	1-1/2	2	2-1/2	3	4	6	8	10	12	14	16
Travel (in)	3/8	3/8	1/2	5/8	3/4	1	1-1/2	2	2-1/2	3	3-1/2	4

Sizing

Size (in)	1-1/4	1-1/2	2	2-1/2	3	4	6	8	10	12	14	16
Maximum Continuous (GPM)	95	130	210	300	485	800	1850	3100	5000	7000	8500	11100
Maximum Intermittent (GPM)	119	161	265	390	590	1000	2300	4000	6250	8900	10800	14100
Minimum Continuous (GPM)												

Maximum continuous flow based on velocity of 20 ft. per second.
Maximum intermittent flow based on velocity of 25 ft. per second.
Minimum continuous flow based on velocity of 1 ft. per second.

NOTE: The above chart is a suggested guide. Inlet pressure, outlet pressure, minumum, normal and maximum flow rates should be considered for specific valve sizing. Contact Watts ACV for details.

Cavitation Chart

After selecting the valve size, locate inlet and outlet pressures on this chart. If the intersection point falls in the shaded area, cavitation can occur. Operation of valves continually in the cavitation zone should be avoided. Consult Watts ACV for alternatives.

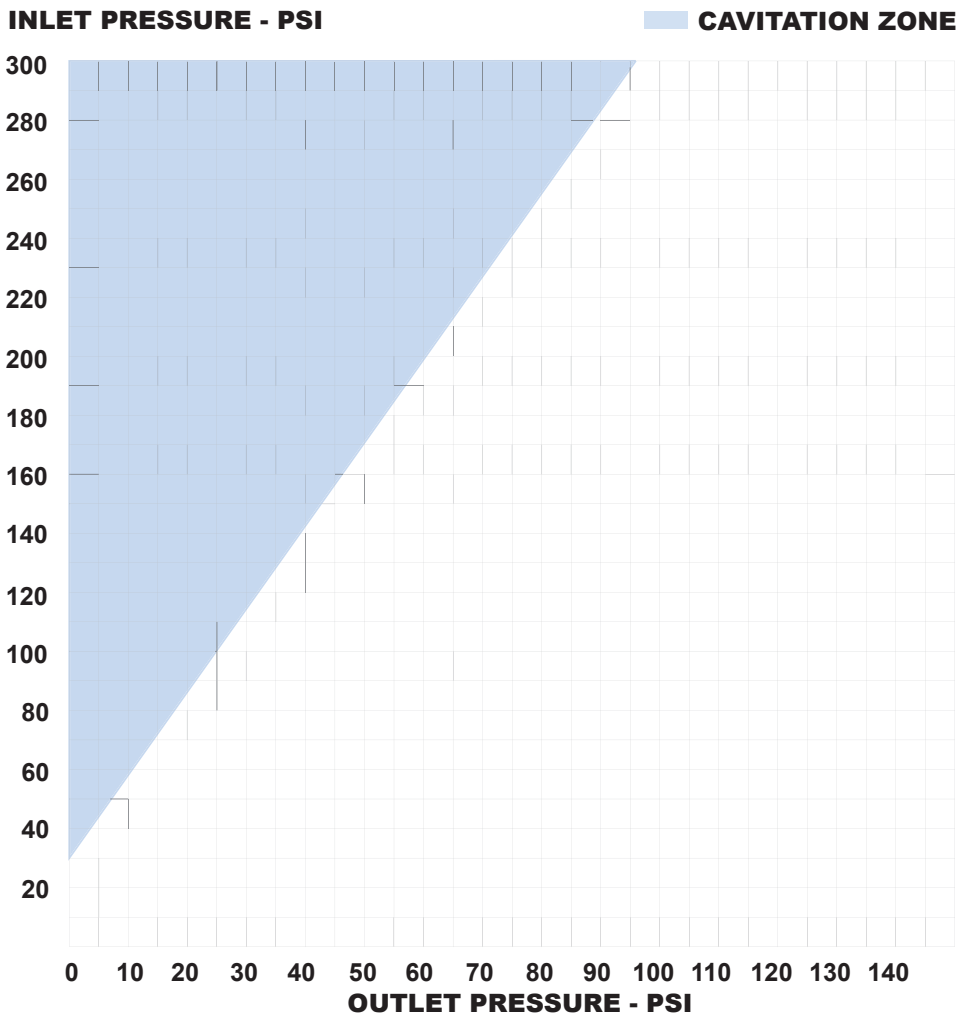

Cross-Sectional Detail

Main Valve

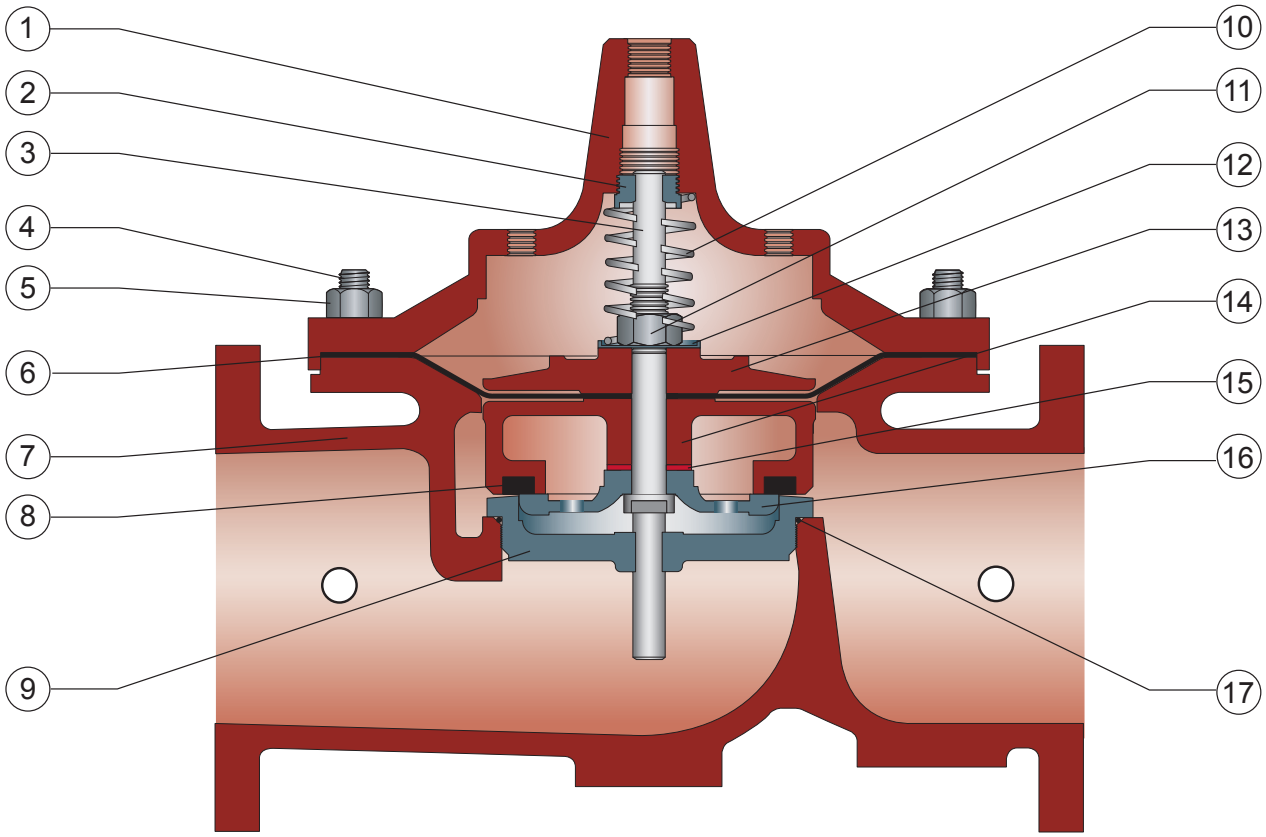

ITEM	DESCRIPTION	MATERIAL
1	Cover	ASTM A536 65-45-12 Epoxy Coated Ductile Iron
2	Cover Bearing	ASTM A276 304 Stainless Steel
3	Shaft / Stem	ASTM A276 304 Stainless Steel
4	Stud	ASTM A570 Gr.33 Zinc Plated Steel
5	Cover Nut	ASTM A570 Gr.33 Zinc Plated Steel
6	**Diaphragm***	Buna-N (Nitrile)
7	Body	ASTM A536 65-45-12 Epoxy Coated Ductile Iron
8	**Seat Disc***	Buna-N (Nitrile)
9	Seat Ring	ASTM A743 CF8M (316) Stainless Steel
10	Spring	ASTM A276 302 Stainless Steel
11	Stem Nut	ASTM A276 304 Stainless Steel
12	Spring Washer	ASTM A276 304 Stainless Steel
13	Diaphragm Washer	ASTM A536 65-45-12 Epoxy Coated Ductile Iron
14	Disc Retainer	ASTM A536 65-45-12 Epoxy Coated Ductile Iron
15	**Spacer Washer***	Fiber*
16	Disc Guide	ASTM A743 CF8M (316) Stainless Steel
17	**Seat Gasket***	Buna-N (Nitrile)

** Contained in Main Valve Repair Kit*

TAG: SECTION 22 42 01 2.6 DAR REDUCED PRESSURE

ES-LF009

For Health Hazard Applications

Job Name WASTE WATER TREAMENT

Job Location IQUALUIT NUNAVUT

Engineer NUNAMI STANTEC

Approval _____

Contractor _____

Approval _____

Contractor's P.O. No. _____

Representative _____

LEAD FREE* ***2 INCHES AND 1-1/4 SECTION 2.7***

Series LF009

Reduced Pressure Zone Assemblies

Sizes: ¼" – 3" (8 – 80mm)

Series LF009 Reduced Pressure Zone Assemblies are designed to protect potable water supplies in accordance with national plumbing codes and water authority requirements. This series can be used in a variety of installations, including the prevention of health hazard cross-connections in piping systems or for containment at the service line entrance.The LF009 features Lead Free* construction to comply with Lead Free* installation requirements.

This series features two in-line, independent check valves, captured springs and replaceable check seats with an intermediate relief valve. Its compact modular design facilitates easy maintenance and assembly access. Sizes ¼" – 1" (8 – 25mm) shutoffs have tee handles.

Features

- Single access cover and modular check construction for ease of maintenance
- Top entry - all internals immediately accessible
- Captured springs for safe maintenance
- Internal relief valve for reduced installation clearances
- Replaceable seats for economical repair
- Lead Free* cast copper silicon alloy body construction for durability ¼" – 2" (8 – 50mm)
- Fused epoxy coated cast iron body 2½" and 3" (65 and 80mm)
- Ball valve test cocks — screwdriver slotted ¼" – 2" (8 – 50mm)
- Large body passages provides low pressure drop
- Compact, space saving design
- No special tools required for servicing

Specifications

A Reduced Pressure Zone Assembly shall be installed at each potential health hazard location to prevent backflow due to backsiphonage and/or backpressure. The assembly shall consist of an internal pressure differential relief valve located in a zone between two positive seating check modules with captured springs and silicone seat discs. Seats and seat discs shall be replaceable in both check modules and the relief valve. There shall be no threads or screws in the waterway exposed to line fluids. Service of all internal components shall be through a single access cover secured with stainless steel bolts. Body and shutoffs shall be constructed using Lead Free* cast copper silicon alloy materials. Lead Free* reduced pressure zone assembly shall comply with state codes and standards, where applicable, requiring reduced lead content.

The assembly shall also include two resilient seated isolation valves, four resilient seated test cocks and an air gap drain fitting. The assembly shall meet the requirements of: USC; ASSE Std. 1013; AWWA Std. C511; CSA B64.4. Shall be a Watts Series LF009.



LF009

2" ON DOMESTIC COLD WATER
1 1/4 " DOMESTIC HOT WATER

DRAWING M603

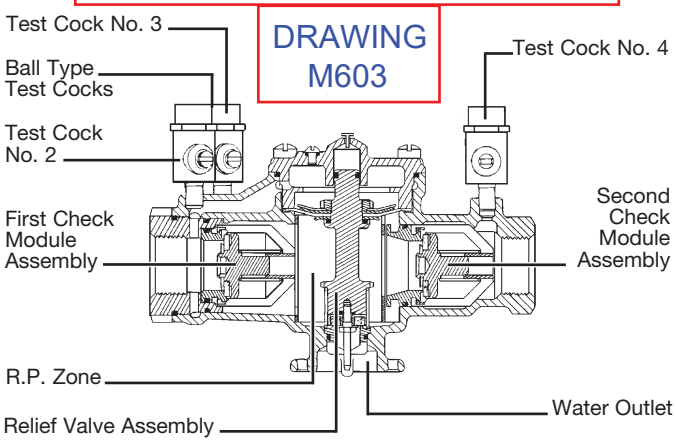

Now Available
WattsBox Insulated Enclosures.
For more information, send for literature ES-WB.

NOTICE

Inquire with governing authorities for local installation requirements

NOTICE

The information contained herein is not intended to replace the full product installation and safety information available or the experience of a trained product installer. You are required to thoroughly read all installation instructions and product safety information before beginning the installation of this product.

***The wetted surface of this product contacted by consumable water contains less than 0.25% of lead by weight.**

Watts product specifications in U.S. customary units and metric are approximate and are provided for reference only. For precise measurements, please contact Watts Technical Service. Watts reserves the right to change or modify product design, construction, specifications, or materials without prior notice and without incurring any obligation to make such changes and modifications on Watts products previously or subsequently sold.

WATTS®

TAG: SECTION 22 42 01 2.6 DAR REDUCED PRESSURE

Available Models: ¼" – 2" (8 – 50mm)

Suffix:

QT – quarter-turn ball valves
S – strainer
LF – without shutoff valves
PC – internal polymer coating

Prefix:

U – union connections

Available Models: 2½" – 3" (65 – 80mm)

Suffix:

NRS – non-rising stem resilient seated gate valves
OSY – UL/FM outside stem and yoke resilient seated gate valves
S-FDA – FDA epoxy coated strainer
QT-FDA – FDA epoxy coated quarter-turn ball valves
LF – without shutoff valves

Note: The installation of a drain line is recommended. When installing a drain line, an air gap is necessary (see ES-AG).

Materials: ¼" – 2" (8 – 50mm)

Lead Free* cast copper silicon alloy body construction, silicone rubber disc material in the first and second check plus the relief valve. Replaceable polymer check seats for first and second checks. Removable stainless steel relief valve seat. Stainless steel cover bolts.

Standardly furnished with NPT body connections.
Model LF009QT furnished with quarter-turn, full port, resilient seated, Lead Free* cast copper silicon alloy body ball valve shutoffs.

Materials: 2½" and 3" (65 – 80mm)

- (FDA approved) Epoxy coated cast iron unibody with plastic seats
- Relief valve with stainless steel seat and trim
- Lead Free cast copper silicon alloy body ball valve test cocks

Pressure / Temperature

Sizes ¼" – 2" (8 – 50mm) Suitable for supply pressure up to 175psi (12 bar). Water temperature: 33°F – 180°F (0.5° – 75°C).

Sizes 2½" and 3" (65 and 80mm) are suitable for supply pressures up to 175psi (12.1 bar) and water temperature at 110°F (43°C) continuous, 140°F (60°C) intermittent.

Standards

USC
ASSE No. 1013
AWWA C511
CSA B64.4
IAPMO File No. 1563.

Approvals

ASSE, AWWA, CSA, IAPMO

Approved by the Foundation for Cross-Connection Control and Hydraulic Research at the University of Southern California.

Approval models QT, PC, NRS, OSY.

UL Classified
2½" and 3" (65 and 80mm) with OSY gate valves.
¾" - 2" (20-50mm) without shutoff valves (-LF) (except LF009M3LF)

Air Gaps and Elbows

MODEL		DRAIN OUTLET		DIMENSIONS A		DIMENSIONS B		WEIGHT	
	for 909, 009 and 993 sizes	in.	mm	in.	mm	in.	mm	lbs.	kgs.
909AGA	¼"–½" 009, ¾" 009M2/M3	½	13	2⅜	60	3⅛	79	0.625	0.28
909AGC	¾"–1" 009/909, 1"–1½" 009M2	1	25	3¼	83	4⅞	124	1.5	0.68
→ 909AGF	1¼"–2" 009M1, 1¼"–3" 009/909, 2" 009M2, 4"–6" 993	2	51	4⅜	111	6¾	171	3.25	1.47
909AGK	4"–6" 909, 8"–10" 909M1	3	76	6⅜	162	9⅝	244	6.25	2.83
909AGM	8"–10" 909	4	102	7⅜	187	11¼	286	15.5	7.03
909ELA	¼"–½" 009, ¾" 009M2/M3	–	–	–	–	–	–	–	–
909ELC	¾"–1" 009/909	–	–	2⅜	60	2⅜	60	0.38	0.17
* 909ELF	1¼"-2" 009M1, 1¼"–2" 009/909, 2" 009M2, 4"–6" 993	–	–	3⅝	92	3⅝	92	2	0.91
* 909ELH Vertical	2½"–3" 009/909	–	–	–	–	–	–	–	–

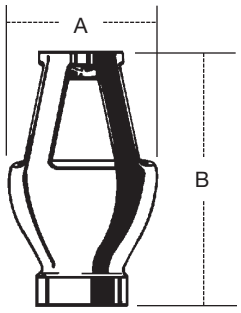

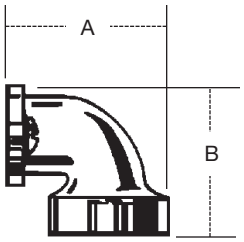

Dimensions and Weight: ¼" – 2" (8 – 50mm) LF009

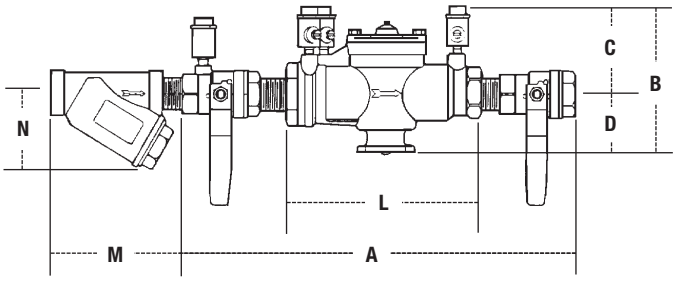

LF009 ¼" – 2"

SIZE (DN)		DIMENSIONS (APPROX.)														WEIGHT	
		A		B		C		D		L		M		N			
in.	mm	in.	mm	in.	mm	in.	mm	in.	mm	in.	mm	in	mm	in	mm	lbs.	kgs.
¼	8	10	250	4⅝	117	3⅜	86	1¼	32	5½	140	2⅜	60	2½	64	5	2
⅜	10	10	250	4⅝	117	3⅜	86	1¼	32	5½	140	2⅜	60	2½	64	5	2
½	15	10	250	4⅝	117	3⅜	86	1¼	32	5½	140	2¾	70	2¼	57	5	2
¾	20	10¾	273	5	127	3½	89	1½	38	6¾	171	3 3/16	81	2¾	70	6	3
1	25	14½	368	5½	140	3	76	2½	64	9½	241	3¾	95	3	76	12	5
1¼	32	17⅜	441	6	150	3½	89	2½	64	11⅜	289	4 7/16	113	3½	89	15	6
1½	40	17⅞	454	6	150	3½	89	2½	64	11⅛	283	4⅜	124	4	102	16	7
2	50	21⅜	543	7¾	197	4½	114	3¼	83	13½	343	5 5/16	151	5	127	30	13

2.7

Dimensions and Weight: 2½" and 3" (65 and 80mm) LF009

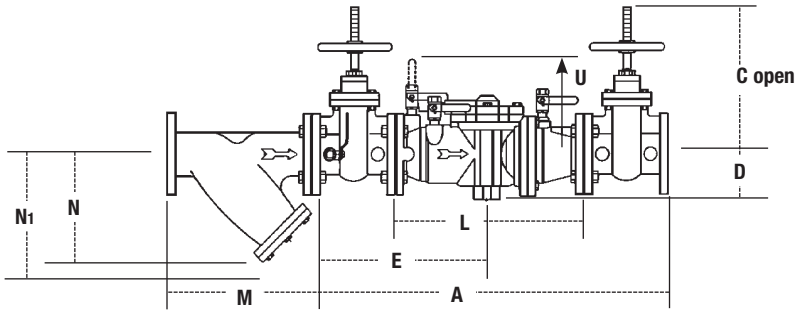

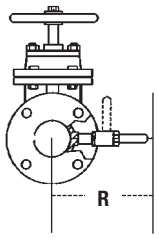

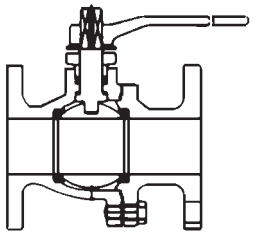

Watts G-4000 Series
QT – Ball Valves

STRAINER SIZE		DIMENSIONS (APPROX.)						WEIGHT	
		M		N		N1†			
in.	mm	in.	mm	in.	mm	in.	mm	lbs.	kgs.
2½	65	10	254	6½	165	9¾	248	28	12.7
3	80	10⅛	257	7	178	10	254	34	15.4

†Clearance for servicing

MODEL	SIZE DN		DIMENSIONS (APPROX.)														WEIGHT	
			A		C		D		E		L		R		U			
	in.	mm	in.	mm	in.	mm	in.	mm	in.	mm	in.	mm	in.	mm	in.	mm	lbs.	kgs.
LF009LF	2½	65	—	—	—	—	4½	114	—	—	18⅛	460	—	—	10⅝	270	76	34.5
LF009OSY	2½	65	33¼	845	15⅞	403	4½	114	16⅜	416	18⅛	460	7¾	197	10⅝	270	166	75.3
LF009NRS	2½	65	33¼	845	11⅜	289	4½	114	16⅜	416	18⅛	460	7¾	197	10⅝	270	161	73.0
LF009QTFDA	2½	65	33¼	845	6	152	4½	114	16⅜	416	18⅛	460	7¾	197	10⅝	270	150	68.0
LF009LF	3	80	—	—	—	—	4½	114	—	—	18⅛	460	—	—	10⅝	270	76	34.5
LF009OSY	3	80	34¼	870	18½	470	4½	114	16⅝	422	18⅛	460	8¾	222	10⅝	270	198	89.8
LF009NRS	3	80	34¼	870	12¾	324	4½	114	16⅝	422	18⅛	460	8¾	222	10⅝	270	191	86.6
LF009QTFDA	3	80	34¼	870	7	178	4½	114	16⅝	422	18⅛	460	8¾	222	10⅝	270	158	71.7

Capacity

Performance as established by an independent testing laboratory.

*Typical maximum system flow rate (7.5 feet/sec., 2.3 meters/sec.)

¼" (8mm) LF009QT

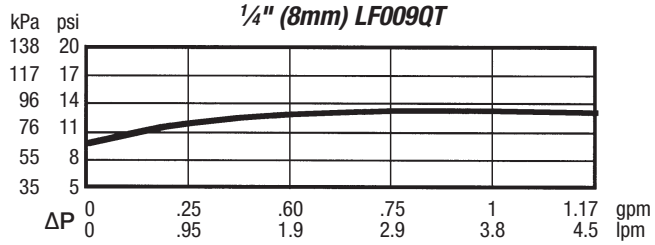

⅜" (10mm) LF009QT

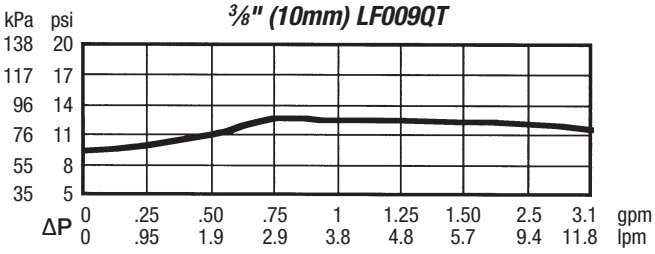

½" (15mm) LF009QT

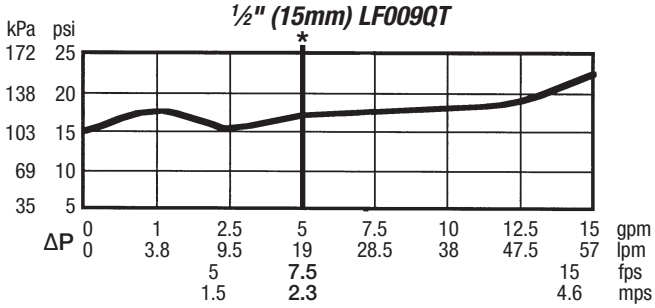

¾" (20mm) LF009M3QT

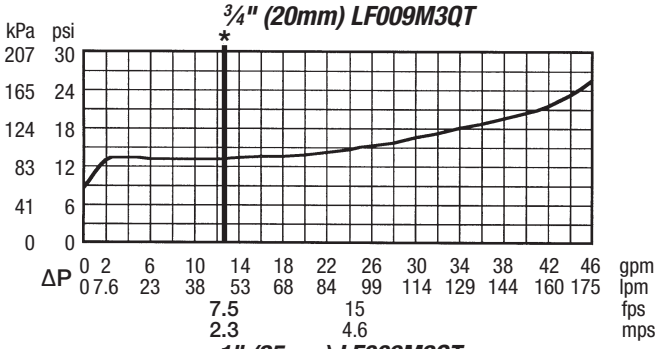

1" (25mm) LF009M2QT

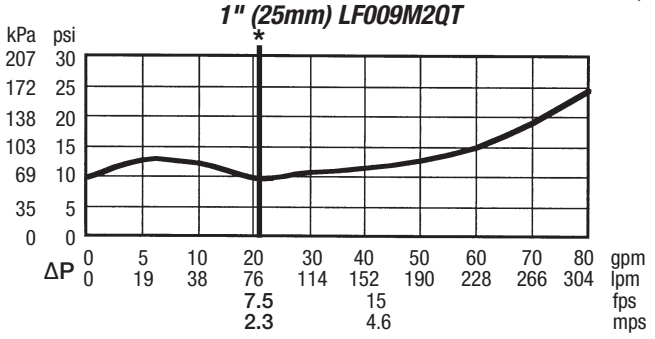

1¼" (32mm) LF009M2QT

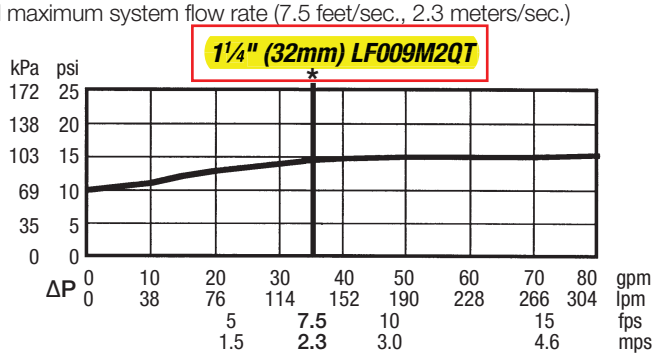

1½" (40mm) LF009M2QT

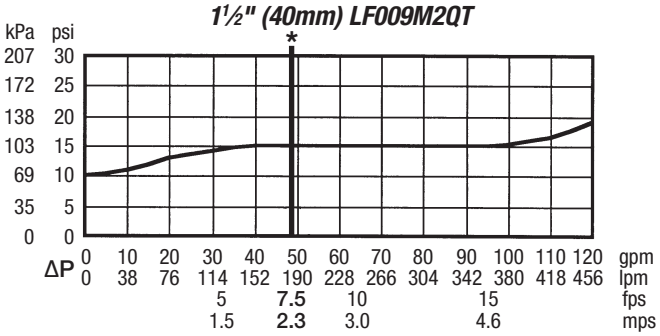

2" (50mm) LF009M2QT

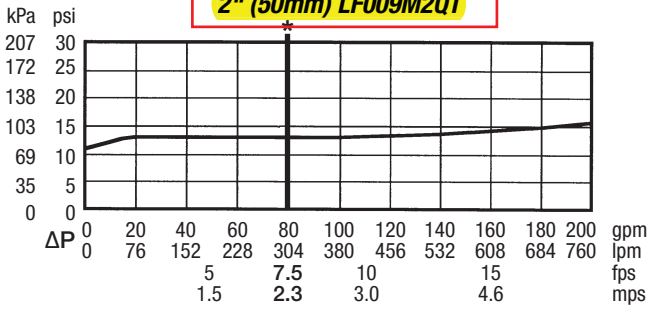

2½" (65mm) LF009

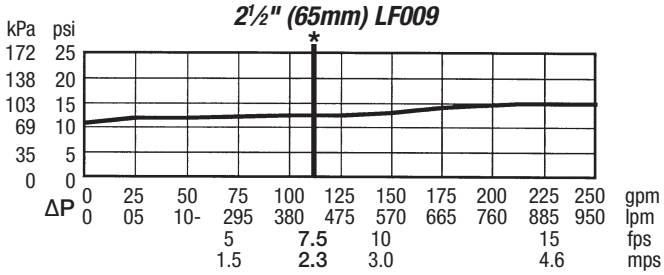

3" (80mm) LF009

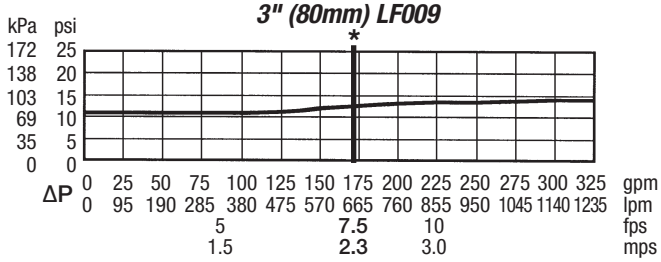

© 2014 Watts

Air Gaps, Elbows and Test Cocks

Job Name _____ Contractor _____

Job Location _____ Approval _____

Engineer _____ Contractor's P.O. No. _____

Approval _____ Representative _____

Air Gaps, Elbows and Test Cocks

for Reduced Pressure Zone Assemblies

REVIEWED BY MV

Air Gaps

An air gap provides the unobstructed, physical separation between the discharge end of a potable water supply line and an open receiving vessel.

The installation of an air gap and drain line are recommended.

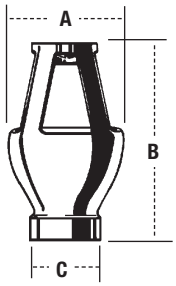

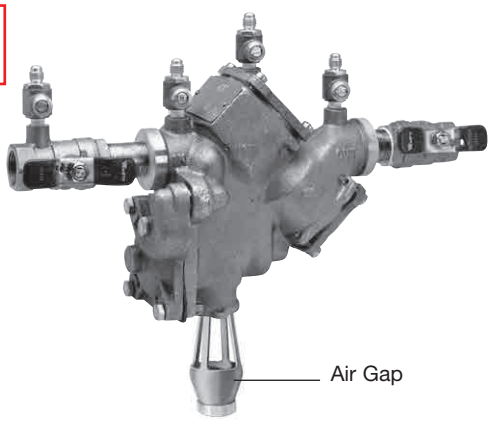

909 QT/LF909 QT

MODEL	ORDERING CODE	SERIES/ SIZES	DIMENSIONS						WEIGHT	
			A		B		C (NPT)			
			in.	*mm*	*in.*	*mm*	*in.*	*mm*	*lbs*	*kgs*
909AGA	0881399	½" – ½" 009/LF009 ¾" 009/LF009M2/M3 ½" – 1" 995	2⅜	60	3⅛	79	½	13	.63	.28
909AGC	0881376	¾" – 1" 009/LF009, 909/LF909 1" – 1½" 009/LF009M2 1¼" – 2" 995	3¼	83	4⅞	124	1	25	1.50	.68
909AGF	0881378	1¼" – 3" 009/LF009, 909/LF909 1¼" – 2" 009/LF009M1 2" 009/LF009M2	4⅜	111	6¾	171	2	51	3.25	1.47
909AGK	0881385	4" – 6" 909/LF909 4" – 10" 909RPDA 8" – 10" 909/LF909M1	6⅜	162	9⅝	244	3	76	6.25	2.83
909AGM	0881387	8" – 10" 909/LF909	7⅜	187	11¼	286	4	102	15.50	7.03
919 AGC	0881576	¾"-1" 919/LF919	2⅜	60	3 ⅛	79	½	13	0.63	0.28
919 AGF	0881577	1¼"-2" 919/LF919	4⅜	111	8 ½	216	2	51	3.5	1.6
957AG	0111764	2½" – 10" 957	7½	190	10⅜16	258	2	51	1.50	.68
Splash Guard										
994AGK-P	0881397	2½" – 10" 994	8	203	11¼	286	2	51	1.50	0.68
995-AG	0439190	3" – 6" 995	5	127	8	203	2	51	–	–
957AG	0111815	2½" – 10" 957	4¾	119	2½	62	–	–	.4	0.18

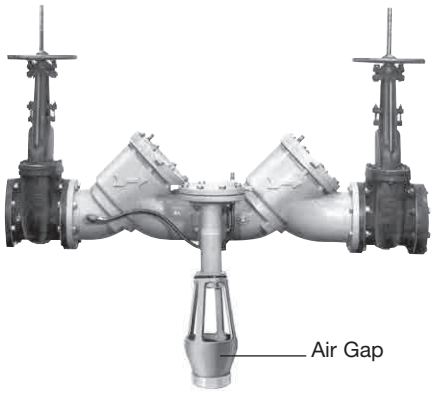

909 OSY/ LF909 OSY

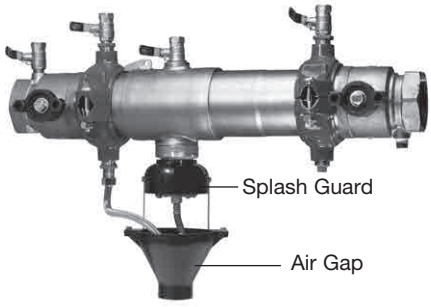

957 QT

NOTICE

Inquire with governing authorities for local installation requirements

Watts product specifications in U.S. customary units and metric are approximate and are provided for reference only. For precise measurements, please contact Watts Technical Service. Watts reserves the right to change or modify product design, construction, specifications, or materials without prior notice and without incurring any obligation to make such changes and modifications on Watts products previously or subsequently sold.

WATTS®

TAG: SECTION 22 42 01 2.6 DAR REDUCED PRESSURE

ES-957/957N/957Z

For Health Hazard Applications

Job Name WASTE WATER TREAMENT

Job Location IQUALUIT NUNAVUT

Engineer NUNAMI STANTEC

Approval _____

Contractor _____

Approval _____

Contractor's P.O. No. _____

Representative _____

LEAD FREE* ***3 INCHES***

Series 957, 957N, 957Z

Reduced Pressure Zone Assemblies

Sizes: 2½" – 10" (65 – 250 mm)

Series 957, 957N, 957Z Reduced Pressure Zone Assemblies provide protection to the potable water system from contamination in accordance with national plumbing codes. Series 957, 957N, 957Z are normally used in health hazard applications for protection against backsiphonage or backpressure.

Features

- 2½" 3" and 4" (65, 80 and 100mm) sizes available with quarter-turn ball valve shutoffs
- Replaceable check disc rubber
- Extremely compact design
- 70% Lighter than traditional designs
- 304 (Schedule 40) stainless steel housing & sleeve
- Groove fittings allow integral pipeline adjustment
- Patented torsion spring checks provide lowest pressure loss
- Unmatched ease of serviceability
- Bottom mounted cast stainless steel relief valve
- Available with grooved butterfly valve shutoffs

Specifications

The Reduced Pressure Zone Assembly shall consist of two independent torsion spring check modules, a differential pressure relief valve located between and below the two modules, two drip tight shutoff valves, and required torsion spring check modules and relief valve shall be contained with a sleeve accessible single housing constructed from 304 (Schedule 40) stainless steel pipe with groove end connections. Torsion spring checks shall have replaceable elastomer discs and in operation produce drip tight closure against the reverse flow of liquid caused by backpressure or backsiphonage. Assembly shall be a Watts Regulator Company Series 957, 957N, 957Z.

NOTICE

Inquire with governing authorities for local installation requirements

***The wetted surface of this product contacted by consumable water contains less than 0.25% of lead by weight.**

ON NON-POTABLE WATER
NPW
DRAWING
M603



957-NRS ~~957OSY~~

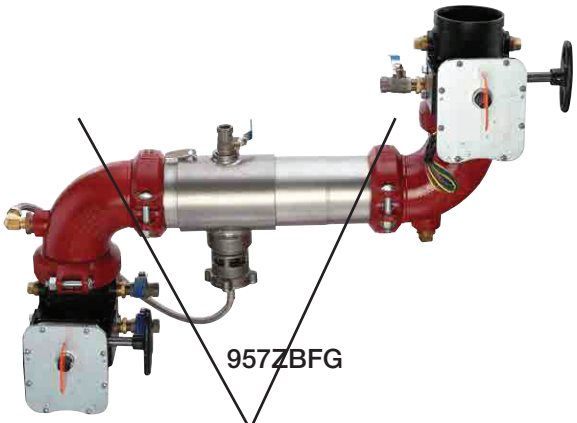

957ZBFG

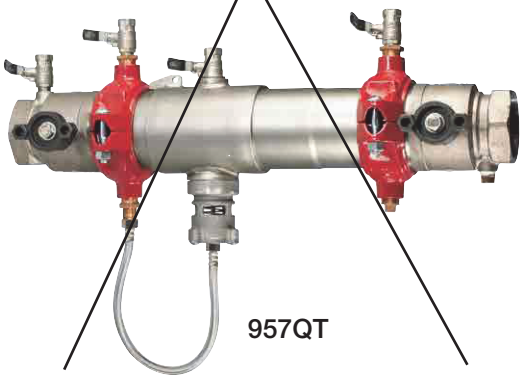

957QT

NOTICE

The information contained herein is not intended to replace the full product installation and safety information available or the experience of a trained product installer. You are required to thoroughly read all installation instructions and product safety information before beginning the installation of this product.

Watts product specifications in U.S. customary units and metric are approximate and are provided for reference only. For precise measurements, please contact Watts Technical Service. Watts reserves the right to change or modify product design, construction, specifications, or materials without prior notice and without incurring any obligation to make such changes and modifications on Watts products previously or subsequently sold.

WATTS®

TAG: SECTION 22 42 01 2.6 DAR REDUCED PRESSURE

Available Models

Suffix:

NRS –	non-rising stem, resilient seated gate valves
OSY –	UL/FM outside stem and yoke resilient seated gate valves
BFG –	UL/FM grooved gear operated butterfly valves with tamper switch
QT –	2½" - 4" (65 - 100mm) quarter-turn ball valves
**OSY FxG –	Flanged inlet gate connection and grooved outlet gate connection
**OSY GxF –	Grooved inlet gate connection and flanged outlet gate connection
**OSY GxG –	Grooved inlet gate connection and grooved outlet gate connection

Available with grooved NRS gate valves - consult factory**
Post indicator plate and operating nut available - consult factory**
**Consult factory for dimensions

Note: When installing a drain line on Series 957 backflow preventers, use 957AG air gaps. See ES-AG/EL/TC for additional information.

Materials

Housing & Sleeve: 304 (Schedule 40) Stainless Steel
Elastomers: EPDM, Silicone and Buna-N
Torsion Spring Checks: Noryl®, Stainless Steel
Check Discs: Reversible Silicone or EPDM
Test Cocks: Bronze Body Nickel Plated
Pins & Fasteners: 300 Series Stainless Steel
Springs: Stainless Steel

Pressure — Temperature

Temperature Range: 33°F – 140°F (0.5°C – 60°C)
Maximum Working Pressure: 175psi (12.1 bar)

Approvals

ASSE 1013 | CSA B64.4 | ** cULus CLASSIFIED (**BFG & OSY Only) | ** FM Approved | NSF Certified to NSF/ANSI 61-G

Dimensions — Weight

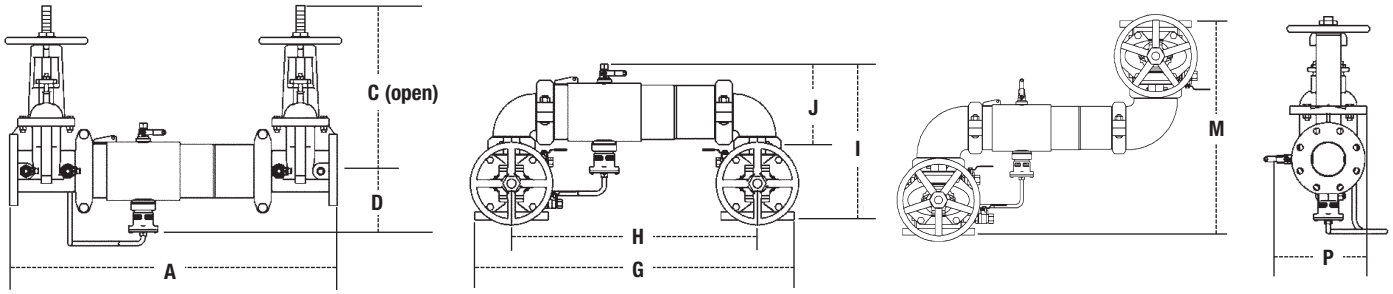

957, 957N, 957Z

SIZE (DN)		DIMENSIONS																WEIGHT					
		A		C (OSY)		C (NRS)		D		G		H		I		J		M		P		957NRS		957OSY		957N NRS		957N OSY	
in.	mm	in.	mm	in.	mm	in.	mm	in.	mm	in.	mm	in.	mm	in.	mm	in.	mm	in.	mm	in.	mm	lbs.	kgs.	lbs.	kgs.	lbs.	kgs.	lbs.	kgs.
2½	65	30¾	781	16⅜	416	9⅜	238	6½	165	29 1/16	738	21½	546	15½	393	8 13/16	223	21¼	540	9 3/16	234	118	54	128	58	126	57	136	62
3	80	31¾	806	18⅞	479	10¼	260	6 11/16	170	30¼	768	22¼	565	17⅛	435	9 3/16	233	23	584	10½	267	134	61	148	67	147	67	161	73
4	100	33¾	857	22¾	578	12 3/16	310	7	178	33	838	23½	597	18½	470	9 15/16	252	26¼	667	11 3/16	284	164	74	164	74	187	85	187	85
6	150	43½	1105	30⅛	765	16	406	8½	216	44¾	1137	35¼	895	23 3/16	589	13 1/16	332	34¼	870	15	381	276	125	298	135	317	144	339	154
8	200	49¾	1264	37¾	959	19 15/16	506	9 11/16	246	54⅛	1375	40⅛	1019	27 7/16	697	15 11/16	399	36⅞	937	17 3/16	437	441	200	483	219	516	234	558	253
10	250	57¾	1467	45¾	1162	23 13/16	605	11 3/16	285	66	1676	49½	1257	32½	826	17 5/16	440	44½	1124	20	508	723	328	783	355	893	405	950	431

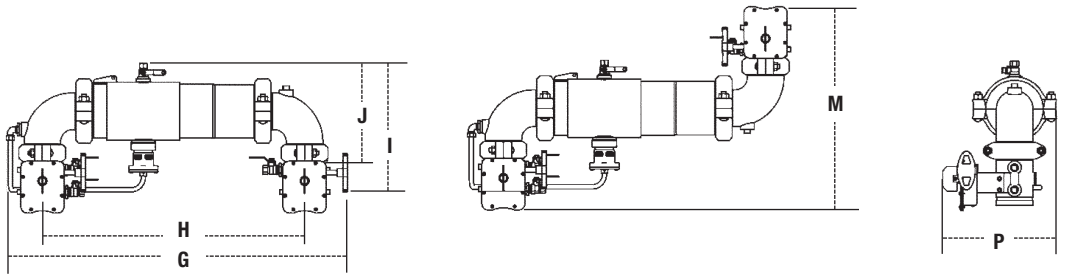

957NBFG, 957ZBFG

SIZE (DN)		DIMENSIONS												WEIGHT	
		G		H		I		J		M		P		957N/957Z	
in.	mm	in.	mm	in.	mm	in.	mm	in.	mm	in.	mm	in.	mm	lbs.	kgs.
2½	65	32½	826	23	584	15½	394	9½	241	19¾	502	11 13/16	300	67	30
3	80	34	864	24	610	16 5/16	414	10 1/16	256	21¼	540	12⅛	308	70	32
4	100	35⅝	905	25½	648	17 3/16	437	10 15/16	279	23½	597	12⅝	321	87	39
6	150	46½	1181	35¼	895	20½	521	13½	343	27¼	692	15	382	160	73

Noryl® is a registered trademark of SABIC Innovative Plastics Holding BV.

TAG: SECTION 22 42 01 2.6 DAR REDUCED PRESSURE

Capacity

Series 957, 957N, 957Z flow curves as tested by Underwriters Laboratory.

Flow characteristics collected using butterfly shutoff valves

——— Horizontal ——— N-Pattern - - - - - Z-Pattern

Flow capacity chart identifies valve performance based upon rated water velocity up to 25fps

- Service Flow is typically determined by a rated velocity of 7.5fps based upon schedule 40 pipe.
- Rated Flow identifies maximum continuous duty performance determined by AWWA.
- UL Flow Rate is 150% of Rated Flow and is not recommended for continuous duty.
- AWWA Manual M22 [Appendix C] recommends that the maximum water velocity in services be not more than 10fps.

2½" (65mm)

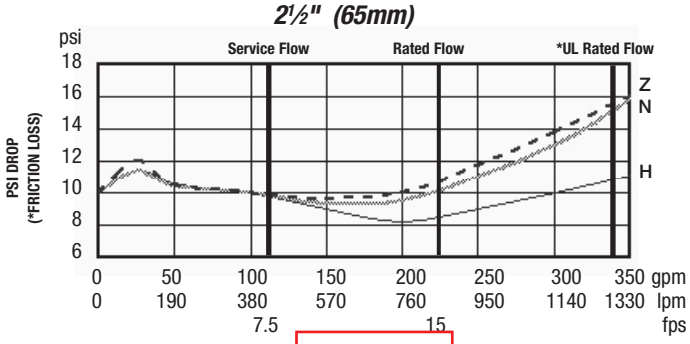

3" (80mm)

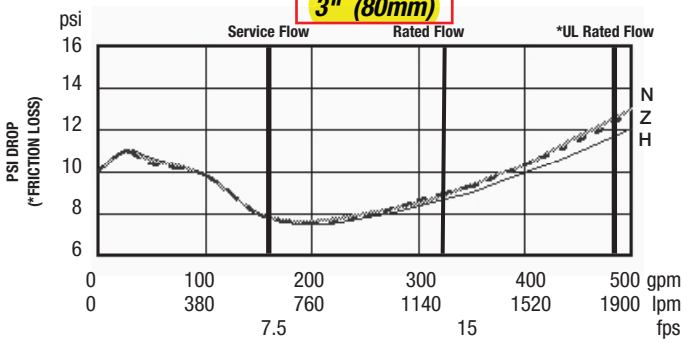

4" (100mm)

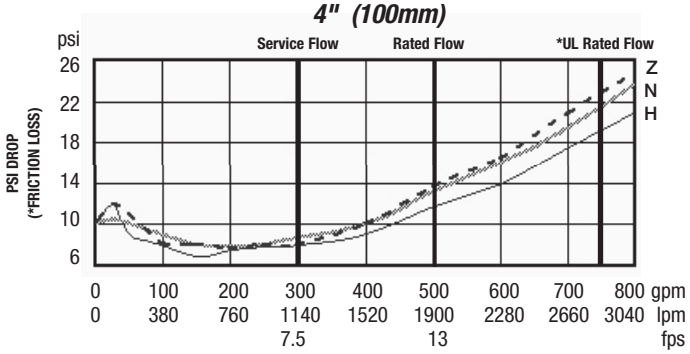

4" BFG (100 mm) Horizontal

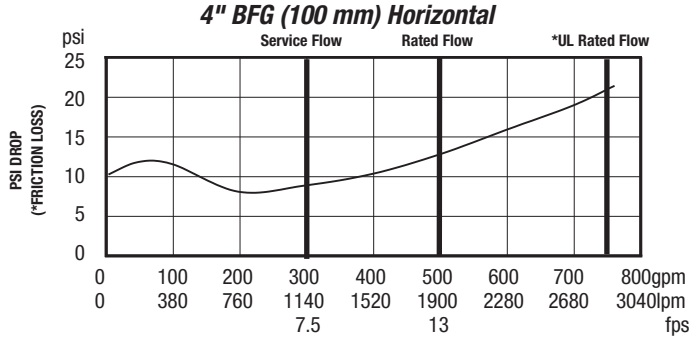

6" (150mm)

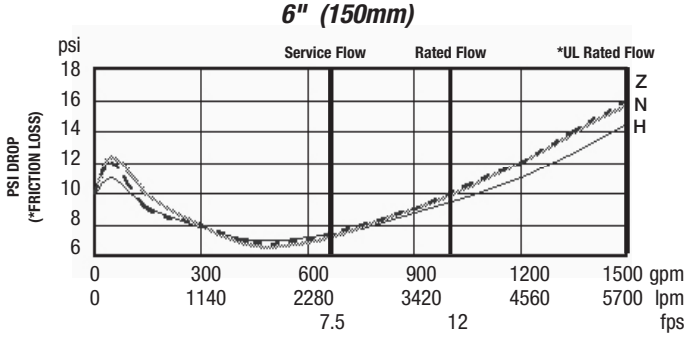

8" (200mm)

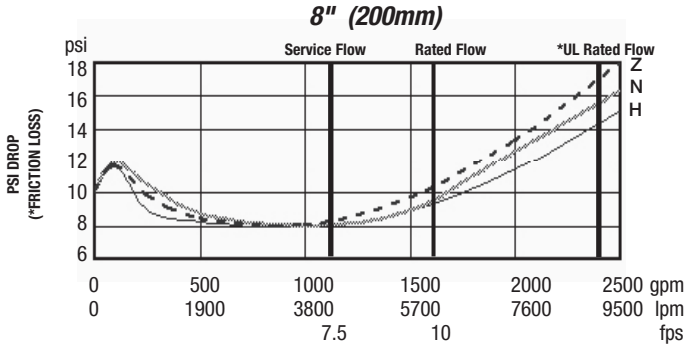

10" (250mm)

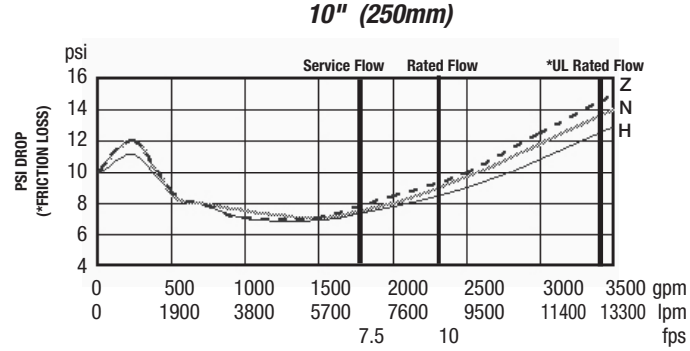

6" BFG (150 mm) Horizontal

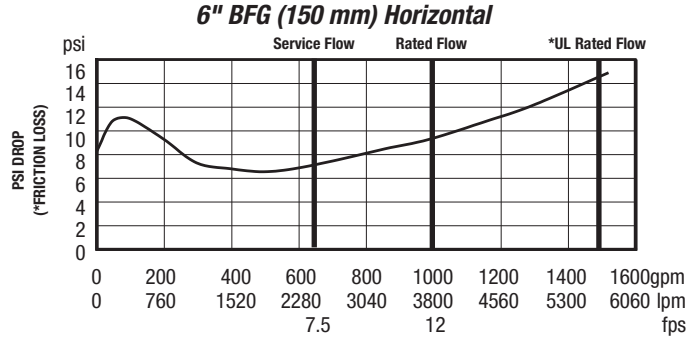

WATTS®

A Watts Water Technologies Company

USA: Tel: (978) 689-6066 • Fax: (978) 975-8350 • Watts.com
Canada: Tel: (905) 332-4090 • Fax: (905) 332-7068 • Watts.ca
Latin America: Tel: (52) 81-1001-8600 • Fax: (52) 81-8000-7091 • Watts.com

© 2014 Watts

ENGLISH INSTRUCTIONS

Installation Instructions

1. The valve should be installed by a licensed contractor in accordance with local codes and ordinances.
2. This valve should be installed where it is accessible with sufficient clearance for cleaning, service, or adjustment.
3. Before installing the valve, be sure that the pipe ends are reamed and threads are cut to size. For valves with Quick-Connect tailpieces refer to "Quick-Connect Installation" instructions below.
4. Flush the lines to remove all loose scale, dirt and other foreign matter that can damage or clog the valve.
5. Install the regulator with the arrow on the body pointing in the direction of the flow.
6. Regulator may be installed vertically or horizontally (upright or inverted).
7. Start Up — Open cold water supply then hot water supply. Inspect for leaks.

Note: The valve should be inspected annually to assure maximum life and performance.

Note: 25AUB-Z3 or LF25AUB-Z3 valves are suitable for accessible outdoor or pit installations.

Maintenance Instructions

- To clean strainer; shut off inlet water pressure, remove strainer plug (2), remove and clean strainer.
- To replace seat disc; shut off supply, loosen nut (51) and back off adjusting screw (53) remove spring cage (3), spring (52) and washer (62). Remove bottom plug (12) and gasket (101). Insert and hold screw driver in slot on top of stem while loosening seat disc holder (47) from bottom of stem (27).
- To replace diaphragm; loosen lock nut (48) and remove lock washer (46), diaphragm plate (60) and diaphragm (20).
- When reassembling apply a drop of low strength thread lock to disc holder.
- Open inlet water supply slowly.

Adjustment

Regulator is factory preset to 50psi (344 kPa). To adjust pressure setting, loosen the lock nut and turn the adjusting bolt clockwise to increase pressure, counterclockwise to decrease pressure.

CAUTION: Any time a reducing valve is adjusted, the use of a pressure gauge is recommended to verify correct pressure setting. Do not bottom out adjusting screw on spring cage.

Bypass Feature*

This regulator has a built-in thermal expansion bypass feature. This feature prevents downstream pressure from rising to more than 10psi above the supply pressure.

*The bypass feature will not prevent the pressure relief valve from opening on the hot water supply system with pressure above 150psi (10.3 bar).

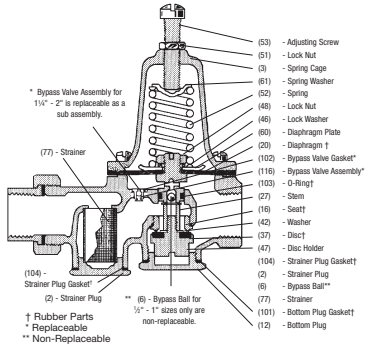

Repair Kits

† Kit for Series 25AUB-Z3 includes all items shown above

ORDERING CODE	KIT NO.	SIZE (DN)	
		in	*mm*
0864941	½" 25AUB-RK	½	15
0864943	¾" 25AUB-RK	¾	20
0864942	1" 25AUB-RK	1	25
0864944	1¼" 25AUB-RK	1¼	32
0864945	1½" 25AUB-RK	1½	40
0864946	2" 25AUB-RK	2	50

When Ordering, Specify:
1. Ordering Code
2. Size of Valve
3. Type Number
4. Model shown on Nameplate

Typical Installation

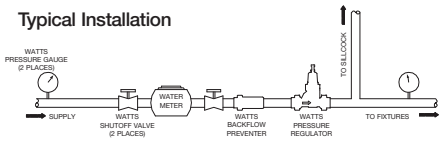

Series Installation

Series installations are recommended where very high supply pressure must be reduced to a very low downstream pressure. Reducing the pressure in stages eliminates whistling and noise.

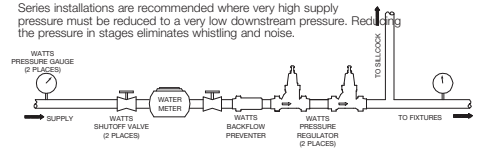

Parallel Installation

Parallel installations are recommended where high flow or low flow demand is intermittent/occasional. They are also used for installations where service cannot be interrupted.

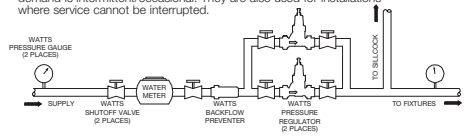

WARNING!

For valves with CPVC or PEX end connections do not exceed the tubing manufacturers pressure and temperature ratings. Refer to the tubing manufacturers product specifications for that information.

Quick-Connect Installation

To Connect:

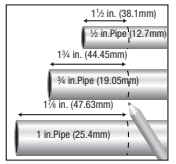

1. Mark pipe as shown. This is pipe insertion depth.
2. Clean pipe end.

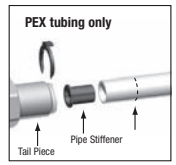

3. If using PEX tubing, insert pipe stiffener (provided) into end of pipe.
4. Push tubing into tailpiece up to mark.
5. Insert collet clip.

To Disconnect:

1. Remove collet clip.
2. Depress collet.
3. Pull tubing from tailpiece.

Troubleshooting

High System Pressure

If the downstream system pressure is higher than the set pressure under no flow conditions, the cause could be thermal expansion, pressure creep or dirt/debris on the seat.

Thermal expansion occurs whenever water is heated in a closed system. The system is closed when supply pressure exceeds 150psi, or a check valve or backflow preventer is installed in the supply piping.

You must make provisions for pressure relief protection of your plumbing system and components. The use of a relief valve such as the Watts 530C, BRV, Governor 80, or 3L or potable water expansion tank such as the Watts DET, PLT or DETA may be required.


276H300

To determine if this is the result of thermal expansion, try briefly opening the cold water tap. If the increased pressure is caused by thermal expansion, the pressure will immediately be relieved and the system will return to the set pressure. Watts offers a pressure test gauge, model 276H300 to assist you in determining if you have high water pressure.

The 276H300 when attached to a hose bibb registers the highest pressure reading over the period of time it is left on the system.

WATTS ACV

The Automatic Answer to Fluid Control

Installation, Operation, and Maintenance Bulletin Single Chamber Basic Valve

Model M100 (Globe) or M1100 (Angle)
Model M6100 (Globe) or M61100 (Angle)

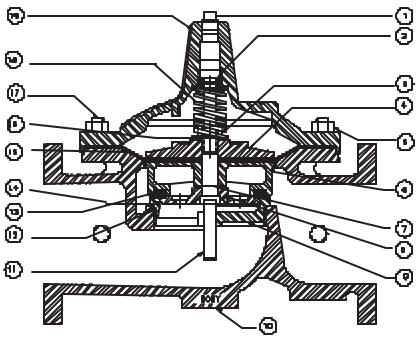

ITEM #	DESCRIPTION
1	COVER PLUG
2	COVER BEARING
3	STEM NUT
4	DIAPHRAGM WASHER
5	HEX NUT
6	DISC RETAINER
7	SPACER WASHER
8	DISC GUIDE
9	SEAT
10	BODY
11	STEM
12	SEAT O-RING
13	DISC
*14	SEAT SCREW
15	DIAPHRAGM
16	LOWER SPRING WASHER
17	STUD
18	SPRING
19	COVER

* VALVES 8" AND LARGER

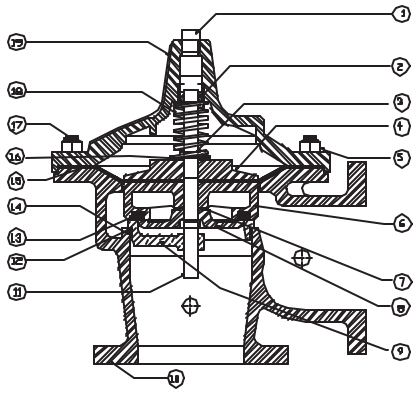

Globe **Angle**

Basic Construction

The Basic Valve has three (3) major components: Body, Cover, and the Disc & Diaphragm Assembly. It is available in Globe or Angle patterns, and Full or Reduced port design. Model M100 and M1100 are Full port, Model M6100 and M61100 are Reduced port valves.

Valve Servicing Dimensions

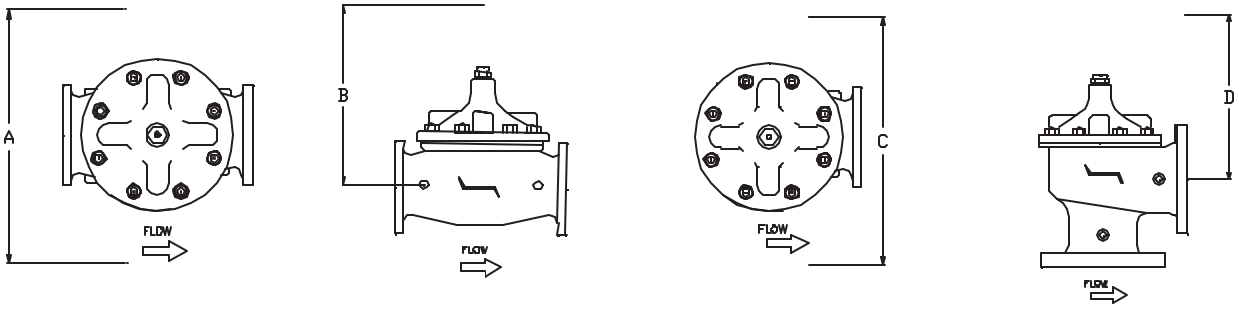

The following tables detail the recommended minimum valve servicing dimensions.

Globe

Size	1-1/4"	1-1/2"	2"	2-1/2"	3"	4"	6"	8"	10"	12"	14"	16"	*20"	*24"
A (in)	16	16	20	22	22	24	32	34	38	44	48	52	56	56
B (in)	10	10	12	14	14	16	24	26	28	30	34	40	48	48

* Model M6100 Reduced Port

Angle

Size	1-1/4"	1-1/2"	2"	2-1/2"	3"	4"	6"	8"	10"	12"	14"	16"
C (in)	16	16	20	22	22	24	32	34	38	44	48	52
D (in)	10	10	12	14	14	16	24	26	28	30	34	40

Installation

1. Prior to installation, flush line to remove debris.
2. Install valve so the flow arrow matches flow through the line, and gauges to monitor valve inlet and outlet pressures. A Position Indicator can be installed to provide visual indication of valve position and operation without disassembly.
3. Install isolation valves upstream and downstream of the main valve.
   Note: If using butterfly valves, ensure valve disc does not contact the main valve.
4. Provide adequate clearance for valve servicing and maintenance. Refer to valve servicing dimensions on Page 1.
5. Avoid installing valves 6" and larger in the vertical position (main valve stem horizontal). Automatic Control Valves (ACVs) are designed for horizontal in-line installation, with the cover facing up (main valve stem vertical). Slow operation or premature stem and guide wear may occur if valve is not installed according to factory recommendations. Consult factory for detailed engineering review prior to ordering if valve is to be installed other than horizontally in-line.
6. If valve is equipped with a pilot control system, extra precautions should be made during installation to protect the piping circuit from damage. Only remove the pilot control system from the valve if necessary. Tubing and fittings should be kept clean, and replaced exactly as removed. Consult appropriate hydraulic schematic to ensure proper re-assembly.
7. After installation, vent entrapped air from valve cover and pilot system by following instructions on Technical Bulletin.

Operation

The main valve, sometimes called a "Basic" or "Bare" valve, does not perform any function until it is commanded to do so by Pilots or Controls. These are connected to the valve by pipe fittings and tubing, and "pilot" or "control" the valve hydraulically to perform various functions. The Pilot Control System allows fluid and pressure to be 1) applied to, 2) exhausted from, or 3) regulated within the sealed chamber above the diaphragm. Depending on the configuration of the Pilot Control System, the valve may act either as an On-Off, a Regulating, or a Combination On-Off and Regulating Control Valve.

On-Off, Regulating, and Combination On-Off and Regulating ACVs operate on the difference in effective areas of the seat and diaphragm, and the forces exerted upon them by inlet and outlet pressures. The diaphragm area is approximately 1-1/2 times the area of the seat. This ratio, commonly referred to as the 1.5 : 1 Ratio, assures that valve will open and close as illustrated in the following example.

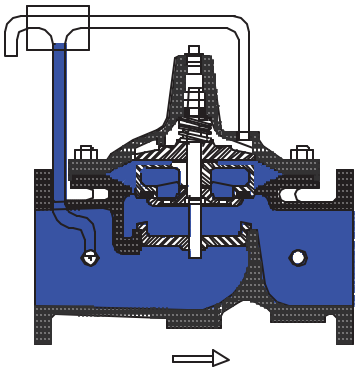

Figure 1

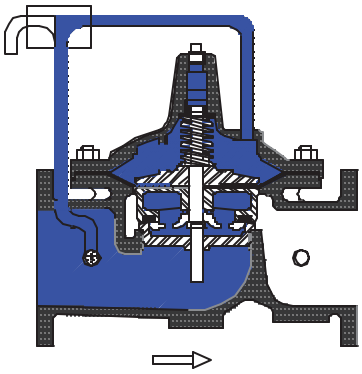

Figure 2

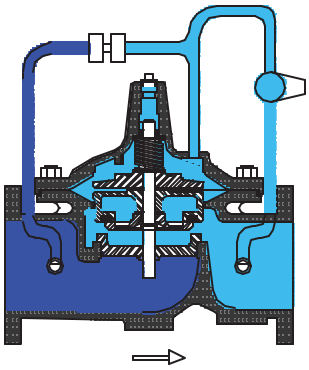

Figure 3

Valve Size: 4"
Diaphragm Area: 19 sq. in.
Seat Area: 13 sq. in.

Inlet Pressure: 100 p.s.i
Flow Direction: Under the Disc

Figure 1: 100 psi enters the valve below the seat, lifting the Disc and Diaphragm Assembly with approximately 1300 lbs of force (area x 100 psi). With no pressure in the cover chamber (above the diaphragm), the valve moves to a wide open position.

Figure 2: The 100 psi is admitted to the cover chamber (above the diaphragm), resulting in a downward force of approximately 1900 lbs (area x 100 psi). The downward force is greater than the upward force by 600 lbs, and the valve now moves to, and will remain in, a closed position due to the 1.5 : 1 ratio. Venting the cover chamber to atmosphere will again result in the valve traveling to a wide open position.

Figure 3: By regulating or balancing the pressure in the cover chamber (above the diaphragm), the valve will hold or modulate at an intermediate position until commanded to regulate open or closed by a modulating control pilot.

Flow Direction

The direction of flow through the valve can be either of two directions: Under-the-Disc or Over-the-Disc.

Under-the-Disc flow is the normal direction of flow through the valve. In the event of a diaphragm failure, the valve will fail to an open position. Over-the-Disc is not standard, however, is available for certain applications. When the valve is configured with Over-the-Disc flow, it will fail to a closed position in event of diaphragm failure.

The valve must be installed according to nameplate data and flow arrow designations.

Valve Travel

The travel or stroke of the valve is approximately 25% of the seat diameter. To properly measure valve travel, a Position Indicator should be installed. If the valve is equipped with a Limit Switch, the actuating stem provides visual indication of valve position and travel. Table 1 details approximate valve travel.

Table 1: Valve Travel (Inches)

Valve Size	1 1/4	1 1/2	2	2 1/2	3	4	6	8	10	12	14	16	20	24
Full Port	3/8	3/8	1/2	5/8	3/4	1	1 1/2	2	2 1/2	3	3 1/2	4		
Reduced Port					1/2	1	1	1 1/2	2	2 1/2		3	4	4

Maintenance

It is recommended that a Periodic Maintenance Schedule be established to inspect the valve stem for calcium or hard water deposits, and the condition of the diaphragm and seat disc. An annual Preventive Maintenance Schedule should help identify potential problem situations before emergency repairs are needed.

The normal replacement parts are the Seat Disc and the Diaphragm. These are available individually or together in a Rubber Repair Kit. Rubber repair kits for Control Pilots are sold separately. For maximum life expectancy, all rubber repair parts should be stored in a cool, dry environment, and not exposed to direct sunlight. In the event a non-rubber component part is required, review the cross-sectional drawing on Page 1 and consult your local representative or the factory.

Disc & Diaphragm Assembly

The valve employs a top and bottom guided stainless steel stem which is guided by a bearing in the valve cover and a bearing which is integral to the valve seat. A *Diaphragm*, consisting of nylon fabric bonded between two sheets of synthetic rubber is sandwiched between the *Diaphragm Washer* and the *Disc Retainer*. The bottom of the Disc Retainer contains a rectangular replaceable synthetic rubber *Seat Disc*. The Seat Disc is securely held in place by a plate called the *Disc Guide*. The Disc Retainer and Disc Guide surrounds the Seat Disc on 3-1/2 sides, preventing it from becoming dislodged. The exposed 1/2 side of the Seat Disc contacts the *Seat Ring*, and seals drip tight. When assembled, these components make what is called the *Disc & Diaphragm Assembly*.

This assembly is the only moving part inside the valve, and can be removed while the body remains in line. When the Disc & Diaphragm Assembly is installed in the valve, the diaphragm forms a seal between the valve body and cover, creating a *Cover Chamber*. Understanding what happens inside the cover chamber is of paramount importance to understanding what action the valve will take. (Refer to Figures 1, 2, and 3).

Disassembly, Inspection, and Re-Assembly

All maintenance and disassembly can be performed while the valve remains installed in the line.

Warning: The valve must be isolated from line pressure and fully depressurized before disassembly to avoid personal injury or equipment damage.

Recommended Tools for Disassembly

- Small & Large Adjustable Wrenches
- Fine Wire Brush
- Hammer & Dull Cold Chisel
- Hexagonal Wrench Set
- Small, Medium, and Large Screwdrivers
- Small and Large Pipe Wrenches
- Bench Vise
- Heavy Duty Ratchet and Socket Set
- Appropriate Technical Bulletin for Proper Start-Up Procedure
- Basic Valve IOM Manual
- 320 Grit (or fine) Emery Cloth
- Machinist Fine Metal File

1. Isolate the valve from line pressure and depressurize it to ensure safe working conditions. Disconnect any electrical connections if so equipped.
2. Carefully remove Position Indicator or Limit Switches if equipped. Remove all tubing, fittings, and Control Pilots necessary to easily access and remove the cover. Remove cover nuts and washers.
3. Remove the cover. If cover is not free to be removed, loosen it by tapping upward along its outside edge with a dull cold chisel (Figure 4). Another method is to carefully admit upstream pressure to the valve by partially opening the upstream isolation valve, allowing water pressure to push the cover upward. Leave at least 4 opposing cover nuts in place approximately 3 to 4 threads above the cover. Extreme caution should be taken when using this method.

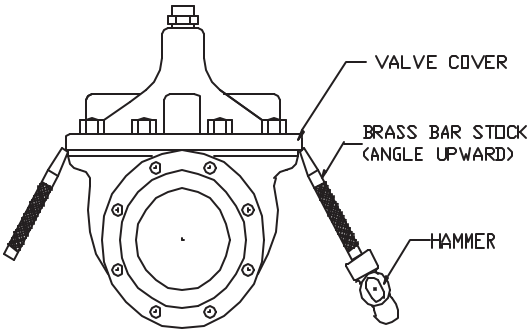

Figure 4

4. Remove the Disc and Diaphragm Assembly from the valve body by lifting straight up. Large diameter valves may require a lifting “eye” bolt to be installed in the valve stem accessory threads located on the very top of the valve stem.

Table 2: Valve Stem Accessory Threads

Valve Size (in)	1 1/4 - 2 1/2	3	4	6	8 - 12	14	16	20	24
Full Port	10-32	1/4-28	1/4-28	3/8-24	3/8-24	3/8-24	1/2-20		
Reduced Port		10-32	1/4-28	1/4-28	3/8-24		3/8-24	1/2-20	1/2-20

5. Before removing Stem Nut, examine stem threads for mineral build-up. Remove deposits with a fine wire brush. Extreme care should be taken not to damage the finish on stem guiding surfaces when disassembling. Avoid applying pipe wrenches to top or bottom stem guide surfaces.
6. After removing the Stem Nut, the remainder of the Disc & Diaphragm Assembly should disassemble easily. Polish stem guide surfaces with fine emery cloth to remove any mineral deposits, and inspect for excessive wear. Remove any mineral build-up from other components with wire brush or by using a Mineral Dissolving Solution. Inspect parts for wear and replace if necessary.
7. Inspect valve seat. If seat is not damaged, removal is not necessary. Valve seats 6” and smaller are threaded into the body of the valve and require a seat removal tool (Figure 5) (Table 3 details the tool dimensions for seat removal). Valve seats 8” and larger are held in the valve body with stainless steel cap screws. Remove seat retaining screws and lift seat straight up (Figure 6).

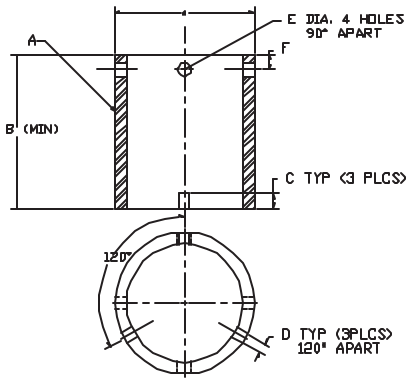

Figure 5

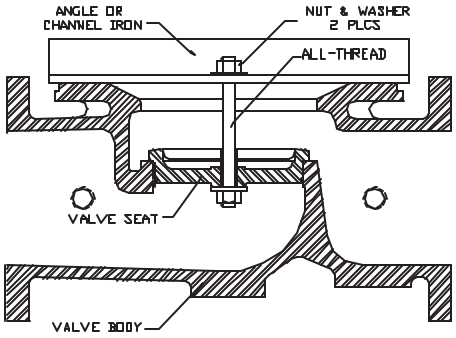

Figure 6

Table 3: Seat Removal Tool Dimensions

Size	A (Pipe Size)*	B (Min. Length)	C	D	E (Dia)	F
1-1/4”	1”	3.12”	0.38”	0.25”	0.44”	0.50”
1-1/2”	1”	3.12”	0.38”	0.25”	0.44”	0.50”
2”	1-1/4"	3.38”	0.38”	0.25”	0.44”	0.50”
2-1/2”	2”	4”	0.38”	0.38”	0.56”	0.62”
3”	2-1/2”	4.5”	0.50”	0.38”	0.56”	0.62”
4”	3”	5.0”	0.50”	0.44”	0.56”	0.62”
6”	5”	6.50”	0.62”	0.44”	0.56”	0.62”

* Schedule 40 Steel Pipe

8. Replace Seat Disc, Diaphragm and Spacer Washers provided in Main Valve repair kit (refer to Table 5 or 6 for correct repair kit part number). Re-assemble in the reverse order of disassembly.
9. Re-Install Disc and Diaphragm Assembly in the valve, taking care not to damage the lower guide area in the center of the valve seat.
10. Re-install Cover Spring. Replace Valve Cover and tighten Cover Nuts in a crossing pattern to ensure even distribution. Test the Disc and Diaphragm Assembly for smooth travel by following the Freedom of Movement Test procedure in next Section.
11. Test the integrity of the Seat Seal by following the Seat Seal Test procedure in next Section.
12. Return valve to service by following instructions on the Technical Bulletin matching the valve function.

Troubleshooting

Warning: The valve cannot be serviced under pressure. Upstream and downstream Isolation Valves must be installed to protect system piping. Accurate diagnosis and troubleshooting requires the valve to open fully, and may subject downstream piping and equipment to high pressure and/or flow rates. The downstream Isolation Valve should be kept closed while diagnosing the valve. Extreme caution should be used while performing the troubleshooting techniques listed below.

It is recommended that three (3) pressure gauges be installed on the valve to monitor: 1) valve inlet, 2) valve outlet, and 3) valve cover chamber pressures. A Position Indicator should also be installed to visually determine the position of the Disc & Diaphragm Assembly.

Diaphragm Seal Test

1. Close upstream and downstream isolation valves. Close ball cocks or remove control tubing to isolate cover chamber from receiving fluid and pressure. Remove uppermost Cover Plug, Position Indicator, or Limit Switch.
2. With the cover chamber vented to atmosphere, partially open the upstream Isolation Valve, allowing pressure to lift the Disc & Diaphragm Assembly. A volume of water will be displaced from the cover chamber as the valve opens (Table 4 details approximate full cover capacity). A continuous flow of water from the open port indicates a damaged diaphragm or a loose Disc & Diaphragm Assembly. Disassemble and replace diaphragm or tighten the Disc & Diaphragm Assembly.

Table 4: Cover Volume

Valve Size (in)	1 1/4 -2	2 1/2	3	4	6	8	10	12	14	16	20	24
Full Port (fl. oz)	4	10	10	22	70							
Full Port (U.S gal)						1.25	2.5	4	6.5	9.5		
Reduced Port (fl. oz)			4	10	22	70						
Reduced Port (U.S gal)							1.25	2.5		4	9.5	9.5

Seat Seal Test

1. Close downstream isolation valve, and admit inlet pressure to the Cover Chamber of the valve. Wait for the valve to close.
2. Install a pressure gauge in either of the two outlet ports on the valve, and monitor pressure reading. Gauge pressure should hold steady, and not rise. If gauge pressure rises to match inlet pressure, leakage is occurring through the seat of the valve. Disassemble, inspect, and replace required parts. If gauge pressure rises to match outlet pressure (downstream of closed isolation valve), yet remains below inlet pressure, the isolation valve may be leaking as opposed to the seat of the main valve.

Freedom-of-Movement / Valve Travel Test

1. Close upstream and downstream isolation valves and install Valve Position Indicator. Partially open upstream isolation valve to admit inlet fluid and pressure into the cover chamber closing the valve fully. Mark the Position Indicator's Full Closed position.
2. Isolate cover chamber from receiving fluid and pressure by closing ball cocks or removing control tubing. Carefully vent cover chamber to atmosphere by removing a cover plug, and observe the Valve Position Indicator as the valve travels to the full open position. The Disc & Diaphragm assembly should move freely from the full closed to full open position without binding or grabbing. Close upstream Isolation Valve and depressurize the valve body by opening an isolation ball valve or removing a body plug. The Disc & Diaphragm Assembly should move freely from the full open position to the closed position without binding or grabbing. The Disc & Diaphragm Assembly may momentarily "hesitate" while traveling from the full open to the full closed position. This "hesitation" is a normal characteristic of Diaphragm Control Valves, and does not indicate mechanical binding or improper valve operation.

   Note: A continuous discharge of fluid from the open cover port indicates leakage past the Diaphragm.

   Disassemble, inspect Diaphragm (replace if needed), and retighten Disc & Diaphragm Assembly before proceeding further. Reinstall Pilot Control System.

Repair Kits

Main valve repair kits contain all rubber components (diaphragm, seat disc, spacer washers, and seat O-ring) necessary to repair a basic valve. Repair kits for Pilot Controls are sold separately. Table 5 and 6 detail the part numbers for full port and reduced port Main Valve repair kits.

Table 5: Full Port Valve (M100 / M1100) Repair Kits

Size (in)	1 1/4	1 1/2	2	2 1/2	3	4
P/N	0677-01	0677-01	0677-02	0677-03	0677-04	0677-05
Size (in)	6	8	10	12	14	16
P/N	0677-06	0677-07	0677-08	0677-09	0677-10	0677-11

Table 6: Reduced Port Valve (M6100 / M61100) Repair Kits

Size (in)	3	4	6	8	10	12	16	20 & 24
P/N	0677-02	0677-04	0677-05	0677-06	0677-07	0677-08	0677-09	0677-11

Installation, Maintenance, & Repair Series 009 and LF009

Reduced Pressure Zone Assemblies

Sizes: ¼" – 3" (8 – 80mm)

⚠ WARNING

Read this Manual BEFORE using this equipment.

Failure to read and follow all safety and use information can result in death, serious personal injury, property damage, or damage to the equipment.

Keep this Manual for future reference.

THINK SAFETY FIRST

Local building or plumbing codes may require modifications to the information provided. You are required to consult the local building and plumbing codes prior to installation. If this information is not consistent with local building or plumbing codes, the local codes should be followed.

Need for Periodic Inspection/Maintenance: This product must be tested periodically in compliance with local codes, but at least once per year or more as service conditions warrant.

If installed on a fire suppression system, all mechanical checks, such as alarms and backflow preventers, should be flow tested and inspected in accordance with NFPA 13 and/or NFPA 25.

Corrosive water conditions, and/or unauthorized adjustments or repair could render the product ineffective for the service intended. Regular checking and cleaning of the product's internal components helps assure maximum life and proper product function.

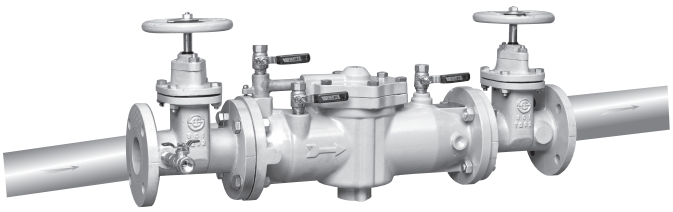

3" (80mm) 009NRS

NOTICE

For Australia and New Zealand, line strainers should be installed between the upstream shutoff valve and the inlet of the backflow preventer.

Testing

For field testing procedure, refer to Watts installation sheets IS-TK-DP/DL, IS-TK-9A, IS-TK-99E and IS-TK-99D found on **watts.com.**

For other repair kits and service parts, refer to our Backflow Prevention Products Repair Kits & Service Parts price list PL-RP-BPD found on **watts.com.**

For technical assistance, contact your local Watts representative.

Installation Instructions

Series 009 and LF009

Indoors – Figure 1

For indoor installations, it is important that the assembly be easily accessible to facilitate testing and servicing. If it is located in a line close to a wall, be sure the test cocks are easily accessible. A drain line and air gap (see literature ES-AG/EL/TC) should be piped from the relief valve connection as shown, where evidence of discharge will be clearly visible and so that water damage will not occur. **Therefore, never install in concealed locations.**

Figure 1

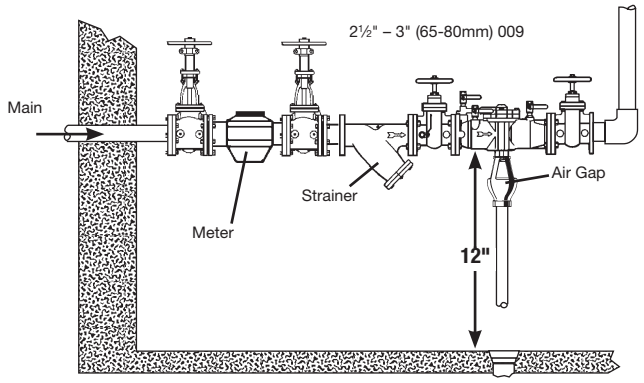

NOTICE

In an area where freezing conditions can occur, Series 009 and LF009 should be installed above ground in an insulated enclosure.

Series 009 and LF009 must be installed in an accessible location to facilitate testing and servicing. A discharge line should be piped from the air gap at the relief valve connection making sure that there is adequate drainage. Never pipe the discharge line directly into a drainage ditch, sewer or sump. Series 009 and LF009 should never be installed where any part of the unit could become submerged in standing water.

Outside – Figure 2

In an area where freezing conditions do not occur, Series 009 and LF009 can be installed outside. The most satisfactory installation is above ground and should be installed in this manner.

Backflow preventers should not be installed in pits unless approved by local codes. In such cases, a modified pit installation is preferred.

Figure 2

Now available, WattsBox Insulated Enclosures, for more information, send for literature ES-WB.

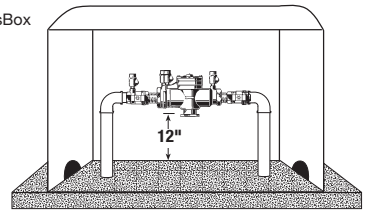

WATTS®

Installation Instructions
Series 009 and LF009

Parallel – Figure 3

Two or more smaller size assemblies can be piped in parallel (when approved) to serve a large supply pipe main. This type of installation is employed where increased capacity is needed beyond that provided by a single valve and permits testing or servicing of an individual valve without shutting down the complete line.

The number of assemblies used in parallel should be determined by the engineer's judgment based on the operating conditions of a specific installation.

For parallel valve installations, the total capacity of the assemblies should equal or exceed that required by the system.

Figure 3

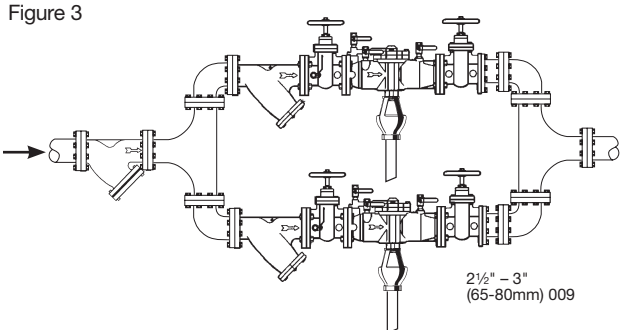

Annual inspection of all water system safety and control valves is required and necessary. Regular inspection, testing and cleaning assures maximum life and proper product function.

NOTICE

Shutoff Valves: When shutoff valves are removed and reassembly is necessary, the shutoff valve with the test cock is to be mounted on the inlet side of the backflow preventer.

A. The 009 and LF009 should always be installed in an accessible location to facilitate testing and servicing (See page 2). **Check the state and local codes to ensure that the backflow preventer is installed in compliance, such as the proper height above the ground.**

B. We recommend a strainer be installed ahead of 009 and LF009 series assemblies to protect the internal components from unnecessary fouling.

⚠ CAUTION

Do not install with strainer when backflow preventer is used on seldom-used water lines which are called upon only during emergencies, such as fire sprinkler lines.

Start Up: The downstream shutoff should be closed. Open upstream slowly and fill valve. When valve is filled, open the downstream shutoff slowly and fill the water supply system. This is necessary to avoid water hammer or shock damage.

C. Water discharge from the relief valve should be vented in accordance with code requirements. The relief valve should never be solidly piped into a drainage ditch, sewer or sump. The discharge should be terminated approximately 12" above the ground or through an air gap piped to a floor drain.

NOTICE

Relief Valve Discharge Rates

The installation of an air gap with the drain line terminating above a floor drain will handle any normal discharge or nuisance spitting through the relief valve. However, floor drain size may need to be designed to prevent water damage caused by a catastrophic failure condition. Please refer to Figure No. 4 for maximum relief valve discharge rates, size and capacity of typical floor drains.

Do not reduce the size of the drain line from the air gap fitting. Pipe full line size.

D. After initial installation, a discharge from the relief valve opening may occur due to inadequate initial flushing of pipe lines to eliminate dirt and pipe compounds. If flushing will not clear, remove the first check valve and clean thoroughly.

NOTICE

Periodic relief valve discharge may occur on dead end service applications, such as boiler feed lines or cooling tower makeup lines due to fluctuating supply pressure during a static or no flow condition. To avoid this discharge, install a spring-loaded rubber seated check valve ahead of the backflow assembly to "lock-in" the downstream pressure.

E. Backflow preventers should never be placed in pits unless absolutely necessary and then only when and as approved by local codes. In such cases, provision should be made to always vent above flood level or for a pit drain to ensure an adequate air gap below the relief port.

F. It is important that Series 009 and LF009 backflow preventers be inspected periodically for any discharge from the relief valve which will provide a visual indication of need for cleaning or repair of check valves. Also testing for proper operation of the device should be made periodically in compliance with local codes, but at least once a year or more often, depending upon system conditions.

Relief vent will discharge water when, during no-flow periods, (1) the first check valve is fouled or (2) the inlet pressure to the device drops sufficiently due to upstream pressure fluctuations to affect the required operating differential between the inlet pressure and reduced pressure zone. Otherwise, such relief (spitting) can occur when the second check is fouled during emergency backflow or resulting from a water hammer condition. For Troubleshooting Guide send for S-TSG.

NOTICE

Special considerations are necessary when testing assemblies installed on Fire Prevention Systems.

Fire Protection System Installations: The National Fire protection Agency (NFPA) Guidelines require a confirming flow test be conducted whenever a "main line" valve such as the shutoff valves or a backflow assembly have been operated. Certified testers of backflow assemblies must conduct this confirming test.

Figure 4

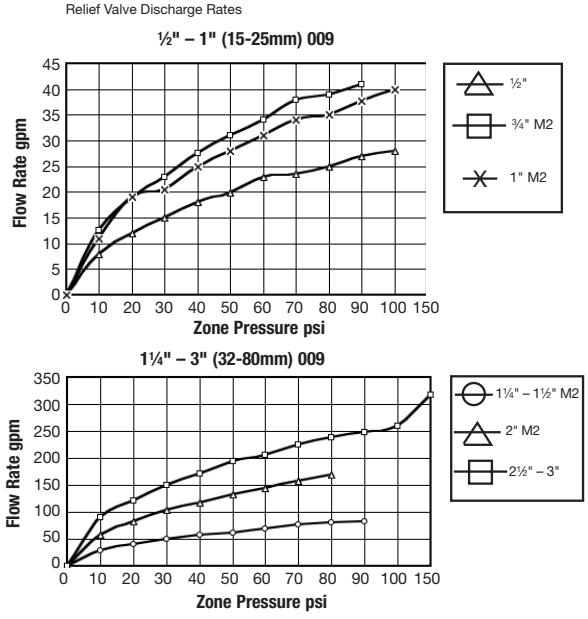

TYPICAL FLOW RATES AS SIZED BY FLOOR DRAIN MANUFACTURERS:	
2" (50 mm) 55 GPM	5" (125 mm) 350 GPM
3" (80 mm) 112 GPM	6" (150 mm) 450 GPM
4" (100 mm) 170 GPM	8" (200 mm) 760 GPM

Servicing the Relief Valve

Series 009 and LF009

¼" – 3" (8 – 80mm)

1. Remove the four or six relief valve cover bolts while holding the cover down.
2. Lift the cover straight off. The stem and diaphragm assembly will normally remain with the cover as it is removed. The relief valve spring will be free inside the body at this point.
3. The relief valve seat is located at the bottom of the body bore, and can be removed, if necessary, for cleaning. The disc can be cleaned without disassembly of the relief valve module. If it is determined that the relief valve diaphragm and/or disc should be replaced, the relief valve module can be readily disassembled without the use of special tools.

NOTICE

The disc rubber is molded into the disc holder and is supplied as a disc holder assembly.

4. To reassemble the relief valve, press the seat firmly into place in the body, center the spring on the seat, and insert the cover and relief valve module as a unit straight into the bore. Press down on the cover to assure proper alignment. Insert and tighten bolts.

NOTICE

If cover will not press flat against body, stem assembly is crooked and damage can result. Realign stem and cover before bolts are inserted.

NOTICE

No special tools required to service Series 009 2½" – 3" (65 – 80mm).

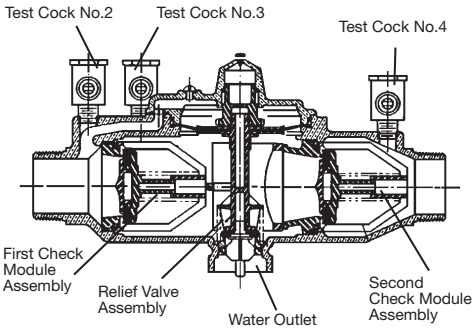

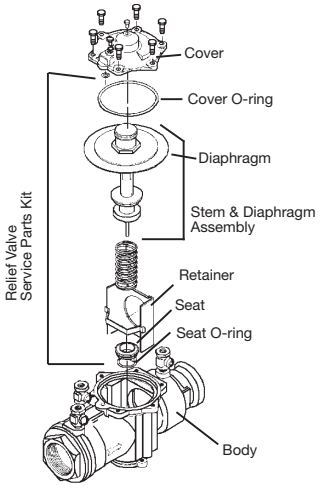

For repair kits and parts, refer to our Backflow Prevention Products Repair Kits & Service Parts price list PL-RP-BPD found on **watts.com.**

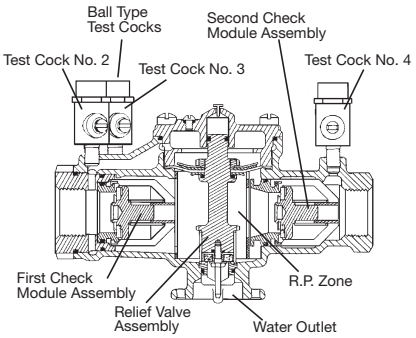

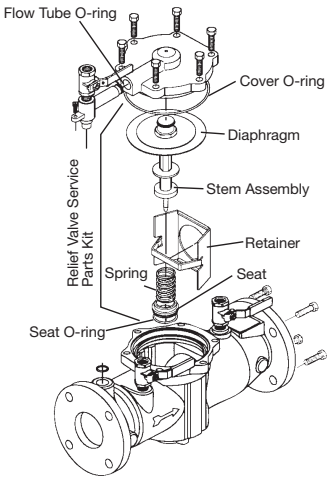

Servicing First & Second Check Valves

Series 009 and LF009

¼" – 3" (8 – 80mm)

1. Remove the relief valve assembly as outlined on page 3.
2. Remove the retainer from the body bore. The check valve modules can now be removed from the valve by hand or with a screwdriver.

NOTICE

The seats and springs of the first and second check modules are not interchangeable. The heavier spring and smaller diameter seat belong with the first check module.

3. The check seats are attached to the cage with a bayonet type locking arrangement. Holding the cage in one hand, push the seat inward and rotate counterclockwise for 2½", 3"; Clockwise for ¼" – 2" against the cage. The seat, spring cage, spring and disc assembly are now individual components.
4. The disc assembly may now be cleaned and reassembled or, depending on its condition, may be discarded and replaced with a new assembly from the repair kit. O-rings should be cleaned or replaced as necessary and lightly greased with the FDA approved silicon grease. For more information refer to repair parts price list PL-RP-BPD.
5. Reassemble the check valve modules. Check modules are installed in the valve body with the seat facing the valve inlet. The modules must be securely in place before the retainer can be replaced. Replace relief valve assembly.

NOTICE

No special tools required to service Series 009 2½" – 3" (65 – 80mm)

Servicing First & Second Check Valves

Series 009 and LF009 — ¼" – 3" (8 – 80mm)

CHECK ASSEMBLY ¾" M3

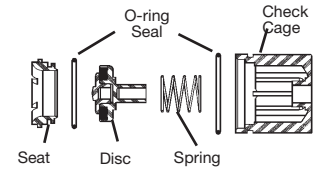

CHECK ASSEMBLY ¼" – ¾"

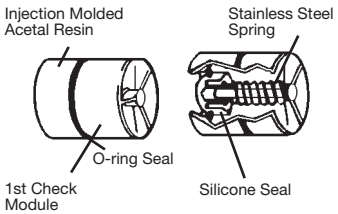

CHECK ASSEMBLY 1" - 2" (25 – 50mm)

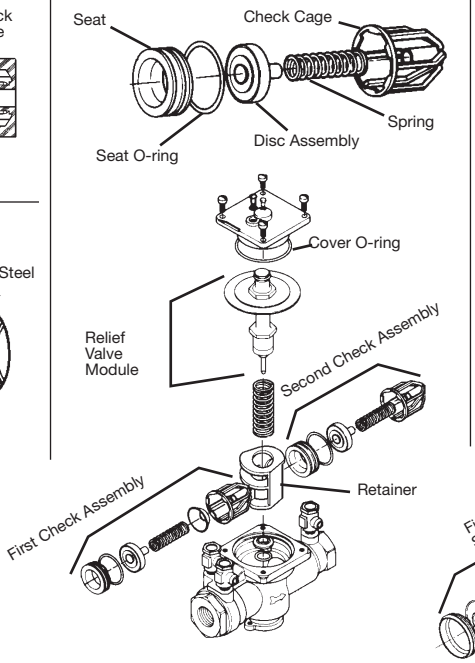

Check Assemblies

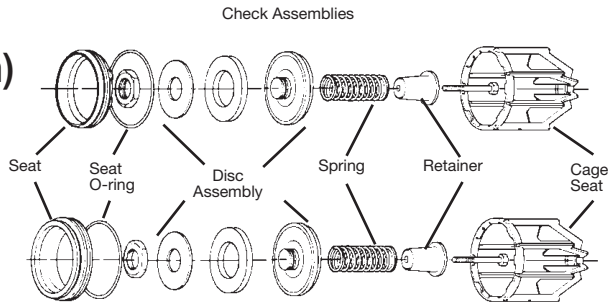

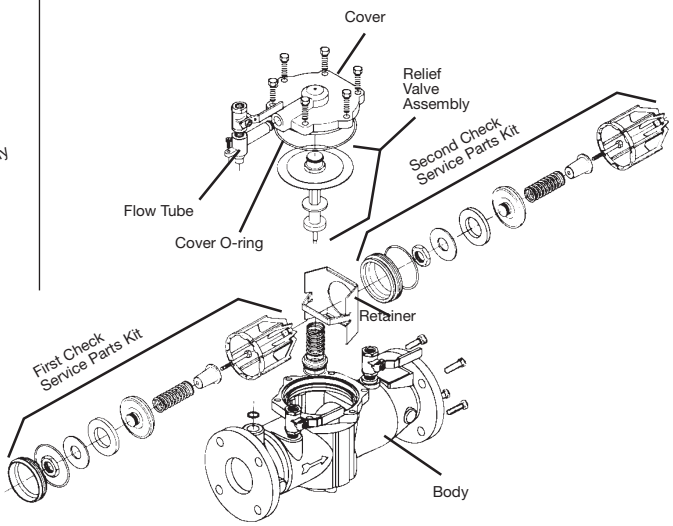

For repair kits and parts, refer to our Backflow Prevention Products Repair Kits & Service Parts price list PL-RP-BPD found on **watts.com.**

Watts reserves the right to change or modify product design, construction, specifications, or materials without prior notice and without incurring any obligation to make such changes and modifications on Watts products previously or subsequently sold.

WARNING: This product contains chemicals known to the State of California to cause cancer and birth defects or other reproductive harm.
For more information: www.watts.com/prop65

Troubleshooting Guide

Symptom	Cause	Solution
1. Check valve fails to hold 1.0 PSID minimum	a. Debris on check disc sealing surface	Disassemble and clean
	b. Leaking isolation valve	Disassemble and clean or repair
	c. Damaged seat disc or seat o-ring	Disassemble and replace
	d. Damaged guide holding check open	Disassemble and clean or replace
	e. Weak or broken spring	Disassemble and replace spring
2. Chatter during flow conditions	a. Worn, damaged or defective guide	Disassemble and repair or replace guide
3. Low flows passing through mainline valve	a. Mainline check fouled	Disassemble and clean
	b. Meter strainer plugged	Disassemble and clean
	c. Damaged mainline seat disc or seat	Disassemble and replace
	d. Broken mainline spring	Disassemble and replace

Limited Warranty: Watts Regulator Co. (the "Company") warrants each product to be free from defects in material and workmanship under normal usage for a period of one year from the date of original shipment. In the event of such defects within the warranty period, the Company will, at its option, replace or recondition the product without charge.
THE WARRANTY SET FORTH HEREIN IS GIVEN EXPRESSLY AND IS THE ONLY WARRANTY GIVEN BY THE COMPANY WITH RESPECT TO THE PRODUCT. THE COMPANY MAKES NO OTHER WARRANTIES, EXPRESS OR IMPLIED. THE COMPANY HEREBY SPECIFICALLY DISCLAIMS ALL OTHER WARRANTIES, EXPRESS OR IMPLIED, INCLUDING BUT NOT LIMITED TO THE IMPLIED WARRANTIES OF MERCHANTABILITY AND FITNESS FOR A PARTICULAR PURPOSE.
The remedy described in the first paragraph of this warranty shall constitute the sole and exclusive remedy for breach of warranty, and the Company shall not be responsible for any incidental, special or consequential damages, including without limitation, lost profits or the cost of repairing or replacing other property which is damaged if this product does not work properly, other costs resulting from labor charges, delays, vandalism, negligence, fouling caused by foreign material, damage from adverse water conditions, chemical, or any other circumstances over which the Company has no control. This warranty shall be invalidated by any abuse, misuse, misapplication, improper installation or improper maintenance or alteration of the product.
Some States do not allow limitations on how long an implied warranty lasts, and some States do not allow the exclusion or limitation of incidental or consequential damages. Therefore the above limitations may not apply to you. This Limited Warranty gives you specific legal rights, and you may have other rights that vary from State to State. You should consult applicable state laws to determine your rights. **SO FAR AS IS CONSISTENT WITH APPLICABLE STATE LAW, ANY IMPLIED WARRANTIES THAT MAY NOT BE DISCLAIMED, INCLUDING THE IMPLIED WARRANTIES OF MERCHANTABILITY AND FITNESS FOR A PARTICULAR PURPOSE, ARE LIMITED IN DURATION TO ONE YEAR FROM THE DATE OF ORIGINAL SHIPMENT.**

WATTS®

A Watts Water Technologies Company

USA: Tel: (978) 689-6066 • Fax: (978) 975-8350 • Watts.com
Canada: Tel: (905) 332-4090 • Fax: (905) 332-7068 • Watts.ca
Latin America: Tel: (52) 81-1001-8600 • Fax: (52) 81-8000-7091 • Watts.com

© 2014 Watts

Installation, Maintenance, & Repair Series 957, 957RPDA, LF957RPDA

Reduced Pressure Zone Assemblies
Reduced Pressure Detector Assemblies

Sizes: 2½" – 10" (65 – 250mm)

⚠ WARNING

Read this Manual BEFORE using this equipment.

Failure to read and follow all safety and use information can result in death, serious personal injury, property damage, or damage to the equipment.

Keep this Manual for future reference.

THINK SAFETY FIRST

Local building or plumbing codes may require modifications to the information provided. You are required to consult the local building and plumbing codes prior to installation. If this information is not consistent with local building or plumbing codes, the local codes should be followed.

Need for Periodic Inspection/Maintenance: This product must be tested periodically in compliance with local codes, but at least once per year or more as service conditions warrant. Corrosive water conditions, and/or unauthorized adjustments or repair could render the product ineffective for the service intended. Regular checking and cleaning of the product's internal components helps assure maximum life and proper product function.

NOTICE

For Australia and New Zealand: Pipeline strainers should be installed between the upstream shutoff valve and the inlet of the backflow preventer.

It's important that this device be tested periodically in compliance with local codes, but at least once per year or more as service conditions warrant. If installed on a fire sprinkler system, all mechanical checks, such as alarm checks and backflow preventers, should be flow tested and inspected internally in accordance with NFPA 13 and NFPA 25.

Testing

For field testing procedure, refer to Watts installation sheets IS-TK-DP/DL, IS-TK-9A, IS-TK-99E and IS-TK-99D found on **www.watts.com.**

For other repair kits and service parts, refer to our Backflow Prevention Products Repair Kits & Service Parts price list PL-RP-BPD found on **www.watts.com.**

For technical assistance, contact your local Watts representative.

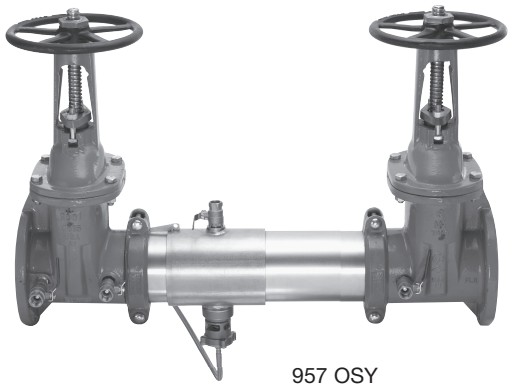

957 OSY

Installation Instructions

Series 957, 957RPDA, LF957RPDA

Guidelines

1. Most field problems occur because dirt and debris are present in the system at the time of installation and becomes trapped in the #1 check. The system should be flushed before the backflow valve is installed. If the system is not flushed until after the backflow valve is installed, remove both check modules from the valve and open the inlet shutoff to allow water to flow for a sufficient time to flush debris from the water line. If debris in the water system continues to cause fouling, a strainer can be installed upstream of the backflow assembly.
2. Watts Series 957, 957RPDA and LF957RPDA may be installed in either horizontal, "N" pattern, or "Z" pattern position as long as the backflow assembly is installed in accordance with the direction of the flow arrow on the assembly and the local water authority approves the installation.
3. The assembly should be installed with adequate clearance around the valve to allow for inspection, testing and servicing. 12" (305mm) should be the minimum clearance between the lower portion of the assembly and the floor or grade. The valve should be protected from freezing.
4. Installing a backflow preventer in a pit or vault is not recommended.
5. Normal discharge and nuisance spitting are accommodated by the use of a Watts air gap fitting and a fabricated indirect waste line. Floor drains of the same size must be provided in case of excessive discharge.
6. The 957, 957RPDA and LF957RPDA backflow preventer should be tested by a certified tester at the time of installation.

NOTICE

Assembly body should not be painted.

Installation Instructions

Series 957, 957RPDA, LF957RPDA

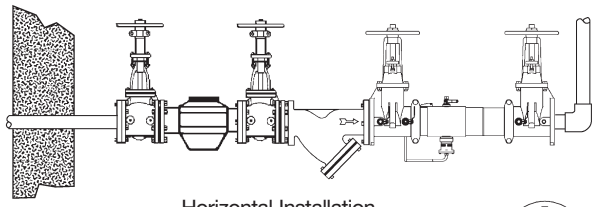

Horizontal Installation

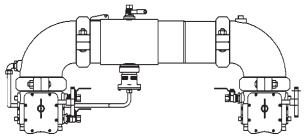

N Pattern

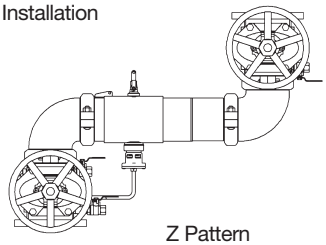

Z Pattern

Relief Valve Discharge Rates 2½" – 10" (65 - 250mm)
957, 957RPDA and LF957RPDA

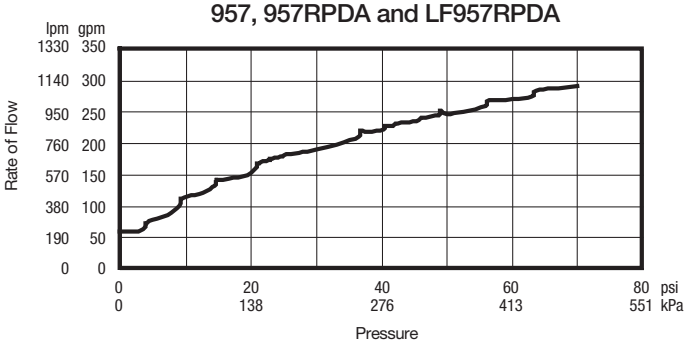

Maintenance Instructions

Series 957, 957RPDA, LF957RPDA

2½" – 6" (65 – 150mm)

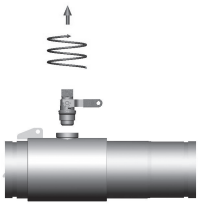

Figure A

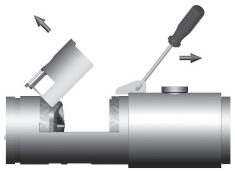

Figure B

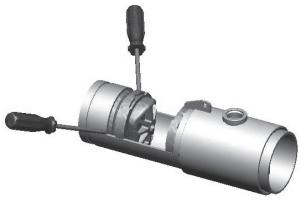

Figure C

#1 Check Diagrams

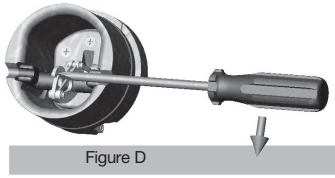

Figure D



Figure E

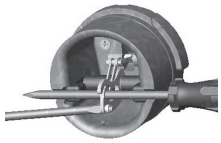

Figure F

#2 Check Diagrams

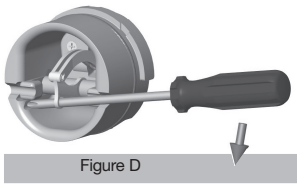

Figure D

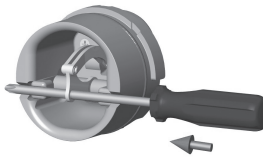

Figure E

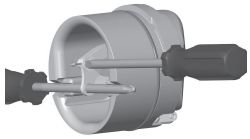

Figure F

⚠ WARNING

Prior to servicing any Watts valve, it is mandatory to shut down the water system by closing both the inlet and outlet shutoff valves. After shutoff valves are closed, open test cock #2, #3 and #4 to relieve pressure within the backflow assembly.

1. After #3 test cock has been opened to relieve pressure, remove #3 test cock from housing. (Figure A)
2. Insert a #3 screwdriver through the hole on the top of the cover sleeve and using both hands rotate the cover sleeve approximately ¼-turn clockwise and ¼-turn counter-clockwise to break the sleeve O-ring seals. Using the screwdriver, slowly slide the cover sleeve to the downstream side of the housing. (Figure B)
3. Remove the stainless steel check retainer from the housing. (Figure B)
4. Remove the #1 check module (Figure C) by inserting two flat blade screwdrivers into the slots on either side of the check module and gently pry the check module toward the open zone.
5. Remove #2 check module with the same instructions as in #4 above. For servicing 6" (150mm) checks see 8" – 10" (200 – 250mm) instructions on p. 4.
6. To clean or inspect either check module, insert a #3 screwdriver through the downstream side of the check module as shown in Figure D and E. When the screwdriver is in place, remove the E-clip (Figure F) and pin connecting the structural members and the check clapper will open with no tension.
7. Thoroughly clean the seating area. The sealing disc may be removed, if necessary, by removing the screws connecting the keeper plate to the clapper. The sealing disc may be reversed and reinstalled if the elastomer is cut or damaged.
8. Wash check module and O-ring and inspect for any damage. If damaged, reinstall new parts.
9. After thorough cleaning, lubricate O-ring w/FDA approved lubricant, replace pin and E-clip in structural members, remove screw driver and reinstall check modules and assemble housing in reverse order of these instructions.

Maintenance Instructions

Series 957, 957RPDA, LF957RPDA

8" – 10" (200 – 250mm)

Material–Tool Requirements:

- #3 Phillips screwdriver or 5/16" diameter rod, length sufficient to span diameter of check, see Figures A and B.
- 1/2 – 13 x 5 fully threaded hex bolt (Service bolt).
- 3/4" open end or socket wrench.

Instructions

⚠ WARNING

Prior to servicing any Watts valve, it is mandatory to shut down the water system by closing both the inlet and outlet shutoff valves. After shutoff valves are closed, open test cock #2, #3 & #4 to relieve pressure within the backflow assembly.

1. After #3 test cock has been opened to relieve pressure, remove #3 test cock from housing.
   When repairing an 8" or 10" (200 or 250mm) device, remove both Victaulic couplers from body. Slide the downstream Victaulic coupler gasket to the downstream side of the housing. The upstream Victaulic coupler gasket stays in place.
2. Remove checks that are to be serviced.
3. Locate the service hole and thread in the service bolt by hand until it contacts the linkage. (Figure A)
4. Continue to thread in service bolt with the wrench until the service hole in the linkage is aligned with the service notches on the spring arbors. (Figure A)
5. Insert the Phillips screwdriver through the arbors and service hole of the linkage making sure that the tip of the screwdriver extends past the ends of the arbors by a minimum of 1/4" (6mm). (Figure B)
6. Back out the service bolt until load is transferred to the screwdriver. Continue to back out the service bolt until sufficient clearance is achieved to remove the complete spring mechanism.
7. To disconnect linkage, remove retaining clip and pin (store in a safe location for reinstallation).
8. To remove spring mechanism, grasp the screwdriver at the center and pull complete assembly straight out and store in a safe place.
9. Reinstall in reverse order of these instructions.

⚠ WARNING

While the spring mechanism is removed for check servicing; never pull the screwdriver out or off the support notches on the arbors. Doing so may cause bodily injuries.

Figure A

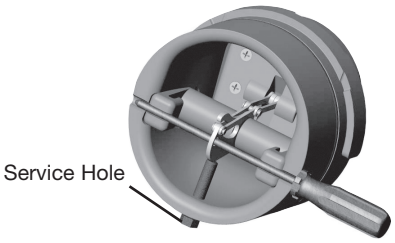

Figure B

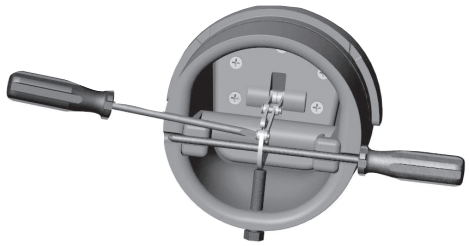

Service Relief Valve

Series 957, 957RPDA, LF957RPDA

⚠ WARNING

Prior to servicing the relief valve, it is mandatory to shut down water system by closing both the inlet and outlet shutoff valves and relieving pressure within the assembly by opening the #2, #3 and #4 test cocks.

DO NOT REMOVE SPIDER BUSHING FOR SERVICING

1. Disconnect the hose from the bottom cover plate to the relief valve.
2. An O-ring seals the relief valve body to the main housing. It is not necessary to tighten the connection beyond firm hand tightening. The relief valve should be able to be removed by unscrewing the relief valve from the housing.
3. Remove the cover plate of the relief valve by removing the four connecting screws.
4. Remove the rubber diaphragm from the relief valve. Be aware of how the diaphragm is configured so that it can be reinstalled in the same manner. The hard rubber tab in the diaphragm fits into a similar socket in the head of the piston. (Figure 1)
5. Hold the relief valve in both hands with the threaded end up and both thumbs on the head of the piston. Push up on the piston until the piston shaft with the attached E-clip is exposed. Remove the E-clip (Figure 2)
6. Remove the piston and spring from the relief valve housing and thoroughly clean all parts including the diaphragm. Inspect all rubber parts for damage and if damaged, replace them with new parts.
7. Reassemble the relief valve in the reverse order that it was disassembled.

Figure 1

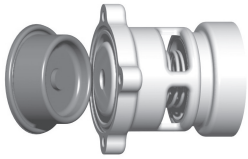

Figure 2



Service, Replacement Parts and Maintenance

Series 957, 957RPDA, LF957RPDA

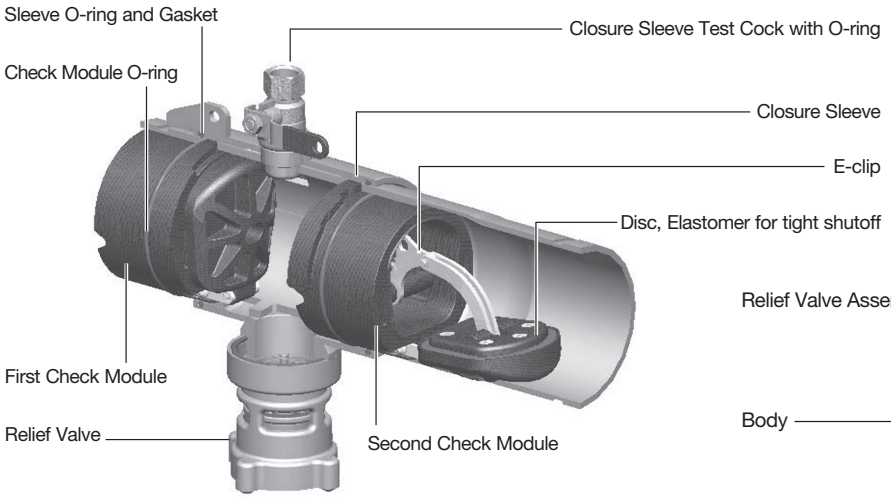

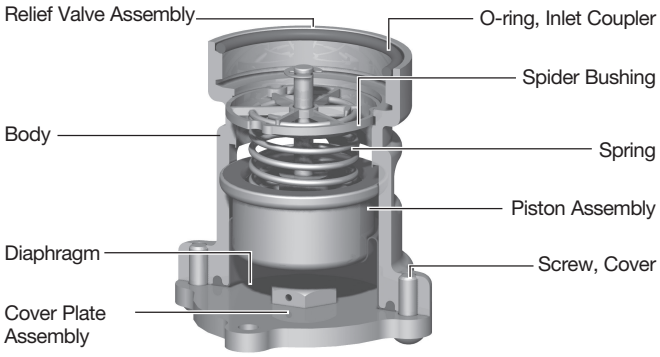

For repair kits and parts, refer to our Backflow Prevention Products Repair Kits & Service Parts price list PL-RP-BPD found on **www.watts.com.**

Troubleshooting Guide

Series 957, 957RPDA, LF957RPDA

Symptom	Cause	Solution
1. Relief valve discharges water while system is not flowing	a. #1 check is fouled	Remove and Clean #1 check
	b. Relief valve does not properly close	Service relief valve
	c. Municipal water pressure is fluctuating	Install check valve upstream of backflow assembly
2. Relief valve does not shut off properly	a. Fouled relief valve seat	Service relief valve
	b. Incorrectly Installed diaphragm	Remove diaphragn and correctly install
	c. Damaged rubber surface on piston	Replace with new piston
	d. Damaged or plugged pressure hose	

WARNING: This product contains chemicals known to the State of California to cause cancer and birth defects or other reproductive harm.
For more information: www.watts.com/prop65

Limited Warranty: Watts Regulator Co. (the "Company") warrants each product to be free from defects in material and workmanship under normal usage for a period of one year from the date of original shipment. In the event of such defects within the warranty period, the Company will, at its option, replace or recondition the product without charge.
THE WARRANTY SET FORTH HEREIN IS GIVEN EXPRESSLY AND IS THE ONLY WARRANTY GIVEN BY THE COMPANY WITH RESPECT TO THE PRODUCT. THE COMPANY MAKES NO OTHER WARRANTIES, EXPRESS OR IMPLIED. THE COMPANY HEREBY SPECIFICALLY DISCLAIMS ALL OTHER WARRANTIES, EXPRESS OR IMPLIED, INCLUDING BUT NOT LIMITED TO THE IMPLIED WARRANTIES OF MERCHANTABILITY AND FITNESS FOR A PARTICULAR PURPOSE.
The remedy described in the first paragraph of this warranty shall constitute the sole and exclusive remedy for breach of warranty, and the Company shall not be responsible for any incidental, special or consequential damages, including without limitation, lost profits or the cost of repairing or replacing other property which is damaged if this product does not work properly, other costs resulting from labor charges, delays, vandalism, negligence, fouling caused by foreign material, damage from adverse water conditions, chemical, or any other circumstances over which the Company has no control. This warranty shall be invalidated by any abuse, misuse, misapplication, improper installation or improper maintenance or alteration of the product.
Some States do not allow limitations on how long an implied warranty lasts, and some States do not allow the exclusion or limitation of incidental or consequential damages. Therefore the above limitations may not apply to you. This Limited Warranty gives you specific legal rights, and you may have other rights that vary from State to State. You should consult applicable state laws to determine your rights. **SO FAR AS IS CONSISTENT WITH APPLICABLE STATE LAW, ANY IMPLIED WARRANTIES THAT MAY NOT BE DISCLAIMED, INCLUDING THE IMPLIED WARRANTIES OF MERCHANTABILITY AND FITNESS FOR A PARTICULAR PURPOSE, ARE LIMITED IN DURATION TO ONE YEAR FROM THE DATE OF ORIGINAL SHIPMENT.**

WATTS®

ISO 9001-2008 CERTIFIED

A Watts Water Technologies Company

USA: Tel: (978) 688-1811 • Fax: (978) 794-1848 • www.watts.com
Canada: Tel: (905) 332-4090 • Fax: (905) 332-7068 • www.watts.ca

© 2013 Watts

21

REVIEWED BY CONTRACTOR
Kudlik Construction Ltd.
Name: Sandra Rousseau P.Eng
DATE: Jun 28, 2018

Mécanique Nordique
Plumbing
Heating
Ventillation
mecanique.nordique@hotmail.com

1255 Rue J.A.Bombardier
Lévis, Québec
G7A 2P4
Téléphone: 418-496-1109
Télécopieur: 418-496-3803

IQALUIT WWTP UPGRADE

DRAWING FOR APPROVAL

Ingineer : NUNAMI STANTEC

DRAWING #: AD-021

Section 22 13 18 23 05 00
Article 3.2.7 1.28
Plans
Application : FIRE COLLAR & FIRE SEALANT
Brand : HILTI
Model : CP643N FS-ONE MAX
Revised # :
Supplyer : HILTI

Pages incl. 3
Date : **2018-06-28**
By : **Mécanique Nordique Inc.**

STANTEC PROJECT #: 110126045
SUBMITTAL # AD-021

This review by Stantec is for general conformance with the design concept of Stantec's design of the:
☐ Architectural ☐ Electrical
☐ Structural ☐ Other
☑ Mechanical

component(s) only and does not mean that Stantec has verified or approves the shop drawing(s). The Contractor remains solely responsible for the shop drawing(s) and this review by Stantec does not relieve the Contractor of the Contractor's responsibility for errors or omissions in the shop drawing(s) or for meeting all requirements of the contract documents. This review does not mean that Stantec approves the detailed design inherent in the shop drawing, responsibility for which shall remain with the Contractor submitting same, nor does this review mean that Stantec accepts any deviation of the shop drawing(s) from the contract documents. The Contractor is responsible for confirming all dimensions and correlating them at the job site, for all construction means, methods and techniques, and for coordination of construction work of all trades, including coordination of all shop drawings.

Stantec

☑ REVIEWED
☐ REVIEWED, AS NOTED
☐ REVISE AND RESUBMIT
☐ NOT REVIEWED

DATE 2018-07-04
BY Brendan Zrum, P.Eng

Firestop Collar (CP 643N)

Product description

- A ready-to-use firestop collar, made of a galvanized steel housing and intumescent inserts for firestopping combustible pipes

Product features

- Ready-to-use collar
- No construction required
- Fast installation time
- Adjustable mounting tabs
- Low profile for tight installations

Areas of application

- Firestopping combustible pipes up to 6" diameter in penetrations through fire walls and floors
- Suitable for the following pipe materials:
- PVC, CPVC, ABS, PVDF, PP and FRPP

For use with

- Concrete, masonry, wood floor and gypsum wall assemblies
- Wall and floor assemblies rated up to 4 hours

Types of installation

- Wall: two collars, one on each side
- Floor: one collar on underside (bottom)

Example

- Waste water pipes
- Fresh water pipes

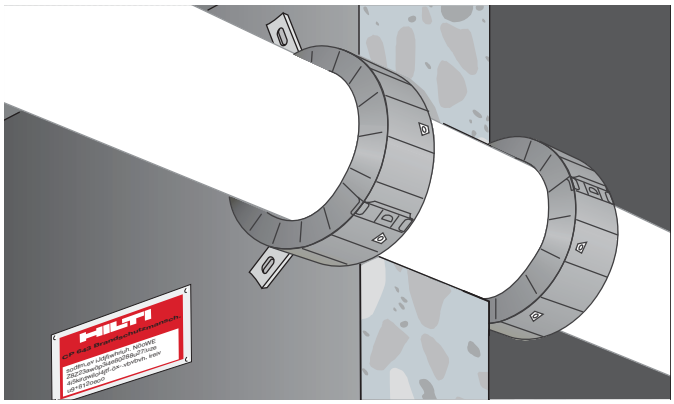

Technical Data	CP 643N		
Description	Pipe outside dia (in.)	Collar outside dia. (in.)	Collar Height (in.)	No. of hooks and fasteners
CP 643-50/1.5"N	1.4–2.0	2.8	0.9	2
CP 643-63/2"N	2.0–2.5	3.4	1.3	2
CP 643-90/3"N	2.6–3.6	4.9	1.7	3
CP 643-110/4"N	3.6–4.5	6.0	1.9	3
CP 643-160/6"N	6.6	9.8	1.9	4
Temperature resistance	-40°F to 140°F (–40°C to 60°C)		
Intumescent activation	Approx. 392°F (200°C)		
Expansion ratio (unrestricted)	Up to 1:10		
Tested in accordance with • UL 1479 • ASTM E 814 • ASTM G21 • CAN/ULC-S115			

FIRESTOP DEVICE
FOR USE IN THROUGH-PENETRATION FIRESTOP SYSTEMS
SEE UL FIRE RESISTANCE DIRECTORY 5N76

FM APPROVED

FBC SYSTEM COMPATIBLE
Visit fbcsystemcompatible.com.
FBC™ is a trademark of the Lubrizol Corporation.

Installation instructions for CP 643N

Notice

- Before handling, read Material Safety Data Sheet and product label for safe usage and health information.
- Instructions below are general guidelines — always refer to the applicable drawing in the UL Fire Resistance Directory or Hilti Firestop Systems Guide for complete installation information

Opening

1. Clean the plastic pipes. Expansion of the intumescent material during a fire acts to close the plastic pipe. Very dirty pipes (ie: with remains of mortar) may lead to a delay in this closing action. Soiled plastic pipes should, therefore, be cleaned in the area where the CP 643N Firestop Collar is to be installed.

Application of firestop system

2. Seal the opening if required. Gaps may be closed with FS-ONE. The approved methods vary and are given in the specific UL system.
3. Close the CP 643N Firestop Collar. Place the CP 643N Firestop Collar around the plastic pipe and lock the closure by applying firm pressure until it latches.
4. Attach fastening hooks. The fastening hooks can be attached to various points on the metal housing. This allows the fastening points to be made to suit the space available in each case. The hooks must be positioned as symmetrically as possible. The required number of fastening hooks is indicated on the packaging.
5. Fastening the CP 643N Firestop Collar. Only when fastened properly can CP 643N offer protection against fire.

a. Mark the fastening points.

b. Drill holes with a Hilti rotary hammer drill (i.e. TE 4-A18) or, depending on base material, fasten using Hilti powder-actuated tool.

c. To secure the CP 643N Firestop Collar, use Hilti anchors/fasteners.

d. For maintenance reasons, a penetration can be permanently marked with an identification plate and fastened in a visible position next to the seal.

Not for use

- With metal pipes
- In highly corrosive surroundings
- With unapproved anchors/fasteners

Storage

- Store only in the original packaging in a location protected from moisture

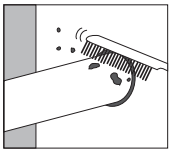

1. Clean plastic pipe.

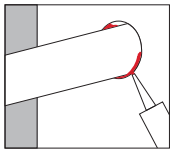

2. Close remaining gap to provide smoke and gas resistant seal.

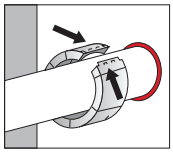

3. Close collar.

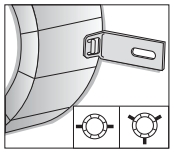

4. Attach fastening hooks.

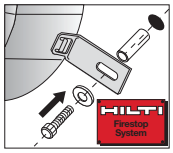

5. Fasten collar and identification plate (if required).

Hilti Firestop
Saving lives through innovation and education

Hilti. Outperform. Outlast.

High performance intumescent firestop sealant FS-ONE MAX

Product description

- Intumescent (expands when exposed to fire) firestop sealant that helps protect combustible and non-combustible penetrations for up to 4 hours fire rating

Applications

- Effectively seals most common through penetrations in a variety of base materials
- For use on concrete, masonry and drywall
- Mixed and multiple penetrations
- Metal pipe penetrations
- Insulated metal pipe penetrations
- Plastic pipe penetrations
- Cable bundles and trays
- HVAC penetrations

Advantages

- One product for a variety of common through penetrations
- Cost-effective and easy-to-use solution
- Water-based and paintable
- W-rated systems available
- Ethylene glycol-free
- Industry leading VOC results
- Convenient multi application firestop solution for penetrations

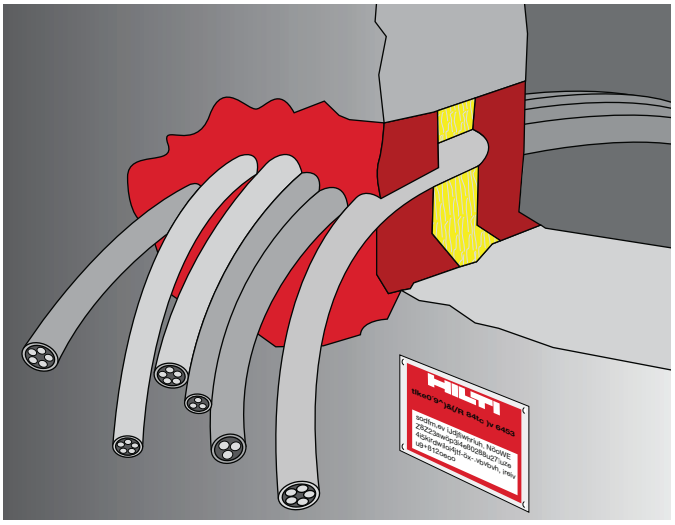

Technical Data*	
Chemical basis	Water-based acrylic dispersion
Color	Red
Application temperature	41°F to 104°F
Storage and transportation range	41°F to 77°F
Approx. cure time *	4 mm / 3 days
Shelf life	12 months **
Temperature resistance range	-4°F to 212°F
Mold and mildew performance	Class 0 (ASTM G21-13)
Mold and mildew resistant	Yes
Surface burning characteristics (ASTM E 84-14)	Flame Spread: 0 Smoke Development: 10
Approvals	California State Fire Marshal - in progress
Tested in accordance with	ASTM G21 ASTM E 90 CAN/ULC-S115 UL 1479 ASTM E 814 ASTM E84

* At 75°F (24°C) and 50% relative humidity
** from date of manufacture

CLASSIFIED C UL US
FILL, VOID OR CAVITY MATERIAL
FOR USE IN THROUGH-PENETRATION
FIRESTOP SYSTEMS
SEE UL FIRE RESISTANCE DIRECTORY
66Y7

FM APPROVED

FBC SYSTEM COMPATIBLE
Visit fbcsystemcompatible.com.
FBC™ is a trademark of the Lubrizol Corporation.

W rated

01/15 DBS

22

Mécanique Nordique
Plumbing
Heating
Ventillation
mecanique.nordique@hotmail.com
1255 Rue J.A.Bombardier Lévis QC G7A 2P4
Tél : (418) 496-1109 Fax : (418) 496-3803

REVIEWED BY CONTRACTOR
Kudlik Construction Ltd.
NAME: Sandra Rousseau P.Eng
DATE: Jul 03, 2018

IQUALUIT WWTP UPGRADES

DRAWING FOR APPROVAL

ENGINEER: **NUNAMI STANTEC LIMITED**

DRAWING #: AD-022

Section	:	22 05 23 VALVES FOR PLUMBING PIPING
Article	:	2.1 ,2.2 , 2.3 , 2.6 , 2.8
Plans	:	M603
Application	:	VALVES , CHECK VALVE , STRAINER
Brand	:	KITZ & TOYO
Model	:	
Revised #	:	
Supplyer	:	WOLSELEY
Date	:	**30/06/2018**
By	:	Martin Boucher

STANTEC PROJECT #: 110126045
SUBMITTAL # AD-022

This review by Stantec is for general conformance with the design concept of Stantec's design of the:
☐ Architectural ☐ Structural ☑ Mechanical ☐ Electrical ☐ Other

component(s) only and does not mean that Stantec has verified or approves the shop drawing(s). The Contractor remains solely responsible for the shop drawing(s) and this review by Stantec does not relieve the Contractor of the Contractor's responsibility for errors or omissions in the shop drawing(s) or for meeting all requirements of the contract documents. This review does not mean that Stantec approves the detailed design inherent in the shop drawing, responsibility for which shall remain with the Contractor submitting same, nor does this review mean that Stantec accepts any deviation of the shop drawing(s) from the contract documents. The Contractor is responsible for confirming all dimensions and correlating them at the job site, for all construction means, methods and techniques, and for coordination of construction work of all trades, including coordination of all shop drawings.

Stantec

☐ REVIEWED
☑ REVIEWED, AS NOTED
☐ REVISE AND RESUBMIT
☐ NOT REVIEWED

DATE 2018-07-04
BY Brendan Zrum, P.Eng

TAG: SECTION 22 05 23 2.1 BALL VALVE SOLDERED

RWV®

ECO-VALVE

Figure # 5049AB

Low Lead Brass Ball Valve (1/2"-2")

NOTE RED-WHITE = TOYO



Product Features

- 150# WSP / 600# WOG
- Forged Brass Body
- Full Port
- Adjustable Packing
- Solder Ends
- Blow-Out Proof Stem
- MSS-SP-110
- AB1953, NSF-61, NSF-372 Certified

Certified to ANSI/NSF 61

Pressure/Temperature Rating	
600 PSI from 15F to 160 F	150 PSI MAX at 366F

Connection Working Pressure				
Solder used in joints	Working Temp deg. °F	Maximum working pressure (PSI)		
		3/8" - 1"	1-1/4" -2"	2-1/2" - 3"
95-5 Tin Antimony (ASTM B32 grade 95TA)	100	500	400	300
	150	400	350	275
	200	300	250	200
	250	200	175	150

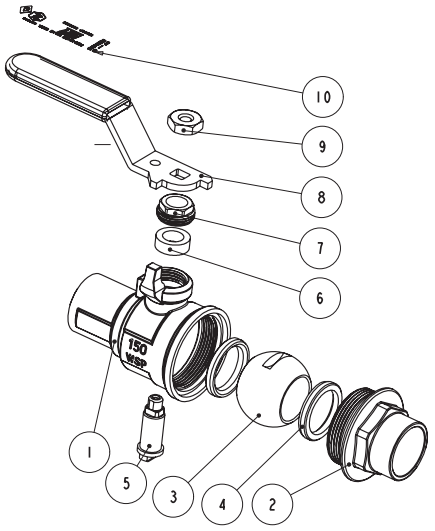

Materials & Specifications

Item	Description	Material	Specification
1	Body	Low Lead Brass	C28500
2	End piece	Low Lead Brass	C28500
3	Ball	Low Lead Brass/Cr Plated	C28500
4	Seat	PTFE	PTFE
5	Stem	Low Lead Brass	C28500
6	Packing	PTFE	PTFE
7	Packing nut	Brass	B124 C37700
8	Handle	Steel/Dc plated	A36 Dacromet
9	Handle nut	Steel/Zn plated	A36
10	Valve info	-	-

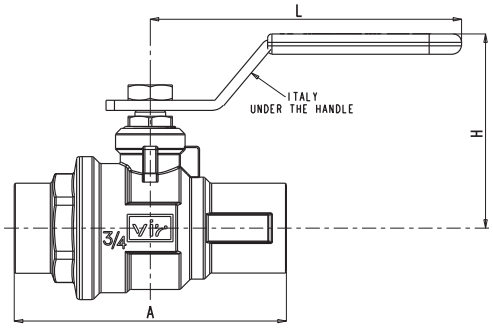

Dimensions, Weights (inches-lbs.) & Valve Data

Size	1/2	3/4	1	1-1/4	1-1/2	2
Ø	0.627-0.631	0.877-0.881	1.128-1.131	1.378-1.381	1.628-1.632	2.128-2.132
A	2.60	3.15	3.31	3.86	4.53	5.51
C	0.51	0.75	0.91	0.97	1.09	1.34
H	2.13	2.24	2.57	2.79	3.28	3.58
L	3.60	3.60	4.98	4.98	5.57	5.57
P	0.59	0.79	0.98	1.26	1.57	1.97
Cv	15	30	60	110	130	360
Wt	0.56	0.79	1.21	2.04	3.02	4.56

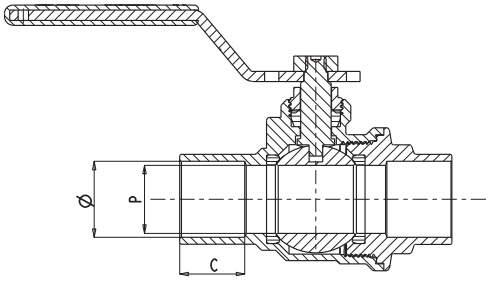

RED-WHITE VALVE CORP.
20600 Regency Lane, Lake Forest, CA 92630
TEL: 949.859.1010 • FAX: 949.859.7200 • www.redwhitevalvecorp.com

(160510)

237AB

Lead Free Brass Solder Ends Swing Check Valve

Feature

TAG: SECTION 22 05 23 2.2 CHECK VALVE

125# WSP / 200# WOG
Lead free brass body
Lead free brass disc
Solder x Solder
Solder ends (ASME B16.22)
Swing check
"Y" Pattern
MSS-SP-80
AB1953, NSF/ANSI 61 & 372 certified

Meet BAA requirement

C US
NSF/ANSI 61 & 372



Pressure/ Temperature rating	
200 psi from 15 °F to 160 °F	125 psi max. at 366 °F

NOTE : RED-WHITE = TOYO

Material

	Part	Material	Specification
1	Body	Lead Free Brass	ASTM B927 C28500
2	Disc	Lead Free Brass	ASTM B927 C28500
3	Stem	Lead Free Brass	ASTM B927 C28500
4	Screw	Lead Free Brass	ASTM B927 C28500
5	Gasket	PTFE	PTFE
6	Cap	Lead Free Brass	ASTM B927 C28500

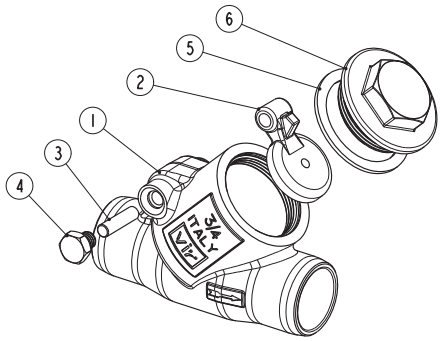

Dimension, Cv, Weight

Size	A [in]	H [in]	P [in]	Cv	Wt. L [lb]
½"	2.60	1.65	0.59	5.33	0.35
¾"	3.39	1.97	0.75	10.5	0.87
1"	4.09	2.28	0.98	19.0	1.33
1¼"	4.72	2.71	1.26	32.8	2.04
1½"	5.35	3.19	1.50	50.6	2.80
2"	6.69	3.86	1.97	88.1	4.78

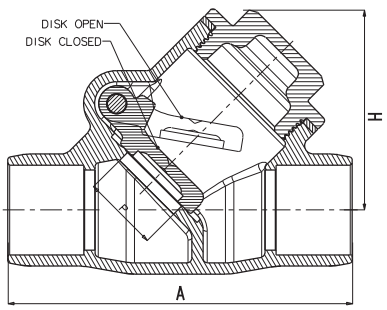

Drawings, photos and data are provided for information only and subject to change without notice. No part of this document may be reproduced, copied, modified or adapted, without the prior written consent of the copyright owner, unless otherwise indicated.
The Drinking Water Act has defined lead free as having the average wetted surface ratio of the fixture to contain less than .25% of lead per volume.
© 2018 Red-White Valve Corp. All Rights Reserved

TAG: SECTION 22 05 22 2.3 DRAIN VALVE KITZ

FORGED BRASS BALL VALVE

CAP & CHAIN

Two Piece Body • Full Port

Blowout Proof Stem • Chrome Plated Ball • PTFE Seats and Seals

CODE # 68C (AKTAFC)
THREADED x HOSE

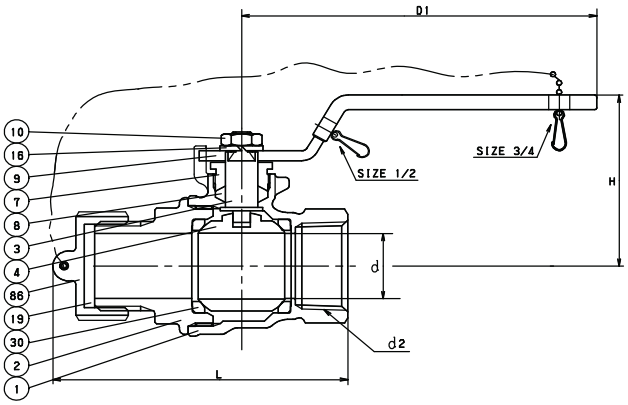

CODE # 69C (CTAFC)
SOLDER* x HOSE

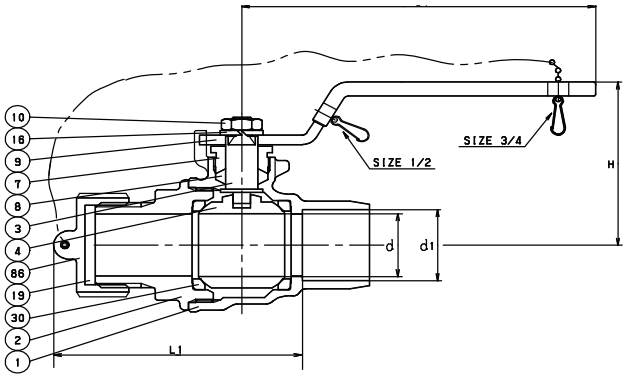

**REFERENCE VALVE INSTALLATION TIPS FOR SOUND SOLDER JOINTS (PAGE BV-66) OR SEE INSTALLATION SHEET PACKAGED WITH VALVE.*

STANDARDS	
END TO END	KITZ
THREADED ENDS	ANSI B1.20.1/ANSI B2.4 ¾ 11.5 NHR
SOLDER JOINT ENDS	ANSI B16.18/ANSI B2.4 ¾ 11.5 NHR
WALL THICKNESS	KITZ
CONFORMS TO MSS-SP 110	

PRESSURE/TEMPERATURE
150 PSI - SATURATED STEAM TO 366ºF
600 PSI - NON-SHOCK COLD WATER, OIL OR GAS

NOTE: PRESSURE/TEMPERATURE CHART - PAGE BV-29

MATERIAL LIST

NO.	NAME OF PART	SPECIFICATION
1	BODY	FORGED BRASS (B283, C37700)
2	BODY CAP	BRASS ROD (B16)
	(¾")	FORGED BRASS (B283, C37700)
3	STEM	(1) SPECIAL BRASS (KITZ, "K-METAL")
4	BALL	(2) FORGED BRASS (B283, C37700)
7	GLAND	BRASS ROD (B16)
8	GLAND PACKING	PTFE
9	HANDLE	(3) CARBON STEEL
10	HANDLE NUT	CARBON STEEL
16	SPRING WASHER	CARBON STEEL
19	GASKET	NBR
30	BALL SEATS	PTFE
86	CAP & CHAIN	PP/BRASS

NOTES:
(1) PROPRIETARY DEZINCIFICATION RESISTANT MATERIAL.
(2) CR. PLATING
(3) ELECTROPLATED ZINC WITH PLASTIC COVERING

DIMENSIONS - WEIGHTS - QUANTITIES

d2 SIZE	d	H	D1	L	L1	d1 Max. Min	APPROX. NET WT.	CARTON QTY
½	.59	1.65	3.23	2.93	2.46	.631 .627	52	96
¾	.79	2.01	3.94	3.30	2.79	.881 .877	50	60

SPECIFICATION

Approved valve shall have two piece forged brass body, chrome plated ball, blowout proof stem, PTFE seats/seals, PP or brass cap & chain and full port design. Valves shall be pressure rated to 150 WSP/600 WOG and conform to MSS-SP 110.

KITZ Code No. 68C (AKTAFC) Threaded Ends
69C (CTAFC) Solder Ends

STRAINER
CLASS 150 BRONZE

Y-Pattern • Threaded Cap and Ends
Stainless Steel (304) Punched Screen

CODE # 15 (AKYU)
THREADED

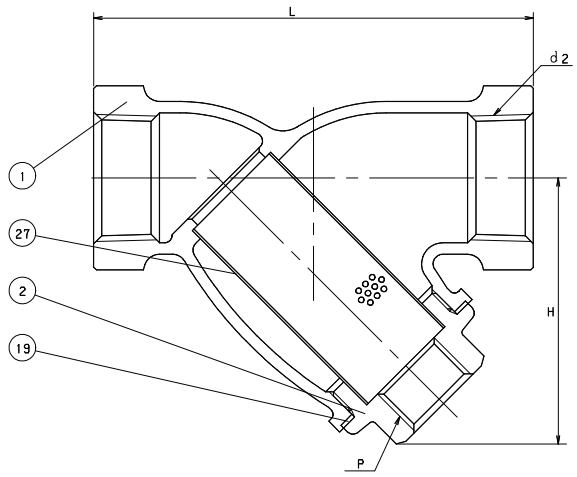

CODE # 16 (CYU)
SOLDER*

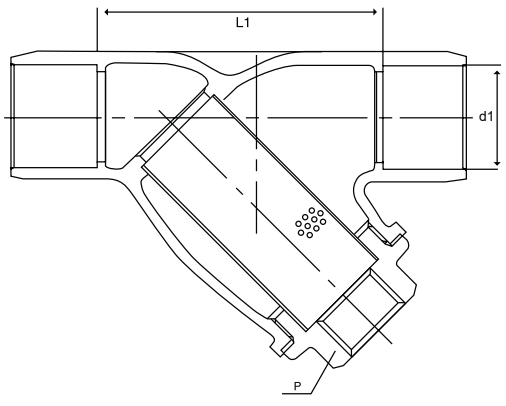

STANDARDS	
END TO END	KITZ
THREADED ENDS	ANSI B1.20.1
SOLDER JOINT ENDS	ANSI B16.18
WALL THICKNESS	KITZ
DESIGN	KITZ

PRESSURE/TEMPERATURE

150 PSI - SATURATED STEAM TO 366ºF
- FLUID TO 406ºF
300 PSI NON-SHOCK COLD WATER, OIL OR GAS

**SEE PRESSURE/TEMPERATURE LIMITATIONS FOR SOLDER JOINT VALVES - PAGE BIV-50.*

MATERIAL LIST

NO.	NAME OF PART	SPECIFICATION
1	BODY	CAST BRONZE (B584, C84400)
2	*CAP	FORGED BRASS (B283, C37700)
19	GASKET	NON-ASBESTOS SHEET
27	SCREEN	STAINLESS STEEL (A167, TYPE 304)

* Cap supplied without plug. Blind cap optionally available.

DIMENSIONS - WEIGHTS - QUANTITIES

d2 SIZE	H	L	P	L1	d1 Max.	d1 Min.	APPROX. NET WT.	CARTON QTY
1/4	1.73	2.76	1/4	–	–	–	0.56	96
3/8	1.73	2.76	1/4	–	.506	.502	0.56	96
1/2	1.93	3.15	1/4	2.15	.631	.627	0.76	80
3/4	2.28	3.94	1/4	2.63	.881	.877	1.29	48
1	2.80	4.53	1/2	3.10	1.132	1.128	1.86	36
1 1/4	3.19	5.31	1/2	3.77	1.382	1.378	2.92	24
1 1/2	3.82	6.30	3/4	4.51	1.633	1.628	4.31	16
2	4.72	7.68	1	5.59	2.133	2.128	7.25	8
2 1/2	5.83	9.06	1 1/4	–	2.633	2.628	13.00	1
3	7.09	9.45	1 1/2	–	3.133	3.128	19.00	1

NOTE: The standard punched screen is approximately 12 mesh screen. Other mesh screens are available (see spare parts in price sheet).

NOTE: NOT INTENDED FOR USE IN A POTABLE WATER SYSTEM - COMPLIANT STATEMENT PROP 65, STATE OF CALIFORNIA

TAG: SECTION 22 05 23 2.8 BUTTERFLY VALVE

"Apollo" Valves

SUBMITTAL SHEET

LEAD FREE

LD141/WD141 Series

General Purpose **Butterfly Valves**

Job Name:	
Job Location:	
Engineer:	
Contractor:	
Tag:	
PO Number:	
Representative:	
Wholesale Distributor:	



DESCRIPTION

The Apollo® LD141/WD141 Series Ductile Iron Butterfly Valves are ideal for use in Industrial and HVAC/Mechanical applications. The WD141 Series is a wafer style valve and the LD141 Series is a companion lug style.

FEATURES

- Compatible with ANSI 125# & 150# Flanges
- ISO 5211 Top Plate Allows Choice of Apollo® Pneumatic Actuators and manual operators
- Conforms to MSS SP-67 & API 609
- LD141 Series Suitable for End of Line Service to Rated Pressure (2" - 12")
- 3" -24" meet performance requirements of AWWA C-504

PERFORMANCE RATING

- Pressure Rating: 2" to 12": 200 psi
- Pressure Rating: 14" to 24": 150 psi

APPROVALS

- NSF/ANSI 372 Lead Free
- CRN 0C12102.8CL

MATERIAL OPTIONS

Body
- Ductile Iron ASTM A536, (65-45-12)

Disc Material
- Aluminum Bronze
- Ductile Iron A536 Nickel Plated
- Stainless Steel, CF8M

Seat Material
- EPDM: -20°F to +250°F Intermittent, 225°F Continuous
- BUNA-N: +10°F to +180°F

Operator
- -0 - None
- -1 - 10 Position Handle
- -2 - Gear Operator (12" handwheels)
- -3 - Infinite Position Handle
- -4 - Locking Handle
- -5 - Gear Operator w/ Chain Wheel
- -7 - Locking Gear Operator
- -8 - Locking Gear Operator w/ Chain Wheel

Provide with nickel plated ductile iron disc

Provide with 10 position lever handle

STANDARD MATERIALS LIST

Part Name	Material
Body	Ductile Iron ASTM A536
Bushings	Glass Reinforced Epoxy Resin
Stem Seal	Buna-N
Shaft	416 SS ASTM A276 Type 416

TORQUE RATING * (INCH - LBS)

Valve Size	Valve Size	Full Rated Pressures (psi)				Flow
In.	mm	ΔP 50	ΔP 100	ΔP 150	ΔP 200	Cv Full Open
2	50	100	106	111	117	115
2.5	65	150	163	176	189	196
3	80	207	220	232	244	302
4	100	290	323	357	390	600
5	125	423	481	540	598	1022
6	150	599	691	783	875	1579
8	200	1060	1183	1307	1430	3136
10	250	1671	1872	2074	2275	5340
12	300	2568	2795	3023	3250	8250
14	350	2640	3070	3500	N/A	11917
16	400	4260	4880	5500	N/A	16388
18	450	6287	7243	8200	N/A	21705
20	500	8360	9180	10000	N/A	27908
24	600	15427	16813	18200	N/A	43116

** Lubricating media service*

WEIGHT

Weight WD141 (lbs.)	Weight LD141 (lbs.)
6	9
8	10
9	11
11	18
15	22
18	26
32	43
47	66
-	102
-	148
-	206
-	277
-	410
-	592

** LEAD FREE: The wetted surfaces of this product shall contain no more than 0.25% lead by weighted average. Complies with Federal Public Law 111-380. ANSI 3rd party approved and listed.*

Apollo Valves / **Conbraco Industries, Inc.**
701 Matthews Mint-Hill Road, Matthews, NC 28105 USA
www.**apollovalves**.com | (704) 841-6000

This specification is provided for reference only. Conbraco Industries Inc. reserves the right to change any portion of this specification without notice and without incurring obligation to make such changes to Conbraco products previously or subsequently sold. Please visit our website @ www.apollovalves.com for the most current information.

AALBERTS INDUSTRIES

"Apollo" Valves

SUBMITTAL SHEET

LEAD FREE

LD141/WD141 Series

General Purpose **Butterfly Valves**

WD MODEL
2" - 12"

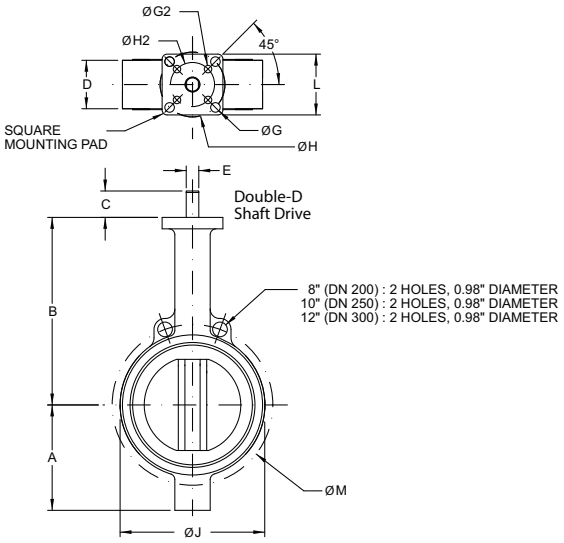

LD MODEL

2" - 12"

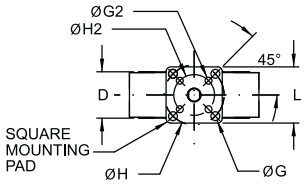

14" - 24"

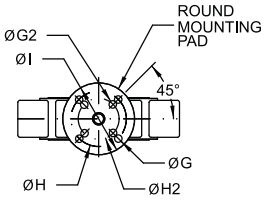

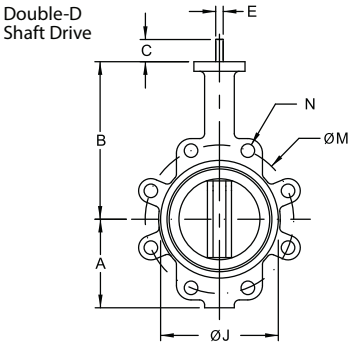

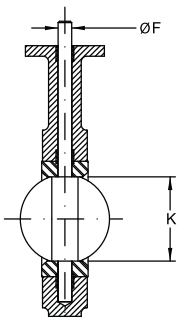

Shaft Drive:
Double-D (14")
Round & Keyed (16" & larger)

DOUBLE-D AND KEYED STEM

Size Inches	Size DN	Dimensions in Inches																	
		A	B	C	D	E	ØF	ØG	ØG2	Key	ØH	ØH2	ØI	ØJ	K	L	M	N (WD)	N (LD)
2	50	3.25	6.375	1.25	1.75	0.394	0.496	0.375	--	--	2.756	--	2.699	4	2.09	1.113	4.75	0.688	.625-11
2.5	65	3.75	6.880	1.25	1.88	0.394	0.496	0.375	--	--	2.756	--	2.699	4.75	2.54	1.706	5.50	0.688	.625-11
3	80	4.00	7.130	1.25	1.88	0.394	0.496	0.375	--	--	2.756	--	2.699	5.13	3.09	2.450	6.00	0.688	.625-11
4	100	4.88	7.880	1.25	2.13	0.472	0.621	0.375	--	--	2.756	--	2.699	6.75	4.09	3.488	7.50	0.688	.625-11
5	125	5.38	8.380	1.25	2.25	0.551	0.745	0.375	--	--	2.756	--	2.699	7.75	4.85	4.296	8.50	0.813	.625-11
6	150	5.88	8.880	1.25	2.25	0.551	0.745	0.375	--	--	2.756	--	2.699	8.63	6.13	5.697	9.50	0.813	.751-10
8	200	7.13	10.250	1.75	2.50	0.669	0.870	0.563	0.438	--	4.921	4.015	4.606	10.56	7.89	7.468	11.75	0.813	.750-10
10	250	8.25	11.500	1.88	2.75	0.866	1.120	0.563	0.438	--	4.921	4.015	4.606	13.06	9.89	9.484	14.25	0.938	.750-10
12	300	9.75	13.250	1.88	3.13	0.945	1.244	0.563	--	--	4.921	--	4.606	16	11.89	11.456	17.00	0.938	.875-9
14*	350	11.00	14.500	1.88	3.13	0.945	1.244	0.563	--	--	4.921	--	Ø5.91	17.13	13.38	13.000	18.75	1.060	.875-9
16*	400	12.00	15.750	2.00	3.50	--	1.313	0.563	--	0.313	4.921	--	Ø5.91	20	15.38	14.970	21.25	1.060	1.00-8
18*	450	14.38	16.630	2.00	4.25	--	1.500	0.813	--	0.375	6.496	--	Ø8.27	21.38	17.38	16.847	22.75	1.250	1.00-8
20*	500	14.63	18.880	2.50	5.25	--	1.625	0.813	--	0.375	6.496	--	Ø8.27	23.31	19.38	18.650	25.00	1.250	1.125-7
24*	600	18.00	22.130	2.75	6.13	--	2.000	0.813	--	0.500	6.496	--	Ø8.27	27.88	23.38	22.558	29.50	1.380	1.125-7

** LD141 Series only*

Apollo Valves / **Conbraco Industries, Inc.**
701 Matthews Mint-Hill Road, Matthews, NC 28105 USA
www.**apollovalves**.com | (704) 841-6000

This specification is provided for reference only. Conbraco Industries Inc. reserves the right to change any portion of this specification without notice and without incurring obligation to make such changes to Conbraco products previously or subsequently sold. Please visit our website @ www.apollovalves.com for the most current information.

AALBERTS INDUSTRIES

23

REVIEWED BY CONTRACTOR
Kudlik Construction Ltd.
NAME: Sandra Rousseau P.Eng
DATE: Jul 17, 2018

Mécanique Nordique
Plumbing
Heating
Ventillation
mecanique.nordique@hotmail.com

1255 Rue J.A.Bombardier
Lévis, Québec
G7A 2P4
Téléphone: 418-496-1109
Télécopieur: 418-496-3803

IQALUIT WWTP UPGRADE

DRAWING FOR APPROVAL

Ingineer : NUNAMI STANTEC

DRAWING #: AD-023R2

Section	23 05 22	VALVES -BRONZE FOR HEATING
Article	2.1 , 2.2 ,	2.3 , 2.4 , 2.5 , 2.6 , 2.7
Plans	M-603	
Application	: VALVES ,	CHECK VALVES , STRAINER , CBV
Brand	: KITZ ,	TOYO , ARMSTRONG , APOLLO
Model	: Different	
Revised #	: 2	
Supplyer	: Wolseley	
Pages incl.	33	
Date	: **2018-07-17**	
By	: **Mécanique Nordique Inc.**	

STANTEC PROJECT #: 110126045

SUBMITTAL # AD-023R2

This review by Stantec is for general conformance with the design concept of Stantec's design of the:

- ☐ Architectural
- ☐ Structural
- ☑ Mechanical
- ☐ Electrical
- ☐ Other

Stantec

component(s) only and does not mean that Stantec has verified or approves the shop drawing(s). The Contractor remains solely responsible for the shop drawing(s) and this review by Stantec does not relieve the Contractor of the Contractor's responsibility for errors or omissions in the shop drawing(s) or for meeting all requirements of the contract documents. This review does not mean that Stantec approves the detailed design inherent in the shop drawing, responsibility for which shall remain with the Contractor submitting same, nor does this review mean that Stantec accepts any deviation of the shop drawing(s) from the contract documents. The Contractor is responsible for confirming all dimensions and correlating them at the job site, for all construction means, methods and techniques, and for coordination of construction work of all trades, including coordination of all shop drawings.

- ☐ REVIEWED
- ☑ REVIEWED, AS NOTED
- ☐ REVISE AND RESUBMIT
- ☐ NOT REVIEWED

DATE 2018-07-20

BY Brendan Zrum, P.Eng

TAG: SECTION 23 05 23 2.1 BALL VALVE SOLDERED

RWV®

ECO-VALVE

Figure # 5049AB

Low Lead Brass Ball Valve (1/2"-2")

NOTE RED-WHITE = TOYO



Product Features

- 150# WSP / 600# WOG
- Forged Brass Body
- Full Port
- Adjustable Packing
- Solder Ends
- Blow-Out Proof Stem
- MSS-SP-110
- AB1953, NSF-61, NSF-372 Certified

Certified to ANSI/NSF 61

Pressure/Temperature Rating	
600 PSI from 15F to 160 F	150 PSI MAX at 366F

Connection Working Pressure				
Solder used in joints	Working Temp deg. °F	Maximum working pressure (PSI)		
		3/8" - 1"	1-1/4" -2"	2-1/2" - 3"
95-5 Tin Antimony (ASTM B32 grade 95TA)	100	500	400	300
	150	400	350	275
	200	300	250	200
	250	200	175	150

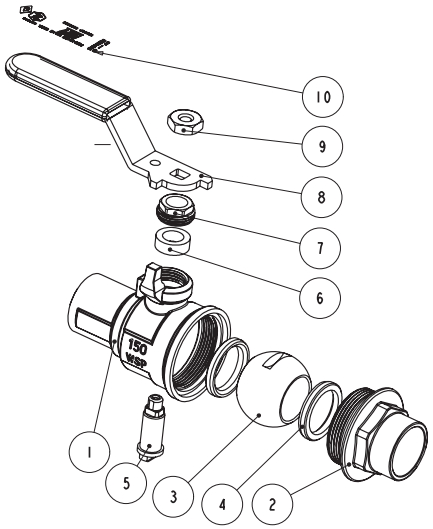

Materials & Specifications

Item	Description	Material	Specification
1	Body	Low Lead Brass	C28500
2	End piece	Low Lead Brass	C28500
3	Ball	Low Lead Brass/Cr Plated	C28500
4	Seat	PTFE	PTFE
5	Stem	Low Lead Brass	C28500
6	Packing	PTFE	PTFE
7	Packing nut	Brass	B124 C37700
8	Handle	Steel/Dc plated	A36 Dacromet
9	Handle nut	Steel/Zn plated	A36
10	Valve info	-	-

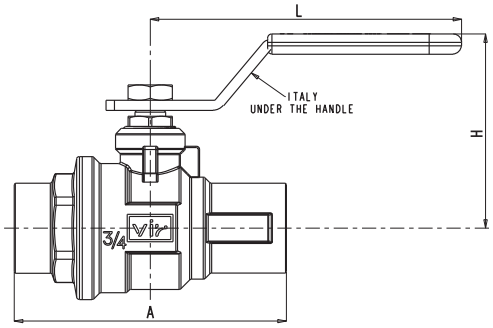

Dimensions, Weights (inches-lbs.) & Valve Data

Size	1/2	3/4	1	1-1/4	1-1/2	2
Ø	0.627-0.631	0.877-0.881	1.128-1.131	1.378-1.381	1.628-1.632	2.128-2.132
A	2.60	3.15	3.31	3.86	4.53	5.51
C	0.51	0.75	0.91	0.97	1.09	1.34
H	2.13	2.24	2.57	2.79	3.28	3.58
L	3.60	3.60	4.98	4.98	5.57	5.57
P	0.59	0.79	0.98	1.26	1.57	1.97
Cv	15	30	60	110	130	360
Wt	0.56	0.79	1.21	2.04	3.02	4.56

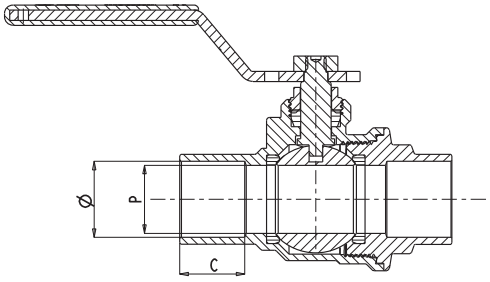

RED-WHITE VALVE CORP.
20600 Regency Lane, Lake Forest, CA 92630
TEL: 949.859.1010 • FAX: 949.859.7200 • www.redwhitevalvecorp.com

TAG: SECTION 23 05 22 2.1 BALL VALVE NPT

Lead Free Brass Full Port Ball Valve

NOTE RED-WHITE = TOYO



HEATING BALL VALVES

Feature

150# WSP / 600# WOG
Lead free brass body
Full port
Adjustable packing
FNPT x FNPT
Threaded ends (ASME B1.20.1-NPT)
Blow-out proof stem
MSS-SP-110
550 psi for UL use (1½" & 2")
CSA ½, 5 & 125 psi (½" - 2")
CSA ½ & 5 psi (2½" & 3")
UL approved (¼" - 2")
FM approved (½" - 2")
AB1953, NSF/ANSI 61 & 372 certified

Meet BAA requirement

NSF/ANSI 61 & 372

Pressure/ Temperature rating	
600 psi from 15 °F to 160 °F	150 psi max. at 366 °F

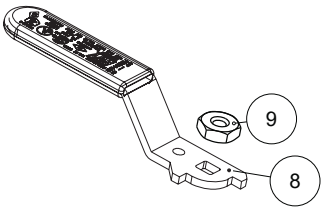

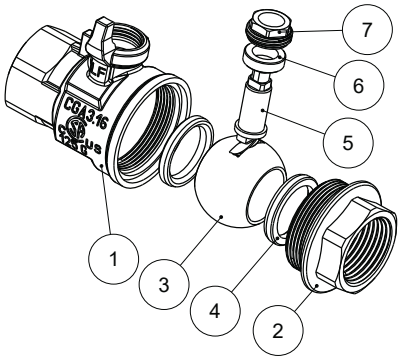

Material

	Part	Material	Specification
1	Body	Lead Free Brass	C28500
2	End piece	Lead Free Brass	C28500
3	Ball	Lead Free Brass / Cr plated	C28500
4	Seat	PTFE	PTFE
5	Stem	Lead Free Brass	C28500
6	Packing	PTFE	PTFE
7	Packing nut	Brass	B124 C37700
8	Handle	Steel / Geomet® plated	A36
9	Handle nut	Steel / Zn plated	A36

Dimension, Cv, Weight

	A [in]	C [in]	H [in]	L [in]	P [in]	Cv	Wt. [lb]
¼"	1.73	0.45	1.55	3.19	0.39	8	0.34
⅜"	1.73	0.45	1.55	3.19	0.39	8	0.32
½"	2.13	0.55	2.13	3.60	0.59	15	0.58
¾"	2.56	0.59	2.26	3.60	0.79	30	0.86
1"	2.92	0.71	2.57	4.98	0.98	60	1.34
1¼"	3.39	0.73	2.79	4.98	1.26	110	2.14
1½"	3.90	0.77	3.28	5.57	1.57	130	3.12
2"	4.45	0.81	3.58	5.57	1.97	360	4.82
2½"	6.02	1.18	4.70	11.07	2.56	450	9.78
3	6.81	1.22	5.15	11.07	3.15	620	13.9
4	7.64	1.32	5.64	11.07	3.94	1200	20.4

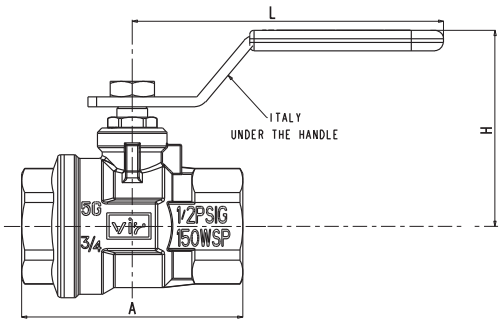

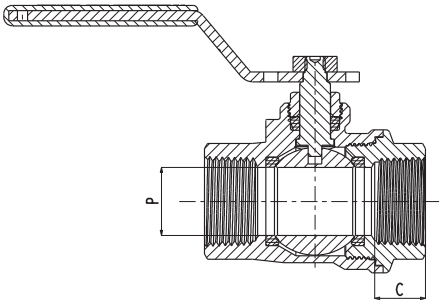

Drawings, photos and data are provided for information only and subject to change without notice. No part of this document may be reproduced, copied, modified or adapted, without the prior written consent of the copyright owner, unless otherwise indicated.
The Drinking Water Act has defined lead free as having the average wetted surface ratio of the fixture to contain less than .25% of lead per volume.
© 2018 Red-White Valve Corp. All Rights Reserved

236AB

Lead Free Brass Threaded Ends Swing Check Valve

TAG: SECTION 23 05 22 2.2 CHECK VALVE

Feature

125# WSP / 200# WOG
Lead free brass body
Lead free brass disc
FNPT x FNPT
Threaded ends (ASME B1.20.1-NPT)
Swing check
"Y" Pattern
MSS-SP-80
AB1953, NSF/ANSI 61 & 372 certified

Meet BAA requirement

C US
NSF/ANSI 61 & 372



Pressure/ Temperature rating	
200 psi from 15 °F to 160 °F	125 psi max. at 366 °F

NOTE : RED-WHITE = TOYO

Material

	Part	Material	Specification
1	Body	Lead Free Brass	ASTM B927 C28500
2	Disc	Lead Free Brass	ASTM B927 C28500
3	Stem	Lead Free Brass	ASTM B927 C28500
4	Screw	Lead Free Brass	ASTM B927 C28500
5	Gasket	PTFE	PTFE
6	Cap	Lead Free Brass	ASTM B927 C28500

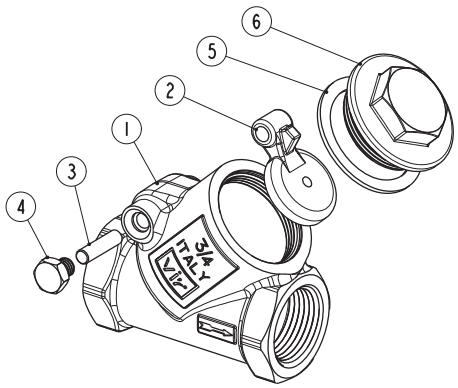

Dimension, Cv, Weight

Size	A [in]	H [in]	P [in]	Cv	Wt. L [lb]
½"	2.21	1.65	0.59	5.33	0.56
¾"	2.76	1.97	0.75	10.5	0.86
1"	3.15	2.28	0.98	19.0	1.28
1¼"	3.78	2.71	1.26	32.8	2.06
1½"	4.33	3.19	1.50	50.6	2.84
2"	5.04	3.86	1.97	88.1	4.46

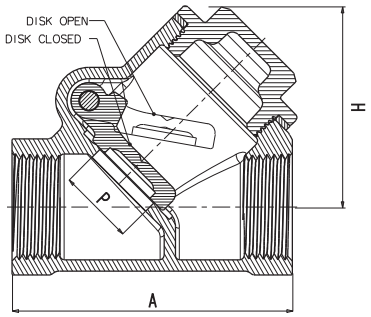

Drawings, photos and data are provided for information only and subject to change without notice. No part of this document may be reproduced, copied, modified or adapted, without the prior written consent of the copyright owner, unless otherwise indicated.
The Drinking Water Act has defined lead free as having the average wetted surface ratio of the fixture to contain less than .25% of lead per volume.
© 2018 Red-White Valve Corp. All Rights Reserved

Figure # 435

Cast Iron Flanged Swing Check Valve (2”-12”)

TAG: SECTION 23 05 22 2.2 CHECK VALVE

Product Features

- 125# WSP / 200# WOG
- Cast Iron Body
- Flanged Ends per ANSI B16.5
- IBBM
- Bolted Cap
- MSS-SP-71



Materials & Specifications

Item	Description	Material	Specification
1	Body	Cast Iron	A126-B
2	Seat Ring	Bronze	B62-C83600
3	Disc Ring	Bronze	B62-C83600
4	Disc	Cast Iron	A126-B
5	Hinge	Cast Steel	A216-WCB
6	Nut	Steel	A563-A
7	Pin	Stainless Steel	304
8	Washer	Stainless Steel	A276-410
9	Hinge Pin	Stainless Steel	304
10	Gasket	Compressed Sheet	Non-asbestos
11	Cover / Cap	Steel	A36
12	Cover Bolt	Steel	A307-B
13	Cover Nut	Steel	A563-A
14	Eye Bolt (6-12”)	Steel	A36
15	Plug	Steel	A307-B
16	Name Plate	Aluminum	B209
17	Stop Bolt	Steel	A307-B
18	Stop Nut	Steel	A563-A

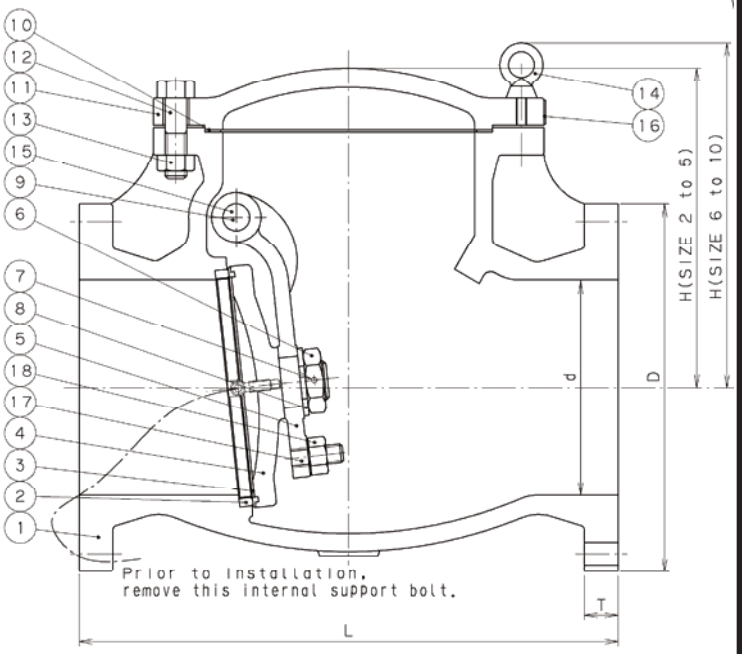

Dimensions, Weights (inches-lbs.) & Valve Data

Size	2	2-1/2	3	4	5	6	8	10	12
C	4.75	5.5	6	7.5	8.5	9.5	11.75	14.25	17
D	6	7	7.5	9	10	11	13.5	16	19
d	2	2.5	3	4	5	6	8	10	12
G	5/8	5/8	5/8	5/8	3/4	3/4	3/4	7/8	7/8
H	6.0	6.38	6.93	8.66	8.9	12.09	12.8	15.12	16.77
h	.75	.75	.75	.75	.88	.88	.88	1	1
L	8	8.5	9.5	11.5	13	14	19.5	24.5	27.5
N = Qty	4	4	4	8	8	8	8	12	12
T	.62	.69	.75	.94	.94	1	1.12	1.19	1.25
Cv	110	143	206	440	575	830	1500	2370	3470
Wt.- lbs.	31	44	55	86	130	154	279	407	595

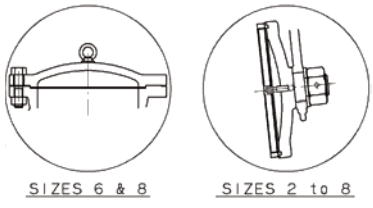

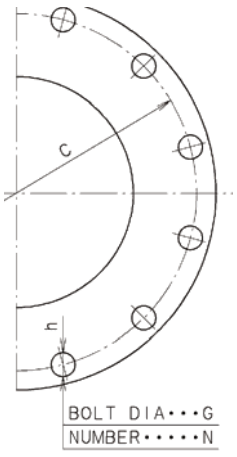

RED-WHITE VALVE CORP. 20600 Regency Lane • Lake Forest, CA 92630
tel: 949.859.1010 • fax: 949.859.7200 • www.redwhitevalvecorp.com

FORGED BRASS BALL VALVE

CAP & CHAIN

Two Piece Body • Full Port

Blowout Proof Stem • Chrome Plated Ball • PTFE Seats and Seals

CODE # 68C (AKTAFC)
THREADED x HOSE

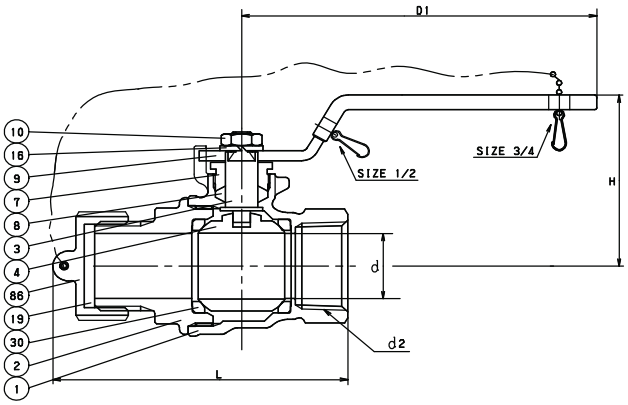

CODE # 69C (CTAFC)
SOLDER* x HOSE

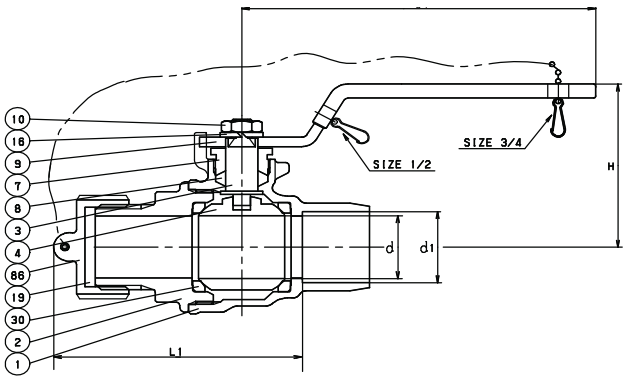

**REFERENCE VALVE INSTALLATION TIPS FOR SOUND SOLDER JOINTS (PAGE BV-66) OR SEE INSTALLATION SHEET PACKAGED WITH VALVE.*

STANDARDS	
END TO END	KITZ
THREADED ENDS	ANSI B1.20.1/ANSI B2.4 ¾ 11.5 NHR
SOLDER JOINT ENDS	ANSI B16.18/ANSI B2.4 ¾ 11.5 NHR
WALL THICKNESS	KITZ
CONFORMS TO MSS-SP 110	

PRESSURE/TEMPERATURE
150 PSI - SATURATED STEAM TO 366ºF
600 PSI - NON-SHOCK COLD WATER, OIL OR GAS

NOTE: PRESSURE/TEMPERATURE CHART - PAGE BV-29

MATERIAL LIST

NO.	NAME OF PART	SPECIFICATION
1	BODY	FORGED BRASS (B283, C37700)
2	BODY CAP	BRASS ROD (B16)
	(¾″)	FORGED BRASS (B283, C37700)
3	STEM	(1) SPECIAL BRASS (KITZ, "K-METAL")
4	BALL	(2) FORGED BRASS (B283, C37700)
7	GLAND	BRASS ROD (B16)
8	GLAND PACKING	PTFE
9	HANDLE	(3) CARBON STEEL
10	HANDLE NUT	CARBON STEEL
16	SPRING WASHER	CARBON STEEL
19	GASKET	NBR
30	BALL SEATS	PTFE
86	CAP & CHAIN	PP/BRASS

NOTES:
(1) PROPRIETARY DEZINCIFICATION RESISTANT MATERIAL.
(2) CR. PLATING
(3) ELECTROPLATED ZINC WITH PLASTIC COVERING

DIMENSIONS - WEIGHTS - QUANTITIES

d2 SIZE	d	H	D1	L	L1	d1 Max. Min	APPROX. NET WT.	CARTON QTY
½	.59	1.65	3.23	2.93	2.46	.631 .627	52	96
¾	.79	2.01	3.94	3.30	2.79	.881 .877	50	60

SPECIFICATION

Approved valve shall have two piece forged brass body, chrome plated ball, blowout proof stem, PTFE seats/seals, PP or brass cap & chain and full port design. Valves shall be pressure rated to 150 WSP/600 WOG and conform to MSS-SP 110.

KITZ Code No. 68C (AKTAFC) Threaded Ends
69C (CTAFC) Solder Ends

SECTION 23 05 22 2.4 RADIATOR GLOBE VALVES

Dahl Brass Radiator Valves
Heavy Pattern - Straight

TDS-1004
Rev July/10
Replaces: TDS-3

For Steam, Forced Heating or Cooling Systems

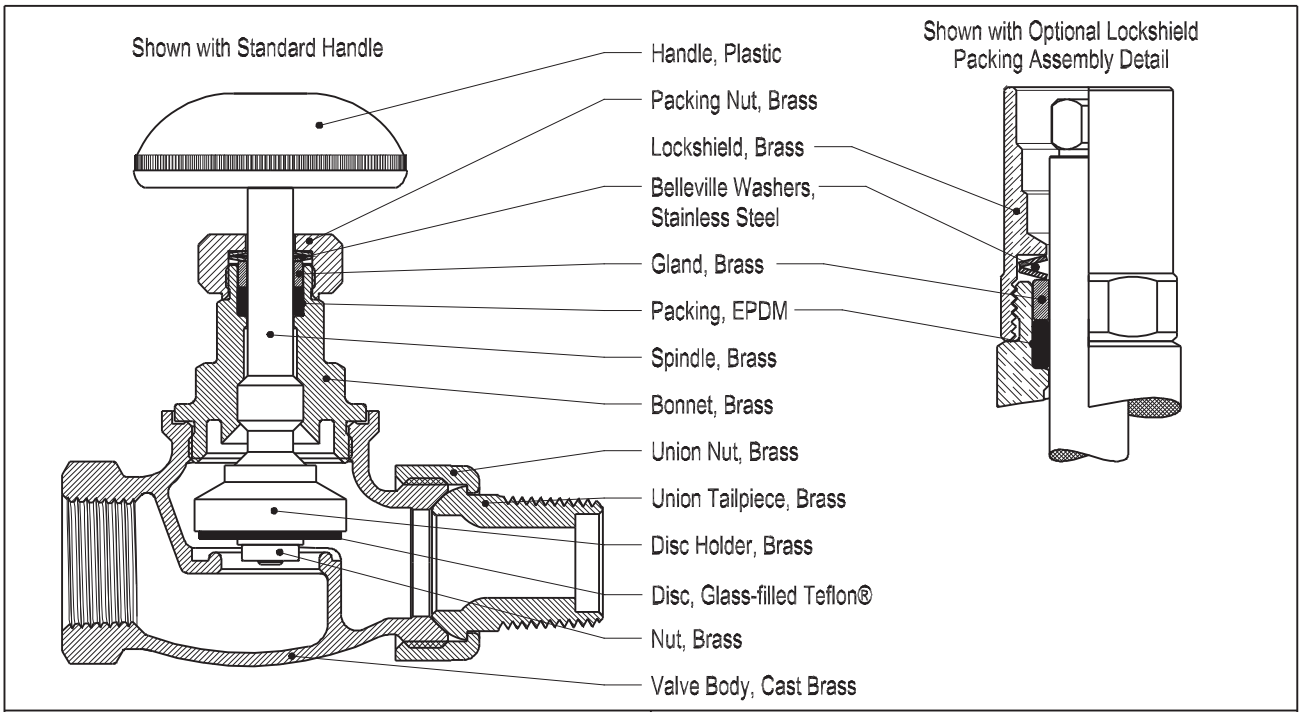

- Self-adjusting, spring loaded packing system
- Low friction packing
- Working pressure/temperature: 250 psi / 250°F
- Designed and manufactured in Canada
- Swivel-type disc holder minimizes wear
- Replaceable disc
- Glass-filled Teflon® disc is good for low pressure steam applications (150 WSP / 300 W), standard on all heavy pattern valves

With Standard Handle

	Size (Inlet x Outlet)	Part Number	C_V (USGPM)	H_{Handle}	L
11042	1/2F x 1/2 Dual Union	110424112	4.7	3-3/4"	3-3/4"
	3/4F x 1/2 Dual Union	110426121	TBA	3-3/4"	4-1/8"
	3/4F x 3/4M Union	110426113	8.2	3-3/4"	4-1/8"
	1 F x 1 M Union	110428114	13.0	4-5/8"	5-1/4"
	1-1/4F x 1-1/4M Union	110429115	21.1	4-3/4"	5-3/4"

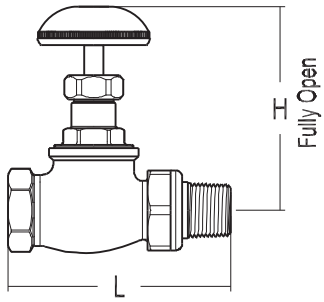

With Tamper Resistant Lockshield

	Size (Inlet x Outlet)	Part Number	C_V (USGPM)	$H_{Lockshield}$	L
11042-LS	1/2F x 1/2 Dual Union	1104241124	4.7	3-1/4"	3-3/4"
	3/4F x 1/2 Dual Union	1104261214	TBA	3-1/4"	4-1/8"
	3/4F x 3/4M Union	1104261134	8.2	3-1/4"	4-1/8"
	1 F x 1 M Union	1104281144	13.0	4-1/8"	5-1/4"
	1-1/4F x 1-1/4M Union	1104291154	21.1	4-1/4"	5-3/4"

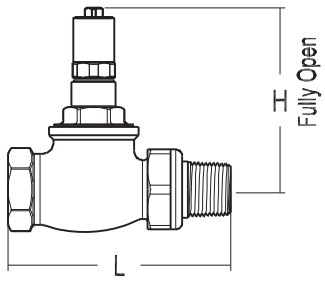

dahl brothers canada limited
2600 S. SHERIDAN WAY, MISSISSAUGA, ON, CANADA L5J 2M4
905-822-2330 CAN 800-268-5355 U.S. 800-268-2363
FAX(905) 855-1450, USA AND CANADA 800-226-1801
www.sales@dahlvalve.com www.dahlvalve.com

We reserve the right to alter prices and/or technical details without notice

Globe Stops

Partition Stops

ELIMINATES THE NEED FOR ACCESS BOXES



#2310-442008





#2330-442008



#9921 Partition Plate

No need to flush cut the tube, the extra deep stainless steel partition plate covers the protruding portion. No tube removal and no marking of the finished wall when cutting tube!

See **Repair Parts and Accessories** for Keys and Plates.

MINIMUM ROUGHING-IN DIMENSIONS	
VALVE SIZE	MIN "M"
1/2"	2-7/8"
3/4"	3-1/8"
Same for angle & straight patterns	

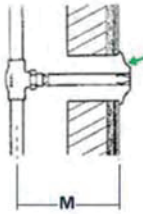

#9921
Partition Plate
Sold Separately

Allow minimum 3" between hot and cold as partition plate has a diameter of 2-1/2"



Pattern	Finish	Description	Part Number
STR	RB	E2310-K 1/2 C x 1/2 C Less Plate	E2310-442008
STR	RB	E2310-K 3/4 C x 3/4 C Less Plate	E2310-662008
ANG	RB	E2330-K 1/2 C x 1/2 C Less Plate	E2330-442008
ANG	RB	E2330-K 3/4 C x 3/4 C Less Plate	E2330-662008

Piggy-Back™ Drain Valves



Pattern	Finish	Description	Part Number
STR	RB	E21616 1/2 C x 1/2 C x Hose L/Cap & Chain	E21616-4
STR	RB	E21616 3/4 C x 3/4 C x Hose L/Cap & Chain	E21616-6
STR	RB	E21616 1/2 C x 1/2 C x Hose W/Cap & Chain	E21616-40000
STR	RB	E21616 3/4 C x 3/4 C x Hose W/Cap & Chain	E21616-60000

Sediment Faucets



Pattern	Finish	Description	Part Number
ANG	RB	E2316 1/2 Dual (C or M) Inlet	E2316-40
ANG	RB	E2316 3/4M Inlet	E2316-61
ANG	RB	E2316 3/4 C Inlet *	E2316-65

Figure # 211

Bronze Threaded Globe Valve

TAG: SECTION 23 05 22 2.5 GLOBE VALVE NPT

Product Features

NOTE RED-WHITE = TOYO

- 125# WSP / 200# WOG
- Bronze Body
- Threaded Ends
- Inserted Bonnet
- Swivel Type Disc
- MSS-SP-80

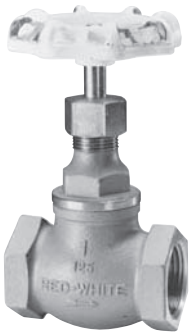

Materials & Specifications

Item	Description	Material	Specification
1	Body	Cast Bronze	B62-C83600
2	Bonnet	1/2" - 4" Bronze	B62-C83600
2	Bonnet	1/4" & 3/8" Brass	B283-C37700
3	Stem	Brass	DR Alloy
4	Disc	2" - 4" Bronze	B62-C83600
4	Disc	1/4" - 1-1/2" Brass	DR Alloy
5	Lock Nut	Brass	B16-C36000
6	Packing Nut	Brass	B283-C37700
7	Gland	Brass	B124-C37700
8	Gland Packing	Plastic/Graphite	T#2996NA
9	Handwheel	3/4" - 4" Alum. Alloy	B85-SC114A
9	Handwheel	1/4" - 1/2" Zinc Alloy	B86-AG40A
10	Wheel Nut	Zinc Plated	A36
11	Name Plate	Aluminum	B209-1100

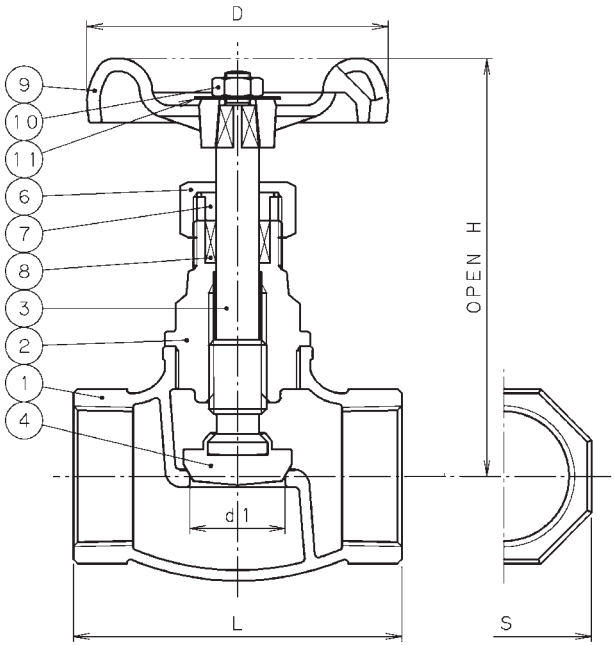

Dimensions & Weights (inches-lbs.)

Size	1/4	3/8	1/2	3/4	1	1-1/4	1-1/2	2	2-1/2	3
D	1.89	2.17	2.17	2.48	2.76	3.15	3.54	3.94	4.92	5.51
d1	.39	.47	.59	.79	.98	1.26	1.58	1.97	2.56	3.15
H	2.64	2.91	3.03	3.5	4.33	5.16	5.67	6.5	8.09	8.74
L	1.65	1.81	2.17	2.56	2.99	3.35	3.86	4.53	5.59	6.5
S	.79	.95	1.1	1.38	1.61	1.97	2.24	2.76	3.47	4.09
Cv	1.1	2	3.5	6.5	12	21	30	49	81	126
Wt.- lbs.	.40	.49	.64	.95	1.48	2.27	3.18	5.05	9.04	14.11

Sizes 2" & 2-1/2"

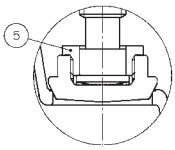

Sizes 3" & 4"

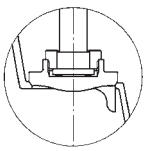

RED-WHITE VALVE CORP. 20600 Regency Lane • Lake Forest, CA 92630
tel: 949.859.1010 • fax: 949.859.7200 • www.redwhitevalvecorp.com

TAG: SECTION 23 05 22 2.6 STRAINERS

RWV®

ECO-VALVE

Figure # 380AB

Low Lead Brass Threaded Y-strainer

NOTE: RED-WHITE = TOYO

Product Features

- 125# WSP / 200# WOG
- Low Lead Brass Body
- Threaded Ends
- Stainless Steel Mesh Screen
- Threaded Cap with Clean Out Plug

* NSF 61-G & NSF 372 Certified

Certified to ANSI/NSF 61

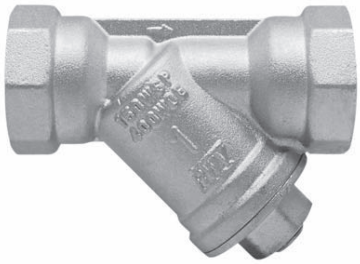

Materials & Specifications

Item	Description	Material	Specification
1	Body	Low Lead Brass	UNS C28500
2	Strainer	Stainless Steel	SS 304
3	Gasket	PTFE	PTFE
4	Cap	Low Lead Brass	UNS C28500
5	Plug	Low Lead Brass	UNS C28500

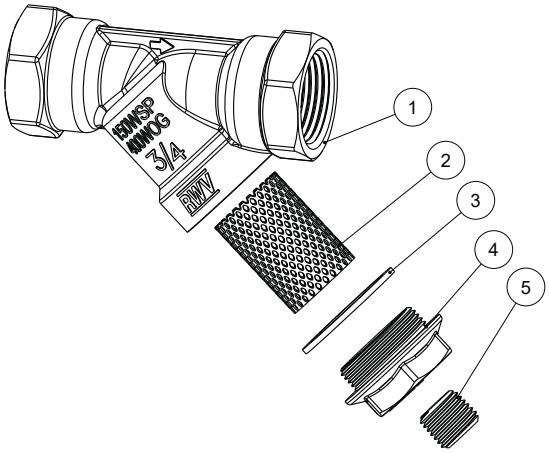

Dimensions, Weights (inches-lbs.) & Valve Data

Size	1/2	3/4	1	1-1/4	1-1/2	2
A	2.76	3.23	3.64	4.11	4.69	5.28
H	2.13	2.36	2.64	3.50	4.13	4.74
P	0.59	0.67	0.79	1.26	1.57	1.97
C	0.61	0.75	0.75	0.77	0.77	0.83
Wt	0.46	0.65	0.95	1.30	1.98	2.69

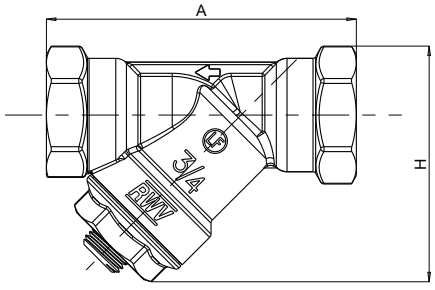

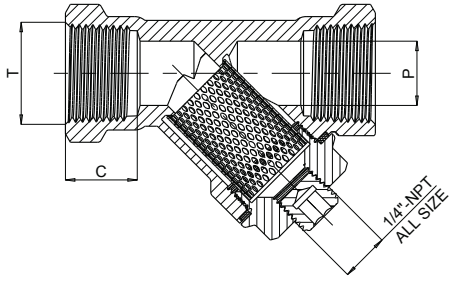

RED-WHITE VALVE CORP.
20600 Regency Lane, Lake Forest, CA 92630
TEL: 949.859.1010 • FAX: 949.859.7200 • www.redwhitevalvecorp.com

Feature

TAG: SECTION 23 05 22 2.6 STRAINERS

125# WSP
200# WOG
Iron body
Flanged ends per ANSI B16.5
SS304 perforated screen
Bolted cap with clean out plug
20 MESH wire screen option available
(Wire screen is supported by perforated screen)



Material

	Part	Material	Specification
1	Body	Cast Iron / Ductile Iron[1]	A126-B / A536[1]
2	Screen	Stainless Steel	SS304
3	Bonnet	Cast Iron / Ductile Iron[1]	A126-B / A536[1]
4	Plug	Steel	-
5	Cap Bolt	Steel	-
6	Gasket	EPDM	-

[1] Ductile iron A536 for 8" and above

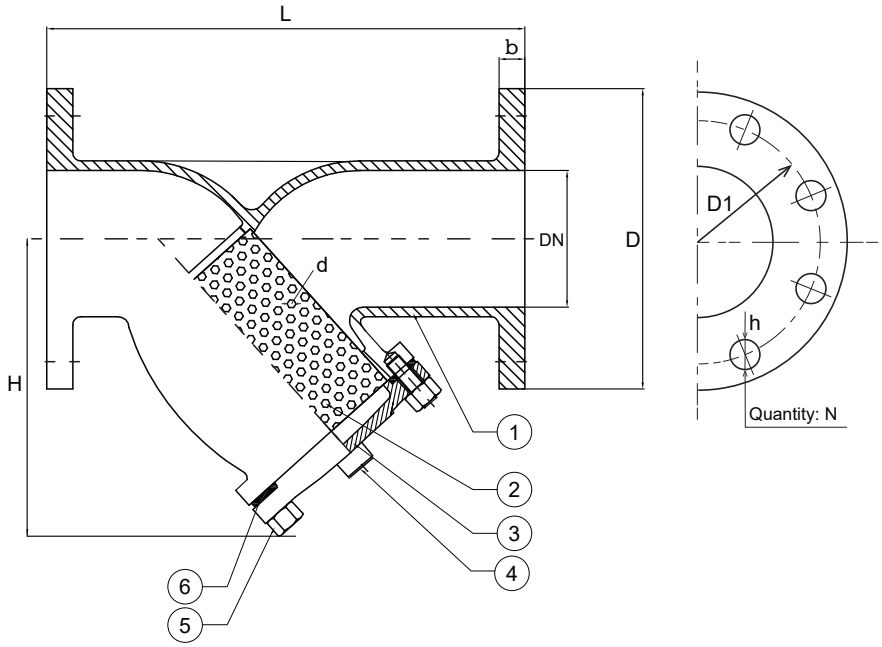

Dimension, Weight

Size DN	D [in]	D1 [in]	H [in]	L [in]	b [in]	d [in]	N - h [in]	Clean out [in]	Cv	Wt. [lb]
2"	5.98	4.76	4.92	8.86	0.71	0.079	4 - 0.75	1	52	19.8
2½"	7.01	5.51	5.91	10.75	0.71	0.079	4 - 0.75	1	80	23.4
3"	7.52	5.98	6.89	11.50	0.79	0.079	4 - 0.75	1	116	32.4
→ 4"	9.02	3.58	7.68	13.86	0.79	0.079	8 - 0.75	1¼	205	46.2
5"	10.00	8.50	9.25	16.54	0.87	0.118	8 - 0.88	1¼	325	65.0
6	10.98	9.49	10.83	18.50	0.94	0.118	8 - 0.88	1½	465	91.8
8"	13.50	11.77	13.78	21.38	0.94	0.197	8 - 0.88	1½	845	131
10"	15.98	14.25	16.54	25.98	1.02	0.197	12 - 1.00	1½	1350	205
12"	19.02	17.01	19.29	30.00	1.02	0.197	12 - 1.00	1½	2080	269

Drawings, photos and data are provided for information only and subject to change without notice. No part of this document may be reproduced, copied, modified or adapted, without the prior written consent of the copyright owner, unless otherwise indicated.
© 2018 Red-White Valve Corp. All Rights Reserved

Balancing Valves
TA Series 786/787/788/789 and Series 78K

08.16



Product Description:

Tour & Andersson calibrated balancing valves offer a reliable, simple and cost effective way to measure and balance all flow rates. Full throttling range is achieved by 4, 8, 12, 16, 20 or 22 full turns of the handwheel, enabling a precise setting. This high degree of accurate adjustment means that the system can be balanced precisely.

The actual pressure drops in heating and cooling systems are difficult to establish by calculation because water flows vary from design flows. They can be corrected easily by regulating the desired water flow with Tour & Andersson globe style balancing valves. By measuring the pressure drop across measuring ports at a particular handwheel setting, the water flow for the valve size can be read easily from the appropriate pressure drop graph or flow balancing wheel. If the flow does not conform with that specified, adjust the valve and repeat the measuring procedure until the correct flow has been obtained.

NOTE: All Tour & Andersson balancing valves include a concealed memory feature with a locking tamper-proof setting.

Series 78K and TA Series 786 and 787 valves have an Ametal® body.

TA Series 788 and 789 balancing valves have ductile iron bodies and Ametal or ductile iron trim, depending on size. Test ports feature self-sealing construction for insertion-type pressure or temperature probes.

All valves are rated from –4°F/–20°C to +250°F/+120°C. Service will also be governed by the connecting coupling gasket ratings for grooved and flanged valves.

Insulation kits are available for ½ – 6"/15 – 150 mm sizes for Series 78K and TA Series 786, 787, 788 and 789 balancing valves.

Job/Owner

System No.	
Location	

Contractor

Submitted By	
Date	

Engineer

Spec Section	
Paragraph	
Approved	
Date	

08.16 0930 Rev Q Updated 05/2014 © 2014 Victaulic Company. All rights reserved.

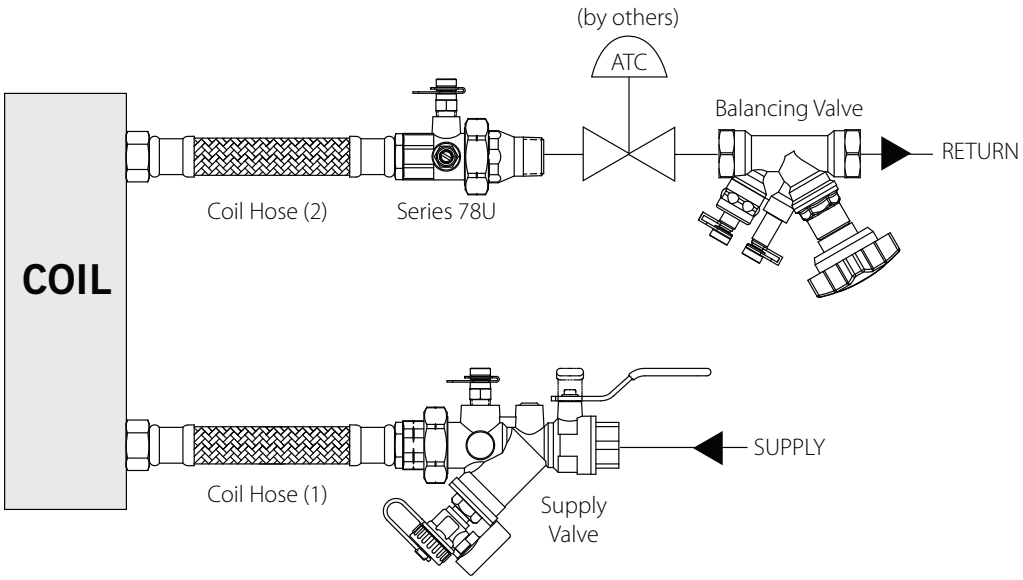

Victaulic Series 799/79V KOIL-KIT™ Coil Pack
Note: TA Series 787 shown, other options available.

Balancing valves can be ordered individually or as a component of the Series 799, 79V, 79B, or 79A KOIL-KIT Coil Pack. See the Series 799/79V/79B/79A Contractor Order Form (A) (publication SF-33) for help ordering your Victaulic KOILKIT Coil Pack.

Victaulic KOIL-KIT Coil Packs provide a simplified, quality coil installation while ensuring optimal hydronic systems design requirements are met. The Series 799/79V is suitable for a variety of hot and cold water applications including treated and untreated water systems.

The Victaulic KOIL-KIT Coil Pack consists of the following components: Series 78Y Y-Strainer/Ball Valve or Series 78T Ball Valve Union Combination, two Coil Hoses, a Series 78U Union Port Fitting and a TA balancing valve. There are two options when ordering a Victaulic KOIL-KIT Coil Pack: Series 799 KOIL-KIT Coil Pack or Series 79V KOIL-KIT Coil Pack with ATC Valve.

The Series 799 and Series 79V comes standard with the components listed above. Additionally, the Series 79V includes the option to have the ATC valve of your choosing assembled and shipped with the Victaulic KOIL-KIT Coil Pack. Please note that when ordering a Series 79V, Victaulic offers one balancing valve, the Series 78K. Specify either Series 799 or Series 79V when ordering.

The Series 79B and Series 79A come standard with the components listed above, however these two packages also include the Bypass Option. When choosing a Victaulic KOIL-KIT Coil Pack with a Bypass Option, the following components are available as options: Series 78Y with Bypass Tee or Series 78T with Bypass Tee, a third coil hose, and a bypass valve. (Bypass valve options consist of Series 78Y, 78T, 78K, 786, 787).

The Series 79A includes the Bypass Option and the option to have the ATC valve of your choosing assembled and shipped with the Victaulic KOIL-KIT Coil Pack.

For added convenience, when coil hoses are ordered as a component of the Series 799 or 79V KOIL-KIT Coil Pack, all hoses can be provided pre-connected to the Series 78Y or 78T on the supply side and the Series 78U on the return side (specify connection preference when ordering).

For information on Victaulic KOIL-KIT Coil Packs in ½ – 2"/15 – 50 mm sizes, refer to publication 08.30.

For information on Victaulic KOIL-KITS for air handling units in 2 ½ – 6"/65 – 150 mm sizes, refer to publication 08.35.

 © 2014 Victaulic Company. All rights reserved.

Material Specifications:

Balancing Valves

Body:

Series 78K and TA Series 786, 787: Ametal, (pressure die cast, nonporous copper alloy)

TA Series 788, 789: Ductile iron, ASTM A536 Grade 60-40-18 (BS Grade 400/15)

Body coating:

TA Series 788, 789: 2 ½, 3, 4" – Epoxy resin coated

5 – 16" – painted

Trim: (Bonnet, Stem and Restriction Cone)

Series 78K and TA Series 786, 787: Ametal

TA Series 788, 789:

Bonnet – 2 ½ – 6" – Ametal

Bonnet – 8 – 16" – Ductile Iron

Stem: Ametal

Restriction Cone: Ametal

Union:

Series 78K: Brass with EPDM o-ring

Tailpiece & adapter:

Series 78K: DZR Brass

Seat:

Series 78K, and TA Series 786, 787: Ametal

TA Series 788, 789: Ductile Iron

Seat seal:

Series 78K and TA Series, 786, 787, 788, 789: EPDM

Stem seals:

EPDM

Probe seals:

EPDM

Handwheel:

Series 78K and TA Series 786, 787 – Red Polyamide plastic

TA Series 788, 789: 2 ½ – 6" – Red Polyamide plastic

8 – 16" – Aluminum

Optional Equipment:

☐ TA Series 786, 787: Drain kit-Ametal

☐ TA Series 786, 787: Insulation Kit-Polyurethane.

Also available on TA Series 789 2 ½ – 6" sizes.

Allen wrench sizes:

3 mm memory ½ – 2" TA Series 786, 788 valves

5 mm memory 2 ½ – 12" TA Series 788 & 2 ½ – 6" TA Series 789 valves

8 mm memory 8 – 16" TA Series 789 valves

5 mm drain kit ½ – 2" TA Series 786 valves

 © 2014 Victaulic Company. All rights reserved.

Comparison of balancing valve throttling characteristics

This curve illustrates the advantage of the four (4) turn adjustment available with Tour & Andersson balancing valves (½ – 2"/15 – 50 mm). Valves 2 ½"/65 mm) and larger have 8, 12 or 16 turns.

A 90° fully open to closed valve requires just a 12° change in adjustment to equal 30% change of the flow.

Tour & Andersson balancing valves would require a 408° change in adjustment to equal the same 30% change in the flow.

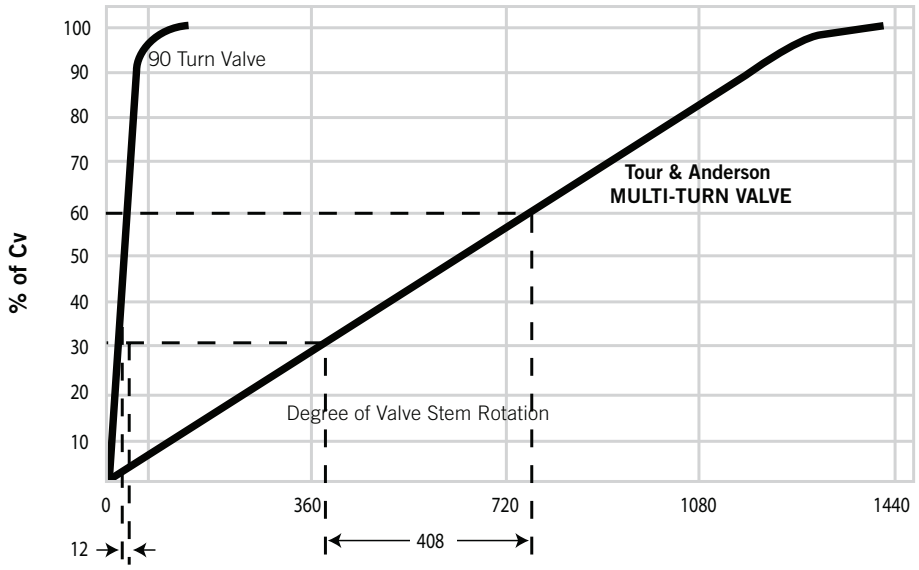

 © 2014 Victaulic Company. All rights reserved.

Dimensions:

Balancing Valve

TA Series 786 Solder End

TA Series 787 Female Threaded End

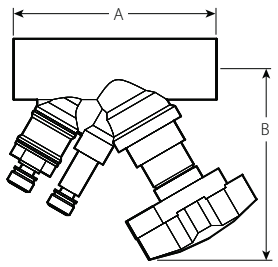

TA Series 786
½–2"/15–50 mm sizes

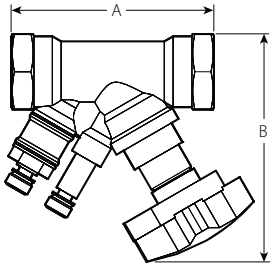

TA Series 787
½–2"/15–50 mm sizes

Size		TA Series 786 Solder End (300 psi/2065 kPa) Balancing Valve			TA Series 787 NPT (Female) Threaded End (300 psi/2065 kPa) Balancing Valve		
Nominal Size inches mm	**Actual Outside Diameter** inches mm	**A End to End** inches mm	**B Center to Top** inches mm	**Approx. Weight Each** Lbs. kg	**A End to End** inches mm	**B Center to Top** inches mm	**Approx. Weight Each** Lbs. kg
½ 15	0.840 21.3	3.50 89	4.00 102	1.4 0.6	3.50 89	4.00 102	1.5 0.7
¾ 20	1.050 26.7	3.81 97	4.00 102	1.4 0.6	3.81 97	4.00 102	1.6 0.7
1 25	1.315 33.7	4.31 110	4.50 114	1.9 0.9	4.31 110	4.50 114	2.0 0.9
1 ¼ 32	1.660 42.4	4.88 124	4.31 110	2.4 1.1	4.88 124	4.31 110	2.6 1.2
1 ½ 40	1.900 48.3	5.13 130	4.75 121	3.1 1.4	5.13 130	4.75 121	3.3 1.5
2 50	2.375 60.3	6.13 156	4.75 121	4.5 2.0	6.13 156	4.75 121	5.0 2.3

 © 2014 Victaulic Company. All rights reserved.

Valve Selection Guide:

Size		Flow Data for TA Series 786 / 787 / 78K		
Nominal Size inches mm	**Actual Outside Diameter** inches mm	**Absolute Min. Flow** GPM LPM	**Nominal Range of Flow** GPM LPM	**Absolute Max. Flow** GPM LPM
½ 15	0.840 21.3	0.1 0.5	0.6 – 2.8 2.3 – 10.6	8.6 32.6
¾ 20	1.050 26.7	0.4 1.5	2.0 – 6.0 7.6 – 22.7	20.0 76.0
1 25	1.315 33.7	0.5 1.7	3.9 – 10.0 14.8 – 37.9	30.0 114.0
1 ¼ 32	1.660 42.4	0.9 3.3	5.0 – 15.0 18.9 – 56.8	48.0 182.0
1 ½ 40	1.900 48.3	1.3 4.9	6.6 – 20.0 25.0 – 75.7	66.0 250.0
2 50	2.375 60.3	2.0 7.6	12.6 – 36.0 47.7 – 136.0	110.0 416.0

Important Notes:

Balancing valves should be sized in accordance with the GPM/LPM flows (and not in relation to pipeline size). Sizing balancing valves based on the minimum or maximum flow rates is not recommended. Valves should be sized using the nominal flow rate only. The Minimum Flow is calculated from the minimum open setting of the valve and a minimum pressure drop 1 Ft. WG (= 3 kPa). The Nominal Flow is calculated from the maximum open setting of the valve and the minimum recommended pressure drop, 2 Ft. WG (= 6 kPa). The Maximum Flow is calculated from the maximum open setting of the valve and the maximum pressure drop, 20 Ft. WG (= 60 kPa). A computer program, TA-Select, is available for calculation of valve handwheel pre-set position and other applications.

Note: For information regarding Allen Wrench sizes see the Material Specifications section on page 3..

Measuring Accuracy:

The hand wheel zero position is calibrated and must not be changed. Valves have an accuracy of flow measurement of 2% to 3% when used within their recommended flow range and installed in accordance with the figure below.

Note: For the most accurate results, a Series 734 TA SCOPE or Series 73M CMI should be used. However, any differential pressure meter may be used.

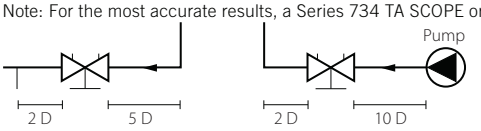

The illustration relates to the accuracy of differential pressure measurement and is not an installation requirement.

 © 2014 Victaulic Company. All rights reserved.

C_V Values for various handle settings

Series 78K and TA Series 786/787

The values below or the graph on page 16 may be used when calculating and sizing a piping system.

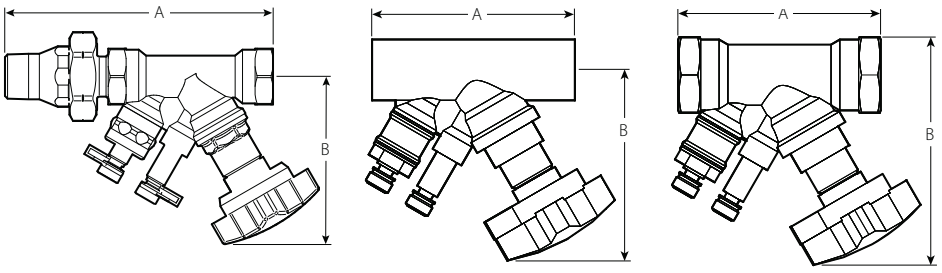

Series 78K TA Series 786 TA Series 787

Style	C_V Values for Sizes listed below [1]					
No. of Turns	½"	¾"	1"	1 ¼"	1 ½"	2"
0.50	0.15	0.59	0.70	1.32	2.03	2.97
1.00	0.25	0.88	1.19	2.20	3.83	4.87
1.50	0.36	1.38	2.44	3.60	5.34	8.35
2.00	0.66	2.20	4.20	5.40	7.08	13.60
2.50	1.02	3.24	6.15	8.24	10.20	18.80
3.00	1.60	4.49	8.00	11.00	14.60	24.90
3.50	2.30	5.51	9.28	13.70	18.60	30.70
4.00 [2]	2.92	6.61	10.09	16.50	22.30	38.00

1 C_v = GPM at a ΔP of 1 psi/7 kPa) through the valve at any given setting.

1 psi = 2.31 ft. of H_2O

2 Full open valve.

 © 2014 Victaulic Company. All rights reserved.

Balancing Valve

Series 78K Male and Female

Optional tailpieces are available for double reductions, or for changing end configurations from sweat to threaded or threaded to sweat. If needed, specify tailpiece option when ordering.

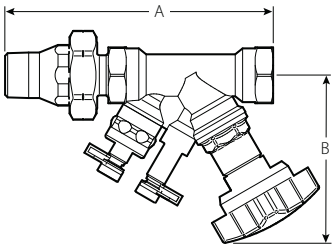

Series 78K
Typical ½–2"/15–50 mm sizes

Nominal Size inches mm			Series 78K Male x Female (300 psi/ 2065 kPa) Balancing Valve		
			A End to End inches mm	B Center to End inches mm	Approx. Weight Each Lbs. kg
MPT Union		FPT Valve			
½ 15	x	½ 15	5.75 146	4.00 102	1.7 0.8
	x	¾ 20	5.94 151	4.00 102	1.8 0.8
	x	1 25	6.27 159	4.50 114	2.7 1.2
	x	1 ¼ 32	7.37 187	4.72 120	4.1 1.9
¾ 20	x	¾ 20	5.99 152	4.00 102	2.3 1
	x	1 25	6.81 173	4.50 114	2.2 1.0
	x	1 ½ 40	7.66 195	4.75 121	5.0 2.3
1 25	x	1 25	7.70 186	5.30 135	4.02 1.8
	x	1 ¼ 32	7.83 199	4.31 109	2.8 1.3
	x	1 ½ 40	7.66 195	4.75 121	5.2 2.4
	x	2 50	8.91 226	4.75 121	7.3 3.3
1 ¼ 32	x	1 ¼ 32	8.18 208	4.72 120	5.52 2.5
	x	1 ½ 40	8.21 209	4.75 121	3.6 1.6
	x	2 50	8.91 226	4.75 121	7.5 3.4
1 ½ 40	x	1 ½ 40	9.00 229	4.75 121	7.16 3.2
	x	2 50	9.02 229	4.75 121	5.3 2.4
2 50	x	2 50	8.86 2.25	4.75 121	7.19 3.3

 © 2014 Victaulic Company. All rights reserved.

Balancing Valve

TA Series 788 Flanged End
(Class 150 RF, ASME/ANSI B16.42)

TA Series 789 Grooved End

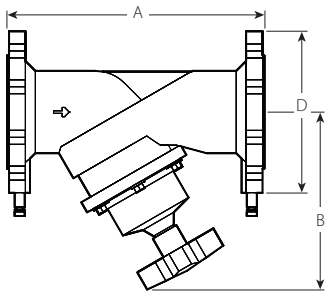

TA Series 788
Typical 2½–16"/65–400 mm sizes

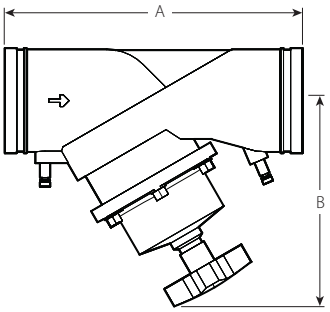

TA Series 789
Typical 2½–12"/65–300 mm sizes

Size		TA Series 788 Flanged End (250 psi/1720 kPa) Balancing Valve			TA Series 789 Grooved End (350 psi/2400 kPa) Balancing Valve		
Nominal Size inches mm	**Actual Outside Diameter** inches mm	**A** **End to End** inches mm	**B** **Center to Top** inches mm	**Approx. Weight Each** Lbs. kg	**A** **End to End** inches mm	**B** **Center to Top** inches mm	**Approx. Weight Each** Lbs. kg
2½ 65	2.875 73.0	11.38 289	8.00 203	24.0 10.9	11.38 289	8.00 203	14.0 6.4
3 80	3.500 88.9	12.25 311	8.63 219	31.0 14.1	12.25 311	8.63 219	20.0 9.1
4 100	4.500 114.3	13.75 350	9.44 240	43.0 19.6	13.75 350	9.44 240	31.0 14.1
5 125	5.563 141.3	15.75 400	10.88 276	62.0 28.5	15.75 400	10.88 276	50.0 22.7
6 150	6.625 168.3	18.88 480	11.25 286	82.0 37.5	18.88 480	11.25 286	69.0 31.3
8 200	8.625 219.1	23.63 600	17.00 432	168.0 76.5	23.63 600	17.00 432	140.0 63.7
10 250	10.750 273.0	28.75 730	17.75 451	270.0 122.9	28.75 730	17.75 451	202.0 91.9
12 300	12.750 323.9	33.50 851	19.00 483	360.0 163.9	33.50 851	19.00 483	280.0 127.4
14 350	14.00 355.6	38.60 980	23.00 584	655 297	–	–	–
16 400	16.00 406.4	43.30 1100	25.20 640	895 406	–	–	–

 © 2014 Victaulic Company. All rights reserved.

Balancing Valve

TA Series 788 Flanged End
(Class 150 RF, ASME/ANSI B16.42)

TA Series 789 Grooved End

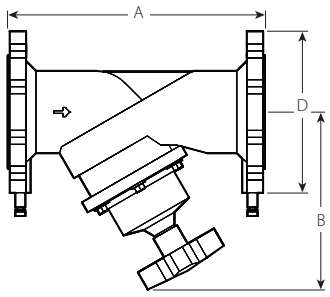

TA Series 788
Typical 2½–16"/65–400 mm sizes

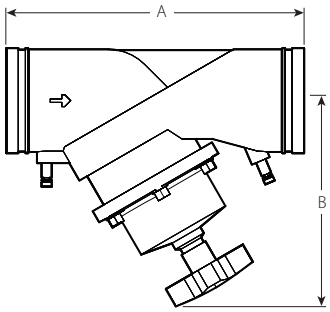

TA Series 789
Typical 2½–12"/65–300 mm sizes

Valve Selection Guide:

Size		Flow Data for TA Series 788 & 789		
Nominal Size inches mm	**Actual Outside Diameter** inches mm	**Absolute Min. Flow** GPM LPM	**Nominal Range of Flow** GPM LPM	**Absolute Max. Flow** GPM LPM
2½ 65	2.875 73.0	1.4 5.3	38.0 – 100.0 144.0 – 379.0	290.0 1097.7
3 80	3.500 88.9	1.5 5.7	31.0 – 130.0 117.0 – 493.0	410.0 1551.9
4 100	4.500 114.3	1.9 7.2	68.0 – 200.0 257.0 – 757.0	650.0 2460.3
5 125	5.563 141.3	4.2 15.9	90.0 – 320.0 341.0 – 1211.0	1020.0 3860.7
6 150	6.625 168.3	5.0 18.9	182.0 – 450.0 689.0 – 1703.0	1430.0 5412.6
8 200	8.625 219.1	30.0 113.6	367.0 – 820.0 1389.0 – 3104.0	2600.0 9841.0
10 250	10.750 273.0	70.0 265.0	540.0 – 1300.0 2044.0 – 4921.0	4040.0 15291.4
12 300	12.750 323.9	115.0 435.3	960.0 – 1500.0 3634.0 – 5678.0	4950.0 18735.8
14 [3] 350	14.00 355.6	83.0 314.0	1020.0 – 2700.0 3861.0 – 10220.0	7414.0 28062.0
16 [3] 400	16.00 406.4	95.0 360.0	1330.0 – 3400.0 5034.0 – 12869.0	9371.0 35469.0

3 Only the TA Series 788 Flanged End Balancing Valves is available in 14-16" / 350-400mm sizes

Important Notes (See page 5 for Balancing Accuracy):

Balancing valves should be sized in accordance with the GPM/LPM flows (and not in relation to pipeline size). Sizing balancing valves based on the minimum or maximum flow rates is not recommended. Valves should be sized using the nominal flow rate only. The Minimum Flow is calculated from the minimum open setting of the valve and a minimum pressure drop 1 Ft. WG (= 3 kPa). The Nominal Flow is calculated from the maximum open setting of the valve and the minimum recommended pressure drop, 2 Ft. WG (= 6 kPa). The Maximum Flow is calculated from the maximum open setting of the valve and the maximum pressure drop, 20 Ft. WG (= 60 kPa).A computer program, TA-Select, is available for calculation of valve handwheel pre-set position and other applications.

Note: For information regarding Allen Wrench sizes see the Material Specifications section on page 3.

Note: For the most accurate results, a Series 734 TA SCOPE or Series 73M CMI should be used. However, any differential pressure meter may be used.

 © 2014 Victaulic Company. All rights reserved.



Link Differential Pressure Sensor

TA Series 736

Provides connection between a building's heating and cooling and building's monitoring system (BMS).

Continuously measures the flow and differential pressure through and across the Tour & Andersson balancing valves.

Measurement probes provided for direct connection to the measurement points on all TA Series 786, 787, 788, and 789 balancing valves.



TA Select Computer Program

TA Select helps you choose the right balancing valve, taking the desired flow rate and pressure drop into consideration. The software will advise the correct combination of valve, handwheel position and pipe size to correctly balance the system. A sophisticated viscosity correction procedure displays the density, viscosity, specific heat and freezing point of fluids such as glycols and brines. It also displays the true value of flow through each valve.

The program will also size the pipe, generate Cv values for the ATC valves and give pre-set information for all TA valves on the project.



TA SCOPE

TA Series 734

The TA Series 734 SCOPE is a wireless, handheld device for the swift and accurate measurement of differential pressure, flow, temperature and power.

An independent sensor communicates with the TA SCOPE to deliver data quickly, thereby enabling contractors to balance a system, troubleshoot hydronic problems and log system performance.

The TA Series 734 SCOPE Premium is a more robust case compared to the TA Series 734 SCOPE. See page 12 of this publication for additional details on the TA SCOPE and TA SCOPE Premium.

Differential pressure:
- TA SCOPE: 0-29 psi / 0-200 kPa
- TA SCOPE (High Pressure): 0-145 psi / 0-1000 kPa

 © 2014 Victaulic Company. All rights reserved.

TA Series 734 SCOPE Premium / SCOPE

TA SCOPE Premium case is a robust partitioned case that includes:

- Combined safety pressure and temperature probe allowing automatic correction for fluid temperatures and easier power measurements
- A large set of accessories
- Extra space for a second (optional) differential pressure sensor and tools.

The TA SCOPE contains a reduced set of accessories compared to the TA SCOPE Premium. All * marked parts are included in both the TA SCOPE Premium and TA SCOPE kits.





1. *Handheld unit (Hh)
2. *Dp Sensor unit (DpS)
3. *Digital Temperature Sensor (DTS)
4. *Measuring hoses, 20 in. red/blue
5. Safety pressure and temperature probe (SPTP)
6. Safety pressure probes (SPP)
7. Measuring hoses with twin needle, 5.9 in
8. Flashlight
9. Mirror
10. Chucks for older valves, red/blue
11. *Allen Keys 3mm/5mm
12. Spanner for measuring points on older valves
13. *Presetting tool TA Series TC/TCM/TCP
14. *Spare filters (4 pcs)
15. Chain for mounting
16. Neckstrap
17. *USB-cables for connection: Hh - DpS and Hh - PC
18. *Multi-charger for handheld, Dp sensor(s) and TA-SCOPE Relays
19. *DC cable (2 PCS)
20. *AC cable (EU, UK, US or AU.NZ)
21. Cable wrapping
22. *Case
23. TA-Select Software
24. User manual
25. *Calibration certificates for DpS, DTS, and SPTP
26. *Quick Guide
27. SPTP/SPP instruction
28. SPTP/SPP stickers

NOTE: * Denotes this part is available in the SCOPE as well as the SCOPE Premium.

 © 2014 Victaulic Company. All rights reserved.

Accessories

Drain Kit Series 786-DK

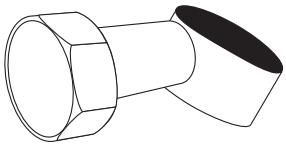

- A separate drain kit with a ¾"/20 mm connection is available for Series 786 and Series 787 valves
- Kit must be field mounted
- Kit comes complete with 2 gaskets and a hexnut.
- Partcode= K-000-786-CBV

Probe Port

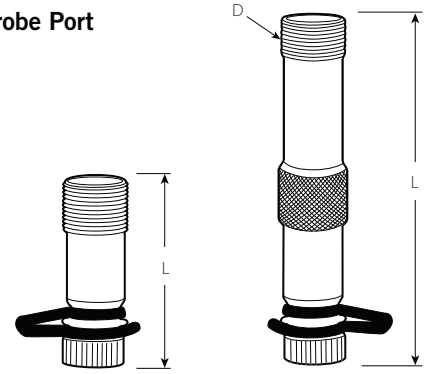

TA Series 786/787/788/789 TA Series 788/789

Style	Size		
	inches mm	Part Code	L inches mm
786/787	½ – 2 15 – 50	K-000-740-003	1.75 45
788/789	2½ – 16 65 – 400	K-000-740-002	1.19 30
788/789	2½ – 16 65 – 400	K-000-740-001	3.50 89

Universal Gauge Meter Conversion Kit

- This kit includes 2 probes, necessary fittings, flow wheel and instruction sheet.
- Partcode= K-000-738-100

Handwheels

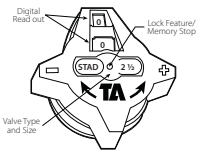

TA Series 786/787
Plastic
½–2"

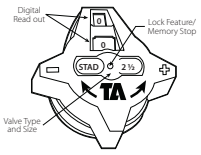

TA Series 788/789
Plastic
2½–6"

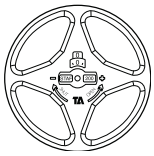

TA Series 788/789
Aluminum
8–16"

Part Code	Part Code	Part Code
P-004-784-001	P-024-784-001	P-080-784-001

Balancing Wheel



By using the balancing wheel it is easy to determine the relationship between flow, pressure drop and the handwheel setting values for all valve sizes. Order the balancing wheel from your nearest Victaulic representative.

 © 2014 Victaulic Company. All rights reserved.

Prefab Insulation

TA Series 786 & TA Series 787

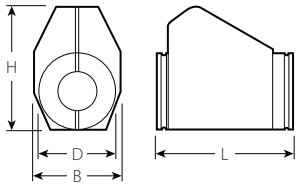

Valve Size inches mm	Part Code	Dimensions Inches/mm			
		H	D	B	L
½ & ¾ 15 & 20	K-004-784-INS	5.31 135	3.54 90	4.06 103	5.51 140
1 25	K-010-784-INS	5.59 142	3.70 94	4.06 103	6.30 160
1 ¼ 32	K-012-784-INS	6.14 156	4.17 106	4.06 103	7.09 180
1 ½ 40	K-014-784-INS	6.65 169	4.25 108	4.45 113	8.43 214
2 50	K-020-784-INS	7.01 178	4.25 108	4.49 114	9.65 245

Prefab Insulation

TA Series 788 & TA Series 789

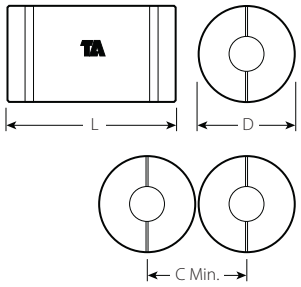

Valve Size inches mm	Part Code	Dimensions Inches/mm		
		H	D	B
2 ½ 65	K-024-784-INS	17.75 451	10.63 270	10.63 270
3 80	K-030-784-INS	19.00 483	11.44 291	11.44 291
4 100	K-040-784-INS	20.50 521	12.63 321	12.63 321
5 125	K-050-784-INS	22.50 572	13.75 349	13.75 349
6 150	K-060-784-INS	26.00 660	15.00 381	15.00 381

 © 2014 Victaulic Company. All rights reserved.

Correction Factors:

For liquids other than water, the flow values from the balancing wheel can be adjusted as follows:

Divide the flow rate (as indicated by the balancing wheel) by the square root of the specific gravity.

$$\text{Actual Flow} = \frac{q_{CBI}}{\sqrt{SG}}$$

This applies to liquids having, on the whole, the same viscosity as water, i.e. most water/glycol mixtures and water/brine solutions at room temperature. At low temperatures, the viscosity increases and laminar flow may occur in certain valves. The risk increases with small valves, low settings and low differential pressures.

A computer program (TA-Select) is available for calculation of pre-setting values and other applications. When the flow setting is verified or changed to the final setting, the memory stop should be set. Contact Victaulic for further information.

Correction Factors:

When Δp and the design flow rate are known, use the formula shown to calculate the C_V value or use the graphs on page 17 – 19. The Tour & Andersson balancing wheel can also be used.

$$C_v = 1.52 \frac{q}{\sqrt{\Delta p}}$$

q in GPM, Δp in Ft. of H_2O

$$C_v = \frac{q}{\sqrt{\Delta p}}$$

q in GPM, Δp in psi

A computer program, TA-Select, is available from Victaulic for calculation of pre-setting values and other applications.

 © 2014 Victaulic Company. All rights reserved.

C_V Values for various handle settings

TA Series 788/789

The values below or the graph on page 17 and 18 may be used when calculating and sizing a piping system.

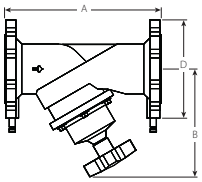

TA Series 788

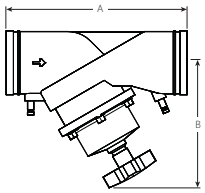

TA Series 789

Style	C_V Values for Sizes listed below [4]									
No. of Turns	2½"	3"	4"	5"	6"	8"	10"	12"	14" [5]	16" [5]
0.50	2.09	2.32	2.90	6.38	7.54	—	—	—	—	—
1.00	3.94	4.64	6.96	12.20	13.90	—	—	—	—	—
1.50	5.68	6.96	10.40	18.00	25.50	—	—	—	—	—
2.00	7.54	9.28	13.30	24.90	46.40	46.40	104.00	—	—	—
2.50	10.80	12.80	18.60	31.30	75.40	58.00	128.00	—	—	—
3.00	18.90	16.20	30.20	41.80	116.00	75.40	162.00	174.00	124.90	143.20
3.50	29.70	22.60	51.00	63.80	157.00	104.00	226.00	267.00	147.80	169.60
4.00	40.90	33.60	73.10	96.30	196.00	139.00	296.00	348.00	169.60	195.50
4.50	51.60	47.60	92.80	132.00	240.00	191.00	371.00	429.00	194.80	238.30
5.00	60.30	63.80	114.00	164.00	281.00	261.00	447.00	522.00	237.10	302.40
5.50	70.20	78.90	133.00	194.00	324.00	331.00	516.00	621.00	291.00	373.50
6.00	78.90	92.80	153.00	229.00	362.00	394.00	580.00	719.00	346.00	442.20
6.50	84.70	107.00	168.00	255.00	394.00	464.00	632.00	800.00	403.30	514.40
7.00	89.30	119.00	184.00	289.00	426.00	505.00	684.00	870.00	462.80	590.00
7.50	93.40	131.00	203.00	320.00	454.00	545.00	766.00	945.00	539.60	675.90
8.00	98.60 [6]	139.00 [6]	220.00 [6]	348.00 [6]	487.00 [6]	597.00	841.00	1032.00	637.00	779.00
9.00	—	—	—	—	—	690.00	951.00	1125.00	898.10	1024.20
10.00	—	—	—	—	—	754.00	1090.00	1206.00	1096.40	1306.00
11.00	—	—	—	—	—	824.00	1218.00	1299.00	1260.20	1432.00
12.00	—	—	—	—	—	887.00 [6]	1375.00 [6]	1392.00	1443.50	1603.90
13.00	—	—	—	—	—	—	—	1531.00	1626.80	1787.20
14.00	—	—	—	—	—	—	—	1589.00	1844.50	1981.90
15.00	—	—	—	—	—	—	—	1624.00	2016.30	2222.50
16.00	—	—	—	—	—	—	—	1682.00 [6]	2142.30	2451.60
17.00	—	—	—	—	—	—	—	—	2245.40	2612.00
18.00	—	—	—	—	—	—	—	—	2337.10	2760.90
19.00	—	—	—	—	—	—	—	—	2440.20	2898.40
20.00	—	—	—	—	—	—	—	—	2520.40 [6]	3013.00
21.00	—	—	—	—	—	—	—	—	—	3104.60
22.00	—	—	—	—	—	—	—	—	—	3184.80 [6]

4 C_v = GPM at a ΔP of 1 psi/7 kPa) through the valve at any given setting.

1 psi = 2.31 ft. of H_2O

5 Only the TA Series 788 Flanged End Balancing Valve is available in 14-16" / 350-400mm sizes.

6 Full open valve.

 © 2014 Victaulic Company. All rights reserved.

Diagram

TA Series 786/787 and Series 78K

This graph shows the pressure drop across the pressure test points of the valve.

A straight line connecting the bars for flow rate, C_V and pressure drop shows the relationship between these variables. The position for each valve size is arrived at by drawing a horizontal line from the C_V value obtained.

Example:

Wanted: Pre-setting for a 1" valve at a desired flow rate of 6.7 GPM and a pressure drop of 3 ft.

Solution: Draw straight line joining 6.7 GPM and 3 ft. This gives C_V = 5.9. Now draw a horizontal line from C_V = 5.9. This intersects the bar for a 1" valve at the desired pre-setting of 2.35 turns.

Note:

If the flow rate falls outside of the scale in the diagram, the reading can be made as follows: Starting with the example above, we get 3 ft., C_V = 5.9 and the flow rate 6.7 GPM. At 3 ft. and C_V = .59 we get the flow rate .67 GPM. That is, for a given pressure drop, it is possible to read 10 times or 0.1 times the flow and C_V values.

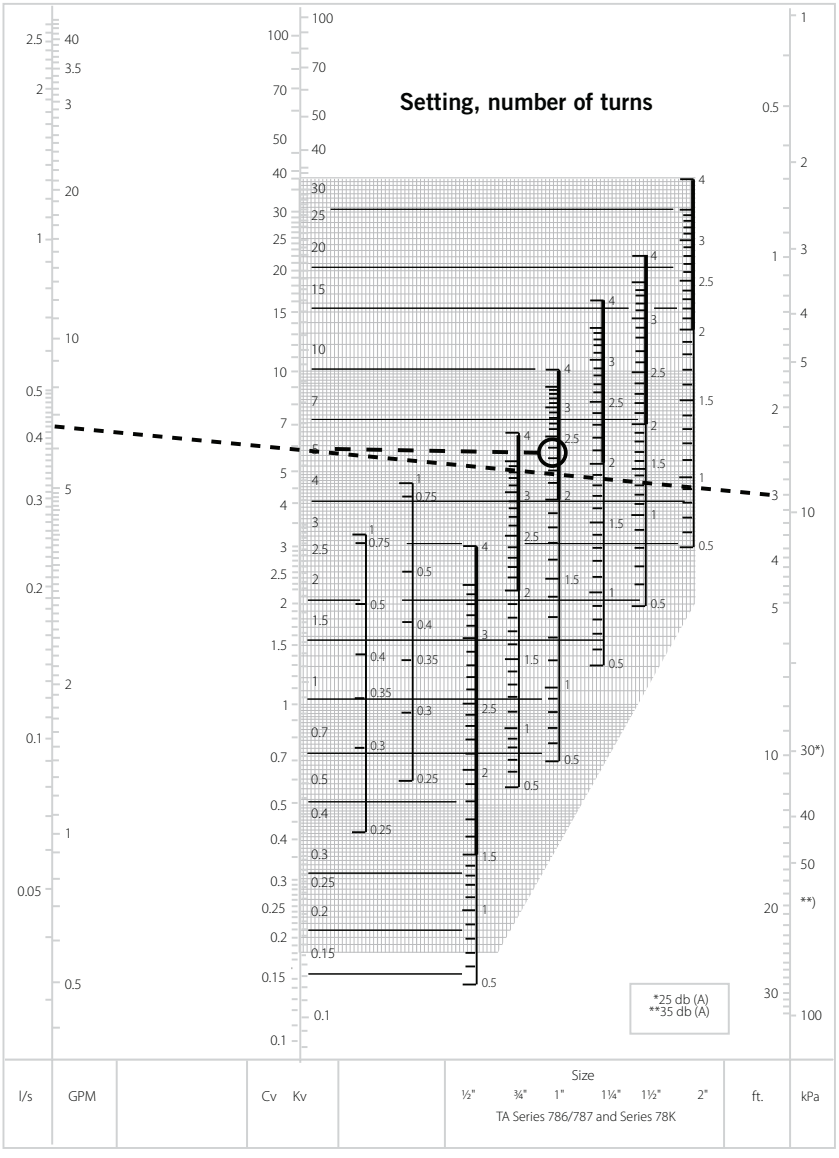

 © 2014 Victaulic Company. All rights reserved.

Diagram

TA Series 788/789
Sizes 2½ – 6"/60 – 150 mm

This graph shows the pressure drop across the pressure test points of the valve.

A straight line connecting the flow rate scale, C_V and pressure drop shows the relationship between these variables.

Example:

Wanted: Pre-setting for a TA Series 788 or TA Series 789 2 ½" at a desired flow rate of 47 GPM and a pressure drop of 2 ft. WG.

Solution: Draw straight line joining 47 GPM and 2 ft. WG. This gives C_V = 50. Now draw a horizontal line from C_V = 50. This intersects the flow rate scale for Series 788 2 ½" at the desired pre-setting of 4.5 turns.

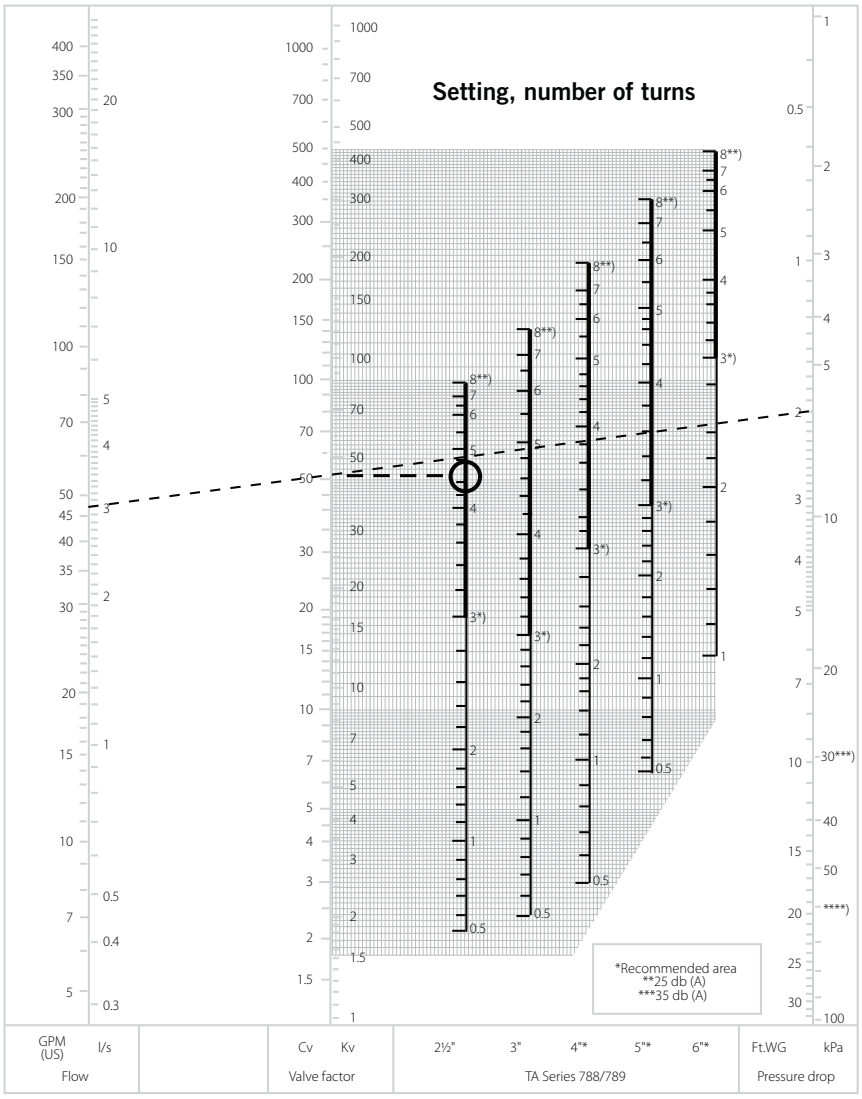

 © 2014 Victaulic Company. All rights reserved.

Diagram

TA Series 788/789
Sizes 8 – 16"/200 – 400 mm

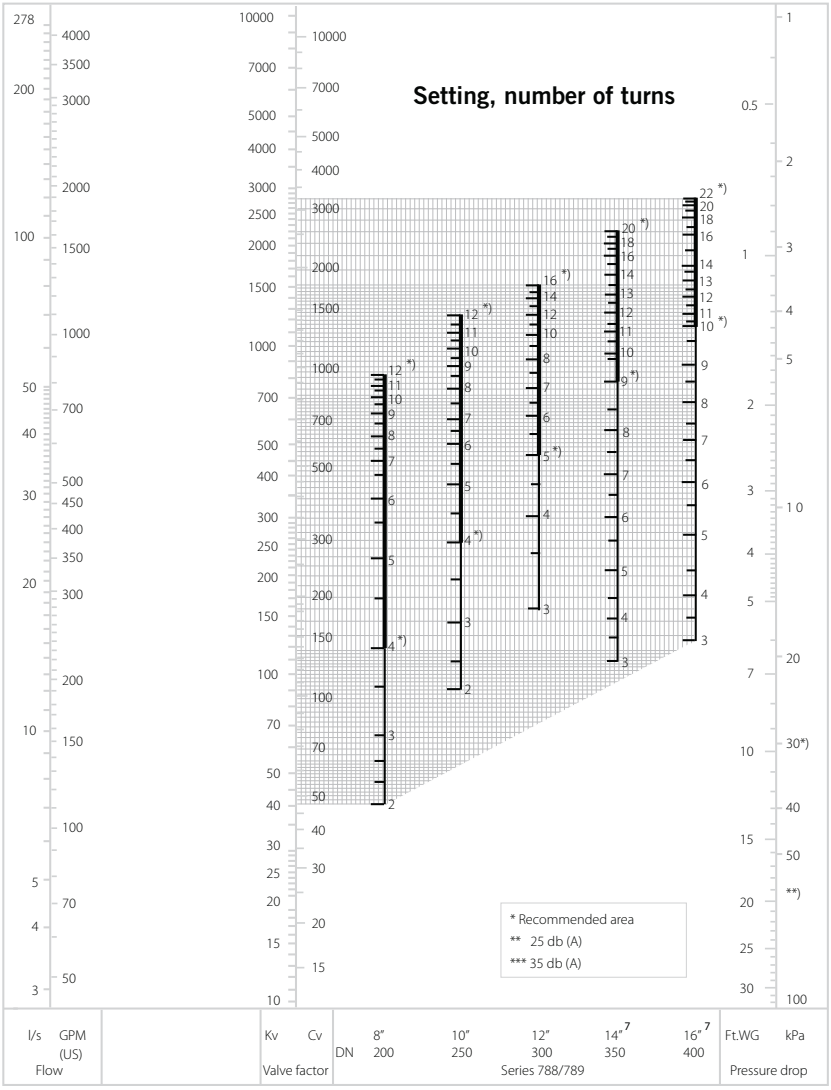

7 Only the TA Series 788 Flanged End Balancing Valve is available in 14-16" / 350-400mm sizes.

 © 2014 Victaulic Company. All rights reserved.

Typical Specifications:

SERIES 78K – (½ – 2" M x F)

TA SERIES 786 STAS – (½ – 2" SOLDER WITH DIGITAL HAND WHEEL)

TA SERIES 787 STAD – (½ – 2" NPT)

Furnish and install, as shown on the job plans, TA Series 786/787 Balancing Valves with provision for connecting a portable differential (Ft. of Head) pressure meter. Each meter shall have pressure/temperature probes.

The balancing valves shall be Y-pattern globe style design and all metal parts of nonferrous, pressure die cast, nonporous Ametal. Each valve shall provide four (4) functions:

(1) Precise flow measurement, (2) Precision flow balancing, (3) Positive shut-off with no drip seat, eliminating the need of an additional isolation valve, (4) Drain connection using 3/4 " NPT hose end thread.

These valves shall have four (4) 360° adjustment turns of the handwheel for precise setting with hidden memory to provide a tamper-proof balancing setting. Handwheel shall have digital readout. The handwheel can be installed in any position without affecting performance.

TA SERIES 788 STAF – (2 ½ – 12" FLANGED WITH DIGITAL HAND WHEEL)

TA SERIES 789 STAG – (2 ½ – 12" GROOVED WITH DIGITAL HAND WHEEL)

Furnish and install, as shown on the job plans, TA Series 788/789 Balancing valves with provision for connecting a portable differential (Ft. of Head) pressure meter. Each meter connection shall have pressure/temperature probes.

The balancing valves shall be Y-pattern globe style design with ductile iron body all other wetted parts of nonferrous, pressure die cast Ametal. Each valve shall provide three (3) functions:

(1) Precision flow measurement, (2) Precision flow balancing, (3) Shut-off feature, eliminating the need of an additional isolation valve.

These valves shall have eight (8), twelve (12), sixteen (16) or twenty-two (22) 360° adjustment turns of the handwheel for precise setting with hidden memory feature to program the valve with precision tamper-proof balancing setting. Handwheel shall have digital readout. The handwheel can be installed in any position without affecting performance.

TA Balancing Valves ½" through 2":

300 psi/2065 kPa, y-pattern, globe type with soldered or threaded ends, non-ferrous Ametal® brass copper alloy body, EPDM o-ring seals. 4-turn digital readout handwheel for balancing, hidden memory feature with locking tamper-proof setting, and connections for portable differential meter. TA Series 786 STAS or 787 STAD.

TA Balancing Valves 2 ½" through 16":

250 psi / 1725 kPa (TA Series 788) 350 psi / 2400 kPa (TA Series 789), y-pattern, globe type with flanged or grooved ends, ASTM A536 ductile iron body, all other metal parts of Ametal® brass copper alloy, EPDM O-ring seals. 8, 12, 16, 20 or 22 turn digital readout handwheel for balancing, hidden memory feature with locking tamper-proof setting, and connections for portable differential meter. TA Series 788 STAF or 789 STAG.

Purchased TA CBI-II or TA CMI balancing instruments are to be left with the project owner upon completion of the project.

Balancing Meter:

If a balancing meter is required to be left with the owner after commissioning, the balancing meter shall be from the same provider as the balancing valves, Victaulic/Tour and Andersson. The Series 734 TA-Scope, or TA Series 73M CMI Pressure Differential Meter are acceptable and are manufactured by Tour and Andersson. Needle gauge type meters will not be allowed.

INSULATION:

For insulation against heat loss or condensation. Preformed rigid polyurethane insulation is available for ½ – 2" TA Series 786/787 valves and for 2 ½ – 6" TA Series 788/789 valves.

Installation
Reference should always be made to the current TA Hydronics installation/assembly instructions for the product you are installing. For coupling and strainer installation, reference should always be made to the I-100 Victaulic Field Installation Handbook for the product you are installing. Handbooks are included with each shipment of Victaulic products for complete installation and assembly data, and are available in PDF format on our website at www.victaulic.com

Warranty
Refer to the Warranty section of the current Price List or contact Victaulic for details.

Note
This product shall be manufactured by Victaulic or to Victaulic specifications. Victaulic recommends all products to be installed in accordance with current TA Hydronics installation/assembly instructions. Victaulic and TA Hydronics reserve the right to change product specifications, designs and standard equipment without notice and without incurring obligations.

Trademarks
Victaulic® is a registered trademark of Victaulic Company.

 © 2014 Victaulic Company. All rights reserved.

BUTTERFLY VALVES FOR HEATING WITH EPDM GASKET

"Apollo" Valves

SUBMITTAL SHEET

LEAD FREE

LD141/WD141 Series

General Purpose **Butterfly Valves**

Job Name:	
Job Location:	
Engineer:	
Contractor:	
Tag:	
PO Number:	
Representative:	
Wholesale Distributor:	



DESCRIPTION

The Apollo® LD141/WD141 Series Ductile Iron Butterfly Valves are ideal for use in Industrial and HVAC/Mechanical applications. The WD141 Series is a wafer style valve and the LD141 Series is a companion lug style.

FEATURES

- Compatible with ANSI 125# & 150# Flanges
- ISO 5211 Top Plate Allows Choice of Apollo® Pneumatic Actuators and manual operators
- Conforms to MSS SP-67 & API 609
- LD141 Series Suitable for End of Line Service to Rated Pressure (2" - 12")
- 3" -24" meet performance requirements of AWWA C-504

PERFORMANCE RATING

- Pressure Rating: 2" to 12": 200 psi
- Pressure Rating: 14" to 24": 150 psi

APPROVALS

- NSF/ANSI 372 Lead Free
- CRN 0C12102.8CL

MATERIAL OPTIONS

Body

- Ductile Iron ASTM A536, (65-45-12)

Disc Material

- Aluminum Bronze
- Ductile Iron A536 Nickel Plated
- Stainless Steel, CF8M

Seat Material

- EPDM: -20°F to +250°F Intermittent, 225°F Continuous
- BUNA-N: +10°F to +180°F

Operator

- -0 - None
- -1 - 10 Position Handle
- -2 - Gear Operator (12" handwheels)
- -3 - Infinite Position Handle
- -4 - Locking Handle
- -5 - Gear Operator w/ Chain Wheel
- -7 - Locking Gear Operator
- -8 - Locking Gear Operator w/ Chain Wheel

provide nickel plated ductile iron disc

provide 10 position lever handle

STANDARD MATERIALS LIST

Part Name	Material
Body	Ductile Iron ASTM A536
Bushings	Glass Reinforced Epoxy Resin
Stem Seal	Buna-N
Shaft	416 SS ASTM A276 Type 416

TORQUE RATING * (INCH - LBS)

Valve Size In.	Valve Size mm	Full Rated Pressures (psi) ΔP 50	ΔP 100	ΔP 150	ΔP 200	Flow Cv Full Open
2	50	100	106	111	117	115
2.5	65	150	163	176	189	196
3	80	207	220	232	244	302
4	100	290	323	357	390	600
5	125	423	481	540	598	1022
6	150	599	691	783	875	1579
8	200	1060	1183	1307	1430	3136
10	250	1671	1872	2074	2275	5340
12	300	2568	2795	3023	3250	8250
14	350	2640	3070	3500	N/A	11917
16	400	4260	4880	5500	N/A	16388
18	450	6287	7243	8200	N/A	21705
20	500	8360	9180	10000	N/A	27908
24	600	15427	16813	18200	N/A	43116

** Lubricating media service*

WEIGHT

Weight WD141 (lbs.)	Weight LD141 (lbs.)
6	9
8	10
9	11
11	18
15	22
18	26
32	43
47	66
-	102
-	148
-	206
-	277
-	410
-	592

** LEAD FREE: The wetted surfaces of this product shall contain no more than 0.25% lead by weighted average. Complies with Federal Public Law 111-380. ANSI 3rd party approved and listed.*

Apollo Valves / **Conbraco Industries, Inc.**
701 Matthews Mint-Hill Road, Matthews, NC 28105 USA
www.**apollovalves**.com | (704) 841-6000

This specification is provided for reference only. Conbraco Industries Inc. reserves the right to change any portion of this specification without notice and without incurring obligation to make such changes to Conbraco products previously or subsequently sold. Please visit our website @ www.apollovalves.com for the most current information.

AALBERTS INDUSTRIES

"Apollo" Valves

SUBMITTAL SHEET

LEAD FREE

LD141/WD141 Series

General Purpose **Butterfly Valves**

WD MODEL
2" - 12"

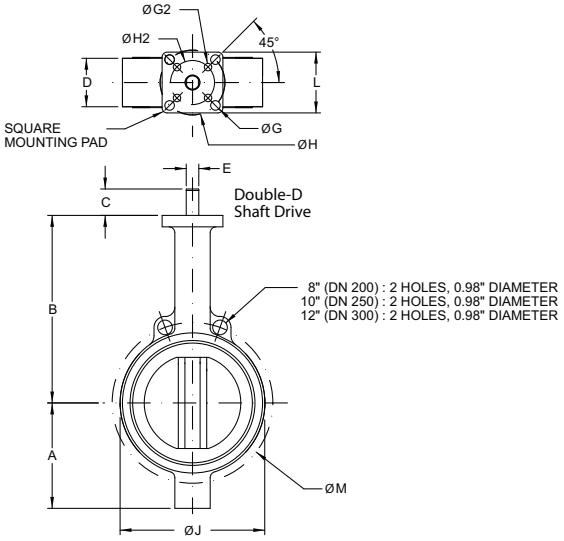

LD MODEL
2" - 12"

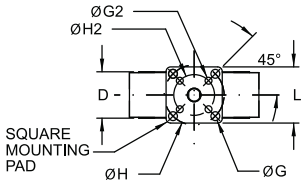

14" - 24"

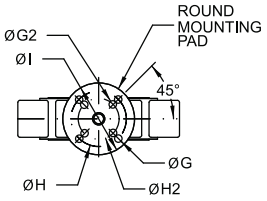

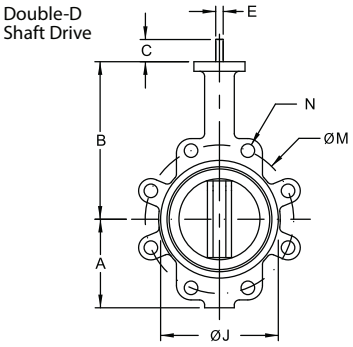

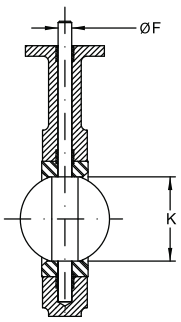

Shaft Drive:
Double-D (14")
Round & Keyed (16" & larger)

DOUBLE-D AND KEYED STEM

Size Inches	Size DN	Dimensions in Inches																	
		A	B	C	D	E	ØF	ØG	ØG2	Key	ØH	ØH2	ØI	ØJ	K	L	M	N (WD)	N (LD)
2	50	3.25	6.375	1.25	1.75	0.394	0.496	0.375	--	--	2.756	--	2.699	4	2.09	1.113	4.75	0.688	.625-11
2.5	65	3.75	6.880	1.25	1.88	0.394	0.496	0.375	--	--	2.756	--	2.699	4.75	2.54	1.706	5.50	0.688	.625-11
3	80	4.00	7.130	1.25	1.88	0.394	0.496	0.375	--	--	2.756	--	2.699	5.13	3.09	2.450	6.00	0.688	.625-11
4	100	4.88	7.880	1.25	2.13	0.472	0.621	0.375	--	--	2.756	--	2.699	6.75	4.09	3.488	7.50	0.688	.625-11
5	125	5.38	8.380	1.25	2.25	0.551	0.745	0.375	--	--	2.756	--	2.699	7.75	4.85	4.296	8.50	0.813	.625-11
6	150	5.88	8.880	1.25	2.25	0.551	0.745	0.375	--	--	2.756	--	2.699	8.63	6.13	5.697	9.50	0.813	.751-10
8	200	7.13	10.250	1.75	2.50	0.669	0.870	0.563	0.438	--	4.921	4.015	4.606	10.56	7.89	7.468	11.75	0.813	.750-10
10	250	8.25	11.500	1.88	2.75	0.866	1.120	0.563	0.438	--	4.921	4.015	4.606	13.06	9.89	9.484	14.25	0.938	.750-10
12	300	9.75	13.250	1.88	3.13	0.945	1.244	0.563	--	--	4.921	--	4.606	16	11.89	11.456	17.00	0.938	.875-9
14*	350	11.00	14.500	1.88	3.13	0.945	1.244	0.563	--	--	4.921	--	Ø5.91	17.13	13.38	13.000	18.75	1.060	.875-9
16*	400	12.00	15.750	2.00	3.50	--	1.313	0.563	--	0.313	4.921	--	Ø5.91	20	15.38	14.970	21.25	1.060	1.00-8
18*	450	14.38	16.630	2.00	4.25	--	1.500	0.813	--	0.375	6.496	--	Ø8.27	21.38	17.38	16.847	22.75	1.250	1.00-8
20*	500	14.63	18.880	2.50	5.25	--	1.625	0.813	--	0.375	6.496	--	Ø8.27	23.31	19.38	18.650	25.00	1.250	1.125-7
24*	600	18.00	22.130	2.75	6.13	--	2.000	0.813	--	0.500	6.496	--	Ø8.27	27.88	23.38	22.558	29.50	1.380	1.125-7

** LD141 Series only*

Apollo Valves / **Conbraco Industries, Inc.**
701 Matthews Mint-Hill Road, Matthews, NC 28105 USA
www.**apollovalves**.com | (704) 841-6000

This specification is provided for reference only. Conbraco Industries Inc. reserves the right to change any portion of this specification without notice and without incurring obligation to make such changes to Conbraco products previously or subsequently sold. Please visit our website @ www.apollovalves.com for the most current information.

AALBERTS INDUSTRIES

24

Mécanique Nordique
Plumbing
Heating
Ventillation
mecanique.nordique@hotmail.com
1255 Rue J.A.Bombardier Lévis QC G7A 2P4
Tél : (418) 496-1109 Fax : (418) 496-3803

REVIEWED BY CONTRACTOR
Kudlik Construction Ltd.
NAME: Sandra Rousseau P.Eng
DATE: Jul 03, 2018

IQUALUIT WWTP UPGRADES

DRAWING FOR APPROVAL

ENGINEER: **NUNAMI STANTEC LIMITED**

DRAWING #: AD-024

Section	:	23 21 14 HYDRONIC SPECIALTIES
Article	:	2.2
Plans	:	M-602
Application	:	AUTOMATIC AIR VENT
Brand	:	WATTS , ARMSTRONG
Model	:	FV-4 , 1-AV
Revised #	:	
Supplyer	:	WOLSELEY
Date	:	**02/07/2018**
By	:	Martin Boucher

STANTEC PROJECT #: 110126045
SUBMITTAL # AD-024

This review by Stantec is for general conformance with the design concept of Stantec's design of the:
☐ Architectural ☐ Electrical
☐ Structural ☐ Other
☑ Mechanical

component(s) only and does not mean that Stantec has verified or approves the shop drawing(s). The Contractor remains solely responsible for the shop drawing(s) and this review by Stantec does not relieve the Contractor of the Contractor's responsibility for errors or omissions in the shop drawing(s) or for meeting all requirements of the contract documents. This review does not mean that Stantec approves the detailed design inherent in the shop drawing, responsibility for which shall remain with the Contractor submitting same, nor does this review mean that Stantec accepts any deviation of the shop drawing(s) from the contract documents. The Contractor is responsible for confirming all dimensions and correlating them at the job site, for all construction means, methods and techniques, and for coordination of construction work of all trades, including coordination of all shop drawings.

Stantec

☑ REVIEWED
☐ REVIEWED, AS NOTED
☐ REVISE AND RESUBMIT
☐ NOT REVIEWED

DATE 2018-07-04
BY Brendan Zrum, P.Eng

TAG: SECTION 23 21 14 2.2 AUTOMATIC AIR VENT

ES-FV-4M1

For Hydronic Heating Applications

Job Name _____ Contractor _____

Job Location _____ Approval _____

Engineer _____ Contractor's P.O. No. _____

Approval _____ Representative _____

Series FV-4M1

Automatic Air Vent Valves

Sizes: ⅛" – 1" (3 – 25mm)

Series FV-4M1 Automatic Air Vent Valves provide automatic air venting for hot or cold water distribution systems. These vents purge air that may be in the water system.

The vent valve utilizes a float to actuate the valve plug which is located at the top of the valve. Once the air is displaced and the system pressure is sustained, the valve plug seals and prevents any water from escaping from the system.

The float vent can also operate as an anti-vacuum device since it will permit air to enter the system when it must be drained. It can also be installed to permit the separation and dispersal of air while fluid is actually circulating in the system.

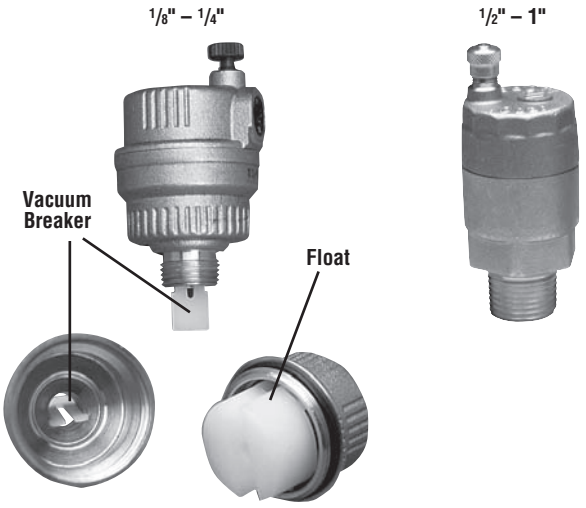

Features

- Body and cover are brass construction
- Air vent with silicone rubber seal
- Impurities do not usually affect function as maximum float line of water is always lower than the valve seal
- Float is high temperature resistant polyethylene
- Suitable for use with glycol systems
- Can be disassembled for inspection and cleaning

Pressure – Temperature

Minimum working pressure: 1.45psi (10 kPa)

Maximum working pressure: 150psi (10 bars)

Temperature Range: 33˚F – 240˚F (5˚C – 116˚C)

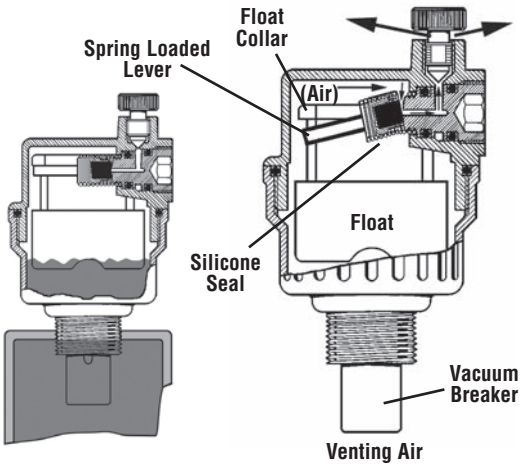

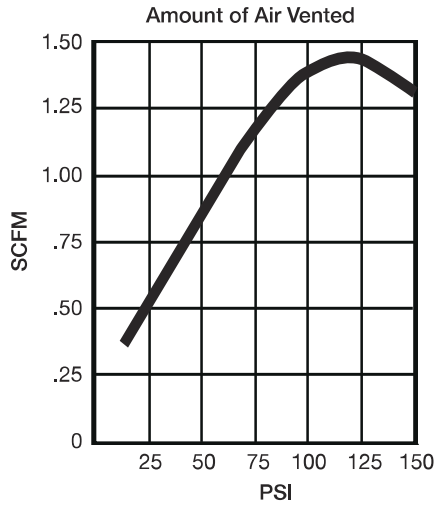

Diagram above shows the quantity of air vented by the "Float Vent" according to the pressure in the system.

Specifications

Air vent shall have brass body & cover and silicone rubber seal. Float shall be constructed of high temperature resistant polyethylene and shall be for use with glycol systems. Air vent shall be Watts Regulator Company Series FV-4M1.

WATTS® REGULATOR

Watts product specifications in U.S. customary units and metric are approximate and are provided for reference only. For precise measurements, please contact Watts Technical Service. Watts reserves the right to change or modify product design, construction, specifications, or materials without prior notice and without incurring any obligation to make such changes and modifications on Watts products previously or subsequently sold.

TAG: SECTION 23 21 14 2.2 AUTOMATIC AIR VENT

Installation

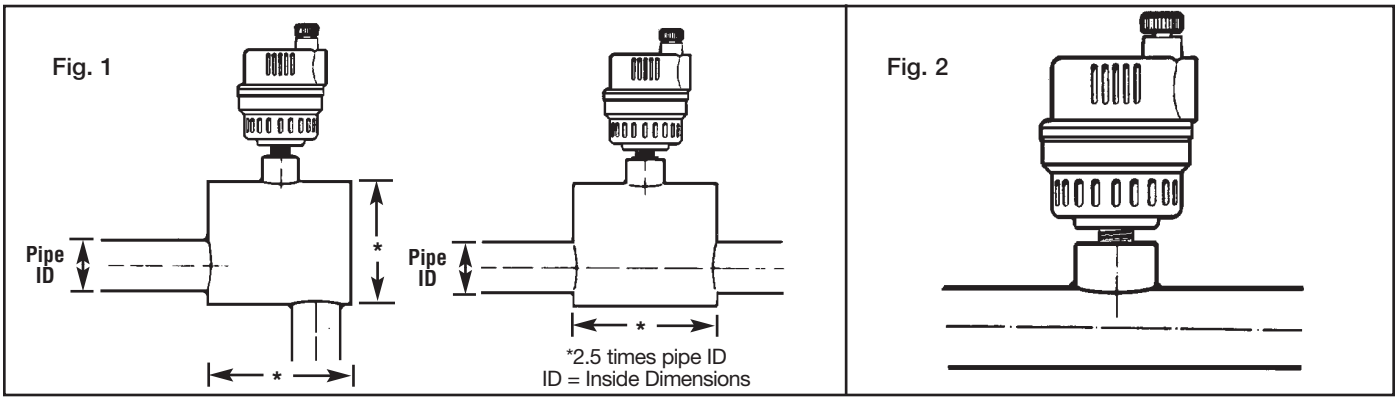

Figure 1 shows the installation of the FV-4M1 for the venting of air while the fluid is circulating in the system. The figure shows the required increase in pipe size in order to obtain proper separation of air from water. Watts Series AS Air Scoop which is designed for efficient separation of air from water in hydronic heating systems can also be installed. See Watts literature S-AS.

Figure 2 – When the FV-4M1 is installed as shown, the air will not be vented while the fluid is circulating in the system, but it can vent when the system is shut off.

The FV-4M1 should be mounted only in a vertical position as its operation is based on the vertical movement of the float (see Fig. 3).

Note: In order to get the best results in venting air from risers, use connecting pipes of at least ½" diameter between the "Float Vent" valves and the installation.

Maintenance

No maintenance is normally necessary. However, if the FV-4M1 is disassembled for inspection or cleaning it is important that when re-assembling to ensure that the spring loaded lever properly engages under the float collar (see reverse side).

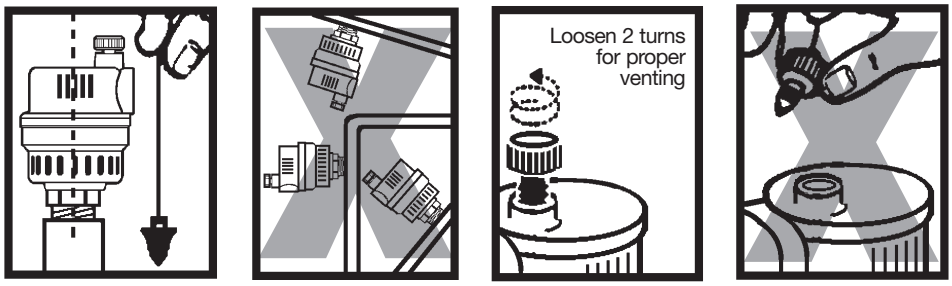

Fig. 3 Fig. 4

Operation: IMPORTANT!

After installing the FV-4M1, back off the small vent cap two turns (see Fig. 4). This is the proper operating setting which will allow air to be vented from the system. It is advisable to leave the cap on to prevent impurities from entering the valve.

Dimensions – Weights

SIZE (DN)		DIMENSIONS												WEIGHT	
		A		B		C		D		E		F			
in	mm	in	mm	in	mm	in	mm	in	mm	in	mm	in	mm	lbs	kg
⅛	3	2 15/16	75	2⅝	67	1⅝	41	13/16	21	5/16	7.9	5/16	7.9	.40	.18
¼	8	3⅛	79	2⅝	67	1⅝	41	13/16	21	⅛	3.1	½	12.7	.43	.20
½	15	3 5/16	85	2 11/16	69	1¼	32	1 1/16	18	⅝	16	–	–	.44	.20
¾	20	3⅜	85	2 11/16	69	1¼	32	1 1/16	18	⅝	16	–	–	.45	.20
1	25	3½	89	2 11/16	69	1⅜	35	1 1/16	18	13/16	20	–	–	.47	.21

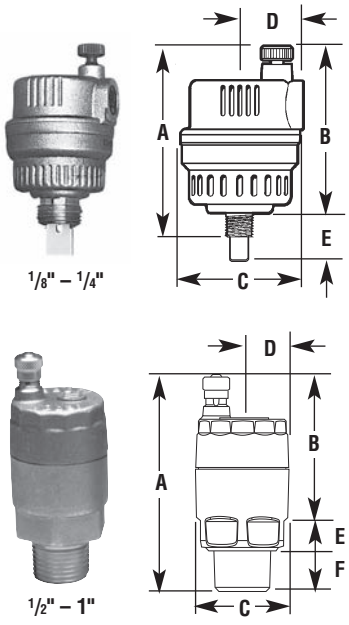

A LEADER IN VALVE TECHNOLOGY
WATTS® REGULATOR
Since 1874 — Watts Industries, Inc.
Water Products Division • Safety & Control Valves

ISO 9001 CERTIFIED

USA: 815 Chestnut St., No. Andover, MA 01845-6098; www.wattsreg.com
Canada: 5435 North Service Rd., Burlington, ONT. L7L 5H7; www.wattscda.com

© Watts Regulator Company, 2003

TAG: SECTION 23 21 14 2.2 AUTOMATIC AIR VENT

Free Floating Lever Air/Gas Vents—Cast Iron

For Pressures to 300 psig (21 bar) or Specific Gravity Down to 0.40

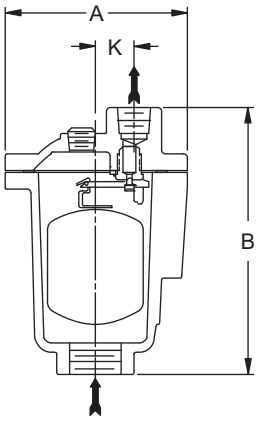

Model 1-AV

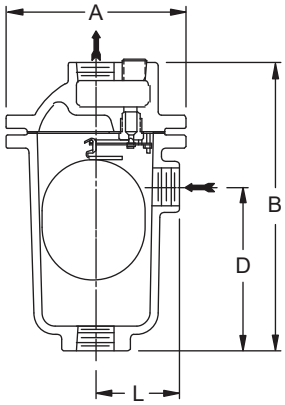

Model 2-AV, 3-AV and 6-AV



REVIEWED by MV

Armstrong free floating lever Air/Gas Vents use the same bodies, caps, lever mechanisms, valves and seats of Armstrong inverted bucket steam traps that have been proven in years of service.

Elliptical floats and high leverage make it possible to open large orifices to provide adequate capacity for vent size and weight. The hemispherical valve, seat and leverage are identical in design, materials and workmanship to those for saturated steam service up to 1,000 psig, with the exception of the addition of a guidepost to assure a positive, leaktight valve closing under all conditions.

1-AV—A cast iron air vent that uses a positive-closing free floating lever to ensure leaktight closing under all conditions. This vent is good for low capacity air/gas venting up to 300 psi.

For a fully detailed certified drawing, refer to CD #1070.

2-AV, 3-AV and 6-AV—Cast iron vents using the same proven free floating lever mechanisms used in Armstrong steam traps. For applications where high air/gas venting capacity is required up to 250 psi.

For a fully detailed certified drawing, refer to CD #1034.

Physical Data

Model No.	Cast Iron							
	1-AV**		2-AV		3-AV		6-AV	
Pipe Connections	in	mm	in	mm	in	mm	in	mm
	1/2*, 3/4*	15, 20	1/2, 3/4	15, 20	3/4, 1	20, 25	1-1/2, 2	40, 50
"A"	3-3/4	89	5-1/4	133	6-3/8	162	10-3/16	259
"B"	5-1/2	140	8	203	10-5/8	270	17	432
"D"	-	-	4-3/4	111	6-3/32	155	8-3/8	213
"K"	13/16	21	-	-	-	-	-	-
"L"	-	-	2-7/16	62	2-7/8	73	4-5/8	-
Weight, lb (kg)	4 (1.8)		13 (6)		22 (10)		80 (36)	
Max. Allowable Pressure (Vessel Design)	300 psig @ 200°F (21 bar @ 93°C) 250 psig @ 450°F (17 bar @ 232°C)		250 psig @ 450°F (17 bar @ 232°C)					

*Outlet connection 1/4" (7 mm). **1-AV available with side connection if specified on order. On models 2-AV, 3-AV and 6-AV, pipe size of side connections is same as that of inlet and outlet connections. Some floats are oil filled. Consult factory for details.

List of Materials

Model No.	Valve & Seat	Leverage System	Float	Body & Cap	Gasket	Bolts	Nuts
1-AV	Stainless Steel			ASTM A48 Class 30 Cast Iron	Non-asbestos	ASTM A193 Gr. B7	ASTM A563 Gr. A
2-AV						SAE Gr. 2	
3-AV							
6-AV							

All dimensions and weights are approximate. Use certified print for exact dimensions. Design and materials are subject to change without notice.

Armstrong Steam and Condensate Group, 816 Maple St., Three Rivers, MI 49093 – USA Phone: (269) 273-1415 Fax: (269) 278-6555
www.armstrong-intl.com

Free Floating Lever Air/Gas Vents—Cast Iron

For Pressures to 300 psig (21 bar) or Specific Gravity Down to 0.40

Armstrong®

1-AV Maximum Operating Pressures		
Minimum Specific Gravity	0.80	
Orifice Size (in)	Maximum Operating Pressure	
	psi	**bar**
1/8	146	10
7/64	173	12
#38	219	15
5/64	300	21

Maximum Operating Pressures of free floating lever vents with weighted floats for different orifice sizes, and the specific gravities on which they can be used.

2-AV Maximum Operating Pressures																						
Specific Gravity*	1.00		0.95		0.90		0.85		0.80		0.75		0.70		0.65		0.60		0.55		0.50	
Float wt., oz (g)	7.7 (217)		7.3 (206)		6.9 (195)		6.5 (184)		6.1 (174)		5.7 (163)		5.4 (152)		5.0 (141)		4.6 (130)		4.2 (119)		3.8 (109)	
Orifice Size (in)	Maximum Operating Pressure																					
	psi	bar	psi	bar	psi	bar	psi	bar	psi	bar	psi	bar	psi	bar	psi	bar	psi	bar	psi	bar	psi	bar
5/16	27	1.8	25	1.8	24	1.7	23	1.6	22	1.5	20	1.4	19	1.3	18	1.2	16	1.1	15	1.0	14	0.9
1/4	44	3.0	42	2.9	40	2.7	38	2.6	35	2.4	33	2.3	31	2.1	29	2.0	27	1.8	24	1.7	22	1.5
3/16	97	6.7	92	6.4	88	6.0	83	5.7	78	5.4	73	5.0	68	4.7	64	4.4	59	4.1	54	3.7	49	3.4
5/32	167	12	159	11	151	10.4	142	9.8	134	9.3	126	8.7	118	8.1	110	7.6	101	7.0	93	6.4	85	5.8
1/8	250	17	250	17	250	17	244	17	230	16	216	15	202	14	187	13	173	12	159	11	145	10.0
7/64	250	17	250	17	250	17	250	17	250	17	250	17	250	17	240	17	222	15	204	14	186	13
#38	250	17	250	17	250	17	250	17	250	17	250	17	250	17	250	17	250	17	250	17	231	16
5/64	250	17	250	17	250	17	250	17	250	17	250	17	250	17	250	17	250	17	250	17	250	17

3-AV Maximum Operating Pressures																		
Specific Gravity*	1.00		0.95		0.90		0.85		0.80		0.75		0.70		0.65		0.60	
Float wt., oz (g)	14.9 (423)		14.2 (402)		13.4 (381)		12.7 (360)		12.0 (339)		11.2 (318)		10.5 (296)		9.7 (275)		9.0 (254)	
Orifice Size (in)	Maximum Operating Pressure																	
	psi	bar	psi	bar	psi	bar	psi	bar	psi	bar	psi	bar	psi	bar	psi	bar	psi	bar
1/2	21	1.5	20	1.4	19	1.3	18	1.3	17	1.2	16	1.1	15	1.0	14	1.0	13	0.9
3/8	45	3.1	43	3.0	41	2.8	38	2.7	36	2.5	34	2.3	32	2.2	30	2.0	27	1.9
5/16	72	5.0	69	4.7	65	4.5	61	4.2	58	4.0	54	3.8	51	3.5	47	3.3	44	3.0
9/32	96	6.6	91	6.3	87	6.0	82	5.6	77	5.3	72	5.0	68	4.7	63	4.3	58	4.0
1/4	144	9.9	137	9.4	130	8.9	123	8.5	116	8.0	109	7.5	102	7.0	94	6.5	87	6.0
7/32	206	14	196	13	186	13	176	12	165	11	155	10.7	145	10.0	135	9.3	125	8.6
3/16	250	17	250	17	250	17	250	17	249	17	234	16	218	15	203	14	188	13
5/32	250	17	250	17	250	17	250	17	250	17	250	17	250	17	250	17	250	17

6-AV Maximum Operating Pressures																										
Specific Gravity*	1.00		0.95		0.90		0.85		0.80		0.75		0.70		0.65		0.60		0.55		0.50		0.45		0.40	
Float wt., oz (g)	73.5 (2,084)		69.8 (1,979)		66.2 (1,875)		62.5 (1,771)		58.8 (1,667)		55.1 (1,563)		51.5 (1,459)		47.8 (1,354)		44.1 (1,250)		40.4 (1,146)		36.8 (1,042)		33.1 (938)		29.4 (833)	
Orifice Size (in)	Maximum Operating Pressure																									
	psi	bar	psi	bar	psi	bar	psi	bar	psi	bar	psi	bar	psi	bar	psi	bar	psi	bar	psi	bar	psi	bar	psi	bar	psi	bar
1-1/16	22	1.5	21	1.5	20	1.4	19	1.3	18	1.2	17	1.2	16	1.1	14	1.0	13	0.9	12	0.8	11	0.8	10	0.70	9	0.62
7/8	35	2.4	33	2.3	31	2.2	30	2.0	28	1.9	26	1.8	24	1.7	23	1.6	21	1.5	19	1.3	18	1.2	16	1.1	14	1
3/4	50	3.5	48	3.3	45	3.1	43	3.0	40	2.8	38	2.6	35	2.4	33	2.3	30	2.1	28	1.9	25	1.8	23	1.6	20	1.4
5/8	77	5.3	73	5.0	69	4.8	66	4.5	62	4.3	58	4.0	54	3.7	50	3.5	46	3.2	43	2.9	39	2.7	35	2.4	31	2.2
9/16	102	7.0	97	6.7	92	6.3	87	6.0	82	5.6	77	5.3	72	4.9	67	4.6	62	4.2	57	3.9	51	3.6	46	3.2	41	3.9
1/2	148	10.2	140	9.7	133	9.2	126	8.7	119	8.2	111	7.7	104	7.2	97	6.7	89	6.2	82	5.6	75	5.1	67	4.6	60	4.1
7/16	210	14	200	14	189	13	179	12	168	12	158	11	148	10.2	137	9.5	127	8.7	116	8.0	106	7.3	96	6.6	85	5.9
3/8	250	17	250	17	250	17	250	17	250	17	249	17	233	16	216	15	200	14	184	13	167	12	151	10.4	134	9.3
11/32	250	17	250	17	250	17	250	17	250	17	250	17	250	17	250	17	250	17	245	17	223	15	201	14	179	12
5/16	250	17	250	17	250	17	250	17	250	17	250	17	250	17	250	17	250	17	250	17	250	17	250	17	230	16
9/32	250	17	250	17	250	17	250	17	250	17	250	17	250	17	250	17	250	17	250	17	250	17	250	17	250	17
1/4	250	17	250	17	250	17	250	17	250	17	250	17	250	17	250	17	250	17	250	17	250	17	250	17	250	17

*If specific gravity falls between those shown, use next lowest: e.g., if actual gravity is 0.73, use 0.70 specific gravity data.

25

Mécanique Nordique
Plumbing Heating Ventillation
mecanique.nordique@hotmail.com
1255 Rue J.A.Bombardier Lévis QC G7A 2P4
Tél : (418) 496-1109 Fax : (418) 496-3803

REVIEWED BY CONTRACTOR
Kudlik Construction Ltd.
NAME: Sandra Rousseau P.Eng
DATE: Jul 03, 2018

IQUALUIT WWTP UPGRADES

DRAWING FOR APPROVAL

ENGINEER: **NUNAMI STANTEC LIMITED**

DRAWING #: AD-025

Section	:	23 05 21 THERMOMETERS & PRESSURE GAUGE
Article	:	2.2 , 2.3 , 2.4 ,
Plans	:	M-602 , M-603
Application	:	DIRECT THERMOMETERS & PRESSURE GAUGE
Brand	:	BI METAL THERMOMETERS
Model	:	TBM30040 B1 & B8 , P9S90201 , P9S90203
Revised #	:	
Supplyer	:	WOLSELEY
Date	:	**02/07/2018**
By	:	Martin Boucher

STANTEC PROJECT #: 110126045
SUBMITTAL # AD-025

This review by Stantec is for general conformance with the design concept of Stantec's design of the:
☐ Architectural ☐ Structural ☑ Mechanical ☐ Electrical ☐ Other

Stantec

component(s) only and does not mean that Stantec has verified or approves the shop drawing(s). The Contractor remains solely responsible for the shop drawing(s) and this review by Stantec does not relieve the Contractor of the Contractor's responsibility for errors or omissions in the shop drawing(s) or for meeting all requirements of the contract documents. This review does not mean that Stantec approves the detailed design inherent in the shop drawing, responsibility for which shall remain with the Contractor submitting same, nor does this review mean that Stantec accepts any deviation of the shop drawing(s) from the contract documents. The Contractor is responsible for confirming all dimensions and correlating them at the job site, for all construction means, methods and techniques, and for coordination of construction work of all trades, including coordination of all shop drawings.

☑ REVIEWED
☐ REVIEWED, AS NOTED
☐ REVISE AND RESUBMIT
☐ NOT REVIEWED

DATE 2018-07-04
BY Brendan Zrum, P.Eng

TAG: SECTION 23 05 21 2.2 DIRECT READING THERMOMETERS



Description & Features:

- A general purpose, versatile 1" (25mm) to 6" (150mm) dial, 304 stainless steel thermometer
- Bi-metallic sensing element for reliable readings
- Back, bottom or adjustable angle connection
- Welded stem length from 2.5" (63mm) and up
- ±1% accuracy
- Anti-parallax dial that reduces operator reading errors
- Re-zero adjustment screws are standard on the 2" (50mm) to 6" (150mm) dials
- 5 year warranty

Applications:

- Industrial process, food processing and wastewater

Specifications	
Dial	1” (25mm), 2” (50mm), 3” (75mm), 4” (100mm), 5” (125mm), 6” (150mm) aluminum with black markings, dish-shaped
Case	AISI 304 SS
Stem	AISI 304 SS welded to socket, centre back, bottom or adjustable angle configurations (316 SS optional*) 2” (50mm): centre back connection only
Recalibrator	Standard**
Lens	1” (25mm): Acrylic Others: Glass standard, hermetically sealed
Ring	AISI 304 SS
Connection	1” (25mm): None 2” (50mm): ¼” NPT standard 3” (75mm), 4” (100mm), 5” (125mm), 6” (150mm): ½” NPT standard
Sensing Element	Bi-metallic coil
Pointer	Aluminum, painted black
Maximum Operating Pressure	125 psi (861 kPa)
Operating Temperature	75% of full scale value (recommended maximum)
Ambient Temperature	-58°F to 248°F (-50°C to 120°C)
Accuracy	±1%
Enclosure Rating	IP68

*Contact Winters for 316 SS requirements
**Not available on 1” pocket and 2” laboratory thermometer
Note: The use of a thermowell is recommended to protect the thermometer in corrosive or pressure applications, as well as to maintain a closed system during its removal from the process

TAG: SECTION 23 05 21 2.2 DIRECT READING THERMOMETERS

Order Codes (products in bold are normally in stock)

To order, specify the code for each dial/stem length and the range: i.e. TBM20025 - B26

Dial Size	Stem Length	Fixed Centre Back	Bottom	Adjustable Angle
1" (25mm) pocket thermometer	5" (125mm)	**TBM10050**	-	-
2" (50mm) lab thermometer	8" (200mm)	**TBM20080**	-	-
2" (50mm)	2.5" (63mm)	**TBM20025**	-	-
	4" (100mm)	**TBM20040**	-	-
	6" (150mm)	**TBM20060**	-	-
	9" (225mm)	**TBM20090**	-	-
	12" (300mm)	**TBM20120**	-	-
3" (75mm)	2.5" (63mm)	**TBM30025**	TBM31025	**TBM32025**
→	4" (100mm)	**TBM30040**	TBM31040	**TBM32040**
	6" (150mm)	**TBM30060**	TBM31060	**TBM32060**
	9" (225mm)	**TBM30090**	TBM31090	**TBM32090**
	12" (300mm)	**TBM30120**	TBM31120	**TBM32120**
4" (100mm)	2.5" (63mm)	TBM40025	TBM41025	TBM42025
	4" (100mm)	TBM40040	TBM41040	TBM42040
	6" (150mm)	TBM40060	TBM41060	TBM42060
	9" (225mm)	TBM40090	TBM41090	TBM42090
	12" (300mm)	TBM40120	TBM41120	TBM42120
5" (125mm)	2.5" (63mm)	**TBM50025**	TBM51025	**TBM52025**
	4" (100mm)	**TBM50040**	TBM51040	**TBM52040**
	6" (150mm)	**TBM50060**	TBM51060	**TBM52060**
	9" (225mm)	**TBM50090**	TBM51090	**TBM52090**
	12" (300mm)	**TBM50120**	TBM51120	**TBM52120**
6" (150mm)	2.5" (63mm)	TBM60025	TBM61025	TBM62025
	4" (100mm)	TBM60040	TBM61040	TBM62040
	6" (150mm)	TBM60060	TBM61060	TBM62060
	9" (225mm)	TBM60090	TBM61090	TBM62090
	12" (300mm)	TBM60120	TBM61120	TBM62120

Available Ranges					
°F & °C (Dual)	Code	°F only	Code	°C Only	Code
DUCT → -100°F to 150°F & -70°C to 70°C	**B1**	-40°F to 120°F	**B14**	-80°C to 50°C	B26
-40°F to 120°F & -40°C to 50°C	B2	-40°F to 160°F	**B15**	-50°C to 50°C	B27
0°F to 140°F & -20°C to 60°C	**B3**	0°F to 140°F	**B16**	0°C to 50°C	B28
-40°F to 160°F & -40°C to 70°C	**B4**	0°F to 200°F	**B17**	-50°C to 100°C	B29
25°F to 125°F & - 5°C to 50°C	B5	20°F to 240°F	**B18**	0°C to 100°C	B30
0°F to 200°F & -20°C to 90°C	**B6**	0°F to 250°F	**B19**	-20°C to 120°C	B31
20°F to 240°F & - 5°C to 115°C	B7	50°F to 300°F	**B20**	0°C to 150°C	B32
HW & DW → 0°F to 250°F & -20°C to 120°C	**B8**	50°F to 400°F	**B21**	0°C to 200°C	B33
50°F to 300°F & 10°C to 150°C	**B9**	50°F to 550°F	**B22**	0°C to 300°C	B34
50°F to 400°F & 10°C to 200°C	**B10**	150°F to 750°F	**B23**	0°C to 450°C	B35
50°F to 500°F & 10°C to 260°C	**B11**	0°F to 800°F	B24	100°C to 550°C	B36
150°F to 750°F & 100°C to 400°C	**B12**	200°F to 1,000°F	B25	-	-
200°F to 1,000°F & 100°C to 540°C	**B13**	-	-	-	-

Other ranges, stem lengths and connection sizes available upon request. Flat dial on 6" model available. For glycerin fill, maximum temperature limit is 300°F (150°C). Silicone fill available.

Option suffix:

AP3 = 3" acrylic lens
AP4 = 4" acrylic lens
AP5 = 5" acrylic lens
AP6 = 6" acrylic lens

BG3 = 3" glycerin filling
BG4 = 4" glycerin filling
BG5 = 5" glycerin filling
BG6 = 6" glycerin filling

DUCT = Aluminum duct flange
SCK = Socket conversion kit
SPG3 = 3" Shatterproof glass lens
SPG5 = 5" Shatterproof glass lens

Note: The use of a thermowell is recommended to protect the thermometer from corrosive or damaging environments, as well as to maintain a closed system during its removal from the process

TAG: SECTION 23 05 21 2.2 DIRECT READING THERMOMETERS

1” Back Connection

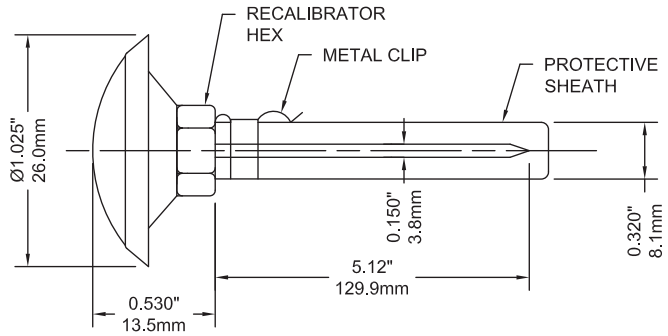

2” Back Connection

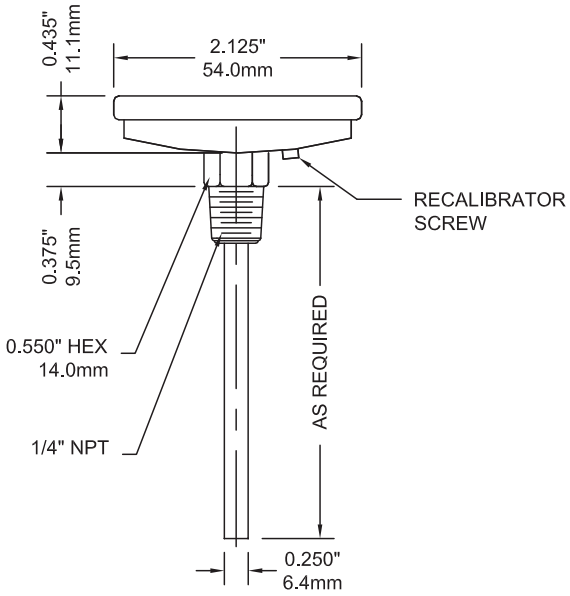

3” Adjustable Angle Connection

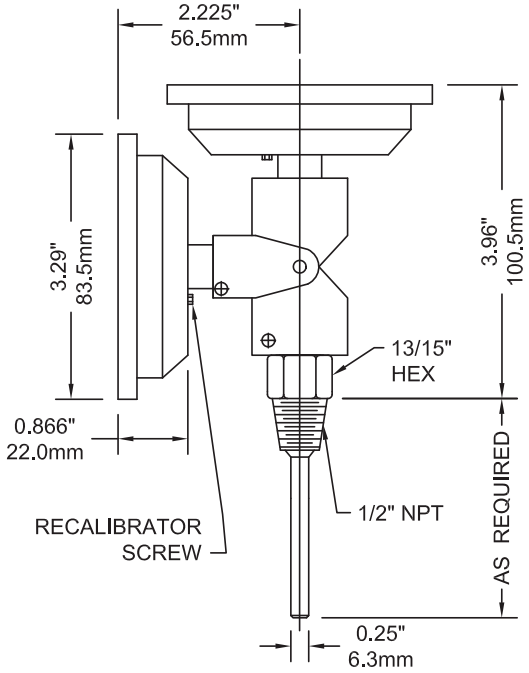

4” Back Connection

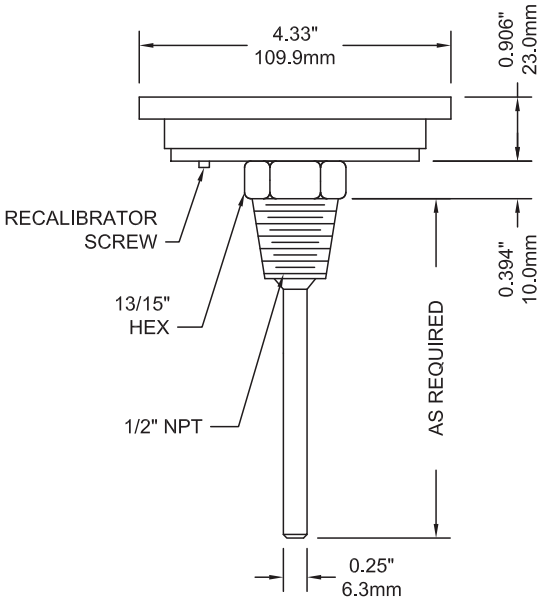

TBR Bi-Metal Threaded Thermowell

TAG: SECTION 23 05 21 2.3 THERMOWELL



RoHS compliant

Description & Features:

- Available in a wide range of materials for use on most applications
- Standard “stepped construction” offering is complemented by an array of custom thermowells including: straight, tapered, sanitary and flanged configurations
- CRN registered
- 1 year warranty

Applications:

- Allows for the creation of a “sealed system”, whereby the thermometer can be removed from the application without the need for shutting down or draining the system
- To protect the thermometer from possible exposure to the process media

Specifications	
Thermometer Connection	½” NPT female connection standard Other thread sizes are available upon request
Process Connection	¾”, ½” or 1” NPT connection standard Other thread sizes are available upon request
Bore	0.260” (6.5mm) bore standard
Construction	Stepped construction standard Tapered construction available upon request
Material	Brass, AISI 304 SS, AISI 316 SS standard Other materials available upon request

Material	Pressure - Temperature Rating (PSI)						
	70°F (21°C)	200°F (93°C)	400°F (204°C)	600°F (316°C)	800°F (427°C)	1000°F (538°C)	1200°F (649°C)
Brass	5,000	4,200	1,000	-	-	-	-
304 SS	7,000	6,200	5,600	5,400	5,200	4,500	1,650
316 SS	7,000	7,000	6,400	6,200	6,100	5,100	2,500

Note: For process media velocities above 10m/s (30 feet/s) contact Winters

TAG: SECTION 23 05 21 2.3 THERMOWELL

Order Codes (Thermowells without lag. Products in bold are normally in stock)

Stem Length A	NPT Connection P	Material	Code	Standard Insertion Length U	Shank Diameter
2.5" (63mm)	½"	Brass	**TBR2550**	1⅜" (35mm)	½" (12.5mm)
		304 SS	**TBR2550-1**		
		316 SS	**TBR2550-2**		
	¾"	Brass	**TBR25**		
		304 SS	**TBR25-1**		
		316 SS	**TBR25-2**		
4" (100mm)	½"	Brass	**TBR3550**	2.5" (63mm)	½" (12.5mm)
		304 SS	**TBR3550-1**		
		316 SS	**TBR3550-2**		
	¾"	Brass	**TBR35**		
		304 SS	**TBR35-1**		
		316 SS	**TBR35-2**		
	1"	Brass	TBR35100		
		304 SS	TBR35100-1		
		316 SS	TBR35100-2		
6" (150mm)	½"	Brass	**TBR650**	4.5" (115mm)	⅝" (16mm)
		304 SS	**TBR650-1**		
		316 SS	**TBR650-2**		
	¾"	Brass	**TBR6**		¾" (19mm)
		304 SS	**TBR6-1**		
		316 SS	**TBR6-2**		
	1"	Brass	TBR6100		⅞" (22mm)
		304 SS	TBR6100-1		
		316 SS	**TBR6100-2**		
9" (229mm)	½"	Brass	TBR950	7.5" (190mm)	⅝" (16mm)
		304 SS	TBR950-1		
		316 SS	TBR950-2		
	¾"	Brass	TBR9		¾" (19mm)
		304 SS	**TBR9-1**		
		316 SS	TBR9-2		
	1"	Brass	TBR9100		⅞" (22mm)
		304 SS	TBR9100-1		
		316 SS	TBR9100-2		
12" (305mm)	½"	Brass	TBR1250	10.5" (266mm)	⅝" (16mm)
		304 SS	TBR1250-1		
		316 SS	TBR1250-2		
	¾"	Brass	TBR12		¾" (19mm)
		304 SS	TBR12-1		
		316 SS	TBR12-2		
	1"	Brass	TBR12100		⅞" (22mm)
		304 SS	TBR12100-1		
		316 SS	TBR12100-2		

TAG: SECTION 23 05 21 2.3 THERMOWELL

Order Codes (Thermowells with lag. Products in bold are normally in stock)

Stem Length A	NPT Connection P	Material	Code	Standard Insertion Length U	Lag Length T	Shank Diameter
6" (150mm)	½"	Brass	TBRN650	2.5" (63mm)	2"	½" (12.5mm)
		304 SS	TBRN650-1			
		316 SS	TBRN650-2			
	¾"	Brass	**TBRN6**	2.5" (63mm)	2"	½" (12.5mm)
		304 SS	**TBRN6-1**			
		316 SS	TBRN6-2			
	1"	Brass	TBRN6100	2.5" (63mm)	2"	½" (12.5mm)
		304 SS	TBRN6100-1			
		316 SS	**TBRN6100-2**			
9" (229mm)	½"	Brass	TBRN950	4.5" (115mm)	3"	⅝" (16mm)
		304 SS	TBRN950-1			
		316 SS	TBRN950-2			
	¾"	Brass	TBRN9	4.5" (115mm)	3"	¾" (19mm)
		304 SS	TBRN9-1			
		316 SS	TBRN9-2			
	1"	Brass	TBRN9100	4.5" (115mm)	3"	⅞" (22mm)
		304 SS	TBRN9100-1			
		316 SS	TBRN9100-2			
12" (305mm)	½"	Brass	TBRN1250	7.5" (190mm)	3"	⅝" (16mm)
		304 SS	TBRN1250-1			
		316 SS	TBRN1250-2			
	¾"	Brass	TBRN12	7.5" (190mm)	3"	¾" (19mm)
		304 SS	TBRN12-1			
		316 SS	TBRN12-2			
	1"	Brass	TBRN1210	7.5" (190mm)	3"	⅞" (22mm)
		304 SS	TBRN1210-1			
		316 SS	TBRN1210-2			

Other configurations available. ¼" NPT thermometer connection available. BSP threads available upon request. Tapered construction available upon request. Other lengths available up to 48" (welded construction only). Other materials such as Monel®, Inconel®, Hastelloy® C and Titanium are available upon request.

Note: Standard well is stepped as shown to 0.5" OD except U=2.5". Straight shank supplied as an option. Specify additional lagging extensions as needed

Option suffix:
SCK = Socket Conversion Kit
W60 = Brass cap and chain (½")
W60-1 = Stainless steel cap and chain (½")

Hastelloy® is a registered trademark of Haynes International, Inc.
Inconel® is a registered trademark of Special Metals Corporation
Monel® is a registered trademark of Inco Alloys International

TAG: SECTION 23 05 21 2.3 THERMOWELL

Standard Thermowell without lag

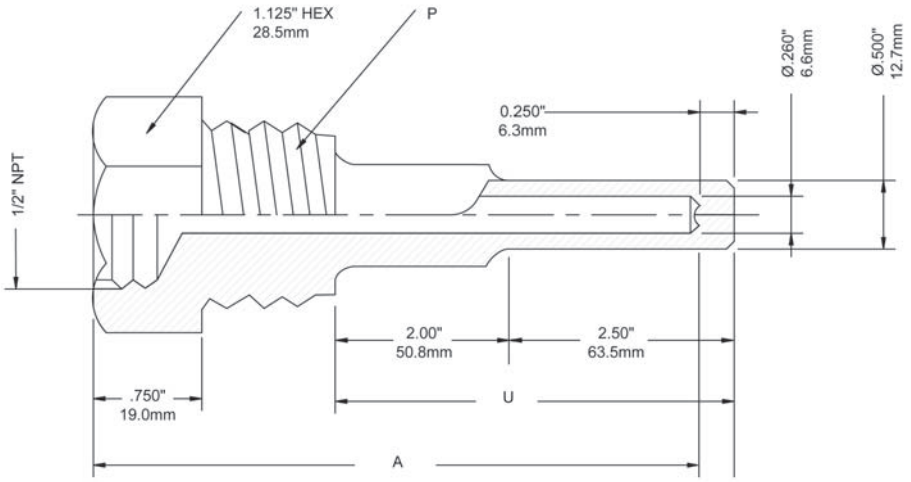

Standard Thermowell with lag

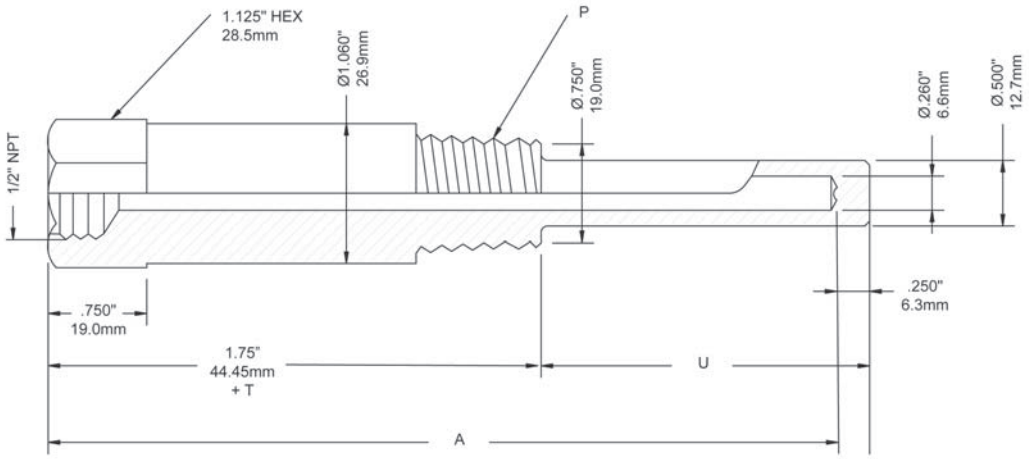

TAG: SECTION 23 05 21 2.4 PRESSURE GAUGES



Description & Features:

- A general-purpose gauge that is serviceable and pulsation resistant
- 1.5” (40mm) to 3.5” (90mm) dial sizes
- Dampened movement combined with a flutterless pointer
- Removable lens
- Zero-adjustment
- ASME B40.100 compliant
- CRN registered
- ±2-1-2% accuracy
- 5 year warranty

Applications:

- Compressors, filters, regulators, water pumps, paint sprayers and a variety of other rapid pressure fluctuation applications
- Suitable for non-clogging and non-corroding media

Specifications	
Dial	1.5” (40mm), 2” (50mm), 2.5” (63mm), 3.5” (90mm) white aluminum with black and red markings
Case	Steel, painted black
Lens	Acrylic, threaded
Socket	Brass
Connection	1/8” NPT or 1/4” NPT standard
Bourdon Tube	Phosphor bronze
Movement	Brass (flutterless) with zero adjustment
Pointer	Aluminum, black
Welding	<1,000 psi: 60% tin 40% lead, ≥1,000 psi: silver alloy
Over-pressure Limit	25% of full scale value
Working Pressure	Maximum 75% of full scale value
Ambient/Process Temperature	-40°F to 150°F (-40°C to 65°C)
Accuracy	±2-1-2% ANSI/ASME Grade A

1.5” Bottom Connection

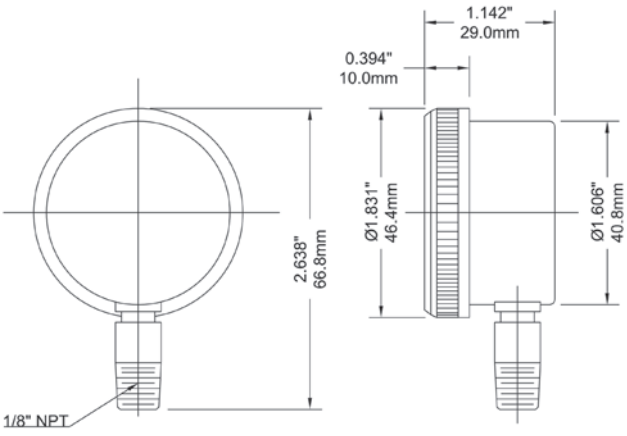

1.5” Back Connection

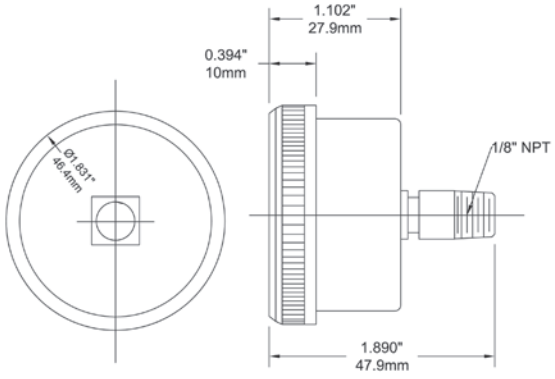

Economy

HW

DW

TAG: SECTION 23 05 21 2.4 PRESSURE GAUGES

Order Codes (products in bold are normally stock in North America)

Dial Size	1.5" (40mm)		2" (50mm)				2.5" (63mm)		3.5" (90mm)	
Connection	1/8" Bottom	1/8" Back (CB)	1/8" Bottom	1/8" Back (CB)	1/4" Bottom	1/4" Back (CB)	1/4" Bottom	1/4" Back (CB)	1/4" Bottom	1/4" Back (CB)
30" Hg Vac/kPa	P9S901297	P9S901397	P9S90195	P9S901424	P9S90135	P9S901428	P9S90210	P9S901431	P9S90220	P9S901455
30"/0/15 psi/kPa	-	-	-	-	-	-	P9S90152	-	-	-
30"/0/30 psi/kPa	-	-	-	-	-	-	**P9S90153**	-	-	-
30"/0/60 psi/kPa	-	-	-	-	-	-	P9S90154	-	-	-
30"/0/100 psi/kPa	-	-	-	-	-	-	P9S90155	-	-	-
0/15 psi/kPa	P9S901299	**P9S901399**	P9S90196	P9S901425	**P9S90136**	**P9S901429**	**P9S90211**	P9S901436	P9S90229	P9S901464
0/30 psi/kPa	P9S901300	**P9S901400**	P9S90206	P9S901402	P9S90199	**P9S901403**	**P9S90212**	P9S901437	**P9S90221**	P9S901456
0/60 psi/kPa	**P9S901301**	P9S901401	P9S90207	P9S901404	P9S90201	**P9S901405**	**P9S90213**	P9S901438	P9S90222	P9S901457
0/100 psi/kPa	P9S901320	P9S901420	P9S90208	P9S901406	**P9S90202**	**P9S901407**	**P9S90214**	P9S901439	**P9S90223**	P9S901458
0/160 psi/kPa	P9S901321	**P9S901421**	P9S90197	P9S901408	P9S90203	**P9S901409**	**P9S90215**	P9S901440	P9S90224	P9S901459
0/200 psi/kPa	P9S901322	P9S901422	P9S90209	P9S901426	P9S90204	P9S901410	**P9S90216**	P9S901441	**P9S90225**	P9S901460
0/300 psi/kPa	P9S901323	P9S901423	P9S90198	P9S901427	P9S90205	P9S901411	P9S90217	P9S901442	P9S90226	P9S901461
0/400 psi/kPa	P9S901324	P9S901443	P9S901449	P9S901445	P9S901451	P9S901447	P9S90219	P9S901453	P9S90227	P9S901462
0/600 psi/kPa	P9S901325	**P9S901444**	P9S901450	P9S901446	P9S901452	P9S901448	P9S90218	P9S901454	P9S90228	P9S901463

Other ranges and connection sizes available upon request. For scale change, refer to How to Order Guide for scale codes.

2" Bottom Connection

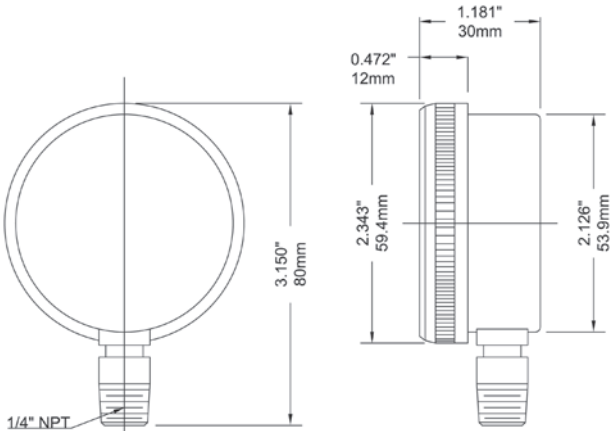

2" Back Connection

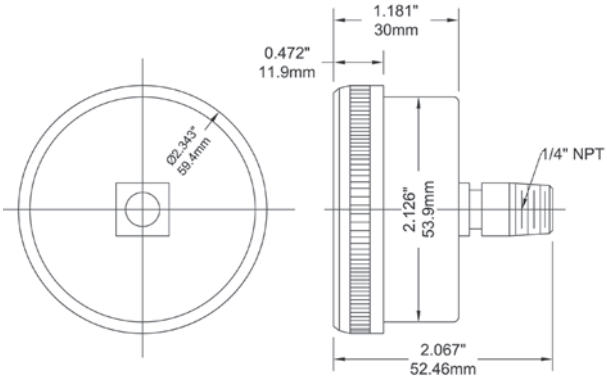

26

REVIEWED BY CONTRACTOR
Kudlik Construction Ltd.
NAME: Sandra Rousseau P.Eng
DATE: Jul 06, 2018

Mécanique Nordique Plumbing Heating Ventillation
mecanique.nordique@hotmail.com

1255 Rue J.A.Bombardier
Lévis, Québec
G7A 2P4
Téléphone: 418-496-1109
Télécopieur: 418-496-3803

IQALUIT WWTP UPGRADE

DRAWING FOR APPROVAL

Ingineer : NUNAMI STANTEC

DRAWING #: AD-026

Section		
Article		
Plans	M-801	Plumbing Fixtures Schedule
Application	: LV-1	
Brand	: American Standard	Moen
Model	: 7820.400	L64600
Revised #	: 1	
Supplyer	:Deschenes	
Pages incl.	5	
Date	: **2018-07-06**	
By	: **Mécanique Nordique Inc.**	

STANTEC PROJECT #: 110126045
SUBMITTAL # AD-026

This review by Stantec is for general conformance with the design concept of Stantec's design of the:
☐ Architectural ☐ Electrical
☐ Structural ☐ Other
☑ Mechanical

Stantec

component(s) only and does not mean that Stantec has verified or approves the shop drawing(s). The Contractor remains solely responsible for the shop drawing(s) and this review by Stantec does not relieve the Contractor of the Contractor's responsibility for errors or omissions in the shop drawing(s) or for meeting all requirements of the contract documents. This review does not mean that Stantec approves the detailed design inherent in the shop drawing, responsibility for which shall remain with the Contractor submitting same, nor does this review mean that Stantec accepts any deviation of the shop drawing(s) from the contract documents. The Contractor is responsible for confirming all dimensions and correlating them at the job site, for all construction means, methods and techniques, and for coordination of construction work of all trades, including coordination of all shop drawings.

☑ REVIEWED
☐ REVIEWED, AS NOTED
☐ REVISE AND RESUBMIT
☐ NOT REVIEWED

DATE 2018-07-13
BY Brendan Zrum, P.Eng

American Standard
Style That Works Better

BARRIER FREE

TAG : LV-1

NEWBERN™ VANITY TOP
FINE FIRE CLAY

NEWBERN™ VANITY TOP

❑ **7820.400** Faucet holes on 4" centers
❑ **7820.800** Faucet holes on 8" centers

- Seamless one piece design made from Fine Fire Clay
- Interior Oval bowl design
- Includes 1" backsplash
- Fits most standard 30" vanities
- Pre-drilled for 4" and 8" faucet holes
- Includes safety overflow design

Nominal Dimensions:
31-1/8" x 22-7/8"
(791 x 581 mm)

Bowl sizes:
16" (406mm) wide
13" (330mm) front to back
6-1/2" (165mm) deep

Compliance Certifications -
Meets or Exceeds the Following Specifications:
- ASME A112.19.9M for Non-Vitreous Ceramic Fixtures

To Be Specified
❑ Color: ❑ White
❑ Faucet:
❑ Faucet Finish:
❑ Supplies:
❑ Trap:

* See faucet section for additional models available



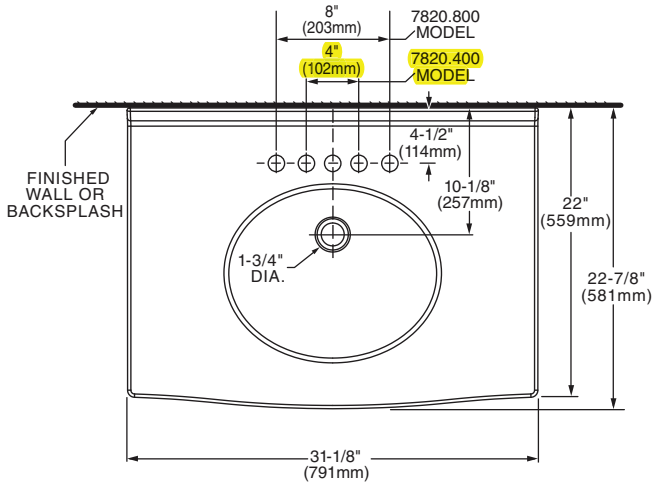

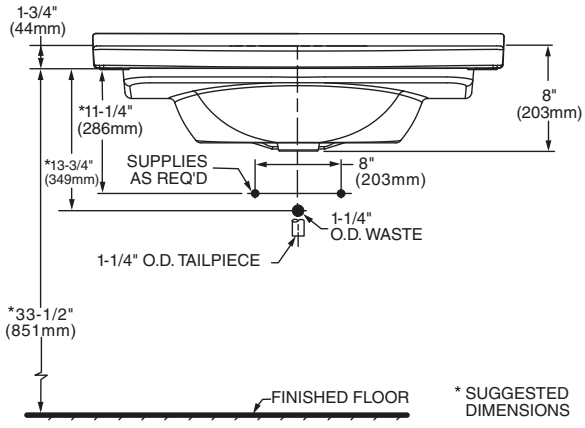

NOTES:
* DIMENSIONS SHOWN FOR LOCATION OF SUPPLIES AND "P" TRAP ARE SUGGESTED.
FITTINGS NOT INCLUDED WITH FIXTURE AND MUST BE ORDERED SEPARATELY.
FOR COUNTERTOP CUTOUT AND INSTALLATION INSTRUCTIONS USE TEMPLATE SUPPLIED WITH SINK.

IMPORTANT: Dimensions of fixtures are nominal and may vary within the range of tolerances established by ANSI Standard A112.19.9M. These measurements are subject to change or cancellation. No responsibility is assumed for use of superseded or voided pages.

© 2011 AS America Inc.

MOEN

Buy it for looks. Buy it for life.®

Specifications

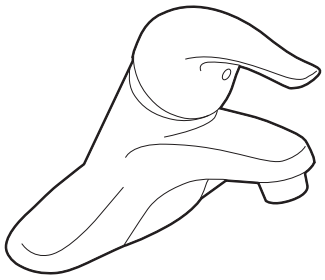

CHATEAU®
Single-Handle Lavatory Faucet

with Metal Waste Assembly
Model: L4625 series
L4631BC
Bulk Packed (12 per carton):
L64624 series

with 50/50 Waste Assembly
Bulk Packed (12 per carton):
L64625 series

Less Waste
Bulk Packed (12 per carton):
L64600 series

NOTE: THIS FAUCET IS DESIGNED TO BE INSTALLED THRU 3-1" DIA. HOLES, 2" ON CENTER

DESCRIPTION
- Metal construction with various finishes identified by suffix
- 16" long 3/8" tubing connections
- Includes metal or 50/50 pop-up type waste assembly where noted

OPERATION
- Pivot action lever style handle
- Temperature controlled through 180˚ degree arc of handle travel

FLOW
- Flow is limited to 1.5 gpm max (5.7L/min) at 60 psi

CARTRIDGE
- 1225 cartridge design
- Nonmetallic/nonferrous and stainless steel material
- Can accommodate reversed piping and back to back installations

STANDARDS
- Third party certified to WaterSense,® CSA B-125.1, ASME A112.18.1 and all applicable requirements referenced therein including NSF61/9
- Complies with California Proposition 65 and with the Federal Safe Drinking Water Act
- **ADA** for lever handle

WARRANTY
- Lifetime limited warranty against leaks, drips and finish defects to the original consumer purchaser
- 5 year warranty if used in commercial installations

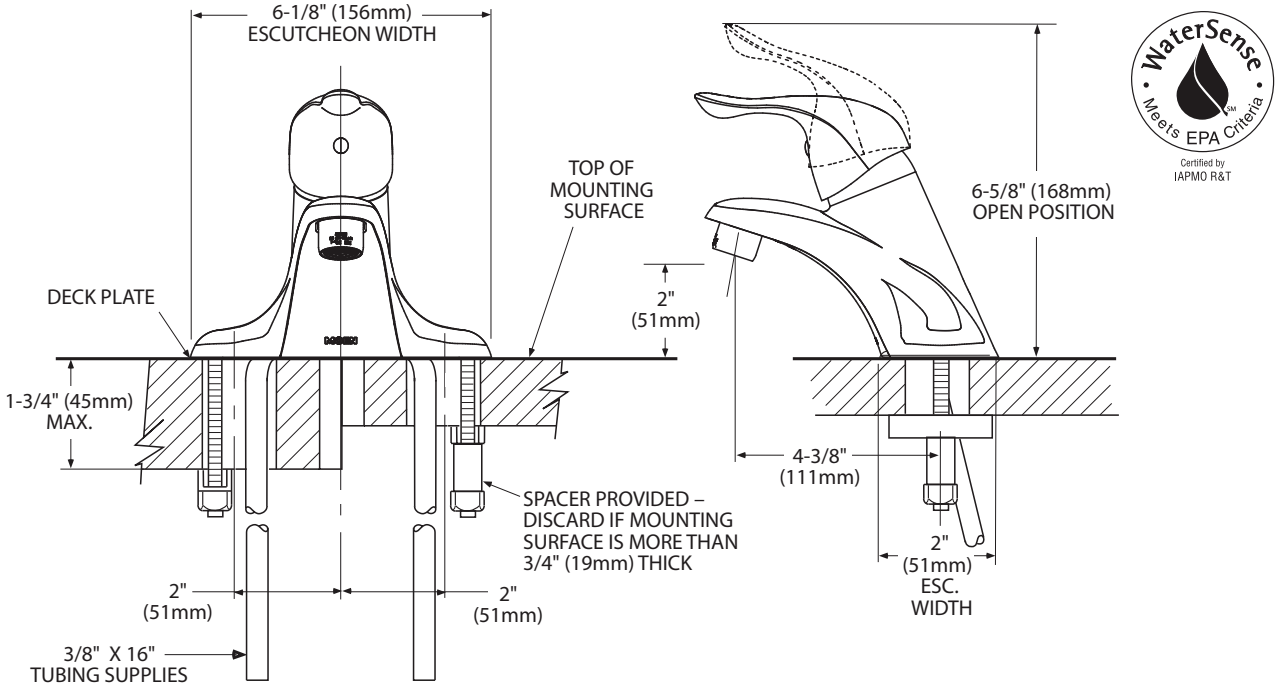

CRITICAL DIMENSIONS

(DO NOT SCALE)

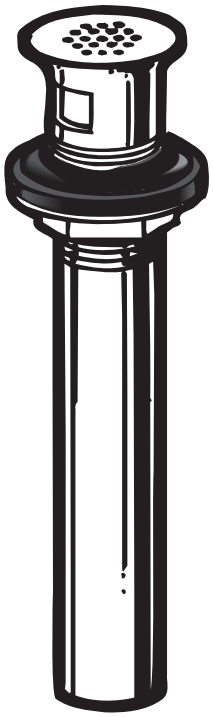

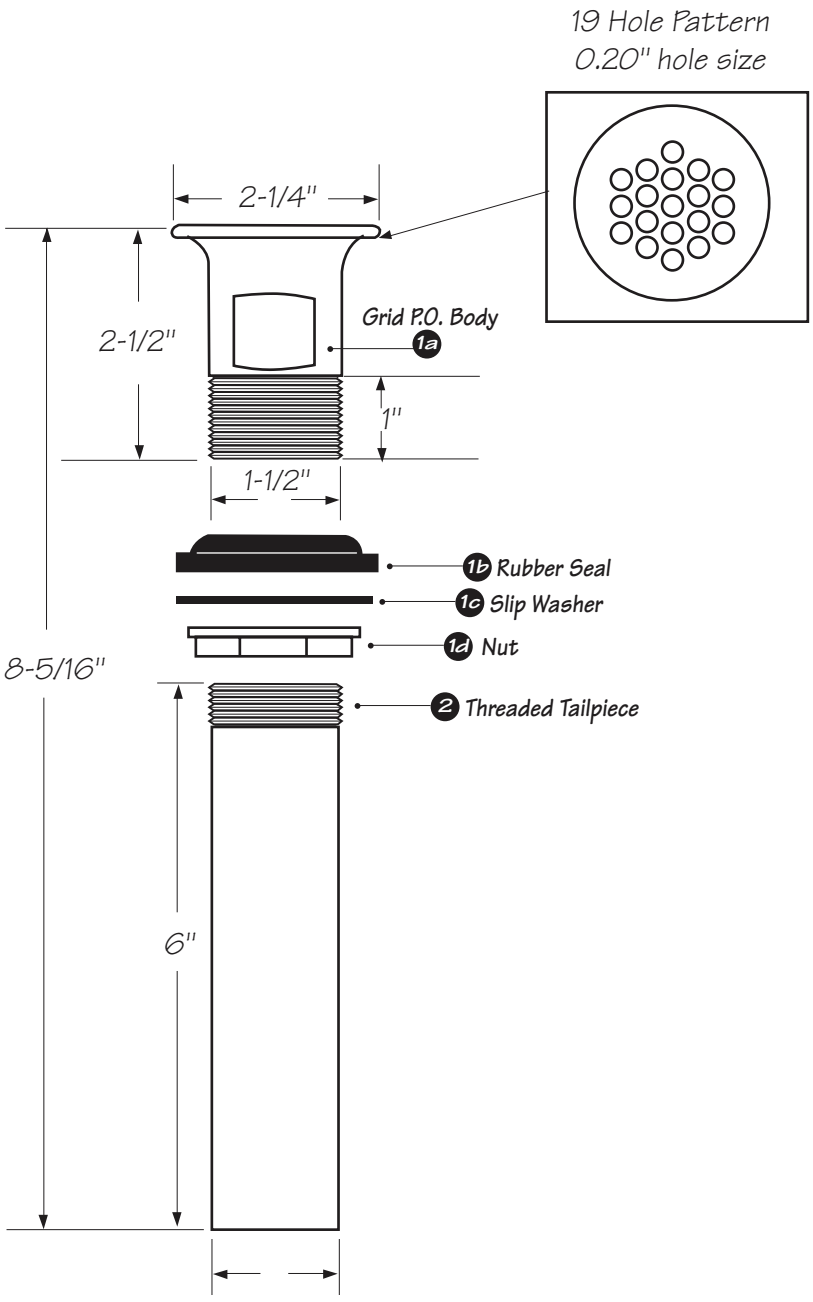

1	370	Grid P.O. Body Assembly
2	4831-6	17 Gauge Tailpiece

OS&B
OAKVILLE STAMPING & BENDING

Date: March 31/00	Approved by:	Drawn by: S.Black
Scale: not to scale		Revision: 01
Product: P.O. Plug		Number: 3700

McGuire Manufacturing Co., Inc.
60 Grandview Court
P.O. Box 746 • Cheshire, CT 06410
203-699-1801 • Fax: 203-699-1813
www.mcguiremfg.com

PRODUCT SPECIFICATION

Part No.
8872, 8902, 8902CNC, 8912, 8912CNC, 8903, 8904

Cast Body P-Trap With or Without Cleanout

Job Name: _____ **Submittal Number:** _____

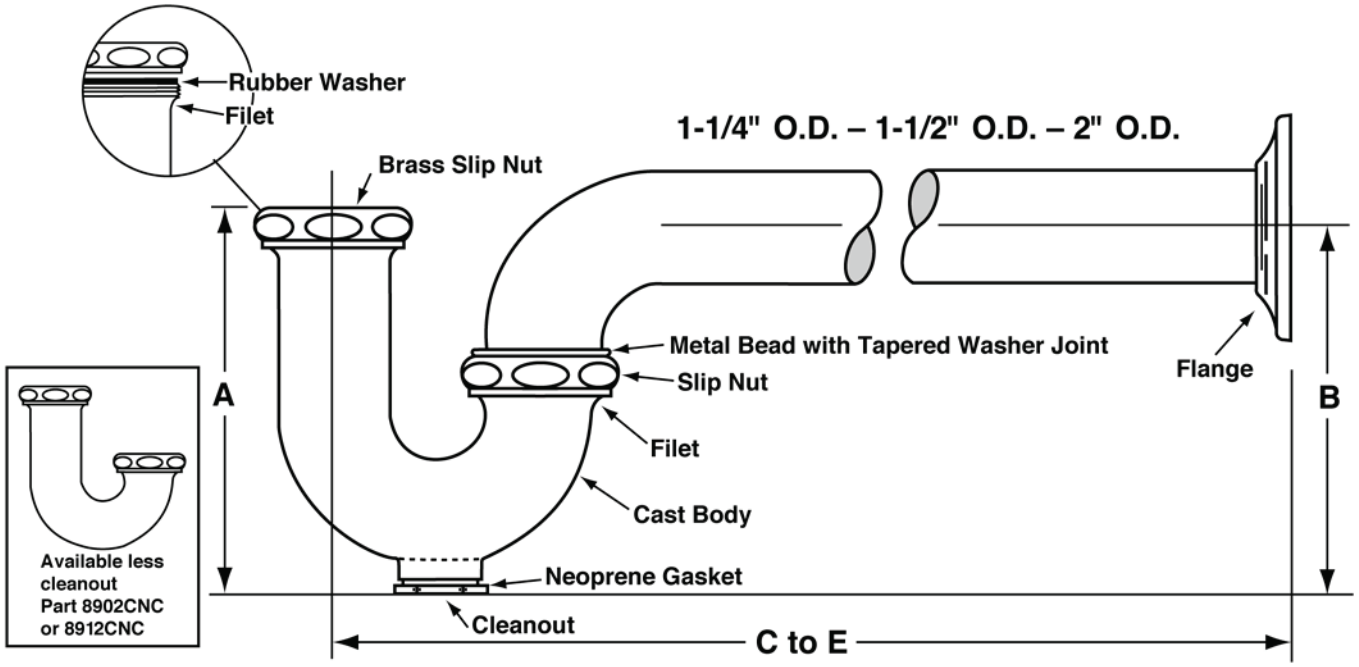

PROFESSIONAL LINE

ROUGHING MEASUREMENTS					
NO.	TRAP DIMENSIONS		A	B	C to E
	INLET	OUTLET			
8872	1-1/4"	1-1/4"	4-1/2"	4-1/4"	11-1/2"
8902	1-1/4"	1-1/2"	5"	5-1/2"	11-1/2"
8902CNC	1-1/4"	1-1/2"	4-5/8"	4-3/4"	11-1/2"
8912	1-1/2"	1-1/2"	5"	5-1/2"	11-1/2"
8912CNC	1-1/2"	1-1/2"	4-5/8"	4-1/8"	11-1/2"
8903	1-1/2"	2"	5"	6"	13-3/4"
8904	2"	2"	5"	6"	13-3/4"

FED SPEC W.W.P. 541
CAST BRASS P TRAP
MINIMUM SEAL 2"

See options and accessories section for details on product variations.

ASME A112.18.1-2011/CSA B125-2.11

Specifications:

P-Trap shall be chrome plated cast brass body (with, without) cleanout, with 17 gauge seamless tubular wall bend, cast brass slip nuts. Reducing washers shall be used with reducing cast brass nut. With (shallow, deep, bell) (steel, brass) or (forged brass with set screw) flange. P-Trap shall be McGuire "Classic" Professional Line (8872C, 8902C, 8912C, 8903, 8904). Trap shall be certified by CSA or other recognized testing authority. P-Trap shall bear manufacturer and testing mark.

© 2015 McGuire Manufacturing Co., Inc. All rights reserved / I Traps / www.mcguiremfg.com

MOEN

Buy it for looks. Buy it for life.®

Illustrated Parts

CHATEAU®
Single-Handle Lavatory Faucet

MODEL		WASTE	FINISH	MODEL		WASTE	FINISH
L4621	Lav 1/2" connections	Metallic	Chrome	L64600	Lav 3/8" flex supplies	None	Chrome
L4621BC	Lav 1/2" connections	Metallic	Brushed Chrome	L64601	Lav 1/2" connections	None	Chrome
L4621P	Lav 1/2" connections	Metallic	Polished Brass	L64621	Lav 1/2" connections	50/50	Chrome
L4625	Lav 3/8" flex supplies	Metallic	Chrome	L64624	Lav 3/8" flex supplies	Metallic	Chrome
L4601	Lav 1/2" connections	None	Chrome	L64625	Lav 3/8" flex supplies	50/50	Chrome
L4605	Lav 1/2" connections	None	Chrome	L64635	Lav 1/2" connections	Metallic	Chrome
L4631BC	Lav 3/8" flex supplies	Metallic	Brushed Chrome	L64620	Lav 1/2" connections	Metallic	Chrome
L4635	Lav 1/2" connections	Metallic	Chrome				
L4621BN	Lav 1/2" connections	Metallic	Brushed Nickel				

■ **Order by Part Number**

There is more than 1 version of this model.
Page down to identify the version you have.

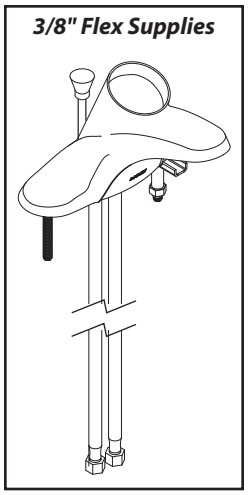

Pop-Up Plug ***(50/50 Waste)*** **12314**

Chrome Only

TO ORDER PARTS LL: 1-800-BUY-MOEN
www.moen.com

MOEN

Buy it for looks. Buy it for life.®

Illustrated Parts

CHATEAU®
Single-Handle Lavatory Faucet

MODEL		WASTE	FINISH	MODEL		WASTE	FINISH
L4621	Lav 1/2" connections	Metallic	Chrome	L64600	Lav 16" supplies	None	Chrome
L4621CP	Lav 1/2" connections	Metallic	Chrome/Pol. Brass	L64601	Lav 1/2" connections	None	Chrome
L4621BC	Lav 1/2" connections	Metallic	Brushed Chrome	L64621	Lav 1/2" connections	50/50	Chrome
L4621P	Lav 1/2" connections	Metallic	Polished Brass	L64624	Lav 16" supplies	Metallic	Chrome
L4625	Lav 16" supplies	Metallic	Chrome	L64625	Lav 16" supplies	50/50	Chrome
L4601	Lav 1/2" connections	None	Chrome	L64635	Lav 1/2" connections	Metallic	Chrome
L4605	Lav 1/2" connections	None	Chrome	L64620	Lav 1/2" connections	Metallic	Chrome
L4635	Lav 1/2" connections	Metallic	Chrome				

■ **Order by Part Number**

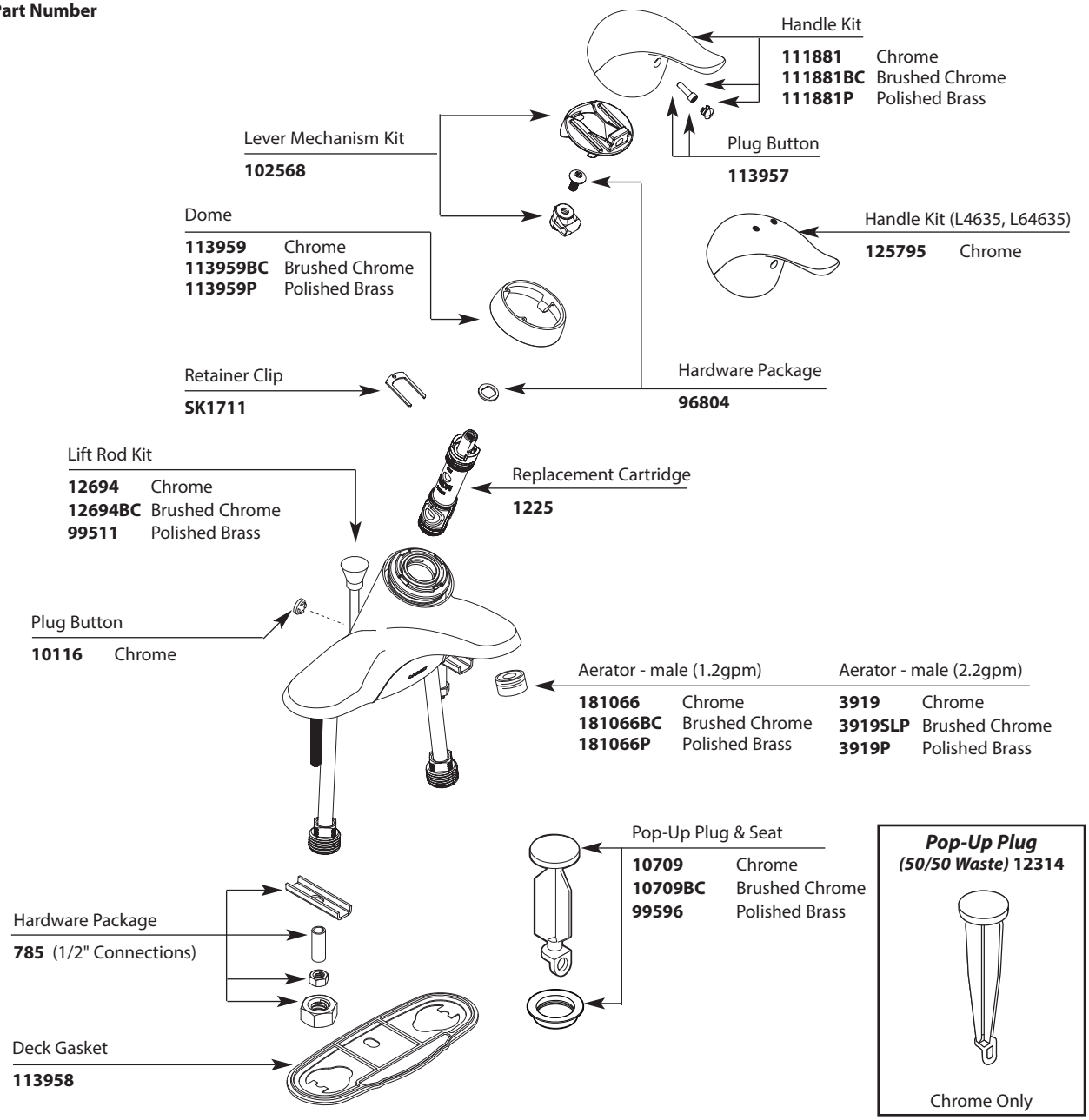

Pop-Up Plug
(50/50 Waste) **12314**

Chrome Only

ON12NOV16 EXP12NOV18 5900026603
Released/02

MOEN

Buy it for looks. Buy it for life.®

Illustrated Parts

CHATEAU®

Single-Handle Lavatory Faucet

MODEL	HANDLE TYPE	FINISH
L4621	Lever	Chrome
L4621CP	Lever	Chrome/Pol. Brass
L4621P	Lever	Polished Brass
L4601	Lever	Chrome
L64601	Lever	Chrome
L4605	Lever	Chrome
L4635	Lever	Chrome

DISCONTINUED STYLE

MODEL	HANDLE TYPE	FINISH
L64621	Lever	Chrome
L64621P	Lever	Polished Brass
L64621W	Lever	Glacier
L64620	Lever	Chrome
L64635	Lever	Chrome

■ Order by Part Name and **Part Number (Bold Face Type)**

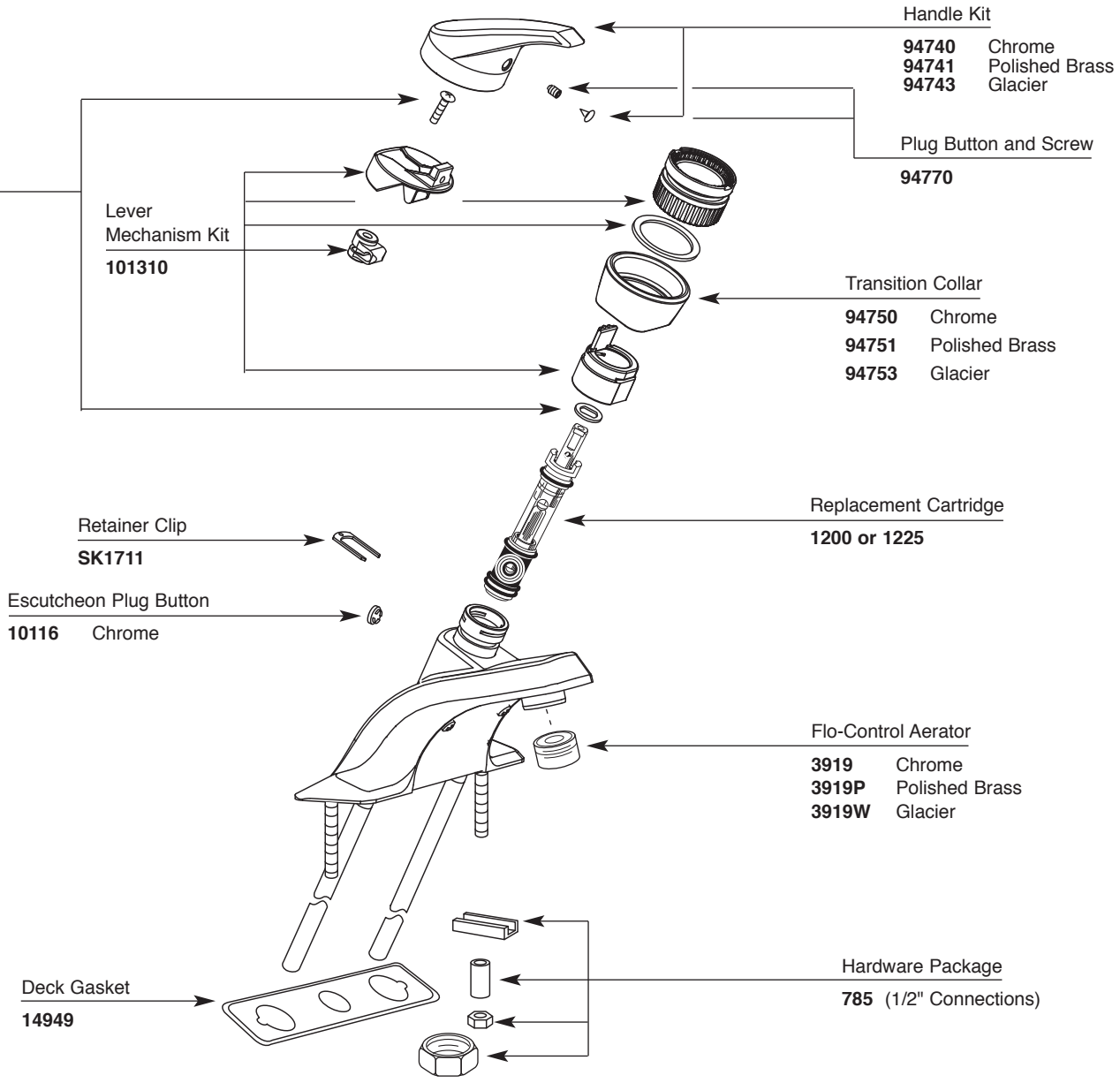

27

REVIEWED BY CONTRACTOR

Kudlik Construction Ltd.

NAME: Sandra Rousseau P.Eng

DATE: Aoû 22, 2018

Mécanique Nordique
Plumbing
Heating
Ventillation
mecanique.nordique@hotmail.com

1255 Rue J.A.Bombardier
Lévis, Québec
G7A 2P4
Téléphone: 418-496-1109
Télécopieur: 418-496-3803

IQALUIT WWTP UPGRADE

DRAWING FOR APPROVAL

Ingineer : NUNAMI STANTEC

DRAWING #: AD-027R2

Section	:	22 07 20	23 07 19	23 07 13
Article	:	2.2,2.4,2.5	2.2,2.4,2.6	2.2 2.3 2.4
Plans	:	ALL		
Application	:	Insulation	Plumbing	Heating D
Brand	:	Johns Manville	Certainteed	3M Venture tape
Model	:			
Revised #	:	1		
Supplyer	:	Hd Nunavik		

Pages incl. : 12
Date : **2018-08-22**
By : **Mécanique Nordique Inc.**

STANTEC PROJECT #: 110126045

SUBMITTAL # AD-027R2

This review by Stantec is for general conformance with the design concept of Stantec's design of the:

☐ Architectural ☐ Structural ☑ Mechanical ☐ Electrical ☐ Other

Stantec

component(s) only and does not mean that Stantec has verified or approves the shop drawing(s). The Contractor remains solely responsible for the shop drawing(s) and this review by Stantec does not relieve the Contractor of the Contractor's responsibility for errors or omissions in the shop drawing(s) or for meeting all requirements of the contract documents. This review does not mean that Stantec approves the detailed design inherent in the shop drawing, responsibility for which shall remain with the Contractor submitting same, nor does this review mean that Stantec accepts any deviation of the shop drawing(s) from the contract documents. The Contractor is responsible for confirming all dimensions and correlating them at the job site, for all construction means, methods and techniques, and for coordination of construction work of all trades, including coordination of all shop drawings.

☐ REVIEWED
☑ REVIEWED, AS NOTED
☐ REVISE AND RESUBMIT
☐ NOT REVIEWED

DATE 2018-08-27

BY Brendan Zrum, P.Eng

Johns Manville

Micro-Lok®

Fiber Glass Pipe Insulation

Description

Micro-Lok fiber glass pipe insulation is made from glass fibers bonded with a thermosetting resin and produced in 36" (0.92 m) lengths. Jacketed with a reinforced vapor retarder facing and a factory-applied, longitudinal acrylic adhesive closure system, Micro-Lok is designed for application temperatures from 0°F to 850°F (-18°C to 454°C). Section joints are sealed with butt strips which are supplied from the factory. **Micro-Lok AP-T Plus** may be painted with a latex paint after installation.

The factory-installed tape system permits installation at ambient temperatures down to 15°F (-9°C), and will not soften or separate when exposed to high ambient temperatures and humidity.

Uses

Micro-Lok fiber glass pipe insulation is suitable for installation over hot, cold, concealed and exposed piping systems with operating temperatures up to 850°F (454°C). Weather-protective jacketing is required for outdoor applications. Pipes operating below ambient temperatures require all joints to be sealed with the factory-applied, self-seal lap and butt strips.

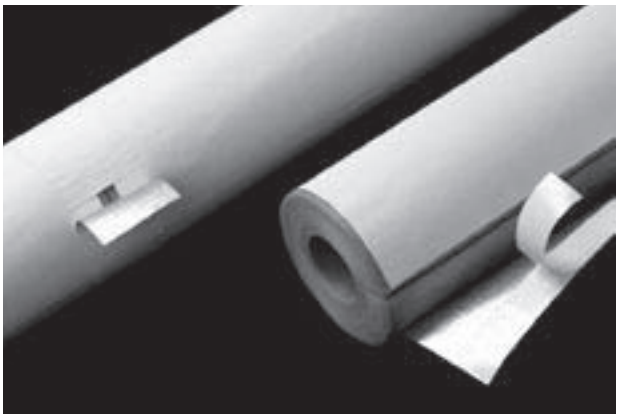

Operating Temperature Limits: 0°F to 850°F (-18°C to 454°C)

Specification Compliance

ASTM C 1136 (Jacketing) (Replaces HH-B-100B, Type I & II)
ASTM C 547 Type I (Replaces HH-I-558B, Form D, Type III, Class 12, Class 13 up to 850°F [454°C])
MIL-I-22344C
New York City MEA # 330-85-M
NFPA 90A & 90B, FHC 25/50

Physical Properties

Service Temp. Range	0°F to 850°F (-18°C to 454°C)
Moisture Sorption	<0.2% by volume
Alkalinity	<0.6% expressed as Na_2O
Corrosivity	Does not accelerate
Capillarity	Negligible (after 24 hours)
Shrinkage	None
Fungi & Bacteria Resistance	Does not breed or promote
Surface Burning Characteristics	Composite FHC 25/50 per ASTM E 84, UL 723, NFPA 255, CAN/ULC S102-M88
Limited Combustibility	NFPA 259
Jacketing	ASTM C 1136 (Type I)
Water Vapor Permeance (ASTM E 96 - Procedure A)	.02 perms max.
Beach Puncture (ASTM D 781)	50 oz. in./in. (58 SI) tear min.
Tensile Strength (ASTM D 828)	45 lbs./in. (7.9N/mm) width min. (MD) 30 lbs./in. (5.23N/mm) width min. (CD)

Thermal Conductivity ("k")

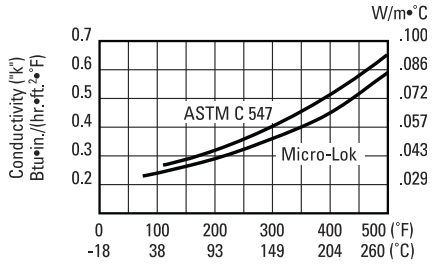

Mean Temperature	°F	75	100	200	300	400	500
	°C	24	38	200	149	204	260
Btu•in/(hr•ft²•°F)		.23	.24	.29	.36	.45	.59
W/m•°C		.033	.035	.042	.052	.065	.085

ASTM Test Methods & Guidelines

C 356.....Linear Shrinkage
C 411.....Hot Surface Performance
C 547.....Pipe Insulation
C 585.....Simplified Dimensional Standards for Nesting [Except $^3/_4$" (20 mm) IPS, 1" (25 mm) IPS, and $1^5/_8$" (41mm) CT]
C 1136.....Vapor Barrier Jacketing (Type I)

Micro-Lok®

Fiber Glass Pipe Insulation

22 07 20 2.2

23 07 19 2.2

Size Availability

Insulation Thickness		Iron Pipe Size Range		Copper Tubing Size Range	
in.	mm	in.	mm	in.	mm
1/2	13	1/2 - 18	13 - 457	5/8 -12 1/8	16 - 308
1	25	1/2 - 18	13 - 457	5/8 -12 1/8	16 - 308
1 1/2	38	1/2 - 18	13 - 457	5/8 -12 1/8	16 - 308
2	51	1/2 - 18	13 - 457	5/8 -12 1/8	16 - 308
2 1/2*	64	1/2 - 18	13 - 457	5/8 -12 1/8	16 - 308
3*	76	1/2 - 18	13 - 457	5/8 -12 1/8	16 - 308

* Contact the nearest Regional Sales Office for availability.

Qualifications for use

A sufficient thickness of insulation must be used to keep the maximum surface temperature of Micro-Lok AP-T Plus below 150°F (66°C). In addition, at operating temperatures above 500°F (260°C), Micro-Lok pipe insulation must be applied in a thickness ranging from 2" (51 mm) minimum to 6" (152 mm) maximum.

During initial heat-up to operating temperatures above 350°F (177°C), an acrid odor and some smoke may be given off as the organic binders used in the fiber glass pipe insulation begin to decompose. When this occurs, caution should be exercised to ventilate the area well. This loss of binder does not directly affect the thermal performance of the pipe insulation, but the compressive strength and resiliency of the product are reduced. For applications with excessive physical abuse or vibration at high temperatures, consult your local Performance Materials Division territory manager for alternate material recommendations.

Application Recommendations.
AP-T Plus Jacket and Butt Strips.

1. Do not apply Micro-Lok insulation with AP-T Plus jacketing if air temperature is below 15°F (-9°C) or above 130°F (54°C) due to the effect of temperature on tape performance. We recommend stapling when application falls outside this temperature range.

2. If stored below 15°F (-9°C) or above 130°F (54°C), insulation cartons should stand within the recommended temperature range for 24 hours prior to application.

3. Once release paper is removed, both adhesive and lap must be kept free of dirt and water, and the lap sealed immediately.

4. When adhered, the lap and butt strips must be pressurized by rubbing firmly with a plastic squeegee or the back of a knife blade to assure positive closure.

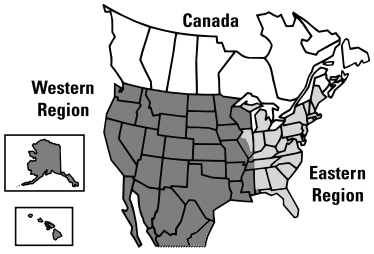

North American Sales Offices, Performance Materials Division

Eastern Region
P.O. Box 158
Defiance, OH 43512
(800) 334-2399
Fax: (419) 784-7866

Western Region and Canada
P.O. Box 5108
Denver, CO 80217
(800) 368-4431
Fax: (303) 978-4661

Outside North America
(303) 978-4655
Fax: (303) 978-2627

Johns Manville

Performance Materials Division
P.O. Box 5108
Denver, CO 80217-5108
www.jm.com

The physical and chemical properties of Micro-Lok® fiber glass pipe insulation represent typical, average values obtained in accordance with accepted test methods and are subject to normal manufacturing variations. They are supplied as a technical service and are subject to change without notice. Numerical flame spread and smoke developed ratings are not intended to reflect hazards presented by this or any other materials under actual fire conditions. Check with the Regional Sales Office nearest you to assure current information. **All Johns Manville products are sold subject to Johns Manville's Limited Warranty and Limitation of Remedy. For a copy of the Johns Manville Limited Warranty and Limitation of Remedy, call the 800 number below.** For information on other Johns Manville thermal insulations and systems and a copy of the Spec-Line® CSI formatted specification, call **1-800-654-3103**.

CI-34 1-05 (Replaces 5-04)

Copyright ©2005 Johns Manville
Printed in USA

Johns Manville

Zeston 2000® Series White PVC Insulated Fitting Covers and Jacketing

Features

- Protect insulated or bare pipes
- Meets most requirements for federal, state and local fire-safety codes
- Accepted for commercial, institutional, industrial and residential projects in all parts of the US
- System is uncomplicated and easy to install
- UV-resistant for outdoor applications
- Long-lasting protection and an attractive finished appearance
- Available with Hi-Lo Temp fiber glass inserts

Applications

- Commercial, institutional and industrial applications

Construction

- Covering and jacketing manufactured from high-impact, gloss white, UV-resistant polyvinyl chloride jacketing

Application Recommendations

- Wrap the Hi-Lo Temp fiber glass insert completely around the pipe fitting without overly compressing it or leaving any voids
- Ensure that the insulation insert covers all exposed surfaces
- Install the Zeston PVC fitting cover over the pipe fitting and fiber glass insert by securing the throat of the Zeston PVC insert using either serrated tacks, Perma-Weld adhesive or Zeston Z-Tape
- If applied in an outdoor setting or exposed to the sun, precautions should be taken to account for expansion joints



ZESTON 2000 SERIES WHITE PVC
INSULATED FITTING COVERS AND JACKETING

22 07 20 2.4
23 07 19 2.6

Johns Manville

Mechanical Insulations

Zeston 2000® Series White PVC Insulated Fitting Covers and Jacketing

Qualifications For Use

Hot Systems

- Use proper insulation thickness to ensure PVC covers are kept below 150°F (66°C)
- PVC covers should be kept away from contact with and/or exposure to sources of direct or radiated heat
- For fittings where operating temperatures exceed 250°F (121°C) or where pipe insulation thickness is greater than 1½" (38mm), two or more layers of Hi-Lo Temp insulation inserts are required beneath the fitting cover (refer to MECH-261 Zeston Hi-Lo Temp Inserts)

Cold Systems

- An approved vapor-barrier compatible with PVC must be applied between pipe insulation and fitting cover and on fitting cover throat overlap seal. Please refer to Insulspec MECH-261 on jm.com
- For fittings where operating temperature is below 45°F (7°C) or where the pipe insulation thickness is greater than 1½ " (38mm), two or more layers of Hi-Lo Temp insulation inserts are required beneath fitting cover (refer to MECH-261 Zeston Hi-Lo Temp Inserts)

Refrigerant Systems and Cold Systems In Severe Ambient Conditioning

- Mitered pipe insulation segments, fabricated or pre-molded insulation shapes may be used in lieu of Hi-Lo temp insulation inserts
- An intermediate vapor-barrier compatible with PVC is required to completely seaL the insulation prior to installing the Zeston 2000 PVC fitting cover
- Care should be taken to ensure the vapor barrier mastic is applied between the pipe insulation and the fitting cover and on the fitting cover throat overlap seam

Totally Sealed Systems (USDA Approval)

- 20 or 30 mil (0.5 mm or 0.8mm) Zeston PVC jacketing should be applied to pipe insulation in conjunction with Zeston PVC fitting covers
- Circumferential and longitudinal jacket and fitting cover seams should be sealed with Zeston Perma-Weld solvent welding adhesive
- Circumferential seams should be a minimum of 1" (25mm) overlap and longitudinal seams should be 1½"- 2" (38mm to 51mm) overlap
- Upon completion, all seams should visually be checked for seal and, if necessary, touched up
- Slip joints are periodically required between fixed supports and on continuous long runs of straight piping.
- To implement a slip joint, increase the circumferential overlap to 8" to 10" (203 mm to 254 mm) and apply a flexible white caulking in the overlap area to maintain a sealed system
- Refer to Zeston installation instructions CI-35 at www.jm.com

Performance Specifications

Electrical Conductance	Non-conductor
Elongation at Yield (MD), %	3.0
Flame Spread	25 or less (up to 30 mil [0.8mm])
Flexural Modulus, psi (kPa)	430,000 (2,964,750)
Flexural Strength, psi (kPa)	11,000 (75,850)
Gardner – SPI Impact, in.lb./mil by Ductile Failure	10 mil (0.3 mm)1.3 15 mil (0.4 mm) 1.4 20 mil (0.5 mm) 1.5 30 mil (0.8 mm) 1.6
Smoke Developed	50 or less (up to 30 mil [0.8 mm])
Specific Gravity	1.48
Tensile Modulus, psi (kPa)	425,000 (2,930,270)
Tensile Strength at Yield, psi (kPa)	6,000 (41,370)

Specification Compliance

ASTM	D257 (Electrical surface resistance)
	D638 (Tensile strength)
	D790 (Flexural Strength)
	D792 (Density & specific gravity)
	D1784 (Specification for rigid PVC)
	D3679 (Specification for rigid PVC)
	E84 (Surface burning characteristics)
	E136 25/50 non-combustibility (fiber glass inserts)
Agriculture Canada	Pass (Canada Department of Agriculture)
Canada	CGSB51-GP-53M
CAN/ULC	S102
L-P*: Composition	535E (Federal standard for PVC)
A, Type II, Grade GU	1035A (US Army standard PVC)
New York City MEA	#7-87 (Toxicity test)
USDA	US Department of Agriculture

Compressed Thermal Conductivity Zeston Hi-Lo Temp Insulation Inserts

Mean Temperature		"K"	
°F	°C	BTU•in/(hr•ft²•°F)	W/M•°C
75	24	0.23	0.033
150	66	0.27	0.039
300	149	0.40	0.058

FOR ADDITIONAL INFORMATION CONSULT THE FULL PRODUCT MANUAL.

The physical and chemical properties of PRODUCT listed herein represent typical, average values obtained in accordance with accepted test methods and are subject to normal manufacturing variations. They are supplied as technical service and are subject to change without notice. Numerical flame spread and smoke developed ratings are not intended to reflect hazards presented by these or any other materials under actual fire conditions. Check with the Regional Sales Office nearest you to assure current information. **All Johns Manville products are sold subject to Johns Manville's standard Terms and Conditions including Limited Warranty and Limitation of Remedy. For a copy of the Johns Manville standard Terms and Conditions, Limited warranty and Limitation of Remedy, and information on other Johns Manville thermal insulations and systems, call (800)-654-3103Limited Warranty and Limitation Remedy. For a copy of the Johns Manville standard Terms and Conditions, Limited Warranty and Limitation of Remedy, and information on other Johns Manville thermal insulations and systems, call (800) 654-3103.**

22 07 20 2.4

23 07 19 2.6

PROTO FITTING COVERS

25/50 RATED
PER ASTM E-84 — LoSMOKE® PVC

SUBMITTAL SHEET

Effective: 05/01/07

Submitted Date: _____

PROTO REGULAR PVC
LoSMOKE® PVC JACKETING

PROTO CORP.
10500 47th Street North
Clearwater, FL 33762-5017
Tel: (727) 573-4665
Fax: (727) 572-6823
Toll Free (800) 875-7768

PVC FITTING COVERS, PRE-MOLDED, INSULATED
WHITE GLOSS FINISH — INDOOR OUTDOOR GRADE

SUBMITTAL SHEET DOES NOT SUPERCEDE WRITTEN SPECIFICATIONS OR OWNER AGREEMENT.

DESCRIPTION

The Proto Fitting Cover System consists of one piece and two piece pre-molded high impact LoSMOKE® PVC fitting covers with fiberglass inserts and accessories, which include elbows, tee/valves, end caps, mechanical line couplings, specialty fittings, white and indoor color jacketing, Protop® Tank End Panels, tack fasteners, tapes and specialty items.

APPLICATIONS

The Proto Fitting Cover System is used to insulate mechanical piping systems at fitting locations and provide a PVC jacketing for straight run piping. Both give a quality appearance and have excellent durability.

FEATURES AND BENEFITS

25/50 Rated. All Proto PVC Fittings are made of LoSMOKE® grade PVC. Roll Jacketing is available in either 25/50 rated or regular PVC Grade (not 25/50 rated). The 25/50 products meet fire and smoke safety requirements of federal, state and local building codes.

Excellent Appearance. Bright high-gloss white coloring adds a distinct quality appearance to the system. The standard line of Proto Fitting Covers are made in LoSMOKE® PVC designed for indoor and outdoor use. Virtually all sizes pass 25/50 when made of LoSMOKE® PVC. Colored PVC is manufactured from a LoSMOKE® formula that is suitable for indoor use only.

Easy To Clean. Due to the smooth, high gloss finish on Proto PVC Fittings, the product cleans easily with soap and water. This makes the system ideal for food and drug facilities.

Low Cost Installation. Significant cost savings vs. conventional cement, molded sections, and mitered sections.

Fast and Easy. At fitting locations, wrap the fiberglass insert around the pipe fitting, apply the Proto PVC Fitting over the insert and tack or tape in place. Do not use tacks where a vapor retarder is applied.

Wide Temperature Range. May be used for mechanical piping systems operating from -20°F to +140°F surface temperature of insulation. Variety: LoSMOKE®, Indoor/Outdoor, Exod®, Exotuff®. Proto products are also available in LoSMOKE® Indoor colors. Exod® is CPVC, GOOD TO 225° F.

Long Lasting. Can be used more than once on retrofit projects, general maintenance.

Excellent Thermal Value. K value of .26 at 75°F (.037 W/m °C at 24°C) of fiberglass insert, mean temperature assures better thermal efficiency than conventional cement fittings.

Resistance To Fungi and Bacteria. (ASTM G 21, ASTM G 22) Does not promote growth of fungi or bacteria.

U.V. Resistant. Can be used on indoor or outdoor applications, for both (White) LoSMOKE® PVC and Regular PVC. Extra thick fitting covers should be used outdoors. (All Std. Proto Fitting covers are made of LoSMOKE® PVC.)

TECHNICAL PHYSICAL PROPERTIES OF PVC LoSMOKE® MATERIALS

Specific Gravity (ASTM D-792) 1.41
Tensile Modulus, PSI (ASTM D-638) . . . . . .361,000 (25,380 kg/cm²)
Tensile Strength, PSI (ASTM D-638) 6,011
Flexural Strength, PSI (ASTM D-790) 9,396
Izod Impact (1/4") ft. lb./in (ASTM D-256) 3.7
Heat Deflection Temp. (ASTM D-648) . . . . . .157°F (70°C)
at 264 PSI (8.95 kg/cm²), °F
VICAT Softening Temp. (ASTM D-1525) . . . . . .198°F (92°C)

Water Vapor Transmission
ASTM E 96-95
70°F & 50% Relative Humidity
.015" thick = .058
.020" thick = .047
.030" thick = .027

Surface Burning Characteristics of All Fitting Covers and Jacketing
LoSMOKE® PVC . . . . . .passes 25/50 ASTM-E 84
Up to .035" Thk.
Puncture Resistance (ASTM D 781) . . .006" thick = 178 Beach Units
.015" thick = 221 Beach Units

FEDERAL SPECIFICATIONS COMPLIANCE—

POLY VINYL CHLORIDE — ASTM 1784-92

LP-1035A Type II Grade GU and Type III

LP-535E Type II Grade GU and Type III

United States Department of Agriculture Authorized
Agriculture Canada Authorized
New York City MEA 243-84-M, Chicago, Los Angeles ASTM C-585-76 (sizes)
Canada CAN/CGSB - 51.53-95

TECHNICAL PROPERTIES OF FIBERGLASS INSERT MATERIAL

Thermal Conductivity (ASTM C 177)

Mean Temperature –	°F	"k" — BTU in/hr. Ft.2 °F
HH-I-558 Form B	75° 1(24°C)	.26 (.037 W/m. °C)
Type 1 Class B	150° 1(66°C)	.33 (.048 W/m. °C)
	250° (121°C)	.44 (.063 W/m. °C)

APPLICATION AND SPECIFICATION GUIDELINES

A. STORAGE

Protect cartons from water damage or other abuse. Proto Fitting Cover cartons are not designed for outside storage.

B. PREPARATION

Proto Fitting Covers should be applied on clean, dry surfaces.

C. APPLICATION

1. **General:** The matching fiberglass insert shall be wrapped completely around the metal fitting leaving no voids. Loose wrappings of twine is helpful in shaping difficult surfaces. The Proto Fitting Cover shall then be applied over the fitting and insert, and the throat secured by either tack fastening or taping.

2. **Cold Pipe:** Fitting systems below ambient temperature must have a continuous vapor retarder or vapor retardant mastic as specified by the engineer. When using Proto PVC Tape, a 2" (51mm) minimum downward overlap is recommended for optimum performance. Care should be taken not to stretch the last 2" (51mm) of Proto PVC Tape, to avoid stretching or creeping.

3. **Hot Pipe:** Insulate as per General Instructions given above. Due to PVC softening point at approximately 159°F (70.6°C), care should be taken to ensure sufficient insulation thicknesses are applied.

For hot piping which requires Pipe Insulation over 1 1/2" (38 mm) wall thickness, an extra fiberglass insert shall be applied for each additional inch of pipe insulation wall thickness. Proto recommends the surface temperature of the Pipe Insulation and PVC to be no higher than 125°F (52°C). To complete application of Proto PVC Fittings on hot piping, the throat seam shall be tack fastened or taped. Seal all laps outdoors and in wash down areas.

CAUTION: During initial heat-up to operating temperatures above 350°F, (177°C) an acrid odor and some smoke may be given off as a portion of the bonding material used in the insulation begins to undergo a controlled decomposition. If natural convection is not adequate in confined areas, forced ventilation should be provided in order to protect against any harmful fumes and vapors that might be generated.

4. **Outdoor Pipe:** Insulate as per above instructions.

Minimum Proto PVC Jacketing thickness for outdoor applications should be .030" (.7 mm). Over 15" O.D., .040 is recommended. Under 3 1/8" O.D., .020 is permitted. The PVC Jacketing shall be overlapped a minimum of 2" (51 mm) on the down side so as to shed water. All long and round joints shall be completely weather sealed with caulk adhesive.

On all piping, insulation shall be of sufficient thickness to keep the surface temperature below 125°F (52°C). Additionally, a slip type expansion joint of 8" (202 mm) minimum width shall be applied at least every 25 lineal feet (6.1 lineal meters) and between fittings.

Painting: Painting must be done only after priming the PVC surface with a suitable primer, such as X-1-M 400W Primer, or a similar, approved product.

Outdoor Painting: Only over White Exotuff® 195°F deflection temp. (modified PVC) or EXOD™225°F deflection temp. CPVC after X-1-M primer, or a similar, approved product. Use PVC compatible paints without strong solvents. Test paint a section before proceeding.

5. **CAUTION:** Fiberglass may cause temporary skin irritation. Wear long-sleeved, loose-fitting clothing, head covering, gloves and eye protection when handling and applying material. Wash with soap and warm water after handling. Wash work clothes separately and rinse washer. A disposable mask designed for nuisance type dusts should be used where sensitivity to dust and airborne particles may cause irritation to the nose or throat.

D. HEAVY INDUSTRIAL APPLICATIONS OUTDOORS

Use .030" or higher PVC Jacketing. Use "heavy duty" two piece fitting covers made from minimum .030" thick to .050" thick PVC sheet depending on size of fitting cover. Jacketing to be cut and oven precurled

E. FIRE TEST RESULTS: PROTO LoSMOKE® — PVC

USA: E-84 25/50 Rated up to .035" thick (The Best Rated PVC)

CANADA: Conforms to CAN 4-S102.2

LoSMOKE® fitting covers conform to virtually all city, state and federal codes, for use in hotel, commercial and industrial buildings.

LoSMOKE® fitting covers will be labeled on the box "Passes ASTM E-84." Flame spread 25; smoke developed 50".

All E-84 ratings shown here were tested on flat sheets from which fitting covers are made.

Virtually all Proto LoSMOKE® fitting covers will pass E-84 25/50 flame spread and smoke development rating requirements.

SUGGESTIONS

Slide Joints: Do not apply PVC Jacketing too tightly. Slide joints plus PVC thickness must work together to prevent cracks and puckering.

Caulk/Adhesives:
Use: Celulon® (Red Devil Inc.) water base "Ultra Clear".
Service temp. -25°F to +175°F

PVC Cement: Avoid use if possible. Heavy application can cause puckering and cracks. Learn how to use it sparingly.

Vapor Retarder: A vapor retarder is required under all fitting covers for systems operating below ambient temperatures, such as chilled water lines, and is recommended for all outdoor applications. The fitting vapor retarder should provide a continuous seal with the adjacent pipe vapor retarder.

Outdoor Fitting Covers: Use extra thick, plastic heavy duty covers.

Outdoor and Indoor Washdown Areas: Use EXOD™ (CPVC) by Proto, for its higher deflection temperature (225°F). It is light grey.

PVC Outdoor Thickness (Reg. PVC Jacketing): Use .030" thick cut and oven precurled jacketing. Use "heavy duty" plastic fitting covers formed from minimum .030" to .050" thick PVC sheet depending on size of fitting cover. On pipe insulation larger than 15" O.D. use .040" thick PVC.

PVC Indoor Thickness: Use white or indoor color LoSMOKE® on piping. Use .020" thick with standard one piece fitting cover, .030" jacketing can also be used.

Vessels and Tank Tops: Use .050" or .060" thick tank panels for outdoor applications and .030" or .040" for indoor tanks. Use .050" thick Protop® segments for tank heads. (Only Proto Corp. has them.) Made of LoSMOKE® PVC.

Pipe Insulation End Caps: Use on all outdoor, indoor washdown areas, and all vapor sealed systems. End caps will be PVC, metal, or gasket materials appropriate for the metal pipe temperatures. Silicone rubber (500°F) can be applied (min. 1/16" thick) as an end cap outdoors.

Indoor hot piping need not be sealed to the end cap. Cap will be sealed or taped to the jacket.

Two-Ply Waterproofing System: Use .010" thick PVC with self-sealing long lap tape, as the first waterproof layer. Overlap ends 3" and PVC tape over. Caulk all openings with Celulon® or similar, approved product. The finished jacketing material should employ staggered joints with at least a .010 mil thick first layer. Recaulk again over last layer. Install slide joints every 25', caulk shut all other seams, openings, or end overlaps with PVC tape or caulk. Use vapor seal jacketing (instead of .010" thick PVC first layer) where a vapor seal system is required.

CPVC-High Chemical Resistance and High Deflection Temperature: Use "Exod®" CPVC jacketing and fitting covers for 225°F deflection temperature and maximum chemical resistance. Offered only by Proto Corp. as a substitute for stainless steel.

Regular PVC Jacketing Outdoors: Use regular PVC jacketing outdoors. It is less expensive, does the same job as LoSMOKE® PVC. Regular PVC has very good fire (self-extinguishing) properties — not as good as the LoSMOKE® PVC used in confined people areas (buildings), however much better than common plastics used outdoors.

Vessels with ends 24" O.D. or larger: Use .040" thick jacketing up to 48" O.D. On sides of vessels larger than 48" O.D. See Protop® brochure for instructions requiring a suspended band system, to hang panels from, (Gerrard & Company or equal). Use thick PVC panels on Outdoor Tanks not PVC Roll Jacketing. See Tank Tops above for end segments.

PROTO PVC CORP™

10500 47th Street North
Clearwater, FL 33762-5017
Tel: (727) 573-4665
Fax: (727) 572-6823
Toll Free (800) 875-7768

The physical and chemical properties of Proto Corp. PVC represent typical average values obtained in accordance with accepted test methods and are subject to normal manufacturing variations. They are supplied as a technical service and are subject to change without notice. Numerical flame spread rating is not intended to reflect hazards presented by this or any other materials under actual fire conditions. Check with Proto Corp. office to assure current information. Purchaser will be responsible to determine suitability of this product for purchaser's use. Proto Corp. liability will be limited to the purchase price of the material. No person is authorized to alter this without a Proto Corp. officer's written approval.

23 07 13 2.2

Specification Sheet

CertainTeed
SAINT-GOBAIN

CertaPro™ Commercial Board

1. PRODUCT NAME

CertaPro™ Commercial Board

2. MANUFACTURER

CertainTeed Corporation
P.O. Box 860
Valley Forge, PA 19482-0105
Phone: 610-341-7000
800-233-8990
Fax: 610-341-7571
Website:
www.certainteed.com/insulation

3. PRODUCT DESCRIPTION

Basic Use: CertaPro Commercial Board is used where board stiffness properties are required and also functions as an exterior insulation when covered with a weather barrier. Commercial Board is used in exterior curtain walls, interior walls and floor/ceiling assemblies, and as an exterior insulation on HVAC ducts and plenums or in constructions where framing is not present. It is also used as thermal insulation on tanks and vessels.

AVAILABLE SIZES/THERMAL PERFORMANCE

Product Type	Thickness		Density		Thermal Resistance		Thermal Conductivity	
	in.	mm	Lb/ft³	Kg/m³	R	RSI	Btu•in / h•ft²•°F	W / m•°C
CB 110	1-1/2	38	1.1	17.57	6.0	1.06	0.25	0.036
	3-1/2	89	1.1	17.57	14.0	2.47	0.25	0.036
	6	153	1.1	17.57	25.0	4.20	0.25	0.036
CB150	1-1/2	38	1.50	24	6.0	1.06	0.25	0.036
	2	51	1.50	24	8.0	1.41	0.25	0.036
	2-1/2	64	1.50	24	10.0	1.76	0.25	0.036
	3	76	1.50	24	12.0	2.11	0.25	0.036
	3-1/2	89	1.50	24	14.0	2.47	0.25	0.036
	4	102	1.50	24	16.0	2.82	0.25	0.036
CB180	1-1/2	38	1.50	24	6.0	1.06	0.24	0.035
	2	51	1.50	24	8.0	1.41	0.24	0.035
	2-1/2	64	1.50	24	10.0	1.76	0.24	0.035
	3	76	1.50	24	12.0	2.11	0.24	0.035
	3-1/2	89	1.50	24	14.0	2.47	0.24	0.035
	4	102	1.50	24	16.0	2.82	0.24	0.035
CB 225	1	25	2.25	36	4.2	0.73	0.24	0.035
	1-1/2	38	2.25	36	6.3	1.10	0.24	0.035
	2	51	2.25	36	8.3	1.47	0.24	0.035
	2-1/2	64	2.25	36	10.4	1.83	0.24	0.035
	3	76	2.25	36	12.5	2.19	0.24	0.035
	3-1/2	89	2.25	36	14.6	2.56	0.24	0.035
	4	102	2.25	36	16.6	2.91	0.24	0.035
CB 250	1	25	2.50	40	4.2	0.73	0.24	0.035
	2	51	2.50	40	8.3	1.47	0.24	0.035
CB 300	1	25	3.00	48	4.3	0.77	0.23	0.033
	1-1/2	38	3.00	48	6.5	1.15	0.23	0.033
	2	51	3.00	48	8.7	1.53	0.23	0.033
	2-1/2	64	3.00	48	10.9	1.92	0.23	0.033
	3	76	3.00	48	13.0	2.30	0.23	0.033
	3-1/2	89	3.00	48	15.2	2.68	0.23	0.033
	4	102	3.00	48	17.4	3.06	0.23	0.033
CB 450	1	25	4.50	72	4.5	0.80	0.22	0.032
	2	51	4.50	72	9.1	1.60	0.22	0.032
CB 600	1	25	6.00	96	4.5	0.80	0.22	0.032
	1-1/2	38	6.00	96	6.8	1.20	0.22	0.032
	2	51	6.00	96	9.1	1.60	0.22	0.032

All/Service/Jacket (ASJ facing) is not available in Type CB 150.
CB 110, 150 and 600 are not available in FSK, WMP or ASJ facings.

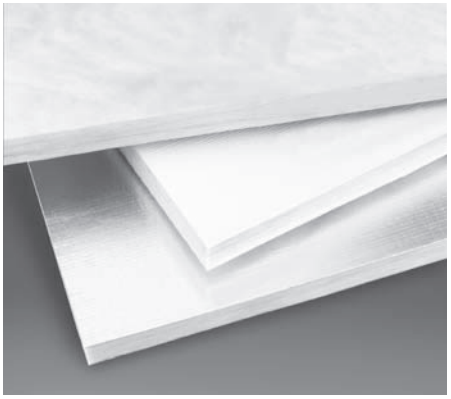

Benefits: CertaPro Commercial Board provides high sound absorption and excellent thermal performance. This product contains a minimum of 60% recycled content. The product is offered in a variety of stiffness properties from flexible to rigid and all can be easily cut, handled, fabricated and installed. The vapor retarder facing provides abuse resistance. The ASJ and FSK facings provide vapor retarder performance and a Class A surface that may be left exposed.

Composition and Materials: The product is composed of glass fibers bonded together with a thermoset binder. It is available unfaced or with a foil-scrim-kraft (FSK) or white kraft-scrim-foil (ASJ) facing adhered to the fiber glass board.

Limitations: Insulation should be kept clean and dry at all times.

Sizes: See table to the left. Contact CertainTeed for other sizes and minimum order quantities.

4. TECHNICAL DATA

Applicable Standards

- Model Building Codes:
  - ICC
  - New York City
    MEA 35-79-M
  - California Quality Standards
    Reg. No. CA-T024 (PA)
  - City of Los Angeles, RR 8148
- Material Standards:
  - CAN/ULC S-702, Type I
  - ASTM C553
    CB 150, Type I, II & III
  - ASTM C612
    CB 150 & CB 225, Type IA
    CB 300 & CB 600, Types IA & IB
  - CAN/CGSB-51.10-92
    CB 150 & CB 225, Type II, Class II
    CB 300 & CB 600, Type I, Class II

Fire Resistance:

- Fire Hazard Classification:
  - ASTM E84, UL 723

23 07 13 2.2

– CAN/ULC-S102
Max. Flame Spread Index: 25
Max Smoke Developed Index: 50
- Limited Combustible:
  – NFPA 259
  ≤ 3,500 Btu/lb

Physical/Chemical Properties:

- Thermal Performance:
  – ASTM C177 or ASTM C518
  See table at left
- Acoustical Performance:
  – ASTM C423
  See table on other side
- Operating Limits:
  – Temperature (ASTM C411):
  Max. 250°F (121°C) (Faced)
  Max. 450°F (232°C) (Unfaced)
- Water Vapor Permeance:
  – ASTM E96, Dessicant Method
  Max. 0.02 perms
  (1.15 x 10^{-9} g/Pa•s•m^2)
  (ASJ and FSK Facing)
- Water Vapor Sorption:
  – ASTM C1104
  ≤ 5% by weight
- Corrosiveness (ASTM C665):
  – Pass
- Fungi Resistance (ASTM C1338):
  – Pass
- Odor Emission (ASTM C1304):
  – Pass

5. INSTALLATION

Exterior Walls – The faced side of the board should be installed toward the interior side of the structure, except in warm and humid areas where local code regulations may require a vapor retarder to face toward the exterior.

ACOUSTICAL PERFORMANCE

Type	Thickness		Absorption Coefficients @ Octave Band Frequency (Hz)						NRC
	in	mm	125	250	500	1000	2000	4000	
CB 110	1-1/2	38	0.25	0.51	0.85	0.97	1.00	1.03	0.85
	3-1/2	89	0.55	1.15	1.29	1.18	1.14	1.18	1.20
	6	153	1.09	1.45	1.26	1.13	1.11	1.10	1.25
CB 150	1-1/2	38	0.19	0.51	0.82	0.86	0.95	0.97	0.80
	2	51	0.23	0.61	0.94	0.97	0.98	0.96	0.90
	2-1/2	64	0.41	0.78	0.96	0.94	0.93	0.97	0.90
	3	76	0.41	0.94	1.07	1.01	1.00	0.97	1.00
	3-1/2	89	0.60	1.08	1.09	1.02	1.04	1.06	1.05
	4	102	0.64	1.05	1.07	0.97	0.96	1.01	1.00
CB 180	2-1/2	64	0.41	0.89	1.22	1.24	1.16	1.18	1.15
CB 225	1	25	0.06	0.30	0.68	0.85	0.91	0.94	0.70
	1-1/2	38	0.12	0.48	0.83	0.90	0.90	0.89	0.80
	2	51	0.22	0.63	1.04	1.00	1.00	0.97	0.90
	2-1/2	64	0.31*	0.81*	1.08*	1.02*	1.04*	1.03*	1.00*
	3	76	0.34	0.95	1.08	0.99	0.98	0.99	1.00
	3-1/2	89	0.54	1.11	1.12	1.01	1.02	1.00	1.05
	4	102	0.70	1.15	1.12	0.99	1.01	1.08	1.05
CB 250	1	25	0.05	0.25	0.66	0.98	1.04	1.07	0.75
	2	51	0.21	0.79	1.21	1.14	1.09	1.07	1.05
CB 300	1	25	0.08	0.25	0.72	0.88	0.93	0.94	0.70
	1-1/2	38	0.10	0.51	0.89	0.95	0.92	0.93	0.80
	2	51	0.21	0.73	1.08	1.04	1.04	0.96	0.95
	2-1/2	64	0.31	0.81	1.08	1.02	1.04	1.03	1.00
	3	76	0.41	0.96	1.13	1.03	1.03	1.02	1.05
	3-1/2	89	0.72	1.14	1.11	1.00	1.02	1.00	1.05
	4	102	0.75	1.18	1.09	1.00	1.00	1.02	1.05
CB 450	1	25	0.09	0.33	0.79	1.06	1.07	1.06	0.80
	2	51	0.32	0.95	1.19	1.11	1.04	1.02	1.05
CB 600	1	25	0.05	0.27	0.78	0.97	0.97	0.91	0.75
	1-1/2	38	0.17	0.50	0.98	1.03	0.99	0.98	0.90
	2	51	0.31	0.89	1.07	0.99	1.02	0.98	1.00

* Estimated sound absorption coefficents and NRC.
Sound absorption tested in accordance with ASTM C423 using Type A mounting per ASTM E795.

Curtain Walls – CertaPro Commercial Board is applied to spandrel and pre-cast concrete panels with approved adhesives or mechanical fasteners. Boards may also be installed using hat channels or Z studs. Where a vapor retarder is required, all joints, seams and penetrations must be sealed. Exterior applications require the insulation to be covered with appropriate weather barrier finish in addition to the factory-applied vapor retarder facing. Choice of finish depends on mechanical abuse, weather exposure and appearance requirements.

HVAC/Mechanical – All fabrication, application and installation steps should be in accordance with the requirements of the National Commercial and Industrial Installation Standards (current edition) published by the Midwest Insulation Contractors Association (MICA).

These installation recommendations are general in nature. Other methods are acceptable. Please consult your contractor for recommendations best suited to the application.

6. AVAILABILITY AND COST

Manufactured and sold throughout the United States and Canada. For availability and cost, contact your local contractor, distributor or call CertainTeed at 800-233-8990.

7. WARRANTY

Refer to CertainTeed Limited Warranty for Commercial Insulation (30-25-034). Inasmuch as CertainTeed has no control over the installation design, installation workmanship, accessory materials or conditions of application, CertainTeed does not warrant the performance or results of any installation containing its products.

8. MAINTENANCE

An inspection and preventative maintenance program for the insulation and vapor retarder system is recommended to ensure optimum performance.

9. TECHNICAL SERVICES

Technical assistance can be obtained either from the local CertainTeed sales representative, or by calling Sales Support Group at 800-233-8990.

10. FILING SYSTEMS

- CertainTeed Pub. No. 30-25-056
- Additional product information available upon request.

Seal and Insulate with ENERGY STAR — LEARN MORE AT energystar.gov

NAIMA

GREENGUARD Children & Schools — Indoor Air Quality Certified

U.S. GREEN BUILDING COUNCIL MEMBER

ENERGY STAR AWARD 2010 — PARTNER OF THE YEAR

ASK ABOUT OUR OTHER CERTAINTEED PRODUCTS AND SYSTEMS:

EXTERIOR: ROOFING • SIDING • WINDOWS • FENCE • RAILING • TRIM • DECKING • FOUNDATIONS • PIPE
INTERIOR: INSULATION • GYPSUM • CEILINGS

CertainTeed Corporation
P.O. Box 860
Valley Forge, PA 19482

Professional: 800-233-8990
Consumer: 800-782-8777
www.certainteed.com/insulation

CertainTeed SAINT-GOBAIN

Code No. 30-25-021, © 05/10 CertainTeed Corporation.

23 07 13 2.3

sustainable insulation

Specification Sheet

Acceptable where specifications allow type C2 insulation

CertainTeed
SAINT-GOBAIN

SoftTouch™ Duct Wrap Insulation

Product Name	CertainTeed SoftTouch™ Duct Wrap Insulation
Manufacturer	CertainTeed Corporation
Address	P.O. Box 860 Valley Forge, PA 19482-0105
Phone	610-341-7000 • 800-233-8990
Fax	610-341-7571
Website	www.certainteed.com/insulation

PRODUCT DESCRIPTION



Basic Use: SoftTouch™ Duct Wrap Insulation is used to insulate rectangular and round heating, ventilating and air conditioning ductwork.

Benefits: SoftTouch Duct Wrap Insulation provides thermal efficiency that reduces unwanted heat loss or gain from equipment and ductwork. When properly installed in the correct thickness, this product virtually eliminates condensation problems on cold duct surfaces.

Composition and Materials: SoftTouch Duct Wrap is a blanket-type insulation composed of tan, uniformly textured, inorganic fibrous glass formed with a formaldehyde-free plant-based binding agent. It is available unfaced or with FSK, gray PSK or white PSK vapor retarder facing. On faced products, a stapling/taping tab is provided on one edge.

Limitations: The product should be kept clean and dry from the time of manufacture through job site installation and system operation.

SoftTouch Duct Wrap is suitable for use with most heating, ventilating and air conditioning ductwork operating at temperatures from 35°F to 250°F (1.7°C to 121°C) for faced SoftTouch Duct Wrap, and from 35°F to 450°F (1.7°C to 232°C) for unfaced SoftTouch Duct Wrap.

Sizes: See table on back for available sizes. Contact CertainTeed for other sizes and minimum order quantities.

INSTALLATION

Sheet metal ducts must be clean, dry and sealed tightly prior to insulating with CertainTeed SoftTouch Duct Wrap.

To ensure installed thermal performance, CertainTeed SoftTouch Duct Wrap must be cut to "stretch-out" dimensions. This requires measurement of the duct perimeter, then cutting the duct wrap to the dimensions (perimeter + add-on) indicated in the stretch-out table on the other side. A 2" piece of insulation is removed from the facing at the end of the piece of insulation to form an overlapping stapling and taping flap.

CertainTeed SoftTouch Duct Wrap is installed by wrapping the insulation around the perimeter of the duct with the facing out. Adjacent sections of duct wrap are tightly butted with the 2" taping flap overlapping. Seams must be stapled with outward-clinching staples on approximately 6" centers. When a vapor retarder is required, all seams, joints, tears, punctures and/or other penetrations of the duct wrap must be sealed with a pressure sensitive vapor retarder tape that matches the facing, or a suitable mastic system.

Where rectangular ducts are 24" in width or greater, CertainTeed SoftTouch Duct Wrap must be additionally secured to the bottom of the duct with mechanical fasteners spaced 18" on center to prevent sagging.

For additional installation details, consult the National Commercial and Industrial Insulation Standards (current edition) published by the Midwest Insulation Contractors Association (MICA).

AVAILABILITY AND COST

Manufactured in U.S.A. Available in select Western U.S./Canada regions. For availability and cost contact your local distributor, or call CertainTeed Sales Support Group in Valley Forge, PA at 800-233-8990.

WARRANTY

Refer to CertainTeed's Limited One-Year Warranty for Fiber Glass Duct Wraps (30-29-047).

MAINTENANCE

An inspection and preventative maintenance program for the HVAC system is recommended to ensure optimum performance.

TECHNICAL DATA

Applicable Standards

- Model Building Codes:
  – ICC
- Material Standards:
  – ASTM C1290
    Type I, Unfaced
    Type II, PSK – Grey
    Type III, FSK & PSK – White
  – ASTM C553
    Type I, Type 75 Duct Wrap
    Type II, Type 100 & 150 Duct Wrap
    Type III, Type 150 Duct Wrap
  – CAN/CGSB-51.11-92
  – ASTM C1136: FSK & White PSK, Type II, Gray PSK, Type IV
- Fire Safety Standards:
  – NFPA 90A, NFPA 90B

Fire Resistance

- Fire Hazard Classification:
  – UL 723, ASTM E84, CAN/ULC-S102
    Max. Flame Spread Index: 25
    Max. Smoke Developed Index: 50
- Non-Combustible: ASTM E136 / Meets test requirements

Physical/Chemical Properties

- Thermal Performance: See table on other side
- Operating Limits:
  – Temperature: ASTM C411
    Faced: Max. 250°F / 121°C
    Unfaced: Max. 450°F / 232°C
- Water Vapor Sorption: ASTM C1104 / < 5% by weight
- Water Vapor Transmission – Facing:
  – ASTM E96, Desiccant Method
    FSK and white PSK: Max. 0.02 perms (1.15×10^{-9} g/Pa•s•m²)
    Gray PSK: Max. 0.09 perms (5.17×10^{-9} g/Pa•s•m²)
- Corrosiveness: ASTM C665
  – Pass test requirements
- Fungi Resistance: ASTM C1338
  – Pass test requirements
- Odor Emission: ASTM C1304
  – Pass test requirements

Quality Assurance

CertainTeed's commitment to quality and environmental management has ensured the registration of the Athens, Chowchilla and Kansas City plants to ISO 9001:2000 and ISO 14001:2004 standards. The GREENGUARD® Environmental Institute has certified SoftTouch Duct Wrap Insulation for low emissions of total particle, formaldehyde and other Volatile Organic Compounds (VOCs).

TECHNICAL SERVICES

Technical assistance can be obtained either from your local CertainTeed sales representative, or by calling CertainTeed Sales Support Group in Valley Forge, PA at 800-233-8990.

FILING SYSTEMS

- CertainTeed Pub. No. 30-36-081
- Sweet's Catalog Files, 230700
- Additional product information available upon request.

CONDENSATION CONTROL

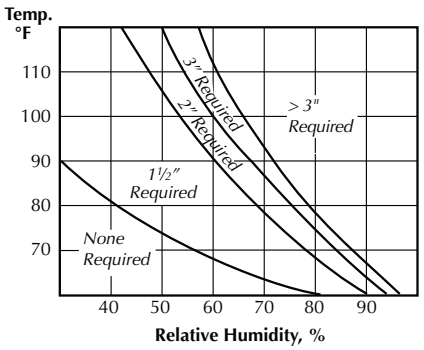

This chart is based on indoor conditions so far as wind and other factors are concerned.

To determine thickness to prevent condensation, based on installed thickness at 75% of nominal (out-of-package) thickness and a duct internal air temperature of 55°F, refer to the condensation control chart.

To use: 1) Select maximum relative humidity (%) on lower axis; 2) Read up vertically until that line intersects the maximum ambient air temperature; 3) Select the thickness indicated at the point of intersection.

THERMAL PERFORMANCE

Product Type	Thickness in.	Thickness mm	R-Value h•ft²•°F/Btu	R-Value m²•°C/W	Installed R-Value h•ft²•°F/Btu	Installed R-Value m²•°C/W	K-Value Btu•in/h•ft²•°F	K-Value W/m²•°C	Installed K-Value Btu•in/h•ft²•°F	Installed K-Value W/m²•°C
75 (0.75 pcf*)	1	25	3.8	0.67	3.0	0.53	0.26	0.038	0.25	0.036
	1½	38	5.2	0.92	4.2	0.74	0.29	0.042	0.27	0.039
	2	51	6.9	1.22	5.7	1.00	0.29	0.042	0.26	0.038
	2⅛	54	7.3	1.29	6.0	1.06	0.29	0.042	0.27	0.038
	2½	64	8.6	1.51	7.1	1.25	0.29	0.042	0.26	0.037
	3	76	10.2	1.80	8.3	1.46	0.29	0.42	0.27	0.039
	4	102	13.5	2.38	11.0	1.94	0.30	0.043	0.27	0.039
100 (1.0 pcf*)	1	25	3.8	0.67	3.0	0.53	0.26	0.038	0.25	0.036
	1½	38	5.7	1.00	4.5	0.79	0.26	0.038	0.25	0.036
	2	51	7.6	1.34	6.1	1.07	0.26	0.038	0.25	0.035
150 (1.5 pcf*)	1	25	4.1	0.72	3.2	0.56	0.24	0.035	0.23	0.034
	1½	38	6.2	1.09	4.8	0.85	0.24	0.035	0.23	0.034
	2	51	8.3	1.46	6.4	1.13	0.24	0.035	0.23	0.034

Tested in accordance with ASTM C518 and/or ASTM C177 at 75°F (24°C) mean temperature. R means resistance to heat flow. The higher the R-value, the greater the insulating power. The installed R-value and K-value based upon 25% compression of the product thickness during installation. To get the installed R-value, it is essential that this insulation be installed properly. If you do it yourself, follow the installation instructions carefully.

*pcf. is pounds per square foot

INSTALLATION STRETCH-OUT DIMENSIONS

Product Label Thickness in.	Product Label Thickness mm	Average Installed Thickness in.	Average Installed Thickness mm	Stretch-Out Dimensions[1] perim.	Round Duct in.	Round Duct mm	Square Duct in.	Square Duct mm	Rectangular Duct in.	Rectangular Duct mm
1	25	0.75	19	P+	7.0	178	6.0	152	5.0	127
1.5	38	1.13	29	P+	9.5	241	8	203	7	178
2	51	1.50	38	P+	12	305	10	254	8	203
2.125	54	1.59	40	P+	12.6	321	10.4	270	8.4	213
2.5	64	1.875	48	P+	14.5	368	12.5	318	9.5	241
3	76	2.25	57	P+	17	432	14.5	368	11.5	292
4	106	3.00	76	P+	22.0	559	18.5	470	14.5	368

[1] The stretch-out dimension is equal to the duct perimeter (P) plus the add-on factor for the type of duct being installed.

AVAILABLE SIZES

Product Type	Facing	Thickness in.	Thickness mm	Length in.	Length m	Width in.	Width mm
75 (0.75 pcf)	UNFACED	1	25	150	45.7	9 - 72	229 - 1829
		1½	38	150	45.7		
		2	51	75	22.9		
		2½	64	75	22.9		
		3	76	50	15.2		
	FSK/PSK	1½	38	100	30.5	48	1219
		2	51	75	22.9		
		2⅛	54	75	22.9		
		2½	64	75	22.9		
		3	76	50	15.2		
		4	102	50	15.2		
100 (1.0 pcf)	Unfaced	1	25	150	45.7	9 - 72	229 - 1829
	FSK/PSK	1	25	100	30.5	48	1219
		1½	38	100	30.5		
		2	38	75	22.9		
150 (1.5 pcf)	FSK/PSK	1½	38	75	22.9	48	1219
		2	51	50	15.2		

NAIMA · GREENGUARD · U.S. Green Building Council Member · ENERGY STAR AWARD 2014 PARTNER OF THE YEAR Sustained Excellence · ISO 9001:2000 Registered

ASK ABOUT ALL OF OUR OTHER CERTAINTEED® PRODUCTS AND SYSTEMS:

ROOFING • SIDING • TRIM • DECKING • RAILING • FENCE
GYPSUM • CEILINGS • INSULATION

CertainTeed Corporation
P.O. Box 860
Valley Forge, PA 19482

Professional: 800-233-8990
Consumer: 800-782-8777

www.certainteed.com http://blog.certainteed.com

© 11/14 CertainTeed Corporation, Printed in the U.S.A.
Code No. 30-35-016

SAINT-GOBAIN

23 07 13 2.4

Venture Tape™ Aluminum Foil Tape 1521CW

Technical Data **April, 2015**

Product Description

3M™ Venture Tape™ Aluminum Foil Tape 1521CW is a high strength dead soft aluminum foil coated with a cold weather solvent acrylic pressure sensitive adhesive.

Product Construction

Backing	Adhesive	Color	Liner	Standard Roll Length
Aluminum Foil	Acrylic	Natural Aluminum	Release Liner	50 yds (45.7 m)

Features

- Excels in demanding temperature and humidity applications
- Conforms well to irregular surfaces
- Specifically designed for cold weather conditions
- Hand tearable

Typical Physical Properties

Note: The following technical information and data should be considered representative or typical only and should not be used for specification purposes.

Test	Typical Value	Typical Value (Metric)	Test Method
Product Thickness	2.7 mils	0.07 mm	PSTC-133
Peel Adhesion	40 oz/in	11.1 N/25 mm	PSTC-101
Shear Adhesion	>24 hrs @ 2.2 psi	>24 hrs @ 15.2 kPa	PSTC-107
Tensile Strength	16 lb/in	72.3 N/25 mm	PSTC-131
Elongation	5%	5%	PSTC-131
Service Temperature	-40° to 250°F	-40° to 121°C	

Application Ideas

- Applies easily to both fibrous and sheet metal ducts

Classifications

- UL723 Classified (5/10 Flame/Smoke Rating) [UL file #R10984]
- U.S. Coast Guard Approved (CGA #164.112/63/0)

3M™ Venture Tape™ Aluminum Foil Tape 1521CW

Storage

Store in a clean, dry place. Temperature of 40-80°F (4-26°C) and 40 to 50% relative humidity are recommended.

Shelf Life

To obtain best performance, use this product within 12 months from date of manufacture

Technical Information

The technical information, recommendations and other statements contained in this document are based upon tests or experience that 3M believes are reliable, but the accuracy or completeness of such information is not guaranteed.

Product Use

Many factors beyond 3M's control and uniquely within user's knowledge and control can affect the use and performance of a 3M product in a particular application. Given the variety of factors that can affect the use and performance of a 3M product, user is solely responsible for evaluating the 3M product and determining whether it is fit for a particular purpose and suitable for user's method of application.

Warranty, Limited Remedy, and Disclaimer

Unless an additional warranty is specifically stated on the applicable 3M product packaging or product literature, 3M warrants that each 3M product meets the applicable 3M product specification at the time 3M ships the product. 3M MAKES NO OTHER WARRANTIES OR CONDITIONS, EXPRESS OR IMPLIED, INCLUDING, BUT NOT LIMITED TO, ANY IMPLIED WARRANTY OR CONDITION OF MERCHANTABILITY OR FITNESS FOR A PARTICULAR PURPOSE OR ANY IMPLIED WARRANTY OR CONDITION ARISING OUT OF A COURSE OF DEALING, CUSTOM OR USAGE OF TRADE. If the 3M product does not conform to this warranty, then the sole and exclusive remedy is, at 3M's option, replacement of the 3M product or refund of the purchase price.

Limitation of Liability

Except where prohibited by law, 3M will not be liable for any loss or damage arising from the 3M product, whether direct, indirect, special, incidental or consequential, regardless of the legal theory asserted, including warranty, contract, negligence or strict liability.

ISO 9001

This Industrial Adhesives and Tapes Division product was manufactured under a 3M quality system registered to ISO 9001 standards.

Section 20 07-13 23-07-16
23-07-19

3M

Industrial Adhesives and Tapes Division

3M Center, Building 225-3S-06
St. Paul, MN 55144-1000
800-362-3550 • 877-369-2923 (Fax)
www.3M.com/construction

Recycled Paper
40% pre-consumer
10% post-consumer

3M and Venture Tape are trademarks of 3M Company.
Printed in U.S.A.
©3M 2015 All rights reserved.
E 70-0709-4183-9

28

Mécanique Nordique
Plumbing
Heating
Ventillation
mecanique.nordique@hotmail.com
1255 Rue J.A.Bombardier Lévis QC G7A 2P4
Tél : (418) 496-1109 Fax : (418) 496-3803

REVIEWED BY CONTRACTOR
Kudlik Construction Ltd.
NAME: Sandra Rousseau P.Eng
DATE: Jul 12, 2018

IQUALUIT WWTP UPGRADES

DRAWING FOR APPROVAL

ENGINEER: **NUNAMI STANTEC LIMITED**

DRAWING #: AD-028

Section	:	ACESSORIES FOR HEATING PUMPS
Article	:	P-1.3 & P-1.4
Plans	:	M602 & M702
Application	:	SUCTION GUIDE DIFFUSER 4"
Brand	:	COMBINATION VALVES 4"
Model	:	GRUNDFOS ANSI 125 & ANGLE TYPE
Revised #	:	
Supplyer	:	WOLSELEY
Date	:	**12/07/2018**
By	:	Martin Boucher

Pump inlet/outlet size are 2.5" (see AD-007). Confirm suction guide suitable with pump prior to ordering.

STANTEC PROJECT #: 110126045
SUBMITTAL # AD-028

This review by Stantec is for general conformance with the design concept of Stantec's design of the:
- ☐ Architectural
- ☐ Structural
- ☑ Mechanical
- ☐ Electrical
- ☐ Other

Stantec

component(s) only and does not mean that Stantec has verified or approves the shop drawing(s). The Contractor remains solely responsible for the shop drawing(s) and this review by Stantec does not relieve the Contractor of the Contractor's responsibility for errors or omissions in the shop drawing(s) or for meeting all requirements of the contract documents. This review does not mean that Stantec approves the detailed design inherent in the shop drawing, responsibility for which shall remain with the Contractor submitting same, nor does this review mean that Stantec accepts any deviation of the shop drawing(s) from the contract documents. The Contractor is responsible for confirming all dimensions and correlating them at the job site, for all construction means, methods and techniques, and for coordination of construction work of all trades, including coordination of all shop drawings.

- ☐ REVIEWED
- ☑ REVIEWED, AS NOTED
- ☐ REVISE AND RESUBMIT
- ☐ NOT REVIEWED

DATE 2018-07-20
BY Brendan Zrum, P.Eng

Accessories

February 2011

Combination valve



TM 04 7386 2010

Fig. 1 Combination valve

General information

A combination valve fitted between the discharge pipe and the discharge flange of a Grundfos pump gives the following advantages:

- The combination valve combines three valves in one: shut-off valve, balancing valve and check valve.
- The combination valve provides the feature of changing the flange orientation to allow 90 ° pipe connection.
- The combination valve makes it possible to reduce the overall system pressure drop since fewer individual components are needed when installing a pump.
- The combination valve is easy to dismantle and service. Internal parts, such as the disc can be easily removed and/or replaced.
- The combination valve has a built-in bypass valve allowing for drainage of water upstream of the check valve. (See Fig 3. and Fig 4.)
  The bypass valve MUST be CLOSED at all times in normal operation.
  The bypass valve should ONLY be used by authorized personel to drain water from the piping above.

Combination valve range

Combination valves are available with ANSI 125 flanges and ANSI 250 flanges, see technical data below, and a variety of sizes ranging from 2 inches to 14 inches suction and discharge ports, see dimensional table.

Technical data

	ANSI 125	ANSI 250
Pumped liquid	Water	Water
Max. pressure	175 psi	250 psi
Max. liquid temperature	150 °F	248 °F
Test pressure	265 psi	426 psi
Materials:		
Upper body	ASTM A395 (ductile iron) / ASTM A126 Class B (cast iron)	ASTM A395 (ductile iron)
Lower body	ASTM A395 (ductile iron) / ASTM A126 Class B (cast iron)	ASTM A395 (ductile iron)
Stem	ASTM B124 C37700 (bronze)	ASTM A240-304 (stainless steel)
Hand wheel	ASTM A395 (ductile iron)	
Disc	ASTM A395 (ductile iron) / ASTM B124 C37700 (bronze) / ASTM A240- 304 (stainless steel)	
Soft seat	EPDM / ASTM B124 C37900 (bronze)	
Sleeve	ASTM B124 C37700 (bronze)	
Bush	ASTM B124 C37700 (bronze)	
Gland	ASTM B124 C37700 (bronze)	
Spring	ASTM A240-304 (stainless steel)	
Gasket	PTFE	
O-Ring	EPDM	
Disc ring	ASTM B584 C85400 (bronze)	
Disc bush	ASTM B124 C37700 (bronze)	
Bonnet	ASTM B124 C37700 (bronze)	
Disc packing	PTFE	

Installation

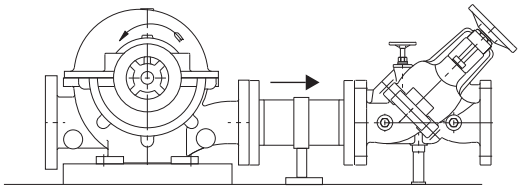

TM04 7387 2410

Fig. 2 Pump installation with combination valve

Accessories

Sectional drawing and components

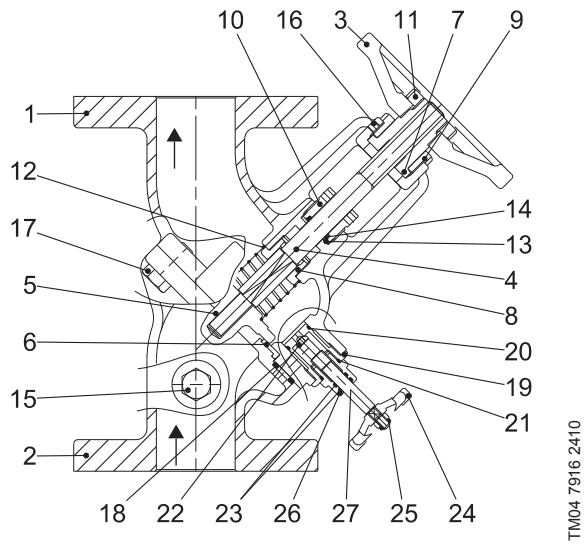

Fig. 3 Sectional drawing of a combination valve 2" to 8"

Typical component list

Po no.	Description	Po no.	Description
1	Upper body	16	Socket set screw
2	Lower body	17	Bolt
3	Hand wheel	18	O-ring
4	Stem	19	Soft seat (bypass)
5	Disc	20	O-ring
6	Soft seat	21	O-ring
7	Sleeve (on shaft)	22	Disc packing
8	Bush	23	O-ring
9	Yoke nut (on shaft)	24	Hand wheel
10	Gland	25	Locknut
11	Hand wheel nut	26	Bonnet
12	Spring	27	Stem B
13	Gasket		
14	O-ring		
15	Plug		

Positions 20-27 cover the bypass valve only.
2" to 8" valves.

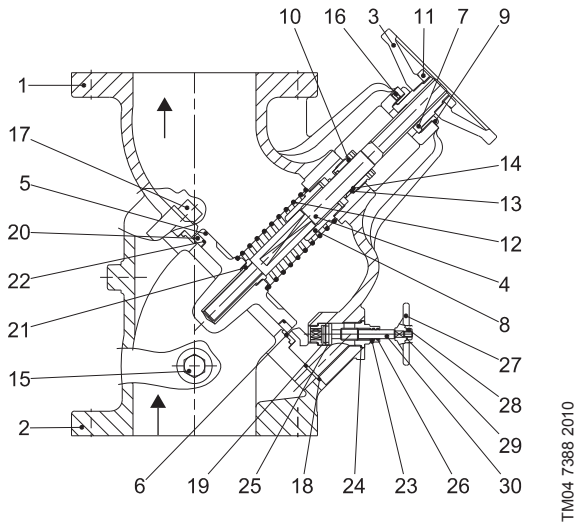

Fig. 4 Sectional drawing of a combination valve 10" to 14"

Typical component list

Po no.	Description	Po no.	Description
1	Upper body	16	Socket set screw
2	Lower body	17	Wrench bolt
3	Hand wheel	18	O-ring
4	Stem	19	Soft seat (bypass)
5	Disc	20	Disc ring
6	Soft seat	21	Disc bush
7	Sleeve (on shaft)	22	O-ring
8	Bush	23	Bonnet
9	Yoke nut (on shaft)	24	O-ring
10	Gland	25	Disc packing
11	Hand wheel nut	26	O-ring
12	Spring	27	Hand wheel
13	Gasket	28	Nut
14	O-ring	29	Spring washer
15	Plug	30	Stem B

Positions 23-30 cover the bypass valve only.
10" to 14" valves.

Accessories

Dimensions and weights- Straight Type

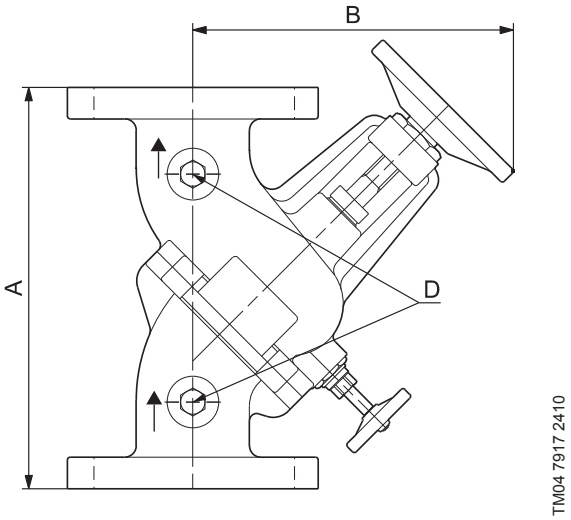

Fig. 5 Dimensional drawing of a combination valve 2" to 8"

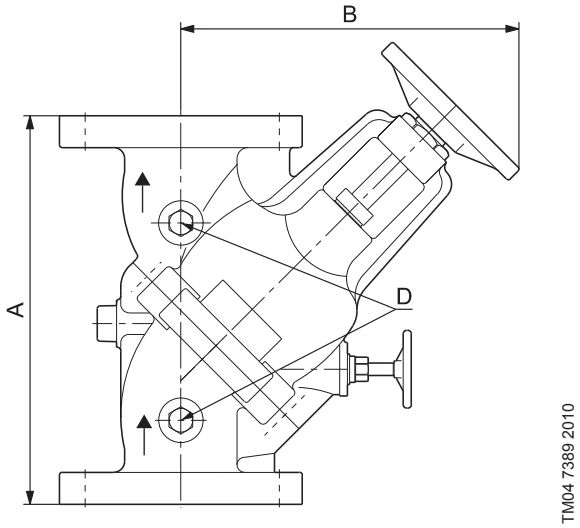

Fig. 6 Dimensional drawing of a combination valve 10" to 14"

ANSI 125

Inlet/outlet [inches]	Dimensions [inches]			Weight [lbs]
	A	B	D-NPT	
2 x 2	9.37	7.91	3/8	25
2.5 x 2.5	11.02	8.82	1/2	34
3 x 3	11.65	9.61	1/2	40
4 x 4	13.27	10.83	1/2	56
5 x 5	14.53	11.89.	1/2	75
6 x 6	17.28	14.45	1/2	120
8 x 8	20.24	16.69	1/2	194
10 x 10	25.04	21.54	1/2	422
12 x 12	27.44	23.35	1/2	635
14 x 14	29.80	27.68	1/2	696

Dimensions shown are valve with open/close position.
All dimension tolerances +/– .25".

ANSI 250

Inlet/outlet [inches]	Dimensions [inches]			Weight [lbs]
	A	B	D-NPT	
2 x 2	9.37	7.91	3/8	25
2.5 x 2.5	11.02	8.82	1/2	34
3 x 3	11.65	9.61	1/2	40
4 x 4	13.27	10.83	1/2	56
5 x 5	14.53	11.89.	1/2	75
6 x 6	17.28	14.45	1/2	120
8 x 8	20.24	16.69	1/2	194
10 x 10	26.42	21.54	1/2	422
12 x 12	28.94	23.35	1/2	635
14 x 14	31.30	27.68	1/2	696

Dimensions shown are valve with open/close position.
All dimension tolerances +/– .25".

Accessories

Dimensions and weights- Angle Type

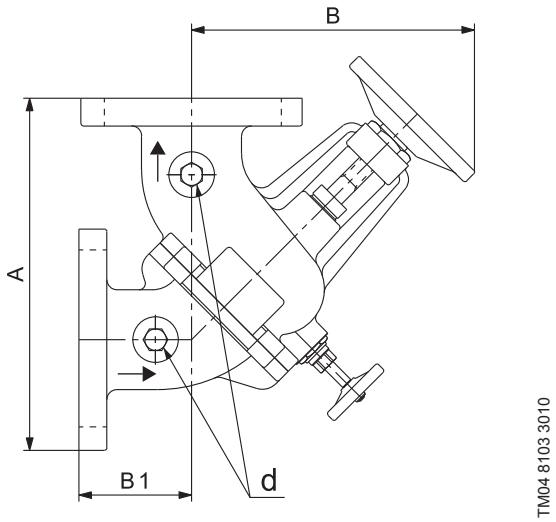

Fig. 7 Dimensional drawing of a combination valve 2" to 8"

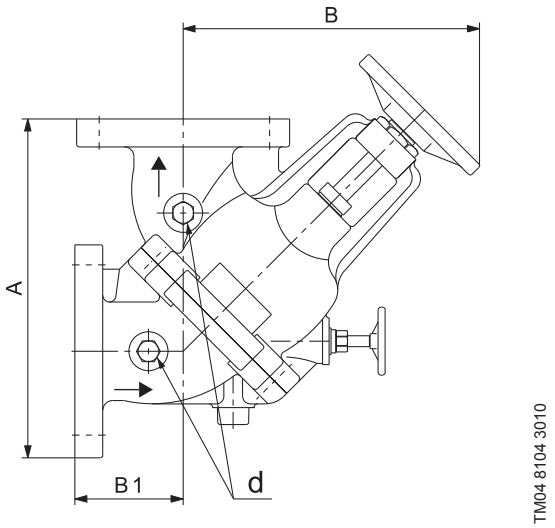

Fig. 8 Dimensional drawing of a combination valve 10" to 14"

ANSI 125

Inlet/outlet [inches]	Dimensions [inches]				Weight [lbs]
	A	B	B1	D-NPT	
2 x 2	7.91	9.33	3.03	3/8	25
2.5 x 2.5	8.82	11.02	3.50	1/2	34
3 x 3	9.61	11.85	3.58	1/2	40
4 x 4	10.83	13.66	4.13	1/2	56
5 x 5	11.89.	15.31	4.17	1/2	75
6 x 6	14.45	17.89	4.88	1/2	120
8 x 8	16.69	20.87	6.12	1/2	194
10 x 10	21.54	25.20	7.76	1/2	422
12 x 12	23.35	28.41	8.50	1/2	635
14 x 14	27.68	31.87	8.54	1/2	696

Dimensions shown are valve with open/close position.
All dimension tolerances +/– .25".

ANSI 250

Inlet/outlet [inches]	Dimensions [inches]				Weight [lbs]
	A	B	B1	D-NPT	
2 x 2	7.91	9.33	3.03	3/8	25
2.5 x 2.5	8.82	11.02	3.50	1/2	34
3 x 3	9.61	11.85	3.58	1/2	40
4 x 4	10.83	13.66	4.13	1/2	56
5 x 5	11.89.	15.31	4.17	1/2	75
6 x 6	14.45	17.89	4.88	1/2	120
8 x 8	16.69	20.87	6.12	1/2	194
10 x 10	21.54	25.20	7.76	1/2	422
12 x 12	23.35	28.41	8.50	1/2	635
14 x 14	27.68	31.87	8.54	1/2	696

Dimensions shown are valve with open/close position.
All dimension tolerances +/– .25".

Accessories

Part numbers

Combination valves can be ordered using these part numbers.
Straight type valve shipped from factory only.See IOM for conversion to angle type valve.

Inlet/outlet [inches]	ANSI 125		ANSI 250	
	Reference No.	Part No.	Reference No.	Part No.
2 x 2	CV20-125	97523122	CV20-250	97523104
2.5 x 2.5	CV25-125	97523123	CV25-250	97523105
3 x 3	CV30-125	96877844	CV30-250	97523106
4 x 4	CV40-125	96877845	CV40-250	97523107
5 x 5	CV50-125	97523124	CV50-250	97523108
6 x 6	CV60-125	96877846	CV60-250	97523109
8 x 8	CV80-125	96877847	CV80-250	97523141
10 x 10	CV10-125	97523125	CV10-250	97523142
12 x 12	CV12-125	97523126	CV12-250	97523143
14 x 14	CV14-125	97523127	CV14-250	97523144

NOTE: Use part no. to order the combination valve.
250# flanges are available upon request with 14 weeks delivery.

Pressure drop

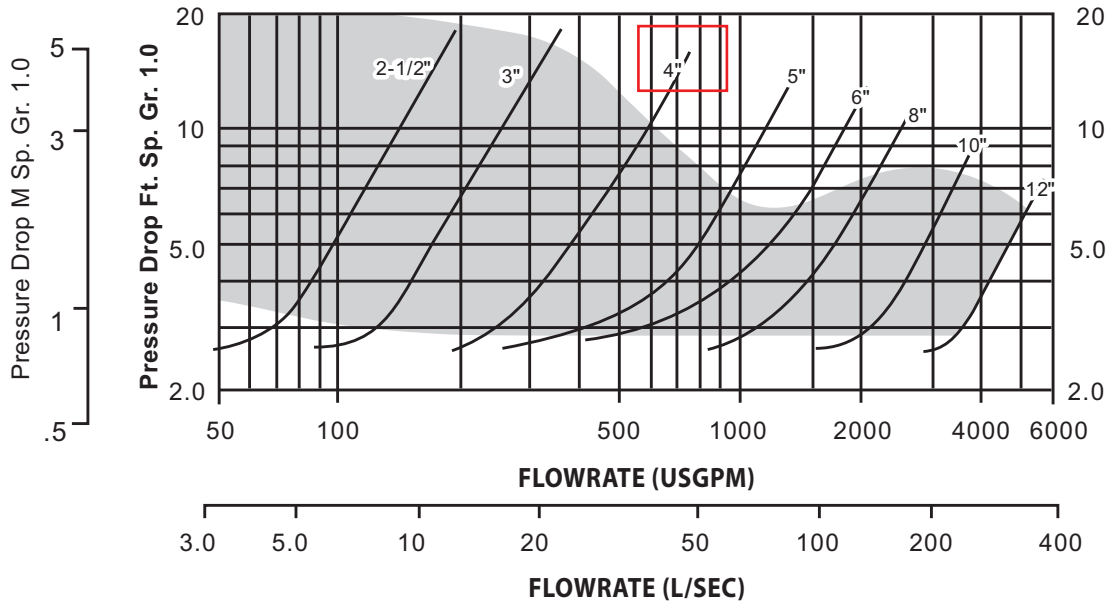

TM04 7390 2010

Fig. 9 Pressure drop graph for combination valves.
Valve in full open position. Size valves in shaded area only.

Accessories

February 2011

Suction diffuser



TM04 7049 1510

Fig. 1 Suction diffuser

General information

A suction diffuser fitted between the suction pipe and the suction flange of a Grundfos pump gives the following advantages:

- The suction diffuser provides and ensures a uniform flow pattern to the suction side of the pump. This ensures a stable NPSH.
- The suction diffuser makes it possible to install the pump in a very narrow spacing as no long bends are necessary.
  The suction diffuser may even save floor space - and thus money.
- The suction diffuser incorporates a cylindrical strainer preventing impurities from entering the pump.
- The suction diffuser comes with a disposable, fine mesh, stainless steel start-up screen for capture and removal of foreign particulates in system piping.
- The suction diffuser has an adjustable support for mounting.
- The suction diffuser is easy to dismantle and service. Internal parts such as strainer can be easily removed, cleaned and/or replaced.

Suction diffuser range

Suction diffusers are available in ANSI 125 flanges and ANSI 250 flanges, see technical data below, and a variety of sizes ranging from 1.5 x 2 inches to 12 x 12 inches suction and discharge ports, see dimensional table.

Technical data

	ANSI 125	ANSI 250
Pumped liquid	Water	Water
Max. pressure	175 psi	250 psi
Max. liquid temperature	150 °F	248 °F
Test pressure	265 psi	426 psi
Materials:		
Body	ASTM 126 Class B (cast iron)	ASTM A395 (ductile iron)
Cover	ASTM 126 Class B (cast iron)	ASTM A395 (ductile iron)
O-ring	EPDM	
Screen	ASTM A240-304 (stainless steel)	

Installation

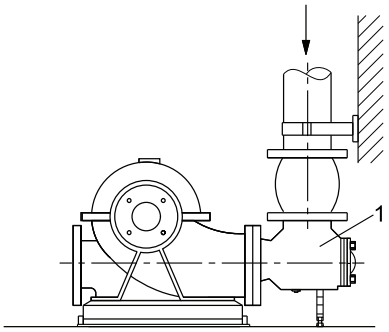

TM04 0096 4907

Fig. 2 Pump installation with suction diffuser

Sectional drawing and components

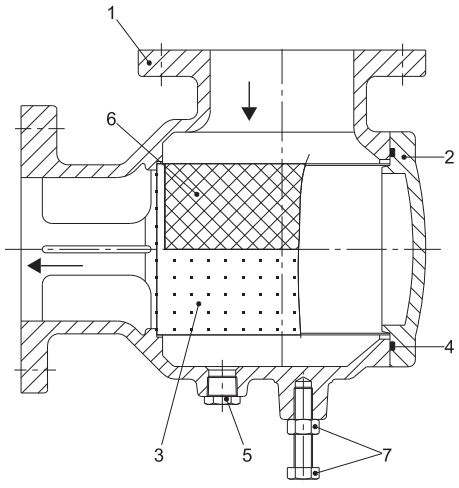

TM04 7050 1510

Fig. 3 Sectional drawing of a suction diffuser

Po no.	Description
1	Body
2	Cover
3	Screen (permanent)
4	O-ring

Po no.	Description
5	Drain plug
6	Screen (temporary)
7	Bolt, nut

Accessories

Dimensions and weights

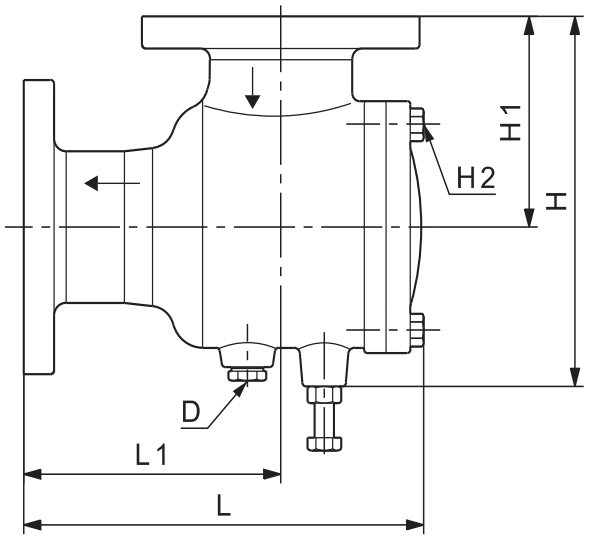

TM04 7051 1510

Fig. 4 Dimensional drawing of a suction diffuser

ANSI 125

Inlet/outlet [inches]	Dimensions [inches]					H2 [no. of bolts]	Weight [lbs]
	L*	L1	H	H1	D-NPT		
2 x 1.5	8.2	5.0	7.2	4.0	1/2	4	21
2 x 2	8.3	5.1	7.2	4.0	1/2	4	22
2.5 x 2	9.7	6.0	8.6	5.0	1/2	4	29
2.5 x 2.5	9.7	6.0	8.6	5.0	1/2	4	34
3 x 2	11.1	7.1	9.6	5.6	1/2	4	39
3 x 2.5	11.1	7.1	9.6	5.6	1/2	4	39
3 x 3	11.1	7.1	9.6	5.6	1/2	4	40
4 x 3	12.9	8.3	11.4	6.5	3/4	6	60
4 x 4	12.9	8.3	11.4	6.5	3/4	6	64
5 x 4	14.3	9.4	12.7	6.9	3/4	6	91
5 x 5	13.9	9.0	12.7	6.9	3/4	6	93
6 x 4	15.7	10.1	14.4	8.0	3/4	6	120
6 x 5	15.9	10.3	14.4	8.0	3/4	6	122
6 x 6	15.6	10.1	14.4	8.0	3/4	6	137
8 x 6	18.9	11.9	17.5	10.0	3/4	6	188
8 x 8	18.9	11.9	17.5	10.0	3/4	6	201
10 x 8	23.5	14.3	20.6	11.5	1	6	305
10 x 10	23.5	14.3	20.6	11.5	1	6	314
12 x 8	28.0	17.9	23.5	12.9	1	8	441
12 x 10	28.0	17.9	23.5	12.9	1	8	448
12 x 12	28.0	17.9	23.5	12.9	1	8	455

* Includes bolt head only, not washer.
All dimension tolerances +/-.125".
Screen Size: Mesh- 20#, Perforated Hole- 0.138".

ANSI 250

Inlet/outlet [inches]	Dimensions [inches]					H2 [no. of bolts]	Weight [lbs]
	L*	L1	H	H1	D-NPT		
2 x 1.5	8.4	5.2	7.4	4.2	1/2	4	21
2 x 2	8.5	5.3	7.4	4.2	1/2	4	22
2.5 x 2	9.7	6.0	8.6	5.0	1/2	4	29
2.5 x 2.5	9.7	6.0	8.6	5.0	1/2	4	34
3 x 2	11.1	7.1	9.6	4.0	1/2	4	39
3 x 2.5	11.1	7.1	9.6	5.6	1/2	4	39
3 x 3	11.1	7.1	9.6	5.6	1/2	4	40
4 x 3	12.9	8.3	11.4	6.5	3/4	6	60
4 x 4	12.9	8.3	11.4	6.5	3/4	6	64
5 x 4	14.3	9.4	12.7	6.9	3/4	6	91
5 x 5	13.9	9.0	12.7	6.9	3/4	6	93
6 x 4	15.7	10.1	14.4	8.0	3/4	6	120
6 x 5	15.9	10.3	14.4	8.0	3/4	6	122
6 x 6	15.6	10.1	14.4	8.0	3/4	6	137
8 x 6	19.4	12.3	18.1	10.5	3/4	6	188
8 x 8	19.4	12.4	18.1	10.5	3/4	6	201
10 x 8	23.5	14.3	20.6	11.5	1	6	305
10 x 10	23.5	14.3	20.6	11.5	1	6	314
12 x 8	28.0	17.9	23.5	12.9	1	8	441
12 x 10	28.0	17.9	23.5	12.9	1	8	448
12 x 12	28.0	17.9	23.5	12.9	1	8	455

* Includes bolt head only, not washer.
All dimension tolerances +/-.125".
Screen Size: Mesh- 20#, Perforated Hole- 0.138".

Accessories

Part numbers

Suction diffusers can be ordered using these part numbers:

Inlet/outlet [inches]	ANSI 125		ANSI 250	
	Reference No.	Part No.	Reference No.	Part No.
2 x 1.5	SD2025-125	97523145	SD2025-250	97523428
2 x 2	SD2020-125	97523146	SD2020-250	97523429
2.5 x 2	SD2520-125	97523147	SD2520-250	97523430
2.5 x 2.5	SD2525-125	97523148	SD2525-250	97523441
3 x 2	SD3020-125	97523149	SD3020-250	97523443
3 x 2.5	SD3025-125	97523150	SD3025-250	97523444
3 x 3	SD3030-125	96877828	SD3030-250	97523445
4 x 3	SD4030-125	97523151	SD4030-250	97523446
4 x 4	SD4040-125	96877830	SD4040-250	97523463
5 x 4	SD5040-125	96877831	SD5040-250	97523464
5 x 5	SD5050-125	97523152	SD5050-250	97523465
6 x 4	SD6040-125	97523153	SD6040-250	97523466
6 x 5	SD6050-125	97523154	SD6050-250	97523467
6 x 6	SD6060-125	96877842	SD6060-250	97523468
8 x 6	SD8060-125	97523155	SD8060-250	97523469
8 x 8	SD8080-125	97666296	SD8080-250	97523470
10 x 8	SD1080-125	97523156	SD1080-250	97523481
10 x 10	SD1010-125	97523157	SD1010-250	97523482
12 x 8	SD1280-125	97523158	SD1280-250	97523483
12 x 10	SD1210-125	97523159	SD1210-250	97523484
12 x 12	SD1212-125	97523160	SD1212-250	97534549

NOTE: Use part no. to order the suction diffuser.
250# flanges are available upon request with 14 weeks delivery.

Pressure drop

In operation the suction diffuser causes a minor pressure drop.

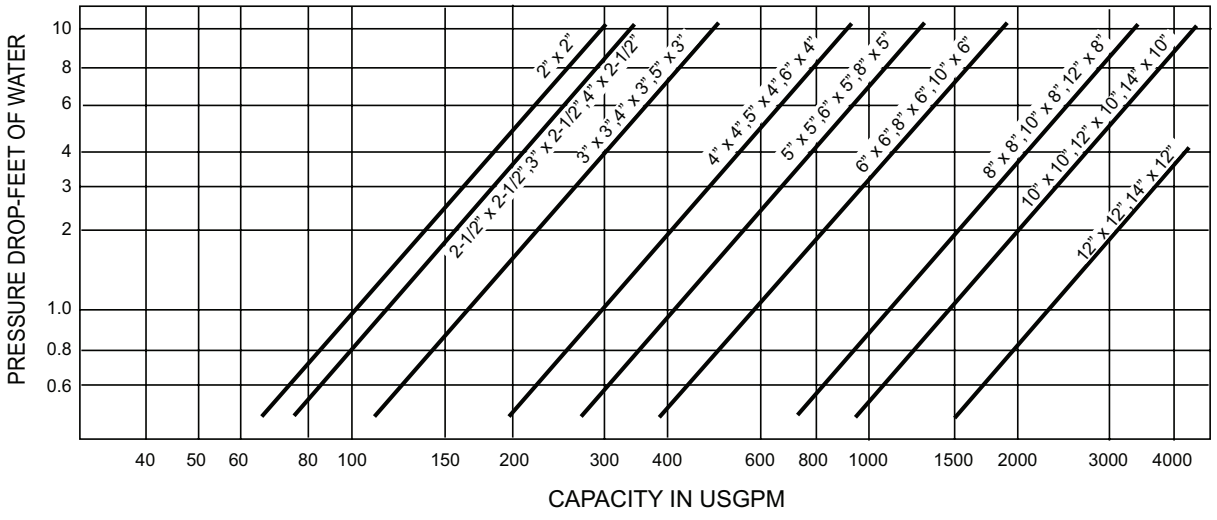

Fig. 5 Pressure drop graph for suction diffusers.

Figure XPTT
GAUGES & THERMOMETERS

FNW™

LOW LEAD COMPLIANT PRESSURE/TEMPERATURE TEST PLUG

The figure XPTT lead free brass pressure/temperature test plugs facilitate quick pressure and temperature readings at recommended test points without disturbing the process. They are widely used in the HVAC industry.



Features:

- 1,000 PSI Maximum Operating Pressure
- 1/4" or 1/2" MNPT End Process Connection
- Lead Free Brass Body
- Complies with Federal Lead-Free Law (Sec. 1417)
- EPDM Diaphragm/Core
- Plastic Cap Retainer
- 320°F (160°C) Process Temperature Limit

Low Lead Compliant: Referring to laws defining "Lead Free" as wetted surface of pipe, fittings and fixtures in potable water systems that have a weighted average lead content ≤ 0.25% per the Safe Drinking Water Act (Sec. 1417) amended 1-4-2011 as well as other state regulations.

LOW LEAD COMPLIANT

Part Numbers

Size	Part Number
1/4"	FNWXPTTB
1/2"	FNWXPTTD

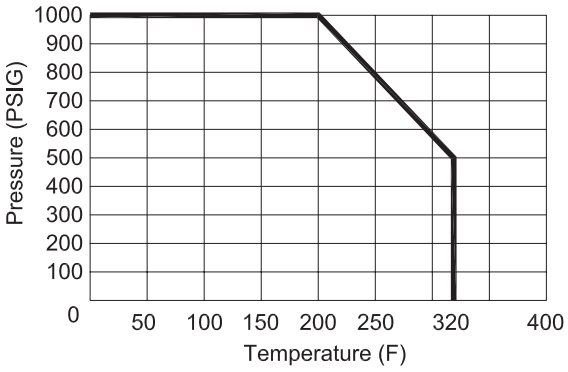

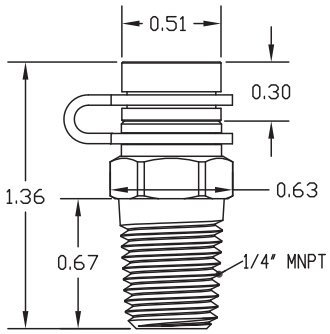

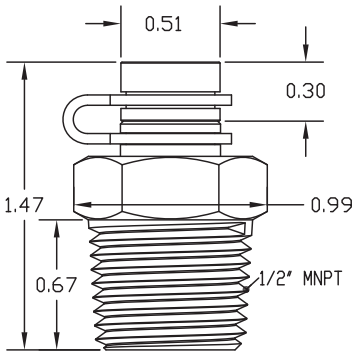

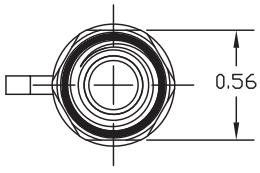

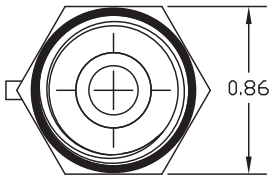

DOC: FNWXPTT13 Ver. 10/2013

© 2013 - FNW. All rights reserved.
The FNW logo is a trademark of Ferguson Enterprises, Inc., PL Sourcing, PO Box 2778, Newport News, VA 23609 www.fnw.com

The contents of this publication are presented for information purposes only, and while effort has been made to ensure their accuracy, they are not to be construed as warranties or guarantees, expressed or implied, regarding the products or services described herein or their use or applicability. All sales are governed by our terms and conditions, which are available on request. We reserve the right to modify or improve the designs or specifications of our products at any time without notice. Always verify that you have the most recent product specifications or other documentation prior to the installation of these products.

Suction diffuser- IOM

Installation

1. Install suction diffuser in piping with proper flow direction as indicated on diffuser.
2. Provide appropriate clearance in back of diffuser for removal of strainer (Fig. 2, Po no. 3).
3. Use support foot to adjust the height (Fig. 2, Po no. 7).
4. Flush system piping and operate pumps for initial circulation of system.
5. After initial system circulation is complete, remove and discard the temporary mesh screen (See Fig. 2, Po no. 6). Do not discard the permanent screen.

Installation

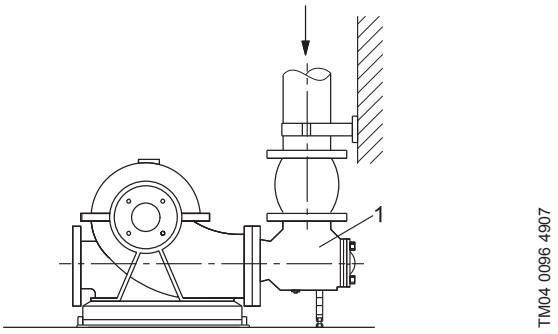

Fig. 1 Pump installation with suction diffuser (1)

Caution ***When using inertia base, the suction diffuser must also be footed on the base along with the pump.***

Operation and Maintenance

Periodically (dependent on system conditions) open the suction diffuser and clean debris from strainer basket. Inspect strainer for holes. Replace if damaged.

Sectional drawing and components

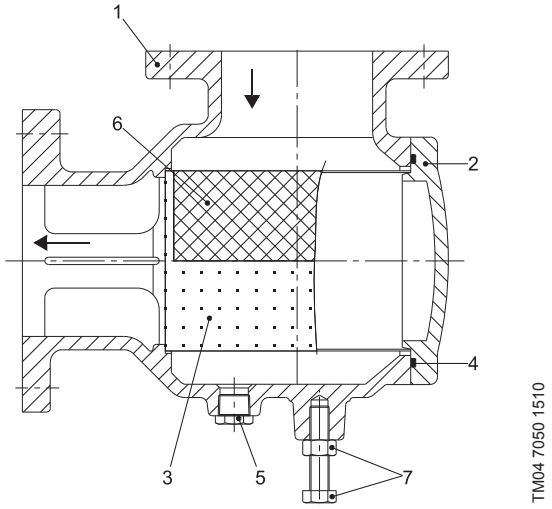

Fig. 2 Sectional drawing of a suction diffuser

Po no.	Description
1	Body
2	Cover
3	Screen (permanent)
4	O-ring

Po no.	Description
5	Drain plug
6	Screen (temporary)
7	Bolt, nut (support foot)

Combination valve-IOM

Installation

Install combination valve on discharge side of the pump with proper flow direction as indicated on the valve.

It is not recommended to install the valve directly to the pump. Use a spool piece between the pump and the valve.

Allow enough room around the valve for easy access for removal and repair.

Warning

The bypass valve MUST be CLOSED at all times in normal operation. (See Fig. 4 and Fig. 5.)

Installation

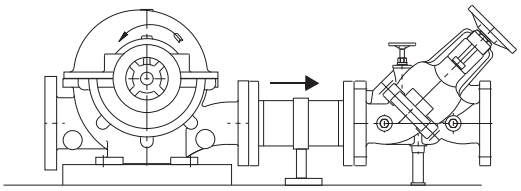

Fig. 1 Pump installation with combination valve

Operation and Maintenance

We suggest you slightly open the valve before starting the pump. Gradually adjust the stem until the proper flow rate is reached.

Procedure for Angle type conversion

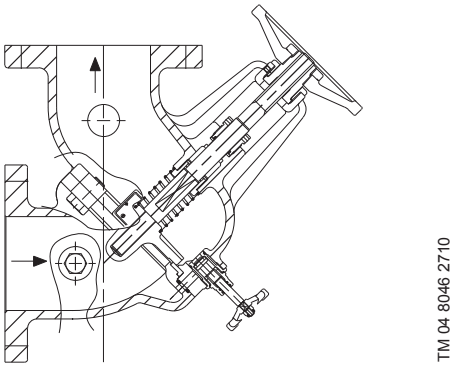

Fig. 2 Angle type combination valve 2" to 8"

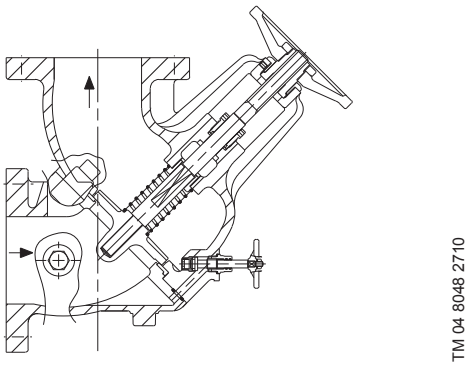

Fig. 3 Angle type combination valve 10" to 14"

Procedure

1. Place valve on an even and clean surface.
2. Open the handle (hand wheel) slightly.
3. Turn the handle so that the handle is facing the ground.
4. Remove bolts that connect upper and lower body. (Remember the original location of the bolts)
5. Rotate the lower body slowly to 180 degree.
6. Tighten the bolts in diagonal order.
7. Make sure all parts are in correct position. (See Fig 4. and Fig 5).

Caution ***Conversion portion should be done by experienced worker.***

Disc, o-ring, spring, and seat should be handled very carefully and should be in right position before installation.

Accessories

Sectional drawing and components

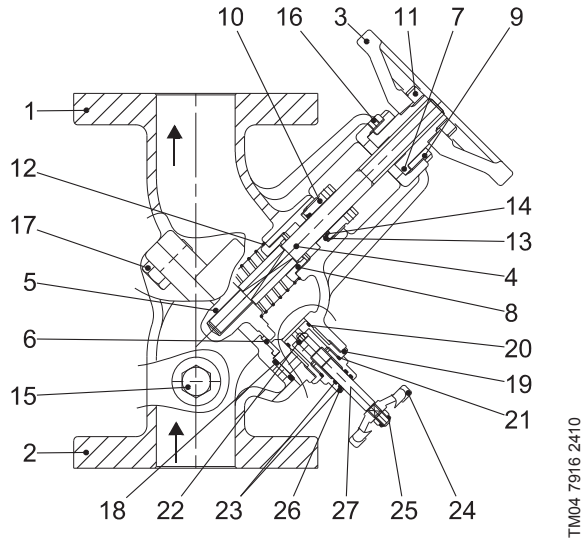

Fig. 4 Sectional drawing of a combination valve 2" to 8"

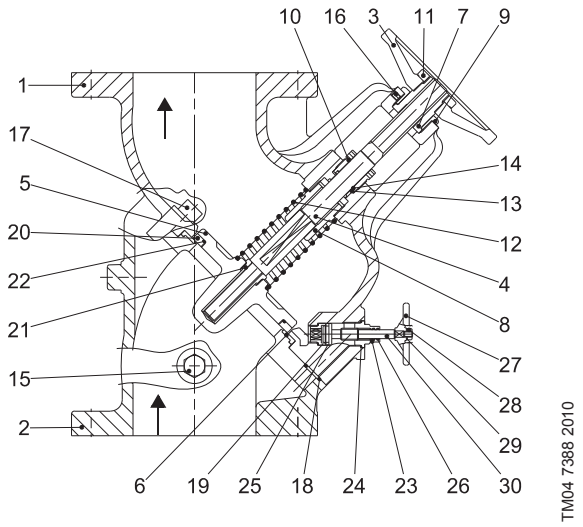

Fig. 5 Sectional drawing of a combination valve 10" to 14"

Typical component list

Po no.	Description	Po no.	Description
1	Upper body	16	Socket set screw
2	Lower body	17	Bolt
3	Hand wheel	18	O-ring
4	Stem	19	Soft seat (bypass)
5	Disc	20	O-ring
6	Soft seat	21	O-ring
7	Sleeve (on shaft)	22	Disc packing
8	Bush	23	O-ring
9	Yoke nut (on shaft)	24	Hand wheel
10	Gland	25	Locknut
11	Hand wheel nut	26	Bonnet
12	Spring	27	Stem B
13	Gasket		
14	O-ring		
15	Plug		

Positions 20-27 cover the bypass valve only.
2" to 8" valves.

Typical component list

Po no.	Description	Po no.	Description
1	Upper body	16	Socket set screw
2	Lower body	17	Wrench bolt
3	Hand wheel	18	O-ring
4	Stem	19	Soft seat (bypass)
5	Disc	20	Disc ring
6	Soft seat	21	Disc bush
7	Sleeve (on shaft)	22	O-ring
8	Bush	23	Bonnet
9	Yoke nut (on shaft)	24	O-ring
10	Gland	25	Disc packing
11	Hand wheel nut	26	O-ring
12	Spring	27	Hand wheel
13	Gasket	28	Nut
14	O-ring	29	Spring washer
15	Plug	30	Stem B

Positions 23-30 cover the bypass valve only.
10" to 14" valves.

29

REVIEWED BY CONTRACTOR
Kudlik Construction Ltd.
NAME: Sandra Rousseau P.Eng
DATE: Jul 12, 2018

Mécanique Nordique
Plumbing
Heating
Ventillation
mecanique.nordique@hotmail.com

1255 Rue J.A.Bombardier
Lévis, Québec
G7A 2P4
Téléphone: 418-496-1109
Télécopieur: 418-496-3803

IQALUIT WWTP UPGRADE

DRAWING FOR APPROVAL

Ingineer : NUNAMI STANTEC

DRAWING #: AD-029

Section 25 30 02
Article 2.27.1
Plans M-601
Application : Wirings Conduit , Terminations , Boxes
Brand : Differents
Model : Differents
Revised # :
Supplyer : JOHNSON CONTROLS

Pages incl. 291
Date : **2018-07-12**
By : **Mécanique Nordique Inc.**

STANTEC PROJECT #: 110126045
SUBMITTAL # AD-029
This review by Stantec is for general conformance with the design concept of Stantec's design of the:
☐ Architectural ☑ Electrical
☐ Structural ☐ Other
☐ Mechanical
component(s) only and does not mean that Stantec has verified or approves the shop drawing(s). The Contractor remains solely responsible for the shop drawing(s) and this review by Stantec does not relieve the Contractor of the Contractor's responsibility for errors or omissions in the shop drawing(s) or for meeting all requirements of the contract documents. This review does not mean that Stantec approves the detailed design inherent in the shop drawing, responsibility for which shall remain with the Contractor submitting same, nor does this review mean that Stantec accepts any deviation of the shop drawing(s) from the contract documents. The Contractor is responsible for confirming all dimensions and correlating them at the job site, for all construction means, methods and techniques, and for coordination of construction work of all trades, including coordination of all shop drawings.
Stantec
☑ REVIEWED
☐ REVIEWED, AS NOTED
☐ REVISE AND RESUBMIT
☐ NOT REVIEWED
DATE 2018-07-30
BY Konrad Goluch

INSTALLATION TYPE
CLASS 0 : NO CLASSIFICATION

DRAWING REFERENCE : 3309-INST-1

1.1 E.M.T. SET-SCREW COUPLING
1.2 ELECTRICAL METALLIC TUBING E.M.T.
1.3 E.M.T. SET-SCREW FITTING
1.4 4 INCH. SQUARE BOXE COVER
1.5 4 INCH. SQUARE BOXE
1.6 UTILITY BOXE COVER
1.7 ARMOURED CABLE/FLEXIBLE CONDUIT-ONE SCREW FITTING
1.8 UTILITY BOXE
1.9 LIQUATITE FLEXIBLE CONDUIT
1.10 WIRE/CABLE TYPE

CATEGORY 1: WET LOCATION

DRAWING REFERENCE: 3309-INST-2

2.1 RIGID PVC CONDUIT COUPLING
2.2 PVC STRAP 2 HOLES
2.3 RIGID TUBING PVC CONDUIT
2.4 RIGID PVC CONDUIT TERMINAL ADAPTER
2.5 JUNCTION BOX WITH GASKET
2.6 UTILITY BOXE SINGLE GANG
2.7 LIQUIDTIGHT ZINC ALLOY FITTING
2.8 LIQUATITE FLEXIBLE CONDUIT STEEL

CLASS 1, ZONE 2 AND CATEGORY 1

DRAWING REFERENCE : 3309-INST-3

3.1 CONDULET CONDUIT OUTLET
3.2 VINYL INSULATED BUTT SPLICE
3.3 FS BOXE FSC
3.4 BLANK COVER GASKET
3.5 STAR TECK FITTING
3.6 WIRE/CABLE TYPE

tous droits réservés ©2017 copyright
service technique solution inc.

INSTALLATION TYPE FOR CLASS SHOWN:
- ☑ CLASS 0: NO CLASSIFICATION
- ☐ CATEGORY 1: WET LOCATION
- ☐ CLASS 1, ZONE2 AND CATEGORY 1

SUBMITTED FOR APPROVAL

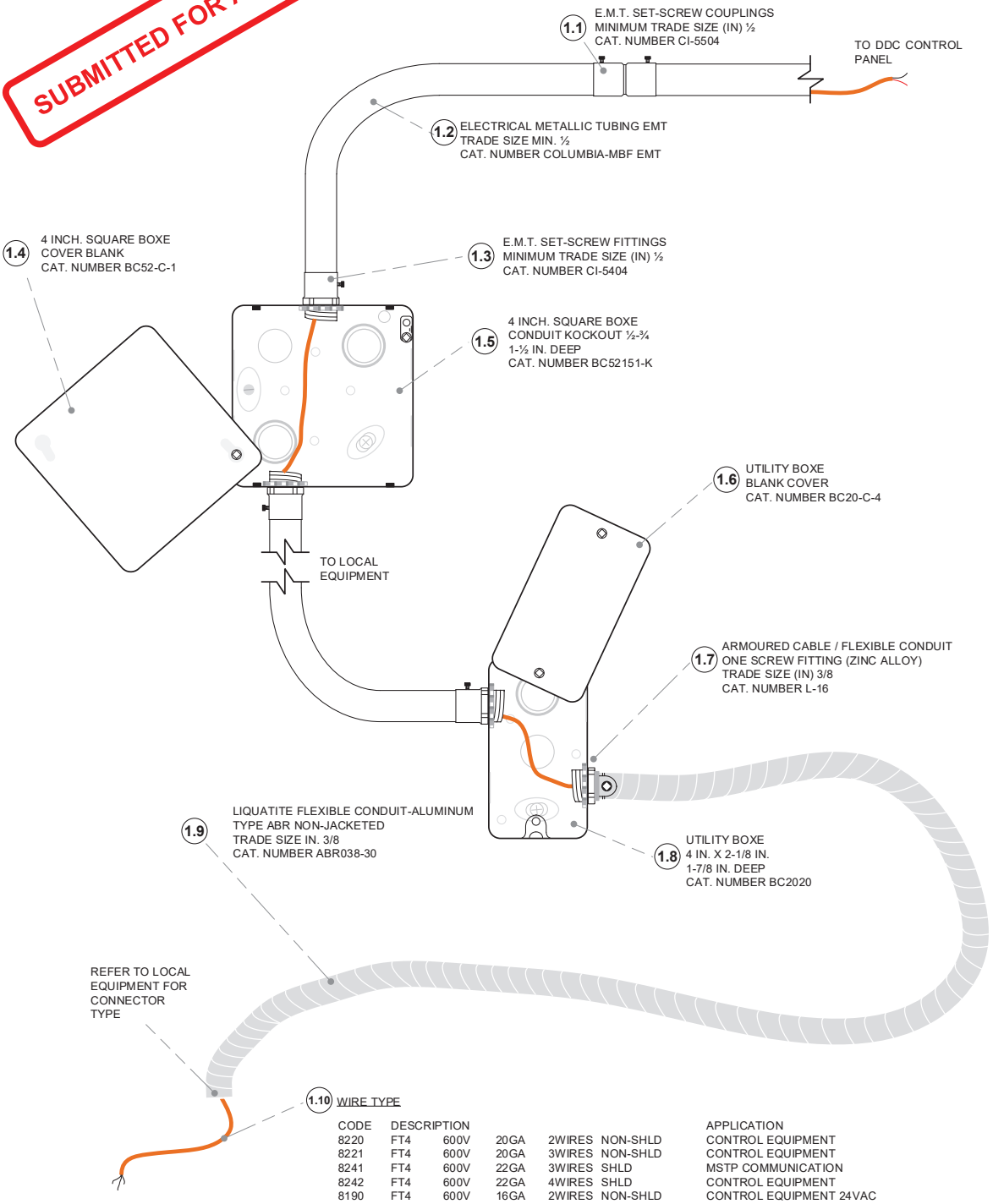

CODE	DESCRIPTION					APPLICATION
8220	FT4	600V	20GA	2WIRES	NON-SHLD	CONTROL EQUIPMENT
8221	FT4	600V	20GA	3WIRES	NON-SHLD	CONTROL EQUIPMENT
8241	FT4	600V	22GA	3WIRES	SHLD	MSTP COMMUNICATION
8242	FT4	600V	22GA	4WIRES	SHLD	CONTROL EQUIPMENT
8190	FT4	600V	16GA	2WIRES	NON-SHLD	CONTROL EQUIPMENT 24VAC

SEE DATA SHEET FOR MORE DETAILS

CLIENT
SOCIÉTÉ DE CONTRÔLE JOHNSON S.E.C.
765 avenue Godin, Ville de Québec
QC, Canada G1M 2W8

PROJET
WASTEWATER TREATMENT PLANT UPG.
City of Iqaluit
NU, Canada

TITRE
INSTALLATION TYPE CLASSIFICATION AREA REF. E002

STS service technique solution
Service Technique Solution Inc.
2112 ave. de la Rivière-Jaune
Québec, QC
G2N 1T5
Tel.: (418) 849-4004
Fax: (418) 841-7820
R.B.Q. 5605-0495-01

REPRESENTANT	GERANT DE PROJET	CONCEPTEUR
S. TURBIDE	S. TURBIDE	S. TURBIDE

DESSINÉ PAR: S.T. 04/07/18
APPROUVÉ PAR: S.L. 05/07/18

DESSIN DE REFERENCE	NO.	REVISION	ECN	DATE	PAR

NUMERO PROJET **3309-06-06**
NUMERO DESSIN **3309-INST-1**
PAGE **1 / 1**

TOUS DROITS RÉSERVÉS/COPYRIGHT SERVICE TECHNIQUE SOLUTION INC.

INSTALLATION TYPE FOR CLASS SHOWN:

- ☐ CLASS 0: NO CLASSIFICATION
- ☑ CATEGORY 1: WET LOCATION
- ☐ CLASS 1, ZONE2 AND CATEGORY 1

SUBMITTED FOR APPROVAL

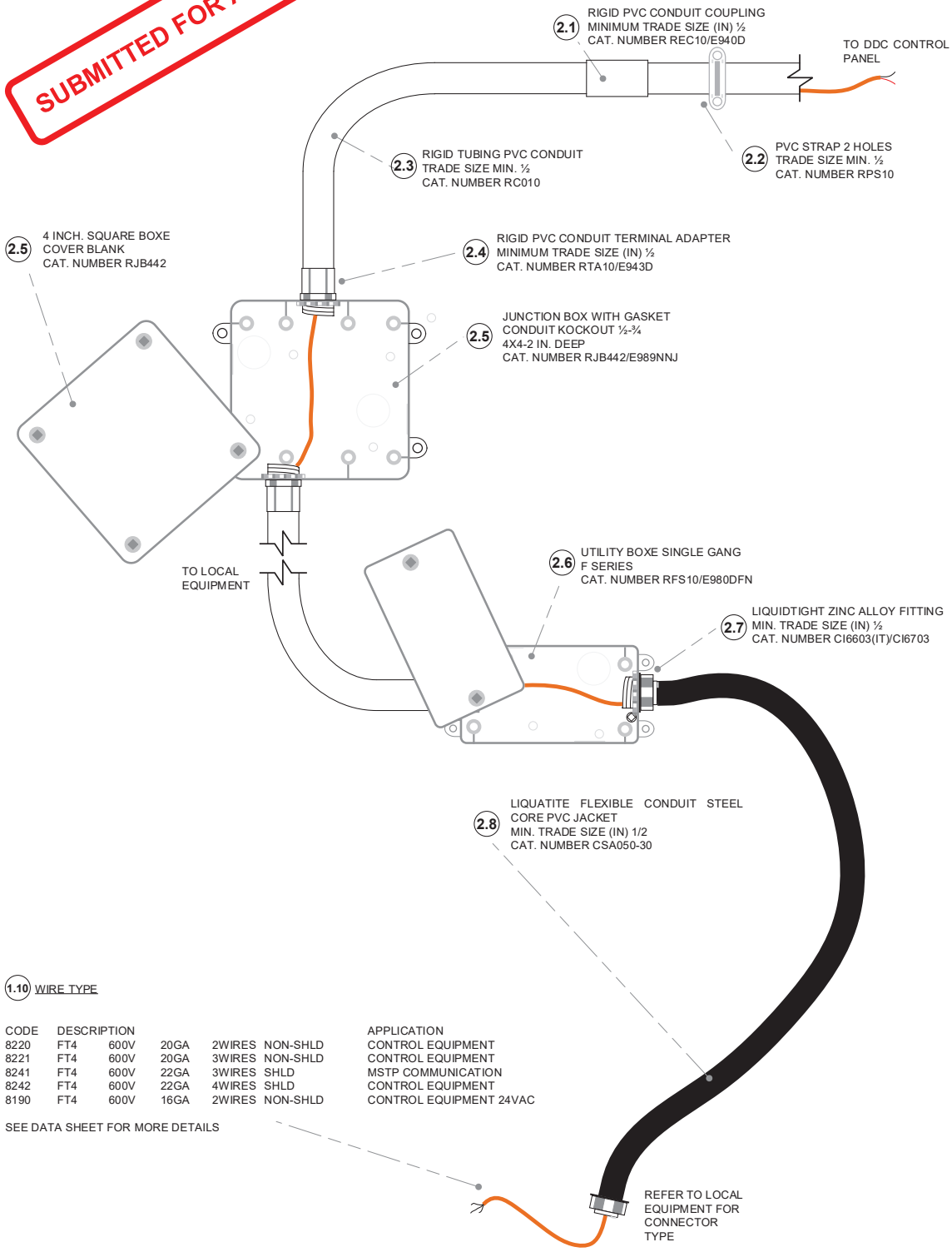

1.10 WIRE TYPE

CODE	DESCRIPTION					APPLICATION
8220	FT4	600V	20GA	2WIRES	NON-SHLD	CONTROL EQUIPMENT
8221	FT4	600V	20GA	3WIRES	NON-SHLD	CONTROL EQUIPMENT
8241	FT4	600V	22GA	3WIRES	SHLD	MSTP COMMUNICATION
8242	FT4	600V	22GA	4WIRES	SHLD	CONTROL EQUIPMENT
8190	FT4	600V	16GA	2WIRES	NON-SHLD	CONTROL EQUIPMENT 24VAC

SEE DATA SHEET FOR MORE DETAILS

CLIENT
SOCIÉTÉ DE CONTRÔLE JOHNSON S.E.C.
765 avenue Godin, Ville de Québec
QC, Canada G1M 2W8

PROJET
WASTEWATER TREATMENT PLANT UPG.
City of Iqaluit
NU, Canada

TITRE
INSTALLATION TYPE CLASSIFICATION AREA REF. E002

STS service technique solution
Service Technique Solution Inc.
2112 ave. de la Rivière-Jaune
Québec, QC
G2N 1T5
Tel.: (418) 849-4004
Fax: (418) 841-7820
R.B.Q. 5605-0495-01

REPRESENTANT	GERANT DE PROJET	CONCEPTEUR
S. TURBIDE	S. TURBIDE	S. TURBIDE

DESSINÉ PAR: S.T. 04/07/18
APPROUVÉ PAR: S.L. 05/07/18

DESSIN DE REFERENCE	NO.	REVISION	ECN	DATE	PAR

NUMERO PROJET **3309-06-06**
NUMERO DESSIN **3309-INST-2**
PAGE **1 / 1**

TOUS DROITS RÉSERVÉS/COPYRIGHT SERVICE TECHNIQUE SOLUTION INC.

SUBMITTED FOR APPROVAL

INSTALLATION TYPE FOR CLASS SHOWN:

- ☐ CLASS 0: NO CLASSIFICATION
- ☐ CATEGORY 1: WET LOCATION
- ☑ CLASS 1, ZONE2 AND CATEGORY 1

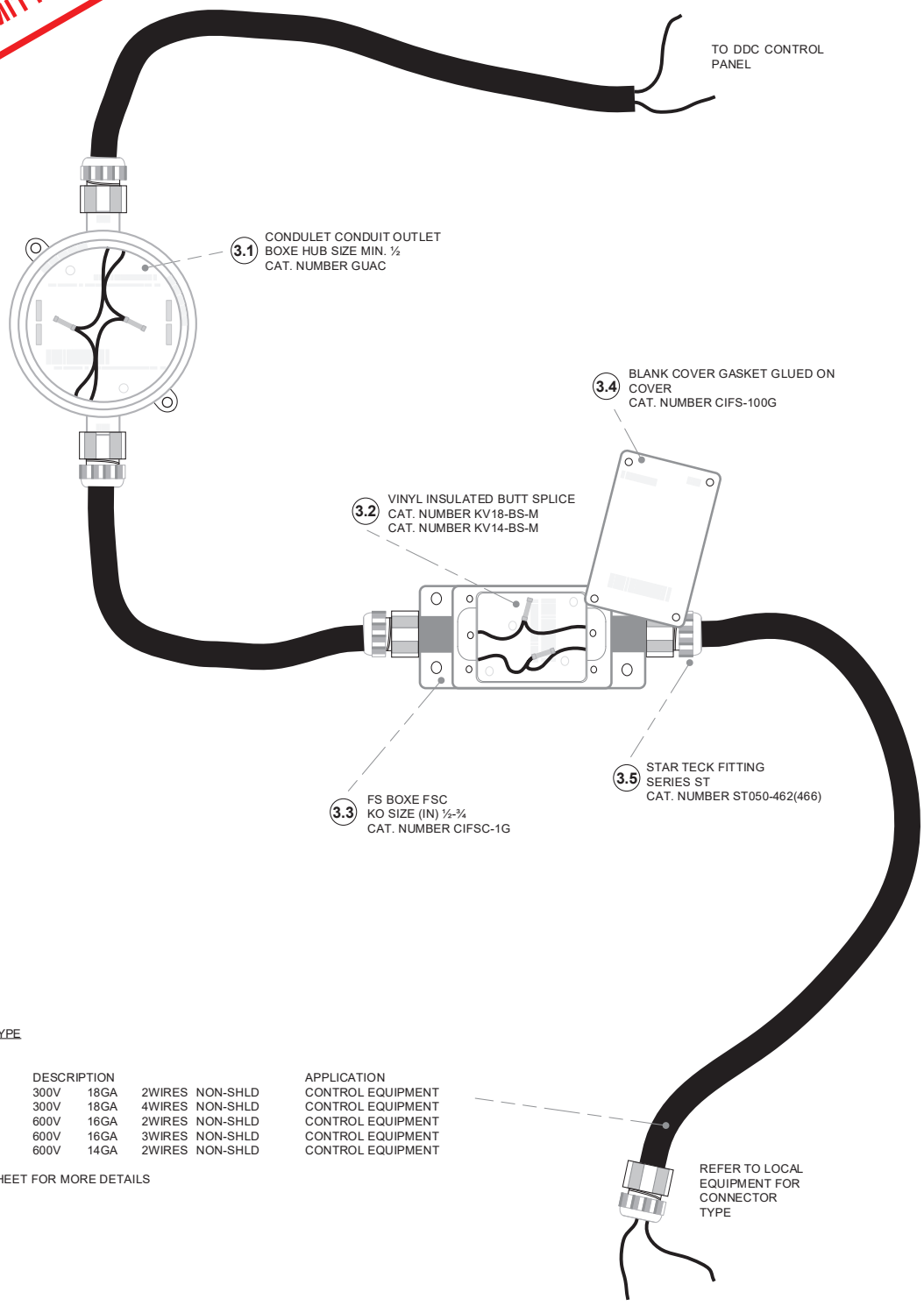

3.6 WIRE TYPE

CODE	DESCRIPTION				APPLICATION
33H1801X	300V	18GA	2WIRES	NON-SHLD	CONTROL EQUIPMENT
33H1802X	300V	18GA	4WIRES	NON-SHLD	CONTROL EQUIPMENT
46A1602-40	600V	16GA	2WIRES	NON-SHLD	CONTROL EQUIPMENT
46A1603-40	600V	16GA	3WIRES	NON-SHLD	CONTROL EQUIPMENT
19A1402	600V	14GA	2WIRES	NON-SHLD	CONTROL EQUIPMENT

SEE DATA SHEET FOR MORE DETAILS

CLIENT
SOCIÉTÉ DE CONTRÔLE JOHNSON S.E.C.
765 avenue Godin, Ville de Québec
QC, Canada G1M 2W8

PROJET
WASTEWATER TREATMENT PLANT UPG.
City of Iqaluit
NU, Canada

TITRE
INSTALLATION TYPE CLASSIFICATION AREA REF. E002

STS service technique solution
Service Technique Solution Inc.
2112 ave. de la Rivière-Jaune
Québec, QC
G2N 1T5
Tel.: (418) 849-4004
Fax: (418) 841-7820
R.B.Q. 5605-0495-01

REPRESENTANT	GERANT DE PROJET	CONCEPTEUR
S. TURBIDE	S. TURBIDE	S. TURBIDE

DESSINÉ PAR:	APPROUVÉ PAR:
S.T. 04/07/18	S.L. 05/07/18

DESSIN DE REFERENCE	NO.	REVISION	ECN	DATE	PAR

NUMERO PROJET **3309-06-06**

NUMERO DESSIN **3309-INST-3**

PAGE **1 / 1**

TOUS DROITS RÉSERVÉS/COPYRIGHT SERVICE TECHNIQUE SOLUTION INC.

EMT

Set Screw Fittings

CI5404 (-IT) / CI5408 (-IT)



CI5410 (-IT) / CI5432 (-IT)



c UL us LISTED

Cat. No.		Trade Size (in.)
Regular	Insulated	
EMT Set Screw Fittings (Steel)		
CI5404	CI5404-IT	1/2
CI5406	CI5406-IT	3/4
CI5408	CI5408-IT	1
CI5410	CI5410-IT	1-1/4
CI5412	CI5412-IT	1-1/2
CI5416	CI5416-IT	2
CI5420	CI5420-IT	2-1/2
CI5424	CI5424-IT	3
CI5432	CI5432-IT	4

Concrete-tight

CI5004 (-IT) / CI5008 (-IT)



CI5010 (-IT) / CI5016 (-IT)



CI5020 (-IT) / CI5032 (-IT)



Cat. No.		Trade Size (in.)
Regular (Zinc)	Insulated (Steel)	
EMT Set Screw Fittings (Zinc)		
CI5004	CI5004-IT	1/2
CI5006	CI5006-IT	3/4
CI5008	CI5008-IT	1
CI5010	CI5010-IT	1-1/4
CI5012	CI5012-IT	1-1/2
CI5016	CI5016-IT	2
CI5020	CI5020-IT	2-1/2
CI5024	CI5024-IT	3
CI5032	CI5032-IT	4

Concrete-tight. Zinc Die Cast Locknut. IT: with insulated throat.

CI5054 / CI5058



Cat. No.	Trade Size (in.)	Offset (in.)
EMT Set Screw Offset Body Fittings (Zinc Alloy)		
CI5054	1/2	3/8
CI5056	3/4	3/4
CI5058	1	3/4

Concrete-tight.

TC121A-FA





Cat. No.		Trade Size (in.)	Std. Pkg. Qty
Regular	Insulated		
EMT / Fire Alarm Set Screw Fittings (Red Steel)			
TC121A-FA	TC721A-FA	1/2	50
TC122A-FA	TC722A-FA	3/4	50
TC123A-FA	TC723A-FA	1	25

EMT

Set Screw Couplings

CI5504 / CI5508



CI5120 / CI5132



CI5104 / CI5116



CI5510 / CI5532



1.1

Cat. No.		Trade Size (in.)
Steel	Zinc Alloy	
EMT Set Screw Couplings		
CI5504*	CI5104	1/2
CI5506*	CI5106	3/4
CI5508*	CI5108	1
CI5510*	CI5110	1-1/4
CI5512*	CI5112	1-1/2
CI5516*	CI5116	2
CI5520*	CI5120	2-1/2
CI5524*	CI5124	3
CI5532*	CI5132	4

* cULus Listed only
Concrete-tight

CI5164 / CI5168



Cat. No.	Trade Size (in.)	
	EMT	Rigid
EMT / Rigid Couplings (Zinc Alloy)		
CI5164	1/2	1/2
CI5166	3/4	3/4
CI5168	1	1

Concrete-tight

TK121A-FA





Cat. No.	Trade Size (in.)	Std. Pkg. Qty
EMT / Fire Alarm Set Screw Couplings (Red Steel)		
TK121A-FA	1/2	50
TK122A-FA	3/4	50
TK123A-FA	1	25

EMT

Compression Fittings and Couplings

- Models from 2-1/2 to 4 in. are also suitable for rigid and IMC conduit

TC111A



TC711A



Cat. No.		Trade Size (in.)
Regular	Insulated	
EMT Compression Fittings (Zinc-plated steel)		
TC111A	TC711A	1/2
TC112A	TC712A	3/4
TC113A	TC713A	1
TC114A*	TC714A	1-1/4
TC115A*	TC715A	1-1/2
TC116A*	TC716A	2
TC117A	TC717A	2-1/2
TC118A	TC718A	3
TC119A	TC719A	3-1/2
TC1110A	TC7110A	4

UL FILE NO. E-16592. * O-rings are supplied.
Concrete-tight.

TK111A



Cat. No.	Trade Size (in.)
EMT Compression Couplings (Zinc-plated steel)	
TK111A	1/2
TK112A	3/4
TK113A	1
TK114A	1-1/4
TK115A	1-1/2
TK116A	2
TK117A	2-1/2
TK118A	3
TK119A	3-1/2
TK1110A	4

UL FILE NO. E-16592.
Concrete-tight.

CI5804 (-IT) / CI5832 (-IT)



Zinc Die Cast Locknut
IT: with insulated throat

Cat. No.		Trade Size (in.)
Regular	Insulated	
EMT Compression Fittings (Zinc Alloy)		
CI5804	CI5804-IT	1/2
CI5806	CI5806-IT	3/4
CI5808	CI5808-IT	1
CI5810	CI5810-IT	1-1/4
CI5812	CI5812-IT	1-1/2
CI5816	CI5816-IT	2
CI5820	CI5820-IT	2-1/2
CI5824	CI5824-IT	3
CI5832	CI5832-IT	4

Concrete-tight.

CI5904 / CI5932



Cat. No.	Trade Size (in.)
EMT Compression Couplings (Zinc Alloy)	
CI5904	1/2
CI5906	3/4
CI5908	1
CI5910	1-1/4
CI5912	1-1/2
CI5916	2
CI5920	2-1/2
CI5924	3
CI5932	4

Concrete-tight.

EMT

Wet-location fittings



CI5612-IT-WL





CI5706-WL



CI5620-WL

Specifications

Material: Steel body and steel locknut
Finish: Electro zinc plated
Liner (insulated fittings only): Nylon
Threads: Hub threads (NPS)
Sealing Gasket: Neoprene
Sealing Ring: Nylon
Use: Wet locations, concrete-tight

UL Listed Raintight (File E-16592)
UL514B / CSAC22.2–N°18.3
NEMA FB-1
NEMA 3R

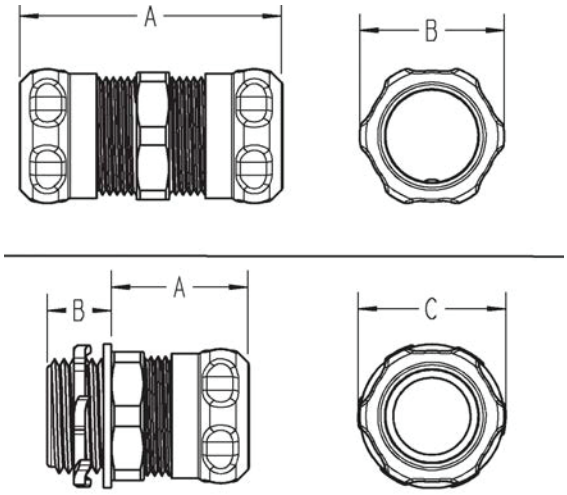

Wet-location EMT compression fittings

Cat. No.	Hub Size (in.)	Dimensions (in.)			Std. Ctn.
		A	B	C	
Non-insulated					
CI5604-WL	½	1.22	0.47	1.14	100
CI5606-WL	¾	1.21	0.48	1.38	50
CI5608-WL	1	1.30	0.50	1.67	25
CI5610-WL	1-¼	1.50	0.60	2.06	25
CI5612-WL	1-½	1.53	0.65	2.27	20
CI5616-WL	2	1.67	0.73	2.77	10
CI5620-WL	2-½	2.77	0.87	3.65	5
CI5624-WL	3	2.75	0.87	4.30	5
CI5632-WL	4	3.12	0.92	5.23	5
Insulated					
CI5604-IT-WL	½	1.22	0.54	1.14	100
CI5606-IT-WL	¾	1.21	0.55	1.38	50
CI5608-IT-WL	1	1.30	0.57	1.67	25
CI5610-IT-WL	1-¼	1.50	0.69	2.06	25
CI5612-IT-WL	1-½	1.53	0.74	2.27	20
CI5616-IT-WL	2	1.67	0.82	2.77	10
CI5620-IT-WL	2-½	2.77	0.99	3.65	5
CI5624-IT-WL	3	2.75	0.99	4.30	5
CI5632-IT-WL	4	3.12	1.04	5.23	5

Wet-location EMT compression couplings

Cat. No.	Hub Size (in.)	Dimensions (in.)			Std. Ctn.
		A	B	C	
CI5704-WL	½	1.94	1.14	–	100
CI5706-WL	¾	2.09	1.38	–	50
CI5708-WL	1	2.31	1.67	–	25
CI5710-WL	1-¼	2.58	2.06	–	25
CI5712-WL	1-½	2.74	2.27	–	20
CI5716-WL	2	2.83	2.77	–	10
CI5720-WL	2-½	4.47	3.65	–	5
CI5724-WL	3	4.70	4.30	–	5
CI5732-WL	4	5.75	5.23	–	5

EMT

Accessories

CI1304 / CI1316



CI1404 / CI1416



CI1520 / CI1532



Cat. No.	Trade Size (in.)	Max. EMT Dia. (in.)	Hole Size (in.)
One Hole EMT Straps (Galvanized Steel)			
CI1304	1/2	0.71	1/4
CI1306	3/4	0.92	1/4
CI1308	1	1.16	5/16
CI1310	1-1/4	1.51	7/16
CI1312	1-1/2	1.74	7/16
CI1316	2	2.20	9/16
Two Hole EMT Straps (Galvanized Steel)			
CI1404	1/2	0.71	3/16
CI1406	3/4	0.92	3/16
CI1408	1	1.16	3/16
CI1410	1-1/4	1.51	1/4
CI1412	1-1/2	1.74	1/4
CI1416	2	2.20	3/8
CI1520	2-1/2	2.88	3/8
CI1524	3	3.50	3/8
CI1528	3-1/2	4.00	1/2
CI1532	4	4.50	1/2

CI5153



CI5154



Cat. No.	Trade Size (in.)		Clamping Range (in.)	
	EMT	Flex.	Min.	Max.
EMT / Flex Couplings (Zinc Alloy)				
CI5153	1/2	3/8	0.17	0.63
CI5154	1/2	1/2	0.75	0.95

CI7538



Cat. No.	Max. Flex. Conduit Dia. (in.)	Hole Size (in.)
One Hole Double Sided Strap (Galvanized Steel)		
CI7538*	1.05	3/16

*Any combination of 3/8 in., 1/2 in. and 3/4 in. EMT, rigid conduit, flexible conduit or teck cables

EMT

Accessories

500-SC / 503-SC

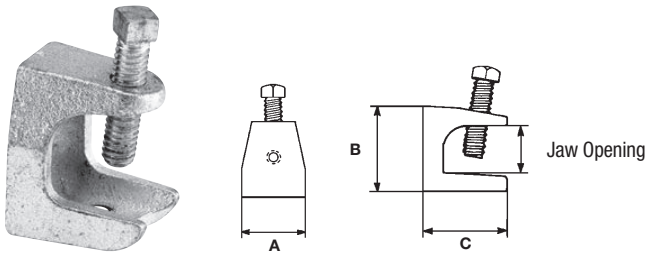

Cat. No.	Trade Size (in.)	Jaw Opening (in.)	Tap Base and Back	Dimensions (in.)		
				A	B	C
Beam Clamps (Malleable Iron)						
500-SC	1/4NC	15/16	1/4-20	1	1-1/4	1-7/16
501	5/16NC	7/8	5/16-18	1-9/16	1-9/16	1-11/16
502	3/8NC	1	3/8-16	2	1-7/8	1-3/4
503-SC	1/2NC	1	1/2-13	2-1/2	2-3/8	2-3/8

CICH-0404 / CICH-3232



Cat. No.	Trade Size (in.)	
	EMT	Rigid
Conduit Hangers-Steel (with nuts & bolts)		
CICH-0404	1/2	1/2
CICH-0606	3/4	3/4
CICH-0808	1	1
CICH-0010	1-1/4	—
CICH-1012	1-1/2	1-1/4
CICH-1200	—	1-1/2
CICH-1616	2	2
CICH-2020	2-1/2	2-1/2
CICH-2424	3	3
CICH-2828	3-1/2	3-1/2
CICH-3232 *	4	4

* Not CSA certified

EMT

Pull Elbows and Conduit Fittings

CI5204 / CI5206



Zinc Die Cast Locknut

CI5304 / CI5306 / CI5308-G / CI5310-G



-G: with gasket.

CICA-1/2 / CICA-2



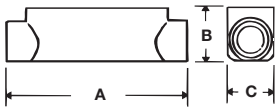

CILBA-1/2 / CILBA-2 / CILBSA-2-1/2 / CILBSA-4



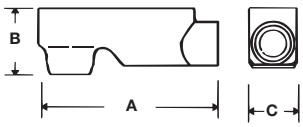

Cat. No.	Trade Size (in.)	Dimensions (in.)		
		A	B	C
Pull Elbows, EMT to Box (Zinc Alloy)				
CI5204	1/2	1-5/16	1-1/8	—
CI5206	3/4	1-1/2	1-1/4	—
Pull Elbows, EMT to EMT (Zinc Alloy)				
CI5304	1/2	1-5/16	15/16	—
CI5306	3/4	1-5/8	1-1/4	—
CI5308-G	1	1-15/16	1-5/8	—
CI5310-G	1-1/4	2-1/4	2	—
EMT Conduit Fittings - "C" Type (Cast Aluminum)				
CICA-1/2	1/2	4-7/8	1-3/8	1-3/8
CICA-3/4	3/4	5-9/16	1-1/2	1-7/16
CICA-1	1	6-1/2	1-3/4	1-3/4
CICA-1-1/4	1-1/4	8-5/8	1-15/16	2-1/2
CICA-1-1/2	1-1/2	8-5/8	2-11/16	2-1/2
CICA-2	2	10-15/16	3	3-3/16
EMT Conduit Fittings - "LB" Type (Cast Aluminum)				
CILBA-1/2	1/2	4-5/16	1-1/2	1-3/8
CILBA-3/4	3/4	4-15/16	1-7/8	1-9/16
CILBA-1	1	6-1/16	2-1/16	1-13/16
CILBA-1-1/4	1-1/4	7-7/8	2-15/16	2-1/2
CILBA-1-1/2	1-1/2	7-7/8	3-1/16	2-1/2
CILBA-2	2	10	3-3/4	3-3/16
CILBSA-2-1/2 *	2-1/2	13	7-3/8	4-1/4
CILBSA-3 *	3	13	7-3/8	4-1/4
CILBSA-3-1/2 *	3-1/2	15-1/4	9	5-1/4
CILBSA-4 *	4	15-1/4	9	5-1/4

Covers and gaskets are included with all aluminum conduit fittings
Types CICA and CILBA are also suitable for use with rigid conduit (NPSM threads)
* For EMT only, not threaded

EMT

Conduit Fittings, Accessories and Entrance Heads

CILRL-1/2 / CILRL-2



Combined LL/LR
Left and right
application

CITA-1/2 / CITA-2



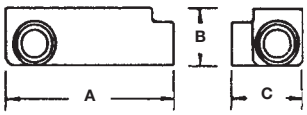

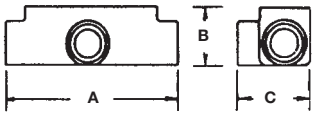

Cat. No.	Trade Size (in.)	Dimensions (in.)		
		A	B	C
EMT Conduit Fittings - "LRL" Type (Cast Aluminum)				
CILRL-1/2	1/2	4-7/16	1-11/16	2-1/8
CILRL-3/4	3/4	5-3/16	1-7/8	2-1/4
CILRL-1	1	6	2-3/16	2-1/2
CILRL-1-1/4	1-1/4	7-15/16	2-3/4	3-1/2
CILRL-1-1/2	1-1/2	7-15/16	3-1/4	3-1/2
CILRL-2	2	10-3/16	3-11/16	4-1/8
EMT Conduit Fittings - "T" Type (Cast Aluminum)				
CITA-1/2	1/2	4-7/8	1-3/8	2-1/16
CITA-3/4	3/4	5-9/16	1-3/4	2-1/8
CITA-1	1	6-1/2	2	2-1/2
CITA-1-1/4	1-1/4	8-11/16	2-5/8	3-1/2
CITA-1-1/2	1-1/2	8-11/16	3	3-9/16
CITA-2	2	10-7/8	3-1/4	4-3/16

Covers and gaskets are included with all aluminum conduit fittings
Types CILRL and CITA are also suitable for use with rigid conduit (NPSM Threads)

CIBC-1/2 / CIBC-2



Cat. No.	Gros. nom. (in.)
Blank Covers for Aluminum Conduit Fittings (Stamped Aluminum)	
CIBC-1/2	1/2
CIBC-3/4	3/4
CIBC-1	1
CIBC-1-1/4	1-1/4
CIBC-2	2

For 1-1/2, use CIBC-1-1/4
Screws not included

CIG-1/2 / CIG-2



Cat. No.	Trade Size (in.)
Gaskets for Aluminum Conduit Fittings (Neoprene)	
CIG-1/2	1/2
CIG-3/4	3/4
CIG-1	1
CIG-1-1/4	1-1/4
CIG-2	2

For 1-1/2, use CIG-1-1/4

CIEFSA-1/2 / CIEFSA-4



Cat. No.	Trade Size (in.)
Service Entrance Heads (Cast Aluminum)	
CIEFSA-1/2	1/2
CIEFSA-3/4	3/4
CIEFSA-1	1
CIEFSA-1 1/4	1-1/4
CIEFSA-1 1/2	1-1/2
CIEFSA-2	2
CIEFSA-2 1/2	2-1/2
CIEFSA-3	3
CIEFSA-3 1/2	3-1/2
CIEFSA-4	4

Consult page D10 for technical specifications

FT-10.1

8241 SPECIFICATIONS

Building Automation & Control

Non-Plenum (FT4)

APPLICATION

Building Automation - HVAC
Régulation

CONDUCTORS	
Material	Tinned copper
Size	22 AWG
Stranding	7 x 0.010"
Configuration	Triad
No. of triads	1
Color code	A (see chart)

INSULATION	
Material	Semi-Rigid PVC
Temperature	105 °C
Insulation thickness	0.01 mm
Voltage	600 Volts

SHIELD	
Type	Foil
Material	Aluminum/Mylar
Thickness	0.025 mm
Apply to	Triad

DRAIN WIRE	
Material	Tinned Copper
Size	24 awg
Construction	7 x 32 awg

OUTER JACKET	
Material	PVC
Jacket thickness	0.167 mm
Color	Orange
Rip cord	Apply
Diameter	4.24 mm

OPTIONS	
CSA/UL approbation	FT4
Quality insurance	ISO 9002
ROHS	Yes

CHARACTERISTICS	
Outer diameter	0.15 mm
Bending radius	50.8 mm
Weight	29.7 kgs/km
Capacitance A*	40.2 pF/ft
Capacitance B**	72.9 pF/ft
Impedance	60 Ohms
Conductor resistance at 20°C	16.6 Ohms/1000

The values shown are nominal.
* Capacitance between conductors
** Capacitance between one conductor and other conductors connected to shield
last revision: 2015-08-19 18:13:06.

FT-10.2

8242 SPECIFICATIONS

Building Automation & Control

Non-Plenum (FT4)

APPLICATION

Building Automation - HVAC
Régulation

CONDUCTORS	
Material	Tinned copper
Size	22 AWG
Stranding	7 x 0.010"
Cabling lay	9 T.P.F.
Configuration	Conductors
Conductor(s)	4
Color code	1 (see chart)

INSULATION	
Material	Semi-rigid PVC
Temperature	105 °C
Insulation thickness	0.25 mm
Voltage	600 Volts

SHIELD	
Type	Foil
Material	Aluminum/Mylar
Thickness	0.038 mm
Apply to	Conductors

DRAIN WIRE	
Material	Tinned Copper
Size	24 awg
Construction	7 x 32 awg

OUTER JACKET	
Material	PVC
Jacket thickness	0.38 mm
Color	Orange
Rip cord	Apply
Diameter	5.23 mm
Temperature	105 °C

OPTIONS	
CSA/UL approbation	FT4
Quality insurance	ISO 9002
ROHS	Yes

CHARACTERISTICS	
Outer diameter	4.14 mm
Bending radius	50.8 mm
Weight	26.47 kgs/km
Capacitance A*	36 pF/ft
Capacitance B**	65 pF/ft
Impedance	60 ohms
Conductor resistance at 20°C	15.7 ohms/1000 ft

The values shown are nominal.
* Capacitance between conductors
** Capacitance between one conductor and other conductors connected to shield
last revision: 2015-08-19 18:13:06.

FT-10.3

8220 SPECIFICATIONS

Building Automation & Control

Non-Plenum (FT4)

APPLICATION

Contrôle de bâtiment - (HVAC)
Régulation

CONDUCTORS	
Material	Bare Copper
Size	20 AWG
Stranding	7 x 0.0126"
Cabling lay	6.67 T.P.F.
Configuration	Pair
Pair(s)	1
Color code	A (see chart)

INSULATION	
Material	Semi-Rigid PVC
Temperature	105 °C
Insulation thickness	0.25 mm
Voltage	600 Volts
Attenuation	

OUTER JACKET	
Material	PVC
Jacket thickness	0.38 mm
Color	Orange
Rip cord	Apply
Diameter	3.94 mm
Temperature	105 °C

OPTIONS	
Quality insurance	ISO 9002
ROHS	Yes

CHARACTERISTICS	
Bending radius	50.8 mm
Weight	19 kgs/km
Capacitance A*	30 pF/pi
Impedance	64 Ohms
Conductor resistance at 20°C	9.33 Ohms/1000'

The values shown are nominal.
* Capacitance between conductors
** Capacitance between one conductor and other conductors connected to shield
last revision: 2016-03-19 17:50:35.

FT-10.4

8221 SPECIFICATIONS

Building Automation & Control

Non-Plenum (FT4)

APPLICATION

Building Automation - HVAC
Régulation

CONDUCTORS	
Material	Bare Copper
Size	20 AWG
Stranding	7 x 0.0126"
Cabling lay	6.67 T.P.F.
Configuration	Triad
No. of triads	1
Color code	A (see chart)

INSULATION	
Material	Semi-rigid PVC
Temperature	105 °C
Insulation thickness	0.25 mm
Voltage	600 Volts

OUTER JACKET	
Material	PVC
Jacket thickness	0.38 mm
Color	Orange
Rip cord	Apply
Diameter	4.04 mm
Temperature	105 °C

OPTIONS	
Quality insurance	ISO 9002
ROHS	Yes

CHARACTERISTICS	
Bending radius	50.8 mm
Weight	21 kgs/km
Capacitance A*	30 pF/ft
Impedance	64 Ohms
Conductor resistance at 20°C	9.33 Ohms/1000 ft

The values shown are nominal.
* Capacitance between conductors
** Capacitance between one conductor and other conductors connected to shield
last revision: 2015-08-19 18:13:06.

FT-10

8190 SPECIFICATIONS

Building Automation & Control

Non-Plenum (FT4)

APPLICATION

Building Automation - HVAC
Régulation

CONDUCTORS	
Material	Bare Copper
Size	16 AWG
Stranding	7 x 0.0192"
Cabling lay	3.71 TPF
Configuration	Pair
Pair(s)	1
Color code	A (see chart)

INSULATION	
Material	Semi-Rigid PVC
Temperature	105 °C
Insulation thickness	0.508 mm
Voltage	600 Volts

OUTER JACKET	
Material	PVC
Jacket thickness	0.58 mm
Color	Orange
Rip cord	Apply
Diameter	5.99 mm
Temperature	105 °C

OPTIONS	
CSA/UL approbation	FT4
Quality insurance	ISO 9002
ROHS	Yes

CHARACTERISTICS	
Bending radius	50.8 mm
Weight	54 kgs/km
Capacitance A*	30 pF/ft
Impedance	64 Ohms
Conductor resistance at 20°C	4.19 Ohms/1000 foot

The values shown are nominal.
* Capacitance between conductors
** Capacitance between one conductor and other conductors connected to shield
last revision: 2016-04-12 10:44:06.

Electrical Metallic Tubing (EMT) and True Color™ EMT

Columbia-MBF™
A PART OF atkore INTERNATIONAL

E-Z Pull™ EMT

- Hot galvanized steel using patented inline Flo-Coat® process for long lasting exterior protection
- E-Z Pull interior coating provides a smooth raceway for fast, easier wire-pulling
- Excellent mechanical protection for conductors
- Ductility for faster and easier bending
- Optimal EMI shielding characteristics
- Listed to Underwriters Laboratories Safety Standard UL 797
- Manufactured in accordance with ANSI C80.3
- Available in sizes 1/2 (16) - 4 (103)

Quality Electrical Metallic Tubing

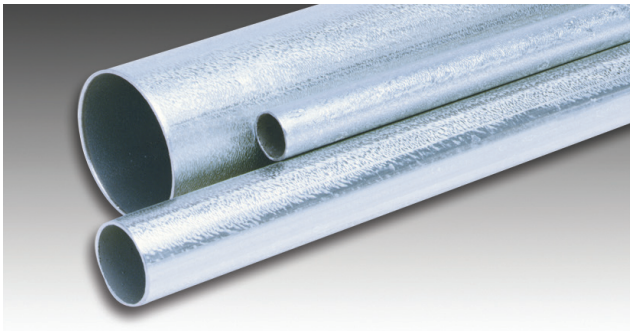

True Color™ EMT

- All the benefits of E-Z Pull EMT
- Instant identification of multiple circuits
- Fire Alarm® Red EMT
- Healthcare Green EMT
- Data Com Blue EMT
- Available in 8 colors
- Available in sizes 1/2 (16) - 4 (103)

Identify Important Circuits Instantly!



True Color™ Applications

Black EMT
- Blends in dark colored areas

Fire Alarm® EMT
- Emergency circuits
- Fire alarm and Security systems

Orange EMT
- Construction/research areas
- Fiber optic systems
- Auto repair/maintenance

Yellow EMT
- High voltage wiring
- Caution areas
- Special equipment

Green EMT
- Hospital and healthcare areas
- Nurse call stations
- Critical circuits

Blue EMT
- Low voltage wiring
- Data com/video
- Network security

Purple EMT
- Specialty wiring systems
- Security systems

White EMT
- Blends in light colored areas

Silver EMT
- Standard Use
- Contemporary architecture







Project Information

Company Name: _____
Address: _____
City: _____
State & Zip: _____
Phone: _____
Project Name: _____
City: _____
State: _____

NOTE: Special orders are non-cancelable, non-returnable and non-refundable

Electrical Metallic Tubing (EMT) and True Color™ EMT

Columbia-MBF™
A PART OF atkore INTERNATIONAL

FEATURES & SPECIFICATIONS

Manufactured for Long Life

Columbia-MBF® EMT is precision manufactured from high grade mild strip steel for exceptional durability and long-lasting life. Columbia-MBF EMT is hot galvanized using a patented inline Flo-Coat™ process. This process combines zinc, a conversion coating, and a clear organic polymer topcoat to form a triple layer of protection against corrosion and abrasion.

E-Z Pull™ EMT combines strength with ductility, providing easy bending, cutting and joining while resisting flattening, kinking and splitting. Available in sizes 1/2 (16) - 4 (103).

Coatings

Columbia-MBF's EMT (Electrical Metallic Tubing) has a special low friction ID coating called E-Z Pull that greatly improves the slip properties between conduit and wire. With E-Z Pull EMT, wire pulls through the EMT smoothly and easily, making installation easier and faster.

EMI Shielding

Columbia-MBF EMT is very effective in reducing electromagnetic field levels for encased power distribution circuits, shielding computers and other sensitive electronic equipment from the effects of electromagnetic interference.

For more information on EMT shielding, visit www.columbia-mbf.ca to obtain the **GEMI** (**G**rounding and **E**lectro-**M**agnetic **I**nterference) software analysis program.

Codes & Standards Compliance

Columbia-MBF EMT is Certified to Canadian Standards Association C22.2 No.83.1. As a metal raceway, EMT functions as an equipment bonding conductor when installed in compliance with the Canadian Electrical Code (CEC), including Section 10 *Grounding and Bonding* and Section 12-1400 *Electrical Metallic Tubing*. Documentation is available in the GEMI (Grounding and Electro-Magnetic Interference) analysis software and related research studies found at the www.columbia-mbf.ca website.

Installation of EMT shall be in accordance with the Canadian Electrical Code and the CSA Certification information.

Specification Data

To specify Columbia-MBF EMT, include the following: Electrical Metallic Tubing shall be equal to that manufactured by Columbia-MBF Inc. EMT shall be hot galvanized steel O.D. with an organic corrosion resistant I.D. coating, and shall be CSA Certified to Standard C22.2 No. 83.1 and manufactured in accordance with ANSI C80.3.

Electrical Metallic Tubing (EMT) and True Color™ EMT

Certified to Canadian Standards Association Safety Standard CSA C22.2 No.83.1
Manufactured in accordance with ANSI C80.3

Trade Size	Metric Designator	Outside Diameter[1]		Nominal Wall Thickness[2]		Approximate Weight Per 100 Ft. (30.5M)		Standard Bundle Quantity		True Color** Bundle Qty.	
		in	mm	in	mm	lb	kg	ft	m	ft	m
1/2	16	0.706	17.93	0.042	1.07	30	13.6	2500	762.0	3500	1066.8
3/4	21	0.922	23.42	0.049	1.24	46	20.9	2000	609.6	2500	762.0
1	27	1.163	29.54	0.057	1.45	67	30.4	1000	304.8	1500*	457.2
1-1/4	35	1.510	38.35	0.065	1.65	101	45.8	500	152.4	2000	609.6
1-1/2	41	1.740	44.20	0.065	1.65	116	52.6	500	152.4	1500	457.2
2	53	2.197	55.80	0.065	1.65	148	67.1	510	155.4	1200	365.7
2-1/2	63	2.875	73.03	0.072	1.83	216	98.0	250	76.2	610	185.9
3	78	3.500	88.90	0.072	1.83	263	119.3	200	61.0	510	155.4
3-1/2	91	4.000	101.60	0.083	2.11	349	158.3	100	30.5	370	112.7
4	103	4.500	114.30	0.083	2.11	393	178.3	100	30.5	300	91.5

1.2

[1]Outside diameter tolerances: +/- .005 in. (.13mm) for size 1/2 (16mm) through 2 (53mm);
+/- .010 in. (.25mm) for size 2-1/2 (63);
+/- .015 in. (.38mm) for size 3 (78);
+/- .020 in. (.50mm) for size 3-1/2 (91) and 4 (103).
NOTE: Length = 10 ft. (3.05m) with a tolerance of +/- .25 in. (6mm)
[2]For information only. Not a requirement of the CSA standard.

*True Color Blue size 1 (27) bundle quantity: 3000 ft / (914.4m)
** True Color Size 2 (53)- 4 (103) are available through special order

NOTE: Special orders are non-cancelable, non-returnable and non-refundable

6560 Northwest Drive, Mississauga, Ontario L4V 1P2
Phone / 905.362.0180 • Toll-Free / 866.632.0180
www.columbia-mbf.ca

Electrical Metallic Tubing (EMT) Elbows

Columbia-MBF™
A PART OF atkore INTERNATIONAL

EMT 90° Elbows

Certified to Canadian Standards Association Safety Standard CSA C22.2 No.83.1
Manufactured in accordance with ANSI C80.3

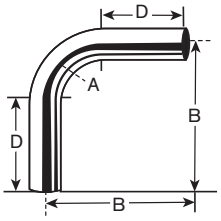

Trade Size	Metric Designator	Radius (A)[1]		Offset (B)[2]		Straight (D)[1]		Approximate Weight Per 100 Pieces		Standard Package
		in	mm	in	mm	in	mm	lb	kg	
1/2	16	4	102	5 7/8	149	1 1/2	38	25	11.3	25
3/4	21	4 1/2	114	7	178	1 1/2	38	46	20.9	50
1	27	5 3/4	146	8 3/4	222	1 7/8	48	84	38.1	25
1 1/4	35	7 1/4	184	10 1/8	257	2	51	144	65.3	20
1 1/2	41	8 1/4	210	11 3/4	298	2	51	193	87.5	15
2	53	9 1/2	241	14	356	2	51	296	134.3	10
2 1/2	63	10 1/2	267	16 1/4	413	3	76	504	228.6	80
3	78	13	330	18 3/4	476	3 1/8	79	701	318.0	50
3 1/2	91	15	381	21 1/4	540	3 1/4	83	1047	474.9	50
4	103	16	406	23 3/8	594	3 3/8	86	1310	594.2	36

[1]Minimum requirement as per CSA Standard
[2]For information only, not a requirement as per CSA Standard
Sizes 2-1/2 (63) and larger shipped in palletized cartons or bulk.
Also available in the following Degrees (60°, 45°, 30°, 22-1/2°, 15° & 11-1/4°)

EMT 45° Elbows

Certified to Canadian Standards Association Safety Standard CSA C22.2 No.83.1
Manufactured in accordance with ANSI C80.3

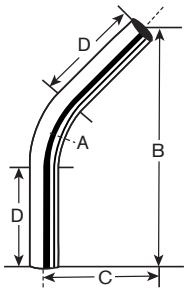

Trade Size	Metric Designator	Radius (A)[1]		Offset (B)[2]		Offset (C)[2]		Straight (D)[1]		Approximate Weight Per 100 Pieces		Standard Package
		in	mm	in	mm	in	mm	in	mm	lb	kg	
1/2	16	4	102	6 1/8	156	2 1/2	64	1 1/2	38	18	8.2	25
3/4	21	4 1/2	114	7 3/8	187	3 1/8	79	1 1/2	38	33	15.0	50
1	27	5 3/4	146	8 3/4	222	3 5/8	92	1 7/8	48	56	25.4	25
1 1/4	35	7 1/4	184	10 1/8	257	4 1/8	105	2	51	97	44.0	20
1 1/2	41	8 1/4	210	13 1/8	333	5 3/8	137	2	51	145	65.8	15
2	53	9 1/2	241	13 1/8	333	5 1/2	140	2	51	185	83.9	10
2 1/2	63	10 1/2	267	17 1/2	445	7 1/4	184	3	76	360	163.3	80
3	78	13	330	17 1/2	445	7 1/4	184	3 1/8	79	438	198.7	50
3 1/2	91	15	381	26 1/8	664	10 7/8	276	3 1/4	83	873	396.0	50
4	103	16	406	26 1/4	667	10 7/8	276	3 3/8	86	983	445.9	36

[1]Minimum requirement as per CSA Standard
[2]For information only, not a requirement as per CSA Standard
Sizes 2-1/2 (63) and larger shipped in palletized cartons or bulk.
Also available in the following Degrees (90°, 60°, 30°, 22-1/2°, 15° & 11-1/4°)

NOTE: Special orders are non-cancelable, non-returnable and non-refundable

6560 Northwest Drive, Mississauga, Ontario L4V 1P2
Phone / 905.362.0180 • **Toll-Free /** 866.632.0180
www.columbia-mbf.ca

Electrical Metallic Tubing (EMT) Elbows

Columbia-MBF™
A PART OF atkore INTERNATIONAL

EMT Large Radius 90° Elbows

Certified to Canadian Standards Association Safety Standard CSA C22.2 No.83.1
Manufactured in accordance with ANSI C80.3

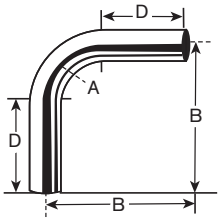

Trade Size	Metric Designator	Radius (A)		Offset (B)[2]		Straight (D)[2]		Approximate Weight Per 100 Pieces	
		in	mm	in	mm	in	mm	lb	kg
1	27	12	305	20 5/8	524	8 5/8	219	201	91.2
1	27	15	381	24 1/4	616	9 1/4	235	235	106.6
1	27	18	457	27 7/8	708	9 7/8	251	268	121.6
1	27	24	610	34 5/8	879	10 5/8	270	329	149.2
1	27	30	762	41	1041	11	279	385	174.6
1	27	36	914	46 3/4	1187	10 3/4	273	436	197.8
1	27	42	1067	54	1372	12	305	503	228.2
1	27	48	1219	60 1/4	1530	12 1/4	311	558	253.1
1 1/4	35	12	305	20 5/8	524	8 5/8	219	303	137.4
1 1/4	35	15	381	24 1/4	616	9 1/4	235	354	160.6
1 1/4	35	18	457	27 7/8	708	9 7/8	251	404	183.3
1 1/4	35	24	610	34 5/8	879	10 5/8	270	497	225.4
1 1/4	35	30	762	41	1041	11	279	581	263.5
1 1/4	35	36	914	46 3/4	1187	10 3/4	273	657	298.0
1 1/4	35	42	1067	54	1372	12	305	758	343.8
1 1/4	35	48	1219	60 1/4	1530	12 1/4	311	842	381.9
1 1/2	41	12	305	20 5/8	524	8 5/8	219	348	157.9
1 1/2	41	15	381	24 1/4	616	9 1/4	235	406	184.2
1 1/2	41	18	457	27 7/8	708	9 7/8	251	464	210.5
1 1/2	41	24	610	34 5/8	879	10 5/8	270	570	258.6
1 1/2	41	30	762	41	1041	11	279	667	302.6
1 1/2	41	36	914	46 3/4	1187	10 3/4	273	754	342.0
1 1/2	41	42	1067	54	1372	12	305	870	394.6
1 1/2	41	48	1219	60 1/4	1530	12 1/4	311	967	438.6
2	53	12	305	20 5/8	524	8 5/8	219	444	201.4
2	53	15	381	24 1/4	616	9 1/4	235	518	235.0
2	53	18	457	27 7/8	708	9 7/8	251	592	268.5
2	53	24	610	34 5/8	879	10 5/8	270	728	330.2
2	53	30	762	41	1041	11	279	851	386.0
2	53	36	914	46 3/4	1187	10 3/4	273	962	436.4
2	53	42	1067	54	1372	12	305	1110	503.5
2	53	48	1219	60 1/4	1530	12 1/4	311	1233	559.3
2 1/2	63	12	305	20 5/8	524	8 5/8	219	648	293.9
2 1/2	63	15	381	24 1/4	616	9 1/4	235	756	342.9
2 1/2	63	18	457	27 7/8	708	9 7/8	251	864	391.9
2 1/2	63	24	610	34 5/8	879	10 5/8	270	1062	481.7
2 1/2	63	30	762	41	1041	11	279	1242	563.4
2 1/2	63	36	914	46 3/4	1187	10 3/4	273	1404	636.9
2 1/2	63	42	1067	54	1372	12	305	1620	734.8
2 1/2	63	48	1219	60 1/4	1530	12 1/4	311	1800	816.5

[2]For information only, not a requirement as per CSA Standard

Chart continued on the next page

Sizes 2-1/2 (63) and larger shipped in palletized cartons or bulk.
Also available in the following Degrees (60°, 45°, 30°, 22-1/2°, 15° & 11-1/4°)

NOTE: Special orders are non-cancelable, non-returnable and non-refundable

6560 Northwest Drive, Mississauga, Ontario L4V 1P2
Phone / 905.362.0180 • Toll-Free / 866.632.0180
www.columbia-mbf.ca

Electrical Metallic Tubing (EMT) Elbows

Columbia-MBF™
A PART OF atkore INTERNATIONAL

EMT Large Radius 90° Elbows (continued)

Certified to Canadian Standards Association Safety Standard CSA C22.2 No.83.1
Manufactured in accordance with ANSI C80.3

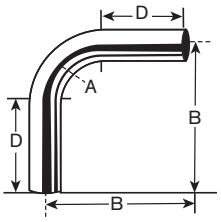

Trade Size	Metric Designator	Radius (A)		Offset (B)[2]		Straight (D) [2]		Approximate Weight Per 100 Pieces	
		in	mm	in	mm	in	mm	lb	kg
3	78	15	381	24 1/4	616	9 1/4	235	921	417.8
3	78	18	457	27 7/8	708	9 7/8	251	1052	477.2
3	78	24	610	34 5/8	879	10 5/8	270	1293	586.5
3	78	30	762	41	1041	11	279	1512	685.8
3	78	36	914	46 3/4	1187	10 3/4	273	1710	775.7
3	78	42	1067	54	1372	12	305	1973	895.0
3	78	48	1219	60 1/4	1530	12 1/4	311	2192	994.3
3 1/2	91	18	457	27 7/8	708	9 7/8	251	1396	633.2
3 1/2	91	24	610	34 5/8	879	10 5/8	270	1716	778.4
3 1/2	91	30	762	41	1041	11	279	2007	910.4
3 1/2	91	36	914	46 3/4	1187	10 3/4	273	2269	1029.2
3 1/2	91	42	1067	54	1372	12	305	2618	1187.5
3 1/2	91	48	1219	60 1/4	1530	12 1/4	311	2908	1319.1
4	103	18	457	27 7/8	708	9 7/8	251	1572	713.1
4	103	24	610	34 5/8	879	10 5/8	270	1932	876.4
4	103	30	762	41	1041	11	279	2260	1025.1
4	103	36	914	46 3/4	1187	10 3/4	273	2555	1158.9
4	103	42	1067	54	1372	12	305	2948	1337.2
4	103	48	1219	60 1/4	1530	12 1/4	311	3275	1485.5

[2]For information only, not a requirement as per CSA Standard
Sizes 2-1/2 (63) and larger shipped in palletized cartons or bulk.
Also available in the following Degrees (60°, 45°, 30°, 22-1/2°, 15° & 11-1/4°)

NOTE: Special orders are non-cancelable, non-returnable and non-refundable

6560 Northwest Drive, Mississauga, Ontario L4V 1P2
Phone / 905.362.0180 • Toll-Free / 866.632.0180
www.columbia-mbf.ca

EMT

Set Screw Fittings

CI5404 (-IT) / CI5408 (-IT)



CI5410 (-IT) / CI5432 (-IT)



c UL us LISTED

Cat. No.		Trade Size (in.)
Regular	Insulated	
EMT Set Screw Fittings (Steel)		
CI5404	CI5404-IT	1/2
CI5406	CI5406-IT	3/4
CI5408	CI5408-IT	1
CI5410	CI5410-IT	1-1/4
CI5412	CI5412-IT	1-1/2
CI5416	CI5416-IT	2
CI5420	CI5420-IT	2-1/2
CI5424	CI5424-IT	3
CI5432	CI5432-IT	4

Concrete-tight

1.3

CI5004 (-IT) / CI5008 (-IT)



CI5010 (-IT) / CI5016 (-IT)



CI5020 (-IT) / CI5032 (-IT)



Cat. No.		Trade Size (in.)
Regular (Zinc)	Insulated (Steel)	
EMT Set Screw Fittings (Zinc)		
CI5004	CI5004-IT	1/2
CI5006	CI5006-IT	3/4
CI5008	CI5008-IT	1
CI5010	CI5010-IT	1-1/4
CI5012	CI5012-IT	1-1/2
CI5016	CI5016-IT	2
CI5020	CI5020-IT	2-1/2
CI5024	CI5024-IT	3
CI5032	CI5032-IT	4

Concrete-tight. Zinc Die Cast Locknut. IT: with insulated throat.

CI5054 / CI5058



Cat. No.	Trade Size (in.)	Offset (in.)
EMT Set Screw Offset Body Fittings (Zinc Alloy)		
CI5054	1/2	3/8
CI5056	3/4	3/4
CI5058	1	3/4

Concrete-tight.

TC121A-FA





Cat. No.		Trade Size (in.)	Std. Pkg. Qty
Regular	Insulated		
EMT / Fire Alarm Set Screw Fittings (Red Steel)			
TC121A-FA	TC721A-FA	1/2	50
TC122A-FA	TC722A-FA	3/4	50
TC123A-FA	TC723A-FA	1	25

EMT

Set Screw Couplings

CI5504 / CI5508



CI5120 / CI5132



CI5104 / CI5116



CI5510 / CI5532



Cat. No.		Trade Size (in.)
Steel	Zinc Alloy	
EMT Set Screw Couplings		
CI5504*	CI5104	1/2
CI5506*	CI5106	3/4
CI5508*	CI5108	1
CI5510*	CI5110	1-1/4
CI5512*	CI5112	1-1/2
CI5516*	CI5116	2
CI5520*	CI5120	2-1/2
CI5524*	CI5124	3
CI5532*	CI5132	4

* cULus Listed only
Concrete-tight

CI5164 / CI5168



Cat. No.	Trade Size (in.)	
	EMT	Rigid
EMT / Rigid Couplings (Zinc Alloy)		
CI5164	1/2	1/2
CI5166	3/4	3/4
CI5168	1	1

Concrete-tight

TK121A-FA





Cat. No.	Trade Size (in.)	Std. Pkg. Qty
EMT / Fire Alarm Set Screw Couplings (Red Steel)		
TK121A-FA	1/2	50
TK122A-FA	3/4	50
TK123A-FA	1	25

EMT

Compression Fittings and Couplings

- Models from 2-1/2 to 4 in. are also suitable for rigid and IMC conduit

TC111A



TC711A



Cat. No.		Trade Size (in.)
Regular	Insulated	
EMT Compression Fittings (Zinc-plated steel)		
TC111A	TC711A	1/2
TC112A	TC712A	3/4
TC113A	TC713A	1
TC114A*	TC714A	1-1/4
TC115A*	TC715A	1-1/2
TC116A*	TC716A	2
TC117A	TC717A	2-1/2
TC118A	TC718A	3
TC119A	TC719A	3-1/2
TC1110A	TC7110A	4

UL FILE NO. E-16592. * O-rings are supplied.
Concrete-tight.

TK111A



Cat. No.	Trade Size (in.)
EMT Compression Couplings (Zinc-plated steel)	
TK111A	1/2
TK112A	3/4
TK113A	1
TK114A	1-1/4
TK115A	1-1/2
TK116A	2
TK117A	2-1/2
TK118A	3
TK119A	3-1/2
TK1110A	4

UL FILE NO. E-16592.
Concrete-tight.

CI5804 (-IT) / CI5832 (-IT)



Zinc Die Cast Locknut
IT: with insulated throat

Cat. No.		Trade Size (in.)
Regular	Insulated	
EMT Compression Fittings (Zinc Alloy)		
CI5804	CI5804-IT	1/2
CI5806	CI5806-IT	3/4
CI5808	CI5808-IT	1
CI5810	CI5810-IT	1-1/4
CI5812	CI5812-IT	1-1/2
CI5816	CI5816-IT	2
CI5820	CI5820-IT	2-1/2
CI5824	CI5824-IT	3
CI5832	CI5832-IT	4

Concrete-tight.

CI5904 / CI5932



Cat. No.	Trade Size (in.)
EMT Compression Couplings (Zinc Alloy)	
CI5904	1/2
CI5906	3/4
CI5908	1
CI5910	1-1/4
CI5912	1-1/2
CI5916	2
CI5920	2-1/2
CI5924	3
CI5932	4

Concrete-tight.

EMT

Wet-location fittings



CI5612-IT-WL





CI5706-WL



CI5620-WL

Specifications

Material: Steel body and steel locknut
Finish: Electro zinc plated
Liner (insulated fittings only): Nylon
Threads: Hub threads (NPS)
Sealing Gasket: Neoprene
Sealing Ring: Nylon
Use: Wet locations, concrete-tight

UL Listed Raintight (File E-16592)
UL514B / CSAC22.2–N°18.3
NEMA FB-1
NEMA 3R

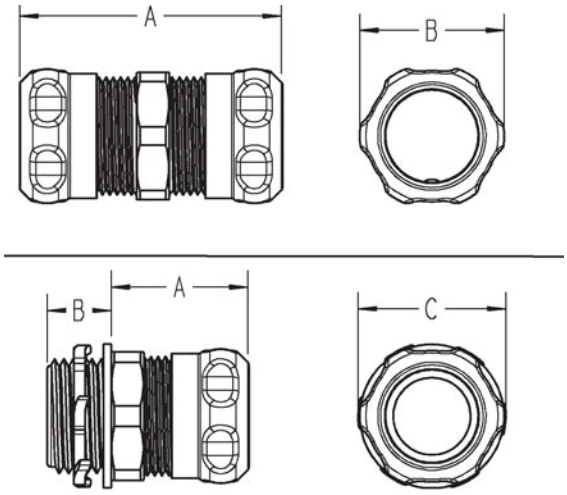

Wet-location EMT compression fittings

Cat. No.	Hub Size (in.)	Dimensions (in.)			Std. Ctn.
		A	B	C	
Non-insulated					
CI5604-WL	½	1.22	0.47	1.14	100
CI5606-WL	¾	1.21	0.48	1.38	50
CI5608-WL	1	1.30	0.50	1.67	25
CI5610-WL	1-¼	1.50	0.60	2.06	25
CI5612-WL	1-½	1.53	0.65	2.27	20
CI5616-WL	2	1.67	0.73	2.77	10
CI5620-WL	2-½	2.77	0.87	3.65	5
CI5624-WL	3	2.75	0.87	4.30	5
CI5632-WL	4	3.12	0.92	5.23	5
Insulated					
CI5604-IT-WL	½	1.22	0.54	1.14	100
CI5606-IT-WL	¾	1.21	0.55	1.38	50
CI5608-IT-WL	1	1.30	0.57	1.67	25
CI5610-IT-WL	1-¼	1.50	0.69	2.06	25
CI5612-IT-WL	1-½	1.53	0.74	2.27	20
CI5616-IT-WL	2	1.67	0.82	2.77	10
CI5620-IT-WL	2-½	2.77	0.99	3.65	5
CI5624-IT-WL	3	2.75	0.99	4.30	5
CI5632-IT-WL	4	3.12	1.04	5.23	5

Wet-location EMT compression couplings

Cat. No.	Hub Size (in.)	Dimensions (in.)			Std. Ctn.
		A	B	C	
CI5704-WL	½	1.94	1.14	–	100
CI5706-WL	¾	2.09	1.38	–	50
CI5708-WL	1	2.31	1.67	–	25
CI5710-WL	1-¼	2.58	2.06	–	25
CI5712-WL	1-½	2.74	2.27	–	20
CI5716-WL	2	2.83	2.77	–	10
CI5720-WL	2-½	4.47	3.65	–	5
CI5724-WL	3	4.70	4.30	–	5
CI5732-WL	4	5.75	5.23	–	5

EMT

Accessories

CI1304 / CI1316



CI1404 / CI1416



CI1520 / CI1532



Cat. No.	Trade Size (in.)	Max. EMT Dia. (in.)	Hole Size (in.)
One Hole EMT Straps (Galvanized Steel)			
CI1304	1/2	0.71	1/4
CI1306	3/4	0.92	1/4
CI1308	1	1.16	5/16
CI1310	1-1/4	1.51	7/16
CI1312	1-1/2	1.74	7/16
CI1316	2	2.20	9/16
Two Hole EMT Straps (Galvanized Steel)			
CI1404	1/2	0.71	3/16
CI1406	3/4	0.92	3/16
CI1408	1	1.16	3/16
CI1410	1-1/4	1.51	1/4
CI1412	1-1/2	1.74	1/4
CI1416	2	2.20	3/8
CI1520	2-1/2	2.88	3/8
CI1524	3	3.50	3/8
CI1528	3-1/2	4.00	1/2
CI1532	4	4.50	1/2

CI5153



CI5154



Cat. No.	Trade Size (in.)		Clamping Range (in.)	
	EMT	Flex.	Min.	Max.
EMT / Flex Couplings (Zinc Alloy)				
CI5153	1/2	3/8	0.17	0.63
CI5154	1/2	1/2	0.75	0.95

CI7538



Cat. No.	Max. Flex. Conduit Dia. (in.)	Hole Size (in.)
One Hole Double Sided Strap (Galvanized Steel)		
CI7538*	1.05	3/16

*Any combination of 3/8 in., 1/2 in. and 3/4 in. EMT, rigid conduit, flexible conduit or teck cables

EMT

Accessories

500-SC / 503-SC

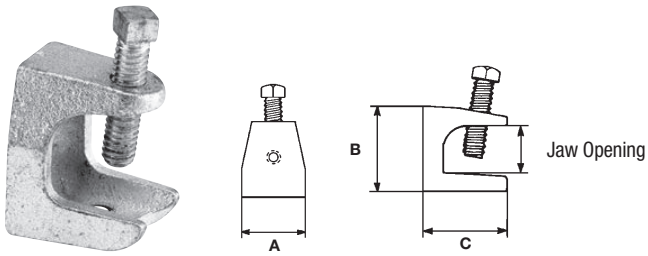

Cat. No.	Trade Size (in.)	Jaw Opening (in.)	Tap Base and Back	Dimensions (in.)		
				A	B	C
Beam Clamps (Malleable Iron)						
500-SC	1/4NC	15/16	1/4-20	1	1-1/4	1-7/16
501	5/16NC	7/8	5/16-18	1-9/16	1-9/16	1-11/16
502	3/8NC	1	3/8-16	2	1-7/8	1-3/4
503-SC	1/2NC	1	1/2-13	2-1/2	2-3/8	2-3/8

CICH-0404 / CICH-3232



Cat. No.	Trade Size (in.)	
	EMT	Rigid
Conduit Hangers-Steel (with nuts & bolts)		
CICH-0404	1/2	1/2
CICH-0606	3/4	3/4
CICH-0808	1	1
CICH-0010	1-1/4	—
CICH-1012	1-1/2	1-1/4
CICH-1200	—	1-1/2
CICH-1616	2	2
CICH-2020	2-1/2	2-1/2
CICH-2424	3	3
CICH-2828	3-1/2	3-1/2
CICH-3232 *	4	4

* Not CSA certified

EMT

Pull Elbows and Conduit Fittings

CI5204 / CI5206



Zinc Die Cast Locknut

CI5304 / CI5306 / CI5308-G / CI5310-G



-G: with gasket.

CICA-1/2 / CICA-2



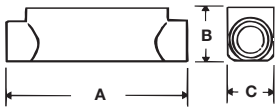

CILBA-1/2 / CILBA-2 / CILBSA-2-1/2 / CILBSA-4



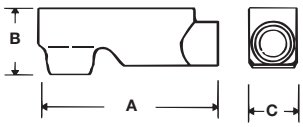

Cat. No.	Trade Size (in.)	Dimensions (in.)		
		A	B	C
Pull Elbows, EMT to Box (Zinc Alloy)				
CI5204	1/2	1-5/16	1-1/8	—
CI5206	3/4	1-1/2	1-1/4	—
Pull Elbows, EMT to EMT (Zinc Alloy)				
CI5304	1/2	1-5/16	15/16	—
CI5306	3/4	1-5/8	1-1/4	—
CI5308-G	1	1-15/16	1-5/8	—
CI5310-G	1-1/4	2-1/4	2	—
EMT Conduit Fittings - "C" Type (Cast Aluminum)				
CICA-1/2	1/2	4-7/8	1-3/8	1-3/8
CICA-3/4	3/4	5-9/16	1-1/2	1-7/16
CICA-1	1	6-1/2	1-3/4	1-3/4
CICA-1-1/4	1-1/4	8-5/8	1-15/16	2-1/2
CICA-1-1/2	1-1/2	8-5/8	2-11/16	2-1/2
CICA-2	2	10-15/16	3	3-3/16
EMT Conduit Fittings - "LB" Type (Cast Aluminum)				
CILBA-1/2	1/2	4-5/16	1-1/2	1-3/8
CILBA-3/4	3/4	4-15/16	1-7/8	1-9/16
CILBA-1	1	6-1/16	2-1/16	1-13/16
CILBA-1-1/4	1-1/4	7-7/8	2-15/16	2-1/2
CILBA-1-1/2	1-1/2	7-7/8	3-1/16	2-1/2
CILBA-2	2	10	3-3/4	3-3/16
CILBSA-2-1/2 *	2-1/2	13	7-3/8	4-1/4
CILBSA-3 *	3	13	7-3/8	4-1/4
CILBSA-3-1/2 *	3-1/2	15-1/4	9	5-1/4
CILBSA-4 *	4	15-1/4	9	5-1/4

Covers and gaskets are included with all aluminum conduit fittings
Types CICA and CILBA are also suitable for use with rigid conduit (NPSM threads)
* For EMT only, not threaded

EMT

Conduit Fittings, Accessories and Entrance Heads

CILRL-1/2 / CILRL-2



Combined LL/LR
Left and right
application

CITA-1/2 / CITA-2



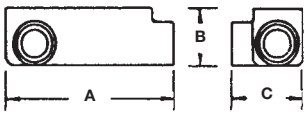

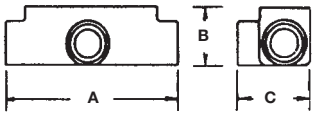

Cat. No.	Trade Size (in.)	Dimensions (in.)		
		A	B	C
EMT Conduit Fittings - "LRL" Type (Cast Aluminum)				
CILRL-1/2	1/2	4-7/16	1-11/16	2-1/8
CILRL-3/4	3/4	5-3/16	1-7/8	2-1/4
CILRL-1	1	6	2-3/16	2-1/2
CILRL-1-1/4	1-1/4	7-15/16	2-3/4	3-1/2
CILRL-1-1/2	1-1/2	7-15/16	3-1/4	3-1/2
CILRL-2	2	10-3/16	3-11/16	4-1/8
EMT Conduit Fittings - "T" Type (Cast Aluminum)				
CITA-1/2	1/2	4-7/8	1-3/8	2-1/16
CITA-3/4	3/4	5-9/16	1-3/4	2-1/8
CITA-1	1	6-1/2	2	2-1/2
CITA-1-1/4	1-1/4	8-11/16	2-5/8	3-1/2
CITA-1-1/2	1-1/2	8-11/16	3	3-9/16
CITA-2	2	10-7/8	3-1/4	4-3/16

Covers and gaskets are included with all aluminum conduit fittings
Types CILRL and CITA are also suitable for use with rigid conduit (NPSM Threads)

CIBC-1/2 / CIBC-2



Cat. No.	Gros. nom. (in.)
Blank Covers for Aluminum Conduit Fittings (Stamped Aluminum)	
CIBC-1/2	1/2
CIBC-3/4	3/4
CIBC-1	1
CIBC-1-1/4	1-1/4
CIBC-2	2

For 1-1/2, use CIBC-1-1/4
Screws not included

CIG-1/2 / CIG-2



Cat. No.	Trade Size (in.)
Gaskets for Aluminum Conduit Fittings (Neoprene)	
CIG-1/2	1/2
CIG-3/4	3/4
CIG-1	1
CIG-1-1/4	1-1/4
CIG-2	2

For 1-1/2, use CIG-1-1/4

CIEFSA-1/2 / CIEFSA-4



Cat. No.	Trade Size (in.)
Service Entrance Heads (Cast Aluminum)	
CIEFSA-1/2	1/2
CIEFSA-3/4	3/4
CIEFSA-1	1
CIEFSA-1 1/4	1-1/4
CIEFSA-1 1/2	1-1/2
CIEFSA-2	2
CIEFSA-2 1/2	2-1/2
CIEFSA-3	3
CIEFSA-3 1/2	3-1/2
CIEFSA-4	4

Consult page D10 for technical specifications

4 in. Square Boxes

Conduit Knockouts



BC52151-K

Concentric knockouts.



CI52151-KSB

Concentric knockouts.

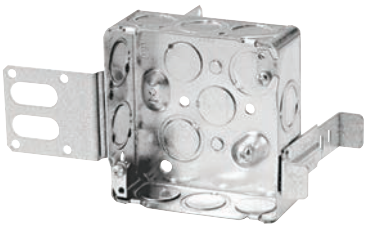

BC52151-KSSX

Concentric knockouts. “Wraparound” bracket for 2-1/2 in. and 3-5/8 in. steel studs. With integral support bracket.



BC53151-K

Concentric knockouts.

Cat. No.	Volume (Cu. in.)	Features		Knockouts			
		Bracket	Raised Ground Screw	1/2 in. sides	1/2 in. bottom	3/4 in. sides	3/4 in. bottom
1-1/2 in. Deep							
BC52151-K	21.0	-	yes	10	4	6	2
CI52151-KSB	21.0	“SB”	yes	8	4	4	2
BC52151-KSSX	21.0	“SSX”	yes	7	4	3	2
BC53151-K	21.0	-	-	10	-	6	-

4 in. Square Boxes

Conduit Knockouts



BC52171-HV-KIT



BC52171-KSSXHVKIT

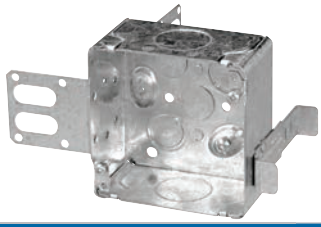

CI52171-1-SSX-1

"Wraparound" bracket for 2-1/2 in. and 3-5/8 in. steel studs.
With integral support bracket.
Present for 2 x 1/2 in. drywall thickness.



CI52171-1



BC52171-K

Concentric knockouts.



CI52171-KSB

Concentric knockouts.

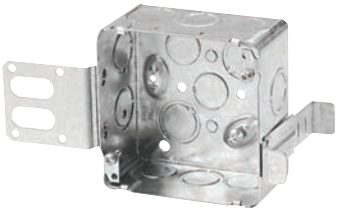

BC52171-KSSX

Concentric knockouts. "Wraparound" bracket for 2-1/2 in. and 3-5/8 in. steel studs.
With integral support bracket.
Present for 1 x 1/2 in. drywall thickness.

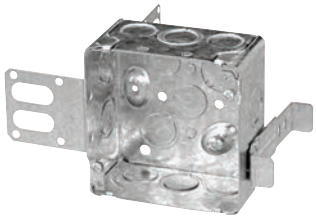

CI52171-KSSX-1

Concentric knockouts. "Wraparound" bracket for 2-1/2 in. and 3-5/8 in. steel studs.
With integral support bracket.
Present for 2 x 1/2 in. drywall thickness.

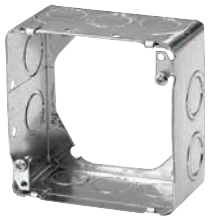

BC53171-K

Concentric knockouts.

Cat. No.	Volume (Cu. in.)	Features		Knockouts				
		Bracket	Raised Ground Screw	1/2 in. sides	1/2 in. bottom	3/4 in. sides	3/4 in. bottom	1 in. sides
2-1/8 in. Deep								
BC52171-HV-KIT	33.6	-	yes	6	-	2	-	-
BC52171-KSSXHVKIT	33.6	"SSX"	yes	6	-	2	-	-
CI52171-1	30.0	-	yes	-	4	-	2	4
CI52171-1-SSX	21.0	"SSX"	yes	-	4	-	2	2
CI52171-1-SSX-1	21.0	"SSX"	yes	-	4	-	2	2
BC52171-K	30.0	-	yes	10	4	6	2	-
CI52171-KSB	30.0	"SB"	yes	8	4	4	2	-
BC52171-KSSX	30.0	"SSX"	yes	7	4	3	2	-
CI52171-KSSX-1	30.0	"SSX"	yes	7	4	3	2	-
BC53171-K	30.0	-	-	10	-	6	-	-

4 in. Square Boxes

Covers



BC52-C-1



BC52-C-6



CI52-C-3



BC52-C-0



CI52-C-10 to CI-52-C-62



BC52-C-0-B

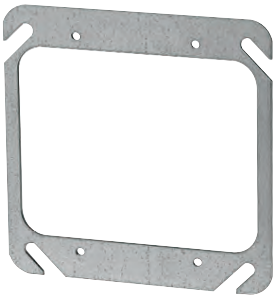

BC52-C-00



BC52-C-17 to CI52-C-18-5/8

Cat. No.	Description
Flat Covers	
BC52-C-1	Blank
BC52-C-6	1/2 in. conduit knockout
Plaster Ring Cover	
CI52-C-3	Raised 1/2 in. (3.4 cu. in.) Tapped ears on 2-3/4 in. centers
Single Device Covers	
BC52-C-0	Flat
BC52-C-0-B	Flat blank cover
CI52-C-10	Raised 1/8 in. (1.0 cu. in.)
BC52-C-13	Raised 1/2 in. (3.6 cu. in.)
CI52-C-14	Raised 3/4 in. (5.7 cu. in.)
CI52-C-14-5/8	Raised 5/8 in. (4.3 cu. in.)
CI52-C-15	Raised 7/8 in. (6.8 cu. in.)
CI52-C-16	Raised 1-1/4 in. (9.5 cu. in.)
CI52-C-62	Raised 1/4 in. (1.8 cu. in.)
Two Device Covers	
BC52-C-00	Flat
BC52-C-17	Raised 1/2 in. (6.2 cu. in.)
CI52-C-18	Raised 3/4 in. (10.3 cu. in.)
CI52-C-18-5/8	Raised 5/8 in. (8.3 cu. in.)

1.4

4 in. Square Boxes

Covers

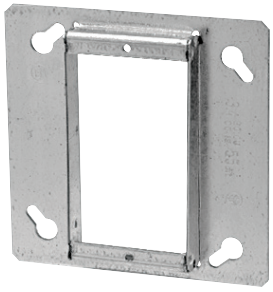

BC52C49-1/2 to CI52-C-51-2

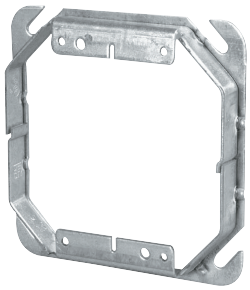

52 C 52 1/2 to 52 C 54 2

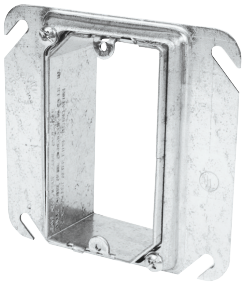

52CADJ

Cat. No.	Description
One Device Square Cornered Tile Covers	
BC52C49-1/2	Raised 1/2 in. (3.4 cu. in.)
BC52C49-3/4	Raised 3/4 in. (5.3 cu. in.)
BC52-C-49-5/8	Raised 5/8 in. (4.3 cu. in.)
BC52-C-49-1	Raised 1 in. (6.8 cu. in.)
CI52-C-49-1 1/4	Raised 1-1/4 in. (8.6 cu. in.)
CI52-C-50-1 1/2	Raised 1-1/2 in. (10.0 cu. in.)
CI52-C-51-2	Raised 2 in. (14.0 cu. in.)
One Device Square Cornered Tile Covers - Adjustable	
52CADJ	Adjustable from 1/2 in. to 1-1/2 in. raise (from 3.4 to 10.0 cu. in.)
Two Device Square Cornered Tile Covers	
52 C 52 1/2	Raised 1/2 in. (6.0 cu. in.)
52 C 52 5/8	Raised 5/8 in. (8.3 cu. in.)
52 C 52 3/4	Raised 3/4 in. (9.0 cu. in.)
52 C 52 1	Raised 1 in. (12.5 cu. in.)
52 C 52 1 1/4	Raised 1-1/4 in. (15.5 cu. in.)
52 C 53 1 1/2	Raised 1-1/2 in. (19.0 cu. in.)
52 C 54 2	Raised 2 in. (25.5 cu. in.)

4 in. Square Boxes

Covers



BC8361 | BC8362 | BC8363

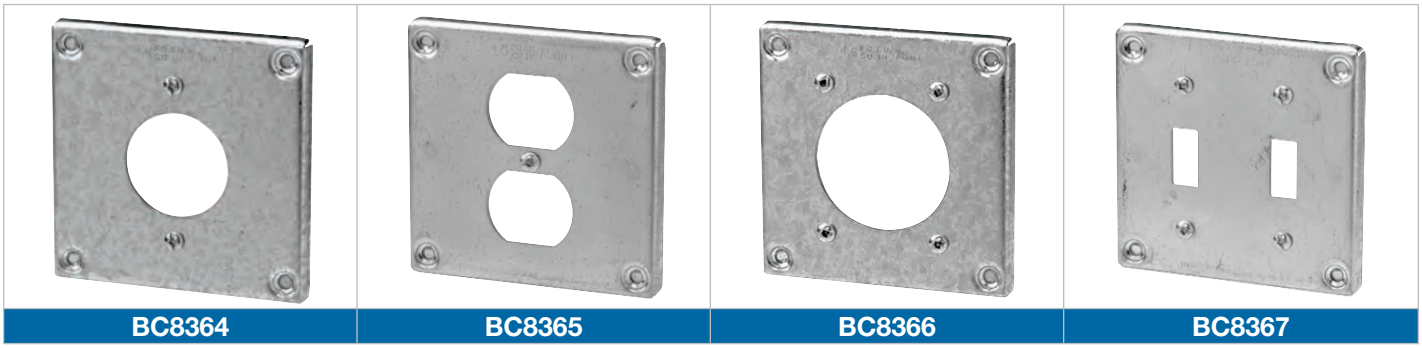

BC8364 | BC8365 | BC8366 | BC8367

Cat. No.	Description
3/8 in. Raised Surface Covers (4.6 cu. in.) **Device Mount**	
BC8361	One toggle switch
BC8362	For 2-5/8 in. diameter 30 / 50 A single receptacle
BC8363	For 1-13/32 in. diameter 15 A single receptacle
BC8364	For 1-19/32 in. diameter 20 / 30 A single locking receptacle
BC8365	One duplex receptacle
BC8366	For 2-9/64 in. diameter 30 A single receptacle
BC8367	Two toggle switches

Complete with device mounting screws

NEMA Configuration							
Cover	A	V	Pole	Wire	Phase	Rec. Dia	NEMA
BC8363	15	125	2	3	1	1.406	5-15R
BC8364	20	125	2	3	1	1.562	L5-20R
BC8364	20	250	2	3	1	1.562	L6-20-R
BC8364	20	347	2	3	1	1.562	L24-20R
BC8364	20	600	2	3	1	1.562	L9-20R
BC8364	20	125/250	3	3	1	1.562	L10-20R
BC8364	20	250	3	3	3	1.562	L11-20R
BC8364	20	125/250	3	4	3	1.562	L14-20R
BC8366	30	125	2	3	1	2.109	5-30R
BC8364	30	125	2	3	1	1.562	L5-30R
BC8366	30	250	2	3	1	2.109	6-30R
BC8364	30	250	2	3	1	1.562	L6-30R
BC8362	30	125/250	3	4	3	2.647	14-30R
BC8362	50	125/250	3	4	1	2.647	14-50R

4 in. Square Boxes

Covers

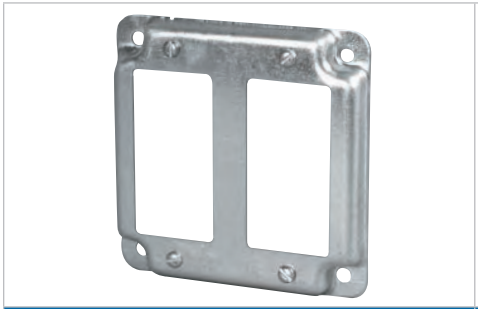
BC8368

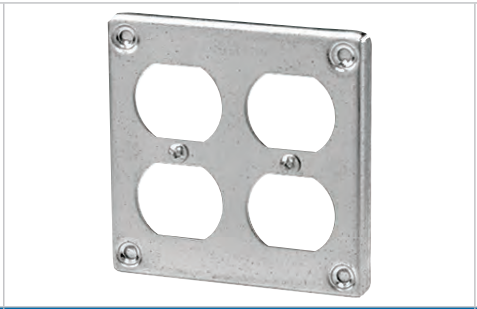
BC8371


BC8375

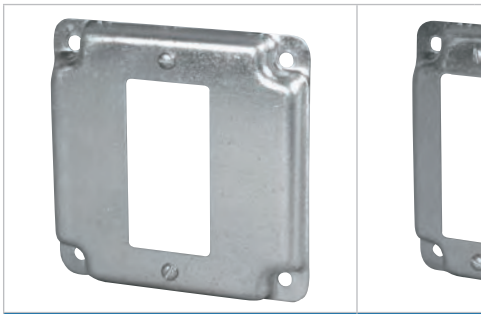
BC8376


BC8377

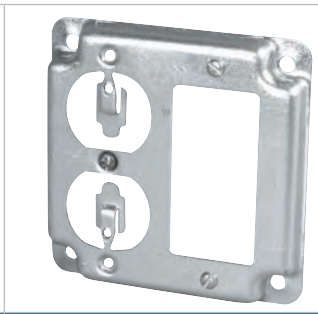
BC8378

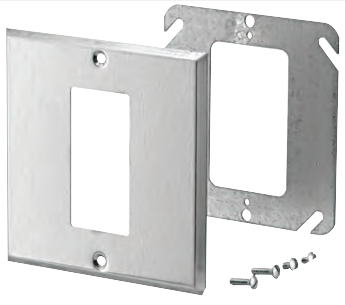
BC97002

Cat. No.	Description
3/8 in. Raised Surface Covers (4.6 cu. in.)	
BC8368	2 Decora/GFCI
BC8371	Two duplex receptacles
BC8375	One toggle switch, one duplex receptacle
BC8376	One Decora/GFCI
BC8377	One toggle switch, one Decora/GFCI
BC8378	One duplex receptacle, one Decora/GFCI
GFCI Conversion Kits (Stainless Steel / Steel)	
BC97002	To install GFCI on 4 in. square boxes. Complete with mounting screws

Complete with device mounting screws
When extra capacity is required, the 8300 Series of 4 in. square covers can be mounted on a 72 Series of 4-11/16 in. square boxes using a CI72-A-52 adaptor. (see page A41)

4 in. Square Boxes

Conduit Knockouts



BC52151-K

Concentric knockouts.



CI52151-KSB

Concentric knockouts.

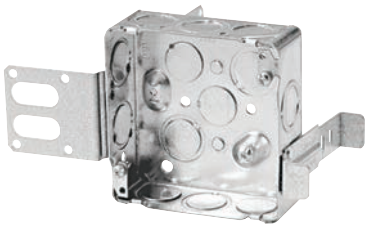

BC52151-KSSX

Concentric knockouts. "Wraparound" bracket for 2-1/2 in. and 3-5/8 in. steel studs. With integral support bracket.



BC53151-K

Concentric knockouts.

Cat. No.	Volume (Cu. in.)	Features		Knockouts			
		Bracket	Raised Ground Screw	1/2 in. sides	1/2 in. bottom	3/4 in. sides	3/4 in. bottom
1-1/2 in. Deep							
1.5 BC52151-K	21.0	-	yes	10	4	6	2
CI52151-KSB	21.0	"SB"	yes	8	4	4	2
BC52151-KSSX	21.0	"SSX"	yes	7	4	3	2
BC53151-K	21.0	-	-	10	-	6	-

4 in. Square Boxes

Conduit Knockouts



BC52171-HV-KIT



BC52171-KSSXHVKIT

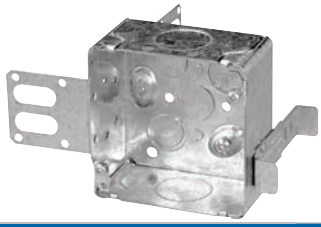

CI52171-1-SSX-1

"Wraparound" bracket for 2-1/2 in. and 3-5/8 in. steel studs.
With integral support bracket.
Present for 2 x 1/2 in. drywall thickness.



CI52171-1



BC52171-K

Concentric knockouts.



CI52171-KSB

Concentric knockouts.

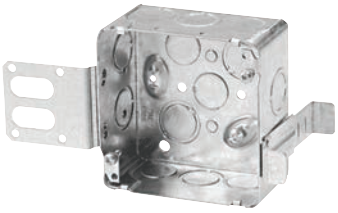

BC52171-KSSX

Concentric knockouts. "Wraparound" bracket for 2-1/2 in. and 3-5/8 in. steel studs.
With integral support bracket.
Present for 1 x 1/2 in. drywall thickness.

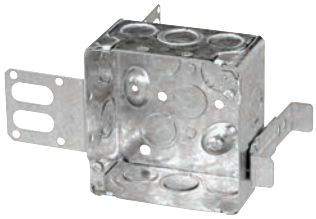

CI52171-KSSX-1

Concentric knockouts. "Wraparound" bracket for 2-1/2 in. and 3-5/8 in. steel studs.
With integral support bracket.
Present for 2 x 1/2 in. drywall thickness.

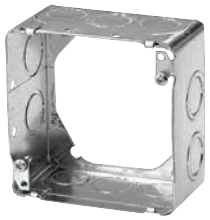

BC53171-K

Concentric knockouts.

Cat. No.	Volume (Cu. in.)	Features		Knockouts				
		Bracket	Raised Ground Screw	1/2 in. sides	1/2 in. bottom	3/4 in. sides	3/4 in. bottom	1 in. sides
2-1/8 in. Deep								
BC52171-HV-KIT	33.6	-	yes	6	-	2	-	-
BC52171-KSSXHVKIT	33.6	"SSX"	yes	6	-	2	-	-
CI52171-1	30.0	-	yes	-	4	-	2	4
CI52171-1-SSX	21.0	"SSX"	yes	-	4	-	2	2
CI52171-1-SSX-1	21.0	"SSX"	yes	-	4	-	2	2
BC52171-K	30.0	-	yes	10	4	6	2	-
CI52171-KSB	30.0	"SB"	yes	8	4	4	2	-
BC52171-KSSX	30.0	"SSX"	yes	7	4	3	2	-
CI52171-KSSX-1	30.0	"SSX"	yes	7	4	3	2	-
BC53171-K	30.0	-	-	10	-	6	-	-

4 in. Square Boxes

Covers



BC52-C-1



BC52-C-6



CI52-C-3



BC52-C-0



CI52-C-10 to CI-52-C-62



BC52-C-0-B

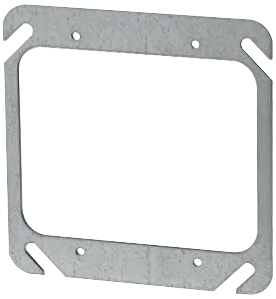

BC52-C-00



BC52-C-17 to CI52-C-18-5/8

Cat. No.	Description
Flat Covers	
BC52-C-1	Blank
BC52-C-6	1/2 in. conduit knockout
Plaster Ring Cover	
CI52-C-3	Raised 1/2 in. (3.4 cu. in.) Tapped ears on 2-3/4 in. centers
Single Device Covers	
BC52-C-0	Flat
BC52-C-0-B	Flat blank cover
CI52-C-10	Raised 1/8 in. (1.0 cu. in.)
BC52-C-13	Raised 1/2 in. (3.6 cu. in.)
CI52-C-14	Raised 3/4 in. (5.7 cu. in.)
CI52-C-14-5/8	Raised 5/8 in. (4.3 cu. in.)
CI52-C-15	Raised 7/8 in. (6.8 cu. in.)
CI52-C-16	Raised 1-1/4 in. (9.5 cu. in.)
CI52-C-62	Raised 1/4 in. (1.8 cu. in.)
Two Device Covers	
BC52-C-00	Flat
BC52-C-17	Raised 1/2 in. (6.2 cu. in.)
CI52-C-18	Raised 3/4 in. (10.3 cu. in.)
CI52-C-18-5/8	Raised 5/8 in. (8.3 cu. in.)

4 in. Square Boxes

Covers

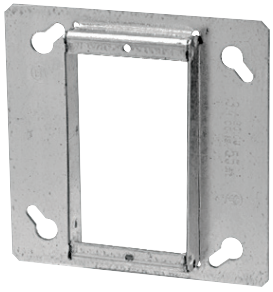

BC52C49-1/2 to CI52-C-51-2

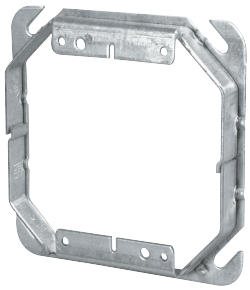

52 C 52 1/2 to 52 C 54 2

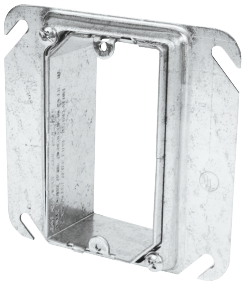

52CADJ

Cat. No.	Description
One Device Square Cornered Tile Covers	
BC52C49-1/2	Raised 1/2 in. (3.4 cu. in.)
BC52C49-3/4	Raised 3/4 in. (5.3 cu. in.)
BC52-C-49-5/8	Raised 5/8 in. (4.3 cu. in.)
BC52-C-49-1	Raised 1 in. (6.8 cu. in.)
CI52-C-49-1 1/4	Raised 1-1/4 in. (8.6 cu. in.)
CI52-C-50-1 1/2	Raised 1-1/2 in. (10.0 cu. in.)
CI52-C-51-2	Raised 2 in. (14.0 cu. in.)
One Device Square Cornered Tile Covers - Adjustable	
52CADJ	Adjustable from 1/2 in. to 1-1/2 in. raise (from 3.4 to 10.0 cu. in.)
Two Device Square Cornered Tile Covers	
52 C 52 1/2	Raised 1/2 in. (6.0 cu. in.)
52 C 52 5/8	Raised 5/8 in. (8.3 cu. in.)
52 C 52 3/4	Raised 3/4 in. (9.0 cu. in.)
52 C 52 1	Raised 1 in. (12.5 cu. in.)
52 C 52 1 1/4	Raised 1-1/4 in. (15.5 cu. in.)
52 C 53 1 1/2	Raised 1-1/2 in. (19.0 cu. in.)
52 C 54 2	Raised 2 in. (25.5 cu. in.)

4 in. Square Boxes

Covers



BC8361 | BC8362 | BC8363

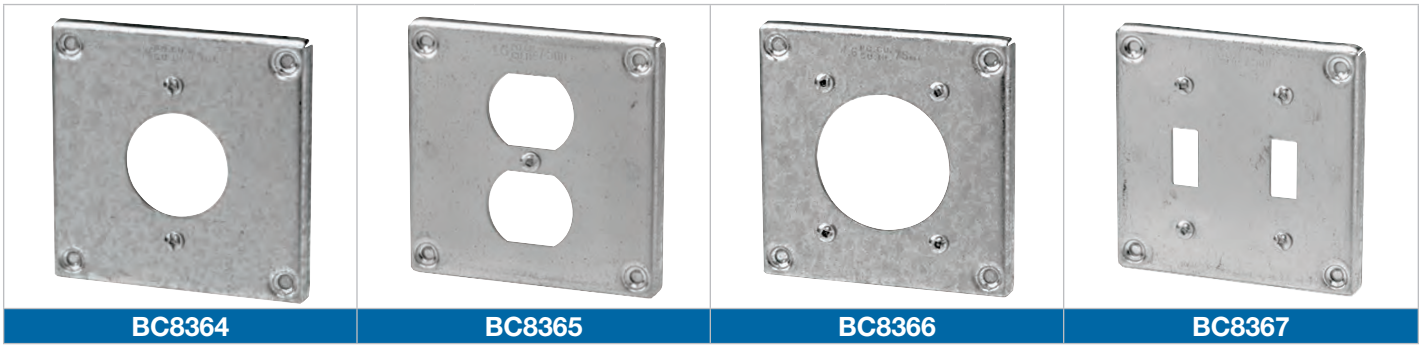

BC8364 | BC8365 | BC8366 | BC8367

Cat. No.	Description
3/8 in. Raised Surface Covers (4.6 cu. in.) **Device Mount**	
BC8361	One toggle switch
BC8362	For 2-5/8 in. diameter 30 / 50 A single receptacle
BC8363	For 1-13/32 in. diameter 15 A single receptacle
BC8364	For 1-19/32 in. diameter 20 / 30 A single locking receptacle
BC8365	One duplex receptacle
BC8366	For 2-9/64 in. diameter 30 A single receptacle
BC8367	Two toggle switches

Complete with device mounting screws

NEMA Configuration							
Cover	A	V	Pole	Wire	Phase	Rec. Dia	NEMA
BC8363	15	125	2	3	1	1.406	5-15R
BC8364	20	125	2	3	1	1.562	L5-20R
BC8364	20	250	2	3	1	1.562	L6-20-R
BC8364	20	347	2	3	1	1.562	L24-20R
BC8364	20	600	2	3	1	1.562	L9-20R
BC8364	20	125/250	3	3	1	1.562	L10-20R
BC8364	20	250	3	3	3	1.562	L11-20R
BC8364	20	125/250	3	4	3	1.562	L14-20R
BC8366	30	125	2	3	1	2.109	5-30R
BC8364	30	125	2	3	1	1.562	L5-30R
BC8366	30	250	2	3	1	2.109	6-30R
BC8364	30	250	2	3	1	1.562	L6-30R
BC8362	30	125/250	3	4	3	2.647	14-30R
BC8362	50	125/250	3	4	1	2.647	14-50R

4 in. Square Boxes

Covers

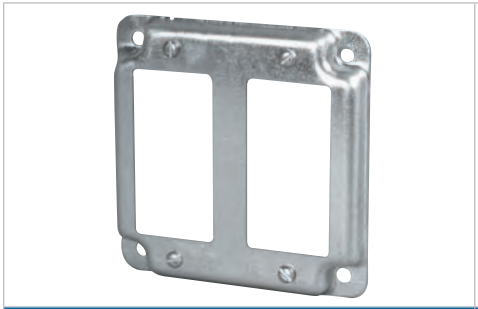
BC8368

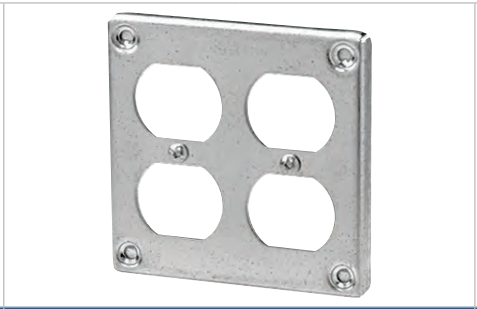
BC8371


BC8375

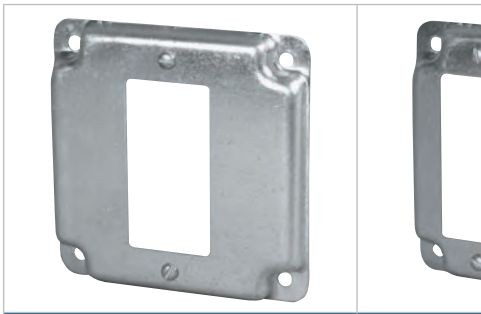
BC8376


BC8377

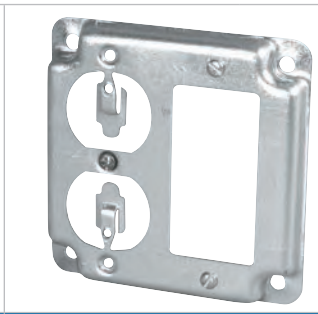
BC8378

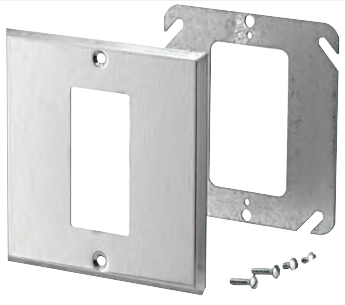
BC97002

Cat. No.	Description
3/8 in. Raised Surface Covers (4.6 cu. in.)	
BC8368	2 Decora/GFCI
BC8371	Two duplex receptacles
BC8375	One toggle switch, one duplex receptacle
BC8376	One Decora/GFCI
BC8377	One toggle switch, one Decora/GFCI
BC8378	One duplex receptacle, one Decora/GFCI
GFCI Conversion Kits (Stainless Steel / Steel)	
BC97002	To install GFCI on 4 in. square boxes. Complete with mounting screws

Complete with device mounting screws
When extra capacity is required, the 8300 Series of 4 in. square covers can be mounted on a 72 Series of 4-11/16 in. square boxes using a CI72-A-52 adaptor. (see page A41)

Utility Boxes and Covers

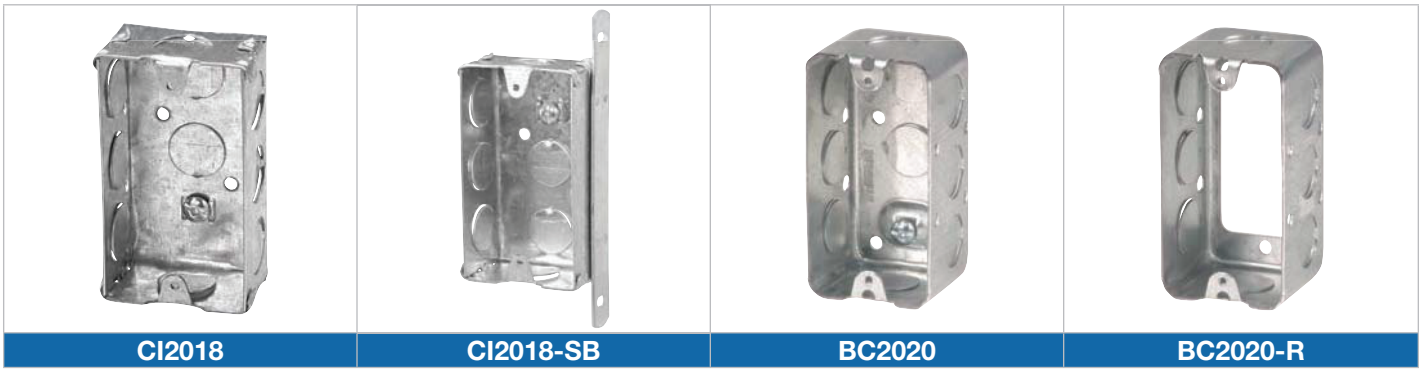

CI2018 | CI2018-SB | BC2020 | BC2020-R

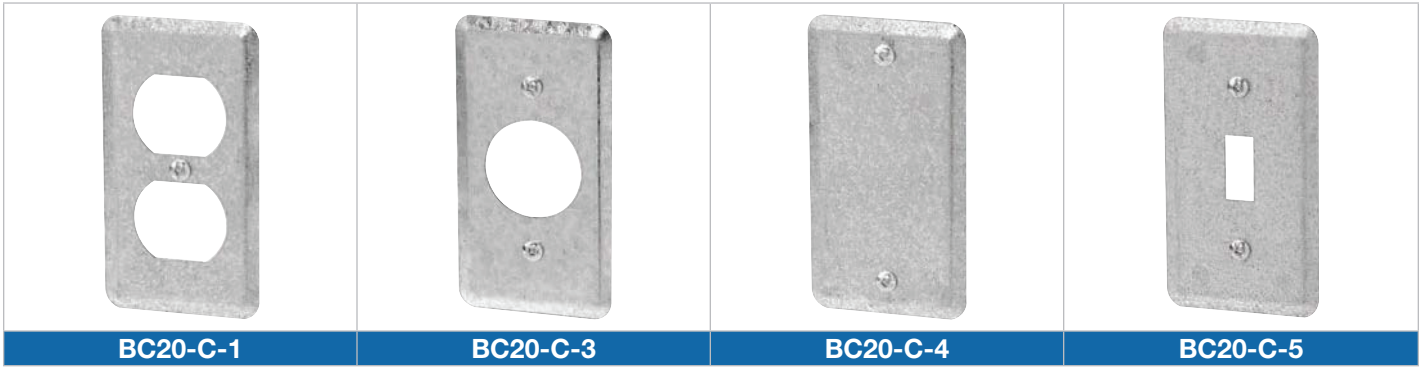

BC20-C-1 | BC20-C-3 | BC20-C-4 | BC20-C-5

Cat. No.	Volume (Cu. in.)	Features		Knockouts		
		Bracket	Raised Ground Screw	1/2 in. ends	1/2 in. bottom	1/2 in. sides
1-1/2 in. Deep — 4 in. x 2-1/4 in.						
CI2018	13.0	-	no	2	2	6
CI2018-SB	13.0	"SB"	no	2	2	3
1-7/8 in. Deep — 4 in. x 2-1/8 in.						
BC2020	14.0	-	yes	2	2	6
BC2020-R	14.0	-	-	2	-	6

Cat. No.	Description
Covers — 20 Series	
BC20-C-1	For duplex receptacle
BC20-C-3	For 1-13/32 in. diameter 15 A single receptacle
BC20-C-4	Blank
BC20-C-5	For toggle switch

1.6

Note: BC2020-R can be installed on CI2018 / BC2020 Series Covers: Device mounting screws included

Utility Boxes and Covers



Cat. No.	Volume (Cu. in.)	Features		Knockouts		
		Bracket	Raised Ground Screw	1/2 in. ends	1/2 in. bottom	1/2 in. sides
1-1/2 in. Deep – 4 in. x 2-1/4 in.						
CI1141	13.0	mounting ears	no	2	2	6
1-7/8 in. Deep – 4 in. x 2-3/8 in.						
BC1110	16.5	-	yes	2	2	6
CI1110-SB	16.5	"SB"	yes	2	2	3
BC1110-R	16.5	-	-	2	-	6
2-1/8 in. Deep – 4 in. x 2-1/2 in.						
1151	18.5	-	yes	2	2	-
1198	18.5	-	yes	2	2	-
1199	18.5	-	yes	2	2	-
1-7/8 in. Deep – 4 in. x 2-3/8 in.						
BC1110-LSKO	16.5	-	yes	2	2	-
BC1110-SSX	16.5	"SSX"	yes	2	2	-

Cat. No.	Description	Cat. No.	Description
Covers – 11 Series			
BC11-C-1	For duplex receptacle	BC11-C-10	Decora/GFCI
BC11-C-2	For 1-19/32 in. diameter 20 A single locking receptacle	CI11-C-10-HV	Decora 347 V
BC11-C-3	For 1-13/32 in. diameter 15 A single receptacle	BC11-C-4-HV	Blank 347 V
BC11-C-4	Blank	BC11-C-5-HV	For toggle switch
BC11-C-5	For toggle switch		

Note: Covers: Device mounting screws included

Câbles armés et conduits flexibles

Connecteurs

CI70



Contre-écrou
en zinc moulé

L-16



Contre-écrou
en zinc moulé

CI71 / CI73

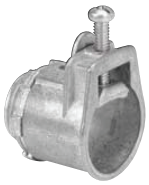

Contre-écrou
en zinc moulé

CI2175



Contre-écrou
en zinc moulé

CI2210 / CI2236



Contre-écrou
en zinc moulé

CI2238 / CI2240



Contre-écrou
en zinc moulé

CI4090



Contre-écrou
en aluminium

1.7

N° de cat.	Grosseur nom. (po)	Gamme de serrage (po)		Applications suggérées	Conduit flexible
		Min.	Max.	AC90 (BX)	
Connecteurs à une vis (alliage de zinc)					
L-16	3/8	0,12	0,63	14/2-10/2-14/3-10/3-14/4-10/4	5/16-3/8
CI70	3/8	0,13	0,70	14/2, 12/2, 10/2, 14/3, 12/3, 10/3, 14/4	3/8
CI71	1/2	0,33	0,95	14/2-10/2; 14/3-10/3; 14/4-8/4	5/16, 3/8, 1/2
CI72	3/4	0,60	1,15	6/2; 8/3-3/3; 8/4-3/4	1/2, 3/4
CI73	1	0,93	1,47	3/3-3/0/3; 2/4-1/4	3/4, 1
Connecteurs doubles (alliage de zinc)					
CI2175	3/8	0,15	0,65	14/2-10/2; 14/3-10/3; 14/4-12/4	3/8
Connecteurs coudés à 90° (alliage de zinc)					
CI2210	3/8	0,40	0,63	14/2-10/2; 14/3-10/3 14/4-12/4	3/8
CI2211	1/2	0,65	0,97	8/2; 8/3; 10/4	1/2
CI2214	3/4	0,77	1,12	1/0/1-4/0/1; 6/2-4/2; 8/3-3/3; 8/4-6/4	3/4
CI2216	1	1,06	1,40	4/0/1-350/1; 2/2; 4/3-2/3; 6/4-4/4	1
CI2218	1-1/4	1,34	1,65	500/1-750/1; 1/3-3/0/3; 1/4-1/0/4	1-1/4
CI2234	1-1/2	1,70	2,15	600/1-1000/1; 2/0/3; 1/4-3/0/4	1-1/2
CI2236	2	1,51	2,47	600/1-1000/1; 2/0/3-400/3; 1/4-4/0/4	1-1/2 - 2
Connecteurs coudés à 90° (aluminium)					
CI2238	2-1/2	2,50	3,08	600/3-750/3	2-1/2
CI2240	3	2,95	3,55	1000/3	3
CI4090	4	4,17	4,62	—	4

Utilisés en emplacements secs, ces connecteurs conviennent également aux câbles ACWU90 de diamètres équivalents. Un connecteur et un contre-écrou non ferreux doivent servir au raccord de câbles à monoconducteur lorsque le courant nominal est de plus de 200 ampères.

REMARQUE: Les connecteurs de grosseur nominale de 3/8 po se posent sur une débouchure de 1/2 po.

Dans l'industrie électrique, les améliorations techniques sont chose de tous les jours. Il en va donc de soi que les fabricants de câbles modifient leurs produits de temps à autre. Pour cette raison, il est fortement recommandé de vérifier la grosseur des câbles auprès du fabricant avant de faire le choix d'un connecteur.

Voir le guide technique pour les dimensions (D38-D39).

Utility Boxes and Covers



CI2018



CI2018-SB



BC2020



BC2020-R

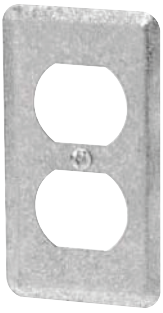

BC20-C-1

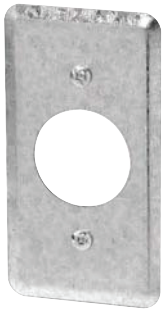

BC20-C-3



BC20-C-4



BC20-C-5

Cat. No.	Volume (Cu. in.)	Features		Knockouts		
		Bracket	Raised Ground Screw	1/2 in. ends	1/2 in. bottom	1/2 in. sides
1-1/2 in. Deep — 4 in. x 2-1/4 in.						
CI2018	13.0	-	no	2	2	6
CI2018-SB	13.0	"SB"	no	2	2	3
1-7/8 in. Deep — 4 in. x 2-1/8 in.						
1.8 BC2020	14.0	-	yes	2	2	6
BC2020-R	14.0	-	-	2	-	6

Cat. No.	Description
Covers — 20 Series	
BC20-C-1	For duplex receptacle
BC20-C-3	For 1-13/32 in. diameter 15 A single receptacle
BC20-C-4	Blank
BC20-C-5	For toggle switch

Note: BC2020-R can be installed on CI2018 / BC2020 Series Covers: Device mounting screws included

Utility Boxes and Covers



Cat. No.	Volume (Cu. in.)	Features		Knockouts		
		Bracket	Raised Ground Screw	1/2 in. ends	1/2 in. bottom	1/2 in. sides
1-1/2 in. Deep – 4 in. x 2-1/4 in.						
CI1141	13.0	mounting ears	no	2	2	6
1-7/8 in. Deep – 4 in. x 2-3/8 in.						
BC1110	16.5	-	yes	2	2	6
CI1110-SB	16.5	"SB"	yes	2	2	3
BC1110-R	16.5	-	-	2	-	6
2-1/8 in. Deep – 4 in. x 2-1/2 in.						
1151	18.5	-	yes	2	2	-
1198	18.5	-	yes	2	2	-
1199	18.5	-	yes	2	2	-
1-7/8 in. Deep – 4 in. x 2-3/8 in.						
BC1110-LSKO	16.5	-	yes	2	2	-
BC1110-SSX	16.5	"SSX"	yes	2	2	-

Cat. No.	Description	Cat. No.	Description
Covers – 11 Series			
BC11-C-1	For duplex receptacle	BC11-C-10	Decora/GFCI
BC11-C-2	For 1-19/32 in. diameter 20 A single locking receptacle	CI11-C-10-HV	Decora 347 V
BC11-C-3	For 1-13/32 in. diameter 15 A single receptacle	BC11-C-4-HV	Blank 347 V
BC11-C-4	Blank	BC11-C-5-HV	For toggle switch
BC11-C-5	For toggle switch		

Note: Covers: Device mounting screws included

Type ABR

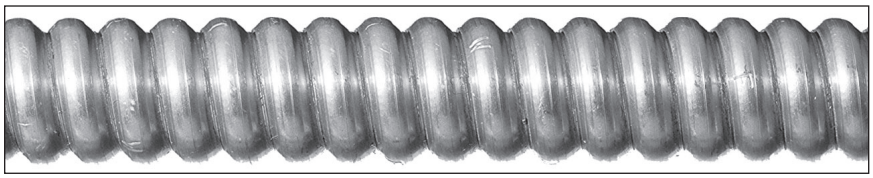

Trade Size (in.)	Cat. No.	Coil Length (m)	Cat. No.	Coil Length (m)	Cat. No.	Coil Length (m)	Cat. No.	Reel Content* (m)	Wt. kg/30m
-	-	-	-	-	**ABR716-30**	30	**ABR716-300**	300	-
3/8	**ABR038-8†**	8	**ABR038-15†**	15	**ABR038-30†**	30	**ABR038-300†**	300	7.0
1/2	**ABR050-8**	8	**ABR050-15**	15	**ABR050-30**	30	**ABR050-300**	300	9.5
3/4	**ABR075-8**	8	**ABR075-15**	15	**ABR075-30**	30	**ABR075-150**	150	13.5
1	-	-	**ABR100-15**	15	-	-	**ABR100-120**	120	24.0
1-1/4	-	-	**ABR125-15**	15	-	-	**ABR125-120**	120	31.0
1-1/2	-	-	**ABR150-8**	8	-	-	**ABR150-90**	90	47.0
2	-	-	**ABR200-8**	8	-	-	**ABR200-45**	45	67.0
2-1/2	-	-	**ABR250-8**	8	-	-		-	92.0
3	-	-	**ABR300-8**	8	-	-		-	107.0
3-1/2	-	-	**ABR350-8**	8	-	-		-	122.0
4	-	-	**ABR400-8**	8	-	-		-	142.0

1.9

See Chart on p.153 for dimensions and tolerances.
** See p.153 for label and packaging detail.*
Note: Dimensions and Bend Radii are identical to Type BR, p. 140.
† CSA Certified.

Type ABR
This non-jacketed flexible aluminum conduit has many universal wiring applications. It is often referred to as "Greenfield" or "Reduced Wall Flex".

Construction
Type ABR is formed using a high strength aluminum alloy strip. The result is a conduit with similar characteristics to those of type BR steel but at about 1/3 the weight.

Applications
General Use:
In accordance with CEC Rule 12-1002 (1) the flexible metal conduit is permitted in or on buildings of either combustible or non-combustible constructions.
Restriction and Exception:
CEC Rule 12-1004 (a) states:"12 (3/8) trade size flexible metal conduit shall be permitted to be used for runs of not more than 1.5 m (5 ft) for the connection of equipment." and CEC Rule 12-1004 (b) states:"12 (3/8) trade size liquidtight flexible conduit may be used as permitted by this code."
Securements with straps:
CEC Rule 12-1010 (3) states: "When flexible metal conduit is installed, it shall be secured at intervals not exceeding 1.5 m (5 ft) and within 300 mm (12 in.) on each side of every outlet box or fitting except where flexible metal conduit is fished and except for lengths of not over 900 mm (3 ft) at terminals where flexibility is necessary."
Conductor fill:
CEC Rule 12-1014 defines the maximum number of conductor, the CEC Tables 6 provides the maximum number of conductors of one size in trade sizes of conduit, CEC Table 8 provides the maximum allowable per cent conduit fill, and CEC Table 9 provides the cross-sectional areas of conduit.
Applications: refer to Type BR, p. 140.

Listing / Certification
Listed. (sizes 3/8 through 3 in.). Conforms to UL Standard ANSI/UL-1 for Flexible Metal Conduit.
Certified. (**3/8 inch size only**). Conforms to CSA 22.2 No. 56 for use per CEC C22.1 Section 12-1300.
Meets Federal Specification WW-C-566c Type II

Type ABRH

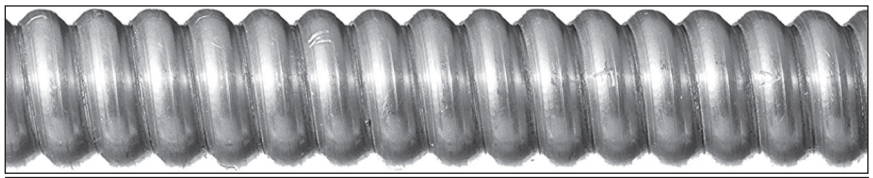

Trade Size	CSA Metric Desig.	T&B Type	Internal Diameter (in.) Min.	Internal Diameter (in.) Max.	Outer Diameter (in.) Min.	Outer Diameter (in.) Max.	Inside Bend Radius	WT. Lbs. per 100 Ft.	Coil Lenght Mtr.
3/8	12	**ABRH038**	0.375	0.393	0.560	0.610	2	7	30, 150, 300
7/16	14	**ABRH716**	0.437	0.457	-	0.675	2.25	8	30, 150, 300
1/2	16	**ABRH050**	0.625	0.645	0.860	0.920	3	16	30, 150, 300
3/4	21	**ABRH075**	0.812	0.835	1.045	1.105	4	18	30, 150, 300
1	27	**ABRH100**	1.000	1.040	1.300	1.380	5	35	15, 120
1-1/4	35	**ABRH125**	1.250	1.300	1.550	1.630	6.2	43	15, 120
1-1/2	41	**ABRH150**	1.500	1.575	1.850	1.950	7.5	55	8, 15, 30
2	53	**ABRH200**	2.000	2.080	2.350	2.454	10	73	8, 15
2-1/2	63	**ABRH250**	2.500	2.700	2.860	3.060	12.5	90	8, 15
3	78	**ABRH300**	3.000	3.200	3.360	3.560	15	107	8, 15
4	103	**ABRH400**	4.000	-	4.360	4.560	20	142	8, 15

TYPE - ABRH
This non-jacketed flexible aluminum conduit has many universal wiring applications.

Construction
Type ABRH is formed from a heavy gauge aluminum strip. Its profile and helical shape allow it to withstand substantial impact and crushing forces.

Applications
This conduit is intended as a metal raceway for wires and cable where CSA Certification is required. Suitable for use with connectors intended for "FMC (Flexible Metal Conduit).

Certified
File # LL 18858 Conforms to CSA 22.2 No. 56 for use per the Canadian Electrical Code C22.1 Section 12-1300.

Rigid PVC Conduit Pipe & Fittings

A system for residential, industrial, commercial and institutional applications.







ROYAL® Electrical Solutions

ROYAL Electrical Solutions

Table of Contents



Product Description - Features and Benefits	1
Installation Guidelines - Solvent Welding Joints	2
Solvent Welding Joints/Pipe Dimensions/Specs	3
Solvent Cementing	4
Expansion and Contraction	5
Setting the Piston Opening	6
Fittings - Bends (Bell End)	7-8
Fittings - Miscellaneous	9-18

Note: This brochure is not intended to assume the authority of the Design Engineer. Actual jobsite conditions will vary significantly. The sole responsibility for all design and installation decisions lies with the Design Engineer. All local health and safety regulations must be followed.

Rigid PVC Conduit Pipe & Fittings

A system for residential, industrial, commercial and institutional applications.

Product Description & Applications

Royal Building Products® Electrical Solutions manufactures a complete line of Rigid PVC Conduit pipe and fittings for electrical applications. Our products are designed to reduce labour and maintenance costs, while offering superior performance.

Products are certified by the Canadian Standards Association (CSA) and Underwriters Laboratories (UL) for use in above and below ground applications. Our Rigid PVC conduit pipe and fittings are available in 12 to 150mm (½- to 6-inch) diameters and 3- or 6-metre (10- or 20-foot) lengths.

Standards and Codes

Royal Electrical Solutions Rigid PVC Conduit pipe and fittings are certified to CSA Standards as noted below. Our Rigid PVC conduit pipe and fittings shall be installed according to the Canadian Electrical Code (CEC) Part I, Rules 12-1100 - 12-1122 and the National Electrical Code (NEC) Article 352.

Pipe	Fittings
C22.2 No. 211.2	C22.2 No. 18.2, 85 (Boxes) No. 40 (Electrical Encl.) No. 42.1 (Covers) No. 85 (Fittings)
UL 651	UL 514C (Boxes) UL 50 (Electrical Encl.) UL 514D (Covers) UL 651 (Fittings)
Conforms to NEMA TC2	





Features and Benefits

Saves Labour

Rigid PVC Conduit pipe and fittings are easy to install, cut and join.

Easy Wire Pulls

The conduit's smooth interior surface reduces friction and prevents damage to wires when pulling wire and conductors for long runs and even through 90° bends.

Lightweight Materials

Rigid PVC Conduit is easier to move and handle because it is approximately one-fifth the weight of steel and half the weight of aluminum.

Approximate Weight Comparison

Size mm (in)	PVC lb/100ft (kg/m)	Aluminum lb/100ft (kg/m)	Steel lb/100ft (kg/m)
12 (½)	16.1 (0.24)	27 (0.40)	79 (1.20)
19 (¾)	21.5 (0.32)	37 (0.55)	105 (1.55)
25 (1)	31.9 (0.47)	53 (0.80)	153 (2.30)
32 (1¼)	43.8 (0.65)	70 (1.05)	201 (3.00)
38 (1½)	52.3 (0.78)	86 (1.30)	249 (3.70)
50 (2)	70.3 (1.05)	116 (1.75)	334 (5.00)
63 (2½)	112.0 (1.61)	183 (2.75)	527 (7.85)
75 (3)	146.7 (2.18)	239 (3.55)	690 (10.25)
90 (3½)	176.4 (2.63)	288 (4.30)	831 (12.40)
100 (4)	208.9 (3.11)	340 (5.10)	982 (14.60)
125 (5)	283.4 (4.22)	465 (6.90)	1,344 (20.40)
150 (6)	368.0 (5.48)	613 (9.10)	1,771 (26.35)

Simplifies Direct Burial

Royal Electrical Solutions Rigid PVC Conduit does not require additional protection for direct burial installations according to the Canadian Electrical Code (CEC) and the National Electrical Code (NEC). Normal construction practices should be followed for trenching and backfill operations.

Non-Conductive

Rigid PVC Conduit is non-conductive.

Long Life

Royal Rigid PVC Conduit and fittings resist acids, alkalis, salt solutions and most other chemicals. (Refer to the Royal Chemical Resistance Guide for detailed information.) There is no risk of corrosion when exposed to naturally corrosive soil conditions, electrochemical or galvanic environments. Royal's Rigid PVC Conduit has achieved sunlight resistance as per the requirements of the Electrical Code.

FT-4 Rating

Rigid PVC Conduit pipe has an FT-4 Rating and can be used in non-combustible construction as per Part 3 of the National Building Code of Canada (NBC).

Installation Guidelines

Cutting

Royal Rigid PVC Conduit can easily be cut with a hacksaw, a fine-toothed handsaw or PVC conduit cutters. For conduit with more than a 50mm (2-inch) diameter, use a mitre box or saw guide to ensure a square cut. Deburr the end using a knife or file.

Bending

It may be necessary to create bends in the field by heating and deforming Rigid PVC Conduit. To accomplish this, the following guidelines should be followed:

• For heating the Rigid PVC Conduit, use a heat gun or some other flameless heat source. Do not use an open flame to heat the conduit. Rigid PVC Conduit must be heated to approximately 127°C (260°F) in order to bend without kinking.

• Heat a length of conduit equal to approximately 10 times the nominal diameter.

• Once the Rigid PVC Conduit has been adequately heated, bend it to the required angle plus 3 extra degrees. The additional angle will accommodate the "spring back" which will occur during cooling.

• After bending of the conduit is completed, immediately cool the bend using water or cold air.

• According to the Canadian Electrical Code (CEC) and the National Electrical Code (NEC), the minimum bending radius for rigid conduit is as shown in the table below.

Nominal Size mm (in)	Min. Radius to Centre of Conduit or Tubing mm (in)
16 (½)	102 (4.016)
21 (¾)	114 (4.489)
27 (1)	146 (5.748)
35 (1¼)	184 (7.244)
41 (1½)	210 (8.268)
53 (2)	241 (9.488)
63 (2½)	267 (10.512)
78 (3)	330 (12.992)
91 (3½)	381 (14.606)
103 (4)	406 (15.984)
129 (5)	610 (24.016)
155 (6)	762 (30.000)





Procedure for Solvent Welding Joints

• Use solvent cement and primer prior to expiration date marked on container.
• Above 0° C ambient temperature, joints may be assembled without the use of primer, provided adequate penetration and softening of the pipe/fitting surface can be achieved with solvent cement alone.

1. Assemble materials for the job, including correct solvent cement, primer and correctly sized applicator.

2. Cut pipe as square as possible using a hand saw and miter box or mechanical saw. Do not use a diagonal cut, as it reduces the bonding area in the joint.

3. If plastic tubing cutters are used, care must be taken to remove any raised bead at the end of the pipe, caused by cutting. A file or reamer may be used to remove the bead.

4. Use a knife, file or reamer to remove burrs from the inside and outside of the pipe end, as these will hinder the integrity of the joint. All sharp edges should be removed from the inside and outside edges of the pipe to prevent the pipe from pushing the solvent cement into the fitting socket, thereby causing a weak spot to form. The pipe end should be chamfered, as shown below.

Chamfered Pipe

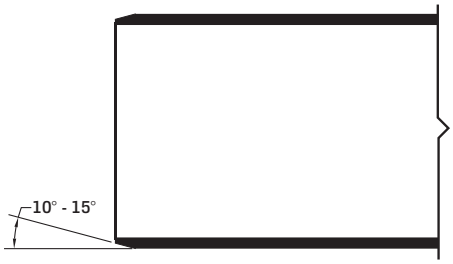

Procedure for Solvent Welding Joints Continued

5. All dirt, grease and moisture should be removed from the pipe and socket by thoroughly wiping with a clean, dry cloth.

6. Dry fit pipe and fitting joints prior to cementing. For proper interference fit, the pipe should go easily into the socket approximately ⅓ to ⅔ of the socket depth. If this is not the case, other pipe or fittings should be used.

7. The applicator should be sized according to the size of pipe and fittings being joined. The brush width of the applicator should be equal to approximately ½ of the pipe diameter.

8. Primer is used to penetrate and soften the surfaces so that they will fuse together under a wide variety of conditions. The penetration or softening can be checked by dragging the edge of a knife or sharp object over the coated surface. If a few thousandths of an inch of the primed surface can be scratched or scraped away, proper penetration has occurred. Varying weather conditions affect priming and cementing action and may require more time or repeated applications to either or both surfaces.

9. If using primer, use the correct applicator size (see #7) and aggressively work the primer into the socket, keeping the surface and applicator wet until the surface has softened, re-dipping the applicator as required. When the surface is primed, remove any puddles of primer from the socket.

10. Aggressively work the primer on to the end of the pipe, to a point ½" beyond the depth of the socket.

11. Perform a second application of primer in the socket.

12. While the surfaces are still wet, the appropriate solvent cement should be applied.

13. Using the correct applicator size, aggressively work a full, even layer of cement onto the pipe end to a point equal to the depth of the socket. Do not brush out to a thin paint type layer, as this will dry within a few seconds.

14. Aggressively work a medium layer of cement into the fitting socket; avoid puddling cement in the socket. On the pipe end, do not coat beyond the socket depth or allow cement to run down into the pipe beyond the socket.

15. Apply a second full, even layer of cement on the pipe.

16. Immediately, while the cement is still wet, assemble the joint. Use enough force to ensure that the pipe is fully inserted into the socket. Twist the pipe a ¼ turn as it is being inserted.

17. Hold the joint together for approximately 30 seconds to avoid push out.

18. After assembly, inspect the joint to ensure that there is a ring or bead of cement completely around the juncture of the pipe and socket. If there are voids in this ring, sufficient cement was not applied and the joint may be defective.

19. Remove the excess cement from the pipe and socket (including the ring or bead) using a cloth. Avoid disturbing or moving the joint.

20. Handle newly cemented joints with care until initial set has taken place. Follow set and cure times before handling or testing the system.

Pipe Dimensions

Nominal Size mm (in)	Avg. Outside Diameter mm (in)	Avg. Inside Diameter mm (in)	Avg. Wall Thickness mm (in)	Approx. Weight lb/100ft (kg/m)
12 (½)	21 (0.840)	15 (0.608)	3 (0.116)	16.1 (0.24)
19 (¾)	27 (1.050)	21 (0.810)	3 (0.120)	21.5 (0.32)
25 (1)	33 (1.315)	26 (1.033)	4 (0.141)	31.9 (0.47)
32 (1¼)	42 (1.660)	35 (1.362)	4 (0.149)	43.8 (0.65)
38 (1½)	48 (1.900)	40 (1.592)	4 (0.154)	52.3 (0.78)
50 (2)	60 (2.375)	52 (2.049)	4 (0.163)	70.3 (1.05)
63 (2½)	73 (2.875)	62 (2.445)	5 (0.215)	112.0 (1.61)
75 (3)	89 (3.500)	77 (3.042)	6 (0.229)	146.7 (2.18)
90 (3½)	102 (4.000)	89 (3.520)	6 (0.240)	176.4 (2.63)
100 (4)	114 (4.500)	102 (3.998)	6 (0.251)	208.9 (3.11)
125 (5)	141 (5.565)	127 (5.017)	7 (0.274)	283.4 (4.22)
150 (6)	168 (6.625)	153 (6.031)	8 (0.297)	368.0 (5.48)

Specification

All wiring shall be installed in Royal Electrical Solutions Rigid PVC Conduit and secured with proper fittings. All conduit and fittings shall be manufactured by Royal Building Products, Pipe & Fittings Solutions. All outlets, pull boxes and junction points shall be Royal products.

Exposed conduit shall be securely attached and supported with straps that are installed at the recommended spacing specified in CEC Section 12-1114. The straps must allow for linear expansion and contraction of the conduit due to temperature change. If the variance in temperature exceeds 14°C (25°F), expansion joints shall be installed according to the manufacturer's recommendations.

If Rigid PVC Conduit is embedded in concrete or direct buried, support straps are not required.

Solvent Cementing

All connections should be made using and applying Royal Electrical Solutions solvent cement.

Set Times

Average Initial Set Times			
Temperature Range	Pipe Sizes ½" to 1¼"	Pipe Sizes 1½" to 2"	Pipe Sizes 2½" to 6"
15°C to 40°C	2 min.	5 min.	30 min.
5°C to 15°C	5 min.	10 min.	2 hrs.
-16°C to 5°C	10 min.	15 min.	12 hrs.

Joint Cure Schedule

Average Joint Cure Times			
Temperature Range During Assembly & Cure Periods	Pipe Sizes ½" to 1¼"	Pipe Sizes 1½" to 2"	Pipe Sizes 2½" to 6"
15°C to 40°C	2 min.	5 min.	30 min.
5°C to 15°C	5 min.	10 min.	2 hrs.
-16°C to 5°C	10 min.	15 min.	12 hrs.

In damp or humid weather allow 50% more cure time.

Estimated Solvent Cement Requirements

Average Number of Joints per Litre of Solvent Cement									
Pipe/Fitting Diameter	½"	¾"	1"	1½"	2"	2½"	3"	4"	6"
Number of Joints	300	200	125	90	60	40	40	30	10

Estimated Primer Requirements

Average Number of Joints per Litre of Primer									
Pipe/Fitting Diameter	½"	¾"	1"	1½"	2"	2½"	3"	4"	6"
Number of Joints	600	400	250	180	120	80	80	60	20

Solvent Cementing in Cold Weather:

- Store pipe and fittings in a heated area. Prefabricate as much of the system as possible in a heated area.
- When not in use, store sealed solvent cement and primer between 5°C and 21°C. Do not use open flame or electric heaters to warm cements and primers.
- Take care to remove moisture, ice and snow from the mating surfaces.

Solvent Cementing in Hot Weather:

- At the time of assembly, the surface temperature of the mating surfaces should not exceed 45°C. Shade or shelter the joint surfaces from direct sunlight for at least 1 hour prior to joining and during the joining process. If necessary, swab the mating surfaces with clean, wet rags to reduce the surface temperature (thoroughly dry surfaces before applying primer or cement).
- Make joints during the cooler early morning hours.
- Apply cement quickly and join pipe to fitting as quickly as possible after applying the cement.
- Keep solvent cement container closed or covered when not in use, to minimize solvent loss.

Solvent Cementing in Wet Conditions:

- Mating surfaces must be dry when the joint is made.
- Work under a cover or canopy to keep rain off pipe and fittings.
- Work quickly after drying the pipe and fitting to avoid condensation.
- Allow a longer cure time before the system is tested or used.

Storage and Handling of Solvent Cement and Primer:

- Solvent cement and primer contain highly flammable solvents. Follow all specific safety precautions provided on container label and Material Safety Data Sheet.
- Keep primer and solvent cement away from heat, sparks and open flame.
- Keep containers tightly closed except when in use.
- Ensure proper ventilation of work area and avoid inhaling solvent vapours.
- Where the possibility of splashing exists, wear proper eye protection or a face shield.
- Avoid contact with skin.

Support Straps

Rigid PVC conduit must be supported with straps when installed in above ground applications. These straps should be installed snugly, while allowing linear movement of the conduit. See the table below for recommended maximum spacing of support straps.

Maximum Recommended Spacing of Support Straps		
Nominal Size mm (in)	CEC Recommended Spacing ft (m)	NEC Recommended Spacing ft (m)
16 (½)	2½ (0.75)	3 (0.91)
21 (¾)	2½ (0.75)	3 (0.91)
27 (1)	2½ (0.75)	3 (0.91)
35 (1¼)	4 (1.20)	5 (1.50)
41 (1½)	4 (1.20)	5 (1.50)
53 (2)	6 (1.80)	5 (1.50)
63 (2½)	6 (1.80)	3 - 6 (1.80)
78 (3)-129 (5)	7 (2.10)	3½ - 5 (2.10)
155 (6)	8 (2.50)	8 (2.50)

Storing Conduit Pipe and Fittings

Store Rigid PVC conduit pipe and fittings at the same temperature. Otherwise they may expand and contract at different rates and become incompatible.

Maximum Operating Temperatures

According to the Canadian Electrical Code (CEC), Rigid PVC conduit is intended for use at a continuous operating temperature of 75°C (167°F). For US applications, our Rigid PVC conduit is rated for use with 90°C wiring, according to the requirements of the NEC.

Ambient Temperatures

Royal Electrical Solutions Rigid PVC Conduit and fittings can be installed in locations with an ambient temperature not exceeding 50°C (122°F).

Expansion Joints

According to the CEC, if the amount of expansion expected due to temperature variance during and after construction is more than 45mm, expansion joints must be used.

Expected Expansion

The coefficient of linear expansion for Rigid PVC conduit is as follows:

3×10^{-5} in (expansion/contraction) / in (pipe length) /°F (change in temperature),

5.4×10^{-5} mm (expansion/contraction)/mm (pipe length)/°C (change in temperature)





Note:

The following chart shows the amount of expansion expected with various pipe lengths/temperature changes. If the Rigid PVC Conduit is installed in an exposed location, 17°C (30°F) should be added to the amount of temperature change (ΔT) due to the effects of radiant heat.

Expansion/Contraction of PVC (mm)

Length of Pipe Run (m)

ΔT (°C)	2	4	6	8	10	12	14	16	18	20
5	0.54	1.08	1.62	2.16	2.70	3.24	3.78	4.32	4.86	5.40
10	1.08	2.16	3.24	4.32	5.40	6.48	7.56	8.64	9.72	10.80
15	1.62	3.24	4.86	6.48	8.10	9.72	11.34	12.96	14.58	16.20
20	2.16	4.32	6.48	8.64	10.80	12.96	15.12	17.28	19.44	21.60
25	2.70	5.40	8.10	10.80	13.50	16.20	18.90	21.60	24.30	27.00
30	3.24	6.48	9.72	12.96	16.20	19.44	22.68	25.92	29.16	32.40
35	3.78	7.56	11.34	15.12	18.90	22.68	26.46	30.24	34.02	37.80
40	4.32	8.64	12.96	17.28	21.60	25.92	30.24	34.56	38.88	43.20
45	4.86	9.72	14.58	19.44	24.30	29.16	34.02	38.88	43.74	48.60
50	5.40	10.80	16.20	21.60	27.00	32.40	37.80	43.20	48.60	54.00

Expansion/Contraction of PVC (in)

Length of Pipe Run (ft)

ΔT (°F)	5	10	15	20	25	30	35	40	45	50
5	0.01	0.02	0.03	0.04	0.05	0.05	0.06	0.07	0.08	0.09
10	0.02	0.04	0.05	0.07	0.09	0.11	0.13	0.14	0.16	0.18
15	0.03	0.05	0.08	0.11	0.14	0.16	0.19	0.22	0.24	0.27
20	0.04	0.07	0.11	0.14	0.18	0.22	0.25	0.29	0.32	0.36
25	0.05	0.09	0.14	0.18	0.23	0.27	0.32	0.36	0.41	0.45
30	0.05	0.11	0.16	0.22	0.27	0.32	0.38	0.43	0.49	0.54
35	0.06	0.13	0.19	0.25	0.32	0.38	0.44	0.50	0.57	0.63
40	0.07	0.14	0.22	0.29	0.36	0.43	0.50	0.58	0.65	0.72
45	0.08	0.16	0.24	0.32	0.41	0.49	0.57	0.65	0.73	0.81
50	0.09	0.18	0.27	0.36	0.45	0.54	0.63	0.72	0.81	0.90

Required Number of Expansion Joints

The following table shows the amount of travel that is available with each trade size of Royal Electrical Solutions Rigid PVC conduit expansion joints:

Part Number	Description in	Travel Allowance mm (in)
REJ10	½" Expansion Joint	102 (4)
REJ15	¾" Expansion Joint	102 (4)
REJ20	1" Expansion Joint	102 (4)
REJ25	1¼" Expansion Joint	102 (4)
REJ30	1½" Expansion Joint	102 (4)
REJ35	2" Expansion Joint	102 (4)
REJ40	2½" Expansion Joint	102 (4)
REJ45	3" Expansion Joint	204 (8)
REJ50	3½" Expansion Joint	204 (8)
REJ55	4" Expansion Joint	204 (8)
REJ60	5" Expansion Joint	204 (8)
REJ65	6" Expansion Joint	204 (8)

The required number of expansion joints can be calculated using the following formula:

$$\#\ \text{Expansion Joints Required} = \frac{\text{Total Expected Amount of Expansion (in)}}{\text{Expansion Joint Travel Allowance (in)}}$$

$$\#\ \text{Expansion Joints Required} = \frac{\text{Total Expected Amount of Expansion (mm)}}{\text{Expansion Joint Travel Allowance (mm)}}$$

The number of expansion joints calculated above should be rounded up to the nearest whole number.

Setting the Piston Opening

Expansion joints must be installed such that they allow for both expansion and contraction of the conduit. The piston of the expansion joint must be set at the correct position to allow for this linear movement. To determine the correct position for the piston at the time and temperature of installation, the following formula should be used:

$$\text{Piston Setting (in)} = \frac{\text{(Max. Temp. (°F) – Install. Temp. (°F))}}{\text{Total Expected Temperature Change (°F)}} \times \left[\text{Expansion Joint Expansion Allow. (in)}\right]$$

$$\text{Piston Setting (mm)} = \frac{\text{(Max. Temp. (°C) – Install. Temp. (°C))}}{\text{Total Expected Temperature Change (°C)}} \times \left[\text{Expansion Joint Expansion Allow. (mm)}\right]$$

Installation Guidelines

• Securely fasten the expansion joint barrel so that it does not shift. Loosely connect the conduit so that it is free to move.

• To function properly, expansion joints should be installed near a fixed point.

• It is better to use more expansion joints than not enough, since problems are difficult to correct after conductors and wires have been pulled through the conduit.

• Ensure that the barrel and piston are aligned and level.

• For vertical installations of expansion joints, install with the piston at the bottom to prevent dirt and water from getting inside the joint and causing it to malfunction.

Installation Example

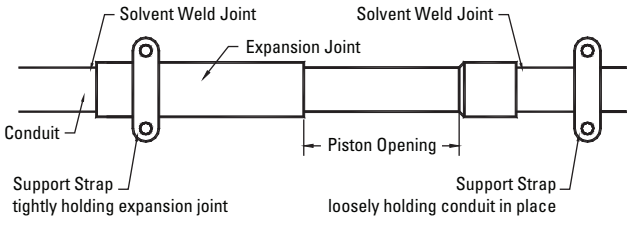

If one expansion joint is required:
Securely fasten the barrel of the expansion joint close to one of the boxes. Support the conduit with straps, but allow free movement of the conduit for expansion and contraction. (See Drawing 1)

If two expansion joints are required:
There are two options available:

1. Firmly fasten one expansion joint near each end of the run and firmly fasten the conduit at the centre. Support the rest of the conduit with straps allowing for movement of the conduit. (See Drawing 2)

2. Firmly fasten the expansion joints back-to-back at the centre of the run. The conduit should be supported with straps to allow free movements as it expands and contracts. (See Drawing 3)

If three or more expansion joints are required:
Evenly space the expansion joints along the run of Rigid PVC conduit. Tightly fasten each expansion joint and support the conduit with straps. Do not restrict the movement of the conduit.

*For information on Maximum Recommended Spacing of Support Straps, see page 4.

Drawings 1 - 4

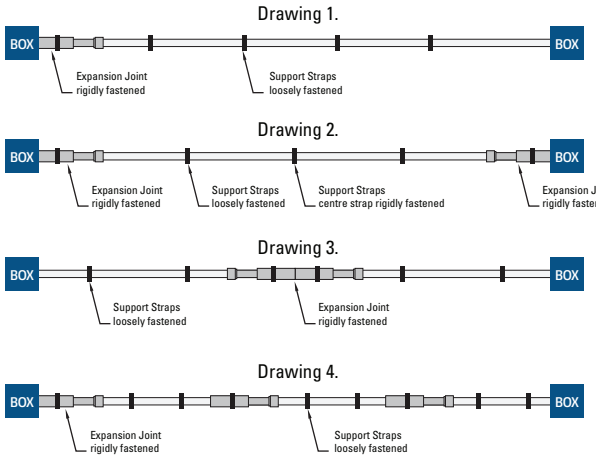

FITTINGS - Bends (Bell Ends)

90° Elbows - Bell End	Sizes (in)	Product Code	UPC Number	Diameter (D) (in)	Length (L) (in)	Radius (R) (in)
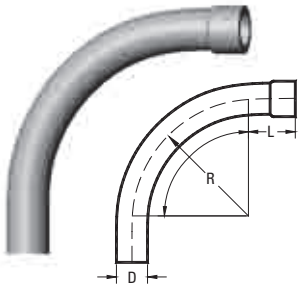	½	REE1090	46120	0.840	1.500	4.00
	¾	REE1590	46150	1.050	1.500	4.50
	1	REE2090	46180	1.315	1.875	5.75
	1¼	REE2590	46210	1.660	2.000	7.25
	1½	REE3090	46240	1.900	2.000	8.25
	2	REE3590	46270	2.375	2.000	9.50
	2½	REE4090	46330	2.875	3.000	10.50
	3	REE4590	46360	3.500	3.125	13.00
	3½	REE5090	46390	4.000	3.250	15.00
	4	REE5590	46420	4.500	3.375	16.00
	5	REE6090	46440	5.565	3.622	24.00
	6	REE6590	46460	6.625	3.740	30.00

45° Elbows - Bell End	Sizes (in)	Product Code	UPC Number	Diameter (D) (in)	Length (L) (in)	Radius (R) (in)
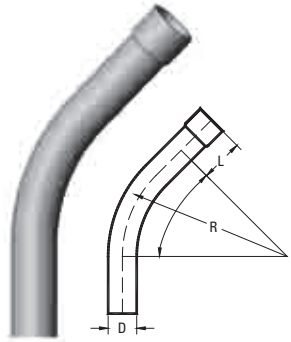	½	REE1045	46120	0.840	1.500	4.00
	¾	REE1545	46150	1.050	1.500	4.50
	1	REE2045	46180	1.315	1.875	5.75
	1¼	REE2545	46210	1.660	2.000	7.25
	1½	REE3045	46240	1.900	2.000	8.25
	2	REE3545	46270	2.375	2.000	9.50
	2½	REE4045	46330	2.875	3.000	10.50
	3	REE4545	46360	3.500	3.125	13.00
	3½	REE5045	46390	4.000	3.250	15.00
	4	REE5545	46420	4.500	3.375	16.00
	5	REE6045	46440	5.565	3.625	24.00
	6	REE6545	46460	6.625	3.750	30.00

30° Elbows - Bell End	Sizes (in)	Product Code	UPC Number	Diameter (D) (in)	Length (L) (in)	Radius (R) (in)
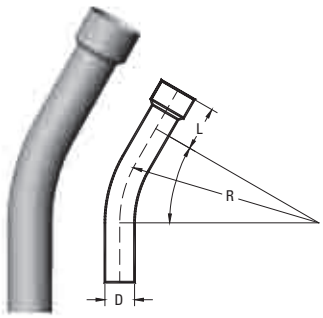	½	REE1030	46100	0.840	1.500	4.00
	¾	REE1530	46130	1.050	1.500	4.50
	1	REE2030	46160	1.315	1.875	5.75
	1¼	REE2530	46190	1.660	2.000	7.25
	1½	REE3030	46220	1.900	2.000	8.25
	2	REE3530	46274	2.375	2.000	9.50
	2½	REE4030	46310	2.875	3.000	10.50
	3	REE4530	46340	3.500	3.125	13.00
	3½	REE5030	46375	4.000	3.250	15.00
	4	REE5530	46400	4.500	3.375	16.00
	5	REE6030	46425	5.565	3.625	24.00
	6	REE6530	46442	6.625	3.750	30.00

Utilities 90° Elbows - Bell End	Sizes (in)	Product Code	UPC Number	Diameter (D) (in)	Length (L) (in)	Radius (R) (in)
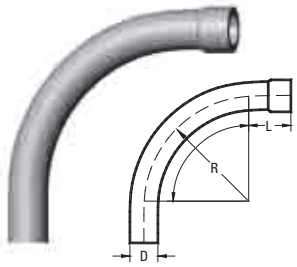	2	REE2-24	46501	2.375	41.20	24.00
	2	REE2-36	46502	2.375	31.70	36.00
	3	REE3-24	46503	3.500	41.20	24.00
	3	REE3-36	46504	3.500	31.70	36.00
	4	REE4-36	46465	4.500	31.70	36.00
	4	REE4-48	46505	4.500	31.70	48.00
	5	REE5-36	46506	5.565	31.70	36.00
	6	REE6-36	46507	6.625	31.70	36.00

Fittings - Bends (Plain Ends)

90° Elbows - Plain End	Sizes (in)	Product Code	UPC Number	Diameter (D) (in)	Length (L) (in)	Radius (R) (in)
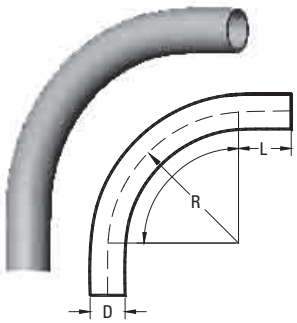	½	REE1090PE	46120	0.840	1.500	4.00
	¾	REE1590PE	46150	1.050	1.500	4.50
	1	REE2090PE	46180	1.315	1.875	5.75
	1¼	REE2590PE	46210	1.660	2.000	7.25
	1½	REE3090PE	46240	1.900	2.000	8.25
	2	REE3590PE	46270	2.375	2.000	9.50
	2½	REE4090PE	46330	2.875	3.000	10.50
	3	REE4590PE	46360	3.500	3.125	13.00
	3½	REE5090PE	46390	4.000	3.250	15.00
	4	REE5590PE	46420	4.500	3.375	16.00
	5	REE6090PE	46440	5.565	3.622	24.00
	6	REE6590PE	46460	6.625	3.740	30.00

45° Elbows - Plain End	Sizes (in)	Product Code	UPC Number	Diameter (D) (in)	Length (L) (in)	Radius (R) (in)
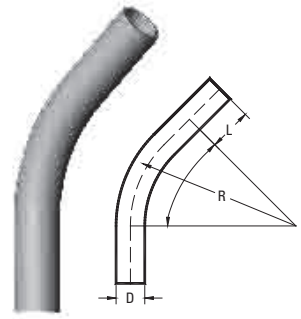	½	REE1045PE	46110	0.840	1.500	4.00
	¾	REE1545PE	46140	1.050	1.500	4.50
	1	REE2045PE	46170	1.315	1.875	5.75
	1¼	REE2545PE	46200	1.660	2.000	7.25
	1½	REE3045PE	46230	1.900	2.000	8.25
	2	REE3545PE	46280	2.375	2.000	9.50
	2½	REE4045PE	46320	2.875	3.000	10.50
	3	REE4545PE	46350	3.500	3.125	13.00
	3½	REE5045PE	46380	4.000	3.250	15.00
	4	REE5545PE	46415	4.500	3.375	16.00
	5	REE6045PE	46430	5.565	3.622	24.00
	6	REE6545PE	46450	6.625	3.740	30.00

30° Elbows - Plain End	Sizes (in)	Product Code	UPC Number	Diameter (D) (in)	Length (L) (in)	Radius (R) (in)
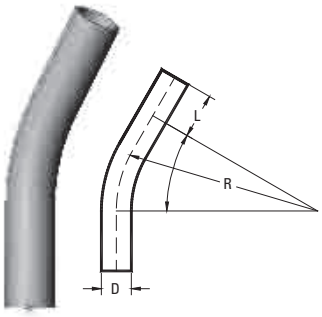	½	REE1030PE	46100	0.840	1.500	4.00
	¾	REE1530PE	46130	1.050	1.500	4.50
	1	REE2030PE	46160	1.315	1.875	5.75
	1¼	REE2530PE	46190	1.660	2.000	7.25
	1½	REE3030PE	46220	1.900	2.000	8.25
	2	REE3530PE	46274	2.375	2.000	9.50
	2½	REE4030PE	46310	2.875	3.000	10.50
	3	REE4530PE	46340	3.500	3.125	13.00
	3½	REE5030PE	46375	4.000	3.250	15.00
	4	REE5530PE	46400	4.500	3.375	16.00
	5	REE6030PE	46425	5.565	3.622	24.00
	6	REE6530PE	46442	6.625	3.740	30.00

45° Elbows - Extended Plain End	Sizes (in)	Product Code	UPC Number	Diameter (D) (in)	Length (L) (in)	Radius (R) (in)
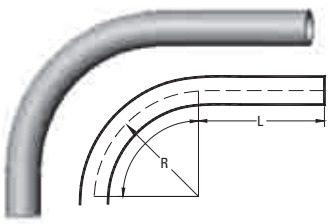	1¼	REE2590E	46125	1.660	14.750	7.25
	1½	REE3090E	46260	1.900	14.750	8.25
	2	REE3590E	43290	2.375	14.750	9.50

Fittings - Couplings and Adapters

Couplings	Sizes (in)	Product Code	UPC Number	Outside Diameter (OD) (in)	Inside Diameter (ID) (in)	Length (L) (in)
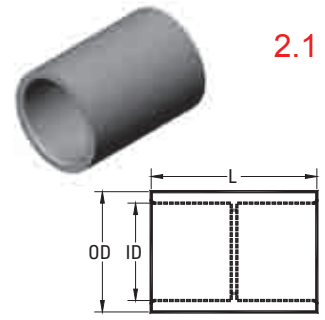 2.1	½	REC10	45950	1.080	0.840	1.437
	¾	REC15	45960	1.300	1.050	1.703
	1	REC20	45970	1.590	1.315	2.031
	1¼	REC25	45980	2.000	1.660	2.156
	1½	REC30	45990	2.230	1.900	2.281
	2	REC35	46000	2.720	2.375	2.406
	2½	REC40	46010	3.320	2.875	3.187
	3	REC45	46020	4.000	3.500	3.437
	3½	REC50	46030	4.500	4.000	3.625
	4	REC55	46060	5.000	4.500	3.750
	5	REC60	46080	6.120	5.565	4.187
	6	REC65	46090	7.370	6.625	4.562

5° Couplings *(*Fabricated)*	Sizes (in)	Product Code	UPC Number	Outside Diameter (OD) (in)	Inside Diameter (ID) (in)	Length (L) (in)
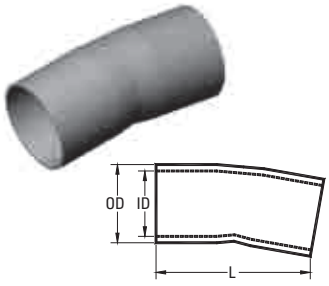	2	R5EC35	46800	2.375	2.049	4.0
	2½	R5EC40	46805	3.500	2.445	5.5
	3	R5EC45	46810	3.500	3.042	6.0
	3½	R5EC50	46815	4.500	3.521	7.0
	4	R5EC55	46820	4.500	3.998	7.0
	5	R5EC60	46825	5.565	5.018	7.5
	6	R5EC65	46830	6.625	6.031	11.0

Terminal Adapters (½" - 1¼" Tapered Thread, 6" NPT)	Sizes (in)	Product Code	UPC Number	A (in)	B (in)	Inside Diameter (ID) (in)	Thread (in)
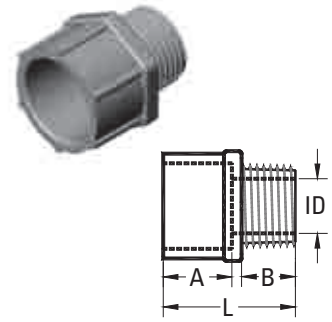	½	RTA10	45730	0.750	0.700	0.591	1.550
	¾	RTA15	45740	1.000	0.675	0.790	1.750
	1	RTA20	45750	1.115	0.625	1.000	1.860
	1¼	RTA25	45760	1.300	0.640	1.311	2.125
	1½	RTA30	45770	1.425	0.725	1.530	2.250
	2	RTA35	45780	1.150	0.800	1.970	2.100
	2½	RTA40	45790	1.900	0.800	2.346	2.930
	3	RTA45	45800	2.000	0.815	2.915	3.055
	3½	RTA50	45810	1.715	1.000	3.385	3.055
	4	RTA55	45820	1.990	0.815	3.850	3.215
	5	RTA60	45830	2.000	1.725	5.015	5.985
	6	RTA65	45840	2.130	1.875	6.025	6.500

Female Adapters (Npt Tapered Thread)	Sizes (in)	Product Code	UPC Number	A (in)	B (in)	Inside Diameter (ID) (in)	Thread (in)
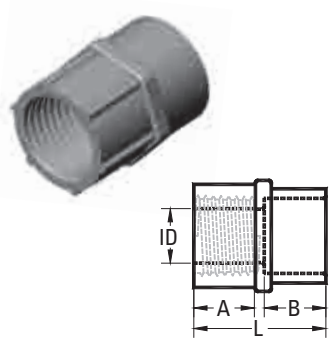	½	RFA10	44990	0.800	0.825	0.620	1.725
	¾	RFA15	45000	0.800	1.000	0.820	1.900
	1	RFA20	45010	1.000	1.200	1.065	2.300
	1¼	RFA25	45020	1.015	1.300	1.395	2.425
	1½	RFA30	45030	1.050	1.290	1.575	2.440
	2	RFA35	45040	1.075	1.375	2.050	2.550
	2½	RFA40	45050	1.675	1.985	2.470	3.760
	3	RFA45	45060	1.630	2.150	3.090	4.100
	3½	RFA50	45070	1.800	2.000	3.540	3.985
	4	RFA55	45080	1.755	2.185	4.025	4.210
	5	RFA60	45090	2.065	3.000	5.035	5.240
	6	RFA65	45100	2.065	3.000	6.045	5.235

Fittings - Expansions Joints, Straps and Meter Accessories

Expansion Joints

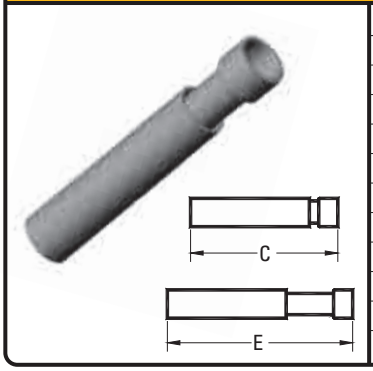

Sizes (in)	Product Code	UPC Number	Expanded Length (E) (in)	Contracted Length (C) (in)	Travel (in)
½	REJ10	44870	12.00	8.00	4.00
¾	REJ15	44880	12.00	8.00	4.00
1	REJ20	44890	12.50	8.50	4.00
1¼	REJ25	44900	13.00	9.00	4.00
1½	REJ30	44910	13.00	9.00	4.00
2	REJ35	44920	13.25	9.25	4.00
2½	REJ40	44930	13.25	9.25	4.00
3	REJ45	44940	22.25	14.25	8.00
3½	REJ50	44950	22.25	14.25	8.00
4	REJ55	44960	22.25	14.25	8.00
5	REJ60	44963	22.25	14.25	8.00
6	REJ65	44966	22.25	14.25	8.00

Expansion Joints

PVC — 2 Hole



Sizes (in)	Product No.	UPC No.
½	RPS10	45540
¾	RPS15	45550
1	RPS20	45560
1¼	RPS25	45570
1½	RPS30	45580
2	RPS35	45590

PVC Coated Steel — 2 Hole



Sizes (in)	Product No.	UPC No.
2	RCS35	44783
2½	RCS40	44784
3	RCS45	44785
3½	RCS50	44786
4	RCS55	44787
5	RCS60	44788
6	RCS65	44789

PVC Coated Steel — 1 Hole



Sizes (in)	Product No.	UPC No.
½	RCS10-1	46850
¾	RCS15-1	46852
1	RCS20-1	46854
1¼	RCS25-1	46856
1½	RCS30-1	46858
2	RCS35-1	46860
2½	RCS40-1	46862
3	RCS10-1	46864
4	RCS10-1	46866

Meter Offsets



Sizes (in)	Product No.	UPC No.
1¼	RM025	45500
2	RM035	45510

Meter Hubs



Sizes (in)	Product No.	UPC No.
1¼	RMHU25	45480
1½	RMHU30	45485
2	RMHU35	45490

Long Meter Offsets *(Fabricated)*



Sizes (in)	Product No.	UPC No.
1¼	RLM025	45472
1½	RML030	45474
2	RML035	45476

Expansion & Deflection Fittings Assembly



Sizes (in)	Product No.	UPC No.
2	RSEJ35	46990
3	RSEJ45	46992
4	RSEJ55	46994

Service Entrance Fittings



Sizes (in)	Product No.	UPC No.
½	REF10	44795
¾	REF15	44800
1	REF20	44810
1¼	REF25	44820
1½	REF30	44830
2	REF35	44840
2½	REF40	44842
3	REF45	44844
3½	REF50	44852
4	REF55	44860

Ecovoc Solvent Cement *(*c/w Screw Cap & Dauber)*



Sizes (in)	Product No.	UPC No.	Carton Qty.
250ml	RVOC250*	54790	24
475ml	RVOC475*	54795	12
950ml	RVOC950*	54797	12
4L	RVOC4L	54799	4

Privoc Solvent Cement *(*c/w Screw Cap & Dauber)*



Sizes (in)	Product No.	UPC No.	Carton Qty.
250ml	RVOCPR250*	54800	24
475ml	RVOCPR475*	54802	12
950ml	RVOCPR950*	54804	12
4L	RVOCPR4L	54806	4

Fittings - Access Fittings

Type C	Sizes (in)	Product Code	UPC Number	A (in)	B (in)	C (in)	D (in)	E (in)
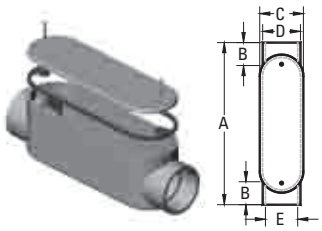	½	RSC10S	46600	5.606	0.639	1.268	1.100	0.840
	¾	RSC20S	46605	5.606	0.810	1.536	1.325	1.050
	1	RSC30S	46610	6.500	0.910	1.700	1.600	1.335
	1¼	RSC40S	46615	7.900	1.050	2.300	2.250	1.100
	1½	RSC50S	46620	8.500	1.125	2.675	2.250	1.900
	2	RSC60S	45605	10.875	1.160	3.188	2.820	2.375
	2½	RSC70S	45606	14.600	1.750	4.500	3.950	2.870
	3	RSC80S	45607	14.600	1.900	4.500	3.950	3.510
	3½	RSC90S	45609	17.040	2.125	5.536	5.000	4.000
	4	RSC100S	45608	17.040	2.125	5.536	5.000	4.530

Type LB	Sizes (in)	Product Code	UPC Number	A (in)	B (in)	C (in)	D (in)	E (in)	F (in)	G (in)	H (in)
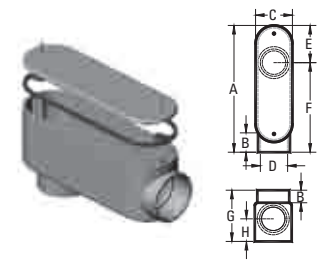	½	RSLB10S	45620	4.337	0.639	1.268	0.840	1.297	4.095	2.487	1.005
	¾	RSLB20S	45630	5.395	0.810	1.536	1.050	1.297	4.095	2.487	1.005
	1	RSLB30S	45640	6.250	0.910	1.700	1.335	1.500	4.750	2.075	1.125
	1¼	RSLB40S	45650	7.625	1.050	2.300	1.100	1.750	5.750	3.575	1.562
	1½	RSLB50S	45660	8.250	1.125	2.675	1.900	1.750	6.500	3.938	1.656
	2	RSLB60S	45670	10.531	1.160	3.188	2.375	2.344	8.156	4.535	1.968
	2½	RSLB70S	45675	13.630	1.750	4.500	2.870	2.733	9.825	6.240	2.610
	3	RSLB80S	45680	13.630	1.900	4.500	3.510	3.805	10.897	6.240	2.610
	3½	RSLB90S	45610	16.000	2.125	5.536	4.000	4.535	11.465	7.500	2.975
	4	RSLB100S	45681	16.000	2.125	5.536	4.530	4.535	11.465	7.500	2.975

Type LL	Sizes (in)	Product Code	UPC Number	A (in)	B (in)	C (in)	D (in)	E (in)	F (in)	G (in)
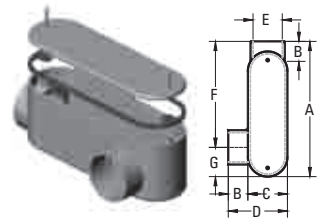	½	RSLL10S	46650	4.337	0.639	1.268	2.487	0.840	4.095	1.297
	¾	RSLL20S	46655	5.395	0.810	1.536	2.487	1.050	4.095	1.297
	1	RSLL30S	46660	6.250	0.910	1.700	2.075	1.335	4.750	1.500
	1¼	RSLL40S	46665	7.625	1.050	2.300	3.575	1.100	5.750	1.750
	1½	RSLL50S	46670	8.250	1.125	2.675	3.938	1.900	6.500	1.750
	2	RSLL60S	45682	10.531	1.160	3.188	4.535	2.375	8.156	2.344
	2½	RSLL70S	45672	13.630	1.750	4.500	6.240	2.870	9.825	3.805
	3	RSLL80S	46674	13.630	1.900	4.500	6.240	3.510	10.897	2.733
	3½	RSLL90S	46678	16.000	2.125	5.536	7.500	4.000	11.465	4.535
	4	RSLL100S	46676	16.000	2.125	5.536	7.500	4.530	11.465	4.535

Type LR	Sizes (in)	Product Code	UPC Number	A (in)	B (in)	C (in)	D (in)	E (in)	F (in)	G (in)
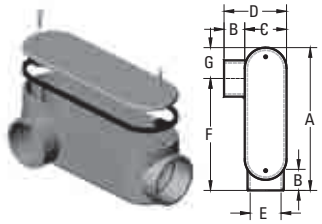	½	RSLR10S	46700	4.337	0.639	1.268	2.487	0.840	4.095	1.297
	¾	RSLR20S	46705	5.395	0.810	1.536	2.487	1.050	4.095	1.297
	1	RSLR30S	46710	6.250	0.910	1.700	2.075	1.335	4.750	1.500
	1¼	RSLR40S	46715	7.625	1.050	2.300	3.575	1.100	5.750	1.750
	1½	RSLR50S	46720	8.250	1.125	2.675	3.938	1.900	6.500	1.750
	2	RSLR60S	45683	10.531	1.160	3.188	4.535	2.375	8.156	2.344
	2½	RSLR70S	46725	13.630	1.750	4.500	6.240	2.870	9.825	3.805
	3	RSLR80S	46728	13.630	1.900	4.500	6.240	3.510	10.897	2.733
	3½	RSLR90S	46738	16.000	2.125	5.536	7.500	4.000	11.465	4.535
	4	RSLR100S	46735	16.000	2.125	5.536	7.500	4.530	11.465	4.535

Fittings - Access Fittings

Type E	Sizes (in)	Product Code	UPC Number	A (in)	B (in)	C (in)	D (in)
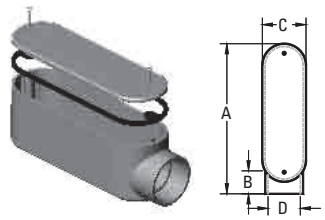	½	RSE10S	46630	4.337	0.639	1.268	0.840
	¾	RSE20S	46632	5.395	0.810	1.536	1.050
	1	RSE30S	46634	6.250	0.910	1.700	1.335
	1¼	RSE40S	46636	7.625	1.050	2.300	1.100
	1½	RSE50S	46638	8.250	1.125	2.675	1.900
	2	RSE60S	46640	10.351	1.160	3.188	2.375
	2½	RSE70S	46642	13.630	1.750	4.500	2.870
	3	RSE80S	46644	13.630	1.900	4.500	3.510
	3½	RSE90S	46648	16.000	2.125	5.536	4.000
	4	RSE100S	46646	16.000	2.125	5.536	4.530

Type T	Sizes (in)	Product Code	UPC Number	A (in)	B (in)	C (in)	D (in)
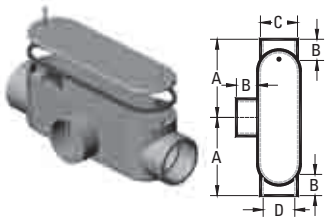	½	RST10S	45690	2.280	0.639	1.100	0.840
	¾	RST20S	45700	2.803	0.810	1.325	1.050
	1	RST30S	45710	3.250	0.910	1.600	1.335
	1¼	RST40S	45720	3.950	1.050	2.250	1.100
	1½	RST50S	45723	4.250	1.125	2.250	1.900
	2	RST60S	45725	5.438	1.160	2.820	2.375
	2½	RST70S	46745	7.300	1.750	3.950	2.870
	3	RST80S	46748	7.300	1.900	3.950	3.510
	3½	RST90S	46752	8.535	2.125	5.000	4.000
	4	RST100S	46750	8.535	2.125	5.000	4.530

Type TB	Sizes (in)	Product Code	UPC Number	A (in)	B (in)	C (in)	D (in)	E (in)	F (in)	G (in)	H (in)
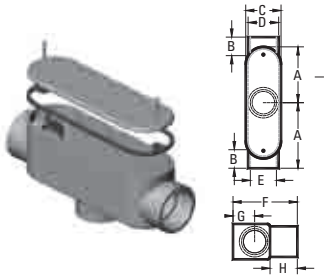	½	RSTB10S	45692	2.280	0.639	1.268	1.100	0.840	2.487	1.005	0.750
	¾	RSTB20S	45702	2.803	0.810	1.536	1.325	1.050	2.487	1.005	0.810
	1	RSTB30S	45712	3.250	0.910	1.700	1.600	1.335	2.075	1.125	1.115
	1¼	RSTB40S	45721	3.950	1.050	2.300	2.250	1.100	3.575	1.562	1.300
	1½	RSTB50S	45724	4.250	1.125	2.675	2.250	1.900	3.938	1.656	1.425
	2	RSTB60S	45727	5.438	1.160	3.188	2.820	2.375	4.535	1.968	1.160
	2½	RSTB70S	46760	7.300	1.750	4.500	3.950	2.870	6.240	2.610	-
	3	RSTB80S	46762	7.300	1.900	4.500	3.950	3.510	6.240	2.610	-
	3½	RSTB90S	46766	8.535	2.125	5.536	5.000	4.000	7.500	2.975	-
	4	RSTB100S	46764	8.535	2.125	5.536	5.000	4.530	7.500	2.975	-

Fittings - Cover Plates

Single Gang Cover Plates - F Series



Description	Product Code	UPC Number
Toggle Switch	RTSC15-10	45845
Duplex Receptacle	RDRC15-10R20	44685
Single Receptacle - 15 Amp	RC15-10R20-3	47035
Single Receptacle - 20 Amp	RC15-10R30-3	47036
Single Receptacle - 30 Amp	RC15-10	47037
Single Blank with Gasket	RBRC15-10	44680
Gasket	GASK15-10	44682

Double Gang Cover Plates - F Series



Description	Product Code	UPC Number
Double Switch	RTSC20-2	45846
Combo Switch/Receptacle	RTSDC20-2	45847
Double Duplex	RDRC20-2	44686
Double Blank with Gasket	RBRC20-2	44681
Gasket	GASK20-2	45949

Triple Gang Cover Plates - F Series



Description	Product Code	UPC Number
Triple Switch	RTSC20-3	45857
Double Switch Receptacle	RDSDR20-3	44689
Double Receptacle/Switch	RTSDC20-3	45858
Triple Receptacle	RDRC20-3	44688
Triple Blank with Gasket	RBRC20-3	44683
Gasket	GASK20-3	45859

Fittings - Weatherproof Cover Plates

Single Gang Weatherproof Cover Plates



RVSC15-10 RVSC15-10 RWTG15-10 RWGF15-10 RWTL RVSC15-10 GASK W

Description	Product Code	UPC Number
Toggle Switch Cover	RVSC15-10	45940
Plunger Switch Cover	RVPT15-10	45930
Toggle	RWTG15-10	45339
Duplex Receptacle	RWDR15-10	45093
Duplex Receptacle - White	RWDR15-10W	45094
Ground Fault Receptacle	RWGF15-10	45095
Ground Fault Receptacle - White	RWGF15-10W	45098
Single Receptacle - 15 Amp	RWTL15	45470
Single Receptacle - 20 Amp	RWTL20	45472
Single Receptacle - 30 Amp	RWTL30	45480
Single Receptacle - 50 Amp	RWTL50	45482
Gasket	GASK W	45484

Double Gang Weatherproof Cover Plates



RVSC20-2 RVSRC20-2 RVSDR20-2 RVSRR20-2 GASK20-2

Description	Product Code	UPC Number
Double Toggle	RVSC20-2	45941
Plunger/GFI	RVSRC20-2	45947
Plunger/Duplex Receptacle	RVSDR20-2	45945
Plunger/Single Receptacle	RVSRR20-2	45948
Gasket	GASK20-2	45949

Fittings - Slab Boxes

Single Gang Boxes - F Series



RFS



RFSS



RFSC



RFSCC

Description	Product Code	UPC Number	Volume (in3)
½" FS	RFS10	45200	17.0
¾" FS	RFS15	45210	17.0
½" FSS	RFSS10	45240	17.5
¾" FSS	RFSS15	45250	17.5
½" FSC	RFSC10	45220	16.3
¾" FSC	RFSC15	45230	16.3
½" FSCC	RFSCC10	45233	17.0
¾" FSCC	RFSCC15	45235	17.0

Single Gang Deep Boxes - FD Series



RFDS



RFDC



BLANK



347 VOLT

Outside Dimensions: Length = 4.5", Width = 6.6", Height = 2.5", except BLANK, L = 4.5", W = 6.6", H = 3.0"

Description	Product Code	UPC Number	Volume (in3)
½" FSC	RFSC3-10	45224	56.0
¾" FSC	RFSC3-15	45232	56.0
1" FSC	RFSC3-20	45228	56.0
½" FS	RFS3-10	45208	54.0
¾" FS	RFS3-15	45218	54.0
1" FS	RFS3-20	45219	54.0
BLANK	RFD-3	45155	73.8

Double Gang Boxes - F Series


FS


FSS


FSC


FSCC


BLANK

Outside Dimensions: Length = 4.5", Width = 4.75", Height = 2.5", except BLANK, L=4.75", W=4.75", H=3.0"

Description	Product Code	UPC Number	Volume (in3)
½" FS	RFS2-10	45205	39.5
¾" FS	RFS2-15	45215	39.5
1" FS	RFS2-20	45216	39.5
½" FSS	RFSS2-10	45242	37.0
¾" FSS	RFSS2-15	45244	37.0
1" FSS	RFSS2-20	45246	37.0
½" FSC	RFSC2-10	45222	37.0
¾" FSC	RFSC2-15	45231	37.0
1" FSC	RFSC2-20	45226	37.0
½" FSCC	RFSCC2-10	45234	36.0
¾" FSCC	RFSCC2-15	45238	36.0
1" FSCC	RFSCC2-20	45239	36.0
BLANK	RFD-D	45150	52.0

Triple Gang Boxes - F Series


FSC


FS


BLANK

Outside Dimensions: Length = 4.5", Width = 6.6", Height = 2.5", except BLANK, L = 4.5", W = 6.6", H = 3.0"

Description	Product Code	UPC Number	Volume (in3)
½" FSC	RFSC3-10	45224	56.0
¾" FSC	RFSC3-15	45232	56.0
1" FSC	RFSC3-20	45228	56.0
½" FS	RFS3-10	45208	54.0
¾" FS	RFS3-15	45218	54.0
1" FS	RFS3-20	45219	54.0
BLANK	RFD-3	45155	73.8

Octagonal Boxes



Size (in)	Product No.	UPC No.
4 x 1½	ROB15/10	45520
4 x 2	ROB20	45525
¾	RKO15	45450
1	RKO20	45455

Octagonal Box Extension Rings



Size (in)	Product No.	UPC No.
1	RXR20	46490
2	RXR35	46495

Junction Boxes With Gasket



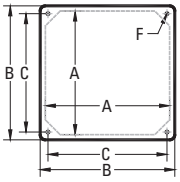



Nominal Size (in)	Product Number	UPC Number	Inside Length & Width (A) (in)	Outside Length & Width (B) (in)	Length Screw to Screw (C) (in)	Outside Height (E) (in)	Inside Height (D) (in)	Screw Size (F)	Volume (in3)
4 x 4 x 2	RJB442	45300	3.675	4.000	3.450	2.125	2.000	8-32	25.4
4 x 4 x 4	RJB444	45310	3.675	4.000	3.450	4.188	3.750	8-32	47.5
4 x 4 x 6	RJB446	45315	3.675	4.000	3.450	6.225	6.000	8-32	76.1
5 x 5 x 2	RJB552	45320	4.680	5.000	4.485	2.000	1.845	8-32	38.7
6 x 6 x 4	RJB664	45330	6.000	6.375	5.813	4.188	4.000	10-32	139.5
6 x 6 x 6	RJB666	45335	6.000	6.375	5.813	6.188	6.000	10-32	209.3
8 x 8 x 4	RJB884	45340	8.075	8.625	7.996	4.230	4.005	¼-20	258.6
8 x 8 x 7	RJB887	45350	8.100	8.625	7.996	7.250	7.035	¼-20	455.6
12 x 12 x 4	RJB12124	45280	12.085	12.580	11.874	4.256	4.030	¼-20	578.3
12 x 12 x 6	RJB12126	45290	12.085	12.580	11.874	6.240	6.025	¼-20	864.6
12 x 12 x 8	RJB12128	45295	12.085	12.580	11.874	8.250	8.025	¼-20	1151.6

Highway Boxes





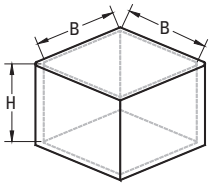

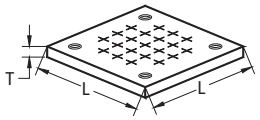

Nominal Size (in)	Product Number	UPC Number	Box Inside Length & Width (B) (in)	Box Inside Depth (H) (in)	Lid Length & Width (L) (in)	Thickness of Lid (T) (in)	Volume (in3)
6 x 6 x 4	H664	47040	6.0	4.25	9.0	0.60	139.5
6 x 6 x 6	H666	47041	6.0	6.25	9.0	0.60	209.3
8 x 8 x 4	H884	47042	8.0	4.25	11.5	0.75	258.6
8 x 8 x 6	H886	47043	8.0	6.25	11.5	0.75	400.0
8 x 8 x 7	H887	47044	8.0	7.25	11.5	0.75	455.6
8 x 8 x 7	H887-A	47045	8.0	7.25	11.5	0.75	418.4

Junction Box Adapters



Size (in)	Product No.	UPC No.
½	RJBA10	45360
¾	RJBA15	45370
1	RJBA20	45380
1¼	RJBA25	45390
1½	RJBA30	45400
2	RJBA35	45410
2½	RJBA40	45420
3	RJBA45	45430
3½	RJBA50	45435
4	RJBA55	45440

Duplex Floor Boxes & Cover (*Includes Leveling Ring)



Size (in)	Product No.	UPC No.
4 x ¾	RFDB4	46980
2 x ¾, 2 x 1	RFDB2	46982
Polycarbonate Bronze Cover	RFDBC	46984

Notes:

Our various pipe and fittings solutions have been manufactured to meet the needs of our customers and their applications. Contact one of the below Sales Centres for more information:

- Municipal Pipe & Fittings Solutions
- Plumbing Pipe & Fittings Solutions
- Electrical Pipe & Fittings Solutions
- Industrial Pipe & Fittings Solutions
- Irrigation Pipe & Fittings Solutions

Sales & Distribution Centres:

Langley, BC, Canada
T/F 1.800.663.0696
F 1.800.663.6564

Woodbridge, ON, Canada
T/F 1.866.769.7473
F 905.856.3986

Laval, QC, Canada
T/F 1.800.465.9754
F 450.688.6624

Distribution Centres:

Calgary, AB, Canada
T/F 1.800.663.0696
F 1.800.663.6564

Winnipeg, MB, Canada
T/F 1.800.663.0696
F 1.800.663.6564

royalelectricalca.com





MIX
Paper from responsible sources
FSC® C003472

E_RCPF_BRV4
Printed 02.2014

ROYAL® Building Products

Pipe & Fittings Solutions | Municipal Plumbing Electrical Industrial Irrigation

Rigid PVC Conduit Pipe & Fittings

A system for residential, industrial, commercial and institutional applications.







ROYAL® Electrical Solutions

ROYAL Electrical Solutions

Table of Contents



Product Description - Features and Benefits	1
Installation Guidelines - Solvent Welding Joints	2
Solvent Welding Joints/Pipe Dimensions/Specs	3
Solvent Cementing	4
Expansion and Contraction	5
Setting the Piston Opening	6
Fittings - Bends (Bell End)	7-8
Fittings - Miscellaneous	9-18

Note: This brochure is not intended to assume the authority of the Design Engineer. Actual jobsite conditions will vary significantly. The sole responsibility for all design and installation decisions lies with the Design Engineer. All local health and safety regulations must be followed.

Rigid PVC Conduit Pipe & Fittings

A system for residential, industrial, commercial and institutional applications.

Product Description & Applications

Royal Building Products® Electrical Solutions manufactures a complete line of Rigid PVC Conduit pipe and fittings for electrical applications. Our products are designed to reduce labour and maintenance costs, while offering superior performance.

Products are certified by the Canadian Standards Association (CSA) and Underwriters Laboratories (UL) for use in above and below ground applications. Our Rigid PVC conduit pipe and fittings are available in 12 to 150mm (½- to 6-inch) diameters and 3- or 6-metre (10- or 20-foot) lengths.

Standards and Codes

Royal Electrical Solutions Rigid PVC Conduit pipe and fittings are certified to CSA Standards as noted below. Our Rigid PVC conduit pipe and fittings shall be installed according to the Canadian Electrical Code (CEC) Part I, Rules 12-1100 - 12-1122 and the National Electrical Code (NEC) Article 352.

Pipe	Fittings
C22.2 No. 211.2	C22.2 No. 18.2, 85 (Boxes) No. 40 (Electrical Encl.) No. 42.1 (Covers) No. 85 (Fittings)
UL 651	UL 514C (Boxes) UL 50 (Electrical Encl.) UL 514D (Covers) UL 651 (Fittings)
Conforms to NEMA TC2	





Features and Benefits

Saves Labour

Rigid PVC Conduit pipe and fittings are easy to install, cut and join.

Easy Wire Pulls

The conduit's smooth interior surface reduces friction and prevents damage to wires when pulling wire and conductors for long runs and even through 90° bends.

Lightweight Materials

Rigid PVC Conduit is easier to move and handle because it is approximately one-fifth the weight of steel and half the weight of aluminum.

Approximate Weight Comparison

Size mm (in)	PVC lb/100ft (kg/m)	Aluminum lb/100ft (kg/m)	Steel lb/100ft (kg/m)
12 (½)	16.1 (0.24)	27 (0.40)	79 (1.20)
19 (¾)	21.5 (0.32)	37 (0.55)	105 (1.55)
25 (1)	31.9 (0.47)	53 (0.80)	153 (2.30)
32 (1¼)	43.8 (0.65)	70 (1.05)	201 (3.00)
38 (1½)	52.3 (0.78)	86 (1.30)	249 (3.70)
50 (2)	70.3 (1.05)	116 (1.75)	334 (5.00)
63 (2½)	112.0 (1.61)	183 (2.75)	527 (7.85)
75 (3)	146.7 (2.18)	239 (3.55)	690 (10.25)
90 (3½)	176.4 (2.63)	288 (4.30)	831 (12.40)
100 (4)	208.9 (3.11)	340 (5.10)	982 (14.60)
125 (5)	283.4 (4.22)	465 (6.90)	1,344 (20.40)
150 (6)	368.0 (5.48)	613 (9.10)	1,771 (26.35)

Simplifies Direct Burial

Royal Electrical Solutions Rigid PVC Conduit does not require additional protection for direct burial installations according to the Canadian Electrical Code (CEC) and the National Electrical Code (NEC). Normal construction practices should be followed for trenching and backfill operations.

Non-Conductive

Rigid PVC Conduit is non-conductive.

Long Life

Royal Rigid PVC Conduit and fittings resist acids, alkalis, salt solutions and most other chemicals. (Refer to the Royal Chemical Resistance Guide for detailed information.) There is no risk of corrosion when exposed to naturally corrosive soil conditions, electrochemical or galvanic environments. Royal's Rigid PVC Conduit has achieved sunlight resistance as per the requirements of the Electrical Code.

FT-4 Rating

Rigid PVC Conduit pipe has an FT-4 Rating and can be used in non-combustible construction as per Part 3 of the National Building Code of Canada (NBC).

Installation Guidelines

Cutting

Royal Rigid PVC Conduit can easily be cut with a hacksaw, a fine-toothed handsaw or PVC conduit cutters. For conduit with more than a 50mm (2-inch) diameter, use a mitre box or saw guide to ensure a square cut. Deburr the end using a knife or file.

Bending

It may be necessary to create bends in the field by heating and deforming Rigid PVC Conduit. To accomplish this, the following guidelines should be followed:

• For heating the Rigid PVC Conduit, use a heat gun or some other flameless heat source. Do not use an open flame to heat the conduit. Rigid PVC Conduit must be heated to approximately 127°C (260°F) in order to bend without kinking.

• Heat a length of conduit equal to approximately 10 times the nominal diameter.

• Once the Rigid PVC Conduit has been adequately heated, bend it to the required angle plus 3 extra degrees. The additional angle will accommodate the "spring back" which will occur during cooling.

• After bending of the conduit is completed, immediately cool the bend using water or cold air.

• According to the Canadian Electrical Code (CEC) and the National Electrical Code (NEC), the minimum bending radius for rigid conduit is as shown in the table below.

Nominal Size mm (in)	Min. Radius to Centre of Conduit or Tubing mm (in)
16 (½)	102 (4.016)
21 (¾)	114 (4.489)
27 (1)	146 (5.748)
35 (1¼)	184 (7.244)
41 (1½)	210 (8.268)
53 (2)	241 (9.488)
63 (2½)	267 (10.512)
78 (3)	330 (12.992)
91 (3½)	381 (14.606)
103 (4)	406 (15.984)
129 (5)	610 (24.016)
155 (6)	762 (30.000)





Procedure for Solvent Welding Joints

• Use solvent cement and primer prior to expiration date marked on container.
• Above 0° C ambient temperature, joints may be assembled without the use of primer, provided adequate penetration and softening of the pipe/fitting surface can be achieved with solvent cement alone.

1. Assemble materials for the job, including correct solvent cement, primer and correctly sized applicator.

2. Cut pipe as square as possible using a hand saw and miter box or mechanical saw. Do not use a diagonal cut, as it reduces the bonding area in the joint.

3. If plastic tubing cutters are used, care must be taken to remove any raised bead at the end of the pipe, caused by cutting. A file or reamer may be used to remove the bead.

4. Use a knife, file or reamer to remove burrs from the inside and outside of the pipe end, as these will hinder the integrity of the joint. All sharp edges should be removed from the inside and outside edges of the pipe to prevent the pipe from pushing the solvent cement into the fitting socket, thereby causing a weak spot to form. The pipe end should be chamfered, as shown below.

Chamfered Pipe

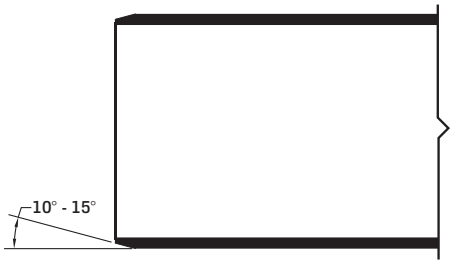

Procedure for Solvent Welding Joints Continued

5. All dirt, grease and moisture should be removed from the pipe and socket by thoroughly wiping with a clean, dry cloth.

6. Dry fit pipe and fitting joints prior to cementing. For proper interference fit, the pipe should go easily into the socket approximately ⅓ to ⅔ of the socket depth. If this is not the case, other pipe or fittings should be used.

7. The applicator should be sized according to the size of pipe and fittings being joined. The brush width of the applicator should be equal to approximately ½ of the pipe diameter.

8. Primer is used to penetrate and soften the surfaces so that they will fuse together under a wide variety of conditions. The penetration or softening can be checked by dragging the edge of a knife or sharp object over the coated surface. If a few thousandths of an inch of the primed surface can be scratched or scraped away, proper penetration has occurred. Varying weather conditions affect priming and cementing action and may require more time or repeated applications to either or both surfaces.

9. If using primer, use the correct applicator size (see #7) and aggressively work the primer into the socket, keeping the surface and applicator wet until the surface has softened, re-dipping the applicator as required. When the surface is primed, remove any puddles of primer from the socket.

10. Aggressively work the primer on to the end of the pipe, to a point ½" beyond the depth of the socket.

11. Perform a second application of primer in the socket.

12. While the surfaces are still wet, the appropriate solvent cement should be applied.

13. Using the correct applicator size, aggressively work a full, even layer of cement onto the pipe end to a point equal to the depth of the socket. Do not brush out to a thin paint type layer, as this will dry within a few seconds.

14. Aggressively work a medium layer of cement into the fitting socket; avoid puddling cement in the socket. On the pipe end, do not coat beyond the socket depth or allow cement to run down into the pipe beyond the socket.

15. Apply a second full, even layer of cement on the pipe.

16. Immediately, while the cement is still wet, assemble the joint. Use enough force to ensure that the pipe is fully inserted into the socket. Twist the pipe a ¼ turn as it is being inserted.

17. Hold the joint together for approximately 30 seconds to avoid push out.

18. After assembly, inspect the joint to ensure that there is a ring or bead of cement completely around the juncture of the pipe and socket. If there are voids in this ring, sufficient cement was not applied and the joint may be defective.

19. Remove the excess cement from the pipe and socket (including the ring or bead) using a cloth. Avoid disturbing or moving the joint.

20. Handle newly cemented joints with care until initial set has taken place. Follow set and cure times before handling or testing the system.

Pipe Dimensions

Nominal Size mm (in)	Avg. Outside Diameter mm (in)	Avg. Inside Diameter mm (in)	Avg. Wall Thickness mm (in)	Approx. Weight lb/100ft (kg/m)
12 (½)	21 (0.840)	15 (0.608)	3 (0.116)	16.1 (0.24)
19 (¾)	27 (1.050)	21 (0.810)	3 (0.120)	21.5 (0.32)
25 (1)	33 (1.315)	26 (1.033)	4 (0.141)	31.9 (0.47)
32 (1¼)	42 (1.660)	35 (1.362)	4 (0.149)	43.8 (0.65)
38 (1½)	48 (1.900)	40 (1.592)	4 (0.154)	52.3 (0.78)
50 (2)	60 (2.375)	52 (2.049)	4 (0.163)	70.3 (1.05)
63 (2½)	73 (2.875)	62 (2.445)	5 (0.215)	112.0 (1.61)
75 (3)	89 (3.500)	77 (3.042)	6 (0.229)	146.7 (2.18)
90 (3½)	102 (4.000)	89 (3.520)	6 (0.240)	176.4 (2.63)
100 (4)	114 (4.500)	102 (3.998)	6 (0.251)	208.9 (3.11)
125 (5)	141 (5.565)	127 (5.017)	7 (0.274)	283.4 (4.22)
150 (6)	168 (6.625)	153 (6.031)	8 (0.297)	368.0 (5.48)

Specification

All wiring shall be installed in Royal Electrical Solutions Rigid PVC Conduit and secured with proper fittings. All conduit and fittings shall be manufactured by Royal Building Products, Pipe & Fittings Solutions. All outlets, pull boxes and junction points shall be Royal products.

Exposed conduit shall be securely attached and supported with straps that are installed at the recommended spacing specified in CEC Section 12-1114. The straps must allow for linear expansion and contraction of the conduit due to temperature change. If the variance in temperature exceeds 14°C (25°F), expansion joints shall be installed according to the manufacturer's recommendations.

If Rigid PVC Conduit is embedded in concrete or direct buried, support straps are not required.

Solvent Cementing

All connections should be made using and applying Royal Electrical Solutions solvent cement.

Set Times

Average Initial Set Times			
Temperature Range	Pipe Sizes ½" to 1¼"	Pipe Sizes 1½" to 2"	Pipe Sizes 2½" to 6"
15°C to 40°C	2 min.	5 min.	30 min.
5°C to 15°C	5 min.	10 min.	2 hrs.
-16°C to 5°C	10 min.	15 min.	12 hrs.

Joint Cure Schedule

Average Joint Cure Times			
Temperature Range During Assembly & Cure Periods	Pipe Sizes ½" to 1¼"	Pipe Sizes 1½" to 2"	Pipe Sizes 2½" to 6"
15°C to 40°C	2 min.	5 min.	30 min.
5°C to 15°C	5 min.	10 min.	2 hrs.
-16°C to 5°C	10 min.	15 min.	12 hrs.

In damp or humid weather allow 50% more cure time.

Estimated Solvent Cement Requirements

Average Number of Joints per Litre of Solvent Cement									
Pipe/Fitting Diameter	½"	¾"	1"	1½"	2"	2½"	3"	4"	6"
Number of Joints	300	200	125	90	60	40	40	30	10

Estimated Primer Requirements

Average Number of Joints per Litre of Primer									
Pipe/Fitting Diameter	½"	¾"	1"	1½"	2"	2½"	3"	4"	6"
Number of Joints	600	400	250	180	120	80	80	60	20

Solvent Cementing in Cold Weather:

- Store pipe and fittings in a heated area. Prefabricate as much of the system as possible in a heated area.
- When not in use, store sealed solvent cement and primer between 5°C and 21°C. Do not use open flame or electric heaters to warm cements and primers.
- Take care to remove moisture, ice and snow from the mating surfaces.

Solvent Cementing in Hot Weather:

- At the time of assembly, the surface temperature of the mating surfaces should not exceed 45°C. Shade or shelter the joint surfaces from direct sunlight for at least 1 hour prior to joining and during the joining process. If necessary, swab the mating surfaces with clean, wet rags to reduce the surface temperature (thoroughly dry surfaces before applying primer or cement).
- Make joints during the cooler early morning hours.
- Apply cement quickly and join pipe to fitting as quickly as possible after applying the cement.
- Keep solvent cement container closed or covered when not in use, to minimize solvent loss.

Solvent Cementing in Wet Conditions:

- Mating surfaces must be dry when the joint is made.
- Work under a cover or canopy to keep rain off pipe and fittings.
- Work quickly after drying the pipe and fitting to avoid condensation.
- Allow a longer cure time before the system is tested or used.

Storage and Handling of Solvent Cement and Primer:

- Solvent cement and primer contain highly flammable solvents. Follow all specific safety precautions provided on container label and Material Safety Data Sheet.
- Keep primer and solvent cement away from heat, sparks and open flame.
- Keep containers tightly closed except when in use.
- Ensure proper ventilation of work area and avoid inhaling solvent vapours.
- Where the possibility of splashing exists, wear proper eye protection or a face shield.
- Avoid contact with skin.

Support Straps

Rigid PVC conduit must be supported with straps when installed in above ground applications. These straps should be installed snugly, while allowing linear movement of the conduit. See the table below for recommended maximum spacing of support straps.

Maximum Recommended Spacing of Support Straps		
Nominal Size mm (in)	CEC Recommended Spacing ft (m)	NEC Recommended Spacing ft (m)
16 (½)	2½ (0.75)	3 (0.91)
21 (¾)	2½ (0.75)	3 (0.91)
27 (1)	2½ (0.75)	3 (0.91)
35 (1¼)	4 (1.20)	5 (1.50)
41 (1½)	4 (1.20)	5 (1.50)
53 (2)	6 (1.80)	5 (1.50)
63 (2½)	6 (1.80)	3 - 6 (1.80)
78 (3)-129 (5)	7 (2.10)	3½ - 5 (2.10)
155 (6)	8 (2.50)	8 (2.50)

Storing Conduit Pipe and Fittings

Store Rigid PVC conduit pipe and fittings at the same temperature. Otherwise they may expand and contract at different rates and become incompatible.

Maximum Operating Temperatures

According to the Canadian Electrical Code (CEC), Rigid PVC conduit is intended for use at a continuous operating temperature of 75°C (167°F). For US applications, our Rigid PVC conduit is rated for use with 90°C wiring, according to the requirements of the NEC.

Ambient Temperatures

Royal Electrical Solutions Rigid PVC Conduit and fittings can be installed in locations with an ambient temperature not exceeding 50°C (122°F).

Expansion Joints

According to the CEC, if the amount of expansion expected due to temperature variance during and after construction is more than 45mm, expansion joints must be used.

Expected Expansion

The coefficient of linear expansion for Rigid PVC conduit is as follows:

3×10^{-5} in (expansion/contraction) / in (pipe length) /°F (change in temperature),

5.4×10^{-5} mm (expansion/contraction)/mm (pipe length)/°C (change in temperature)





Note:

The following chart shows the amount of expansion expected with various pipe lengths/temperature changes. If the Rigid PVC Conduit is installed in an exposed location, 17°C (30°F) should be added to the amount of temperature change (ΔT) due to the effects of radiant heat.

Expansion/Contraction of PVC (mm)

Length of Pipe Run (m)

ΔT (°C)	2	4	6	8	10	12	14	16	18	20
5	0.54	1.08	1.62	2.16	2.70	3.24	3.78	4.32	4.86	5.40
10	1.08	2.16	3.24	4.32	5.40	6.48	7.56	8.64	9.72	10.80
15	1.62	3.24	4.86	6.48	8.10	9.72	11.34	12.96	14.58	16.20
20	2.16	4.32	6.48	8.64	10.80	12.96	15.12	17.28	19.44	21.60
25	2.70	5.40	8.10	10.80	13.50	16.20	18.90	21.60	24.30	27.00
30	3.24	6.48	9.72	12.96	16.20	19.44	22.68	25.92	29.16	32.40
35	3.78	7.56	11.34	15.12	18.90	22.68	26.46	30.24	34.02	37.80
40	4.32	8.64	12.96	17.28	21.60	25.92	30.24	34.56	38.88	43.20
45	4.86	9.72	14.58	19.44	24.30	29.16	34.02	38.88	43.74	48.60
50	5.40	10.80	16.20	21.60	27.00	32.40	37.80	43.20	48.60	54.00

Expansion/Contraction of PVC (in)

Length of Pipe Run (ft)

ΔT (°F)	5	10	15	20	25	30	35	40	45	50
5	0.01	0.02	0.03	0.04	0.05	0.05	0.06	0.07	0.08	0.09
10	0.02	0.04	0.05	0.07	0.09	0.11	0.13	0.14	0.16	0.18
15	0.03	0.05	0.08	0.11	0.14	0.16	0.19	0.22	0.24	0.27
20	0.04	0.07	0.11	0.14	0.18	0.22	0.25	0.29	0.32	0.36
25	0.05	0.09	0.14	0.18	0.23	0.27	0.32	0.36	0.41	0.45
30	0.05	0.11	0.16	0.22	0.27	0.32	0.38	0.43	0.49	0.54
35	0.06	0.13	0.19	0.25	0.32	0.38	0.44	0.50	0.57	0.63
40	0.07	0.14	0.22	0.29	0.36	0.43	0.50	0.58	0.65	0.72
45	0.08	0.16	0.24	0.32	0.41	0.49	0.57	0.65	0.73	0.81
50	0.09	0.18	0.27	0.36	0.45	0.54	0.63	0.72	0.81	0.90

Required Number of Expansion Joints

The following table shows the amount of travel that is available with each trade size of Royal Electrical Solutions Rigid PVC conduit expansion joints:

Part Number	Description in	Travel Allowance mm (in)
REJ10	½" Expansion Joint	102 (4)
REJ15	¾" Expansion Joint	102 (4)
REJ20	1" Expansion Joint	102 (4)
REJ25	1¼" Expansion Joint	102 (4)
REJ30	1½" Expansion Joint	102 (4)
REJ35	2" Expansion Joint	102 (4)
REJ40	2½" Expansion Joint	102 (4)
REJ45	3" Expansion Joint	204 (8)
REJ50	3½" Expansion Joint	204 (8)
REJ55	4" Expansion Joint	204 (8)
REJ60	5" Expansion Joint	204 (8)
REJ65	6" Expansion Joint	204 (8)

The required number of expansion joints can be calculated using the following formula:

$$\#\ \text{Expansion Joints Required} = \frac{\text{Total Expected Amount of Expansion (in)}}{\text{Expansion Joint Travel Allowance (in)}}$$

$$\#\ \text{Expansion Joints Required} = \frac{\text{Total Expected Amount of Expansion (mm)}}{\text{Expansion Joint Travel Allowance (mm)}}$$

The number of expansion joints calculated above should be rounded up to the nearest whole number.

Setting the Piston Opening

Expansion joints must be installed such that they allow for both expansion and contraction of the conduit. The piston of the expansion joint must be set at the correct position to allow for this linear movement. To determine the correct position for the piston at the time and temperature of installation, the following formula should be used:

$$\text{Piston Setting (in)} = \frac{\text{(Max. Temp. (°F) – Install. Temp. (°F))}}{\text{Total Expected Temperature Change (°F)}} \times \left[\text{Expansion Joint Expansion Allow. (in)}\right]$$

$$\text{Piston Setting (mm)} = \frac{\text{(Max. Temp. (°C) – Install. Temp. (°C))}}{\text{Total Expected Temperature Change (°C)}} \times \left[\text{Expansion Joint Expansion Allow. (mm)}\right]$$

Installation Guidelines

• Securely fasten the expansion joint barrel so that it does not shift. Loosely connect the conduit so that it is free to move.

• To function properly, expansion joints should be installed near a fixed point.

• It is better to use more expansion joints than not enough, since problems are difficult to correct after conductors and wires have been pulled through the conduit.

• Ensure that the barrel and piston are aligned and level.

• For vertical installations of expansion joints, install with the piston at the bottom to prevent dirt and water from getting inside the joint and causing it to malfunction.

Installation Example

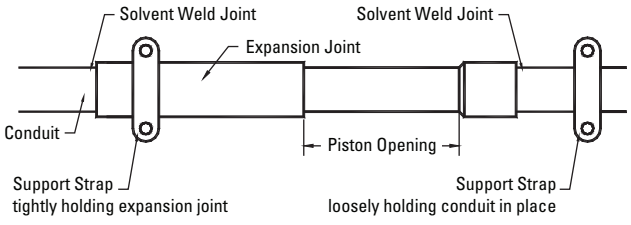

If one expansion joint is required:
Securely fasten the barrel of the expansion joint close to one of the boxes. Support the conduit with straps, but allow free movement of the conduit for expansion and contraction. (See Drawing 1)

If two expansion joints are required:
There are two options available:

1. Firmly fasten one expansion joint near each end of the run and firmly fasten the conduit at the centre. Support the rest of the conduit with straps allowing for movement of the conduit. (See Drawing 2)

2. Firmly fasten the expansion joints back-to-back at the centre of the run. The conduit should be supported with straps to allow free movements as it expands and contracts. (See Drawing 3)

If three or more expansion joints are required:
Evenly space the expansion joints along the run of Rigid PVC conduit. Tightly fasten each expansion joint and support the conduit with straps. Do not restrict the movement of the conduit.

*For information on Maximum Recommended Spacing of Support Straps, see page 4.

Drawings 1 - 4

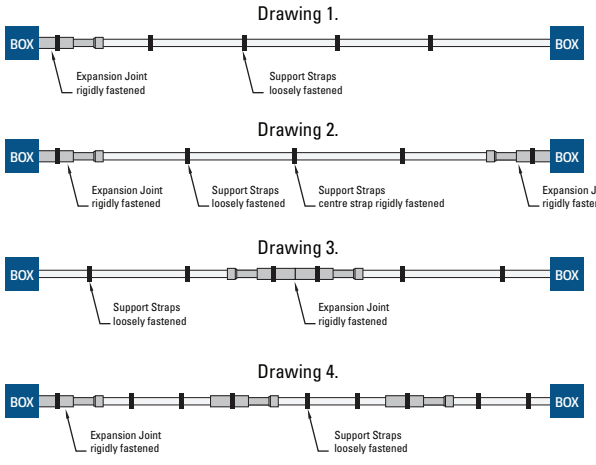

FITTINGS - Bends (Bell Ends)

90° Elbows - Bell End	Sizes (in)	Product Code	UPC Number	Diameter (D) (in)	Length (L) (in)	Radius (R) (in)
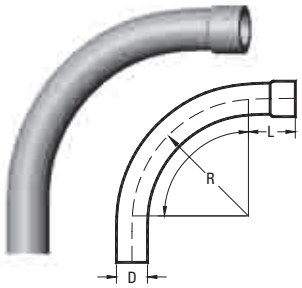	½	REE1090	46120	0.840	1.500	4.00
	¾	REE1590	46150	1.050	1.500	4.50
	1	REE2090	46180	1.315	1.875	5.75
	1¼	REE2590	46210	1.660	2.000	7.25
	1½	REE3090	46240	1.900	2.000	8.25
	2	REE3590	46270	2.375	2.000	9.50
	2½	REE4090	46330	2.875	3.000	10.50
	3	REE4590	46360	3.500	3.125	13.00
	3½	REE5090	46390	4.000	3.250	15.00
	4	REE5590	46420	4.500	3.375	16.00
	5	REE6090	46440	5.565	3.622	24.00
	6	REE6590	46460	6.625	3.740	30.00

45° Elbows - Bell End	Sizes (in)	Product Code	UPC Number	Diameter (D) (in)	Length (L) (in)	Radius (R) (in)
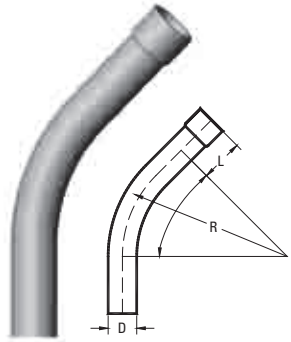	½	REE1045	46120	0.840	1.500	4.00
	¾	REE1545	46150	1.050	1.500	4.50
	1	REE2045	46180	1.315	1.875	5.75
	1¼	REE2545	46210	1.660	2.000	7.25
	1½	REE3045	46240	1.900	2.000	8.25
	2	REE3545	46270	2.375	2.000	9.50
	2½	REE4045	46330	2.875	3.000	10.50
	3	REE4545	46360	3.500	3.125	13.00
	3½	REE5045	46390	4.000	3.250	15.00
	4	REE5545	46420	4.500	3.375	16.00
	5	REE6045	46440	5.565	3.625	24.00
	6	REE6545	46460	6.625	3.750	30.00

30° Elbows - Bell End	Sizes (in)	Product Code	UPC Number	Diameter (D) (in)	Length (L) (in)	Radius (R) (in)
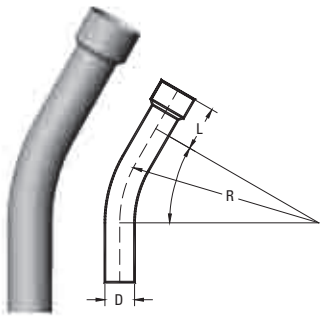	½	REE1030	46100	0.840	1.500	4.00
	¾	REE1530	46130	1.050	1.500	4.50
	1	REE2030	46160	1.315	1.875	5.75
	1¼	REE2530	46190	1.660	2.000	7.25
	1½	REE3030	46220	1.900	2.000	8.25
	2	REE3530	46274	2.375	2.000	9.50
	2½	REE4030	46310	2.875	3.000	10.50
	3	REE4530	46340	3.500	3.125	13.00
	3½	REE5030	46375	4.000	3.250	15.00
	4	REE5530	46400	4.500	3.375	16.00
	5	REE6030	46425	5.565	3.625	24.00
	6	REE6530	46442	6.625	3.750	30.00

Utilities 90° Elbows - Bell End	Sizes (in)	Product Code	UPC Number	Diameter (D) (in)	Length (L) (in)	Radius (R) (in)
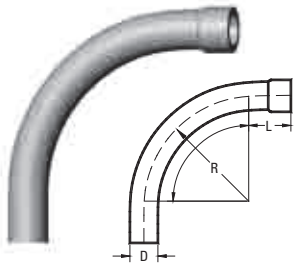	2	REE2-24	46501	2.375	41.20	24.00
	2	REE2-36	46502	2.375	31.70	36.00
	3	REE3-24	46503	3.500	41.20	24.00
	3	REE3-36	46504	3.500	31.70	36.00
	4	REE4-36	46465	4.500	31.70	36.00
	4	REE4-48	46505	4.500	31.70	48.00
	5	REE5-36	46506	5.565	31.70	36.00
	6	REE6-36	46507	6.625	31.70	36.00

Fittings - Bends (Plain Ends)

90° Elbows - Plain End	Sizes (in)	Product Code	UPC Number	Diameter (D) (in)	Length (L) (in)	Radius (R) (in)
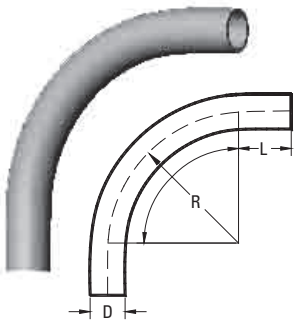	½	REE1090PE	46120	0.840	1.500	4.00
	¾	REE1590PE	46150	1.050	1.500	4.50
	1	REE2090PE	46180	1.315	1.875	5.75
	1¼	REE2590PE	46210	1.660	2.000	7.25
	1½	REE3090PE	46240	1.900	2.000	8.25
	2	REE3590PE	46270	2.375	2.000	9.50
	2½	REE4090PE	46330	2.875	3.000	10.50
	3	REE4590PE	46360	3.500	3.125	13.00
	3½	REE5090PE	46390	4.000	3.250	15.00
	4	REE5590PE	46420	4.500	3.375	16.00
	5	REE6090PE	46440	5.565	3.622	24.00
	6	REE6590PE	46460	6.625	3.740	30.00

45° Elbows - Plain End	Sizes (in)	Product Code	UPC Number	Diameter (D) (in)	Length (L) (in)	Radius (R) (in)
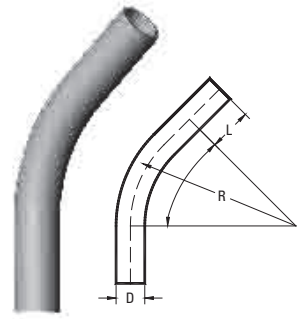	½	REE1045PE	46110	0.840	1.500	4.00
	¾	REE1545PE	46140	1.050	1.500	4.50
	1	REE2045PE	46170	1.315	1.875	5.75
	1¼	REE2545PE	46200	1.660	2.000	7.25
	1½	REE3045PE	46230	1.900	2.000	8.25
	2	REE3545PE	46280	2.375	2.000	9.50
	2½	REE4045PE	46320	2.875	3.000	10.50
	3	REE4545PE	46350	3.500	3.125	13.00
	3½	REE5045PE	46380	4.000	3.250	15.00
	4	REE5545PE	46415	4.500	3.375	16.00
	5	REE6045PE	46430	5.565	3.622	24.00
	6	REE6545PE	46450	6.625	3.740	30.00

30° Elbows - Plain End	Sizes (in)	Product Code	UPC Number	Diameter (D) (in)	Length (L) (in)	Radius (R) (in)
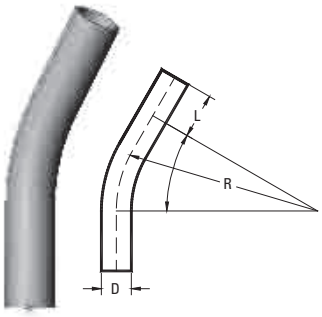	½	REE1030PE	46100	0.840	1.500	4.00
	¾	REE1530PE	46130	1.050	1.500	4.50
	1	REE2030PE	46160	1.315	1.875	5.75
	1¼	REE2530PE	46190	1.660	2.000	7.25
	1½	REE3030PE	46220	1.900	2.000	8.25
	2	REE3530PE	46274	2.375	2.000	9.50
	2½	REE4030PE	46310	2.875	3.000	10.50
	3	REE4530PE	46340	3.500	3.125	13.00
	3½	REE5030PE	46375	4.000	3.250	15.00
	4	REE5530PE	46400	4.500	3.375	16.00
	5	REE6030PE	46425	5.565	3.622	24.00
	6	REE6530PE	46442	6.625	3.740	30.00

45° Elbows - Extended Plain End	Sizes (in)	Product Code	UPC Number	Diameter (D) (in)	Length (L) (in)	Radius (R) (in)
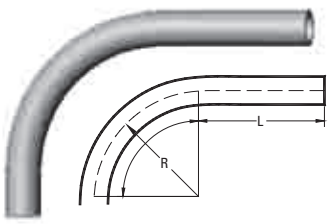	1¼	REE2590E	46125	1.660	14.750	7.25
	1½	REE3090E	46260	1.900	14.750	8.25
	2	REE3590E	43290	2.375	14.750	9.50

Fittings - Couplings and Adapters

Couplings	Sizes (in)	Product Code	UPC Number	Outside Diameter (OD) (in)	Inside Diameter (ID) (in)	Length (L) (in)
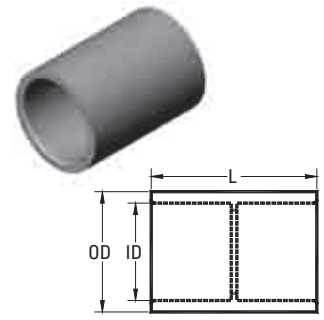	½	REC10	45950	1.080	0.840	1.437
	¾	REC15	45960	1.300	1.050	1.703
	1	REC20	45970	1.590	1.315	2.031
	1¼	REC25	45980	2.000	1.660	2.156
	1½	REC30	45990	2.230	1.900	2.281
	2	REC35	46000	2.720	2.375	2.406
	2½	REC40	46010	3.320	2.875	3.187
	3	REC45	46020	4.000	3.500	3.437
	3½	REC50	46030	4.500	4.000	3.625
	4	REC55	46060	5.000	4.500	3.750
	5	REC60	46080	6.120	5.565	4.187
	6	REC65	46090	7.370	6.625	4.562

5° Couplings *(*Fabricated)*	Sizes (in)	Product Code	UPC Number	Outside Diameter (OD) (in)	Inside Diameter (ID) (in)	Length (L) (in)
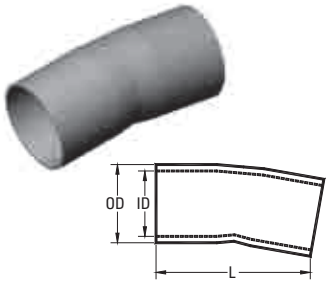	2	R5EC35	46800	2.375	2.049	4.0
	2½	R5EC40	46805	3.500	2.445	5.5
	3	R5EC45	46810	3.500	3.042	6.0
	3½	R5EC50	46815	4.500	3.521	7.0
	4	R5EC55	46820	4.500	3.998	7.0
	5	R5EC60	46825	5.565	5.018	7.5
	6	R5EC65	46830	6.625	6.031	11.0

Terminal Adapters (½" - 1¼" Tapered Thread, 6" NPT)	Sizes (in)	Product Code	UPC Number	A (in)	B (in)	Inside Diameter (ID) (in)	Thread (in)
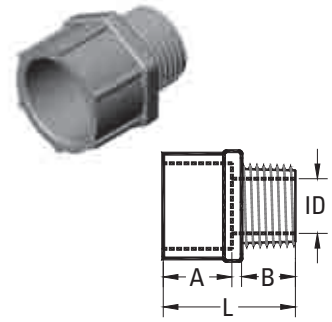	½	RTA10	45730	0.750	0.700	0.591	1.550
	¾	RTA15	45740	1.000	0.675	0.790	1.750
	1	RTA20	45750	1.115	0.625	1.000	1.860
	1¼	RTA25	45760	1.300	0.640	1.311	2.125
	1½	RTA30	45770	1.425	0.725	1.530	2.250
	2	RTA35	45780	1.150	0.800	1.970	2.100
	2½	RTA40	45790	1.900	0.800	2.346	2.930
	3	RTA45	45800	2.000	0.815	2.915	3.055
	3½	RTA50	45810	1.715	1.000	3.385	3.055
	4	RTA55	45820	1.990	0.815	3.850	3.215
	5	RTA60	45830	2.000	1.725	5.015	5.985
	6	RTA65	45840	2.130	1.875	6.025	6.500

Female Adapters (Npt Tapered Thread)	Sizes (in)	Product Code	UPC Number	A (in)	B (in)	Inside Diameter (ID) (in)	Thread (in)
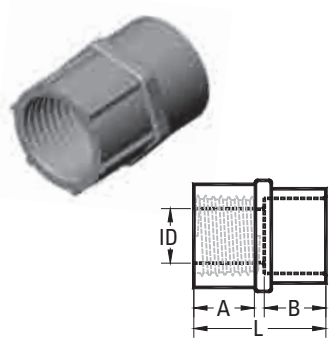	½	RFA10	44990	0.800	0.825	0.620	1.725
	¾	RFA15	45000	0.800	1.000	0.820	1.900
	1	RFA20	45010	1.000	1.200	1.065	2.300
	1¼	RFA25	45020	1.015	1.300	1.395	2.425
	1½	RFA30	45030	1.050	1.290	1.575	2.440
	2	RFA35	45040	1.075	1.375	2.050	2.550
	2½	RFA40	45050	1.675	1.985	2.470	3.760
	3	RFA45	45060	1.630	2.150	3.090	4.100
	3½	RFA50	45070	1.800	2.000	3.540	3.985
	4	RFA55	45080	1.755	2.185	4.025	4.210
	5	RFA60	45090	2.065	3.000	5.035	5.240
	6	RFA65	45100	2.065	3.000	6.045	5.235

Fittings - Expansions Joints, Straps and Meter Accessories

Expansion Joints

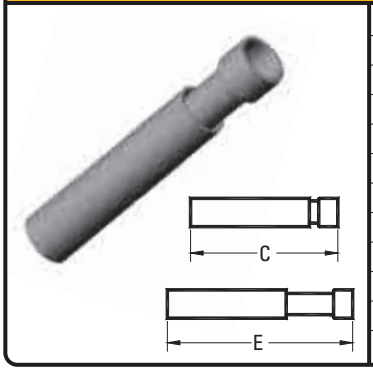

Sizes (in)	Product Code	UPC Number	Expanded Length (E) (in)	Contracted Length (C) (in)	Travel (in)
½	REJ10	44870	12.00	8.00	4.00
¾	REJ15	44880	12.00	8.00	4.00
1	REJ20	44890	12.50	8.50	4.00
1¼	REJ25	44900	13.00	9.00	4.00
1½	REJ30	44910	13.00	9.00	4.00
2	REJ35	44920	13.25	9.25	4.00
2½	REJ40	44930	13.25	9.25	4.00
3	REJ45	44940	22.25	14.25	8.00
3½	REJ50	44950	22.25	14.25	8.00
4	REJ55	44960	22.25	14.25	8.00
5	REJ60	44963	22.25	14.25	8.00
6	REJ65	44966	22.25	14.25	8.00

Expansion Joints

PVC — 2 Hole



Sizes (in)	Product No.	UPC No.
½	RPS10	45540
¾	RPS15	45550
1	RPS20	45560
1¼	RPS25	45570
1½	RPS30	45580
2	RPS35	45590

PVC Coated Steel — 2 Hole



Sizes (in)	Product No.	UPC No.
2	RCS35	44783
2½	RCS40	44784
3	RCS45	44785
3½	RCS50	44786
4	RCS55	44787
5	RCS60	44788
6	RCS65	44789

PVC Coated Steel — 1 Hole



Sizes (in)	Product No.	UPC No.
½	RCS10-1	46850
¾	RCS15-1	46852
1	RCS20-1	46854
1¼	RCS25-1	46856
1½	RCS30-1	46858
2	RCS35-1	46860
2½	RCS40-1	46862
3	RCS10-1	46864
4	RCS10-1	46866

Meter Offsets



Sizes (in)	Product No.	UPC No.
1¼	RM025	45500
2	RM035	45510

Meter Hubs



Sizes (in)	Product No.	UPC No.
1¼	RMHU25	45480
1½	RMHU30	45485
2	RMHU35	45490

Long Meter Offsets *(Fabricated)*



Sizes (in)	Product No.	UPC No.
1¼	RLM025	45472
1½	RML030	45474
2	RML035	45476

Expansion & Deflection Fittings Assembly



Sizes (in)	Product No.	UPC No.
2	RSEJ35	46990
3	RSEJ45	46992
4	RSEJ55	46994

Service Entrance Fittings



Sizes (in)	Product No.	UPC No.
½	REF10	44795
¾	REF15	44800
1	REF20	44810
1¼	REF25	44820
1½	REF30	44830
2	REF35	44840
2½	REF40	44842
3	REF45	44844
3½	REF50	44852
4	REF55	44860

Ecovoc Solvent Cement *(*c/w Screw Cap & Dauber)*



Sizes (in)	Product No.	UPC No.	Carton Qty.
250ml	RVOC250*	54790	24
475ml	RVOC475*	54795	12
950ml	RVOC950*	54797	12
4L	RVOC4L	54799	4

Privoc Solvent Cement *(*c/w Screw Cap & Dauber)*

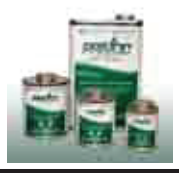

Sizes (in)	Product No.	UPC No.	Carton Qty.
250ml	RVOCPR250*	54800	24
475ml	RVOCPR475*	54802	12
950ml	RVOCPR950*	54804	12
4L	RVOCPR4L	54806	4

Fittings - Access Fittings

Type C	Sizes (in)	Product Code	UPC Number	A (in)	B (in)	C (in)	D (in)	E (in)
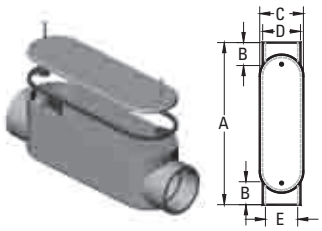	½	RSC10S	46600	5.606	0.639	1.268	1.100	0.840
	¾	RSC20S	46605	5.606	0.810	1.536	1.325	1.050
	1	RSC30S	46610	6.500	0.910	1.700	1.600	1.335
	1¼	RSC40S	46615	7.900	1.050	2.300	2.250	1.100
	1½	RSC50S	46620	8.500	1.125	2.675	2.250	1.900
	2	RSC60S	45605	10.875	1.160	3.188	2.820	2.375
	2½	RSC70S	45606	14.600	1.750	4.500	3.950	2.870
	3	RSC80S	45607	14.600	1.900	4.500	3.950	3.510
	3½	RSC90S	45609	17.040	2.125	5.536	5.000	4.000
	4	RSC100S	45608	17.040	2.125	5.536	5.000	4.530

Type LB	Sizes (in)	Product Code	UPC Number	A (in)	B (in)	C (in)	D (in)	E (in)	F (in)	G (in)	H (in)
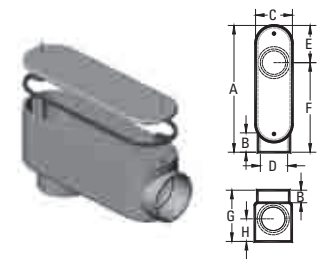	½	RSLB10S	45620	4.337	0.639	1.268	0.840	1.297	4.095	2.487	1.005
	¾	RSLB20S	45630	5.395	0.810	1.536	1.050	1.297	4.095	2.487	1.005
	1	RSLB30S	45640	6.250	0.910	1.700	1.335	1.500	4.750	2.075	1.125
	1¼	RSLB40S	45650	7.625	1.050	2.300	1.100	1.750	5.750	3.575	1.562
	1½	RSLB50S	45660	8.250	1.125	2.675	1.900	1.750	6.500	3.938	1.656
	2	RSLB60S	45670	10.531	1.160	3.188	2.375	2.344	8.156	4.535	1.968
	2½	RSLB70S	45675	13.630	1.750	4.500	2.870	2.733	9.825	6.240	2.610
	3	RSLB80S	45680	13.630	1.900	4.500	3.510	3.805	10.897	6.240	2.610
	3½	RSLB90S	45610	16.000	2.125	5.536	4.000	4.535	11.465	7.500	2.975
	4	RSLB100S	45681	16.000	2.125	5.536	4.530	4.535	11.465	7.500	2.975

Type LL	Sizes (in)	Product Code	UPC Number	A (in)	B (in)	C (in)	D (in)	E (in)	F (in)	G (in)
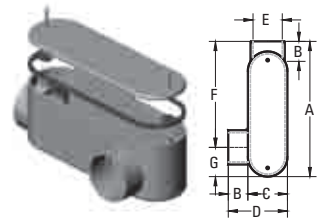	½	RSLL10S	46650	4.337	0.639	1.268	2.487	0.840	4.095	1.297
	¾	RSLL20S	46655	5.395	0.810	1.536	2.487	1.050	4.095	1.297
	1	RSLL30S	46660	6.250	0.910	1.700	2.075	1.335	4.750	1.500
	1¼	RSLL40S	46665	7.625	1.050	2.300	3.575	1.100	5.750	1.750
	1½	RSLL50S	46670	8.250	1.125	2.675	3.938	1.900	6.500	1.750
	2	RSLL60S	45682	10.531	1.160	3.188	4.535	2.375	8.156	2.344
	2½	RSLL70S	45672	13.630	1.750	4.500	6.240	2.870	9.825	3.805
	3	RSLL80S	46674	13.630	1.900	4.500	6.240	3.510	10.897	2.733
	3½	RSLL90S	46678	16.000	2.125	5.536	7.500	4.000	11.465	4.535
	4	RSLL100S	46676	16.000	2.125	5.536	7.500	4.530	11.465	4.535

Type LR	Sizes (in)	Product Code	UPC Number	A (in)	B (in)	C (in)	D (in)	E (in)	F (in)	G (in)
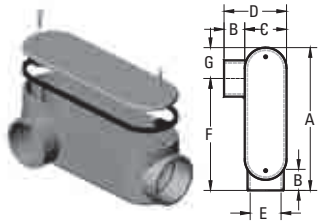	½	RSLR10S	46700	4.337	0.639	1.268	2.487	0.840	4.095	1.297
	¾	RSLR20S	46705	5.395	0.810	1.536	2.487	1.050	4.095	1.297
	1	RSLR30S	46710	6.250	0.910	1.700	2.075	1.335	4.750	1.500
	1¼	RSLR40S	46715	7.625	1.050	2.300	3.575	1.100	5.750	1.750
	1½	RSLR50S	46720	8.250	1.125	2.675	3.938	1.900	6.500	1.750
	2	RSLR60S	45683	10.531	1.160	3.188	4.535	2.375	8.156	2.344
	2½	RSLR70S	46725	13.630	1.750	4.500	6.240	2.870	9.825	3.805
	3	RSLR80S	46728	13.630	1.900	4.500	6.240	3.510	10.897	2.733
	3½	RSLR90S	46738	16.000	2.125	5.536	7.500	4.000	11.465	4.535
	4	RSLR100S	46735	16.000	2.125	5.536	7.500	4.530	11.465	4.535

Fittings - Access Fittings

Type E	Sizes (in)	Product Code	UPC Number	A (in)	B (in)	C (in)	D (in)
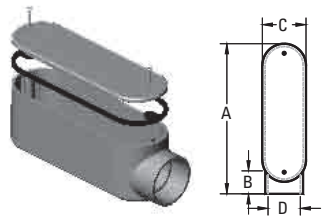	½	RSE10S	46630	4.337	0.639	1.268	0.840
	¾	RSE20S	46632	5.395	0.810	1.536	1.050
	1	RSE30S	46634	6.250	0.910	1.700	1.335
	1¼	RSE40S	46636	7.625	1.050	2.300	1.100
	1½	RSE50S	46638	8.250	1.125	2.675	1.900
	2	RSE60S	46640	10.351	1.160	3.188	2.375
	2½	RSE70S	46642	13.630	1.750	4.500	2.870
	3	RSE80S	46644	13.630	1.900	4.500	3.510
	3½	RSE90S	46648	16.000	2.125	5.536	4.000
	4	RSE100S	46646	16.000	2.125	5.536	4.530

Type T	Sizes (in)	Product Code	UPC Number	A (in)	B (in)	C (in)	D (in)
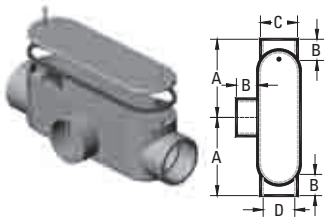	½	RST10S	45690	2.280	0.639	1.100	0.840
	¾	RST20S	45700	2.803	0.810	1.325	1.050
	1	RST30S	45710	3.250	0.910	1.600	1.335
	1¼	RST40S	45720	3.950	1.050	2.250	1.100
	1½	RST50S	45723	4.250	1.125	2.250	1.900
	2	RST60S	45725	5.438	1.160	2.820	2.375
	2½	RST70S	46745	7.300	1.750	3.950	2.870
	3	RST80S	46748	7.300	1.900	3.950	3.510
	3½	RST90S	46752	8.535	2.125	5.000	4.000
	4	RST100S	46750	8.535	2.125	5.000	4.530

Type TB	Sizes (in)	Product Code	UPC Number	A (in)	B (in)	C (in)	D (in)	E (in)	F (in)	G (in)	H (in)
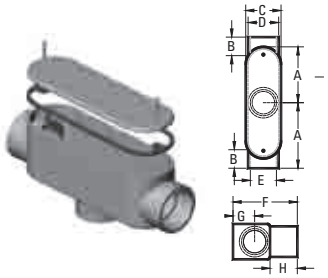	½	RSTB10S	45692	2.280	0.639	1.268	1.100	0.840	2.487	1.005	0.750
	¾	RSTB20S	45702	2.803	0.810	1.536	1.325	1.050	2.487	1.005	0.810
	1	RSTB30S	45712	3.250	0.910	1.700	1.600	1.335	2.075	1.125	1.115
	1¼	RSTB40S	45721	3.950	1.050	2.300	2.250	1.100	3.575	1.562	1.300
	1½	RSTB50S	45724	4.250	1.125	2.675	2.250	1.900	3.938	1.656	1.425
	2	RSTB60S	45727	5.438	1.160	3.188	2.820	2.375	4.535	1.968	1.160
	2½	RSTB70S	46760	7.300	1.750	4.500	3.950	2.870	6.240	2.610	-
	3	RSTB80S	46762	7.300	1.900	4.500	3.950	3.510	6.240	2.610	-
	3½	RSTB90S	46766	8.535	2.125	5.536	5.000	4.000	7.500	2.975	-
	4	RSTB100S	46764	8.535	2.125	5.536	5.000	4.530	7.500	2.975	-

Fittings - Cover Plates

Single Gang Cover Plates - F Series



Description	Product Code	UPC Number
Toggle Switch	RTSC15-10	45845
Duplex Receptacle	RDRC15-10R20	44685
Single Receptacle - 15 Amp	RC15-10R20-3	47035
Single Receptacle - 20 Amp	RC15-10R30-3	47036
Single Receptacle - 30 Amp	RC15-10	47037
Single Blank with Gasket	RBRC15-10	44680
Gasket	GASK15-10	44682

Double Gang Cover Plates - F Series



Description	Product Code	UPC Number
Double Switch	RTSC20-2	45846
Combo Switch/Receptacle	RTSDC20-2	45847
Double Duplex	RDRC20-2	44686
Double Blank with Gasket	RBRC20-2	44681
Gasket	GASK20-2	45949

Triple Gang Cover Plates - F Series



Description	Product Code	UPC Number
Triple Switch	RTSC20-3	45857
Double Switch Receptacle	RDSDR20-3	44689
Double Receptacle/Switch	RTSDC20-3	45858
Triple Receptacle	RDRC20-3	44688
Triple Blank with Gasket	RBRC20-3	44683
Gasket	GASK20-3	45859

Fittings - Weatherproof Cover Plates

Single Gang Weatherproof Cover Plates



RVSC15-10 RVSC15-10 RWTG15-10 RWGF15-10 RWTL RVSC15-10 GASK W

Description	Product Code	UPC Number
Toggle Switch Cover	RVSC15-10	45940
Plunger Switch Cover	RVPT15-10	45930
Toggle	RWTG15-10	45339
Duplex Receptacle	RWDR15-10	45093
Duplex Receptacle - White	RWDR15-10W	45094
Ground Fault Receptacle	RWGF15-10	45095
Ground Fault Receptacle - White	RWGF15-10W	45098
Single Receptacle - 15 Amp	RWTL15	45470
Single Receptacle - 20 Amp	RWTL20	45472
Single Receptacle - 30 Amp	RWTL30	45480
Single Receptacle - 50 Amp	RWTL50	45482
Gasket	GASK W	45484

Double Gang Weatherproof Cover Plates



RVSC20-2 RVSRC20-2 RVSDR20-2 RVSRR20-2 GASK20-2

Description	Product Code	UPC Number
Double Toggle	RVSC20-2	45941
Plunger/GFI	RVSRC20-2	45947
Plunger/Duplex Receptacle	RVSDR20-2	45945
Plunger/Single Receptacle	RVSRR20-2	45948
Gasket	GASK20-2	45949

Fittings - Slab Boxes

Single Gang Boxes - F Series



RFS



RFSS



RFSC



RFSCC

Description	Product Code	UPC Number	Volume (in3)
½" FS	RFS10	45200	17.0
¾" FS	RFS15	45210	17.0
½" FSS	RFSS10	45240	17.5
¾" FSS	RFSS15	45250	17.5
½" FSC	RFSC10	45220	16.3
¾" FSC	RFSC15	45230	16.3
½" FSCC	RFSCC10	45233	17.0
¾" FSCC	RFSCC15	45235	17.0

Single Gang Deep Boxes - FD Series



RFDS



RFDC



BLANK



347 VOLT

Outside Dimensions: Length = 4.5", Width = 6.6", Height = 2.5", except BLANK, L = 4.5", W = 6.6", H = 3.0"

Description	Product Code	UPC Number	Volume (in3)
½" FSC	RFSC3-10	45224	56.0
¾" FSC	RFSC3-15	45232	56.0
1" FSC	RFSC3-20	45228	56.0
½" FS	RFS3-10	45208	54.0
¾" FS	RFS3-15	45218	54.0
1" FS	RFS3-20	45219	54.0
BLANK	RFD-3	45155	73.8

Double Gang Boxes - F Series


FS


FSS


FSC


FSCC


BLANK

Outside Dimensions: Length = 4.5", Width = 4.75", Height = 2.5", except BLANK, L=4.75", W=4.75", H=3.0"

Description	Product Code	UPC Number	Volume (in3)
½" FS	RFS2-10	45205	39.5
¾" FS	RFS2-15	45215	39.5
1" FS	RFS2-20	45216	39.5
½" FSS	RFSS2-10	45242	37.0
¾" FSS	RFSS2-15	45244	37.0
1" FSS	RFSS2-20	45246	37.0
½" FSC	RFSC2-10	45222	37.0
¾" FSC	RFSC2-15	45231	37.0
1" FSC	RFSC2-20	45226	37.0
½" FSCC	RFSCC2-10	45234	36.0
¾" FSCC	RFSCC2-15	45238	36.0
1" FSCC	RFSCC2-20	45239	36.0
BLANK	RFD-D	45150	52.0

Triple Gang Boxes - F Series


FSC


FS


BLANK

Outside Dimensions: Length = 4.5", Width = 6.6", Height = 2.5", except BLANK, L = 4.5", W = 6.6", H = 3.0"

Description	Product Code	UPC Number	Volume (in3)
½" FSC	RFSC3-10	45224	56.0
¾" FSC	RFSC3-15	45232	56.0
1" FSC	RFSC3-20	45228	56.0
½" FS	RFS3-10	45208	54.0
¾" FS	RFS3-15	45218	54.0
1" FS	RFS3-20	45219	54.0
BLANK	RFD-3	45155	73.8

Octagonal Boxes



Size (in)	Product No.	UPC No.
4 x 1½	ROB15/10	45520
4 x 2	ROB20	45525
¾	RKO15	45450
1	RKO20	45455

Octagonal Box Extension Rings



Size (in)	Product No.	UPC No.
1	RXR20	46490
2	RXR35	46495

Junction Boxes With Gasket



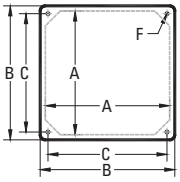



Nominal Size (in)	Product Number	UPC Number	Inside Length & Width (A) (in)	Outside Length & Width (B) (in)	Length Screw to Screw (C) (in)	Outside Height (E) (in)	Inside Height (D) (in)	Screw Size (F)	Volume (in3)
4 x 4 x 2	RJB442	45300	3.675	4.000	3.450	2.125	2.000	8-32	25.4
4 x 4 x 4	RJB444	45310	3.675	4.000	3.450	4.188	3.750	8-32	47.5
4 x 4 x 6	RJB446	45315	3.675	4.000	3.450	6.225	6.000	8-32	76.1
5 x 5 x 2	RJB552	45320	4.680	5.000	4.485	2.000	1.845	8-32	38.7
6 x 6 x 4	RJB664	45330	6.000	6.375	5.813	4.188	4.000	10-32	139.5
6 x 6 x 6	RJB666	45335	6.000	6.375	5.813	6.188	6.000	10-32	209.3
8 x 8 x 4	RJB884	45340	8.075	8.625	7.996	4.230	4.005	¼-20	258.6
8 x 8 x 7	RJB887	45350	8.100	8.625	7.996	7.250	7.035	¼-20	455.6
12 x 12 x 4	RJB12124	45280	12.085	12.580	11.874	4.256	4.030	¼-20	578.3
12 x 12 x 6	RJB12126	45290	12.085	12.580	11.874	6.240	6.025	¼-20	864.6
12 x 12 x 8	RJB12128	45295	12.085	12.580	11.874	8.250	8.025	¼-20	1151.6

Highway Boxes





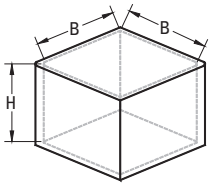

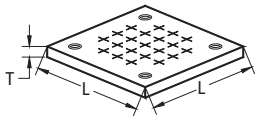

Nominal Size (in)	Product Number	UPC Number	Box Inside Length & Width (B) (in)	Box Inside Depth (H) (in)	Lid Length & Width (L) (in)	Thickness of Lid (T) (in)	Volume (in3)
6 x 6 x 4	H664	47040	6.0	4.25	9.0	0.60	139.5
6 x 6 x 6	H666	47041	6.0	6.25	9.0	0.60	209.3
8 x 8 x 4	H884	47042	8.0	4.25	11.5	0.75	258.6
8 x 8 x 6	H886	47043	8.0	6.25	11.5	0.75	400.0
8 x 8 x 7	H887	47044	8.0	7.25	11.5	0.75	455.6
8 x 8 x 7	H887-A	47045	8.0	7.25	11.5	0.75	418.4

Junction Box Adapters



Size (in)	Product No.	UPC No.
½	RJBA10	45360
¾	RJBA15	45370
1	RJBA20	45380
1¼	RJBA25	45390
1½	RJBA30	45400
2	RJBA35	45410
2½	RJBA40	45420
3	RJBA45	45430
3½	RJBA50	45435
4	RJBA55	45440

Duplex Floor Boxes & Cover (*Includes Leveling Ring)



Size (in)	Product No.	UPC No.
4 x ¾	RFDB4	46980
2 x ¾, 2 x 1	RFDB2	46982
Polycarbonate Bronze Cover	RFDBC	46984

Notes:

Our various pipe and fittings solutions have been manufactured to meet the needs of our customers and their applications. Contact one of the below Sales Centres for more information:

- Municipal Pipe & Fittings Solutions
- Plumbing Pipe & Fittings Solutions
- Electrical Pipe & Fittings Solutions
- Industrial Pipe & Fittings Solutions
- Irrigation Pipe & Fittings Solutions

Sales & Distribution Centres:

Langley, BC, Canada
T/F 1.800.663.0696
F 1.800.663.6564

Woodbridge, ON, Canada
T/F 1.866.769.7473
F 905.856.3986

Laval, QC, Canada
T/F 1.800.465.9754
F 450.688.6624

Distribution Centres:

Calgary, AB, Canada
T/F 1.800.663.0696
F 1.800.663.6564

Winnipeg, MB, Canada
T/F 1.800.663.0696
F 1.800.663.6564

royalelectricalca.com





MIX
Paper from responsible sources
FSC® C003472

E_RCPF_BRV4
Printed 02.2014

ROYAL® Building Products

Pipe & Fittings Solutions | Municipal Plumbing Electrical Industrial Irrigation

Rigid PVC Conduit Pipe & Fittings

A system for residential, industrial, commercial and institutional applications.

Product Description & Applications

Royal Building Products® Electrical Solutions manufactures a complete line of Rigid PVC Conduit pipe and fittings for electrical applications. Our products are designed to reduce labour and maintenance costs, while offering superior performance.

Products are certified by the Canadian Standards Association (CSA) and Underwriters Laboratories (UL) for use in above and below ground applications. Our Rigid PVC conduit pipe and fittings are available in 12 to 150mm (½- to 6-inch) diameters and 3- or 6-metre (10- or 20-foot) lengths.

Standards and Codes

Royal Electrical Solutions Rigid PVC Conduit pipe and fittings are certified to CSA Standards as noted below. Our Rigid PVC conduit pipe and fittings shall be installed according to the Canadian Electrical Code (CEC) Part I, Rules 12-1100 - 12-1122 and the National Electrical Code (NEC) Article 352.

Pipe	Fittings
C22.2 No. 211.2	C22.2 No. 18.2, 85 (Boxes) No. 40 (Electrical Encl.) No. 42.1 (Covers) No. 85 (Fittings)
UL 651	UL 514C (Boxes) UL 50 (Electrical Encl.) UL 514D (Covers) UL 651 (Fittings)
Conforms to NEMA TC2	





Features and Benefits

Saves Labour

Rigid PVC Conduit pipe and fittings are easy to install, cut and join.

Easy Wire Pulls

The conduit's smooth interior surface reduces friction and prevents damage to wires when pulling wire and conductors for long runs and even through 90° bends.

Lightweight Materials

Rigid PVC Conduit is easier to move and handle because it is approximately one-fifth the weight of steel and half the weight of aluminum.

Approximate Weight Comparison

Size mm (in)	PVC lb/100ft (kg/m)	Aluminum lb/100ft (kg/m)	Steel lb/100ft (kg/m)
12 (½)	16.1 (0.24)	27 (0.40)	79 (1.20)
19 (¾)	21.5 (0.32)	37 (0.55)	105 (1.55)
25 (1)	31.9 (0.47)	53 (0.80)	153 (2.30)
32 (1¼)	43.8 (0.65)	70 (1.05)	201 (3.00)
38 (1½)	52.3 (0.78)	86 (1.30)	249 (3.70)
50 (2)	70.3 (1.05)	116 (1.75)	334 (5.00)
63 (2½)	112.0 (1.61)	183 (2.75)	527 (7.85)
75 (3)	146.7 (2.18)	239 (3.55)	690 (10.25)
90 (3½)	176.4 (2.63)	288 (4.30)	831 (12.40)
100 (4)	208.9 (3.11)	340 (5.10)	982 (14.60)
125 (5)	283.4 (4.22)	465 (6.90)	1,344 (20.40)
150 (6)	368.0 (5.48)	613 (9.10)	1,771 (26.35)

Simplifies Direct Burial

Royal Electrical Solutions Rigid PVC Conduit does not require additional protection for direct burial installations according to the Canadian Electrical Code (CEC) and the National Electrical Code (NEC). Normal construction practices should be followed for trenching and backfill operations.

Non-Conductive

Rigid PVC Conduit is non-conductive.

Long Life

Royal Rigid PVC Conduit and fittings resist acids, alkalis, salt solutions and most other chemicals. (Refer to the Royal Chemical Resistance Guide for detailed information.) There is no risk of corrosion when exposed to naturally corrosive soil conditions, electrochemical or galvanic environments. Royal's Rigid PVC Conduit has achieved sunlight resistance as per the requirements of the Electrical Code.

FT-4 Rating

Rigid PVC Conduit pipe has an FT-4 Rating and can be used in non-combustible construction as per Part 3 of the National Building Code of Canada (NBC).

Installation Guidelines

Cutting

Royal Rigid PVC Conduit can easily be cut with a hacksaw, a fine-toothed handsaw or PVC conduit cutters. For conduit with more than a 50mm (2-inch) diameter, use a mitre box or saw guide to ensure a square cut. Deburr the end using a knife or file.

Bending

It may be necessary to create bends in the field by heating and deforming Rigid PVC Conduit. To accomplish this, the following guidelines should be followed:

• For heating the Rigid PVC Conduit, use a heat gun or some other flameless heat source. Do not use an open flame to heat the conduit. Rigid PVC Conduit must be heated to approximately 127°C (260°F) in order to bend without kinking.

• Heat a length of conduit equal to approximately 10 times the nominal diameter.

• Once the Rigid PVC Conduit has been adequately heated, bend it to the required angle plus 3 extra degrees. The additional angle will accommodate the "spring back" which will occur during cooling.

• After bending of the conduit is completed, immediately cool the bend using water or cold air.

• According to the Canadian Electrical Code (CEC) and the National Electrical Code (NEC), the minimum bending radius for rigid conduit is as shown in the table below.

Nominal Size mm (in)	Min. Radius to Centre of Conduit or Tubing mm (in)
16 (½)	102 (4.016)
21 (¾)	114 (4.489)
27 (1)	146 (5.748)
35 (1¼)	184 (7.244)
41 (1½)	210 (8.268)
53 (2)	241 (9.488)
63 (2½)	267 (10.512)
78 (3)	330 (12.992)
91 (3½)	381 (14.606)
103 (4)	406 (15.984)
129 (5)	610 (24.016)
155 (6)	762 (30.000)





Procedure for Solvent Welding Joints

• Use solvent cement and primer prior to expiration date marked on container.

• Above 0° C ambient temperature, joints may be assembled without the use of primer, provided adequate penetration and softening of the pipe/fitting surface can be achieved with solvent cement alone.

1. Assemble materials for the job, including correct solvent cement, primer and correctly sized applicator.

2. Cut pipe as square as possible using a hand saw and miter box or mechanical saw. Do not use a diagonal cut, as it reduces the bonding area in the joint.

3. If plastic tubing cutters are used, care must be taken to remove any raised bead at the end of the pipe, caused by cutting. A file or reamer may be used to remove the bead.

4. Use a knife, file or reamer to remove burrs from the inside and outside of the pipe end, as these will hinder the integrity of the joint. All sharp edges should be removed from the inside and outside edges of the pipe to prevent the pipe from pushing the solvent cement into the fitting socket, thereby causing a weak spot to form. The pipe end should be chamfered, as shown below.

Chamfered Pipe

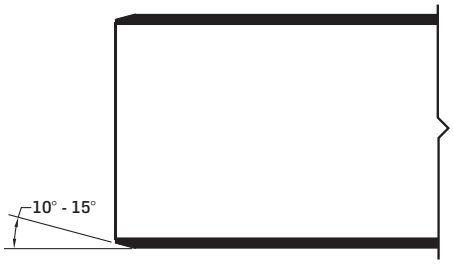

Procedure for Solvent Welding Joints Continued

5. All dirt, grease and moisture should be removed from the pipe and socket by thoroughly wiping with a clean, dry cloth.

6. Dry fit pipe and fitting joints prior to cementing. For proper interference fit, the pipe should go easily into the socket approximately ⅓ to ⅔ of the socket depth. If this is not the case, other pipe or fittings should be used.

7. The applicator should be sized according to the size of pipe and fittings being joined. The brush width of the applicator should be equal to approximately ½ of the pipe diameter.

8. Primer is used to penetrate and soften the surfaces so that they will fuse together under a wide variety of conditions. The penetration or softening can be checked by dragging the edge of a knife or sharp object over the coated surface. If a few thousandths of an inch of the primed surface can be scratched or scraped away, proper penetration has occurred. Varying weather conditions affect priming and cementing action and may require more time or repeated applications to either or both surfaces.

9. If using primer, use the correct applicator size (see #7) and aggressively work the primer into the socket, keeping the surface and applicator wet until the surface has softened, re-dipping the applicator as required. When the surface is primed, remove any puddles of primer from the socket.

10. Aggressively work the primer on to the end of the pipe, to a point ½" beyond the depth of the socket.

11. Perform a second application of primer in the socket.

12. While the surfaces are still wet, the appropriate solvent cement should be applied.

13. Using the correct applicator size, aggressively work a full, even layer of cement onto the pipe end to a point equal to the depth of the socket. Do not brush out to a thin paint type layer, as this will dry within a few seconds.

14. Aggressively work a medium layer of cement into the fitting socket; avoid puddling cement in the socket. On the pipe end, do not coat beyond the socket depth or allow cement to run down into the pipe beyond the socket.

15. Apply a second full, even layer of cement on the pipe.

16. Immediately, while the cement is still wet, assemble the joint. Use enough force to ensure that the pipe is fully inserted into the socket. Twist the pipe a ¼ turn as it is being inserted.

17. Hold the joint together for approximately 30 seconds to avoid push out.

18. After assembly, inspect the joint to ensure that there is a ring or bead of cement completely around the juncture of the pipe and socket. If there are voids in this ring, sufficient cement was not applied and the joint may be defective.

19. Remove the excess cement from the pipe and socket (including the ring or bead) using a cloth. Avoid disturbing or moving the joint.

20. Handle newly cemented joints with care until initial set has taken place. Follow set and cure times before handling or testing the system.

Pipe Dimensions

Nominal Size mm (in)	Avg. Outside Diameter mm (in)	Avg. Inside Diameter mm (in)	Avg. Wall Thickness mm (in)	Approx. Weight lb/100ft (kg/m)
12 (½)	21 (0.840)	15 (0.608)	3 (0.116)	16.1 (0.24)
19 (¾)	27 (1.050)	21 (0.810)	3 (0.120)	21.5 (0.32)
25 (1)	33 (1.315)	26 (1.033)	4 (0.141)	31.9 (0.47)
32 (1¼)	42 (1.660)	35 (1.362)	4 (0.149)	43.8 (0.65)
38 (1½)	48 (1.900)	40 (1.592)	4 (0.154)	52.3 (0.78)
50 (2)	60 (2.375)	52 (2.049)	4 (0.163)	70.3 (1.05)
63 (2½)	73 (2.875)	62 (2.445)	5 (0.215)	112.0 (1.61)
75 (3)	89 (3.500)	77 (3.042)	6 (0.229)	146.7 (2.18)
90 (3½)	102 (4.000)	89 (3.520)	6 (0.240)	176.4 (2.63)
100 (4)	114 (4.500)	102 (3.998)	6 (0.251)	208.9 (3.11)
125 (5)	141 (5.565)	127 (5.017)	7 (0.274)	283.4 (4.22)
150 (6)	168 (6.625)	153 (6.031)	8 (0.297)	368.0 (5.48)

Specification

All wiring shall be installed in Royal Electrical Solutions Rigid PVC Conduit and secured with proper fittings. All conduit and fittings shall be manufactured by Royal Building Products, Pipe & Fittings Solutions. All outlets, pull boxes and junction points shall be Royal products.

Exposed conduit shall be securely attached and supported with straps that are installed at the recommended spacing specified in CEC Section 12-1114. The straps must allow for linear expansion and contraction of the conduit due to temperature change. If the variance in temperature exceeds 14°C (25°F), expansion joints shall be installed according to the manufacturer's recommendations.

If Rigid PVC Conduit is embedded in concrete or direct buried, support straps are not required.

Solvent Cementing

All connections should be made using and applying Royal Electrical Solutions solvent cement.

Set Times

Average Initial Set Times			
Temperature Range	Pipe Sizes ½" to 1¼"	Pipe Sizes 1½" to 2"	Pipe Sizes 2½" to 6"
15°C to 40°C	2 min.	5 min.	30 min.
5°C to 15°C	5 min.	10 min.	2 hrs.
-16°C to 5°C	10 min.	15 min.	12 hrs.

Joint Cure Schedule

Average Joint Cure Times			
Temperature Range During Assembly & Cure Periods	Pipe Sizes ½" to 1¼"	Pipe Sizes 1½" to 2"	Pipe Sizes 2½" to 6"
15°C to 40°C	2 min.	5 min.	30 min.
5°C to 15°C	5 min.	10 min.	2 hrs.
-16°C to 5°C	10 min.	15 min.	12 hrs.

In damp or humid weather allow 50% more cure time.

Estimated Solvent Cement Requirements

Average Number of Joints per Litre of Solvent Cement									
Pipe/Fitting Diameter	½"	¾"	1"	1½"	2"	2½"	3"	4"	6"
Number of Joints	300	200	125	90	60	40	40	30	10

Estimated Primer Requirements

Average Number of Joints per Litre of Primer									
Pipe/Fitting Diameter	½"	¾"	1"	1½"	2"	2½"	3"	4"	6"
Number of Joints	600	400	250	180	120	80	80	60	20

Solvent Cementing in Cold Weather:

- Store pipe and fittings in a heated area. Prefabricate as much of the system as possible in a heated area.
- When not in use, store sealed solvent cement and primer between 5°C and 21°C. Do not use open flame or electric heaters to warm cements and primers.
- Take care to remove moisture, ice and snow from the mating surfaces.

Solvent Cementing in Hot Weather:

- At the time of assembly, the surface temperature of the mating surfaces should not exceed 45°C. Shade or shelter the joint surfaces from direct sunlight for at least 1 hour prior to joining and during the joining process. If necessary, swab the mating surfaces with clean, wet rags to reduce the surface temperature (thoroughly dry surfaces before applying primer or cement).
- Make joints during the cooler early morning hours.
- Apply cement quickly and join pipe to fitting as quickly as possible after applying the cement.
- Keep solvent cement container closed or covered when not in use, to minimize solvent loss.

Solvent Cementing in Wet Conditions:

- Mating surfaces must be dry when the joint is made.
- Work under a cover or canopy to keep rain off pipe and fittings.
- Work quickly after drying the pipe and fitting to avoid condensation.
- Allow a longer cure time before the system is tested or used.

Storage and Handling of Solvent Cement and Primer:

- Solvent cement and primer contain highly flammable solvents. Follow all specific safety precautions provided on container label and Material Safety Data Sheet.
- Keep primer and solvent cement away from heat, sparks and open flame.
- Keep containers tightly closed except when in use.
- Ensure proper ventilation of work area and avoid inhaling solvent vapours.
- Where the possibility of splashing exists, wear proper eye protection or a face shield.
- Avoid contact with skin.

Support Straps

Rigid PVC conduit must be supported with straps when installed in above ground applications. These straps should be installed snugly, while allowing linear movement of the conduit. See the table below for recommended maximum spacing of support straps.

Maximum Recommended Spacing of Support Straps		
Nominal Size mm (in)	CEC Recommended Spacing ft (m)	NEC Recommended Spacing ft (m)
16 (½)	2½ (0.75)	3 (0.91)
21 (¾)	2½ (0.75)	3 (0.91)
27 (1)	2½ (0.75)	3 (0.91)
35 (1¼)	4 (1.20)	5 (1.50)
41 (1½)	4 (1.20)	5 (1.50)
53 (2)	6 (1.80)	5 (1.50)
63 (2½)	6 (1.80)	3 - 6 (1.80)
78 (3)-129 (5)	7 (2.10)	3½ - 5 (2.10)
155 (6)	8 (2.50)	8 (2.50)

Rigid PVC Conduit Pipe & Fittings

A system for residential, industrial, commercial and institutional applications.







ROYAL® Electrical Solutions

ROYAL Electrical Solutions

Table of Contents



Product Description - Features and Benefits	1
Installation Guidelines - Solvent Welding Joints	2
Solvent Welding Joints/Pipe Dimensions/Specs	3
Solvent Cementing	4
Expansion and Contraction	5
Setting the Piston Opening	6
Fittings - Bends (Bell End)	7-8
Fittings - Miscellaneous	9-18

Note: This brochure is not intended to assume the authority of the Design Engineer. Actual jobsite conditions will vary significantly. The sole responsibility for all design and installation decisions lies with the Design Engineer. All local health and safety regulations must be followed.

Rigid PVC Conduit Pipe & Fittings

A system for residential, industrial, commercial and institutional applications.

Product Description & Applications

Royal Building Products® Electrical Solutions manufactures a complete line of Rigid PVC Conduit pipe and fittings for electrical applications. Our products are designed to reduce labour and maintenance costs, while offering superior performance.

Products are certified by the Canadian Standards Association (CSA) and Underwriters Laboratories (UL) for use in above and below ground applications. Our Rigid PVC conduit pipe and fittings are available in 12 to 150mm (½- to 6-inch) diameters and 3- or 6-metre (10- or 20-foot) lengths.

Standards and Codes

Royal Electrical Solutions Rigid PVC Conduit pipe and fittings are certified to CSA Standards as noted below. Our Rigid PVC conduit pipe and fittings shall be installed according to the Canadian Electrical Code (CEC) Part I, Rules 12-1100 - 12-1122 and the National Electrical Code (NEC) Article 352.

Pipe	Fittings
C22.2 No. 211.2	C22.2 No. 18.2, 85 (Boxes) No. 40 (Electrical Encl.) No. 42.1 (Covers) No. 85 (Fittings)
UL 651	UL 514C (Boxes) UL 50 (Electrical Encl.) UL 514D (Covers) UL 651 (Fittings)
Conforms to NEMA TC2	





Features and Benefits

Saves Labour

Rigid PVC Conduit pipe and fittings are easy to install, cut and join.

Easy Wire Pulls

The conduit's smooth interior surface reduces friction and prevents damage to wires when pulling wire and conductors for long runs and even through 90° bends.

Lightweight Materials

Rigid PVC Conduit is easier to move and handle because it is approximately one-fifth the weight of steel and half the weight of aluminum.

Approximate Weight Comparison

Size mm (in)	PVC lb/100ft (kg/m)	Aluminum lb/100ft (kg/m)	Steel lb/100ft (kg/m)
12 (½)	16.1 (0.24)	27 (0.40)	79 (1.20)
19 (¾)	21.5 (0.32)	37 (0.55)	105 (1.55)
25 (1)	31.9 (0.47)	53 (0.80)	153 (2.30)
32 (1¼)	43.8 (0.65)	70 (1.05)	201 (3.00)
38 (1½)	52.3 (0.78)	86 (1.30)	249 (3.70)
50 (2)	70.3 (1.05)	116 (1.75)	334 (5.00)
63 (2½)	112.0 (1.61)	183 (2.75)	527 (7.85)
75 (3)	146.7 (2.18)	239 (3.55)	690 (10.25)
90 (3½)	176.4 (2.63)	288 (4.30)	831 (12.40)
100 (4)	208.9 (3.11)	340 (5.10)	982 (14.60)
125 (5)	283.4 (4.22)	465 (6.90)	1,344 (20.40)
150 (6)	368.0 (5.48)	613 (9.10)	1,771 (26.35)

Simplifies Direct Burial

Royal Electrical Solutions Rigid PVC Conduit does not require additional protection for direct burial installations according to the Canadian Electrical Code (CEC) and the National Electrical Code (NEC). Normal construction practices should be followed for trenching and backfill operations.

Non-Conductive

Rigid PVC Conduit is non-conductive.

Long Life

Royal Rigid PVC Conduit and fittings resist acids, alkalis, salt solutions and most other chemicals. (Refer to the Royal Chemical Resistance Guide for detailed information.) There is no risk of corrosion when exposed to naturally corrosive soil conditions, electrochemical or galvanic environments. Royal's Rigid PVC Conduit has achieved sunlight resistance as per the requirements of the Electrical Code.

FT-4 Rating

Rigid PVC Conduit pipe has an FT-4 Rating and can be used in non-combustible construction as per Part 3 of the National Building Code of Canada (NBC).

Installation Guidelines

Cutting

Royal Rigid PVC Conduit can easily be cut with a hacksaw, a fine-toothed handsaw or PVC conduit cutters. For conduit with more than a 50mm (2-inch) diameter, use a mitre box or saw guide to ensure a square cut. Deburr the end using a knife or file.

Bending

It may be necessary to create bends in the field by heating and deforming Rigid PVC Conduit. To accomplish this, the following guidelines should be followed:

• For heating the Rigid PVC Conduit, use a heat gun or some other flameless heat source. Do not use an open flame to heat the conduit. Rigid PVC Conduit must be heated to approximately 127°C (260°F) in order to bend without kinking.

• Heat a length of conduit equal to approximately 10 times the nominal diameter.

• Once the Rigid PVC Conduit has been adequately heated, bend it to the required angle plus 3 extra degrees. The additional angle will accommodate the "spring back" which will occur during cooling.

• After bending of the conduit is completed, immediately cool the bend using water or cold air.

• According to the Canadian Electrical Code (CEC) and the National Electrical Code (NEC), the minimum bending radius for rigid conduit is as shown in the table below.

Nominal Size mm (in)	Min. Radius to Centre of Conduit or Tubing mm (in)
16 (½)	102 (4.016)
21 (¾)	114 (4.489)
27 (1)	146 (5.748)
35 (1¼)	184 (7.244)
41 (1½)	210 (8.268)
53 (2)	241 (9.488)
63 (2½)	267 (10.512)
78 (3)	330 (12.992)
91 (3½)	381 (14.606)
103 (4)	406 (15.984)
129 (5)	610 (24.016)
155 (6)	762 (30.000)





Procedure for Solvent Welding Joints

• Use solvent cement and primer prior to expiration date marked on container.

• Above 0° C ambient temperature, joints may be assembled without the use of primer, provided adequate penetration and softening of the pipe/fitting surface can be achieved with solvent cement alone.

1. Assemble materials for the job, including correct solvent cement, primer and correctly sized applicator.

2. Cut pipe as square as possible using a hand saw and miter box or mechanical saw. Do not use a diagonal cut, as it reduces the bonding area in the joint.

3. If plastic tubing cutters are used, care must be taken to remove any raised bead at the end of the pipe, caused by cutting. A file or reamer may be used to remove the bead.

4. Use a knife, file or reamer to remove burrs from the inside and outside of the pipe end, as these will hinder the integrity of the joint. All sharp edges should be removed from the inside and outside edges of the pipe to prevent the pipe from pushing the solvent cement into the fitting socket, thereby causing a weak spot to form. The pipe end should be chamfered, as shown below.

Chamfered Pipe

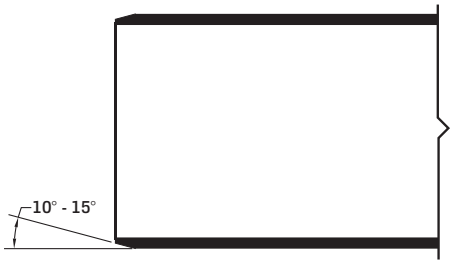

Procedure for Solvent Welding Joints Continued

5. All dirt, grease and moisture should be removed from the pipe and socket by thoroughly wiping with a clean, dry cloth.

6. Dry fit pipe and fitting joints prior to cementing. For proper interference fit, the pipe should go easily into the socket approximately ⅓ to ⅔ of the socket depth. If this is not the case, other pipe or fittings should be used.

7. The applicator should be sized according to the size of pipe and fittings being joined. The brush width of the applicator should be equal to approximately ½ of the pipe diameter.

8. Primer is used to penetrate and soften the surfaces so that they will fuse together under a wide variety of conditions. The penetration or softening can be checked by dragging the edge of a knife or sharp object over the coated surface. If a few thousandths of an inch of the primed surface can be scratched or scraped away, proper penetration has occurred. Varying weather conditions affect priming and cementing action and may require more time or repeated applications to either or both surfaces.

9. If using primer, use the correct applicator size (see #7) and aggressively work the primer into the socket, keeping the surface and applicator wet until the surface has softened, re-dipping the applicator as required. When the surface is primed, remove any puddles of primer from the socket.

10. Aggressively work the primer on to the end of the pipe, to a point ½" beyond the depth of the socket.

11. Perform a second application of primer in the socket.

12. While the surfaces are still wet, the appropriate solvent cement should be applied.

13. Using the correct applicator size, aggressively work a full, even layer of cement onto the pipe end to a point equal to the depth of the socket. Do not brush out to a thin paint type layer, as this will dry within a few seconds.

14. Aggressively work a medium layer of cement into the fitting socket; avoid puddling cement in the socket. On the pipe end, do not coat beyond the socket depth or allow cement to run down into the pipe beyond the socket.

15. Apply a second full, even layer of cement on the pipe.

16. Immediately, while the cement is still wet, assemble the joint. Use enough force to ensure that the pipe is fully inserted into the socket. Twist the pipe a ¼ turn as it is being inserted.

17. Hold the joint together for approximately 30 seconds to avoid push out.

18. After assembly, inspect the joint to ensure that there is a ring or bead of cement completely around the juncture of the pipe and socket. If there are voids in this ring, sufficient cement was not applied and the joint may be defective.

19. Remove the excess cement from the pipe and socket (including the ring or bead) using a cloth. Avoid disturbing or moving the joint.

20. Handle newly cemented joints with care until initial set has taken place. Follow set and cure times before handling or testing the system.

Pipe Dimensions

Nominal Size mm (in)	Avg. Outside Diameter mm (in)	Avg. Inside Diameter mm (in)	Avg. Wall Thickness mm (in)	Approx. Weight lb/100ft (kg/m)
12 (½)	21 (0.840)	15 (0.608)	3 (0.116)	16.1 (0.24)
19 (¾)	27 (1.050)	21 (0.810)	3 (0.120)	21.5 (0.32)
25 (1)	33 (1.315)	26 (1.033)	4 (0.141)	31.9 (0.47)
32 (1¼)	42 (1.660)	35 (1.362)	4 (0.149)	43.8 (0.65)
38 (1½)	48 (1.900)	40 (1.592)	4 (0.154)	52.3 (0.78)
50 (2)	60 (2.375)	52 (2.049)	4 (0.163)	70.3 (1.05)
63 (2½)	73 (2.875)	62 (2.445)	5 (0.215)	112.0 (1.61)
75 (3)	89 (3.500)	77 (3.042)	6 (0.229)	146.7 (2.18)
90 (3½)	102 (4.000)	89 (3.520)	6 (0.240)	176.4 (2.63)
100 (4)	114 (4.500)	102 (3.998)	6 (0.251)	208.9 (3.11)
125 (5)	141 (5.565)	127 (5.017)	7 (0.274)	283.4 (4.22)
150 (6)	168 (6.625)	153 (6.031)	8 (0.297)	368.0 (5.48)

Specification

All wiring shall be installed in Royal Electrical Solutions Rigid PVC Conduit and secured with proper fittings. All conduit and fittings shall be manufactured by Royal Building Products, Pipe & Fittings Solutions. All outlets, pull boxes and junction points shall be Royal products.

Exposed conduit shall be securely attached and supported with straps that are installed at the recommended spacing specified in CEC Section 12-1114. The straps must allow for linear expansion and contraction of the conduit due to temperature change. If the variance in temperature exceeds 14°C (25°F), expansion joints shall be installed according to the manufacturer's recommendations.

If Rigid PVC Conduit is embedded in concrete or direct buried, support straps are not required.

Solvent Cementing

All connections should be made using and applying Royal Electrical Solutions solvent cement.

Set Times

Average Initial Set Times			
Temperature Range	Pipe Sizes ½" to 1¼"	Pipe Sizes 1½" to 2"	Pipe Sizes 2½" to 6"
15°C to 40°C	2 min.	5 min.	30 min.
5°C to 15°C	5 min.	10 min.	2 hrs.
-16°C to 5°C	10 min.	15 min.	12 hrs.

Joint Cure Schedule

Average Joint Cure Times			
Temperature Range During Assembly & Cure Periods	Pipe Sizes ½" to 1¼"	Pipe Sizes 1½" to 2"	Pipe Sizes 2½" to 6"
15°C to 40°C	2 min.	5 min.	30 min.
5°C to 15°C	5 min.	10 min.	2 hrs.
-16°C to 5°C	10 min.	15 min.	12 hrs.

In damp or humid weather allow 50% more cure time.

Estimated Solvent Cement Requirements

Average Number of Joints per Litre of Solvent Cement									
Pipe/Fitting Diameter	½"	¾"	1"	1½"	2"	2½"	3"	4"	6"
Number of Joints	300	200	125	90	60	40	40	30	10

Estimated Primer Requirements

Average Number of Joints per Litre of Primer									
Pipe/Fitting Diameter	½"	¾"	1"	1½"	2"	2½"	3"	4"	6"
Number of Joints	600	400	250	180	120	80	80	60	20

Solvent Cementing in Cold Weather:

- Store pipe and fittings in a heated area. Prefabricate as much of the system as possible in a heated area.
- When not in use, store sealed solvent cement and primer between 5°C and 21°C. Do not use open flame or electric heaters to warm cements and primers.
- Take care to remove moisture, ice and snow from the mating surfaces.

Solvent Cementing in Hot Weather:

- At the time of assembly, the surface temperature of the mating surfaces should not exceed 45°C. Shade or shelter the joint surfaces from direct sunlight for at least 1 hour prior to joining and during the joining process. If necessary, swab the mating surfaces with clean, wet rags to reduce the surface temperature (thoroughly dry surfaces before applying primer or cement).
- Make joints during the cooler early morning hours.
- Apply cement quickly and join pipe to fitting as quickly as possible after applying the cement.
- Keep solvent cement container closed or covered when not in use, to minimize solvent loss.

Solvent Cementing in Wet Conditions:

- Mating surfaces must be dry when the joint is made.
- Work under a cover or canopy to keep rain off pipe and fittings.
- Work quickly after drying the pipe and fitting to avoid condensation.
- Allow a longer cure time before the system is tested or used.

Storage and Handling of Solvent Cement and Primer:

- Solvent cement and primer contain highly flammable solvents. Follow all specific safety precautions provided on container label and Material Safety Data Sheet.
- Keep primer and solvent cement away from heat, sparks and open flame.
- Keep containers tightly closed except when in use.
- Ensure proper ventilation of work area and avoid inhaling solvent vapours.
- Where the possibility of splashing exists, wear proper eye protection or a face shield.
- Avoid contact with skin.

Support Straps

Rigid PVC conduit must be supported with straps when installed in above ground applications. These straps should be installed snugly, while allowing linear movement of the conduit. See the table below for recommended maximum spacing of support straps.

Maximum Recommended Spacing of Support Straps		
Nominal Size mm (in)	CEC Recommended Spacing ft (m)	NEC Recommended Spacing ft (m)
16 (½)	2½ (0.75)	3 (0.91)
21 (¾)	2½ (0.75)	3 (0.91)
27 (1)	2½ (0.75)	3 (0.91)
35 (1¼)	4 (1.20)	5 (1.50)
41 (1½)	4 (1.20)	5 (1.50)
53 (2)	6 (1.80)	5 (1.50)
63 (2½)	6 (1.80)	3 - 6 (1.80)
78 (3)-129 (5)	7 (2.10)	3½ - 5 (2.10)
155 (6)	8 (2.50)	8 (2.50)

Storing Conduit Pipe and Fittings

Store Rigid PVC conduit pipe and fittings at the same temperature. Otherwise they may expand and contract at different rates and become incompatible.

Maximum Operating Temperatures

According to the Canadian Electrical Code (CEC), Rigid PVC conduit is intended for use at a continuous operating temperature of 75°C (167°F). For US applications, our Rigid PVC conduit is rated for use with 90°C wiring, according to the requirements of the NEC.

Ambient Temperatures

Royal Electrical Solutions Rigid PVC Conduit and fittings can be installed in locations with an ambient temperature not exceeding 50°C (122°F).

Expansion Joints

According to the CEC, if the amount of expansion expected due to temperature variance during and after construction is more than 45mm, expansion joints must be used.

Expected Expansion

The coefficient of linear expansion for Rigid PVC conduit is as follows:

3×10^{-5} in (expansion/contraction) / in (pipe length) /°F (change in temperature),

5.4×10^{-5} mm (expansion/contraction)/mm (pipe length)/°C (change in temperature)





Note:

The following chart shows the amount of expansion expected with various pipe lengths/temperature changes. If the Rigid PVC Conduit is installed in an exposed location, 17°C (30°F) should be added to the amount of temperature change (ΔT) due to the effects of radiant heat.

Expansion/Contraction of PVC (mm)

Length of Pipe Run (m)

ΔT (°C)	2	4	6	8	10	12	14	16	18	20
5	0.54	1.08	1.62	2.16	2.70	3.24	3.78	4.32	4.86	5.40
10	1.08	2.16	3.24	4.32	5.40	6.48	7.56	8.64	9.72	10.80
15	1.62	3.24	4.86	6.48	8.10	9.72	11.34	12.96	14.58	16.20
20	2.16	4.32	6.48	8.64	10.80	12.96	15.12	17.28	19.44	21.60
25	2.70	5.40	8.10	10.80	13.50	16.20	18.90	21.60	24.30	27.00
30	3.24	6.48	9.72	12.96	16.20	19.44	22.68	25.92	29.16	32.40
35	3.78	7.56	11.34	15.12	18.90	22.68	26.46	30.24	34.02	37.80
40	4.32	8.64	12.96	17.28	21.60	25.92	30.24	34.56	38.88	43.20
45	4.86	9.72	14.58	19.44	24.30	29.16	34.02	38.88	43.74	48.60
50	5.40	10.80	16.20	21.60	27.00	32.40	37.80	43.20	48.60	54.00

Expansion/Contraction of PVC (in)

Length of Pipe Run (ft)

ΔT (°F)	5	10	15	20	25	30	35	40	45	50
5	0.01	0.02	0.03	0.04	0.05	0.05	0.06	0.07	0.08	0.09
10	0.02	0.04	0.05	0.07	0.09	0.11	0.13	0.14	0.16	0.18
15	0.03	0.05	0.08	0.11	0.14	0.16	0.19	0.22	0.24	0.27
20	0.04	0.07	0.11	0.14	0.18	0.22	0.25	0.29	0.32	0.36
25	0.05	0.09	0.14	0.18	0.23	0.27	0.32	0.36	0.41	0.45
30	0.05	0.11	0.16	0.22	0.27	0.32	0.38	0.43	0.49	0.54
35	0.06	0.13	0.19	0.25	0.32	0.38	0.44	0.50	0.57	0.63
40	0.07	0.14	0.22	0.29	0.36	0.43	0.50	0.58	0.65	0.72
45	0.08	0.16	0.24	0.32	0.41	0.49	0.57	0.65	0.73	0.81
50	0.09	0.18	0.27	0.36	0.45	0.54	0.63	0.72	0.81	0.90

Required Number of Expansion Joints

The following table shows the amount of travel that is available with each trade size of Royal Electrical Solutions Rigid PVC conduit expansion joints:

Part Number	Description in	Travel Allowance mm (in)
REJ10	½" Expansion Joint	102 (4)
REJ15	¾" Expansion Joint	102 (4)
REJ20	1" Expansion Joint	102 (4)
REJ25	1¼" Expansion Joint	102 (4)
REJ30	1½" Expansion Joint	102 (4)
REJ35	2" Expansion Joint	102 (4)
REJ40	2½" Expansion Joint	102 (4)
REJ45	3" Expansion Joint	204 (8)
REJ50	3½" Expansion Joint	204 (8)
REJ55	4" Expansion Joint	204 (8)
REJ60	5" Expansion Joint	204 (8)
REJ65	6" Expansion Joint	204 (8)

The required number of expansion joints can be calculated using the following formula:

$$\#\ \text{Expansion Joints Required} = \frac{\text{Total Expected Amount of Expansion (in)}}{\text{Expansion Joint Travel Allowance (in)}}$$

$$\#\ \text{Expansion Joints Required} = \frac{\text{Total Expected Amount of Expansion (mm)}}{\text{Expansion Joint Travel Allowance (mm)}}$$

The number of expansion joints calculated above should be rounded up to the nearest whole number.

Setting the Piston Opening

Expansion joints must be installed such that they allow for both expansion and contraction of the conduit. The piston of the expansion joint must be set at the correct position to allow for this linear movement. To determine the correct position for the piston at the time and temperature of installation, the following formula should be used:

$$\text{Piston Setting (in)} = \frac{\text{(Max. Temp. (°F) – Install. Temp. (°F))}}{\text{Total Expected Temperature Change (°F)}} \times \left[\text{Expansion Joint Expansion Allow. (in)}\right]$$

$$\text{Piston Setting (mm)} = \frac{\text{(Max. Temp. (°C) – Install. Temp. (°C))}}{\text{Total Expected Temperature Change (°C)}} \times \left[\text{Expansion Joint Expansion Allow. (mm)}\right]$$

Installation Guidelines

• Securely fasten the expansion joint barrel so that it does not shift. Loosely connect the conduit so that it is free to move.

• To function properly, expansion joints should be installed near a fixed point.

• It is better to use more expansion joints than not enough, since problems are difficult to correct after conductors and wires have been pulled through the conduit.

• Ensure that the barrel and piston are aligned and level.

• For vertical installations of expansion joints, install with the piston at the bottom to prevent dirt and water from getting inside the joint and causing it to malfunction.

Installation Example

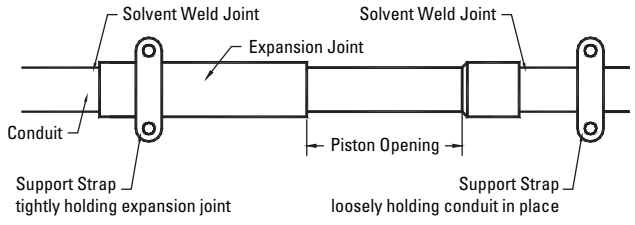

If one expansion joint is required:
Securely fasten the barrel of the expansion joint close to one of the boxes. Support the conduit with straps, but allow free movement of the conduit for expansion and contraction. (See Drawing 1)

If two expansion joints are required:
There are two options available:

1. Firmly fasten one expansion joint near each end of the run and firmly fasten the conduit at the centre. Support the rest of the conduit with straps allowing for movement of the conduit. (See Drawing 2)

2. Firmly fasten the expansion joints back-to-back at the centre of the run. The conduit should be supported with straps to allow free movements as it expands and contracts. (See Drawing 3)

If three or more expansion joints are required:
Evenly space the expansion joints along the run of Rigid PVC conduit. Tightly fasten each expansion joint and support the conduit with straps. Do not restrict the movement of the conduit.

*For information on Maximum Recommended Spacing of Support Straps, see page 4.

Drawings 1 - 4

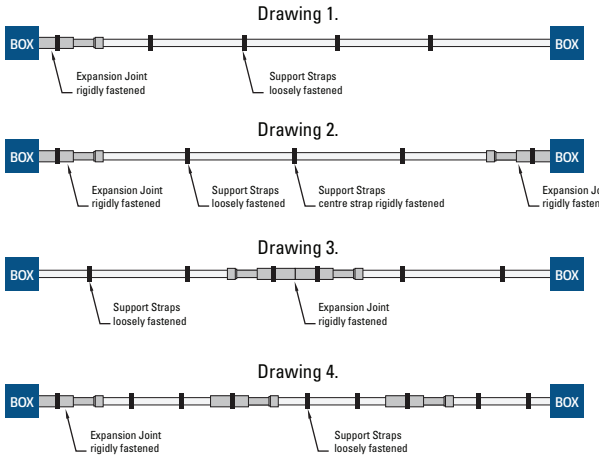

FITTINGS - Bends (Bell Ends)

90° Elbows - Bell End	Sizes (in)	Product Code	UPC Number	Diameter (D) (in)	Length (L) (in)	Radius (R) (in)
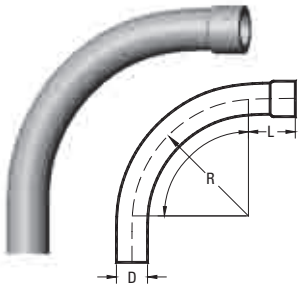	½	REE1090	46120	0.840	1.500	4.00
	¾	REE1590	46150	1.050	1.500	4.50
	1	REE2090	46180	1.315	1.875	5.75
	1¼	REE2590	46210	1.660	2.000	7.25
	1½	REE3090	46240	1.900	2.000	8.25
	2	REE3590	46270	2.375	2.000	9.50
	2½	REE4090	46330	2.875	3.000	10.50
	3	REE4590	46360	3.500	3.125	13.00
	3½	REE5090	46390	4.000	3.250	15.00
	4	REE5590	46420	4.500	3.375	16.00
	5	REE6090	46440	5.565	3.622	24.00
	6	REE6590	46460	6.625	3.740	30.00

45° Elbows - Bell End	Sizes (in)	Product Code	UPC Number	Diameter (D) (in)	Length (L) (in)	Radius (R) (in)
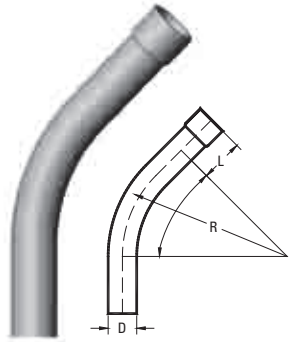	½	REE1045	46120	0.840	1.500	4.00
	¾	REE1545	46150	1.050	1.500	4.50
	1	REE2045	46180	1.315	1.875	5.75
	1¼	REE2545	46210	1.660	2.000	7.25
	1½	REE3045	46240	1.900	2.000	8.25
	2	REE3545	46270	2.375	2.000	9.50
	2½	REE4045	46330	2.875	3.000	10.50
	3	REE4545	46360	3.500	3.125	13.00
	3½	REE5045	46390	4.000	3.250	15.00
	4	REE5545	46420	4.500	3.375	16.00
	5	REE6045	46440	5.565	3.625	24.00
	6	REE6545	46460	6.625	3.750	30.00

30° Elbows - Bell End	Sizes (in)	Product Code	UPC Number	Diameter (D) (in)	Length (L) (in)	Radius (R) (in)
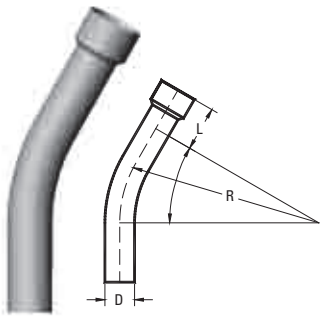	½	REE1030	46100	0.840	1.500	4.00
	¾	REE1530	46130	1.050	1.500	4.50
	1	REE2030	46160	1.315	1.875	5.75
	1¼	REE2530	46190	1.660	2.000	7.25
	1½	REE3030	46220	1.900	2.000	8.25
	2	REE3530	46274	2.375	2.000	9.50
	2½	REE4030	46310	2.875	3.000	10.50
	3	REE4530	46340	3.500	3.125	13.00
	3½	REE5030	46375	4.000	3.250	15.00
	4	REE5530	46400	4.500	3.375	16.00
	5	REE6030	46425	5.565	3.625	24.00
	6	REE6530	46442	6.625	3.750	30.00

Utilities 90° Elbows - Bell End	Sizes (in)	Product Code	UPC Number	Diameter (D) (in)	Length (L) (in)	Radius (R) (in)
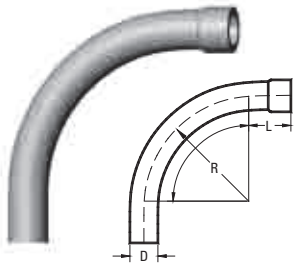	2	REE2-24	46501	2.375	41.20	24.00
	2	REE2-36	46502	2.375	31.70	36.00
	3	REE3-24	46503	3.500	41.20	24.00
	3	REE3-36	46504	3.500	31.70	36.00
	4	REE4-36	46465	4.500	31.70	36.00
	4	REE4-48	46505	4.500	31.70	48.00
	5	REE5-36	46506	5.565	31.70	36.00
	6	REE6-36	46507	6.625	31.70	36.00

Fittings - Bends (Plain Ends)

90° Elbows - Plain End	Sizes (in)	Product Code	UPC Number	Diameter (D) (in)	Length (L) (in)	Radius (R) (in)
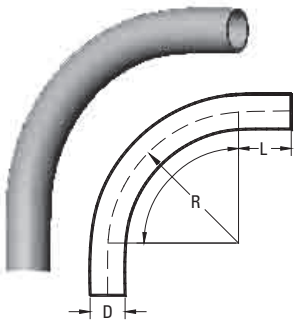	½	REE1090PE	46120	0.840	1.500	4.00
	¾	REE1590PE	46150	1.050	1.500	4.50
	1	REE2090PE	46180	1.315	1.875	5.75
	1¼	REE2590PE	46210	1.660	2.000	7.25
	1½	REE3090PE	46240	1.900	2.000	8.25
	2	REE3590PE	46270	2.375	2.000	9.50
	2½	REE4090PE	46330	2.875	3.000	10.50
	3	REE4590PE	46360	3.500	3.125	13.00
	3½	REE5090PE	46390	4.000	3.250	15.00
	4	REE5590PE	46420	4.500	3.375	16.00
	5	REE6090PE	46440	5.565	3.622	24.00
	6	REE6590PE	46460	6.625	3.740	30.00

45° Elbows - Plain End	Sizes (in)	Product Code	UPC Number	Diameter (D) (in)	Length (L) (in)	Radius (R) (in)
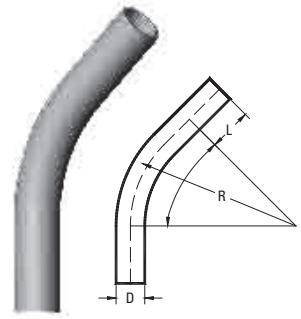	½	REE1045PE	46110	0.840	1.500	4.00
	¾	REE1545PE	46140	1.050	1.500	4.50
	1	REE2045PE	46170	1.315	1.875	5.75
	1¼	REE2545PE	46200	1.660	2.000	7.25
	1½	REE3045PE	46230	1.900	2.000	8.25
	2	REE3545PE	46280	2.375	2.000	9.50
	2½	REE4045PE	46320	2.875	3.000	10.50
	3	REE4545PE	46350	3.500	3.125	13.00
	3½	REE5045PE	46380	4.000	3.250	15.00
	4	REE5545PE	46415	4.500	3.375	16.00
	5	REE6045PE	46430	5.565	3.622	24.00
	6	REE6545PE	46450	6.625	3.740	30.00

30° Elbows - Plain End	Sizes (in)	Product Code	UPC Number	Diameter (D) (in)	Length (L) (in)	Radius (R) (in)
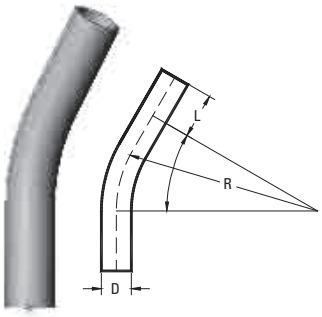	½	REE1030PE	46100	0.840	1.500	4.00
	¾	REE1530PE	46130	1.050	1.500	4.50
	1	REE2030PE	46160	1.315	1.875	5.75
	1¼	REE2530PE	46190	1.660	2.000	7.25
	1½	REE3030PE	46220	1.900	2.000	8.25
	2	REE3530PE	46274	2.375	2.000	9.50
	2½	REE4030PE	46310	2.875	3.000	10.50
	3	REE4530PE	46340	3.500	3.125	13.00
	3½	REE5030PE	46375	4.000	3.250	15.00
	4	REE5530PE	46400	4.500	3.375	16.00
	5	REE6030PE	46425	5.565	3.622	24.00
	6	REE6530PE	46442	6.625	3.740	30.00

45° Elbows - Extended Plain End	Sizes (in)	Product Code	UPC Number	Diameter (D) (in)	Length (L) (in)	Radius (R) (in)
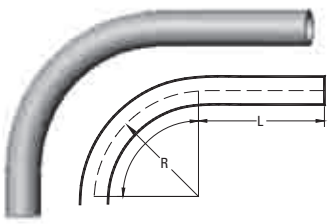	1¼	REE2590E	46125	1.660	14.750	7.25
	1½	REE3090E	46260	1.900	14.750	8.25
	2	REE3590E	43290	2.375	14.750	9.50

Fittings - Couplings and Adapters

Couplings	Sizes (in)	Product Code	UPC Number	Outside Diameter (OD) (in)	Inside Diameter (ID) (in)	Length (L) (in)
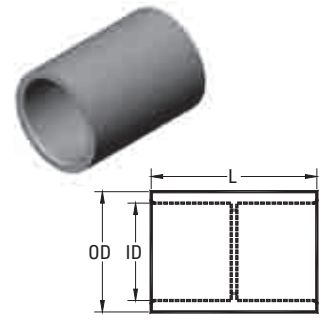	½	REC10	45950	1.080	0.840	1.437
	¾	REC15	45960	1.300	1.050	1.703
	1	REC20	45970	1.590	1.315	2.031
	1¼	REC25	45980	2.000	1.660	2.156
	1½	REC30	45990	2.230	1.900	2.281
	2	REC35	46000	2.720	2.375	2.406
	2½	REC40	46010	3.320	2.875	3.187
	3	REC45	46020	4.000	3.500	3.437
	3½	REC50	46030	4.500	4.000	3.625
	4	REC55	46060	5.000	4.500	3.750
	5	REC60	46080	6.120	5.565	4.187
	6	REC65	46090	7.370	6.625	4.562

5° Couplings *(*Fabricated)*	Sizes (in)	Product Code	UPC Number	Outside Diameter (OD) (in)	Inside Diameter (ID) (in)	Length (L) (in)
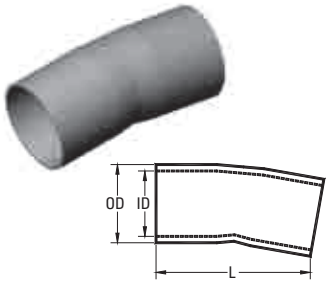	2	R5EC35	46800	2.375	2.049	4.0
	2½	R5EC40	46805	3.500	2.445	5.5
	3	R5EC45	46810	3.500	3.042	6.0
	3½	R5EC50	46815	4.500	3.521	7.0
	4	R5EC55	46820	4.500	3.998	7.0
	5	R5EC60	46825	5.565	5.018	7.5
	6	R5EC65	46830	6.625	6.031	11.0

Terminal Adapters (½" - 1¼" Tapered Thread, 6" NPT)	Sizes (in)	Product Code	UPC Number	A (in)	B (in)	Inside Diameter (ID) (in)	Thread (in)
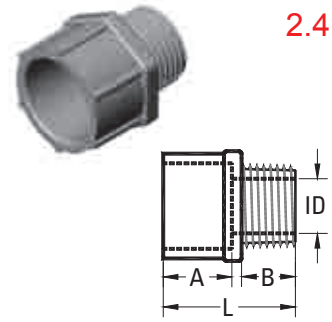	½	RTA10	45730	0.750	0.700	0.591	1.550
	¾	RTA15	45740	1.000	0.675	0.790	1.750
	1	RTA20	45750	1.115	0.625	1.000	1.860
	1¼	RTA25	45760	1.300	0.640	1.311	2.125
	1½	RTA30	45770	1.425	0.725	1.530	2.250
	2	RTA35	45780	1.150	0.800	1.970	2.100
	2½	RTA40	45790	1.900	0.800	2.346	2.930
	3	RTA45	45800	2.000	0.815	2.915	3.055
	3½	RTA50	45810	1.715	1.000	3.385	3.055
	4	RTA55	45820	1.990	0.815	3.850	3.215
	5	RTA60	45830	2.000	1.725	5.015	5.985
	6	RTA65	45840	2.130	1.875	6.025	6.500

Female Adapters (Npt Tapered Thread)	Sizes (in)	Product Code	UPC Number	A (in)	B (in)	Inside Diameter (ID) (in)	Thread (in)
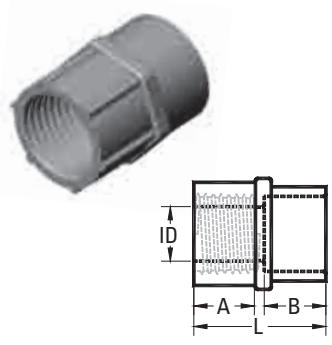	½	RFA10	44990	0.800	0.825	0.620	1.725
	¾	RFA15	45000	0.800	1.000	0.820	1.900
	1	RFA20	45010	1.000	1.200	1.065	2.300
	1¼	RFA25	45020	1.015	1.300	1.395	2.425
	1½	RFA30	45030	1.050	1.290	1.575	2.440
	2	RFA35	45040	1.075	1.375	2.050	2.550
	2½	RFA40	45050	1.675	1.985	2.470	3.760
	3	RFA45	45060	1.630	2.150	3.090	4.100
	3½	RFA50	45070	1.800	2.000	3.540	3.985
	4	RFA55	45080	1.755	2.185	4.025	4.210
	5	RFA60	45090	2.065	3.000	5.035	5.240
	6	RFA65	45100	2.065	3.000	6.045	5.235

Fittings - Expansions Joints, Straps and Meter Accessories

Expansion Joints

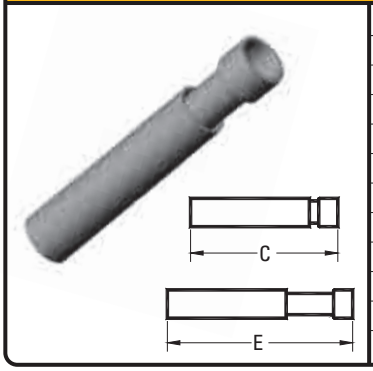

Sizes (in)	Product Code	UPC Number	Expanded Length (E) (in)	Contracted Length (C) (in)	Travel (in)
½	REJ10	44870	12.00	8.00	4.00
¾	REJ15	44880	12.00	8.00	4.00
1	REJ20	44890	12.50	8.50	4.00
1¼	REJ25	44900	13.00	9.00	4.00
1½	REJ30	44910	13.00	9.00	4.00
2	REJ35	44920	13.25	9.25	4.00
2½	REJ40	44930	13.25	9.25	4.00
3	REJ45	44940	22.25	14.25	8.00
3½	REJ50	44950	22.25	14.25	8.00
4	REJ55	44960	22.25	14.25	8.00
5	REJ60	44963	22.25	14.25	8.00
6	REJ65	44966	22.25	14.25	8.00

Expansion Joints

PVC	Sizes (in)	Product No.	UPC No.	PVC Coated Steel	Sizes (in)	Product No.	UPC No.	PVC Coated Steel	Sizes (in)	Product No.	UPC No.
2 Hole	½	RPS10	45540	2 Hole	2	RCS35	44783	1 Hole	½	RCS10-1	46850
	¾	RPS15	45550		2½	RCS40	44784		¾	RCS15-1	46852
	1	RPS20	45560		3	RCS45	44785		1	RCS20-1	46854
	1¼	RPS25	45570		3½	RCS50	44786		1¼	RCS25-1	46856
	1½	RPS30	45580		4	RCS55	44787		1½	RCS30-1	46858
	2	RPS35	45590		5	RCS60	44788		2	RCS35-1	46860
					6	RCS65	44789		2½	RCS40-1	46862
									3	RCS10-1	46864
									4	RCS10-1	46866

Meter Offsets



Sizes (in)	Product No.	UPC No.
1¼	RM025	45500
2	RM035	45510

Long Meter Offsets *(Fabricated)*



Sizes (in)	Product No.	UPC No.
1¼	RLM025	45472
1½	RML030	45474
2	RML035	45476

Service Entrance Fittings



Sizes (in)	Product No.	UPC No.
½	REF10	44795
¾	REF15	44800
1	REF20	44810
1¼	REF25	44820
1½	REF30	44830
2	REF35	44840
2½	REF40	44842
3	REF45	44844
3½	REF50	44852
4	REF55	44860

Meter Hubs



Sizes (in)	Product No.	UPC No.
1¼	RMHU25	45480
1½	RMHU30	45485
2	RMHU35	45490

Expansion & Deflection Fittings Assembly



Sizes (in)	Product No.	UPC No.
2	RSEJ35	46990
3	RSEJ45	46992
4	RSEJ55	46994

Ecovoc Solvent Cement *(*c/w Screw Cap & Dauber)*



Sizes (in)	Product No.	UPC No.	Carton Qty.
250ml	RVOC250*	54790	24
475ml	RVOC475*	54795	12
950ml	RVOC950*	54797	12
4L	RVOC4L	54799	4

Privoc Solvent Cement *(*c/w Screw Cap & Dauber)*



Sizes (in)	Product No.	UPC No.	Carton Qty.
250ml	RVOCPR250*	54800	24
475ml	RVOCPR475*	54802	12
950ml	RVOCPR950*	54804	12
4L	RVOCPR4L	54806	4

Fittings - Access Fittings

Type C	Sizes (in)	Product Code	UPC Number	A (in)	B (in)	C (in)	D (in)	E (in)
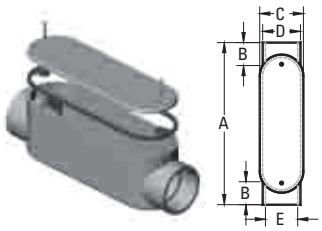	½	RSC10S	46600	5.606	0.639	1.268	1.100	0.840
	¾	RSC20S	46605	5.606	0.810	1.536	1.325	1.050
	1	RSC30S	46610	6.500	0.910	1.700	1.600	1.335
	1¼	RSC40S	46615	7.900	1.050	2.300	2.250	1.100
	1½	RSC50S	46620	8.500	1.125	2.675	2.250	1.900
	2	RSC60S	45605	10.875	1.160	3.188	2.820	2.375
	2½	RSC70S	45606	14.600	1.750	4.500	3.950	2.870
	3	RSC80S	45607	14.600	1.900	4.500	3.950	3.510
	3½	RSC90S	45609	17.040	2.125	5.536	5.000	4.000
	4	RSC100S	45608	17.040	2.125	5.536	5.000	4.530

Type LB	Sizes (in)	Product Code	UPC Number	A (in)	B (in)	C (in)	D (in)	E (in)	F (in)	G (in)	H (in)
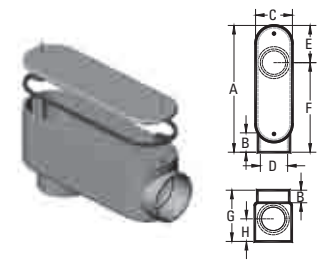	½	RSLB10S	45620	4.337	0.639	1.268	0.840	1.297	4.095	2.487	1.005
	¾	RSLB20S	45630	5.395	0.810	1.536	1.050	1.297	4.095	2.487	1.005
	1	RSLB30S	45640	6.250	0.910	1.700	1.335	1.500	4.750	2.075	1.125
	1¼	RSLB40S	45650	7.625	1.050	2.300	1.100	1.750	5.750	3.575	1.562
	1½	RSLB50S	45660	8.250	1.125	2.675	1.900	1.750	6.500	3.938	1.656
	2	RSLB60S	45670	10.531	1.160	3.188	2.375	2.344	8.156	4.535	1.968
	2½	RSLB70S	45675	13.630	1.750	4.500	2.870	2.733	9.825	6.240	2.610
	3	RSLB80S	45680	13.630	1.900	4.500	3.510	3.805	10.897	6.240	2.610
	3½	RSLB90S	45610	16.000	2.125	5.536	4.000	4.535	11.465	7.500	2.975
	4	RSLB100S	45681	16.000	2.125	5.536	4.530	4.535	11.465	7.500	2.975

Type LL	Sizes (in)	Product Code	UPC Number	A (in)	B (in)	C (in)	D (in)	E (in)	F (in)	G (in)
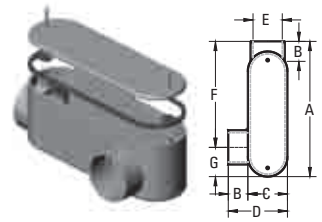	½	RSLL10S	46650	4.337	0.639	1.268	2.487	0.840	4.095	1.297
	¾	RSLL20S	46655	5.395	0.810	1.536	2.487	1.050	4.095	1.297
	1	RSLL30S	46660	6.250	0.910	1.700	2.075	1.335	4.750	1.500
	1¼	RSLL40S	46665	7.625	1.050	2.300	3.575	1.100	5.750	1.750
	1½	RSLL50S	46670	8.250	1.125	2.675	3.938	1.900	6.500	1.750
	2	RSLL60S	45682	10.531	1.160	3.188	4.535	2.375	8.156	2.344
	2½	RSLL70S	45672	13.630	1.750	4.500	6.240	2.870	9.825	3.805
	3	RSLL80S	46674	13.630	1.900	4.500	6.240	3.510	10.897	2.733
	3½	RSLL90S	46678	16.000	2.125	5.536	7.500	4.000	11.465	4.535
	4	RSLL100S	46676	16.000	2.125	5.536	7.500	4.530	11.465	4.535

Type LR	Sizes (in)	Product Code	UPC Number	A (in)	B (in)	C (in)	D (in)	E (in)	F (in)	G (in)
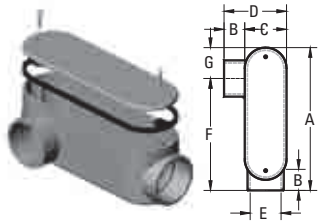	½	RSLR10S	46700	4.337	0.639	1.268	2.487	0.840	4.095	1.297
	¾	RSLR20S	46705	5.395	0.810	1.536	2.487	1.050	4.095	1.297
	1	RSLR30S	46710	6.250	0.910	1.700	2.075	1.335	4.750	1.500
	1¼	RSLR40S	46715	7.625	1.050	2.300	3.575	1.100	5.750	1.750
	1½	RSLR50S	46720	8.250	1.125	2.675	3.938	1.900	6.500	1.750
	2	RSLR60S	45683	10.531	1.160	3.188	4.535	2.375	8.156	2.344
	2½	RSLR70S	46725	13.630	1.750	4.500	6.240	2.870	9.825	3.805
	3	RSLR80S	46728	13.630	1.900	4.500	6.240	3.510	10.897	2.733
	3½	RSLR90S	46738	16.000	2.125	5.536	7.500	4.000	11.465	4.535
	4	RSLR100S	46735	16.000	2.125	5.536	7.500	4.530	11.465	4.535

Fittings - Access Fittings

Type E	Sizes (in)	Product Code	UPC Number	A (in)	B (in)	C (in)	D (in)
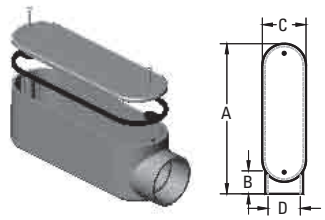	½	RSE10S	46630	4.337	0.639	1.268	0.840
	¾	RSE20S	46632	5.395	0.810	1.536	1.050
	1	RSE30S	46634	6.250	0.910	1.700	1.335
	1¼	RSE40S	46636	7.625	1.050	2.300	1.100
	1½	RSE50S	46638	8.250	1.125	2.675	1.900
	2	RSE60S	46640	10.351	1.160	3.188	2.375
	2½	RSE70S	46642	13.630	1.750	4.500	2.870
	3	RSE80S	46644	13.630	1.900	4.500	3.510
	3½	RSE90S	46648	16.000	2.125	5.536	4.000
	4	RSE100S	46646	16.000	2.125	5.536	4.530

Type T	Sizes (in)	Product Code	UPC Number	A (in)	B (in)	C (in)	D (in)
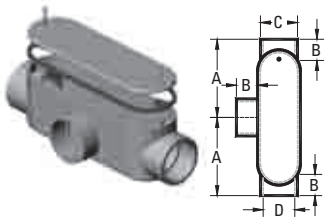	½	RST10S	45690	2.280	0.639	1.100	0.840
	¾	RST20S	45700	2.803	0.810	1.325	1.050
	1	RST30S	45710	3.250	0.910	1.600	1.335
	1¼	RST40S	45720	3.950	1.050	2.250	1.100
	1½	RST50S	45723	4.250	1.125	2.250	1.900
	2	RST60S	45725	5.438	1.160	2.820	2.375
	2½	RST70S	46745	7.300	1.750	3.950	2.870
	3	RST80S	46748	7.300	1.900	3.950	3.510
	3½	RST90S	46752	8.535	2.125	5.000	4.000
	4	RST100S	46750	8.535	2.125	5.000	4.530

Type TB	Sizes (in)	Product Code	UPC Number	A (in)	B (in)	C (in)	D (in)	E (in)	F (in)	G (in)	H (in)
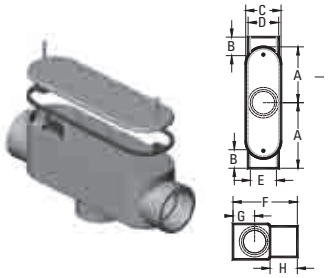	½	RSTB10S	45692	2.280	0.639	1.268	1.100	0.840	2.487	1.005	0.750
	¾	RSTB20S	45702	2.803	0.810	1.536	1.325	1.050	2.487	1.005	0.810
	1	RSTB30S	45712	3.250	0.910	1.700	1.600	1.335	2.075	1.125	1.115
	1¼	RSTB40S	45721	3.950	1.050	2.300	2.250	1.100	3.575	1.562	1.300
	1½	RSTB50S	45724	4.250	1.125	2.675	2.250	1.900	3.938	1.656	1.425
	2	RSTB60S	45727	5.438	1.160	3.188	2.820	2.375	4.535	1.968	1.160
	2½	RSTB70S	46760	7.300	1.750	4.500	3.950	2.870	6.240	2.610	-
	3	RSTB80S	46762	7.300	1.900	4.500	3.950	3.510	6.240	2.610	-
	3½	RSTB90S	46766	8.535	2.125	5.536	5.000	4.000	7.500	2.975	-
	4	RSTB100S	46764	8.535	2.125	5.536	5.000	4.530	7.500	2.975	-

Fittings - Cover Plates

Single Gang Cover Plates - F Series



Description	Product Code	UPC Number
Toggle Switch	RTSC15-10	45845
Duplex Receptacle	RDRC15-10R20	44685
Single Receptacle - 15 Amp	RC15-10R20-3	47035
Single Receptacle - 20 Amp	RC15-10R30-3	47036
Single Receptacle - 30 Amp	RC15-10	47037
Single Blank with Gasket	RBRC15-10	44680
Gasket	GASK15-10	44682

Double Gang Cover Plates - F Series



Description	Product Code	UPC Number
Double Switch	RTSC20-2	45846
Combo Switch/Receptacle	RTSDC20-2	45847
Double Duplex	RDRC20-2	44686
Double Blank with Gasket	RBRC20-2	44681
Gasket	GASK20-2	45949

Triple Gang Cover Plates - F Series



Description	Product Code	UPC Number
Triple Switch	RTSC20-3	45857
Double Switch Receptacle	RDSDR20-3	44689
Double Receptacle/Switch	RTSDC20-3	45858
Triple Receptacle	RDRC20-3	44688
Triple Blank with Gasket	RBRC20-3	44683
Gasket	GASK20-3	45859

Fittings - Weatherproof Cover Plates

Single Gang Weatherproof Cover Plates



RVSC15-10 RVSC15-10 RWTG15-10 RWGF15-10 RWTL RVSC15-10 GASK W

Description	Product Code	UPC Number
Toggle Switch Cover	RVSC15-10	45940
Plunger Switch Cover	RVPT15-10	45930
Toggle	RWTG15-10	45339
Duplex Receptacle	RWDR15-10	45093
Duplex Receptacle - White	RWDR15-10W	45094
Ground Fault Receptacle	RWGF15-10	45095
Ground Fault Receptacle - White	RWGF15-10W	45098
Single Receptacle - 15 Amp	RWTL15	45470
Single Receptacle - 20 Amp	RWTL20	45472
Single Receptacle - 30 Amp	RWTL30	45480
Single Receptacle - 50 Amp	RWTL50	45482
Gasket	GASK W	45484

Double Gang Weatherproof Cover Plates



RVSC20-2 RVSRC20-2 RVSDR20-2 RVSRR20-2 GASK20-2

Description	Product Code	UPC Number
Double Toggle	RVSC20-2	45941
Plunger/GFI	RVSRC20-2	45947
Plunger/Duplex Receptacle	RVSDR20-2	45945
Plunger/Single Receptacle	RVSRR20-2	45948
Gasket	GASK20-2	45949

Fittings - Slab Boxes

Single Gang Boxes - F Series



RFS



RFSS



RFSC



RFSCC

Description	Product Code	UPC Number	Volume (in3)
½" FS	RFS10	45200	17.0
¾" FS	RFS15	45210	17.0
½" FSS	RFSS10	45240	17.5
¾" FSS	RFSS15	45250	17.5
½" FSC	RFSC10	45220	16.3
¾" FSC	RFSC15	45230	16.3
½" FSCC	RFSCC10	45233	17.0
¾" FSCC	RFSCC15	45235	17.0

Single Gang Deep Boxes - FD Series



RFDS



RFDC



BLANK



347 VOLT

Outside Dimensions: Length = 4.5", Width = 6.6", Height = 2.5", except BLANK, L = 4.5", W = 6.6", H = 3.0"

Description	Product Code	UPC Number	Volume (in3)
½" FSC	RFSC3-10	45224	56.0
¾" FSC	RFSC3-15	45232	56.0
1" FSC	RFSC3-20	45228	56.0
½" FS	RFS3-10	45208	54.0
¾" FS	RFS3-15	45218	54.0
1" FS	RFS3-20	45219	54.0
BLANK	RFD-3	45155	73.8

Double Gang Boxes - F Series


FS


FSS


FSC


FSCC


BLANK

Outside Dimensions: Length = 4.5", Width = 4.75", Height = 2.5", except BLANK, L=4.75", W=4.75", H=3.0"

Description	Product Code	UPC Number	Volume (in3)
½" FS	RFS2-10	45205	39.5
¾" FS	RFS2-15	45215	39.5
1" FS	RFS2-20	45216	39.5
½" FSS	RFSS2-10	45242	37.0
¾" FSS	RFSS2-15	45244	37.0
1" FSS	RFSS2-20	45246	37.0
½" FSC	RFSC2-10	45222	37.0
¾" FSC	RFSC2-15	45231	37.0
1" FSC	RFSC2-20	45226	37.0
½" FSCC	RFSCC2-10	45234	36.0
¾" FSCC	RFSCC2-15	45238	36.0
1" FSCC	RFSCC2-20	45239	36.0
BLANK	RFD-D	45150	52.0

Triple Gang Boxes - F Series


FSC


FS


BLANK

Outside Dimensions: Length = 4.5", Width = 6.6", Height = 2.5", except BLANK, L = 4.5", W = 6.6", H = 3.0"

Description	Product Code	UPC Number	Volume (in3)
½" FSC	RFSC3-10	45224	56.0
¾" FSC	RFSC3-15	45232	56.0
1" FSC	RFSC3-20	45228	56.0
½" FS	RFS3-10	45208	54.0
¾" FS	RFS3-15	45218	54.0
1" FS	RFS3-20	45219	54.0
BLANK	RFD-3	45155	73.8

Octagonal Boxes



Size (in)	Product No.	UPC No.
4 x 1½	ROB15/10	45520
4 x 2	ROB20	45525
¾	RKO15	45450
1	RKO20	45455

Octagonal Box Extension Rings



Size (in)	Product No.	UPC No.
1	RXR20	46490
2	RXR35	46495

Junction Boxes With Gasket



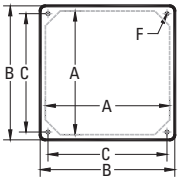



Nominal Size (in)	Product Number	UPC Number	Inside Length & Width (A) (in)	Outside Length & Width (B) (in)	Length Screw to Screw (C) (in)	Outside Height (E) (in)	Inside Height (D) (in)	Screw Size (F)	Volume (in3)
4 x 4 x 2	RJB442	45300	3.675	4.000	3.450	2.125	2.000	8-32	25.4
4 x 4 x 4	RJB444	45310	3.675	4.000	3.450	4.188	3.750	8-32	47.5
4 x 4 x 6	RJB446	45315	3.675	4.000	3.450	6.225	6.000	8-32	76.1
5 x 5 x 2	RJB552	45320	4.680	5.000	4.485	2.000	1.845	8-32	38.7
6 x 6 x 4	RJB664	45330	6.000	6.375	5.813	4.188	4.000	10-32	139.5
6 x 6 x 6	RJB666	45335	6.000	6.375	5.813	6.188	6.000	10-32	209.3
8 x 8 x 4	RJB884	45340	8.075	8.625	7.996	4.230	4.005	¼-20	258.6
8 x 8 x 7	RJB887	45350	8.100	8.625	7.996	7.250	7.035	¼-20	455.6
12 x 12 x 4	RJB12124	45280	12.085	12.580	11.874	4.256	4.030	¼-20	578.3
12 x 12 x 6	RJB12126	45290	12.085	12.580	11.874	6.240	6.025	¼-20	864.6
12 x 12 x 8	RJB12128	45295	12.085	12.580	11.874	8.250	8.025	¼-20	1151.6

Highway Boxes





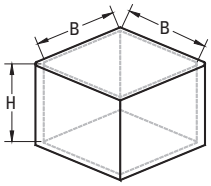

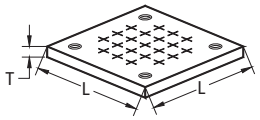

Nominal Size (in)	Product Number	UPC Number	Box Inside Length & Width (B) (in)	Box Inside Depth (H) (in)	Lid Length & Width (L) (in)	Thickness of Lid (T) (in)	Volume (in3)
6 x 6 x 4	H664	47040	6.0	4.25	9.0	0.60	139.5
6 x 6 x 6	H666	47041	6.0	6.25	9.0	0.60	209.3
8 x 8 x 4	H884	47042	8.0	4.25	11.5	0.75	258.6
8 x 8 x 6	H886	47043	8.0	6.25	11.5	0.75	400.0
8 x 8 x 7	H887	47044	8.0	7.25	11.5	0.75	455.6
8 x 8 x 7	H887-A	47045	8.0	7.25	11.5	0.75	418.4

Junction Box Adapters



Size (in)	Product No.	UPC No.
½	RJBA10	45360
¾	RJBA15	45370
1	RJBA20	45380
1¼	RJBA25	45390
1½	RJBA30	45400
2	RJBA35	45410
2½	RJBA40	45420
3	RJBA45	45430
3½	RJBA50	45435
4	RJBA55	45440

Duplex Floor Boxes & Cover (*Includes Leveling Ring)



Size (in)	Product No.	UPC No.
4 x ¾	RFDB4	46980
2 x ¾, 2 x 1	RFDB2	46982
Polycarbonate Bronze Cover	RFDBC	46984

Notes:

Our various pipe and fittings solutions have been manufactured to meet the needs of our customers and their applications. Contact one of the below Sales Centres for more information:

- Municipal Pipe & Fittings Solutions
- Plumbing Pipe & Fittings Solutions
- Electrical Pipe & Fittings Solutions
- Industrial Pipe & Fittings Solutions
- Irrigation Pipe & Fittings Solutions

Sales & Distribution Centres:

Langley, BC, Canada
T/F 1.800.663.0696
F 1.800.663.6564

Woodbridge, ON, Canada
T/F 1.866.769.7473
F 905.856.3986

Laval, QC, Canada
T/F 1.800.465.9754
F 450.688.6624

Distribution Centres:

Calgary, AB, Canada
T/F 1.800.663.0696
F 1.800.663.6564

Winnipeg, MB, Canada
T/F 1.800.663.0696
F 1.800.663.6564

royalelectricalca.com





MIX
Paper from responsible sources
FSC® C003472

E_RCPF_BRV4
Printed 02.2014

ROYAL® Building Products

Pipe & Fittings Solutions | Municipal Plumbing Electrical Industrial Irrigation

Electrical Non-Metallic PVC Products

PVC Fittings
ENT Pipe and Fittings
Enclosures

Category E Product BRV1
October, 2012

E Series







ROYAL Electrical Solutions

Contents

Rigid PVC Conduit Fittings

Pages 4 - 25

Shown in Alphabetical Order

Access Fittings 6-8
- Type C 6
- Type E 7
- Type LB 6
- Type LL 7
- Type LR 7
- Type T 8
- Type TB 8

Bell End (Hub X Spigot) - Molded 9
Coupling 4
5° Coupling 4
Double Gang Box - F Series 12
Double Gang Weatherproof Cover Plate 11
Duct - Base Vertical Lock Spacer 15
Duct - Intermediate Vertical Lock Spacer 14
Duplex Floor Box Cover 13
Duplex Floor Box 13
ECOVOC Low VOC / Clear Cement 15

Elbows 16-25
Schedule 40
- Radius Elbow Belled - 45° 24" Radius 22
- Special Radius Elbow Belled - 45° 36" Radius 22
- Special Radius Elbow Belled - 45° 48" Radius 22
- Special Radius Elbow Belled - 90° 24" Radius 21
- Special Radius Elbow Belled - 90° 36" Radius 21
- Special Radius Elbow Belled - 90° 48" Radius 22
- Special Radius Elbow Plain End - 45° 24" Radius 20
- Special Radius Elbow Plain End - 45° 36" Radius 21
- Special Radius Elbow Plain End - 45° 48" Radius 21
- Special Radius Elbow Plain End - 90° 24" Radius 19
- Special Radius Elbow Plain End - 90° 36" Radius 20
- Special Radius Elbow Plain End - 90° 48" Radius 20
- Standard Elbows - 11 1/4° Elbow - Plain End 17
- Standard Elbows - 22 1/2° Elbow - Plain End 17
- Standard Elbows - 30° Elbow - Bell End 18
- Standard Elbows - 30° Elbow - Plain End 17
- Standard Elbows - 45° Elbow - Bell End 18
- Standard Elbows - 45° Elbow - Plain End 16
- Standard Elbows - 90° Elbow - Bell End 18
- Standard Elbows - 90° Elbow - Plain End 16

Schedule 80
- Special Radius Elbow Belled - 45° 24" Radius 25
- Special Radius Elbow Belled - 45° 36" Radius 25
- Special Radius Elbow Belled - 45° 48" Radius 25
- Special Radius Elbow Belled - 90° 24" Radius 24
- Special Radius Elbow Belled - 90° 36" Radius 24
- Special Radius Elbow Belled - 90° 48" Radius 24
- Special Radius Elbow Plain End 23
- Special Radius Elbow Plain End - 45° 48" Radius 24
- Special Radius Elbow Plain End - 90° 24" Radius 22
- Special Radius Elbow Plain End - 90° 36" Radius 23
- Special Radius Elbow Plain End - 90° 48" Radius 23
- Standard Elbows - 45° Elbow - Plain End 19
- Standard Elbows - 90° Elbow - Plain End 19

Expansions Joint 5
Junction Box Adapters 13
Junction Box with Gasket 13
KO Plug 12
Meter Offset 5
Meter Riser Kit 14
Octagonal Box 12
Octagonal Box Extension Ring 12
Pipe Strap PVC - 2 Hole 5
Pull Elbow 9
Reducer Bushing 10
Service Entrance Fitting 6
Single Gang Box - F Series 11
Single Gang Cover Plate - F Series 10
Single Gang Deep Box - FD Series 11
Single Gang Weatherproof Cover Plate 11
Slip Meter Riser 14
Solvent Weld End Cap 9
Strain Relief Connector 8
Threaded Strain Relief Connector 8
Terminal Adapter 4
- Female 5
- Male 4

Threaded Reducer Bushing 9
Universal Plug w/Pulling Eye 15
Vinyl Siding Electrical Mount 16

Contents

Rigid PVC Conduit Fittings with Brass Fasteners

Pages 26 - 29

Shown in Alphabetical Order

Access Fitting
- Type C 26
- Type E 27
- Type LL 26
- Type LR 27
- Type T 27
- Type TB 27
- Type LB 26

Double Gang Box - F Serie 28
Double Gang Weatherproof Cover Plate 29
Junction Box with Gasket 28
Single Gang Box - F Series 28
Single Gang Cover Plate - F Series 29
Single Gang Deep Box - FD Series 28
Single Gang Weatherproof Cover Plate 29

ENT - Tubing

Pages 30 - 31

Shown in Alphabetical Order

Coils
- Blue ENT Tubing 30
- Grey ENT Tubing 30

Reels
- Blue ENT Tubing 30
- Grey ENT Tubing 31

Straight Length
- Blue ENT Tubing 31
- Grey ENT Tubing 31

ENT - Fittings

Pages 32 - 35

Shown in Alphabetical Order

45 Degree Angled Form Stubby (Polyethylene) 33
Adapter with set screw 32
Clip Ring 32
Coupling 32
Deep Single Gang Concrete Wall Box 35
Isolator Module Slab Box 34
Quick-Snap Terminal Adapter 32
Shallow Single Gang Concrete Wall Box 35
Shallow Slab Box 34
Slab Box Extension Ring 33
Slab Box with Hub Extensions and Grey Lid 34
Slab Box with Knockouts and Grey Lid 34
Threaded Terminal Adapter with Lock Nut 32
Heavy Duty Lock Nut 33
Straight Stubby (Polyethylene) 33
Tapered Plug (Polyethylene) 33

PVC Enclosures

Pages 36 - 38

Shown in Alphabetical Order

Electrical Enclosures 38
Electrical Trough Box
- Latch Cover 36
- Screw Cover 36

Large Fabricated Junction Boxes 37

Rigid PVC Conduit Fittings

Item	Size in Inches	Part Number	Reference Royal	Reference CANTEX	Reference Thomas & Betts - Carlon	Carton Qty
COUPLING						
	1/2″	E010050	REC10	6141623	E940D	200
	3/4″	E010075	REC15	6141624	E940E	125
	1″	E010100	REC20	6141625	E940F	70
	1 1/4″	E010125	REC25	6141626	E940G	40
	1 1/2″	E010150	REC30	6141627	E940H	30
	2″	E010200	REC35	6141628	E940J	40
	2 1/2″	E010250	REC40	6141629	E940K	20
	3″	E010300	REC45	6141630	E940L	40
	3 1/2″	E010350	REC50	6141631	E940M	30
	4″	E010400	REC55	6141632	E940N	20
	5″	E010500	REC60	6141633	E940P	10
	6″	E010600	REC65	6141634	E940R	8
	8″	E010800	-----	6141635D	-----	3
5° COUPLING						
	2″	E013200	R5EC35	6151457	E245J	20
	2 1/2″	E013250	R5EC40	-----	-----	12
	3″	E013300	R5EC45	6151458	-----	25
	3 1/2″	E013350	R5EC50	-----	-----	15
	4″	E013400	R5EC55	6151459	E245N	15
	5″	E013500	R5EC60	6151460	E245P	8
	6″	E013600	R5EC65	6151461	E245R	4
TERMINAL ADAPTER						
	1/2″	E011050	RTA10	5140103	E943D	200
	3/4″	E011075	RTA15	5140104	E943E	125
	1″	E011100	RTA20	5140105	E943F	70
	1 1/4″	E011125	RTA25	5140106	E943G	40
	1 1/2″	E011150	RTA30	5140107	E943H	30
	2″	E011200	RTA35	5140108	E943J	40
	2 1/2″	E011250	RTA40	5140109	E943K	20
	3″	E011300	RTA45	5140110	E943L	40
	3 1/2″	E011350	RTA50	5140111	E943M	30
	4″	E011400	RTA55	5140112	E943N	20
	5″	E011500	RTA60	5140113	E943P	10
	6″	E011600	RTA65	5140114	E943R	8

Rigid PVC Conduit Fittings

Item	Size in Inches	Part Number	Reference Royal	Reference CANTEX	Reference Thomas & Betts - Carlon	Carton Qty
FEMALE ADAPTER (NPT TAPERED THREAD)						
	1/2″	E012050	RFA10	5140043	E942D	200
	3/4″	E012075	RFA15	5140044	E942E	125
	1″	E012100	RFA20	5140045	E942F	70
	1 1/4″	E012125	RFA25	5140046	E942G	40
	1 1/2″	E012150	RFA30	5140047	E942H	30
	2″	E012200	RFA35	5140048	E942J	40
	2 1/2″	E012250	RFA40	5140049	E942K	20
	3″	E012300	RFA45	5140050	E942L	40
	3 1/2″	E012350	RFA50	5140051	E942M	30
	4″	E012400	RFA55	5140052	E942N	20
	5″	E012500	RFA60	5140053	E942P	10
	6″	E012600	RFA65	5140054	E942R	8
EXPANSIONS JOINT						
	1/2″	E016050	REJ10	5144031	E945D	25
	3/4″	E016075	REJ15	5144032	E945E	10
	1″	E016100	REJ20	5144033	E945F	10
	1 1/4″	E016125	REJ25	5144034	E945G	5
	1 1/2″	E016150	REJ30	5144035	E945H	5
	2″	E016200	REJ35	5144036	E945J	25
	2 1/2″	E016250	REJ40	5144037	E945K	12
	3″	E016300	REJ45	5144038	E945L	12
	3 1/2″	E016350	REJ50	5144039	E945M	6
	4″	E016400	REJ55	5144040	E945N	6
	5″	E016500	REJ60	5144041	E945P	1
	6″	E016600	REJ65	5144042	E945R	1
PIPE STRAP PVC - 2 HOLE						
	1/2″	E039050	RPS10	5133736	E977DC	300
	3/4″	E039075	RPS15	5133737	E977EC	200
	1″	E039100	RPS20	5133738	E977FC	200
	1 1/4″	E039125	RPS25	5133733	E977GC	200
	1 1/2″	E039150	RPS30	5133734	E977HC	200
	2″	E039200	RPS35	5133735	E977JC	200
METER OFFSET						
	1 1/4″	E024125	RMO25	5133183	E995G	15
	2″	E024200	RMO35	5133185	E995J	8

Rigid PVC Conduit Fittings

Item	Size in Inches	Part Number	Reference Royal	Reference CANTEX	Reference Thomas & Betts - Carlon	Carton Qty
SERVICE ENTRANCE FITTING						
	1/2″	E025050	REF10	5133590	-----	10
	3/4″	E025075	REF15	5133591	E998E CAR	10
	1″	E025100	REF20	5133741	E998F CAR	20
	1 1/4″	E025125	REF25	5133742	E998G CAR	20
	1 1/2″	E025150	REF30	5133695	E998H CAR	20
	2″	E025200	REF35	5133743	E998J	5
	2 1/2″	E025250	REF40	5133696	E998K UPC	5
	3″	E025300	REF45	5133697	E998L	5
	3 1/2″	E025350	REF50	5133698	-----	5
	4″	E025400	REF55	5133699	E998N	1
ACCESS FITTING - TYPE LB						
	1/2″	E033050	RSLB10S	5133663	E986D CAR	25
	3/4″	E033075	RSLB20S	5133664	E986E CAR	15
	1″	E033100	RSLB30S	5133665	E986F CAR	10
	1 1/4″	E033125	RSLB40S	5133666	E986G CAR	10
	1 1/2″	E033150	RSLB50S	5133667	E986H CAR	10
	2″	E033200	RSLB60S	5133668	E986J	5
	2 1/2″	E033250	RSLB70S	5133669	E986K	5
	3″	E033300	RSLB80S	5133670	E986L	5
	3 1/2″	E033350	RSLB90S	5133671	E986M	4
	4″	E033400	RSLB100S	5133672	E986N	4
ACCESS FITTING - TYPE C						
	1/2″	E032050	RSC10S	5133101	E987D CAR	25
	3/4″	E032075	RSC20S	5133102	E987E CAR	15
	1″	E032100	RSC30S	5133103	E987F CAR	10
	1 1/4″	E032125	RSC40S	5133104	E987G CAR	10
	1 1/2″	E032150	RSC50S	5133105	E987H CAR	10
	2″	E032200	RSC60S	5133106	E987J	5
	2 1/2″	E032250	RSC70S	5133108	-----	5
	3″	E032300	RSC80S	5133107	-----	5
	3 1/2″	E032350	RSC90S	5133110	-----	4
	4″	E032400	RSC100S	5133109	-----	4

Rigid PVC Conduit Fittings

Item	Size in Inches	Part Number	Reference Royal	Reference CANTEX	Reference Thomas & Betts - Carlon	Carton Qty
ACCESS FITTING - TYPE LL						
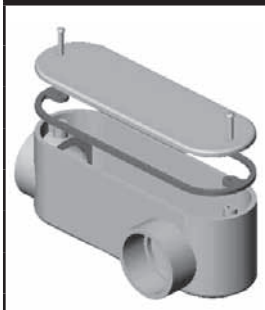	1/2″	E034050	RSLL10S	5133660	E984D CAR	25
	3/4″	E034075	RSLL20S	5133661	E984E CAR	15
	1″	E034100	RSLL30S	5133662	E984F CAR	10
	1 1/4″	E034125	RSLL40S	5133649	E984G CAR	10
	1 1/2″	E034150	RSLL50S	5133648	E984H CAR	10
	2″	E034200	RSLL60S	5133647	E984J	5
	2 1/2″	E034250	RSLL70S	5133644	------	5
	3″	E034300	RSLL80S	5133646	------	5
	3 1/2″	E034350	RSLL90S	5133640	------	4
	4″	E034400	RSLL100S	5133645	------	4
ACCESS FITTING - TYPE LR						
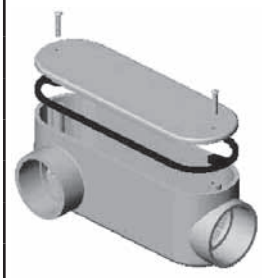	1/2″	E035050	RSLR10S	5133650	E985D CAR	25
	3/4″	E035075	RSLR20S	5133651	E985E CAR	15
	1″	E035100	RSLR30S	5133652	E985F CAR	10
	1 1/4″	E035125	RSLR40S	5133653	E985G CAR	10
	1 1/2″	E035150	RSLR50S	5133654	E985H CAR	10
	2″	E035200	RSLR60S	5133655	E985J	5
	2 1/2″	E035250	RSLR70S	5133658	------	5
	3″	E035300	RSLR80S	5133656	------	5
	3 1/2″	E035350	RSLR90S	5133659	------	4
	4″	E035400	RSLR100S	5133657	------	4
ACCESS FITTING - TYPE E						
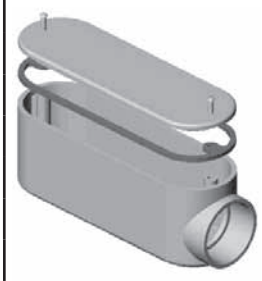	1/2″	E036050	RSE10S	5133151	E998D CAR	25
	3/4″	E036075	RSE20S	5133152	E998E	15
	1″	E036100	RSE30S	5133153	E988F CAR	10
	1 1/4″	E036125	RSE40S	5133154	E988G CAR	10
	1 1/2″	E036150	RSE50S	5133155	E988H CAR	10
	2″	E036200	RSE60S	5133156	E988J	5
	2 1/2″	E036250	RSE70S	5133157	------	5
	3″	E036300	RSE80S	5133158	------	5
	3 1/2″	E036350	RSE90S	5133160	------	4
	4″	E036400	RSE100S	5133159	------	4

Rigid PVC Conduit Fittings

Item	Size in Inches	Part Number	Reference Royal	Reference CANTEX	Reference Thomas & Betts - Carlon	Carton Qty
ACCESS FITTING - TYPE T						
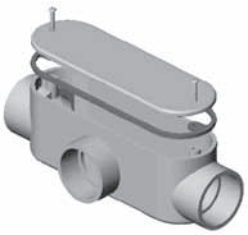	1/2″	E037050	RST10S	5133563	E983D CAR	25
	3/4″	E037075	RST20S	5133564	E983E CAR	15
	1″	E037100	RST30S	5133565	E983F	10
	1 1/4″	E037125	RST40S	5133566	E983G	10
	1 1/2″	E037150	RST50S	5133567	E983H CAR	10
	2″	E037200	RST60S	5133568	E983J	5
	2 1/2″	E037250	RST70S	5133569	-----	2
	3″	E037300	RST80S	5133570	-----	2
	3 1/2″	E037350	RST90S	5133572	-----	1
	4″	E037400	RST100S	5133571	-----	1
ACCESS FITTING - TYPE TB						
	1/2″	E069050	RSTB10S	-----	-----	30
	3/4″	E069075	RSTB20S	-----	-----	20
	1″	E069100	RSTB30S	-----	-----	10
	1 1/4″	E069125	RSTB40S	-----	-----	10
STRAIN RELIEF CONNECTOR						
	3/4″	E030075	RSRC15	-----	-----	25
THREADED STRAIN RELIEF CONNECTOR						
	1/2″	E031050	RTSRC10	5133430	-----	25
	3/4″	E031075	RTSRC15	5133431	-----	25

Rigid PVC Conduit Fittings

Item	Size in Inches	Part Number	Reference Royal	Reference CANTEX	Reference Thomas & Betts - Carlon	Carton Qty
PULL ELBOW						
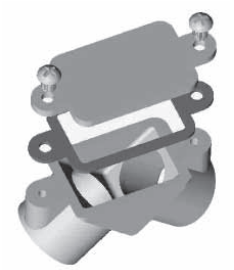	1/2″	E027050	RPE10	5240100	E990DR CAR	75
	3/4″	E027075	RPE15	5240101	E990ER CAR	50
SOLVENT WELD END CAP						
	1/2″	E026050	RCAP10	5140031	E958D	100
	3/4″	E026075	RCAP15	5140032	E958E	100
	1″	E026100	RCAP20	5140033	E958F	50
	1 1/4″	E026125	RCAP25	5140034	E958G	25
	1 1/2″	E026150	RCAP30	5140035	E958H	25
	2″	E026200	RCAP35	5140037	E958J	50
	2 1/2″	E026250	RCAP40	5140038	E958K	25
	3″	E026300	RCAP45	5140039	E958L	25
	4″	E026400	RCAP55	5140040	E958N	25
	5″	E026500	RCAP60	5140041	E958P	25
	6″	E026600	RCAP65	5140042	E958R	10
	8″	E026800	-----	-----	-----	6
THREADED REDUCER BUSHING						
	3/4″ X 1/2″	E0150705	R1825	-----	E9842D	200
	1″ X 1/2″	E0151005	R1826	-----	-----	200
	1″ X 3/4″	E0151007	R1827	-----	E9842E	200
BELL END (HUB X SPIGOT) - MOLDED						
	1/2″	E070050	REB10	5144003	-----	100
	3/4″	E070075	REB15	5144004	-----	100
	1″	E070100	REB20	5144005	E997F	50
	1 1/4″	E070125	REB25	5144006	E997G	50
	1 1/2″	E070150	REB30	5144007	E997H	50
	2″	E070200	REB35	5144008	E997J	40
	2 1/2″	E070250	REB40	5144009	E997K	30
	3″	E070300	REB45	5144010	E997L	50
	3 1/2″	E070350	REB50	5144011	E997M	50
	4″	E070400	REB55	5144012	E997N	50
	5″	E070500	REB60	5144013	E997P	25
	6″	E070600	REB65	5144014	E997R	15

Rigid PVC Conduit Fittings

Item	Size in Inches	Part Number	Reference Royal	Reference CANTEX	Reference Thomas & Betts - Carlon	Carton Qty
REDUCER BUSHING						
	3/4" X 1/2"	E0140705	R1805	5142220	E950ED	100
	1" X 1/2"	E0141005	R1805 1	-----	E950FD CAR	3 BAGS X 100
	1" X 3/4"	E0141007	R1806	5142221	E950FE	100
	1 1/4" X 3/4"	E0141207	R1807 1	-----	E950GE CAR	2 BAGS X 25
	1 1/4" X 1"	E0141210	R1807	5142222	E950GF	50
	1 1/2" X 1"	E0141510	R1808 1	-----	E950HF CAR	50
	1 1/2" X 1 1/4"	E0141512	R1808	514223	E950HG CAR	50
	2" X 1"	E0142010	R1809 1	-----	-----	50
	2" X 1 1/4"	E0142012	R1809	-----	E950JG CAR	25
	2" X 1 1/2"	E0142015	R1810	5142224	E950JH CAR	25
	2 1/2" X 2"	E0142520	R1811	5142225	E950KJ CAR	25
	3" X 2"	E0143020	R1812 1	-----	E950LJ CAR	25
	3" X 2 1/2"	E0143025	R1812	5142226	E950LK	25
	4" X 2"	E0144020	R1813 1	-----	-----	15
	4" X 3"	E0144030	R1813	5142227	E950NL	20
	4" 3 1/2"	E0144035	R1814	5142229	-----	20
SINGLE GANG COVER PLATE - F SERIES						
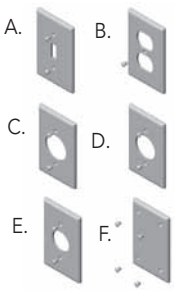	A. TOGGLE	E046002	RTSC15/10	-----	-----	100
	B. DUPLEX	E046001	RDRC15/10	-----	-----	100
	C. 15 AMP	E046004	R20RC15/10	-----	-----	100
	D. 20 AMP	E046003	R20 3RC15/10	-----	-----	100
	E. 30 AMP	E046005	R30 3RC15/10	-----	-----	100
	F. BLANK W/ GASKET	E046006	RBRC15/10	5133362	E980CN CAR	50

Rigid PVC Conduit Fittings

Item	Size in Inches	Part Number	Reference Royal	Reference CANTEX	Reference Thomas & Betts - Carlon	Carton Qty
SINGLE GANG WEATHERPROOF COVER PLATE						
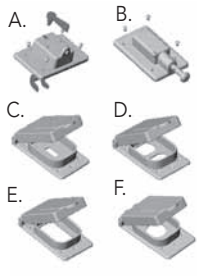	A. TOGGLE S/ COVER	E047002	RVSC15/10	5133330	E98TSCN CAR	10
	B. PLUNGER S/ COVER	E047008	RVPT15/10	5133335	------	10
	C. TOGGLE	E047009	RWTG15/10	5133361	E98SSNCN CAR	10
	D. DUPLEX	E047001	RWDR15/10	5133352	E98GDRN CAR	10
	D. DUPLEX WHITE	E047010	RWDR15/10W	------	------	20
	E. GROUND FAULT	E047007	RWGF15/10	5133348	E98GFCN CAR	10
	E. GROUND FAULT WHITE	E047011	RWGF15/10W	------	------	20
	F. 15 AMP	E047003	RWTL15	5133350	E98SRCN CAR	10
	F. 20 AMP	E047004	RWTL20	5133320	E98G20N	10
	F. 30 AMP	E047005	RWTL30	5133321	E98G30N CAR	10
	F. 50 AMP	E047006	RWTL50	5133322	E98G5FN CAR	10
DOUBLE GANG WEATHERPROOF COVER PLATE						
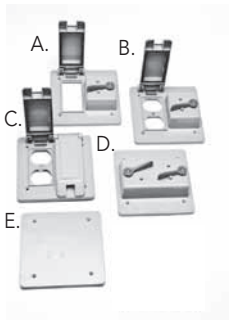	B. GFI & TOGGLE	E049005	------	5133345	E9G2GTN CAR	10
	C. DUPLEX & TOGGLE	E049006	------	5133337	E9GDSN CAR	10
	D. DOUBLE DU PLEX	E049007	------	5133347	E9GDDN CAR	10
	E. TOGGLE	E049008	------	5133331	E9G2SSN	10
	F. BLANK	E049009		5133410	E9802CN CAR	25
SINGLE GANG BOX - F SERIES						
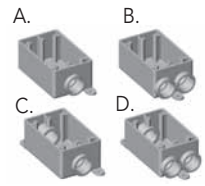	A. 1/2" FS	E042001	RFS10	5133363	E980DFN	10
	A. 3/4" FS	E042002	RFS15	5133364	E980EFN	10
	B. 1/2" FSS	E042003	RFSS10	5133540	E982DFN	10
	B. 3/4" FSS	E042004	RFSS15	5133542	E982EFN	10
	C. 1/2" FSC	E042005	RFSC10	5133463	E981DFN	10
	C. 3/4" FSC	E042006	RFSC15	5133464	E981EFN	10
	D. 1/2" FSCC	E042007	RFSCC10	5133544	E979DFN CAR	10
	D. 3/4" FSCC	E042008	RFSCC15	5133545	E979ERN CAR	10
SINGLE GANG DEEP BOX - FD SERIES						
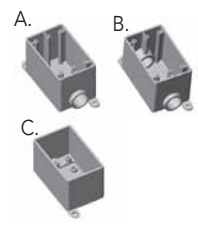	A. 1/2" FDS	E043001	RFDS10	5133300	E9801DN	10
	A. 3/4" FDS	E043002	RFDS15	5133301	E9801EN	10
	A. 1" FDS	E043003	RFDS20	5133302	E9801FN	10
	B. 1/2" FDC	E043004	RFDC10	5133310	E9811DN	10
	B. 3/4" FDC	E043005	RFDC15	5133311	E9811EN	10
	B. 1" FDC	E043006	RFDC20	5133312	E9811FN	10
	C. BLANK	E043007	RFD	5133420	E9801	10

Rigid PVC Conduit Fittings

Item	Size in Inches	Part Number	Reference Royal	Reference CANTEX	Reference Thomas & Betts - Carlon	Carton Qty
DOUBLE GANG BOX - F SERIES						
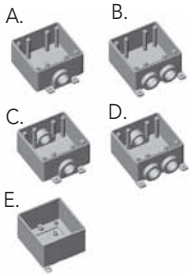	A. 1/2" FS	E041001	-----	5133380	E9802D	5
	A. 3/4" FS	E041002	-----	5133381	E9802E	5
	A. 1" FS	E041003	-----	5133382	E9802F	5
	B. 1/2" FSS	E041004	-----	5133390	-----	5
	B. 3/4" FSS	E041005	-----	5133391	-----	5
	B. 1" FSS	E041006	-----	5133392	-----	5
	C. 1/2" FSC	E041007	-----	5133370	E9812D	5
	C. 3/4" FSC	E041008	-----	5133371	E9812E	5
	C. 1" FSC	E041009	-----	5133372	E9812F	5
	D. 1/2" FSCC	E041011	-----	5133400	-----	5
	D. 3/4" FSCC	E041012	-----	5133401	-----	5
	D. 1" FSCC	E041013	-----	5133402	-----	5
	E. BLANK	E041010	-----	-----	E9802	5
OCTAGONAL BOX						
	4" X 1 1/2" (3/4" X1/2")	E028150	ROB15/10	-----	-----	20
	4" X 2" (1")	E028200	ROB20	-----	-----	12
KO PLUG						
	3/4"	E067075	RKO15	-----	-----	1
	1"	E067100	RTKO20	-----	-----	1
OCTAGONAL BOX EXTENSION RING						
	1"	E029100	RXR20	-----	-----	20
	2"	E029200	RXR35	-----	-----	20

Rigid PVC Conduit Fittings

Item	Size in Inches	Part Number	Reference Royal	Reference CANTEX	Reference Thomas & Betts - Carlon	Carton Qty
DUPLEX FLOOR BOX/ LEVEL RING/ POUR COVER/ REDUCER BUSHING						
	4 - 3/4"	E068004	RFDB4	5133760	E971FB	9
	2 - 1", 2 - 3/4"	E068001	RFDB2	5133758	E971FB	9
DUPLEX FLOOR BOX COVER						
	POLY BRONZE COVER	E068003	RFDBC	5133678		10
JUNCTION BOX WITH GASKET						
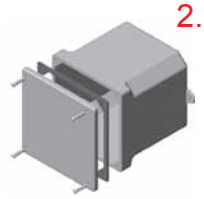	4" X 4" X 2"	E051442	RJB442	5133705	E989NNJ CAR	10
	4" X 4" X 4"	E051444	RJB444	5133709	E987N CAR	10
	4" X 4" X 6"	E051446	RJB446	5133707	E989NNR CAR	10
	5" X 5" X 2"	E051552	RJB552	5133706	E989PPJ CAR	10
	6" X 6" X 4"	E051664	RJB664	5133710	E987R CAR	10
	6" X 6" X 6"	E051666	RJB666	5133711	E989RRR UPC	5
	8" X 8" X 4"	E051884	RJB884	5133712	E989N CAR	5
	8" X 8" X 7"	E051887	RJB887	5133708	E989SSX UPC	4
	12" X 12" X 4"	E05112124	RJB12124	5133714	E989UUN	2
	12" X 12" X 6"	E05112126	RJB12126	5133713	E989R UPC	2
	12" X 12" X 8"	E05112128	RJB12128			3
JUNCTION BOX ADAPTERS						
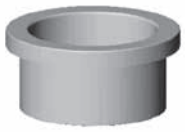	1/2"	E059050	RJBA10	5133715	E996D	100
	3/4"	E059075	RJBA15	5133716	E996E	100
	1"	E059100	RJBA20	5133717	E996F	100
	1 1/4"	E059125	RJBA25	5133718	E996G	50
	1 1/2"	E059150	RJBA30	5133719	E996H	50
	2"	E059200	RJBA35	5133720	E996J	25
	2 1/2"	E059250	RJBA40	5133721	E996K CAR	10
	3"	E059300	RJBA45	5133722	E996L	10
	3 1/2"	E059350	RJBA50	5133723		10
	4"	E059400	RJBA55	5133724	E996N	10

Rigid PVC Conduit Fittings

Item	Size in Inches	Part Number	Reference Royal	Reference CANTEX	Reference Thomas & Betts - Carlon	Carton Qty
METER RISER KIT						
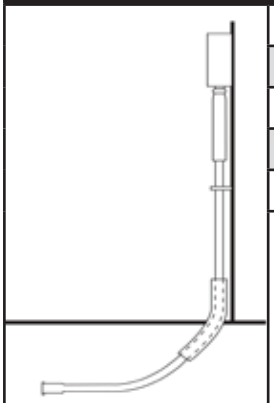	1 1/4″	E092125	-----	-----	-----	1
	1 1/2″	E092150	-----	-----	-----	1
	2″	E092200	-----	-----	-----	1
	2 1/2″	E092250	-----	-----	-----	1
	3″	E092300	-----	-----	-----	1
SLIP METER RISER						
	2″	E093200	-----	5144028	E954JXX	20
	2 1/2″	E093250	-----	5144030	E954KXX	15
	3″	E093300	-----	5144043	E954LXX	10
	4″	E093400	-----	5144027	E954NXX	5
DUCT - INTERMEDIATE VERTICAL LOCK SPACER						
	2 X 1 1/2″	IS2015	IS2015	-----	-----	350
	2 X 2″	IS2020	IS2020	-----	-----	300
	2 X 3″	IS2030	IS2030	-----	-----	200
	3 X 1 1/2″	IS3015	IS3015	-----	-----	225
	3 X 2″	IS3020	IS3020	-----	-----	200
	3 X 3″	IS3030	IS3030	-----	-----	125
	4 X 1 ″	IS4010	IS4010	-----	-----	200
	4 X 1 1/2″	IS4015	IS4015	-----	-----	150
	4 X 2″	IS4020	IS4020	-----	-----	125
	4 X 3″	IS4030	IS4030	-----	-----	90
	5 X 1 1/2″	IS5015	IS5015	-----	-----	100
	5 X 2″	IS5020	IS5020	-----	-----	100
	5 X 3″	IS5030	IS5030	-----	-----	80
	6 X 1 1/2″	IS6015	IS6015	-----	-----	100
	6 X 2″	IS6020	IS6020	-----	-----	90
	6 X 3″	IS6030	IS6030	-----	-----	70
	8 X 1 1/2″	IS8015	-----	-----	-----	60
	8 X 2″	IS8020	-----	-----	-----	60

Rigid PVC Conduit Fittings

Item	Size in Inches	Part Number	Reference Royal	Reference CANTEX	Reference Thomas & Betts - Carlon	Carton Qty
DUCT - BASE VERTICAL LOCK SPACER						
	2 X 1 1/2"	BS2015	BS2015	-----	-----	250
	2 X 2"	BS2020	BS2020	-----	-----	225
	2 X 3"	BS2030	BS2030	-----	-----	225
	3 X 1 1/2"	BS3015	BS3015	-----	-----	175
	3 X 2"	BS3020	BS3020	-----	-----	155
	3 X 3"	BS3030	BS3030	-----	-----	150
	4 X 1 "	BS4010	BS4010	-----	-----	175
	4 X 1 1/2"	BS4015	BS4015	-----	-----	140
	4 X 2"	BS4020	BS4020	-----	-----	140
	4 X 3"	BS4030	BS4030	-----	-----	120
	5 X 1 1/2"	BS5015	BS5015	-----	-----	120
	5 X 2"	BS5020	BS5020	-----	-----	120
	5 X 3"	BS5030	BS5030	-----	-----	100
	6 X 1 1/2"	BS6015	BS6015	-----	-----	100
	6 X 2"	BS6020	BS6020	-----	-----	100
	6 X 3"	BS6030	BS6030	-----	-----	95
	8 X 1 1/2"	BS8015	-----	-----	-----	50
	8 X 2"	BS8020	-----	-----	-----	50
UNIVERSAL PLUG W/PULLING EYE						
	2"	E091200	PLUG02	5315258	P258JT	70
	3"	E091300	PLUG03	5315260	P258LT	45
	4"	E091400	PLUG04	5315262	P258NT	80
	5"	E091500	PLUG05	5315263	P258PT	45
	6"	E091600	PLUG06	5315264	P258RT	35
ECOVOC LOW VOC / CLEAR CEMENT						
	PINT	RVOC475	RVOC475	7210612	VC9963	12
	QUART	RVOC950ML	RVOC950ML	7210613	VC9962	12

Rigid PVC Conduit Fittings

Item	Size in Inches	Part Number	Reference Royal	Reference CANTEX	Reference Thomas & Betts - Carlon	Carton Qty
VINYL SIDING ELECTRICAL MOUNT						
	7 1/2" X 7 1/2"	10000	-----	-----	-----	10
	7 5/8" X 12"	41000	-----	-----	-----	10
	7 1/2" X 7 3/4"	13000	-----	-----	-----	10
	6" X 4 1/2"	43000	-----	-----	-----	10
	5 1/2" X 7 6/16"	44000	-----	-----	-----	10
	14 1/2" X 19"	42000	-----	-----	-----	1
	7" X 7"	17000	-----	-----	-----	10
SCH 40 STANDARD ELBOWS - 90° ELBOW - PLAIN END						
	1/2"	E018050	REE1090PE	5133823	UA9AD	50
	3/4"	E018075	REE1590PE	5133824	UA9AE	35
	1"	E018100	REE2090PE	5133825	UA9AF	20
	1 1/4"	E018125	REE2590PE	5133826	UA9AG	30
	1 1/2"	E018150	REE3090PE	5133827	UA9AH	30
	2"	E018200	REE3590PE	5133828	UA9AJ	15
	2 1/2"	E018250	REE4090PE	5133829	UA9AK CAR	18
	3"	E018300	REE4590PE	5133830	UA9AL	14
	3 1/2"	E018350	REE5090PE	5133831	UA9AM	12
	4"	E018400	REE5590PE	5133832	UA9AN	10
	5"	E018500	REE6090PE	5133835	UA9AP	1
	6"	E018600	REE6590PE	5133834	UA9AR	1
SCH 40 STANDARD ELBOWS - 45° ELBOW - PLAIN END						
	1/2"	E019050	REE1045PE	5133763	UA7AD	50
	3/4"	E019075	REE1545PE	5133764	UA7AE	25
	1"	E019100	REE2045PE	5133765	UA7AF	20
	1 1/4"	E019125	REE2545PE	5133766	UA7AG	25
	1 1/2"	E019150	REE3045PE	5133767	UA7AH	20
	2"	E019200	REE3545PE	5133768	UA7AJ	10
	2 1/2"	E019250	REE4045PE	5133769	UA7AK	20
	3"	E019300	REE4545PE	5133770	UA7AL CAR	8
	3 1/2"	E019350	REE5045PE	5133771	UA7AM	5
	4"	E019400	REE5545PE	5133772	UA7AN	20
	5"	E019500	REE6045PE	5133773	UA7AP	1
	6"	E019600	REE6545PE	5133774	UA7AR	1

Rigid PVC Conduit Fittings

Item	Size in Inches	Part Number	Reference Royal	Reference CANTEX	Reference Thomas & Betts - Carlon	Carton Qty
SCH 40 STANDARD ELBOWS - 30° ELBOW - PLAIN END						
	1/2″	E020050	REE1030PE	5133755	UA6AD	50
	3/4″	E020075	REE1530PE	5133744	UA6AE	25
	1″	E020100	REE2030PE	5133745	UA6AF	20
	1 1/4″	E020125	REE2530PE	5133746	UA6AG	25
	1 1/2″	E020150	REE3030PE	5133747	UA6AH	50
	2″	E020200	REE3530PE	5133748	UA6AJ	10
	2 1/2″	E020250	REE4030PE	5133749	UA6AK	20
	3″	E020300	REE4530PE	5133750	UA6AL	8
	3 1/2″	E020350	REE5030PE	5133751	UA6AM	5
	4″	E020400	REE5530PE	5133775	UA6AN	20
	5″	E020500	REE6030PE	5133753	UA6AP	1
	6″	E020600	REE6530PE	5133754	UA6AR	1
SCH 40 STANDARD ELBOWS - 22 1/2° ELBOW - PLAIN END						
	1 1/2″	E084150	-----	5134094	UA5AH	20
	2″	E084200	-----	5134067	UA5AJ	10
	2 1/2″	E084250	-----	5134096	UA5AK	20
	3″	E084300	-----	5134068	UA5AL	8
	3 1/2″	E084350	-----	5134095	UA5AM	5
	4″	E084400	-----	5133757	UA5AN	20
	5″	E084500	-----	5134037	UA5AP	1
	6″	E084600	-----	5133901	UA5AR	1
SCH 40 STANDARD ELBOWS - 11 1/4° ELBOW - PLAIN END						
	2″	E087200	-----	-----	UA3AJ	1
	3″	E087300	-----	-----	UA3AL	1
	4″	E087400	-----	-----	UA3AN	1
	5″	E087500	-----	-----	UA3AP	1

Rigid PVC Conduit Fittings

Item	Size in Inches	Part Number	Reference Royal	Reference CANTEX	Reference Thomas & Betts - Carlon	Carton Qty
SCH 40 STANDARD ELBOWS - 90° ELBOW - BELL END						
	1/2″	E021050	REE1090	5233823	UA9ADB	50
	3/4″	E021075	REE1590	5233824	UA9AEB	35
	1″	E021100	REE2090	5233825	UA9AFB	20
	1 1/4″	E021125	REE2590	5233826	UA9AGB	30
	1 1/2″	E021150	REE3090	5233827	UA9AHB	30
	2″	E021200	REE3590	5233828	UA9AJB	15
	2 1/2″	E021250	REE4090	5233829	UA9AKB CAR	18
	3″	E021300	REE4590	5233830	UA9ALB CAR	14
	3 1/2″	E021350	REE5090	5233831	UA9AMB	12
	4″	E021400	REE5590	5233832	UA9ANB	10
	5″	E021500	REE6090	5233835	UA9APB	1
	6″	E021600	REE6590	5233834	UA9ARB	1
SCH 40 STANDARD ELBOWS - 45° ELBOW - BELL EN						
	1/2″	E022050	REE1045	5233763	UA7ADB	50
	3/4″	E022075	REE1545	5233764	UA7AEB	25
	1″	E022100	REE2045	5233765	UA7AFB	20
	1 1/4″	E022125	REE2545	5233766	UA7AGB	25
	1 1/2″	E022150	REE3045	5233767	UA7AHB	20
	2″	E022200	REE3545	5233768	UA7AJB	10
	2 1/2″	E022250	REE4045	5233769	UA7AKB	20
	3″	E022300	REE4545	5233770	UA7ALB	8
	3 1/2″	E022350	REE5045	5233771	UA7AMB	5
	4″	E022400	REE5545	5233772	UA7ANB	20
	5″	E022500	REE6045	5233773	UA7APB	1
	6″	E022600	REE6545	5233774	UA7ARB	1
SCH 40 STANDARD ELBOWS - 30° ELBOW - BELL END						
	1/2″	E072050	REE1030		UA6ADB	50
	3/4″	E072075	REE1530		UA6AEB	35
	1″	E072100	REE2030		UA6AFB	50
	1 1/4″	E072125	REE2530		UA6AGB	30
	1 1/2″	E072150	REE3030		UA6AHB	50
	2″	E072200	REE3530	5233748	UA6AJB	10
	2 1/2″	E072250	REE4030		UA6AKB	10
	3″	E072300	REE4530	5233750	UA6ALB	8
	3 1/2″	E072350	REE5030	5233751	UA6AMB	5
	4″	E072400	REE5530	5233776	UA6ANB	20
	5″	E072500	REE6030	5233753	UA6APB	1
	6″	E072600	REE6530	5233754	UA6ARB	1

Rigid PVC Conduit Fittings

Item	Size in Inches	Part Number	Reference Royal	Reference CANTEX	Reference Thomas & Betts - Carlon	Carton Qty
SCH 80 STANDARD ELBOWS - SCH80 90° ELBOW - PLAIN END						
	1/2″	E085050	-----	5121053	UB9AD	50
	3/4″	E085075	-----	5121054	UB9AE	35
	1″	E085100	-----	5121055	UB9AF	20
	1 1/4″	E085125	-----	5121056	UB9AG	30
	1 1/2″	E085150	-----	5121057	UB9AH	30
	2″	E085200	-----	5121058	UB9AJ	15
	2 1/2″	E085250	-----	5121059	UB9AK CAR	18
	3″	E085300	-----	5121060	UB9AL CAR	14
	4″	E085400	-----	5121061	UB9AN	10
	5″	E085500	-----	5121062	UB9AP	1
	6″	E085600	-----	5121063	UB9AR	1
SCH 80 STANDARD ELBOWS - SCH80 45° ELBOW - PLAIN END						
	1/2″	E086050	-----	5121003	UB7AD	50
	3/4″	E086075	-----	5121004	UB7AE UPC	25
	1″	E086100	-----	5121005	UB7AF UPC	20
	1 1/4″	E086125	-----	5121006	UB7AG	25
	1 1/2″	E086150	-----	5121007	UB7AH	20
	2″	E086200	-----	5121008	UB7AJ UPC	10
	2 1/2″	E086250	-----	5121009	UB7AK	20
	3″	E086300	-----	5121010	UB7AL	8
	4″	E086400	-----	5121011	UB7AN	20
	5″	E086500	-----	5121012	UB7AP	1
	6″	E086600	-----	5121013	UB7AR	1
SCH. 40 SPECIAL RADIUS ELBOW PLAIN END - 90° 24″ RADIUS						
	1″	E07510024	-----	5133859	UA9DF	1
	1 1/4″	E07512524	-----	5133883	UA9DG	1
	1 1/2″	E07515024	-----	5133873	UA9DH	1
	2″	E07520024	-----	5133836	UA9DJ	1
	2 1/2″	E07525024	-----	5133847	UA9DK	1
	3″	E07530024	-----	5133837	UA9DL	1
	3 1/2″	E07535024	-----	5133893	UA9DM	1
	4″	E07540024	-----	5133822	UA9DN	1
	5″	E07550024	-----	-----	-----	1
	6″	E07560024	-----	-----	-----	1

Rigid PVC Conduit Fittings

Item	Size in Inches	Part Number	Reference Royal	Reference CANTEX	Reference Thomas & Betts - Carlon	Carton Qty
SCH. 40 SPECIAL RADIUS ELBOW PLAIN END - 90° 36" RADIUS						
	1"	E07510036	-----	5133852	UA9FF	1
	1 1/4"	E07512536	-----	5133884	UA9FG	1
	1 1/2"	E07515036	-----	5133866	UA9FH	1
	2"	E07520036	-----	5133848	UA9FJ UPC	1
	2 1/2"	E07525036	-----	5133857	UA9FK UPC	1
	3"	E07530036	-----	5133820	UA9FL	1
	3 1/2"	E07535036	-----	5133818	UA9FM	1
	4"	E07540036	-----	5133821	UA9FN	1
	5"	E07550036	-----	5133841	UA9FP	1
	6"	E07560036	-----	5133877	UA9FR	1
SCH. 40 SPECIAL RADIUS ELBOW PLAIN END - 90° 48" RADIUS						
	1"	E07510048	-----	5133864	UA9HF	1
	1 1/4"	E07512548	-----	5133871	UA9HG	1
	1 1/2"	E07515048	-----	5133865	UA9HH	1
	2"	E07520048	-----	5133876	UA9HJ	1
	2 1/2"	E07525048	-----	5133849	UA9HK	1
	3"	E07530048	-----	5133817	UA9HL	1
	3 1/2"	E07535048	-----	5133892	UA9HM	1
	4"	E07540048	-----	5133843	UA9HN	1
	5"	E07550048	-----	5133842	UA9HP	1
	6"	E07560048	-----	5133816	UA9HR	1
SCH. 40 SPECIAL RADIUS ELBOW PLAIN END - 45° 24" RADIUS						
	1"	E07610024	-----	5133875	UA7DF	1
	1 1/4"	E07612524	-----	5133941	UA7DG	1
	1 1/2"	E07615024	-----	5133874	UA7DH	1
	2"	E07620024	-----	5133815	UA7DJ	1
	2 1/2"	E07625024	-----	5133935	UA7DK	1
	3"	E07630024	-----	5133800	UA7DL	1
	3 1/2"	E07635024	-----	5133802	UA7DM	1
	4"	E07640024	-----	5133812	UA7DN	1
	5"	E07650024	-----	-----	-----	1
	6"	E07660024	-----	-----	-----	1

Rigid PVC Conduit Fittings

Item	Size in Inches	Part Number	Reference Royal	Reference CANTEX	Reference Thomas & Betts - Carlon	Carton Qty
SCH. 40 SPECIAL RADIUS ELBOW PLAIN END - 45° 36" RADIUS						
	1"	E07610036	------	5133919	UA7FF	1
	1 1/4"	E07612536	------	5133956	UA7FG	1
	1 1/2"	E07615036	------	5133810	UA7FH	1
	2"	E07620036	------	5133778	UA7FJ	1
	2 1/2"	E07625036	------	5133801	UA7FK	1
	3"	E07630036	------	5133779	UA7FL	1
	3 1/2"	E07635036	------	5133939	UA7FM	1
	4"	E07640036	------	5133777	UA7FN	1
	5"	E07650036	------	5133780	UA7FP	1
	6"	E07660036	------	5133880	UA7FR	1
SCH. 40 SPECIAL RADIUS ELBOW PLAIN END - 45° 48" RADIUS						
	1"	E07610048	------	5133940	UA7HF	1
	1 1/4"	E07612548	------	5133942	UA7HG	1
	1 1/2"	E07615048	------	5133811	UA7HH	1
	2"	E07620048	------	5133798	UA7HJ	1
	2 1/2"	E07625048	------	5134010	UA7HK	1
	3"	E07630048	------	5133781	------	1
	3 1/2"	E07635048	------	5133979	------	1
	4"	E07640048	------	5133776	UA7HN	1
	5"	E07650048	------	5133814	UA7HP	1
	6"	E07660048	------	5133813	UA7HR	1
SCH. 40 SPECIAL RADIUS ELBOW BELLED - 90° 24" RADIUS						
	2"	E07920024	------	5133924	UA9DJB UPC	1
	2 1/2"	E07925024	------	5233847	UA9DKB UPC	1
	3"	E07930024	------	5233837	UA9DLB UPC	1
	3 1/2"	E07935024	------	5233893	UA9DMB	1
	4"	E07940024	------	5233822	UA9DNB	1
SCH. 40 SPECIAL RADIUS ELBOW BELLED - 90° 36" RADIUS						
	2"	E07920036	------	5233848	UA9FJB	1
	2 1/2"	E07925036	------	5233857	UA9FKB	1
	3"	E07930036	------	5233930	UA9FLB	1
	3 1/2"	E07935036	------	5233818	UA9FMB	1
	4"	E07940036	------	5233842	UA9FNB	1
	5"	E07950036	------	5233841	UA9FPB	1
	6"	E07960036	------	5233877	UA9FRB	1

Rigid PVC Conduit Fittings

Item	Size in Inches	Part Number	Reference Royal	Reference CANTEX	Reference Thomas & Betts - Carlon	Carton Qty
SCH. 40 SPECIAL RADIUS ELBOW BELLED - 90° 48" RADIUS						
	2"	E07920048	-----	5233876	UA9HJB	1
	2 1/2"	E07925048	-----	5233849	UA9HKB	1
	3"	E07930048	-----	5233817	UA9HLB	1
	3 1/2"	E07935048	-----	5233892	-----	1
	4"	E07940048	-----	5233843	UA9HNB	1
	5"	E07950048	-----	5233868	UA9HPB	1
	6"	E07960048	-----	5233816	UA9HRB	1
SCH. 40 SPECIAL RADIUS ELBOW BELLED - 45° 24" RADIUS						
	2"	E08020024	-----	5233815	UA7DJB	1
	2 1/2"	E08025024	-----	5233935	UA7DKB	1
	3"	E08030024	-----	5233800	UA7DLB	1
	3 1/2"	E08035024	-----	5233802	-----	1
	4"	E08040024	-----	5233812	UA7DNB	1
SCH. 40 SPECIAL RADIUS ELBOW BELLED - 45° 36" RADIUS						
	2"	E08020036	-----	5233778	UA7FJB	1
	2 1/2"	E08025036	-----	5233801	UA7FKB	1
	3"	E08030036	-----	5233779	UA7FLB	1
	3 1/2"	E08035036	-----	5233939	-----	1
	4"	E08040036	-----	5233777	UA7FNB	1
	5"	E08050036	-----	5233780	UA7FPB	1
	6"	E08060036	-----	5133894	UA7FRB	1
SCH. 40 SPECIAL RADIUS ELBOW BELLED - 45° 48" RADIUS						
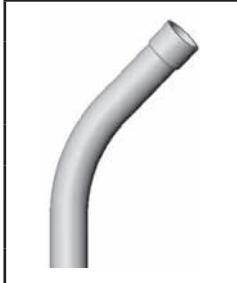	2"	E08020048	-----	5133759	UA7HJB	1
	2 1/2"	E08025048	-----	5233785	-----	1
	3"	E08030048	-----	5233782	UA7HLB	1
	3 1/2"	E08035048	-----	5233943	-----	1
	4"	E08040048	-----	5133761	UA7HNB	1
	5"	E08050048	-----	5233781	UA7HPB	1
	6"	E08060048	-----	5233813	UA7HRB	1
SCH. 80 SPECIAL RADIUS ELBOW PLAIN END - 90° 24" RADIUS						
	1"	E07710024	-----	5121018	UB9DF	1
	1 1/4"	E07712524	-----	5119824	UB9DG	1
	1 1/2"	E07715024	-----	5121015	UB0DH UPC	1
	2"	E07720024	-----	5121019	UB9DJ UPC	1
	2 1/2"	E07725024	-----	5121028	UB9DK UPC	1
	3"	E07730024	-----	5121020	UB9DL	1
	4"	E07740024	-----	5121022	UB9DN	1

Rigid PVC Conduit Fittings

Item	Size in Inches	Part Number	Reference Royal	Reference CANTEX	Reference Thomas & Betts - Carlon	Carton Qty
SCH. 80 SPECIAL RADIUS ELBOW PLAIN END - 90° 36" RADIUS						
	1"	E07710036		5121080	UB9FF	1
	1 1/4"	E07712536		5121084	UB9FG	1
	1 1/2"	E07715036		5121100	UB9FH	1
	2"	E07720036		5121021	UB9FJ	1
	2 1/2"	E07725036		5121016	UB9FK	1
	3"	E07730036		5121081	UB9FL	1
	4"	E07740036		5121023	UB9FN	1
	5"	E07750036		5121083	UB9FP	1
	6"	E07760036		5121073	UB9FR	1
SCH. 80 SPECIAL RADIUS ELBOW PLAIN END - 90° 48" RADIUS						
	1"	E07710048		5121065	UB9HF	1
	1 1/4"	E07712548		5136510	UB9HG	1
	1 1/2"	E07715048		5121076	UB9HH	1
	2"	E07720048		5121075	UB9HJ	1
	2 1/2"	E07725048		5121030	UB9HK	1
	3"	E07730048		5121082	UB9HL	1
	4"	E07740048		5121024	UB9HN	1
	5"	E07750048		5121025	UB9HP	1
SCH. 80 SPECIAL RADIUS ELBOW PLAIN END						
	1"	E07810024		5136500	UB7DF	1
	1 1/4"	E07812524		5136512	UB7DG	1
	1 1/2"	E07815024		5163533	UB7DH	1
	2"	E07820024		5121101	UB7DJ	1
	2 1/2"	E07825024		5121943	UB7DK	1
	3"	E07830024		5121014	UB7DL	1
	4"	E07840024		5121089	UB7DN	1
SCH. 80 SPECIAL RADIUS ELBOW PLAIN END						
	1"	E07810036		5136502		1
	1 1/4"	E07812536		5136514	UB7FG	1
	1 1/2"	E07815036		5136533	UB7FH	1
	2"	E07820036		5121098	UB7FJ	1
	2 1/2"	E07825036		5121150	UB7FK	1
	3"	E07830036		5121077	UB7FL	1
	4"	E07840036		5119821	UB7FN	1
	5"	E07850036		5119820	UB7FP	1
	6"	E07860036		5121072	UB7FR	1

Rigid PVC Conduit Fittings

Item	Size in Inches	Part Number	Reference Royal	Reference CANTEX	Reference Thomas & Betts - Carlon	Carton Qty
SCH. 80 SPECIAL RADIUS ELBOW PLAIN END - 45° 48" RADIUS						
	1"	E07810048	-----	5136503	UB7HF	1
	1 1/4"	E07812548	-----	5136515	UB7HG	1
	1 1/2"	E07815048	-----	5136534	-----	1
	2"	E07820048	-----	5121093	UB7HJ	1
	2 1/2"	E07825048	-----	5136563	-----	1
	3"	E07830048	-----	5121078	UB7HL	1
	4"	E07840048	-----	5121091	UB7HN	1
	5"	E07850048	-----	5121948	UB7HP	1
SCH. 80 SPECIAL RADIUS ELBOW BELLED - 90° 24" RADIUS						
	1"	E08210024	-----	-----	-----	1
	1 1/4"	E08212524	-----	-----	-----	1
	1 1/2"	E08215024	-----	-----	-----	1
	2"	E08220024	-----	-----	UB9DJB	1
	2 1/2"	E08225024	-----	-----	UB9DKB	1
	3"	E08230024	-----	-----	UB9DLB	1
	4"	E08240024	-----	-----	-----	1
SCH. 80 SPECIAL RADIUS ELBOW BELLED - 90° 36" RADIUS						
	1"	E08210036	-----	-----	-----	1
	1 1/4"	E08212536	-----	-----	-----	1
	1 1/2"	E08215036	-----	-----	-----	1
	2"	E08220036	-----	-----	-----	1
	2 1/2"	E08225036	-----	-----	UB9FKB	1
	3"	E08230036	-----	-----	UB9FLB	1
	4"	E08240036	-----	-----	UB9FNB	1
	5"	E08250036	-----	-----	-----	1
	6"	E08260036	-----	-----	-----	1
SCH. 80 SPECIAL RADIUS ELBOW BELLED - 90° 48" RADIUS						
	1"	E08210048	-----	-----	-----	1
	1 1/4"	E08212548	-----	-----	-----	1
	1 1/2"	E08215048	-----	-----	-----	1
	2"	E08220048	-----	-----	-----	1
	2 1/2"	E08225048	-----	-----	-----	1
	3"	E08230048	-----	-----	-----	1
	4"	E08240048	-----	-----	UB9HNB	1
	5"	E08250048	-----	-----	-----	1

Rigid PVC Conduit Fittings

Item	Size in Inches	Part Number	Reference Royal	Reference CANTEX	Reference Thomas & Betts - Carlon	Carton Qty
SCH. 80 SPECIAL RADIUS ELBOW BELLED - 45° 24" RADIUS						
	1"	E08310024	-----	-----	-----	1
	1 1/4"	E08312524	-----	-----	-----	1
	1 1/2"	E08315024	-----	-----	-----	1
	2"	E08320024	-----	-----	-----	1
	2 1/2"	E08325024	-----	-----	-----	1
	3"	E08330024	-----	-----	-----	1
	4"	E08340024	-----	-----	-----	1
SCH. 80 SPECIAL RADIUS ELBOW BELLED - 45° 36" RADIUS						
	1"	E08310036	-----	-----	-----	1
	1 1/4"	E08312536	-----	-----	-----	1
	1 1/2"	E08315036	-----	-----	-----	1
	2"	E08320036	-----	-----	-----	1
	2 1/2"	E08325036	-----	-----	-----	1
	3"	E08330036	-----	-----	-----	1
	4"	E08340036	-----	-----	-----	1
	5"	E08350036	-----	-----	-----	1
	6"	E08360036	-----	-----	-----	1
SCH. 80 SPECIAL RADIUS ELBOW BELLED - 45° 48" RADIUS						
	1"	E08310048	-----	-----	-----	1
	1 1/4"	E08312548	-----	-----	-----	1
	1 1/2"	E08315048	-----	-----	-----	1
	2"	E08320048	-----	-----	-----	1
	2 1/2"	E08325048	-----	-----	-----	1
	3"	E08330048	-----	-----	-----	1
	4"	E08340048	-----	-----	-----	1
	5"	E08350048	-----	-----	-----	1

Rigid PVC Conduit Fittings

With Brass Fasteners

Item	Size in Inches	Part Number	Reference Royal	Reference CANTEX	Reference Thomas & Betts - Carlon	Carton Qty
BRASS FASTENER PRODUCTS - ACCESS FITTING - TYPE LB						
	1/2″	E533050	RSLB10S	-----	-----	25
	3/4″	E533075	RSLB20S	-----	-----	25
	1″	E533100	RSLB30S	-----	-----	15
	1 1/4″	E533125	RSLB40S	-----	-----	20
	1 1/2″	E533150	RSLB50S	-----	-----	10
	2″	E533200	RSLB60S	-----	-----	15
	2 1/2″	E533250	RSLB70S	-----	-----	5
	3″	E533300	RSLB80S	-----	-----	5
	3 1/2″	E533350	RSLB90S	-----	-----	5
	4″	E533400	RSLB100S	-----	-----	5
BRASS FASTENER PRODUCTS - ACCESS FITTING - TYPE C						
	1/2″	E532050	RSC10S	-----	-----	30
	3/4″	E532075	RSC20S	-----	-----	20
	1″	E532100	RSC30S	-----	-----	15
	1 1/4″	E532125	RSC40S	-----	-----	15
	1 1/2″	E532150	RSC50S	-----	-----	10
	2″	E532200	RSC60S	-----	-----	15
	2 1/2″	E532250	RSC70S	-----	-----	4
	3″	E532300	RSC80S	-----	-----	4
	3 1/2″	E532350	RSC90S	-----	-----	4
	4″	E532400	RSC100S	-----	-----	4
BRASS FASTENER PRODUCTS - ACCESS FITTING - TYPE LL						
	1/2″	E534050	RSLL10S	-----	-----	25
	3/4″	E534075	RSLL20S	-----	-----	20
	1″	E534100	RSLL30S	-----	-----	15
	1 1/4″	E534125	RSLL40S	-----	-----	10
	1 1/2″	E534150	RSLL50S	-----	-----	10
	2″	E534200	RSLL60S	-----	-----	10
	2 1/2″	E534250	RSLL70S	-----	-----	4
	3″	E534300	RSLL80S	-----	-----	4
	3 1/2″	E534350	RSLL90S	-----	-----	5
	4″	E534400	RSLL100S	-----	-----	5

Rigid PVC Conduit Fittings

With Brass Fasteners

Item	Size in Inches	Part Number	Reference Royal	Reference CANTEX	Reference Thomas & Betts - Carlon	Carton Qty
BRASS FASTENER PRODUCTS - ACCESS FITTING - TYPE LR						
	1/2″	E535050	RSLR10S	-----	-----	25
	3/4″	E535075	RSLR20S	-----	-----	20
	1″	E535100	RSLR30S	-----	-----	15
	1 1/4″	E535125	RSLR40S	-----	-----	10
	1 1/2″	E535150	RSLR50S	-----	-----	10
	2″	E535200	RSLR60S	-----	-----	10
	2 1/2″	E535250	RSLR70S	-----	-----	4
	3″	E535300	RSLR80S	-----	-----	4
	3 1/2″	E535350	RSLR90S	-----	-----	5
	4″	E535400	RSLR100S	-----	-----	5
BRASS FASTENER PRODUCTS - ACCESS FITTING - TYPE E						
	1/2″	E536050	RSE10S	-----	-----	30
	3/4″	E536075	RSE20S	-----	-----	20
	1″	E536100	RSE30S	-----	-----	15
	1 1/4″	E536125	RSE40S	-----	-----	20
	1 1/2″	E536150	RSE50S	-----	-----	10
	2″	E536200	RSE60S	-----	-----	15
	2 1/2″	E536250	RSE70S	-----	-----	4
	3″	E536300	RSE80S	-----	-----	4
	3 1/2″	E536350	RSE90S	-----	-----	4
	4″	E536400	RSE100S	-----	-----	4
BRASS FASTENER PRODUCTS - ACCESS FITTING - TYPE T						
	1/2″	E537050	RST10S	-----	-----	30
	3/4″	E537075	RST20S	-----	-----	20
	1″	E537100	RST30S	-----	-----	25
	1 1/4″	E537125	RST40S	-----	-----	15
	1 1/2″	E537150	RST50S	-----	-----	10
	2″	E537200	RST60S	-----	-----	10
	2 1/2″	E537250	RST70S	-----	-----	4
	3″	E537300	RST80S	-----	-----	4
	3 1/2″	E537350	RST90S	-----	-----	4
	4″	E537400	RST100S	-----	-----	4
BRASS FASTENER PRODUCTS - ACCESS FITTING - TYPE TB						
	1/2″	E569050	RSTB10S	-----	-----	30
	3/4″	E569075	RSTB20S	-----	-----	20
	1″	E569100	RSTB30S	-----	-----	10
	1 1/4″	E569125	RSTB40S	-----	-----	10

Rigid PVC Conduit Fittings

With Brass Fasteners

Item	Size in Inches	Part Number	Reference Royal	Reference CANTEX	Reference Thomas & Betts - Carlon	Carton Qty
BRASS FASTENER PRODUCTS - JUNCTION BOX WITH GASKET						
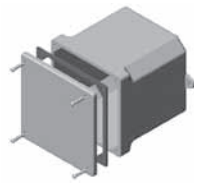	4" X 4" X 2"	E551442	RJB442	------	------	15
	4" X 4" X 4"	E551444	RJB444	------	------	10
	4" X 4" X 6"	E551446	RJB446	------	------	8
	5" X 5" X 2"	E551552	RJB552	------	------	12
	6" X 6" X 4"	E551664	RJB664	------	------	15
	6" X 6" X 6"	E551666	RJB666	------	------	4
	8" X 8" X 4"	E551884	RJB884	------	------	4
	8" X 8" X 7"	E551887	RJB887	------	------	4
	12" X 12" X 4"	E55112124	RJB12124	------	------	2
	12" X 12" X 6"	E55112126	RJB12126	------	------	4
	12" X 12" X 8"	E55112128	RJB12128	------	------	3
BRASS FASTENER PRODUCTS - SINGLE GANG BOX - F SERIES						
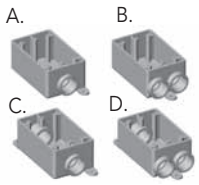	A. 1/2" FS	E542001	RFS10	------	------	10
	A. 3/4" FS	E542002	RFS15	------	------	10
	B. 1/2" FSS	E542003	RFSS10	------	------	10
	B. 3/4" FSS	E542004	RFSS15	------	------	10
	C. 1/2" FSC	E542005	RFSC10	------	------	10
	C. 3/4" FSC	E542006	RFSC15	------	------	10
	D. 1/2" FSCC	E542007	RFSCC10	------	------	10
	D. 3/4" FSCC	E542008	RFSCC15	------	------	10
BRASS FASTENER PRODUCTS - SINGLE GANG DEEP BOX - FD SERIES						
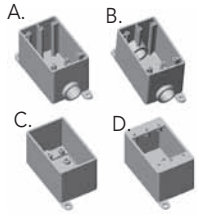	A. 1/2" FDS	E543001	RFDS10	------	------	10
	A. 3/4" FDS	E543002	RFDS15	------	------	10
	A. 1" FDS	E543003	RFDS20	------	------	10
	B. 1/2" FDC	E543004	RFDC10	------	------	10
	B. 3/4" FDC	E543005	RFDC15	------	------	10
	B. 1" FDC	E543006	RFDC20	------	------	10
	C. BLANK	E543007	RFD	------	------	10
BRASS FASTENER PRODUCTS - DOUBLE GANG BOX - F SERIES						
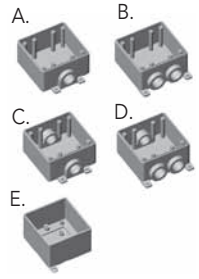	A. 1/2" FS	E541001	------	------	------	10
	A. 3/4" FS	E541002	------	------	------	10
	A. 1" FS	E541003	------	------	------	10
	B. 1/2" FSS	E541004	------	------	------	10
	B. 3/4" FSS	E541005	------	------	------	10
	B. 1" FSS	E541006	------	------	------	10
	C. 1/2" FSC	E541007	------	------	------	10
	C. 3/4" FSC	E541008	------	------	------	10
	C. 1" FSC	E541009	------	------	------	10
	D. 1/2" FSCC	E541011	------	------	------	10
	D. 3/4" FSCC	E541012	------	------	------	10
	D. 1" FSCC	E541013	------	------	------	10
	E. BLANK	E541010	------	------	------	10

Rigid PVC Conduit Fittings

With Brass Fasteners

Item	Size in Inches	Part Number	Reference Royal	Reference CANTEX	Reference Thomas & Betts - Carlon	Carton Qty
BRASS FASTENER PRODUCTS - SINGLE GANG COVER PLATE - F SERIES						
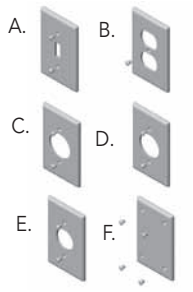	A. TOGGLE	E546002	RTSC15/10	------	------	100
	B. DUPLEX	E546001	RDRC15/10	------	------	100
	C. 15 AMP	E546004	R20RC15/10	------	------	100
	D. 20 AMP	E546003	R20 3RC15/10	------	------	100
	E. 30 AMP	E546005	R30 3RC15/10	------	------	100
	F. BLANK W/ GASKET	E546006	RBRC15/10	------	------	100
BRASS FASTENER PRODUCTS - DOUBLE GANG WEATHERPROOF COVER PLATE						
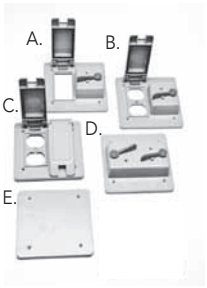	B. GFI & TOGGLE	E549005	------	------	------	10
	C. DUPLEX & TOGGLE	E549006	------	------	------	10
	D. DOUBLE DU PLEX	E549007	------	------	------	10
	E. TOGGLE	E549008	------	------	------	10
	F. BLANK	E549009	------	------	------	25
BRASS FASTENER PRODUCTS - SINGLE GANG WEATHERPROOF COVER PLATE						
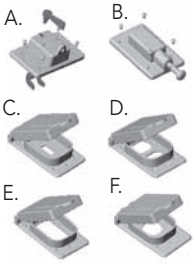	A. TOGGLE S/ COVER	E547002	RVSC15/10	------	------	20
	B. PLUNGER S/ COVER	E547008	RVPT15/10	------	------	20
	C. TOGGLE	E547009	RWTG15/10	------	------	20
	D. DUPLEX	E547001	RWDR15/10	------	------	20
	D. DUPLEX WHITE	E547010	RWDR15/10W	------	------	20
	E. GROUND FAULT	E547007	RWGF15/10	------	------	20
	E. GROUND FAULT WHITE	E547011	RWGF15/10W	------	------	20
	F. 15 AMP	E547003	RWTL15	------	------	20
	F. 20 AMP	E547004	RWTL20	------	------	20
	F. 30 AMP	E547005	RWTL30	------	------	20
	F. 50 AMP	E547006	RWTL50	------	------	20

ENT - Tubing

Electrical Non-Metallic Tubing

Item	Size in Inches	Part Number	Reference Royal	Reference CANTEX	Reference Thomas & Betts - Carlon	Carton Qty
COILS - BLUE ENT TUBING						
						FEET
	1/2	EC005200BL	-----	A51AEB1	12005 200	200
	3/4	EC007100BL	-----	A51AGA1	12007 100	100
	1	EC010100BL	-----	A51BAA1	12008 100	100
	1 1/4	EC012350BL	-----	-----	-----	350
	1 1/2	EC015300BL	-----	-----	-----	300
	2	EC020250BL	-----	-----	-----	250
COILS - GREY ENT TUBING						
						FEET
	1/2	EC005370	EC005370	-----	-----	370
	3/4	EC007240	EC007240	-----	-----	240
	1	EC010160	EC010160	-----	-----	160
	1 1/4	EC012500	EC012500	-----	-----	500
	1 1/2	EC015300	EC015300	-----	-----	300
	2	EC020225	EC020225	-----	-----	225
REELS - BLUE ENT TUBING						
						FEET
	1/2	ER 0051500BL	-----	A51AEQ1	12005AK 001	1,500
	3/4	ER 0071000BL	-----	A51AGJ1	12007AA 001	1,000
	1	ER 0101000BL	-----	A51BAJ1	-----	1,000
	1 1/4	ER 0121000BL	-----	-----	-----	1,000
	1 1/2	ER015750BL	-----	-----	12010 750	750
	2	ER020500BL	-----	-----	12011 500	500

ENT - Tubing

Electrical Non-Metallic Tubing

Item	Size in Inches	Part Number	Reference Royal	Reference CANTEX	Reference Thomas & Betts - Carlon	Carton Qty
REELS - GREY ENT TUBING						
						FEET
	1/2	ER0052000	ER0052000	-----	-----	2,000
	3/4	ER0071500	ER0071500	-----	-----	1,500
	1	ER0101000	ER0101000	-----	-----	1,000
	1 1/4	ER0121000	ER0121000	-----	-----	1,000
	1 1/2	ER015750	ER015750	-----	-----	750
	2	ER020500	ER020500	-----	-----	500
STRAIGHT LENGTH - BLUE ENT TUBING						
						EACH
	1/2	ES00510BL	-----	-----	-----	100
	3/4	ES00710BL	-----	-----	-----	100
	1	ES01010BL	-----	-----	-----	100
STRAIGHT LENGTH - GREY ENT TUBING						
					SUPPLIED IN 10 FOOT LENGTHS	
						EACH
	1/2	ES00510	ES00510	-----	-----	100
	3/4	ES00710	ES00710	-----	-----	100
	1	ES01010	ES01010	-----	-----	100

ENT - Fittings

Electrical Non-Metallic Fittings

Item	Size in Inches	Part Number	Reference Royal	Reference CANTEX	Reference Thomas & Betts - Carlon	Carton Qty
ENT COUPLING						
	1/2	RKC10	RKC10	5163380	A240D	150
	3/4	RKC15	RKC15	5163381	A240E	100
	1	RKC20	RKC20	5163382	A240F	50
	1 1/4	RKC25	RKC25	-----	-----	50
	1 1/2	RKC30	RKC30	-----	-----	40
	2	RKC35	RKC35	-----	-----	25
ENT THREADED TERMINAL ADAPTER WITH LOCK NUT						
	1/2	RKTA10	RKTA10	5163415	-----	150
	3/4	RKTA15	RKTA15	5163416	-----	100
	1	RKTA20	RKTA20	5163417	-----	50
	1 1/4	RKTA25	RKTA25	-----	-----	50
	1 1/2	RKTA30	RKTA30	-----	-----	50
	2	RKTA35	RKTA35	-----	-----	25
ENT ADAPTER WITH SET SCREW						
	1/2	RKTC10	RKTC10	-----	A245D	125
	3/4	RKTC15	RKTC15	-----	A245E	100
	1	RKTC20	RKTC20	-----	A245F	50
	1 1/4	RKTC25	RKTC25	-----	-----	50
	1 1/2	RKTC30	RKTC30	-----	-----	40
	2	RKTC35	RKTC35	-----	-----	15
ENT QUICK SNAP TERMINAL ADAPTER						
	1/2	RKTS10	RKTS10	5163405	A253D	150
	3/4	RKTS15	RKTS15	5163406	A253E	100
	1	RKTS20	RKTS20	5163407	A253F	50
ENT CLIP RING						
	1/2	RKR10	RKR10	-----	-----	200†
	3/4	RKR15	RKR15	-----	-----	200†
	1	RKR20	RKR20	-----	-----	200†
	1 1/4	RKR25	RKR25	-----	-----	100*
	1 1/2	RKR30	RKR30	-----	-----	100*
	2	RKR35	RKR35	-----	-----	50^

Rings are net priced per bag as follows: † = 20/bag * = 10/bag ^ = 5/bag

ENT - Fittings

Electrical Non-Metallic Fittings

Item	Size in Inches	Part Number	Reference Royal	Reference CANTEX	Reference Thomas & Betts - Carlon	Carton Qty
HEAVY DUTY LOCK NUT						
	1/2	RLN10	RLN10	-----	-----	200
	3/4	RLN15	RLN15	-----	-----	200
	1	RLN20	RLN20	-----	-----	200
	1 1/4	RLN25	RLN25	-----	-----	200
	1 1/2	RLN30	RLN30	-----	-----	200
	2	RLN35	RLN35	-----	-----	200
STRAIGHT STUBBY (POLYETHYLENE)						
	1/2	RECM10	RECM10	EN050SBY	A210D	150
	3/4	RECM15	RECM15	EN075SBY	A210E	150
	1	RECM20	RECM20	EN100SBY	A210F	200
	1 1/4	RECM25	RECM25	-----	-----	200
45 DEGREE ANGLED FORM STUBBY (POLYETHYLENE)						
	1/2	RKASTB10	RKASTB10	-----	A220D	50
	3/4	RKASTB15	RKASTB15	-----	A220E	50
	1	RKASTB20	RKASTB20	-----	A220F	50
	1 1/4	RKASTB25	RKASTB25	-----	A220G	50
	1 1/2	RKASTB30	RKASTB30	-----	A220H	50
	2	RKASTB35	RKASTB35	-----	A220J	50
TAPERED PLUG (POLYETHYLENE)						
	1/2	RTP10	RTP10	-----	-----	250
	3/4	RTP15	RTP15	-----	-----	100
	1	RTP20	RTP20	-----	-----	100
SLAB BOX EXTENSION						
	1" EXTENSION	RSMBXTENSION	RSMBXTENSION	-----	-----	20

ENT - Fittings

Electrical Non-Metallic Fittings

Item	Size in Inches	Part Number	Reference Royal	Reference CANTEX	Reference Thomas & Betts - Carlon	Carton Qty
ENT SLAB BOX WITH HUB EXTENSIONS AND GREY LID						
	1/2 (8)	RSMB H 10	RSMB H 10	ENS0500C	------	25
	1/2 (4) 3/4 (4)	RSMB H 10 15	RSMB H 10 15	ENS0507C	------	25
	1/2 (4) 3/4 (2)	RSMB H 10 15 20	RSMB H 10 15 20	------	------	25
	1 (2)			------	------	
	1/2 (4) 1 (4)	RSMB H 10 20	RSMB H 10 20	------	------	25
	3/4 (8)	RSMB H 15	RSMB H 15	------	------	25
	3/4 (4) 1 (4)	RSMB H 15 20	RSMB H 15 20	------	------	25
ENT SLAB BOX WITH KNOCKOUTS AND GREY LID						
	1/2 (8)	RSMB 10	RSMB 10	ENS0500K	------	25
	1/2 (4) 3/4 (4)	RSMB 10 15	RSMB 10 15	ENS0507K	------	25
	1/2 (4) 3/4 (2)	RSMB 10 15 20	RSMB 10 15 20	------	------	25
	1 (2)			------	------	
	1/2 (2) 3/4 (4)	RSMB 15 20 10	RSMB 15 20 10	------	------	25
	1 (2)			------	------	
	3/4 (8)	RSMB 15	RSMB 15	------	------	25
ENT SHALLOW SLAB BOX						
	1/2 (8)	RSMBS H 10	RSMBS H 10	------	------	25
	1/2 (4) 3/4 (4)	RSMBS H 10 15	RSMBS H 10 15	------	------	25
	1/2 (4) 3/4 (2)	RSMBS H 10 15 20	RSMBS H 10 15 20	------	------	25
	1 (2)			------	------	
	1/2 (4) 1 (4)	RSMBS H 10 20	RSMBS H 10 20	------	------	25
	3/4 (8)	RSMBS H 15	RSMBS H 15	------	------	25
	3/4 (4) 1 (4)	RSMBS H 15 20	RSMBS H 15 20	------	------	25
ENT ISOLATOR MODULE SLAB BOX						
	1/2 (8)	RSMB 10 IMB	RSMB 10 IMB	------	------	20
	1/2 (4) 3/4 (4)	RSMB 10 15 IMB	RSMB 10 15 IMB	------	------	20
	1/2 (4) 3/4 (2)	RSMB 10 15 20 IMB	RSMB 10 15 20 IMB	------	------	20
	1 (2)			------	------	
	1/2 (4) 1 (4)	RSMB 10 20 IMB	RSMB 10 20 IMB	------	------	20
	3/4 (8)	RSMB 15 IMB	RSMB 15 IMB	------	------	20
	3/4 (4) 1 (4)	RSMB 15 20 IMB	RSMB 15 20 IMB	------	------	20

ENT - Fittings

Electrical Non-Metallic Fittings

Item	Size in Inches	Part Number	Reference Royal	Reference CANTEX	Reference Thomas & Betts - Carlon	Carton Qty
ENT SHALLOW SINGLE GANG CONCRETE WALL BOX						
	1/2	RSVSB H 10	RSVSB H 10	------	------	70
	3/4	RSVSB H 15	RSVSB H 15	------	------	70
	1	RSVSB H 20	RSVSB H 20	------	------	70
ENT DEEP SINGLE GANG CONCRETE WALL BOX						
	1/2 (8)	RSVDB H 10	RSVDB H 10	------	------	25
	1/2 (4) 3/4 (4)	RSVDB H 10 15	RSVDB H 10 15	------	------	25
	1/2 (4) 3/4 (2)	RSVDB H 10 15 20	RSVDB H 10 15 20	------	------	25
	1 (2)					
	1/2 (4) 1 (4)	RSVDB H 10 20	RSVDB H 10 20	------	------	25
	3/4 (8)	RSVDB H 15	RSVDB H 15	------	------	25

PVC Enclosures

Electrical Non-Metallic PVC Enclosures

Item	Size in Inches	Part Number	Reference Royal	Reference CANTEX	Reference Thomas & Betts - Carlon	Weight Each Lbs.
ELECTRICAL TROUGH BOX (SCREW COVER)						
	4 X 4 X 12	ETR040412	ETR040412	-----	-----	3
	4 X 4 X 18	ETR040418	ETR040418	-----	-----	4
	4 X 4 X 24	ETR040424	ETR040424	-----	-----	5
	4 X 4 X 36	ETR040436	ETR040436	-----	-----	8
	4 X 4 X 48	ETR040448	ETR040448	-----	-----	10
	4 X 4 X 60	ETR040460	ETR040460	-----	-----	12
	6 X 6 X 12	ETR060612	ETR060612	-----	-----	5
	6 X 6 X 18	ETR060618	ETR060618	-----	-----	7
	6 X 6 X 24	ETR060624	ETR060624	-----	-----	8
	6 X 6 X 36	ETR060636	ETR060636	-----	-----	11
	6 X 6 X 48	ETR060648	ETR060648	-----	-----	14
	6 X 6 X 60	ETR060660	ETR060660	-----	-----	17
	8 X 8 X 12	ETR080812	ETR080812	-----	-----	7
	8 X 8 X 18	ETR080818	ETR080818	-----	-----	9
	8 X 8 X 24	ETR080824	ETR080824	-----	-----	11
	8 X 8 X 36	ETR080836	ETR080836	-----	-----	15
	8 X 8 X 48	ETR080848	ETR080848	-----	-----	19
	8 X 8 X 60	ETR080860	ETR080860	-----	-----	23
	12 X 12 X 24	ETR121224	ETR121224	-----	-----	27
	12 X 12 X 36	ETR121236	ETR121236	-----	-----	33
	12 X 12 X 48	ETR121248	ETR121248	-----	-----	39
	12 X 12 X 60	ETR121260	ETR121260	-----	-----	45
ELECTRICAL TROUGH BOX (LATCH COVER)						
	4 X 4 X 12	ELC040412	ELC040412	-----	-----	3
	4 X 4 X 18	ELC040418	ELC040418	-----	-----	4
	4 X 4 X 24	ELC040424	ELC040424	-----	-----	5
	4 X 4 X 36	ELC040436	ELC040436	-----	-----	8
	4 X 4 X 48	ELC040448	ELC040448	-----	-----	10
	4 X 4 X 60	ELC040460	ELC040460	-----	-----	12
	6 X 6 X 12	ELC060612	ELC060612	-----	-----	5
	6 X 6 X 18	ELC060618	ELC060618	-----	-----	7
	6 X 6 X 24	ELC060624	ELC060624	-----	-----	8
	6 X 6 X 36	ELC060636	ELC060636	-----	-----	11
	6 X 6 X 48	ELC060648	ELC060648	-----	-----	14
	6 X 6 X 60	ELC060660	ELC060660	-----	-----	17
	8 X 8 X 12	ELC080812	ELC080812	-----	-----	7
	8 X 8 X 18	ELC080818	ELC080818	-----	-----	9
	8 X 8 X 24	ELC080824	ELC080824	-----	-----	11
	8 X 8 X 36	ELC080836	ELC080836	-----	-----	15
	8 X 8 X 48	ELC080848	ELC080848	-----	-----	19
	8 X 8 X 60	ELC080860	ELC080860	-----	-----	23
	12 X 12 X 24	ELC121224	ELC121224	-----	-----	27
	12 X 12 X 36	ELC121236	ELC121236	-----	-----	33
	12 X 12 X 48	ELC121248	ELC121248	-----	-----	39

PVC Enclosures

Electrical Non-Metallic PVC Enclosures





Item	Size in Inches	Part Number	Reference Royal	Reference CANTEX	Reference Thomas & Betts - Carlon	Weight Each Lbs.
LARGE FABRICATED JUNCTION BOXES						
	12 X 10 X 6	E053121006	E053121006	-----	-----	8
	12 X 10 X 8	E053121008	E053121008	-----	-----	9
	12 X 12 X 4	E053121204	E053121204	-----	-----	7
	12 X 12 X 6	E053121206	E053121206	-----	-----	9
	12 X 12 X 8	E053121208	E053121208	-----	-----	10
	12 X 12 X 12	E053121212	E053121212	-----	-----	14
	14 X 12 X 4	E053141204	E053141204	-----	-----	9
	14 X 12 X 6	E053141206	E053141206	-----	-----	10
	14 X 12 X 8	E053141208	E053141208	-----	-----	12
	14 X 14 X 4	E053141404	E053141404	-----	-----	10
	14 X 14 X 6	E053141406	E053141406	-----	-----	12
	14 X 14 X 8	E053141408	E053141408	-----	-----	14
	14 X 14 X 10	E053141410	E053141410	-----	-----	16
	14 X 14 X 14	E053141414	E053141414	-----	-----	19
	16 X 16 X 10	E053161610	E053161610	-----	-----	21
	16 X 16 X 12	E053161612	E053161612	-----	-----	23
	16 X 16 X 16	E053161616	E053161616	-----	-----	22
	18 X 12 X 4	E053181204	E053181204	-----	-----	10
	18 X 12 X 6	E053181206	E053181206	-----	-----	12
	18 X 12 X 8	E053181208	E053181208	-----	-----	13
	18 X 16 X 4	E053181604	E053181604	-----	-----	12
	18 X 16 X 6	E053181606	E053181606	-----	-----	14
	18 X 16 X 8	E053181608	E053181608	-----	-----	16
	18 X 18 X 6	E053181806	E053181806	-----	-----	16
	18 X 18 X 8	E053181808	E053181808	-----	-----	18
	18 X 18 X 10	E053181810	E053181810	-----	-----	20
	18 X 18 X 12	E053181812	E053181812	-----	-----	22
	18 X 18 X 18	E053181818	E053181818	-----	-----	26
	20 X 18 X 8	E053201808	E053201808	-----	-----	20
	20 X 20 X 8	E053202008	E053202008	-----	-----	22
	24 X 18 X 6	E053241806	E053241806	-----	-----	20
	24 X 18 X 8	E053241808	E053241808	-----	-----	22
	24 X 18 X 12	E053241812	E053241812	-----	-----	25
	24 X 20 X 8	E053242008	E053242008	-----	-----	25
	24 X 24 X 6	E053242406	E053242406	-----	-----	25
	24 X 24 X 8	E053242408	E053242408	-----	-----	28
	24 X 24 X 10	E053242410	E053242410	-----	-----	33
	24 X 24 X 12	E053242412	E053242412	-----	-----	35
	24 X 24 X 24	E053242424	E053242424	-----	-----	40
	30 X 24 X 8	E053302408	E053302408	-----	-----	34
	30 X 30 X 10	E053303010	E053303010	-----	-----	39
	30 X 30 X 20	E053303020	E053303020	-----	-----	48
	30 X 30 X 30	E053303030	E053303030	-----	-----	60
	36 X 24 X 8	E053362408	E053362408	-----	-----	39
	36 X 36 X 12	E053363612	E053363612	-----	-----	61
	36 X 36 X 18	E053363618	E053363618	-----	-----	65
	36 X 36 X 20	E053363620	E053363620	-----	-----	67
	36 X 36 X 36	E053363636	E053363636	-----	-----	70
	40 X 40 X 12	E053404012	E053404012	-----	-----	78
	40 X 40 X 20	E053404020	E053404020	-----	-----	88

PVC Enclosures

Electrical Non-Metallic PVC Enclosures

Item	Size in Inches	Part Number	Reference Royal	Reference CANTEX	Reference Thomas & Betts - Carlon	Weight Each Lbs.
ELECTRICAL ENCLOSURES						
	20 X 12 X 8	EBH201208	EBH201208	-----	-----	14
	20 X 16 X 6	EBH201606	EBH201606	-----	-----	16
	20 X 16 X 8	EBH201608	EBH201608	-----	-----	17
	20 X 16 X 10	EBH201610	EBH201610	-----	-----	20
	20 X 16 X 12	EBH201612	EBH201612	-----	-----	22
	20 X 20 X 6	EBH202006	EBH202006	-----	-----	18
	20 X 20 X 8	EBH202008	EBH202008	-----	-----	21
	20 X 20 X 10	EBH2022010	EBH2022010	-----	-----	23
	20 X 24 X 6	EBH2022406	EBH2022406	-----	-----	21
	20 X 24 X 8	EBH202408	EBH202408	-----	-----	24
	24 X 12 X 6	EBH241206	EBH241206	-----	-----	15
	24 X 12 X 8	EBH241208	EBH241208	-----	-----	17
	24 X 12 X 10	EBH241210	EBH241210	-----	-----	19
	24 X 16 X 6	EBH241606	EBH241606	-----	-----	18
	24 X 16 X 8	EBH241608	EBH241608	-----	-----	20
	24 X 20 X 8	EBH242008	EBH242008	-----	-----	24
	24 X 20 X 10	EBH242010	EBH242010	-----	-----	26
	24 X 20 X 12	EBH242012	EBH242012	-----	-----	29
	24 X 20 X 16	EBH242016	EBH242016	-----	-----	34
	24 X 24 X 6	EBH242406	EBH242406	-----	-----	25
	24 X 24 X 8	EBH242408	EBH242408	-----	-----	28
	24 X 24 X 10	EBH242410	EBH242410	-----	-----	30
	24 X 24 X 12	EBH242412	EBH242412	-----	-----	33
	24 X 24 X 16	EBH242416	EBH242416	-----	-----	38
	24 X 30 X 8	EBH243008	EBH243008	-----	-----	33
	30 X 16 X 6	EBH301606	EBH301606	-----	-----	22
	30 X 20 X 6	EBH302006	EBH302006	-----	-----	26
	30 X 20 X 8	EBH302008	EBH302008	-----	-----	29
	30 X 20 X 10	EBH302010	EBH302010	-----	-----	32
	30 X 24 X 6	EBH302406	EBH302406	-----	-----	30
	30 X 24 X 8	EBH302408	EBH302408	-----	-----	33
	30 X 24 X 10	EBH302410	EBH302410	-----	-----	36
	30 X 24 X 12	EBH302412	EBH302412	-----	-----	39
	30 X 24 X 16	EBH302416	EBH302416	-----	-----	45
	30 X 24 X 20	EBH302420	EBH302420	-----	-----	51
	30 X 24 X 24	EBH302424	EBH302424	-----	-----	57
	30 X 30 X 8	EBH303008	EBH303008	-----	-----	39
	30 X 30 X 12	EBH303012	EBH303012	-----	-----	46
	30 X 36 X 8	EBH303608	EBH303608	-----	-----	46
	36 X 24 X 6	EBH362406	EBH362406	-----	-----	35
	36 X 24 X 8	EBH362408	EBH362408	-----	-----	29
	36 X 24 X 10	EBH362410	EBH362410	-----	-----	42

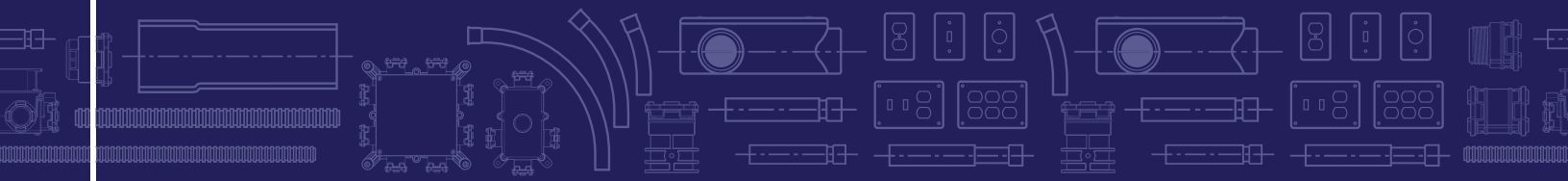

Our various pipe and fittings solutions have been manufactured to meet the needs of our customers and their applications. Contact the below Sales Center for more information:

- Plumbing Fittings Solutions
- Electrical Pipe & Fittings Solutions
- Municipal Pipe & Fittings Solutions



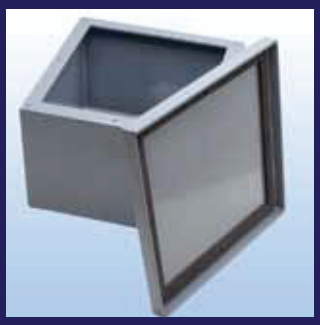

Sales & Distribution Center:

Royal Building Products
56400 Mound Road
Shelby Twp., MI 48316
T 1.800.232.5690
F 586.781.0888

royalbuildingproducts.com/plastic-trends

Printed 11.2012

ROYAL
Building Products

Pipe & Fittings Solutions | Municipal Plumbing Electrical

Electrical Non-Metallic PVC Products

PVC Fittings
ENT Pipe and Fittings
Enclosures

Category E Product BRV1
October, 2012

E Series







ROYAL Electrical Solutions

Contents

Rigid PVC Conduit Fittings

Pages 4 - 25

Shown in Alphabetical Order

Access Fittings 6-8
- Type C 6
- Type E 7
- Type LB 6
- Type LL 7
- Type LR 7
- Type T 8
- Type TB 8

Bell End (Hub X Spigot) - Molded 9
Coupling 4
5° Coupling 4
Double Gang Box - F Series 12
Double Gang Weatherproof Cover Plate 11
Duct - Base Vertical Lock Spacer 15
Duct - Intermediate Vertical Lock Spacer 14
Duplex Floor Box Cover 13
Duplex Floor Box 13
ECOVOC Low VOC / Clear Cement 15

Elbows 16-25
Schedule 40
- Radius Elbow Belled - 45° 24" Radius 22
- Special Radius Elbow Belled - 45° 36" Radius 22
- Special Radius Elbow Belled - 45° 48" Radius 22
- Special Radius Elbow Belled - 90° 24" Radius 21
- Special Radius Elbow Belled - 90° 36" Radius 21
- Special Radius Elbow Belled - 90° 48" Radius 22
- Special Radius Elbow Plain End - 45° 24" Radius 20
- Special Radius Elbow Plain End - 45° 36" Radius 21
- Special Radius Elbow Plain End - 45° 48" Radius 21
- Special Radius Elbow Plain End - 90° 24" Radius 19
- Special Radius Elbow Plain End - 90° 36" Radius 20
- Special Radius Elbow Plain End - 90° 48" Radius 20
- Standard Elbows - 11 1/4° Elbow - Plain End 17
- Standard Elbows - 22 1/2° Elbow - Plain End 17
- Standard Elbows - 30° Elbow - Bell End 18
- Standard Elbows - 30° Elbow - Plain End 17
- Standard Elbows - 45° Elbow - Bell End 18
- Standard Elbows - 45° Elbow - Plain End 16
- Standard Elbows - 90° Elbow - Bell End 18
- Standard Elbows - 90° Elbow - Plain End 16

Schedule 80
- Special Radius Elbow Belled - 45° 24" Radius 25
- Special Radius Elbow Belled - 45° 36" Radius 25
- Special Radius Elbow Belled - 45° 48" Radius 25
- Special Radius Elbow Belled - 90° 24" Radius 24
- Special Radius Elbow Belled - 90° 36" Radius 24
- Special Radius Elbow Belled - 90° 48" Radius 24
- Special Radius Elbow Plain End 23
- Special Radius Elbow Plain End - 45° 48" Radius 24
- Special Radius Elbow Plain End - 90° 24" Radius 22
- Special Radius Elbow Plain End - 90° 36" Radius 23
- Special Radius Elbow Plain End - 90° 48" Radius 23
- Standard Elbows - 45° Elbow - Plain End 19
- Standard Elbows - 90° Elbow - Plain End 19

Expansions Joint 5
Junction Box Adapters 13
Junction Box with Gasket 13
KO Plug 12
Meter Offset 5
Meter Riser Kit 14
Octagonal Box 12
Octagonal Box Extension Ring 12
Pipe Strap PVC - 2 Hole 5
Pull Elbow 9
Reducer Bushing 10
Service Entrance Fitting 6
Single Gang Box - F Series 11
Single Gang Cover Plate - F Series 10
Single Gang Deep Box - FD Series 11
Single Gang Weatherproof Cover Plate 11
Slip Meter Riser 14
Solvent Weld End Cap 9
Strain Relief Connector 8
Threaded Strain Relief Connector 8
Terminal Adapter 4
- Female 5
- Male 4

Threaded Reducer Bushing 9
Universal Plug w/Pulling Eye 15
Vinyl Siding Electrical Mount 16

Contents

Rigid PVC Conduit Fittings with Brass Fasteners

Pages 26 - 29

Shown in Alphabetical Order

Access Fitting
- Type C 26
- Type E 27
- Type LL 26
- Type LR 27
- Type T 27
- Type TB 27
- Type LB 26

Double Gang Box - F Serie 28
Double Gang Weatherproof Cover Plate 29
Junction Box with Gasket 28
Single Gang Box - F Series 28
Single Gang Cover Plate - F Series 29
Single Gang Deep Box - FD Series 28
Single Gang Weatherproof Cover Plate 29

ENT - Tubing

Pages 30 - 31

Shown in Alphabetical Order

Coils
- Blue ENT Tubing 30
- Grey ENT Tubing 30

Reels
- Blue ENT Tubing 30
- Grey ENT Tubing 31

Straight Length
- Blue ENT Tubing 31
- Grey ENT Tubing 31

ENT - Fittings

Pages 32 - 35

Shown in Alphabetical Order

45 Degree Angled Form Stubby (Polyethylene) 33
Adapter with set screw 32
Clip Ring 32
Coupling 32
Deep Single Gang Concrete Wall Box 35
Isolator Module Slab Box 34
Quick-Snap Terminal Adapter 32
Shallow Single Gang Concrete Wall Box 35
Shallow Slab Box 34
Slab Box Extension Ring 33
Slab Box with Hub Extensions and Grey Lid 34
Slab Box with Knockouts and Grey Lid 34
Threaded Terminal Adapter with Lock Nut 32
Heavy Duty Lock Nut 33
Straight Stubby (Polyethylene) 33
Tapered Plug (Polyethylene) 33

PVC Enclosures

Pages 36 - 38

Shown in Alphabetical Order

Electrical Enclosures 38
Electrical Trough Box
- Latch Cover 36
- Screw Cover 36

Large Fabricated Junction Boxes 37

Rigid PVC Conduit Fittings

Item	Size in Inches	Part Number	Reference Royal	Reference CANTEX	Reference Thomas & Betts - Carlon	Carton Qty
COUPLING						
	1/2″	E010050	REC10	6141623	E940D	200
	3/4″	E010075	REC15	6141624	E940E	125
	1″	E010100	REC20	6141625	E940F	70
	1 1/4″	E010125	REC25	6141626	E940G	40
	1 1/2″	E010150	REC30	6141627	E940H	30
	2″	E010200	REC35	6141628	E940J	40
	2 1/2″	E010250	REC40	6141629	E940K	20
	3″	E010300	REC45	6141630	E940L	40
	3 1/2″	E010350	REC50	6141631	E940M	30
	4″	E010400	REC55	6141632	E940N	20
	5″	E010500	REC60	6141633	E940P	10
	6″	E010600	REC65	6141634	E940R	8
	8″	E010800	-----	6141635D	-----	3
5° COUPLING						
	2″	E013200	R5EC35	6151457	E245J	20
	2 1/2″	E013250	R5EC40	-----	-----	12
	3″	E013300	R5EC45	6151458	-----	25
	3 1/2″	E013350	R5EC50	-----	-----	15
	4″	E013400	R5EC55	6151459	E245N	15
	5″	E013500	R5EC60	6151460	E245P	8
	6″	E013600	R5EC65	6151461	E245R	4
TERMINAL ADAPTER						
	1/2″	E011050	RTA10	5140103	E943D	200
	3/4″	E011075	RTA15	5140104	E943E	125
	1″	E011100	RTA20	5140105	E943F	70
	1 1/4″	E011125	RTA25	5140106	E943G	40
	1 1/2″	E011150	RTA30	5140107	E943H	30
	2″	E011200	RTA35	5140108	E943J	40
	2 1/2″	E011250	RTA40	5140109	E943K	20
	3″	E011300	RTA45	5140110	E943L	40
	3 1/2″	E011350	RTA50	5140111	E943M	30
	4″	E011400	RTA55	5140112	E943N	20
	5″	E011500	RTA60	5140113	E943P	10
	6″	E011600	RTA65	5140114	E943R	8

Rigid PVC Conduit Fittings

Item	Size in Inches	Part Number	Reference Royal	Reference CANTEX	Reference Thomas & Betts - Carlon	Carton Qty
FEMALE ADAPTER (NPT TAPERED THREAD)						
	1/2″	E012050	RFA10	5140043	E942D	200
	3/4″	E012075	RFA15	5140044	E942E	125
	1″	E012100	RFA20	5140045	E942F	70
	1 1/4″	E012125	RFA25	5140046	E942G	40
	1 1/2″	E012150	RFA30	5140047	E942H	30
	2″	E012200	RFA35	5140048	E942J	40
	2 1/2″	E012250	RFA40	5140049	E942K	20
	3″	E012300	RFA45	5140050	E942L	40
	3 1/2″	E012350	RFA50	5140051	E942M	30
	4″	E012400	RFA55	5140052	E942N	20
	5″	E012500	RFA60	5140053	E942P	10
	6″	E012600	RFA65	5140054	E942R	8
EXPANSIONS JOINT						
	1/2″	E016050	REJ10	5144031	E945D	25
	3/4″	E016075	REJ15	5144032	E945E	10
	1″	E016100	REJ20	5144033	E945F	10
	1 1/4″	E016125	REJ25	5144034	E945G	5
	1 1/2″	E016150	REJ30	5144035	E945H	5
	2″	E016200	REJ35	5144036	E945J	25
	2 1/2″	E016250	REJ40	5144037	E945K	12
	3″	E016300	REJ45	5144038	E945L	12
	3 1/2″	E016350	REJ50	5144039	E945M	6
	4″	E016400	REJ55	5144040	E945N	6
	5″	E016500	REJ60	5144041	E945P	1
	6″	E016600	REJ65	5144042	E945R	1
PIPE STRAP PVC - 2 HOLE						
	1/2″	E039050	RPS10	5133736	E977DC	300
	3/4″	E039075	RPS15	5133737	E977EC	200
	1″	E039100	RPS20	5133738	E977FC	200
	1 1/4″	E039125	RPS25	5133733	E977GC	200
	1 1/2″	E039150	RPS30	5133734	E977HC	200
	2″	E039200	RPS35	5133735	E977JC	200
METER OFFSET						
	1 1/4″	E024125	RMO25	5133183	E995G	15
	2″	E024200	RMO35	5133185	E995J	8

Rigid PVC Conduit Fittings

Item	Size in Inches	Part Number	Reference Royal	Reference CANTEX	Reference Thomas & Betts - Carlon	Carton Qty
SERVICE ENTRANCE FITTING						
	1/2″	E025050	REF10	5133590	-----	10
	3/4″	E025075	REF15	5133591	E998E CAR	10
	1″	E025100	REF20	5133741	E998F CAR	20
	1 1/4″	E025125	REF25	5133742	E998G CAR	20
	1 1/2″	E025150	REF30	5133695	E998H CAR	20
	2″	E025200	REF35	5133743	E998J	5
	2 1/2″	E025250	REF40	5133696	E998K UPC	5
	3″	E025300	REF45	5133697	E998L	5
	3 1/2″	E025350	REF50	5133698	-----	5
	4″	E025400	REF55	5133699	E998N	1
ACCESS FITTING - TYPE LB						
	1/2″	E033050	RSLB10S	5133663	E986D CAR	25
	3/4″	E033075	RSLB20S	5133664	E986E CAR	15
	1″	E033100	RSLB30S	5133665	E986F CAR	10
	1 1/4″	E033125	RSLB40S	5133666	E986G CAR	10
	1 1/2″	E033150	RSLB50S	5133667	E986H CAR	10
	2″	E033200	RSLB60S	5133668	E986J	5
	2 1/2″	E033250	RSLB70S	5133669	E986K	5
	3″	E033300	RSLB80S	5133670	E986L	5
	3 1/2″	E033350	RSLB90S	5133671	E986M	4
	4″	E033400	RSLB100S	5133672	E986N	4
ACCESS FITTING - TYPE C						
	1/2″	E032050	RSC10S	5133101	E987D CAR	25
	3/4″	E032075	RSC20S	5133102	E987E CAR	15
	1″	E032100	RSC30S	5133103	E987F CAR	10
	1 1/4″	E032125	RSC40S	5133104	E987G CAR	10
	1 1/2″	E032150	RSC50S	5133105	E987H CAR	10
	2″	E032200	RSC60S	5133106	E987J	5
	2 1/2″	E032250	RSC70S	5133108	-----	5
	3″	E032300	RSC80S	5133107	-----	5
	3 1/2″	E032350	RSC90S	5133110	-----	4
	4″	E032400	RSC100S	5133109	-----	4

Rigid PVC Conduit Fittings

Item	Size in Inches	Part Number	Reference Royal	Reference CANTEX	Reference Thomas & Betts - Carlon	Carton Qty
ACCESS FITTING - TYPE LL						
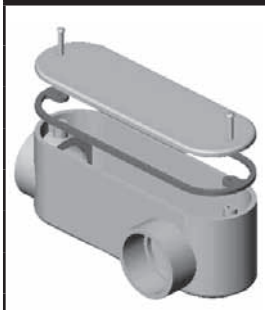	1/2″	E034050	RSLL10S	5133660	E984D CAR	25
	3/4″	E034075	RSLL20S	5133661	E984E CAR	15
	1″	E034100	RSLL30S	5133662	E984F CAR	10
	1 1/4″	E034125	RSLL40S	5133649	E984G CAR	10
	1 1/2″	E034150	RSLL50S	5133648	E984H CAR	10
	2″	E034200	RSLL60S	5133647	E984J	5
	2 1/2″	E034250	RSLL70S	5133644	------	5
	3″	E034300	RSLL80S	5133646	------	5
	3 1/2″	E034350	RSLL90S	5133640	------	4
	4″	E034400	RSLL100S	5133645	------	4
ACCESS FITTING - TYPE LR						
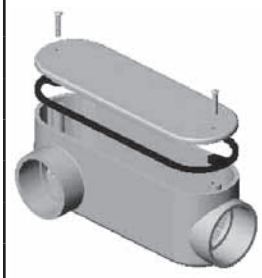	1/2″	E035050	RSLR10S	5133650	E985D CAR	25
	3/4″	E035075	RSLR20S	5133651	E985E CAR	15
	1″	E035100	RSLR30S	5133652	E985F CAR	10
	1 1/4″	E035125	RSLR40S	5133653	E985G CAR	10
	1 1/2″	E035150	RSLR50S	5133654	E985H CAR	10
	2″	E035200	RSLR60S	5133655	E985J	5
	2 1/2″	E035250	RSLR70S	5133658	------	5
	3″	E035300	RSLR80S	5133656	------	5
	3 1/2″	E035350	RSLR90S	5133659	------	4
	4″	E035400	RSLR100S	5133657	------	4
ACCESS FITTING - TYPE E						
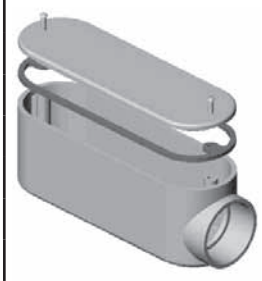	1/2″	E036050	RSE10S	5133151	E998D CAR	25
	3/4″	E036075	RSE20S	5133152	E998E	15
	1″	E036100	RSE30S	5133153	E988F CAR	10
	1 1/4″	E036125	RSE40S	5133154	E988G CAR	10
	1 1/2″	E036150	RSE50S	5133155	E988H CAR	10
	2″	E036200	RSE60S	5133156	E988J	5
	2 1/2″	E036250	RSE70S	5133157	------	5
	3″	E036300	RSE80S	5133158	------	5
	3 1/2″	E036350	RSE90S	5133160	------	4
	4″	E036400	RSE100S	5133159	------	4

Rigid PVC Conduit Fittings

Item	Size in Inches	Part Number	Reference Royal	Reference CANTEX	Reference Thomas & Betts - Carlon	Carton Qty
ACCESS FITTING - TYPE T						
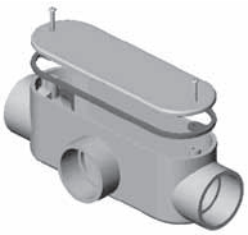	1/2″	E037050	RST10S	5133563	E983D CAR	25
	3/4″	E037075	RST20S	5133564	E983E CAR	15
	1″	E037100	RST30S	5133565	E983F	10
	1 1/4″	E037125	RST40S	5133566	E983G	10
	1 1/2″	E037150	RST50S	5133567	E983H CAR	10
	2″	E037200	RST60S	5133568	E983J	5
	2 1/2″	E037250	RST70S	5133569	-----	2
	3″	E037300	RST80S	5133570	-----	2
	3 1/2″	E037350	RST90S	5133572	-----	1
	4″	E037400	RST100S	5133571	-----	1
ACCESS FITTING - TYPE TB						
	1/2″	E069050	RSTB10S	-----	-----	30
	3/4″	E069075	RSTB20S	-----	-----	20
	1″	E069100	RSTB30S	-----	-----	10
	1 1/4″	E069125	RSTB40S	-----	-----	10
STRAIN RELIEF CONNECTOR						
	3/4″	E030075	RSRC15	-----	-----	25
THREADED STRAIN RELIEF CONNECTOR						
	1/2″	E031050	RTSRC10	5133430	-----	25
	3/4″	E031075	RTSRC15	5133431	-----	25

Rigid PVC Conduit Fittings

Item	Size in Inches	Part Number	Reference Royal	Reference CANTEX	Reference Thomas & Betts - Carlon	Carton Qty
PULL ELBOW						
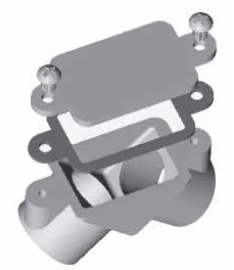	1/2″	E027050	RPE10	5240100	E990DR CAR	75
	3/4″	E027075	RPE15	5240101	E990ER CAR	50
SOLVENT WELD END CAP						
	1/2″	E026050	RCAP10	5140031	E958D	100
	3/4″	E026075	RCAP15	5140032	E958E	100
	1″	E026100	RCAP20	5140033	E958F	50
	1 1/4″	E026125	RCAP25	5140034	E958G	25
	1 1/2″	E026150	RCAP30	5140035	E958H	25
	2″	E026200	RCAP35	5140037	E958J	50
	2 1/2″	E026250	RCAP40	5140038	E958K	25
	3″	E026300	RCAP45	5140039	E958L	25
	4″	E026400	RCAP55	5140040	E958N	25
	5″	E026500	RCAP60	5140041	E958P	25
	6″	E026600	RCAP65	5140042	E958R	10
	8″	E026800	-----	-----	-----	6
THREADED REDUCER BUSHING						
	3/4″ X 1/2″	E0150705	R1825	-----	E9842D	200
	1″ X 1/2″	E0151005	R1826	-----	-----	200
	1″ X 3/4″	E0151007	R1827	-----	E9842E	200
BELL END (HUB X SPIGOT) - MOLDED						
	1/2″	E070050	REB10	5144003	-----	100
	3/4″	E070075	REB15	5144004	-----	100
	1″	E070100	REB20	5144005	E997F	50
	1 1/4″	E070125	REB25	5144006	E997G	50
	1 1/2″	E070150	REB30	5144007	E997H	50
	2″	E070200	REB35	5144008	E997J	40
	2 1/2″	E070250	REB40	5144009	E997K	30
	3″	E070300	REB45	5144010	E997L	50
	3 1/2″	E070350	REB50	5144011	E997M	50
	4″	E070400	REB55	5144012	E997N	50
	5″	E070500	REB60	5144013	E997P	25
	6″	E070600	REB65	5144014	E997R	15

Rigid PVC Conduit Fittings

Item	Size in Inches	Part Number	Reference Royal	Reference CANTEX	Reference Thomas & Betts - Carlon	Carton Qty
REDUCER BUSHING						
	3/4" X 1/2"	E0140705	R1805	5142220	E950ED	100
	1" X 1/2"	E0141005	R1805 1	-----	E950FD CAR	3 BAGS X 100
	1" X 3/4"	E0141007	R1806	5142221	E950FE	100
	1 1/4" X 3/4"	E0141207	R1807 1	-----	E950GE CAR	2 BAGS X 25
	1 1/4" X 1"	E0141210	R1807	5142222	E950GF	50
	1 1/2" X 1"	E0141510	R1808 1	-----	E950HF CAR	50
	1 1/2" X 1 1/4"	E0141512	R1808	514223	E950HG CAR	50
	2" X 1"	E0142010	R1809 1	-----	-----	50
	2" X 1 1/4"	E0142012	R1809	-----	E950JG CAR	25
	2" X 1 1/2"	E0142015	R1810	5142224	E950JH CAR	25
	2 1/2" X 2"	E0142520	R1811	5142225	E950KJ CAR	25
	3" X 2"	E0143020	R1812 1	-----	E950LJ CAR	25
	3" X 2 1/2"	E0143025	R1812	5142226	E950LK	25
	4" X 2"	E0144020	R1813 1	-----	-----	15
	4" X 3"	E0144030	R1813	5142227	E950NL	20
	4" 3 1/2"	E0144035	R1814	5142229	-----	20
SINGLE GANG COVER PLATE - F SERIES						
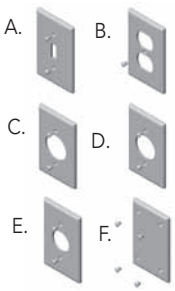	A. TOGGLE	E046002	RTSC15/10	-----	-----	100
	B. DUPLEX	E046001	RDRC15/10	-----	-----	100
	C. 15 AMP	E046004	R20RC15/10	-----	-----	100
	D. 20 AMP	E046003	R20 3RC15/10	-----	-----	100
	E. 30 AMP	E046005	R30 3RC15/10	-----	-----	100
	F. BLANK W/ GASKET	E046006	RBRC15/10	5133362	E980CN CAR	50

Rigid PVC Conduit Fittings

Item	Size in Inches	Part Number	Reference Royal	Reference CANTEX	Reference Thomas & Betts - Carlon	Carton Qty
SINGLE GANG WEATHERPROOF COVER PLATE						
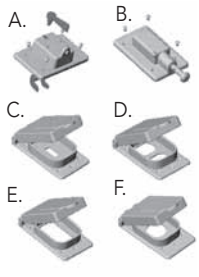	A. TOGGLE S/ COVER	E047002	RVSC15/10	5133330	E98TSCN CAR	10
	B. PLUNGER S/ COVER	E047008	RVPT15/10	5133335	------	10
	C. TOGGLE	E047009	RWTG15/10	5133361	E98SSNCN CAR	10
	D. DUPLEX	E047001	RWDR15/10	5133352	E98GDRN CAR	10
	D. DUPLEX WHITE	E047010	RWDR15/10W	------	------	20
	E. GROUND FAULT	E047007	RWGF15/10	5133348	E98GFCN CAR	10
	E. GROUND FAULT WHITE	E047011	RWGF15/10W	------	------	20
	F. 15 AMP	E047003	RWTL15	5133350	E98SRCN CAR	10
	F. 20 AMP	E047004	RWTL20	5133320	E98G20N	10
	F. 30 AMP	E047005	RWTL30	5133321	E98G30N CAR	10
	F. 50 AMP	E047006	RWTL50	5133322	E98G5FN CAR	10
DOUBLE GANG WEATHERPROOF COVER PLATE						
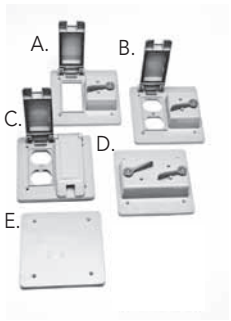	B. GFI & TOGGLE	E049005	------	5133345	E9G2GTN CAR	10
	C. DUPLEX & TOGGLE	E049006	------	5133337	E9GDSN CAR	10
	D. DOUBLE DU PLEX	E049007	------	5133347	E9GDDN CAR	10
	E. TOGGLE	E049008	------	5133331	E9G2SSN	10
	F. BLANK	E049009		5133410	E9802CN CAR	25
SINGLE GANG BOX - F SERIES						
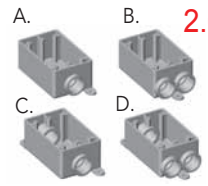	A. 1/2" FS	E042001	RFS10	5133363	E980DFN	10
	A. 3/4" FS	E042002	RFS15	5133364	E980EFN	10
	B. 1/2" FSS	E042003	RFSS10	5133540	E982DFN	10
	B. 3/4" FSS	E042004	RFSS15	5133542	E982EFN	10
	C. 1/2" FSC	E042005	RFSC10	5133463	E981DFN	10
	C. 3/4" FSC	E042006	RFSC15	5133464	E981EFN	10
	D. 1/2" FSCC	E042007	RFSCC10	5133544	E979DFN CAR	10
	D. 3/4" FSCC	E042008	RFSCC15	5133545	E979ERN CAR	10
SINGLE GANG DEEP BOX - FD SERIES						
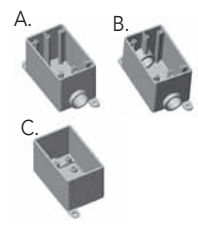	A. 1/2" FDS	E043001	RFDS10	5133300	E9801DN	10
	A. 3/4" FDS	E043002	RFDS15	5133301	E9801EN	10
	A. 1" FDS	E043003	RFDS20	5133302	E9801FN	10
	B. 1/2" FDC	E043004	RFDC10	5133310	E9811DN	10
	B. 3/4" FDC	E043005	RFDC15	5133311	E9811EN	10
	B. 1" FDC	E043006	RFDC20	5133312	E9811FN	10
	C. BLANK	E043007	RFD	5133420	E9801	10

Rigid PVC Conduit Fittings

Item	Size in Inches	Part Number	Reference Royal	Reference CANTEX	Reference Thomas & Betts - Carlon	Carton Qty
DOUBLE GANG BOX - F SERIES						
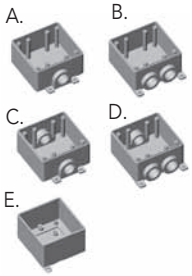	A. 1/2" FS	E041001	-----	5133380	E9802D	5
	A. 3/4" FS	E041002	-----	5133381	E9802E	5
	A. 1" FS	E041003	-----	5133382	E9802F	5
	B. 1/2" FSS	E041004	-----	5133390	-----	5
	B. 3/4" FSS	E041005	-----	5133391	-----	5
	B. 1" FSS	E041006	-----	5133392	-----	5
	C. 1/2" FSC	E041007	-----	5133370	E9812D	5
	C. 3/4" FSC	E041008	-----	5133371	E9812E	5
	C. 1" FSC	E041009	-----	5133372	E9812F	5
	D. 1/2" FSCC	E041011	-----	5133400	-----	5
	D. 3/4" FSCC	E041012	-----	5133401	-----	5
	D. 1" FSCC	E041013	-----	5133402	-----	5
	E. BLANK	E041010	-----	-----	E9802	5
OCTAGONAL BOX						
	4" X 1 1/2" (3/4" X1/2")	E028150	ROB15/10	-----	-----	20
	4" X 2" (1")	E028200	ROB20	-----	-----	12
KO PLUG						
	3/4"	E067075	RKO15	-----	-----	1
	1"	E067100	RTKO20	-----	-----	1
OCTAGONAL BOX EXTENSION RING						
	1"	E029100	RXR20	-----	-----	20
	2"	E029200	RXR35	-----	-----	20

Rigid PVC Conduit Fittings

Item	Size in Inches	Part Number	Reference Royal	Reference CANTEX	Reference Thomas & Betts - Carlon	Carton Qty
DUPLEX FLOOR BOX/ LEVEL RING/ POUR COVER/ REDUCER BUSHING						
	4 - 3/4"	E068004	RFDB4	5133760	E971FB	9
	2 - 1", 2 - 3/4"	E068001	RFDB2	5133758	E971FB	9
DUPLEX FLOOR BOX COVER						
	POLY BRONZE COVER	E068003	RFDBC	5133678		10
JUNCTION BOX WITH GASKET						
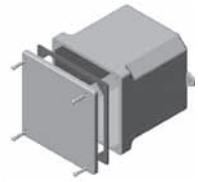	4" X 4" X 2"	E051442	RJB442	5133705	E989NNJ CAR	10
	4" X 4" X 4"	E051444	RJB444	5133709	E987N CAR	10
	4" X 4" X 6"	E051446	RJB446	5133707	E989NNR CAR	10
	5" X 5" X 2"	E051552	RJB552	5133706	E989PPJ CAR	10
	6" X 6" X 4"	E051664	RJB664	5133710	E987R CAR	10
	6" X 6" X 6"	E051666	RJB666	5133711	E989RRR UPC	5
	8" X 8" X 4"	E051884	RJB884	5133712	E989N CAR	5
	8" X 8" X 7"	E051887	RJB887	5133708	E989SSX UPC	4
	12" X 12" X 4"	E05112124	RJB12124	5133714	E989UUN	2
	12" X 12" X 6"	E05112126	RJB12126	5133713	E989R UPC	2
	12" X 12" X 8"	E05112128	RJB12128			3
JUNCTION BOX ADAPTERS						
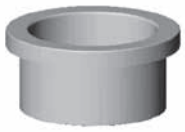	1/2"	E059050	RJBA10	5133715	E996D	100
	3/4"	E059075	RJBA15	5133716	E996E	100
	1"	E059100	RJBA20	5133717	E996F	100
	1 1/4"	E059125	RJBA25	5133718	E996G	50
	1 1/2"	E059150	RJBA30	5133719	E996H	50
	2"	E059200	RJBA35	5133720	E996J	25
	2 1/2"	E059250	RJBA40	5133721	E996K CAR	10
	3"	E059300	RJBA45	5133722	E996L	10
	3 1/2"	E059350	RJBA50	5133723		10
	4"	E059400	RJBA55	5133724	E996N	10

Rigid PVC Conduit Fittings

Item	Size in Inches	Part Number	Reference Royal	Reference CANTEX	Reference Thomas & Betts - Carlon	Carton Qty
METER RISER KIT						
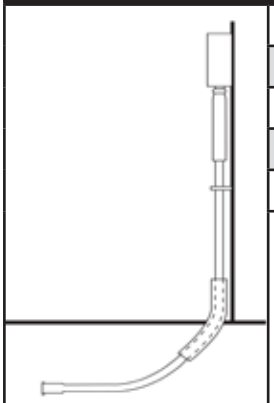	1 1/4″	E092125	-----	-----	-----	1
	1 1/2″	E092150	-----	-----	-----	1
	2″	E092200	-----	-----	-----	1
	2 1/2″	E092250	-----	-----	-----	1
	3″	E092300	-----	-----	-----	1
SLIP METER RISER						
	2″	E093200	-----	5144028	E954JXX	20
	2 1/2″	E093250	-----	5144030	E954KXX	15
	3″	E093300	-----	5144043	E954LXX	10
	4″	E093400	-----	5144027	E954NXX	5
DUCT - INTERMEDIATE VERTICAL LOCK SPACER						
	2 X 1 1/2″	IS2015	IS2015	-----	-----	350
	2 X 2″	IS2020	IS2020	-----	-----	300
	2 X 3″	IS2030	IS2030	-----	-----	200
	3 X 1 1/2″	IS3015	IS3015	-----	-----	225
	3 X 2″	IS3020	IS3020	-----	-----	200
	3 X 3″	IS3030	IS3030	-----	-----	125
	4 X 1 ″	IS4010	IS4010	-----	-----	200
	4 X 1 1/2″	IS4015	IS4015	-----	-----	150
	4 X 2″	IS4020	IS4020	-----	-----	125
	4 X 3″	IS4030	IS4030	-----	-----	90
	5 X 1 1/2″	IS5015	IS5015	-----	-----	100
	5 X 2″	IS5020	IS5020	-----	-----	100
	5 X 3″	IS5030	IS5030	-----	-----	80
	6 X 1 1/2″	IS6015	IS6015	-----	-----	100
	6 X 2″	IS6020	IS6020	-----	-----	90
	6 X 3″	IS6030	IS6030	-----	-----	70
	8 X 1 1/2″	IS8015	-----	-----	-----	60
	8 X 2″	IS8020	-----	-----	-----	60

Rigid PVC Conduit Fittings

Item	Size in Inches	Part Number	Reference Royal	Reference CANTEX	Reference Thomas & Betts - Carlon	Carton Qty
DUCT - BASE VERTICAL LOCK SPACER						
	2 X 1 1/2"	BS2015	BS2015	-----	-----	250
	2 X 2"	BS2020	BS2020	-----	-----	225
	2 X 3"	BS2030	BS2030	-----	-----	225
	3 X 1 1/2"	BS3015	BS3015	-----	-----	175
	3 X 2"	BS3020	BS3020	-----	-----	155
	3 X 3"	BS3030	BS3030	-----	-----	150
	4 X 1 "	BS4010	BS4010	-----	-----	175
	4 X 1 1/2"	BS4015	BS4015	-----	-----	140
	4 X 2"	BS4020	BS4020	-----	-----	140
	4 X 3"	BS4030	BS4030	-----	-----	120
	5 X 1 1/2"	BS5015	BS5015	-----	-----	120
	5 X 2"	BS5020	BS5020	-----	-----	120
	5 X 3"	BS5030	BS5030	-----	-----	100
	6 X 1 1/2"	BS6015	BS6015	-----	-----	100
	6 X 2"	BS6020	BS6020	-----	-----	100
	6 X 3"	BS6030	BS6030	-----	-----	95
	8 X 1 1/2"	BS8015	-----	-----	-----	50
	8 X 2"	BS8020	-----	-----	-----	50
UNIVERSAL PLUG W/PULLING EYE						
	2"	E091200	PLUG02	5315258	P258JT	70
	3"	E091300	PLUG03	5315260	P258LT	45
	4"	E091400	PLUG04	5315262	P258NT	80
	5"	E091500	PLUG05	5315263	P258PT	45
	6"	E091600	PLUG06	5315264	P258RT	35
ECOVOC LOW VOC / CLEAR CEMENT						
	PINT	RVOC475	RVOC475	7210612	VC9963	12
	QUART	RVOC950ML	RVOC950ML	7210613	VC9962	12

Rigid PVC Conduit Fittings

Item	Size in Inches	Part Number	Reference Royal	Reference CANTEX	Reference Thomas & Betts - Carlon	Carton Qty
VINYL SIDING ELECTRICAL MOUNT						
	7 1/2" X 7 1/2"	10000	-----	-----	-----	10
	7 5/8" X 12"	41000	-----	-----	-----	10
	7 1/2" X 7 3/4"	13000	-----	-----	-----	10
	6" X 4 1/2"	43000	-----	-----	-----	10
	5 1/2" X 7 6/16"	44000	-----	-----	-----	10
	14 1/2" X 19"	42000	-----	-----	-----	1
	7" X 7"	17000	-----	-----	-----	10
SCH 40 STANDARD ELBOWS - 90° ELBOW - PLAIN END						
	1/2"	E018050	REE1090PE	5133823	UA9AD	50
	3/4"	E018075	REE1590PE	5133824	UA9AE	35
	1"	E018100	REE2090PE	5133825	UA9AF	20
	1 1/4"	E018125	REE2590PE	5133826	UA9AG	30
	1 1/2"	E018150	REE3090PE	5133827	UA9AH	30
	2"	E018200	REE3590PE	5133828	UA9AJ	15
	2 1/2"	E018250	REE4090PE	5133829	UA9AK CAR	18
	3"	E018300	REE4590PE	5133830	UA9AL	14
	3 1/2"	E018350	REE5090PE	5133831	UA9AM	12
	4"	E018400	REE5590PE	5133832	UA9AN	10
	5"	E018500	REE6090PE	5133835	UA9AP	1
	6"	E018600	REE6590PE	5133834	UA9AR	1
SCH 40 STANDARD ELBOWS - 45° ELBOW - PLAIN END						
	1/2"	E019050	REE1045PE	5133763	UA7AD	50
	3/4"	E019075	REE1545PE	5133764	UA7AE	25
	1"	E019100	REE2045PE	5133765	UA7AF	20
	1 1/4"	E019125	REE2545PE	5133766	UA7AG	25
	1 1/2"	E019150	REE3045PE	5133767	UA7AH	20
	2"	E019200	REE3545PE	5133768	UA7AJ	10
	2 1/2"	E019250	REE4045PE	5133769	UA7AK	20
	3"	E019300	REE4545PE	5133770	UA7AL CAR	8
	3 1/2"	E019350	REE5045PE	5133771	UA7AM	5
	4"	E019400	REE5545PE	5133772	UA7AN	20
	5"	E019500	REE6045PE	5133773	UA7AP	1
	6"	E019600	REE6545PE	5133774	UA7AR	1

Rigid PVC Conduit Fittings

Item	Size in Inches	Part Number	Reference Royal	Reference CANTEX	Reference Thomas & Betts - Carlon	Carton Qty
SCH 40 STANDARD ELBOWS - 30° ELBOW - PLAIN END						
	1/2″	E020050	REE1030PE	5133755	UA6AD	50
	3/4″	E020075	REE1530PE	5133744	UA6AE	25
	1″	E020100	REE2030PE	5133745	UA6AF	20
	1 1/4″	E020125	REE2530PE	5133746	UA6AG	25
	1 1/2″	E020150	REE3030PE	5133747	UA6AH	50
	2″	E020200	REE3530PE	5133748	UA6AJ	10
	2 1/2″	E020250	REE4030PE	5133749	UA6AK	20
	3″	E020300	REE4530PE	5133750	UA6AL	8
	3 1/2″	E020350	REE5030PE	5133751	UA6AM	5
	4″	E020400	REE5530PE	5133775	UA6AN	20
	5″	E020500	REE6030PE	5133753	UA6AP	1
	6″	E020600	REE6530PE	5133754	UA6AR	1
SCH 40 STANDARD ELBOWS - 22 1/2° ELBOW - PLAIN END						
	1 1/2″	E084150	-----	5134094	UA5AH	20
	2″	E084200	-----	5134067	UA5AJ	10
	2 1/2″	E084250	-----	5134096	UA5AK	20
	3″	E084300	-----	5134068	UA5AL	8
	3 1/2″	E084350	-----	5134095	UA5AM	5
	4″	E084400	-----	5133757	UA5AN	20
	5″	E084500	-----	5134037	UA5AP	1
	6″	E084600	-----	5133901	UA5AR	1
SCH 40 STANDARD ELBOWS - 11 1/4° ELBOW - PLAIN END						
	2″	E087200	-----	-----	UA3AJ	1
	3″	E087300	-----	-----	UA3AL	1
	4″	E087400	-----	-----	UA3AN	1
	5″	E087500	-----	-----	UA3AP	1

Rigid PVC Conduit Fittings

Item	Size in Inches	Part Number	Reference Royal	Reference CANTEX	Reference Thomas & Betts - Carlon	Carton Qty
SCH 40 STANDARD ELBOWS - 90° ELBOW - BELL END						
	1/2″	E021050	REE1090	5233823	UA9ADB	50
	3/4″	E021075	REE1590	5233824	UA9AEB	35
	1″	E021100	REE2090	5233825	UA9AFB	20
	1 1/4″	E021125	REE2590	5233826	UA9AGB	30
	1 1/2″	E021150	REE3090	5233827	UA9AHB	30
	2″	E021200	REE3590	5233828	UA9AJB	15
	2 1/2″	E021250	REE4090	5233829	UA9AKB CAR	18
	3″	E021300	REE4590	5233830	UA9ALB CAR	14
	3 1/2″	E021350	REE5090	5233831	UA9AMB	12
	4″	E021400	REE5590	5233832	UA9ANB	10
	5″	E021500	REE6090	5233835	UA9APB	1
	6″	E021600	REE6590	5233834	UA9ARB	1
SCH 40 STANDARD ELBOWS - 45° ELBOW - BELL EN						
	1/2″	E022050	REE1045	5233763	UA7ADB	50
	3/4″	E022075	REE1545	5233764	UA7AEB	25
	1″	E022100	REE2045	5233765	UA7AFB	20
	1 1/4″	E022125	REE2545	5233766	UA7AGB	25
	1 1/2″	E022150	REE3045	5233767	UA7AHB	20
	2″	E022200	REE3545	5233768	UA7AJB	10
	2 1/2″	E022250	REE4045	5233769	UA7AKB	20
	3″	E022300	REE4545	5233770	UA7ALB	8
	3 1/2″	E022350	REE5045	5233771	UA7AMB	5
	4″	E022400	REE5545	5233772	UA7ANB	20
	5″	E022500	REE6045	5233773	UA7APB	1
	6″	E022600	REE6545	5233774	UA7ARB	1
SCH 40 STANDARD ELBOWS - 30° ELBOW - BELL END						
	1/2″	E072050	REE1030		UA6ADB	50
	3/4″	E072075	REE1530		UA6AEB	35
	1″	E072100	REE2030		UA6AFB	50
	1 1/4″	E072125	REE2530		UA6AGB	30
	1 1/2″	E072150	REE3030		UA6AHB	50
	2″	E072200	REE3530	5233748	UA6AJB	10
	2 1/2″	E072250	REE4030		UA6AKB	10
	3″	E072300	REE4530	5233750	UA6ALB	8
	3 1/2″	E072350	REE5030	5233751	UA6AMB	5
	4″	E072400	REE5530	5233776	UA6ANB	20
	5″	E072500	REE6030	5233753	UA6APB	1
	6″	E072600	REE6530	5233754	UA6ARB	1

Rigid PVC Conduit Fittings

Item	Size in Inches	Part Number	Reference Royal	Reference CANTEX	Reference Thomas & Betts - Carlon	Carton Qty
SCH 80 STANDARD ELBOWS - SCH80 90° ELBOW - PLAIN END						
	1/2″	E085050	-----	5121053	UB9AD	50
	3/4″	E085075	-----	5121054	UB9AE	35
	1″	E085100	-----	5121055	UB9AF	20
	1 1/4″	E085125	-----	5121056	UB9AG	30
	1 1/2″	E085150	-----	5121057	UB9AH	30
	2″	E085200	-----	5121058	UB9AJ	15
	2 1/2″	E085250	-----	5121059	UB9AK CAR	18
	3″	E085300	-----	5121060	UB9AL CAR	14
	4″	E085400	-----	5121061	UB9AN	10
	5″	E085500	-----	5121062	UB9AP	1
	6″	E085600	-----	5121063	UB9AR	1
SCH 80 STANDARD ELBOWS - SCH80 45° ELBOW - PLAIN END						
	1/2″	E086050	-----	5121003	UB7AD	50
	3/4″	E086075	-----	5121004	UB7AE UPC	25
	1″	E086100	-----	5121005	UB7AF UPC	20
	1 1/4″	E086125	-----	5121006	UB7AG	25
	1 1/2″	E086150	-----	5121007	UB7AH	20
	2″	E086200	-----	5121008	UB7AJ UPC	10
	2 1/2″	E086250	-----	5121009	UB7AK	20
	3″	E086300	-----	5121010	UB7AL	8
	4″	E086400	-----	5121011	UB7AN	20
	5″	E086500	-----	5121012	UB7AP	1
	6″	E086600	-----	5121013	UB7AR	1
SCH. 40 SPECIAL RADIUS ELBOW PLAIN END - 90° 24″ RADIUS						
	1″	E07510024	-----	5133859	UA9DF	1
	1 1/4″	E07512524	-----	5133883	UA9DG	1
	1 1/2″	E07515024	-----	5133873	UA9DH	1
	2″	E07520024	-----	5133836	UA9DJ	1
	2 1/2″	E07525024	-----	5133847	UA9DK	1
	3″	E07530024	-----	5133837	UA9DL	1
	3 1/2″	E07535024	-----	5133893	UA9DM	1
	4″	E07540024	-----	5133822	UA9DN	1
	5″	E07550024	-----	-----	-----	1
	6″	E07560024	-----	-----	-----	1

Rigid PVC Conduit Fittings

Item	Size in Inches	Part Number	Reference Royal	Reference CANTEX	Reference Thomas & Betts - Carlon	Carton Qty
SCH. 40 SPECIAL RADIUS ELBOW PLAIN END - 90° 36" RADIUS						
	1"	E07510036	-----	5133852	UA9FF	1
	1 1/4"	E07512536	-----	5133884	UA9FG	1
	1 1/2"	E07515036	-----	5133866	UA9FH	1
	2"	E07520036	-----	5133848	UA9FJ UPC	1
	2 1/2"	E07525036	-----	5133857	UA9FK UPC	1
	3"	E07530036	-----	5133820	UA9FL	1
	3 1/2"	E07535036	-----	5133818	UA9FM	1
	4"	E07540036	-----	5133821	UA9FN	1
	5"	E07550036	-----	5133841	UA9FP	1
	6"	E07560036	-----	5133877	UA9FR	1
SCH. 40 SPECIAL RADIUS ELBOW PLAIN END - 90° 48" RADIUS						
	1"	E07510048	-----	5133864	UA9HF	1
	1 1/4"	E07512548	-----	5133871	UA9HG	1
	1 1/2"	E07515048	-----	5133865	UA9HH	1
	2"	E07520048	-----	5133876	UA9HJ	1
	2 1/2"	E07525048	-----	5133849	UA9HK	1
	3"	E07530048	-----	5133817	UA9HL	1
	3 1/2"	E07535048	-----	5133892	UA9HM	1
	4"	E07540048	-----	5133843	UA9HN	1
	5"	E07550048	-----	5133842	UA9HP	1
	6"	E07560048	-----	5133816	UA9HR	1
SCH. 40 SPECIAL RADIUS ELBOW PLAIN END - 45° 24" RADIUS						
	1"	E07610024	-----	5133875	UA7DF	1
	1 1/4"	E07612524	-----	5133941	UA7DG	1
	1 1/2"	E07615024	-----	5133874	UA7DH	1
	2"	E07620024	-----	5133815	UA7DJ	1
	2 1/2"	E07625024	-----	5133935	UA7DK	1
	3"	E07630024	-----	5133800	UA7DL	1
	3 1/2"	E07635024	-----	5133802	UA7DM	1
	4"	E07640024	-----	5133812	UA7DN	1
	5"	E07650024	-----	-----	-----	1
	6"	E07660024	-----	-----	-----	1

Rigid PVC Conduit Fittings

Item	Size in Inches	Part Number	Reference Royal	Reference CANTEX	Reference Thomas & Betts - Carlon	Carton Qty
SCH. 40 SPECIAL RADIUS ELBOW PLAIN END - 45° 36" RADIUS						
	1"	E07610036	------	5133919	UA7FF	1
	1 1/4"	E07612536	------	5133956	UA7FG	1
	1 1/2"	E07615036	------	5133810	UA7FH	1
	2"	E07620036	------	5133778	UA7FJ	1
	2 1/2"	E07625036	------	5133801	UA7FK	1
	3"	E07630036	------	5133779	UA7FL	1
	3 1/2"	E07635036	------	5133939	UA7FM	1
	4"	E07640036	------	5133777	UA7FN	1
	5"	E07650036	------	5133780	UA7FP	1
	6"	E07660036	------	5133880	UA7FR	1
SCH. 40 SPECIAL RADIUS ELBOW PLAIN END - 45° 48" RADIUS						
	1"	E07610048	------	5133940	UA7HF	1
	1 1/4"	E07612548	------	5133942	UA7HG	1
	1 1/2"	E07615048	------	5133811	UA7HH	1
	2"	E07620048	------	5133798	UA7HJ	1
	2 1/2"	E07625048	------	5134010	UA7HK	1
	3"	E07630048	------	5133781	------	1
	3 1/2"	E07635048	------	5133979	------	1
	4"	E07640048	------	5133776	UA7HN	1
	5"	E07650048	------	5133814	UA7HP	1
	6"	E07660048	------	5133813	UA7HR	1
SCH. 40 SPECIAL RADIUS ELBOW BELLED - 90° 24" RADIUS						
	2"	E07920024	------	5133924	UA9DJB UPC	1
	2 1/2"	E07925024	------	5233847	UA9DKB UPC	1
	3"	E07930024	------	5233837	UA9DLB UPC	1
	3 1/2"	E07935024	------	5233893	UA9DMB	1
	4"	E07940024	------	5233822	UA9DNB	1
SCH. 40 SPECIAL RADIUS ELBOW BELLED - 90° 36" RADIUS						
	2"	E07920036	------	5233848	UA9FJB	1
	2 1/2"	E07925036	------	5233857	UA9FKB	1
	3"	E07930036	------	5233930	UA9FLB	1
	3 1/2"	E07935036	------	5233818	UA9FMB	1
	4"	E07940036	------	5233842	UA9FNB	1
	5"	E07950036	------	5233841	UA9FPB	1
	6"	E07960036	------	5233877	UA9FRB	1

Rigid PVC Conduit Fittings

Item	Size in Inches	Part Number	Reference Royal	Reference CANTEX	Reference Thomas & Betts - Carlon	Carton Qty
SCH. 40 SPECIAL RADIUS ELBOW BELLED - 90° 48" RADIUS						
	2"	E07920048	-----	5233876	UA9HJB	1
	2 1/2"	E07925048	-----	5233849	UA9HKB	1
	3"	E07930048	-----	5233817	UA9HLB	1
	3 1/2"	E07935048	-----	5233892	-----	1
	4"	E07940048	-----	5233843	UA9HNB	1
	5"	E07950048	-----	5233868	UA9HPB	1
	6"	E07960048	-----	5233816	UA9HRB	1
SCH. 40 SPECIAL RADIUS ELBOW BELLED - 45° 24" RADIUS						
	2"	E08020024	-----	5233815	UA7DJB	1
	2 1/2"	E08025024	-----	5233935	UA7DKB	1
	3"	E08030024	-----	5233800	UA7DLB	1
	3 1/2"	E08035024	-----	5233802	-----	1
	4"	E08040024	-----	5233812	UA7DNB	1
SCH. 40 SPECIAL RADIUS ELBOW BELLED - 45° 36" RADIUS						
	2"	E08020036	-----	5233778	UA7FJB	1
	2 1/2"	E08025036	-----	5233801	UA7FKB	1
	3"	E08030036	-----	5233779	UA7FLB	1
	3 1/2"	E08035036	-----	5233939	-----	1
	4"	E08040036	-----	5233777	UA7FNB	1
	5"	E08050036	-----	5233780	UA7FPB	1
	6"	E08060036	-----	5133894	UA7FRB	1
SCH. 40 SPECIAL RADIUS ELBOW BELLED - 45° 48" RADIUS						
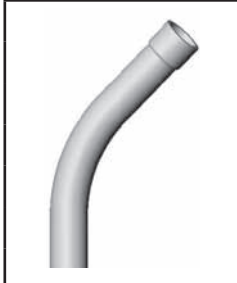	2"	E08020048	-----	5133759	UA7HJB	1
	2 1/2"	E08025048	-----	5233785	-----	1
	3"	E08030048	-----	5233782	UA7HLB	1
	3 1/2"	E08035048	-----	5233943	-----	1
	4"	E08040048	-----	5133761	UA7HNB	1
	5"	E08050048	-----	5233781	UA7HPB	1
	6"	E08060048	-----	5233813	UA7HRB	1
SCH. 80 SPECIAL RADIUS ELBOW PLAIN END - 90° 24" RADIUS						
	1"	E07710024	-----	5121018	UB9DF	1
	1 1/4"	E07712524	-----	5119824	UB9DG	1
	1 1/2"	E07715024	-----	5121015	UB0DH UPC	1
	2"	E07720024	-----	5121019	UB9DJ UPC	1
	2 1/2"	E07725024	-----	5121028	UB9DK UPC	1
	3"	E07730024	-----	5121020	UB9DL	1
	4"	E07740024	-----	5121022	UB9DN	1

Rigid PVC Conduit Fittings

Item	Size in Inches	Part Number	Reference Royal	Reference CANTEX	Reference Thomas & Betts - Carlon	Carton Qty
SCH. 80 SPECIAL RADIUS ELBOW PLAIN END - 90° 36" RADIUS						
	1"	E07710036		5121080	UB9FF	1
	1 1/4"	E07712536		5121084	UB9FG	1
	1 1/2"	E07715036		5121100	UB9FH	1
	2"	E07720036		5121021	UB9FJ	1
	2 1/2"	E07725036		5121016	UB9FK	1
	3"	E07730036		5121081	UB9FL	1
	4"	E07740036		5121023	UB9FN	1
	5"	E07750036		5121083	UB9FP	1
	6"	E07760036		5121073	UB9FR	1
SCH. 80 SPECIAL RADIUS ELBOW PLAIN END - 90° 48" RADIUS						
	1"	E07710048		5121065	UB9HF	1
	1 1/4"	E07712548		5136510	UB9HG	1
	1 1/2"	E07715048		5121076	UB9HH	1
	2"	E07720048		5121075	UB9HJ	1
	2 1/2"	E07725048		5121030	UB9HK	1
	3"	E07730048		5121082	UB9HL	1
	4"	E07740048		5121024	UB9HN	1
	5"	E07750048		5121025	UB9HP	1
SCH. 80 SPECIAL RADIUS ELBOW PLAIN END						
	1"	E07810024		5136500	UB7DF	1
	1 1/4"	E07812524		5136512	UB7DG	1
	1 1/2"	E07815024		5163533	UB7DH	1
	2"	E07820024		5121101	UB7DJ	1
	2 1/2"	E07825024		5121943	UB7DK	1
	3"	E07830024		5121014	UB7DL	1
	4"	E07840024		5121089	UB7DN	1
SCH. 80 SPECIAL RADIUS ELBOW PLAIN END						
	1"	E07810036		5136502		1
	1 1/4"	E07812536		5136514	UB7FG	1
	1 1/2"	E07815036		5136533	UB7FH	1
	2"	E07820036		5121098	UB7FJ	1
	2 1/2"	E07825036		5121150	UB7FK	1
	3"	E07830036		5121077	UB7FL	1
	4"	E07840036		5119821	UB7FN	1
	5"	E07850036		5119820	UB7FP	1
	6"	E07860036		5121072	UB7FR	1

Rigid PVC Conduit Fittings

Item	Size in Inches	Part Number	Reference Royal	Reference CANTEX	Reference Thomas & Betts - Carlon	Carton Qty
SCH. 80 SPECIAL RADIUS ELBOW PLAIN END - 45° 48" RADIUS						
	1"	E07810048	-----	5136503	UB7HF	1
	1 1/4"	E07812548	-----	5136515	UB7HG	1
	1 1/2"	E07815048	-----	5136534	-----	1
	2"	E07820048	-----	5121093	UB7HJ	1
	2 1/2"	E07825048	-----	5136563	-----	1
	3"	E07830048	-----	5121078	UB7HL	1
	4"	E07840048	-----	5121091	UB7HN	1
	5"	E07850048	-----	5121948	UB7HP	1
SCH. 80 SPECIAL RADIUS ELBOW BELLED - 90° 24" RADIUS						
	1"	E08210024	-----	-----	-----	1
	1 1/4"	E08212524	-----	-----	-----	1
	1 1/2"	E08215024	-----	-----	-----	1
	2"	E08220024	-----	-----	UB9DJB	1
	2 1/2"	E08225024	-----	-----	UB9DKB	1
	3"	E08230024	-----	-----	UB9DLB	1
	4"	E08240024	-----	-----	-----	1
SCH. 80 SPECIAL RADIUS ELBOW BELLED - 90° 36" RADIUS						
	1"	E08210036	-----	-----	-----	1
	1 1/4"	E08212536	-----	-----	-----	1
	1 1/2"	E08215036	-----	-----	-----	1
	2"	E08220036	-----	-----	-----	1
	2 1/2"	E08225036	-----	-----	UB9FKB	1
	3"	E08230036	-----	-----	UB9FLB	1
	4"	E08240036	-----	-----	UB9FNB	1
	5"	E08250036	-----	-----	-----	1
	6"	E08260036	-----	-----	-----	1
SCH. 80 SPECIAL RADIUS ELBOW BELLED - 90° 48" RADIUS						
	1"	E08210048	-----	-----	-----	1
	1 1/4"	E08212548	-----	-----	-----	1
	1 1/2"	E08215048	-----	-----	-----	1
	2"	E08220048	-----	-----	-----	1
	2 1/2"	E08225048	-----	-----	-----	1
	3"	E08230048	-----	-----	-----	1
	4"	E08240048	-----	-----	UB9HNB	1
	5"	E08250048	-----	-----	-----	1

Rigid PVC Conduit Fittings

Item	Size in Inches	Part Number	Reference Royal	Reference CANTEX	Reference Thomas & Betts - Carlon	Carton Qty
SCH. 80 SPECIAL RADIUS ELBOW BELLED - 45° 24" RADIUS						
	1"	E08310024	-----	-----	-----	1
	1 1/4"	E08312524	-----	-----	-----	1
	1 1/2"	E08315024	-----	-----	-----	1
	2"	E08320024	-----	-----	-----	1
	2 1/2"	E08325024	-----	-----	-----	1
	3"	E08330024	-----	-----	-----	1
	4"	E08340024	-----	-----	-----	1
SCH. 80 SPECIAL RADIUS ELBOW BELLED - 45° 36" RADIUS						
	1"	E08310036	-----	-----	-----	1
	1 1/4"	E08312536	-----	-----	-----	1
	1 1/2"	E08315036	-----	-----	-----	1
	2"	E08320036	-----	-----	-----	1
	2 1/2"	E08325036	-----	-----	-----	1
	3"	E08330036	-----	-----	-----	1
	4"	E08340036	-----	-----	-----	1
	5"	E08350036	-----	-----	-----	1
	6"	E08360036	-----	-----	-----	1
SCH. 80 SPECIAL RADIUS ELBOW BELLED - 45° 48" RADIUS						
	1"	E08310048	-----	-----	-----	1
	1 1/4"	E08312548	-----	-----	-----	1
	1 1/2"	E08315048	-----	-----	-----	1
	2"	E08320048	-----	-----	-----	1
	2 1/2"	E08325048	-----	-----	-----	1
	3"	E08330048	-----	-----	-----	1
	4"	E08340048	-----	-----	-----	1
	5"	E08350048	-----	-----	-----	1

Rigid PVC Conduit Fittings

With Brass Fasteners

Item	Size in Inches	Part Number	Reference Royal	Reference CANTEX	Reference Thomas & Betts - Carlon	Carton Qty
BRASS FASTENER PRODUCTS - ACCESS FITTING - TYPE LB						
	1/2″	E533050	RSLB10S	-----	-----	25
	3/4″	E533075	RSLB20S	-----	-----	25
	1″	E533100	RSLB30S	-----	-----	15
	1 1/4″	E533125	RSLB40S	-----	-----	20
	1 1/2″	E533150	RSLB50S	-----	-----	10
	2″	E533200	RSLB60S	-----	-----	15
	2 1/2″	E533250	RSLB70S	-----	-----	5
	3″	E533300	RSLB80S	-----	-----	5
	3 1/2″	E533350	RSLB90S	-----	-----	5
	4″	E533400	RSLB100S	-----	-----	5
BRASS FASTENER PRODUCTS - ACCESS FITTING - TYPE C						
	1/2″	E532050	RSC10S	-----	-----	30
	3/4″	E532075	RSC20S	-----	-----	20
	1″	E532100	RSC30S	-----	-----	15
	1 1/4″	E532125	RSC40S	-----	-----	15
	1 1/2″	E532150	RSC50S	-----	-----	10
	2″	E532200	RSC60S	-----	-----	15
	2 1/2″	E532250	RSC70S	-----	-----	4
	3″	E532300	RSC80S	-----	-----	4
	3 1/2″	E532350	RSC90S	-----	-----	4
	4″	E532400	RSC100S	-----	-----	4
BRASS FASTENER PRODUCTS - ACCESS FITTING - TYPE LL						
	1/2″	E534050	RSLL10S	-----	-----	25
	3/4″	E534075	RSLL20S	-----	-----	20
	1″	E534100	RSLL30S	-----	-----	15
	1 1/4″	E534125	RSLL40S	-----	-----	10
	1 1/2″	E534150	RSLL50S	-----	-----	10
	2″	E534200	RSLL60S	-----	-----	10
	2 1/2″	E534250	RSLL70S	-----	-----	4
	3″	E534300	RSLL80S	-----	-----	4
	3 1/2″	E534350	RSLL90S	-----	-----	5
	4″	E534400	RSLL100S	-----	-----	5

Rigid PVC Conduit Fittings

With Brass Fasteners

Item	Size in Inches	Part Number	Reference Royal	Reference CANTEX	Reference Thomas & Betts - Carlon	Carton Qty
BRASS FASTENER PRODUCTS - ACCESS FITTING - TYPE LR						
	1/2″	E535050	RSLR10S	-----	-----	25
	3/4″	E535075	RSLR20S	-----	-----	20
	1″	E535100	RSLR30S	-----	-----	15
	1 1/4″	E535125	RSLR40S	-----	-----	10
	1 1/2″	E535150	RSLR50S	-----	-----	10
	2″	E535200	RSLR60S	-----	-----	10
	2 1/2″	E535250	RSLR70S	-----	-----	4
	3″	E535300	RSLR80S	-----	-----	4
	3 1/2″	E535350	RSLR90S	-----	-----	5
	4″	E535400	RSLR100S	-----	-----	5
BRASS FASTENER PRODUCTS - ACCESS FITTING - TYPE E						
	1/2″	E536050	RSE10S	-----	-----	30
	3/4″	E536075	RSE20S	-----	-----	20
	1″	E536100	RSE30S	-----	-----	15
	1 1/4″	E536125	RSE40S	-----	-----	20
	1 1/2″	E536150	RSE50S	-----	-----	10
	2″	E536200	RSE60S	-----	-----	15
	2 1/2″	E536250	RSE70S	-----	-----	4
	3″	E536300	RSE80S	-----	-----	4
	3 1/2″	E536350	RSE90S	-----	-----	4
	4″	E536400	RSE100S	-----	-----	4
BRASS FASTENER PRODUCTS - ACCESS FITTING - TYPE T						
	1/2″	E537050	RST10S	-----	-----	30
	3/4″	E537075	RST20S	-----	-----	20
	1″	E537100	RST30S	-----	-----	25
	1 1/4″	E537125	RST40S	-----	-----	15
	1 1/2″	E537150	RST50S	-----	-----	10
	2″	E537200	RST60S	-----	-----	10
	2 1/2″	E537250	RST70S	-----	-----	4
	3″	E537300	RST80S	-----	-----	4
	3 1/2″	E537350	RST90S	-----	-----	4
	4″	E537400	RST100S	-----	-----	4
BRASS FASTENER PRODUCTS - ACCESS FITTING - TYPE TB						
	1/2″	E569050	RSTB10S	-----	-----	30
	3/4″	E569075	RSTB20S	-----	-----	20
	1″	E569100	RSTB30S	-----	-----	10
	1 1/4″	E569125	RSTB40S	-----	-----	10

Rigid PVC Conduit Fittings

With Brass Fasteners

Item	Size in Inches	Part Number	Reference Royal	Reference CANTEX	Reference Thomas & Betts - Carlon	Carton Qty
BRASS FASTENER PRODUCTS - JUNCTION BOX WITH GASKET						
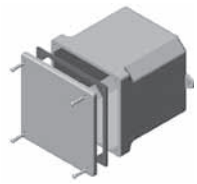	4" X 4" X 2"	E551442	RJB442	------	------	15
	4" X 4" X 4"	E551444	RJB444	------	------	10
	4" X 4" X 6"	E551446	RJB446	------	------	8
	5" X 5" X 2"	E551552	RJB552	------	------	12
	6" X 6" X 4"	E551664	RJB664	------	------	15
	6" X 6" X 6"	E551666	RJB666	------	------	4
	8" X 8" X 4"	E551884	RJB884	------	------	4
	8" X 8" X 7"	E551887	RJB887	------	------	4
	12" X 12" X 4"	E55112124	RJB12124	------	------	2
	12" X 12" X 6"	E55112126	RJB12126	------	------	4
	12" X 12" X 8"	E55112128	RJB12128	------	------	3
BRASS FASTENER PRODUCTS - SINGLE GANG BOX - F SERIES						
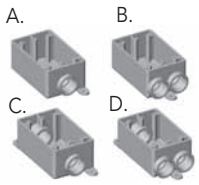	A. 1/2" FS	E542001	RFS10	------	------	10
	A. 3/4" FS	E542002	RFS15	------	------	10
	B. 1/2" FSS	E542003	RFSS10	------	------	10
	B. 3/4" FSS	E542004	RFSS15	------	------	10
	C. 1/2" FSC	E542005	RFSC10	------	------	10
	C. 3/4" FSC	E542006	RFSC15	------	------	10
	D. 1/2" FSCC	E542007	RFSCC10	------	------	10
	D. 3/4" FSCC	E542008	RFSCC15	------	------	10
BRASS FASTENER PRODUCTS - SINGLE GANG DEEP BOX - FD SERIES						
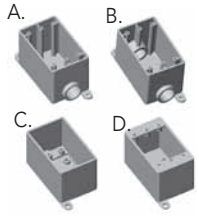	A. 1/2" FDS	E543001	RFDS10	------	------	10
	A. 3/4" FDS	E543002	RFDS15	------	------	10
	A. 1" FDS	E543003	RFDS20	------	------	10
	B. 1/2" FDC	E543004	RFDC10	------	------	10
	B. 3/4" FDC	E543005	RFDC15	------	------	10
	B. 1" FDC	E543006	RFDC20	------	------	10
	C. BLANK	E543007	RFD	------	------	10
BRASS FASTENER PRODUCTS - DOUBLE GANG BOX - F SERIES						
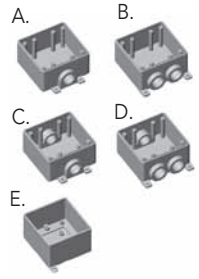	A. 1/2" FS	E541001	------	------	------	10
	A. 3/4" FS	E541002	------	------	------	10
	A. 1" FS	E541003	------	------	------	10
	B. 1/2" FSS	E541004	------	------	------	10
	B. 3/4" FSS	E541005	------	------	------	10
	B. 1" FSS	E541006	------	------	------	10
	C. 1/2" FSC	E541007	------	------	------	10
	C. 3/4" FSC	E541008	------	------	------	10
	C. 1" FSC	E541009	------	------	------	10
	D. 1/2" FSCC	E541011	------	------	------	10
	D. 3/4" FSCC	E541012	------	------	------	10
	D. 1" FSCC	E541013	------	------	------	10
	E. BLANK	E541010	------	------	------	10

Rigid PVC Conduit Fittings

With Brass Fasteners

Item	Size in Inches	Part Number	Reference Royal	Reference CANTEX	Reference Thomas & Betts - Carlon	Carton Qty
BRASS FASTENER PRODUCTS - SINGLE GANG COVER PLATE - F SERIES						
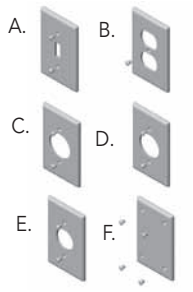	A. TOGGLE	E546002	RTSC15/10	------	------	100
	B. DUPLEX	E546001	RDRC15/10	------	------	100
	C. 15 AMP	E546004	R20RC15/10	------	------	100
	D. 20 AMP	E546003	R20 3RC15/10	------	------	100
	E. 30 AMP	E546005	R30 3RC15/10	------	------	100
	F. BLANK W/ GASKET	E546006	RBRC15/10	------	------	100
BRASS FASTENER PRODUCTS - DOUBLE GANG WEATHERPROOF COVER PLATE						
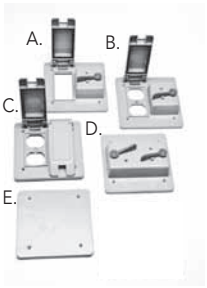	B. GFI & TOGGLE	E549005	------	------	------	10
	C. DUPLEX & TOGGLE	E549006	------	------	------	10
	D. DOUBLE DU PLEX	E549007	------	------	------	10
	E. TOGGLE	E549008	------	------	------	10
	F. BLANK	E549009	------	------	------	25
BRASS FASTENER PRODUCTS - SINGLE GANG WEATHERPROOF COVER PLATE						
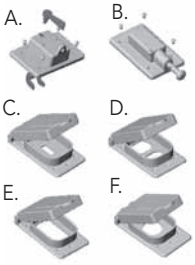	A. TOGGLE S/ COVER	E547002	RVSC15/10	------	------	20
	B. PLUNGER S/ COVER	E547008	RVPT15/10	------	------	20
	C. TOGGLE	E547009	RWTG15/10	------	------	20
	D. DUPLEX	E547001	RWDR15/10	------	------	20
	D. DUPLEX WHITE	E547010	RWDR15/10W	------	------	20
	E. GROUND FAULT	E547007	RWGF15/10	------	------	20
	E. GROUND FAULT WHITE	E547011	RWGF15/10W	------	------	20
	F. 15 AMP	E547003	RWTL15	------	------	20
	F. 20 AMP	E547004	RWTL20	------	------	20
	F. 30 AMP	E547005	RWTL30	------	------	20
	F. 50 AMP	E547006	RWTL50	------	------	20

ENT - Tubing

Electrical Non-Metallic Tubing

Item	Size in Inches	Part Number	Reference Royal	Reference CANTEX	Reference Thomas & Betts - Carlon	Carton Qty
COILS - BLUE ENT TUBING						
						FEET
	1/2	EC005200BL	-----	A51AEB1	12005 200	200
	3/4	EC007100BL	-----	A51AGA1	12007 100	100
	1	EC010100BL	-----	A51BAA1	12008 100	100
	1 1/4	EC012350BL	-----	-----	-----	350
	1 1/2	EC015300BL	-----	-----	-----	300
	2	EC020250BL	-----	-----	-----	250
COILS - GREY ENT TUBING						
						FEET
	1/2	EC005370	EC005370	-----	-----	370
	3/4	EC007240	EC007240	-----	-----	240
	1	EC010160	EC010160	-----	-----	160
	1 1/4	EC012500	EC012500	-----	-----	500
	1 1/2	EC015300	EC015300	-----	-----	300
	2	EC020225	EC020225	-----	-----	225
REELS - BLUE ENT TUBING						
						FEET
	1/2	ER 0051500BL	-----	A51AEQ1	12005AK 001	1,500
	3/4	ER 0071000BL	-----	A51AGJ1	12007AA 001	1,000
	1	ER 0101000BL	-----	A51BAJ1	-----	1,000
	1 1/4	ER 0121000BL	-----	-----	-----	1,000
	1 1/2	ER015750BL	-----	-----	12010 750	750
	2	ER020500BL	-----	-----	12011 500	500

ENT - Tubing

Electrical Non-Metallic Tubing

Item	Size in Inches	Part Number	Reference Royal	Reference CANTEX	Reference Thomas & Betts - Carlon	Carton Qty
REELS - GREY ENT TUBING						
						FEET
	1/2	ER0052000	ER0052000	-----	-----	2,000
	3/4	ER0071500	ER0071500	-----	-----	1,500
	1	ER0101000	ER0101000	-----	-----	1,000
	1 1/4	ER0121000	ER0121000	-----	-----	1,000
	1 1/2	ER015750	ER015750	-----	-----	750
	2	ER020500	ER020500	-----	-----	500
STRAIGHT LENGTH - BLUE ENT TUBING						
						EACH
	1/2	ES00510BL	-----	-----	-----	100
	3/4	ES00710BL	-----	-----	-----	100
	1	ES01010BL	-----	-----	-----	100
STRAIGHT LENGTH - GREY ENT TUBING						
					SUPPLIED IN 10 FOOT LENGTHS	
						EACH
	1/2	ES00510	ES00510	-----	-----	100
	3/4	ES00710	ES00710	-----	-----	100
	1	ES01010	ES01010	-----	-----	100

ENT - Fittings

Electrical Non-Metallic Fittings

Item	Size in Inches	Part Number	Reference Royal	Reference CANTEX	Reference Thomas & Betts - Carlon	Carton Qty
ENT COUPLING						
	1/2	RKC10	RKC10	5163380	A240D	150
	3/4	RKC15	RKC15	5163381	A240E	100
	1	RKC20	RKC20	5163382	A240F	50
	1 1/4	RKC25	RKC25	-----	-----	50
	1 1/2	RKC30	RKC30	-----	-----	40
	2	RKC35	RKC35	-----	-----	25
ENT THREADED TERMINAL ADAPTER WITH LOCK NUT						
	1/2	RKTA10	RKTA10	5163415	-----	150
	3/4	RKTA15	RKTA15	5163416	-----	100
	1	RKTA20	RKTA20	5163417	-----	50
	1 1/4	RKTA25	RKTA25	-----	-----	50
	1 1/2	RKTA30	RKTA30	-----	-----	50
	2	RKTA35	RKTA35	-----	-----	25
ENT ADAPTER WITH SET SCREW						
	1/2	RKTC10	RKTC10	-----	A245D	125
	3/4	RKTC15	RKTC15	-----	A245E	100
	1	RKTC20	RKTC20	-----	A245F	50
	1 1/4	RKTC25	RKTC25	-----	-----	50
	1 1/2	RKTC30	RKTC30	-----	-----	40
	2	RKTC35	RKTC35	-----	-----	15
ENT QUICK SNAP TERMINAL ADAPTER						
	1/2	RKTS10	RKTS10	5163405	A253D	150
	3/4	RKTS15	RKTS15	5163406	A253E	100
	1	RKTS20	RKTS20	5163407	A253F	50
ENT CLIP RING						
	1/2	RKR10	RKR10	-----	-----	200†
	3/4	RKR15	RKR15	-----	-----	200†
	1	RKR20	RKR20	-----	-----	200†
	1 1/4	RKR25	RKR25	-----	-----	100*
	1 1/2	RKR30	RKR30	-----	-----	100*
	2	RKR35	RKR35	-----	-----	50^

Rings are net priced per bag as follows: † = 20/bag * = 10/bag ^ = 5/bag

ENT - Fittings

Electrical Non-Metallic Fittings

Item	Size in Inches	Part Number	Reference Royal	Reference CANTEX	Reference Thomas & Betts - Carlon	Carton Qty
HEAVY DUTY LOCK NUT						
	1/2	RLN10	RLN10	-----	-----	200
	3/4	RLN15	RLN15	-----	-----	200
	1	RLN20	RLN20	-----	-----	200
	1 1/4	RLN25	RLN25	-----	-----	200
	1 1/2	RLN30	RLN30	-----	-----	200
	2	RLN35	RLN35	-----	-----	200
STRAIGHT STUBBY (POLYETHYLENE)						
	1/2	RECM10	RECM10	EN050SBY	A210D	150
	3/4	RECM15	RECM15	EN075SBY	A210E	150
	1	RECM20	RECM20	EN100SBY	A210F	200
	1 1/4	RECM25	RECM25	-----	-----	200
45 DEGREE ANGLED FORM STUBBY (POLYETHYLENE)						
	1/2	RKASTB10	RKASTB10	-----	A220D	50
	3/4	RKASTB15	RKASTB15	-----	A220E	50
	1	RKASTB20	RKASTB20	-----	A220F	50
	1 1/4	RKASTB25	RKASTB25	-----	A220G	50
	1 1/2	RKASTB30	RKASTB30	-----	A220H	50
	2	RKASTB35	RKASTB35	-----	A220J	50
TAPERED PLUG (POLYETHYLENE)						
	1/2	RTP10	RTP10	-----	-----	250
	3/4	RTP15	RTP15	-----	-----	100
	1	RTP20	RTP20	-----	-----	100
SLAB BOX EXTENSION						
	1" EXTENSION	RSMBXTENSION	RSMBXTENSION	-----	-----	20

ENT - Fittings

Electrical Non-Metallic Fittings

Item	Size in Inches	Part Number	Reference Royal	Reference CANTEX	Reference Thomas & Betts - Carlon	Carton Qty
ENT SLAB BOX WITH HUB EXTENSIONS AND GREY LID						
	1/2 (8)	RSMB H 10	RSMB H 10	ENS0500C	------	25
	1/2 (4) 3/4 (4)	RSMB H 10 15	RSMB H 10 15	ENS0507C	------	25
	1/2 (4) 3/4 (2)	RSMB H 10 15 20	RSMB H 10 15 20	------	------	25
	1 (2)			------	------	
	1/2 (4) 1 (4)	RSMB H 10 20	RSMB H 10 20	------	------	25
	3/4 (8)	RSMB H 15	RSMB H 15	------	------	25
	3/4 (4) 1 (4)	RSMB H 15 20	RSMB H 15 20	------	------	25
ENT SLAB BOX WITH KNOCKOUTS AND GREY LID						
	1/2 (8)	RSMB 10	RSMB 10	ENS0500K	------	25
	1/2 (4) 3/4 (4)	RSMB 10 15	RSMB 10 15	ENS0507K	------	25
	1/2 (4) 3/4 (2)	RSMB 10 15 20	RSMB 10 15 20	------	------	25
	1 (2)			------	------	
	1/2 (2) 3/4 (4)	RSMB 15 20 10	RSMB 15 20 10	------	------	25
	1 (2)			------	------	
	3/4 (8)	RSMB 15	RSMB 15	------	------	25
ENT SHALLOW SLAB BOX						
	1/2 (8)	RSMBS H 10	RSMBS H 10	------	------	25
	1/2 (4) 3/4 (4)	RSMBS H 10 15	RSMBS H 10 15	------	------	25
	1/2 (4) 3/4 (2)	RSMBS H 10 15 20	RSMBS H 10 15 20	------	------	25
	1 (2)			------	------	
	1/2 (4) 1 (4)	RSMBS H 10 20	RSMBS H 10 20	------	------	25
	3/4 (8)	RSMBS H 15	RSMBS H 15	------	------	25
	3/4 (4) 1 (4)	RSMBS H 15 20	RSMBS H 15 20	------	------	25
ENT ISOLATOR MODULE SLAB BOX						
	1/2 (8)	RSMB 10 IMB	RSMB 10 IMB	------	------	20
	1/2 (4) 3/4 (4)	RSMB 10 15 IMB	RSMB 10 15 IMB	------	------	20
	1/2 (4) 3/4 (2)	RSMB 10 15 20 IMB	RSMB 10 15 20 IMB	------	------	20
	1 (2)			------	------	
	1/2 (4) 1 (4)	RSMB 10 20 IMB	RSMB 10 20 IMB	------	------	20
	3/4 (8)	RSMB 15 IMB	RSMB 15 IMB	------	------	20
	3/4 (4) 1 (4)	RSMB 15 20 IMB	RSMB 15 20 IMB	------	------	20

ENT - Fittings

Electrical Non-Metallic Fittings

Item	Size in Inches	Part Number	Reference Royal	Reference CANTEX	Reference Thomas & Betts - Carlon	Carton Qty
ENT SHALLOW SINGLE GANG CONCRETE WALL BOX						
	1/2	RSVSB H 10	RSVSB H 10	------	------	70
	3/4	RSVSB H 15	RSVSB H 15	------	------	70
	1	RSVSB H 20	RSVSB H 20	------	------	70
ENT DEEP SINGLE GANG CONCRETE WALL BOX						
	1/2 (8)	RSVDB H 10	RSVDB H 10	------	------	25
	1/2 (4) 3/4 (4)	RSVDB H 10 15	RSVDB H 10 15	------	------	25
	1/2 (4) 3/4 (2)	RSVDB H 10 15 20	RSVDB H 10 15 20	------	------	25
	1 (2)					
	1/2 (4) 1 (4)	RSVDB H 10 20	RSVDB H 10 20	------	------	25
	3/4 (8)	RSVDB H 15	RSVDB H 15	------	------	25

PVC Enclosures

Electrical Non-Metallic PVC Enclosures

Item	Size in Inches	Part Number	Reference Royal	Reference CANTEX	Reference Thomas & Betts - Carlon	Weight Each Lbs.
ELECTRICAL TROUGH BOX (SCREW COVER)						
	4 X 4 X 12	ETR040412	ETR040412	-----	-----	3
	4 X 4 X 18	ETR040418	ETR040418	-----	-----	4
	4 X 4 X 24	ETR040424	ETR040424	-----	-----	5
	4 X 4 X 36	ETR040436	ETR040436	-----	-----	8
	4 X 4 X 48	ETR040448	ETR040448	-----	-----	10
	4 X 4 X 60	ETR040460	ETR040460	-----	-----	12
	6 X 6 X 12	ETR060612	ETR060612	-----	-----	5
	6 X 6 X 18	ETR060618	ETR060618	-----	-----	7
	6 X 6 X 24	ETR060624	ETR060624	-----	-----	8
	6 X 6 X 36	ETR060636	ETR060636	-----	-----	11
	6 X 6 X 48	ETR060648	ETR060648	-----	-----	14
	6 X 6 X 60	ETR060660	ETR060660	-----	-----	17
	8 X 8 X 12	ETR080812	ETR080812	-----	-----	7
	8 X 8 X 18	ETR080818	ETR080818	-----	-----	9
	8 X 8 X 24	ETR080824	ETR080824	-----	-----	11
	8 X 8 X 36	ETR080836	ETR080836	-----	-----	15
	8 X 8 X 48	ETR080848	ETR080848	-----	-----	19
	8 X 8 X 60	ETR080860	ETR080860	-----	-----	23
	12 X 12 X 24	ETR121224	ETR121224	-----	-----	27
	12 X 12 X 36	ETR121236	ETR121236	-----	-----	33
	12 X 12 X 48	ETR121248	ETR121248	-----	-----	39
	12 X 12 X 60	ETR121260	ETR121260	-----	-----	45
ELECTRICAL TROUGH BOX (LATCH COVER)						
	4 X 4 X 12	ELC040412	ELC040412	-----	-----	3
	4 X 4 X 18	ELC040418	ELC040418	-----	-----	4
	4 X 4 X 24	ELC040424	ELC040424	-----	-----	5
	4 X 4 X 36	ELC040436	ELC040436	-----	-----	8
	4 X 4 X 48	ELC040448	ELC040448	-----	-----	10
	4 X 4 X 60	ELC040460	ELC040460	-----	-----	12
	6 X 6 X 12	ELC060612	ELC060612	-----	-----	5
	6 X 6 X 18	ELC060618	ELC060618	-----	-----	7
	6 X 6 X 24	ELC060624	ELC060624	-----	-----	8
	6 X 6 X 36	ELC060636	ELC060636	-----	-----	11
	6 X 6 X 48	ELC060648	ELC060648	-----	-----	14
	6 X 6 X 60	ELC060660	ELC060660	-----	-----	17
	8 X 8 X 12	ELC080812	ELC080812	-----	-----	7
	8 X 8 X 18	ELC080818	ELC080818	-----	-----	9
	8 X 8 X 24	ELC080824	ELC080824	-----	-----	11
	8 X 8 X 36	ELC080836	ELC080836	-----	-----	15
	8 X 8 X 48	ELC080848	ELC080848	-----	-----	19
	8 X 8 X 60	ELC080860	ELC080860	-----	-----	23
	12 X 12 X 24	ELC121224	ELC121224	-----	-----	27
	12 X 12 X 36	ELC121236	ELC121236	-----	-----	33
	12 X 12 X 48	ELC121248	ELC121248	-----	-----	39

PVC Enclosures

Electrical Non-Metallic PVC Enclosures





Item	Size in Inches	Part Number	Reference Royal	Reference CANTEX	Reference Thomas & Betts - Carlon	Weight Each Lbs.
LARGE FABRICATED JUNCTION BOXES						
	12 X 10 X 6	E053121006	E053121006	-----	-----	8
	12 X 10 X 8	E053121008	E053121008	-----	-----	9
	12 X 12 X 4	E053121204	E053121204	-----	-----	7
	12 X 12 X 6	E053121206	E053121206	-----	-----	9
	12 X 12 X 8	E053121208	E053121208	-----	-----	10
	12 X 12 X 12	E053121212	E053121212	-----	-----	14
	14 X 12 X 4	E053141204	E053141204	-----	-----	9
	14 X 12 X 6	E053141206	E053141206	-----	-----	10
	14 X 12 X 8	E053141208	E053141208	-----	-----	12
	14 X 14 X 4	E053141404	E053141404	-----	-----	10
	14 X 14 X 6	E053141406	E053141406	-----	-----	12
	14 X 14 X 8	E053141408	E053141408	-----	-----	14
	14 X 14 X 10	E053141410	E053141410	-----	-----	16
	14 X 14 X 14	E053141414	E053141414	-----	-----	19
	16 X 16 X 10	E053161610	E053161610	-----	-----	21
	16 X 16 X 12	E053161612	E053161612	-----	-----	23
	16 X 16 X 16	E053161616	E053161616	-----	-----	22
	18 X 12 X 4	E053181204	E053181204	-----	-----	10
	18 X 12 X 6	E053181206	E053181206	-----	-----	12
	18 X 12 X 8	E053181208	E053181208	-----	-----	13
	18 X 16 X 4	E053181604	E053181604	-----	-----	12
	18 X 16 X 6	E053181606	E053181606	-----	-----	14
	18 X 16 X 8	E053181608	E053181608	-----	-----	16
	18 X 18 X 6	E053181806	E053181806	-----	-----	16
	18 X 18 X 8	E053181808	E053181808	-----	-----	18
	18 X 18 X 10	E053181810	E053181810	-----	-----	20
	18 X 18 X 12	E053181812	E053181812	-----	-----	22
	18 X 18 X 18	E053181818	E053181818	-----	-----	26
	20 X 18 X 8	E053201808	E053201808	-----	-----	20
	20 X 20 X 8	E053202008	E053202008	-----	-----	22
	24 X 18 X 6	E053241806	E053241806	-----	-----	20
	24 X 18 X 8	E053241808	E053241808	-----	-----	22
	24 X 18 X 12	E053241812	E053241812	-----	-----	25
	24 X 20 X 8	E053242008	E053242008	-----	-----	25
	24 X 24 X 6	E053242406	E053242406	-----	-----	25
	24 X 24 X 8	E053242408	E053242408	-----	-----	28
	24 X 24 X 10	E053242410	E053242410	-----	-----	33
	24 X 24 X 12	E053242412	E053242412	-----	-----	35
	24 X 24 X 24	E053242424	E053242424	-----	-----	40
	30 X 24 X 8	E053302408	E053302408	-----	-----	34
	30 X 30 X 10	E053303010	E053303010	-----	-----	39
	30 X 30 X 20	E053303020	E053303020	-----	-----	48
	30 X 30 X 30	E053303030	E053303030	-----	-----	60
	36 X 24 X 8	E053362408	E053362408	-----	-----	39
	36 X 36 X 12	E053363612	E053363612	-----	-----	61
	36 X 36 X 18	E053363618	E053363618	-----	-----	65
	36 X 36 X 20	E053363620	E053363620	-----	-----	67
	36 X 36 X 36	E053363636	E053363636	-----	-----	70
	40 X 40 X 12	E053404012	E053404012	-----	-----	78
	40 X 40 X 20	E053404020	E053404020	-----	-----	88

PVC Enclosures

Electrical Non-Metallic PVC Enclosures

Item	Size in Inches	Part Number	Reference Royal	Reference CANTEX	Reference Thomas & Betts - Carlon	Weight Each Lbs.
ELECTRICAL ENCLOSURES						
	20 X 12 X 8	EBH201208	EBH201208	-----	-----	14
	20 X 16 X 6	EBH201606	EBH201606	-----	-----	16
	20 X 16 X 8	EBH201608	EBH201608	-----	-----	17
	20 X 16 X 10	EBH201610	EBH201610	-----	-----	20
	20 X 16 X 12	EBH201612	EBH201612	-----	-----	22
	20 X 20 X 6	EBH202006	EBH202006	-----	-----	18
	20 X 20 X 8	EBH202008	EBH202008	-----	-----	21
	20 X 20 X 10	EBH2022010	EBH2022010	-----	-----	23
	20 X 24 X 6	EBH2022406	EBH2022406	-----	-----	21
	20 X 24 X 8	EBH202408	EBH202408	-----	-----	24
	24 X 12 X 6	EBH241206	EBH241206	-----	-----	15
	24 X 12 X 8	EBH241208	EBH241208	-----	-----	17
	24 X 12 X 10	EBH241210	EBH241210	-----	-----	19
	24 X 16 X 6	EBH241606	EBH241606	-----	-----	18
	24 X 16 X 8	EBH241608	EBH241608	-----	-----	20
	24 X 20 X 8	EBH242008	EBH242008	-----	-----	24
	24 X 20 X 10	EBH242010	EBH242010	-----	-----	26
	24 X 20 X 12	EBH242012	EBH242012	-----	-----	29
	24 X 20 X 16	EBH242016	EBH242016	-----	-----	34
	24 X 24 X 6	EBH242406	EBH242406	-----	-----	25
	24 X 24 X 8	EBH242408	EBH242408	-----	-----	28
	24 X 24 X 10	EBH242410	EBH242410	-----	-----	30
	24 X 24 X 12	EBH242412	EBH242412	-----	-----	33
	24 X 24 X 16	EBH242416	EBH242416	-----	-----	38
	24 X 30 X 8	EBH243008	EBH243008	-----	-----	33
	30 X 16 X 6	EBH301606	EBH301606	-----	-----	22
	30 X 20 X 6	EBH302006	EBH302006	-----	-----	26
	30 X 20 X 8	EBH302008	EBH302008	-----	-----	29
	30 X 20 X 10	EBH302010	EBH302010	-----	-----	32
	30 X 24 X 6	EBH302406	EBH302406	-----	-----	30
	30 X 24 X 8	EBH302408	EBH302408	-----	-----	33
	30 X 24 X 10	EBH302410	EBH302410	-----	-----	36
	30 X 24 X 12	EBH302412	EBH302412	-----	-----	39
	30 X 24 X 16	EBH302416	EBH302416	-----	-----	45
	30 X 24 X 20	EBH302420	EBH302420	-----	-----	51
	30 X 24 X 24	EBH302424	EBH302424	-----	-----	57
	30 X 30 X 8	EBH303008	EBH303008	-----	-----	39
	30 X 30 X 12	EBH303012	EBH303012	-----	-----	46
	30 X 36 X 8	EBH303608	EBH303608	-----	-----	46
	36 X 24 X 6	EBH362406	EBH362406	-----	-----	35
	36 X 24 X 8	EBH362408	EBH362408	-----	-----	29
	36 X 24 X 10	EBH362410	EBH362410	-----	-----	42

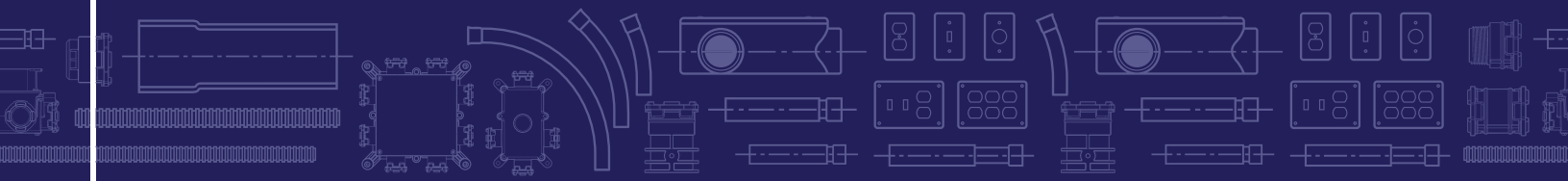

Our various pipe and fittings solutions have been manufactured to meet the needs of our customers and their applications. Contact the below Sales Center for more information:

- Plumbing Fittings Solutions
- Electrical Pipe & Fittings Solutions
- Municipal Pipe & Fittings Solutions



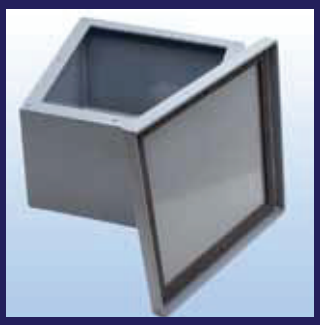

Sales & Distribution Center:

Royal Building Products
56400 Mound Road
Shelby Twp., MI 48316
T 1.800.232.5690
F 586.781.0888

royalbuildingproducts.com/plastic-trends

Printed 11.2012

ROYAL
Building Products

Pipe & Fittings Solutions | Municipal Plumbing Electrical

Liquid-Tight Conduit
Malleable Iron Connectors

Technical Specifications

- Heavy duty malleable iron.
- Zinc electroplated for corrosion resistance.
- Tapered threaded hub complete with nitrile “O” ring and steel locknut.



CI6103 (-IT) / CI6116 (-IT)

IT: with insulated throat.

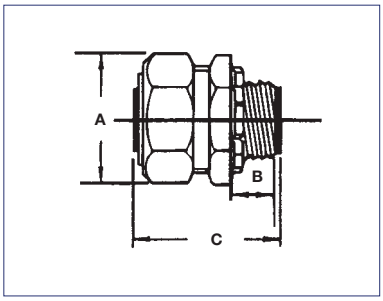



CI6303 (-IT) / CI6316 (-IT)

IT: with insulated throat.

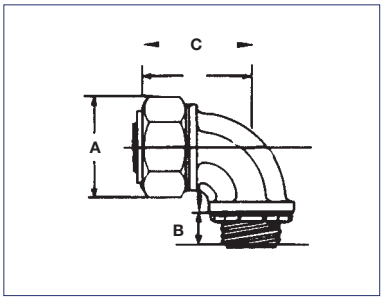



LT-450 / LT-453

Cat. No.	Trade Size	KO Size	Dimensions A	B	C
Straight Liquid–Tight Connectors (Malleable Iron)					
CI6103	3/8	1/2	1-1/8	1/2	1-1/2
CI6104	1/2	1/2	1-1/4	1/2	1-1/2
CI6106	3/4	3/4	1-1/2	9/16	1-3/4
CI6108	1	1	1 3/4	5/8	1-7/8
CI6110	1-1/4	1-1/4	2-1/4	11/16	2-3/16
CI6112	1-1/2	1-1/2	2-9/16	13/16	2-3/8
CI6116	2	2	3-1/16	15/16	2-7/8
Straight Insulated Liquid–Tight Connectors (Malleable Iron)					
CI6103-IT	3/8	1/2	1-1/8	1/2	1-9/16
CI6104-IT	1/2	1/2	1-1/4	1/2	1-9/16
CI6106-IT	3/4	3/4	1-1/2	9/16	1-13/16
CI6108-IT	1	1	1-3/4	5/8	1-15/16
CI6110-IT	1-1/4	1-1/4	2-1/4	11/16	2-1/4
CI6112-IT	1-1/2	1-1/2	2-9/16	13/16	2-7/16
CI6116-IT	2	2	3-1/16	15/16	2-15/16
90° Liquid–Tight Connectors (Malleable Iron)					
CI6303	3/8	1/2	1-1/8	1/2	1-5/8
CI6304	1/2	1/2	1-1/4	1/2	1-3/4
CI6306	3/4	3/4	1-1/2	9/16	2-1/16
CI6308	1	1	1-3/4	5/8	2-1/4
CI6310	1-1/4	1-1/4	2-1/4	11/16	2-3/4
CI6312	1-1/2	1-1/2	2-9/16	13/16	3-1/8
CI6316	2	2	3-1/16	15/16	3-3/8
90° Insulated Liquid–Tight Connectors (Malleable Iron)					
CI6303-IT	3/8	1/2	1-1/8	1/2	1-5/8
CI6304-IT	1/2	1/2	1-1/4	1/2	1-3/4
CI6306-IT	3/4	3/4	1-1/2	9/16	2-1/16
CI6308-IT	1	1	1-3/4	5/8	2-1/4
CI6310-IT	1-1/4	1-1/4	2-1/4	11/16	2-3/4
CI6312-IT	1-1/2	1-1/2	2-9/16	13/16	3-1/8
CI6316-IT	2	2	3-1/16	15/16	3-3/8
45° Liquid–Tight Connectors (Malleable Iron)					
LT-450	3/8	1/2	1-1/16	1/2	1-9/16
LT-451	1/2	1/2	1-3/16	1/2	1-5/8
LT-452	3/4	3/4	1-7/16	9/16	7/8
LT-453	1	1	1-3/4	5/8	2-1/8
45° Connectors – Insulated Throat (Malleable Iron)					
LT-950	3/8	1/2	1-1/16	1/2	1-9/16
LT-951	1/2	1/2	1-3/16	1/2	1-5/8
LT-952	3/4	3/4	1-7/16	9/16	1-7/8
LT-953	1	1	1-3/4	5/8	2-1/8

Liquid-Tight Conduit

Zinc Alloy Connectors



CI6603 (-IT) / CI6632 (-IT)

IT: with insulated throat.

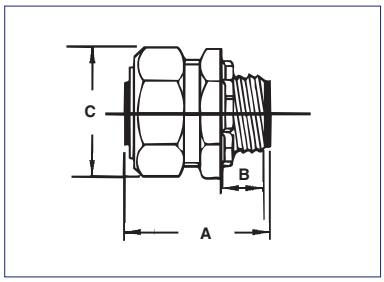



CI6703 (-IT) / CI6716 (-IT)

IT: with insulated throat.

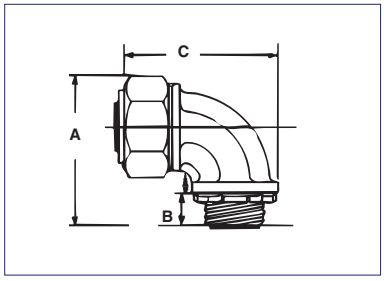

Technical Specifications

Cat. No.	Trade Size	KO Size	Dimensions A	B	C
Straight Liquid-Tight Connectors (Zinc Alloy)					
CI6603	3/8	1/2	1.58	0.53	1.18
CI6604	1/2	1/2	1.52	0.53	1.29
CI6606	3/4	3/4	1.69	0.53	1.57
CI6608	1	1	2.06	0.58	1.81
CI6610	1-1/4	1-1/4	2.06	0.61	2.18
CI6612	1-1/2	1-1/2	2.09	0.63	2.51
CI6616	2	2	2.15	0.63	3.03
CI6620	2-1/2	2-1/2	3.54	1.02	3.68
CI6624	3	3	4.05	1.07	4.38
CI6632	4	4	4.99	1.15	5.54
Straight Insulated Liquid-Tight Connectors (Zinc Alloy)					
CI6603-IT	3/8	1/2	1.66	0.63	1.18
CI6604-IT	1/2	1/2	1.62	0.63	1.29
CI6606-IT	3/4	3/4	1.79	0.63	1.57
CI6608-IT	1	1	2.16	0.68	1.81
CI6610-IT	1-1/4	1-1/4	2.16	0.71	2.18
CI6612-IT	1-1/2	1-1/2	2.19	0.73	2.51
CI6616-IT	2	2	2.25	0.73	3.03
CI6620-IT	2-1/2	2-1/2	3.64	1.12	3.68
CI6624-IT	3	3	4.15	1.17	4.38
CI6632-IT	4	4	5.09	1.25	5.54
90° Liquid-Tight Connectors (Zinc Alloy)					
CI6703	3/8	1/2	2.11	0.53	2.53
CI6704	1/2	1/2	2.24	0.53	2.46
CI6706	3/4	3/4	2.47	0.55	2.79
CI6708	1	1	3.46	0.58	3.86
CI6710	1-1/4	1-1/4	3.37	0.67	3.99
CI6712	1-1/2	1-1/2	4.28	0.61	5.04
CI6716	2	2	4.21	0.71	5.06
LT-297	2-1/2	2-1/2	4.32	0.88	3.65
LT-298	3	3	4.81	0.88	4.32
LT-2910	4	4	5.32	0.88	5.32
90° Insulated Liquid-Tight Connectors (Zinc Alloy)					
CI6703-IT	3/8	1/2	2.27	0.63	2.53
CI6704-IT	1/2	1/2	2.24	0.63	2.46
CI6706-IT	3/4	3/4	2.54	0.65	2.79
CI6708-IT	1	1	3.25	0.68	3.86
CI6710-IT	1-1/4	1-1/4	3.50	0.77	3.99
CI6712-IT	1-1/2	1-1/2	4.30	0.71	5.04
CI6716-IT	2	2	5.16	0.81	5.06
LT-897	2-1/2	2-1/2	4.32	0.88	3.65
LT-898	3	3	4.81	0.88	4.32
LT-8910	4	4	5.32	0.88	5.32

Tapered threaded hub complete with zinc die cast locknut.

Steel Core

Type LT



JIC

Trade Size (in.)	Cat. No.	Carton Content* (m)	Cat. No.	Reel Content* (m)	Cat. No.	Reel Content* (m)	Inside Bend Radius		Weight kg/30m
							in.	(mm)	
1/4	LT025-75	75	-	-	-	-	1.0	(25.4)	8
5/16	LT032-75	75	-	-	-	-	1.0	(25.4)	8
3/8	LT038-30	30	LT038-150	150	LT038-300	300	1.5	(38.1)	9
1/2	LT050-30	30	LT050-150	150	LT050-300	300	2.0	(50.8)	11
3/4	LT075-30	30	LT075-150	150	LT075-300	300	2.5	(63.5)	15
1	LT100-30	30	LT100-120	120	-		3.0	(76.2)	24
1-1/4	LT125-15	15	LT125-75	75	-	-	3.5	(88.9)	31
1-1/2	LT150-15	15	LT150-45	45	-	-	4.5	(114.3)	40
2	LT200-15	15	LT200-30	30	-		5.5	(139.7)	53
5	LT500-8	8	-	-	-	-	17.5	(444.5)	212
6	LT600-8	8	-	-	-	-	22.5	(571.5)	259

See Chart on p. G28 for dimensions and tolerances
* See p. G27 for label and packaging detail

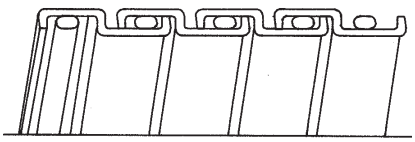

Squarelock with Filler
5/16 in. - 2 in.

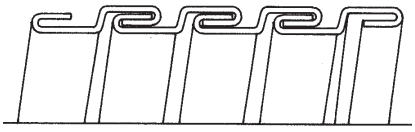

Interlock
2-1/2 in. - 6 in.

Type LT

A general purpose, flexible liquidtight steel conduit designed for a variety of installations requiring motion, vibration and bending. It offers good mechanical and moisture protection to enclosed conductors.

Construction

The flexible inner core is made from a spiral wound strip of corrosion resistant plating steel. The 1/4 through 2 inch trade sizes are squarelock formed and, with the exception of the 1/4 inch size, contain a nylon cord packing within the convolutions.

The larger sizes are constructed with a fully interlocked strip to add strength and to prevent unraveling.

A flexible yet durable PVC jacket is extruded over this core creating a liquidtight conduit resistant to most oils, acids and vapors present in industrial environments.

Refer to the Conduit — Chemical Resistance Chart beginning on p. G30.

Applications

This conduit is used extensively in the machine tool and other industrial environments where flexibility is necessary for installation and maintenance or where vibration and movement must be absorbed. The inherent sunlight resistance of PVC enables this product to be used in outdoor applications. Compatible with standard liquidtight fittings. The construction of this conduit conforms to, and is suitable for use with Sections 16 & 17.7 of the Electrical Standard for Industrial Machinery (ANSI/NFPA-79).

Working Temperatures

-20°C to 80°C

Listing / Certification

JIC — manufactured in accordance with the dimensions and specifications as outlined by the Joint Industrial Council Standard for Mass Production Equipment and Machine Tools.

Standard Colours

Machine tool grey and black. Other colours available upon request. Part numbers listed designate grey jacket.

Steel Core

Type LOR



Trade Size (in.)	Cat. No.	Carton Content* (m)	Cat. No.	Carton Content* (m)	Cat. No.	Carton Content* (m)	Inside Bend Radius		Wt. kg/30m
							in.	(mm)	
3/8	LOR038-30	30	LOR038-150	150	LOR038-300	300	2.0	(50.8)	19
1/2	LOR050-50	30	LOR050-150	150	LOR050-300	300	2.5	(63.5)	11
3/4	LOR075-30	30	LOR075-150	150	LOR075-300	300	3.0	(76.2)	15
1	LOR100-30	30	LOR100-120	120	-	-	4.0	(101.6)	24
1-1/4	LOR125-15	15	LOR125-60	60	-	-	4.5	(114.3)	31
1-1/2	LOR150-15	15	-	-	-	-	5.5	(139.7)	40
2	LOR200-15	15	-	-	-	-	7.0	(177.8)	53
2-1/2	LOR250-8	8	-	-	-	-	9.5	(241.3)	76
3	LOR300-8	8	-	-	-	-	11.5	(292.1)	118
3-1/2	LOR350-8	8	-	-	-	-	13.0	(330.2)	132
4	LOR400-8	8	-	-	-	-	14.0	(356.6)	156
5	LOR500-8	8	-	-	-	-	20.0	(508.0)	221
6	LOR600-8	8	-	-	-	-	22.5	(571.5)	259

See Chart on p. G28 for dimensions and tolerances
* See p. G27 for label and packaging detail

Type LOR

JIC

This product is offered as a non-UL oil-resistant conduit that incorporates a high quality PVC jacket.

Applications

The LOR is ideally used in situations where a UL listing or CSA certification is not a factor but where a flexible conduit must withstand exposure to many harsh chemicals, oils, UV, etc. This conduit conforms to Section 17.7 of the Electrical Standard for Industrial Machinery. (ANSI/NFPA-79) Compatible with Standard Liquidtight Fittings.

Working Temperatures

-20°C to 60°C intermitting to 90°C

Standard Colours

Machine tool grey and black. Other colours available upon request. Part numbers listed designate grey jacket.

Note

For a UL listed version, consult your Regional Sales Office for Type LA/LOR.

Type EF



Trade Size (in.)	Cat. No.	Carton Content* (m)	Cat. No.	Carton Content* (m)	Cat. No.	Carton Content* (m)	Inside Bend Radius		Wt. kg/30m
							in.	(mm)	
3/8	EF038-30	30	EF038-150	150	EF038-300	300	1.5	(38.1)	9
1/2	EF050-30	30	EF050-150	150	EF050-300	300	2.0	(50.8)	11
3/4	EF075-30	30	EF075-150	150	EF075-300	300	3.0	(63.5)	14
1	EF100-30	30	EF100-120	120	-	-	3.0	(76.2)	20
1-1/4	EF125-15	15	EF125-75	75	-	-	3.5	(88.9)	25
1-1/2	EF150-15	15	EF150-45	45	-	-	4.5	(114.3)	41
2	EF200-15	15	EF200-30	30	-	-	5.5	(139.7)	5

See Chart on p. G28 for dimensions and tolerances
* See p. G27 for label and packaging detail

Type EF

JIC

This flexible liquidtight conduit is a competitive grade version of our Type LT. It conforms to both the JIC standards for dimensions and general construction, and to Section 17.7 of the Electrical Standard for Industrial Machinery (ANSI/NFPA-79).

Construction

The flexible inner core is constructed from a helically formed strip of corrosion resistant steel. A liquidtight PVC jacket is then extruded over the core.

Applications

General installations requiring some movement and protection for contained conductors. Forms a liquidtight system when installed with standard fittings for use indoors or out.

Working Temperatures

-20°C to 80°C

Standard Colour

Machine tool grey

Steel Core

Type LA

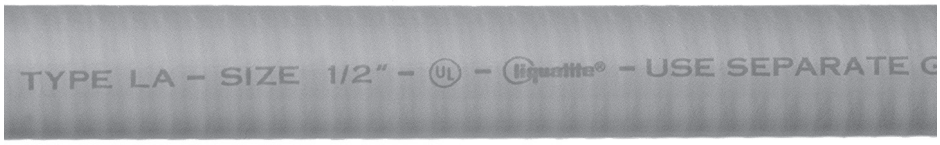

Trade Size (in.)	Cat. No.	Carton Content* (m)	Cat. No.	Reel Content* (m)	Cat. No.	Reel Content* (m)	Inside Bend Radius		Weight kg/30m
							in.	(mm)	
3/8	LA038-30	30	LA038-150	150	LA038-300	300	2.0	(50.8)	13
1/2	LA050-30	30	LA050-150	150	LA050-300	300	3.0	(76.2)	15
3/4	LA075-30	30	LA075-150	150	LA075-300	300	4.2	(106.7)	24
1	LA100-30	30	LA100-120	120	-	-	5.5	(139.7)	37
1-1/4	LA125-15	15	LA125-60	60	-	-	7.0	(177.8)	46
1-1/2	LA150-15	15	LA150-45	45	-	-	4.5	(114.3)	47
2	LA200-15	15	LA200-30	30	-	-	6.0	(152.4)	66
2-1/2	LA250-8	8	LA250-80	80	-	-	8.0	(203.2)	87
3	LA300-8	8	LA300-50	50	-	-	10.0	(254.0)	114
3-1/2	LA350-8	8	LA350-50	50	-	-	11.0	(279.4)	140
4	LA400-8	8	LA400-30	30	-	-	12.0	(304.8)	154

See Chart on p. G28 for dimensions and tolerances
* See p. G27 for label and packaging detail

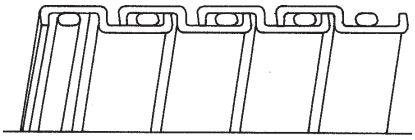

Squarelock with filler
3/8 in. - 1-1/4 in.

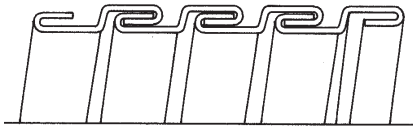

Interlock
1-1/2 in. - 4 in.

Type LA

A flexible liquidtight steel conduit which is both listed UL and certified CSA. It offers outstanding protection against wet, oily conditions and is permitted for use in exposed or concealed locations.

Construction

The flexible inner core is made from a spiral wound strip of heavy gauge, corrosion resistant, hot-dipped galvanized steel. The 3/8 through 1-1/4 inch trade sizes are square lock formed and include an integral bonding strip of copper that is enclosed within the convolutions throughout its entire length. The 1-1/2 through 4 inch trade sizes are designed with a fully interlocked strip.

The liquidtight jacketing material is of a high quality, rugged, flame retardant flexible PVC compound which resists oils, mild acids and exposure to sunlight. For further information, refer to the Conduit — Chemical Resistance chart beginning on p. G30.

Applications

This conduit is intended for installation with Rule 12-1300 of Canadian Electrical Code (CEC) Part I 2009.

The use of a separate bonding conductor is mandatory in accordance with CEC Rule 12-1306 for Ordinary locations.

The use of Liquidtight Flexible Conduit with sign and Outline Lighting are in accordance with CEC Rule 34-400 (2):

- Listed and marked for direct burial and in poured concrete
- For containment of 600-volt and lower potential circuits
- Sunlight resistant

Working Temperatures

-30 ºC to 80 ºC (dry) / 60 ºC (wet) and 70 ºC (oil)

Listing / Certification

Certified. Conforms to CSA 22.2 No. 56 for use per CEC C22.1 Section 12-1300.

Listed. Conforms to UL Standard ANSI/UL-360 for Liquidtight Flexible Steel Conduit.

Standard Colours

Machine tool grey, and black. Other colours available upon request. Blue is commonly used for computer room installations.
See TYPE CBLA on p. G8.

Steel Core

Type CBLA — Computer Blue

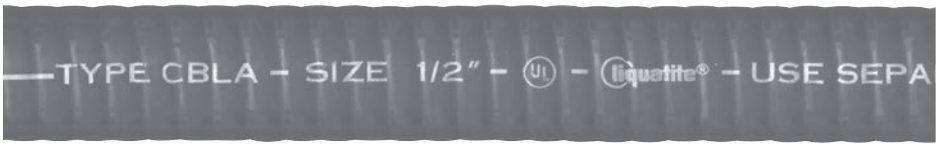

Trade Size (in.)	Cat. No.	Carton Content* (m)	Cat. No.	Reel Content* (m)	Cat. No.	Reel Content* (m)	Inside Bend Radius		Weight kg/30m
							in.	(mm)	
3/8	CBLA038-30	30	CBLA038-150	150	CBLA038-300	300	2.0	(50.8)	13
1/2	CBLA050-30	30	CBLA050-150	150	CBLA050-300	300	3.0	(76.2)	15
3/4	CBLA075-30	30	CBLA075-150	150	CBLA075-300	300	4.2	(106.7)	24
1	CBLA100-30	30	CBLA100-120	120	-	-	5.5	(139.7)	37
1-1/4	CBLA125-15	15	CBLA125-60	60	-	-	7.0	(177.8)	46
1-1/2	CBLA150-15	15	CBLA150-45	45	-	-	4.5	(114.3)	47
2	CBLA200-15	15	CBLA200-30	30	-	-	6.0	(152.4)	66
2-1/2	CBLA250-8	8	CBLA250-80	80	-	-	8.0	(203.2)	87
3	CBLA300-8	8	CBLA300-50	50	-	-	10.0	(254.0)	114
3-1/2	CBLA350-8	8	CBLA350-50	50	-	-	11.0	(279.4)	140
4	CBLA400-8	8	CBLA400-30	30	-	-	12.0	(304.8)	154

See Chart on p. G28 for dimensions and tolerances
* See p. G27 for label and packaging detail

Type CBLA

Computer Blue LA is a liquidtight flexible steel conduit commonly used for computer room installations. The blue jacket colour easily identifies circuitry for computer power wiring.

Construction

CBLA has a flexible inner core made from a spiral wound strip of heavy gauge, hot-dipped galvanized steel. The 3/8 through 1-1/4 inch trade sizes contain an integral bonding strip of copper. The 1-1/2 and larger sizes are designed with a fully interlocked strip.

The jacketing material is a rugged flame retardant flexible blue PVC. For installations which do not allow the use of PVC, see TYPE ZHLA on p. G12.

Applications

Listed and marked for direct burial and in poured concrete.

Working Temperatures

-20°C to 60°C

Listing / Certification

Certified. Conforms to CSA 22.2 No. 56 for use per CEC C22.1 Section 12-1300

Listed. Conforms to UL Standard ANSI/UL-360 for Liquidtight Flexible Steel Conduit

Steel Core

Type CSA



Trade Size (in.)	Cat. No.	Carton Content* (m)	Cat. No.	Reel Content* (m)	Cat. No.	Reel Content* (m)	Inside Bend Radius		Weight kg/30m
							in.	(mm)	
3/8	CSA038-30	30	CSA038-150	150	CSA038-300	300	2.0	(50.8)	11
2.8 1/2	CSA050-30	30	CSA050-150	150	CSA050-300	300	3.0	(76.2)	16
3/4	CSA075-15	15	-	-		-	-		
3/4	CSA075-30	30	CSA075-150	150	CSA075-300	300	4.0	(101.6)	24
1	CSA100-30	30	CSA100-120	-	-	-	5.0	(127.0)	27
1-1/4	CSA125-15	15	CSA125-60	60	-	-	6.2	(157.5)	39
1-1/2	CSA150-15	15	CSA150-45	45	-	-	4.5	(114.3)	55
2	CSA200-15	15	CSA200-30	30	-	-	6.0	(152.4)	70
2-1/2	CSA250-8	8	-	-	-	-	8.0	(203.2)	93
3	CSA300-8	8	-	-	-	-	10.0	(254.0)	120
4	CSA400-8	8	-	-	-	-	12.0	(304.8)	181

See Chart on p. G28 for dimensions and tolerances
* See p. G27 for label and packaging detail

Type CSA

This flexible liquidtight steel conduit is certified CSA. Its design and function is similar to that of type LA except that it cannot be used as a ground return path per CEC. It also offers a wider operating temperature range.

Construction

The flexible inner core is made from a spiral wound strip of heavy gauge, corrosion resistant, hot-dipped galvanized steel. The 3/8 through 1-1/4 inch trade sizes are cord packed.

The durable PVC flame retardant jacket is designed for good flexibility and impact resistance at low temperatures.

Applications

This conduit is intended for use according to CEC as described in section 12-1300 for dry, damp or wet locations where flexibility is necessary.

This conduit is intended for installation with Rule 12-1300 of Canadian Electrical Code (CEC) Part I 2009.

The use of a separate bonding conductor is mandatory in accordance with CEC Rule 12-1306 for Ordinary Locations.

The use of Liquidtight Flexible Conduit with sign and Outline Lighting are in accordance with CEC Rule 34-400 (2)

Working Temperatures

-40°C to 75°C

Listing / Certification

Certified. Conforms to CSA Standard C22.2, No. 56. Flame Test Rating FT-4 per CSA Standard C22.2, No. 0.3.

Standard Colour

Black

Steel Core

Type ATLA — All Temperature



Trade Size (in.)	Cat. No.	Carton Content* (m)	Cat. No.	Reel Content* (m)	Cat. No.	Reel Content* (m)	Inside Bend Radius		Weight kg/30m
							in.	(mm)	
3/8	ATLA038-30	30	ATLA038-150	150	ATLA038-300	300	2.0	(50.8)	13
1/2	ATLA050-30	30	ATLA050-150	150	ATLA050-300	300	3.0	(76.2)	15
3/4	ATLA075-30	30	ATLA075-150	150	ATLA075-300	300	4.2	(106.7)	24
1	ATLA100-30	30	ATLA100-120	120	-	-	5.5	(139.7)	37
1-1/4	ATLA125-15	15	ATLA125-60	60	-	-	7.0	(177.8)	46
1-1/2	ATLA150-15	15	ATLA150-45	45	-	-	4.5	(114.3)	47
2	ATLA200-15	15	ATLA200-30	30	-	-	6.0	(152.4)	66
2-1/2	ATLA250-8**	8	-	-	-	-	8.0	(203.2)	87
3	ATLA300-8**	8	-	-	-	-	10.0	(254.0)	114
3-1/2	ATLA350-8**	8	-	-	-	-	11.0	(279.4)	140
4	ATLA400-8**	8	-	-	-	-	12.0	(304.8)	154

See Chart on p. G28 for dimensions and tolerances
* See p. G27 for label and packaging detail
** CSA not applicable

Type ATLA

A liquidtight flexible steel conduit designed specifically for extreme hot or cold environments. The flexible inner core is identical to that found in Type LA. The specially formulated PVC jacket remains flexible at low temperatures and resists ageing at elevated temperatures. It is listed UL and certified CSA.

Construction

ATLA has a flexible inner core made from a spiral wound strip of heavy gauge, hot-dipped galvanized steel. The 3/8 through 1-1/4 inch trade sizes contain an integral bonding strip of copper. The 1-1/2 and larger sizes are designed with a fully interlocked strip.

The jacketing material is a rugged flame retardant flexible PVC resistant to weathering, UV, oils and many chemicals. Refer to the Conduit — Chemical Resistance Guide beginning on p. G30.

Applications

Designed to be used with high temperature machine tool wiring. Ideal for outdoor installations in cold
climates. This conduit is intended for installation with Rule 12-1300 of Canadian Electrical Code (CEC) Part I 2002.

The use of a separate bonding conductor is mandatory in accordance with CEC Rule 12-1306 for Ordinary locations.

The use of Liquidtight Flexible Conduit with sign and Outline Lighting are in accordance with CEC Rule 34-400 (2).

- Listed and marked for direct burial and in poured concrete
- For containment of 600-volt and lower potential circuits

Working Temperatures

-55°C to 105°C Air / 60°C Wet / 70°C Oil

Listing / Certification

Certified. Conforms to CSA 22.2 No. 56 for use per the CEC C22.1 Section 12-1300

Listed. Conforms to UL Standard ANSI/UL-360 for Liquidtight Flexible Steel Conduit

Conforms to the requirements of Section 16 & 17.7 of the ANSI/NFPA-79 Electrical Standard for Industrial Machinery.

Standard Colour

Machine tool grey

Steel Core

Type AT — High and Low Temperatures



Trade Size (in.)	Cat. No.	Carton Content* (m)	Cat. No.	Reel Content* (m)	Cat. No.	Reel Content* (m)	Inside Bend Radius		Weight kg/30m
							in.	(mm)	
3/8	AT038-30	30	AT038-150	150	AT038-300	300	1.5	(38.1)	9
1/2	AT050-30	30	AT050-150	150	AT050-300	300	2.0	(50.8)	11
3/4	AT075-30	30	AT075-150	150	AT075-300	300	2.5	(63.5)	15
1	AT100-30	30	AT100-120	120	-	-	3.0	(76.2)	24
1-1/4	AT125-15	15	AT125-60	60	-	-	3.5	(88.9)	31
1-1/2	AT150-15	15	AT150-45	45	-	-	4.5	(114.3)	40
2	AT200-15	15	AT200-30	30	-	-	5.5	(139.7)	53
2-1/2	AT250-8	8	-	-	-	-	8.0	(203.2)	76
3	AT300-8	8	-	-	-	-	10.0	(254.0)	118
3-1/2	AT350-8	8	-	-	-	-	11.0	(279.4)	132
4	AT400-8	8	-	-	-	-	12.0	(304.8)	156
5	AT500-8	8	-	-	-	-	17.5	(444.5)	221
6	AT600-8	8	-	-	-	-	22.5	(571.5)	259

See Chart on p. G28 for dimensions and tolerances
* See p. G27 for label and packaging detail

Type AT

A flexible steel conduit which uses a jacketing material specifically designed for hot or cold environments.

Applications

Type AT is well suited for exposure to extreme climatic conditions. It is also widely used on industrial process equipment such as annealing ovens, lumber kilns, foundries and refrigeration, etc. The construction of this conduit conforms to, and is suitable for use with Sections 16 and 17.7 of the Electrical Standard for Industrial Machinery (ANSI/NFPA-79). Uses standard liquidtight fittings.

Working Temperatures

-55°C to 105°C intermitting to 120°C

Standard Colour

Machine tool grey

Note

For a UL listed and CSA certified version, see TYPE ATLA on p. G10.

Type ATX — Extreme Temperature



Trade Size (in.)	Cat. No.	Carton Content* (m)	Cat. No.	Reel Content* (m)	Cat. No.	Reel Content* (m)	Inside Bend Radius		Weight kg/30m
							in.	(mm)	
3/8	ATX038-30	30	ATX038-150	150	ATX038-300	300	1.5	(38.1)	10
1/2	ATX050-30	30	ATX050-150	150	ATX050-300	300	2.0	(50.8)	12
3/4	ATX075-30	30	ATX075-150	150	ATX075-300	300	2.5	(63.5)	18
1	ATX100-30	30	ATX100-120	120	-	-	3.0	(76.2)	25
1-1/4	ATX125-15	15	ATX125-60	60	-	-	3.5	(88.9)	33
1-1/2	ATX150-15	15	ATX150-45	45	-	-	4.5	(114.3)	47
2	ATX200-15	15	ATX200-30	30	-	-	5.5	(139.7)	62
2-1/2	ATX250-8	8	-	-	-	-	8.0	(203.2)	85
3	ATX300-8	8	-	-	-	-	10.0	(254.0)	111
4	ATX400-8	8	-	-	-	-	12.0	(304.8)	151

See Chart on p. G28 for dimensions and tolerances
* See p. G27 for label and packaging detail

Type ATX

A conduit designed to withstand an extreme temperature range.

Construction

Utilizes the flexibility of our standard LT core, coupled with the advantage of a thermoplastic rubber jacket that is virtually unaffected by temperature extremes and contains no halogens. The material has a UL 94-HB flammability rating.

Applications

Used in situations where there are concerns of resistance to temperature exposure. These include heavy outdoor equipment, boilers and furnaces, etc. Refer to the Conduit — Chemical Resistance Guide beginning on p. G30.

Working Temperatures

-60°C to 150°C intermitting to 165°C

Standard Colour

Black

Steel Core

Type ZHLA — Non-Halogen, Low Smoke, Flame Retardant



Trade Size (in.)	Cat. No.	Carton Content* (m)	Cat. No.	Reel Content* (m)	Cat. No.	Reel Content* (m)	Inside Bend Radius		Weight kg/30m
							in.	(mm)	
3/8	ZHLA038-30	30	ZHLA038-150	150	ZHLA038-300	300	2.0	(50.8)	13
1/2	ZHLA050-30	30	ZHLA050-150	150	ZHLA050-300	300	3.0	(76.2)	15
3/4	ZHLA075-30	30	ZHLA075-150	150	ZHLA075-300	300	4.2	(106.7)	24
1	ZHLA100-30	30	ZHLA100-120	120	-	-	5.5	(139.7)	37
1-1/4	ZHLA125-15	15	ZHLA125-60	60	-	-	7.0	(177.8)	46
1-1/2	ZHLA150-15	15	ZHLA150-45	45	-	-	4.5	(114.3)	47
2	ZHLA200-15	15	ZHLA200-30	30	-	-	6.0	(152.4)	66
2-1/2	ZHLA250-8	8	-	-	-	-	8.0	(203.2)	87
3	ZHLA300-8	8	-	-	-	-	10.0	(254.0)	114
3-1/2	ZHLA350-8	8	-	-	-	-	11.0	(279.4)	140
4	ZHLA400-8	8	-	-	-	-	12.0	(304.8)	154

See Chart on p. G28 for dimensions and tolerances
* See p. G27 for label and packaging detail

Type ZHLA Combustion & Flammability Properties

Combustion & Flammability Properties**	Test	Value
-Vertical Burn (Material)	UL94	V-0 Rating
		No Flaming Drips
-Vertical Burn (Conduit)	UL360	Pass
		No Flaming Drips
-Oxygen Index %	D2863	28.5
-Flame Spread Index	ASTM E162	20;
		No Flaming Drips
-Flame Propagation	ASTM C542	Pass
	(NFPA-130)	No Flaming Drips
-Smoke Generation (Flaming)	ASTM E662	Ds 50 @ 1.5 min
	(NFPA 258)	Ds 102 @ 4.0 min
-Smoke Generation (Non-Flaming)	ASTM E662	Ds 5 @ 1.5 min
	(NFPA 258)	Ds 26 @ 4.0 min
-Toxic Gas Generation	BOMBARDIER SMP 800-C	Pass
-Toxicity Index	NES 713	3.9

**Test data is based on controlled laboratory conditions and does not necessarily reflect performance in actual fire conditions
Additional product information available upon request

Type ZHLA

Non-halogen, low smoke and low flame spread are what makes Type ZHLA a proven choice for applications where limiting toxic combustion materials is an important issue. Since ZHLA is also UL Listed, it is ideal for field installation in confined, public areas such as subways, tunnels, etc.

Construction

ZHLA has a flexible inner core made from a spiral wound strip of heavy gauge, hot-dipped galvanized steel. The 3/8 in. through 1-1/4 in. trade sizes contain an integral bonding strip of copper. The 1-1/2 in. and larger sizes are designed with a fully interlocked strip. The specially formulated thermoplastic black polyurethane jacket has excellent flame resistance and low smoke and toxicity generation characteristics. It is also resistant to ozone, hydrocarbons, moderate chemicals, oils and fuels. Refer to the Conduit — Chemical Resistance Guide beginning on p. G30.

Applications

There are many situations and areas where PVC is not allowed for electrical construction. The jacketing material used for ZHLA virtually eliminates the release of acidic gases found in PVC products.

- Meets the requirements of Bombardier SMP 800-C for Toxic Gas Generation
- Meets the requirements of both ASTM E162 for Flame Spread and ASTM E662 for Smoke Generation.
- Listed and marked for direct burial and in poured concrete.
- For containment of 600 V and lower potential circuits.
- Sunlight resistant

Working Temperatures

-40°C to 80°C Air / 60°C Wet / 70°C Oil

Listing / Certification

Certified. Conforms to CSA 22.2 No. 56 for use per the CEC C22.1 Section 12-1300

Listed. Conforms to UL Standard ANSI/ UL-360 for Liquidtight Flexible Steel Conduit

Standard Colour

Black

Steel Core

Type CEA — Non-Halogen, Low Smoke, Flame Retardant



Trade Size (in.)	Cat. No.	Carton Content* (m)	Cat. No.	Reel Content* (m)	Minimum Jacket Thickness	Inside Bend Radius		Weight kg/30m
						in.	(mm)	
3/8	CEA038-30	30	CEA038-150	150	300	1.5	(38.1)	9
1/2	CEA050-30	30	CEA050-150	150	300	2.0	(50.8)	11
3/4	CEA075-30	30	CEA075-150	150	300	2.5	(63.5)	15
1	CEA100-30	30	CEA100-120	120	-	3.0	(76.2)	24
1-1/4	CEA125-15	15	CEA125-60	60	-	3.5	(88.9)	31
1-1/2	CEA150-15	15	CEA150-45	45	-	4.5	(114.3)	40
2	CEA200-15	15	CEA200-30	30	-	5.5	(139.7)	53
2-1/2	CEA250-8	8	-	-	-	8.0	(203.2)	76
3	CEA300-8	8	-	-	-	10.0	(254.0)	118
3-1/2	CEA350-8	8	-	-	-	11.0	(279.4)	132
4	CEA400-8	8	-	-	-	12.0	(304.8)	156
5	CEA500-8**	8	-	-	2.5	17.5	(444.5)	212
6	CEA600-8**	8	-	-	2.5	22.5	(635.0)	259

See Chart on p. G28 for dimensions and tolerances
* See p. G27 for label and packaging detail
**Available on request
Type ACEA also available (liquidtight flexible aluminum conduit)
Aluminum core weighs approximately one third less than steel core

Type CEA Combustion & Flammability Properties

Combustion & Flammability Properties**	Test	Value
-Vertical Burn (Material)	UL94	V-0 Rating
		No Flaming Drips
-Vertical Burn (Conduit)	UL360	Pass
		No Flaming Drips
-Oxygen Index %	D2863	28.5
-Flame Spread Index	ASTM E162	20;
		No Flaming Drips
-Flame Propagation	ASTM C542	Pass
	(NFPA-130)	No Flaming Drips
-Smoke Generation (Flaming)	ASTM E662	Ds 50 @ 1.5 min
	(NFPA 258)	Ds 102 @ 4.0 min
-Smoke Generation (Non-Flaming)	ASTM E662	Ds 5 @ 1.5 min
	(NFPA 258)	Ds 26 @ 4.0 min
-Toxic Gas Generation	BOMBARDIER SMP 800-C	Pass
-Toxicity Index	NES 713	3.9

**Test data is based on controlled laboratory conditions and does not necessarily reflect performance in actual fire conditions
Additional product information available upon request

Type CEA

This liquidtight flexible steel conduit is designed for applications where safety concerns exist regarding a material's reaction in a fire situation.

Construction

The flexible inner core of this product is made from a galvanized steel strip. As in type LT, this core contains string packing between the helical convolutions in trade sizes 3/8 in. through 2 in. The specially formulated thermoplastic polyurethane jacket has excellent flame retardant characteristics as well as low smoke and toxicity generation characteristics. Acidic gases such as hydrogen chloride, hydrogen fluoride and hydrogen bromide are virtually eliminated as products of combustion.

Applications

This product is ideally suited for installation in confined or enclosed areas where construction materials must generate very little smoke, and have a low flame spread as well as low toxic gas emissions in the event of fire. Such applications include mass transit vehicles where CEA is extensively used for wiring harnesses within and under passenger rail cars. Other applications include use in underground subway structures and tunnels.

Working Temperatures

-40°C to 80°C

Standard Colours

Grey and black. Other colours available upon request. Part numbers listed designate grey jacket.

Steel Core

Type BR



Type BR

This non-jacketed flexible steel conduit has many universal wiring applications. It is often referred to as "Greenfield" or "Reduced Wall Flex".

Construction

Type BR is formed from high corrosion resistant hot-dipped galvanized steel. Its profile and helical shape allow it to withstand impact and crushing forces.

Applications

General Use: In accordance with CEC Rule 12-1002 (1) the flexible metal conduit is permitted in or on buildings of either combustible or non-combustible constructions.

Restriction and Exception:

CEC Rule 12-1004 (a) states:"12 (3/8) trade size flexible metal conduit shall be permitted to be used for runs of not more than 1.5 m (5 ft.) for the connection of equipment." and CEC Rule 12-1004 (b) states:"12 (3/8) trade size liquidtight flexible conduit may be used as permitted by this code."

Securements with straps:

CEC Rule 12-1010 (3) states: "When flexible metal conduit is installed, it shall be secured at intervals not exceeding 1.5 m (5 ft.) and within 300 mm (12 in.) on each side of every outlet box or fitting except where flexible metal conduit is fished and except for lengths of not over 900 mm (3 ft) at terminals where flexibility is necessary."

Conductor fill:

CEC Rule 12-1014 defines the maximum number of conductor, the CEC Tables 6 provides the maximum number of conductors of one size in trade sizes of conduit, CEC Table 8 provides the maximum allowable per cent conduit fill, and CEC Table 9 provides the cross-sectional areas of conduit.

Specific Use and applications:

Elevators, Hoistways, in accordance with CEC Rules 38-021 (1) (a) (1) and 38-021 (1) (a) (iv) Elevators, Cars, in accordance with CEC Rules 38-021 (1) (b) (v) Elevators, Within Machine Rooms, Control Rooms and Machinery Spaces and Control Spaces, in accordance with CEC Rule 38-021 (1) (c) (i) Elevators, Conterweights, in accordance with CEC Rule 38-021 (1) (d) Escalators, in accordance with CEC Rule 38-021 (2) Lifts for persons with physical disabilities, in accordance with CEC Rule 38-021 (3) Theater installation, in accordance with CEC Rule 44-102 (1)

Listing / Certification

Certified. (3/8 inch size only). Conforms to CSA 22.2 No. 56 for use per CEC C22.1 Section 12-1000. Meets Federal Specification WW-C-566c Type II

Listed. (sizes 3/8 through 3 in.). Conforms to UL Standard ANSI/UL-1 for Flexible Metal Conduit.

Flexible metal conduit is also permitted for use on industrial machinery where temperatures exceed the limits of liquidtight flexible conduit. (ANSI/NFPA-79) Section 16.3.4 (exception) and Section 17.9.

Trade Size (in.)	Cat. No.	Inner Diameter				Outer Diameter			
		min.		max.		min.		max.	
		in.	(mm)	in.	(mm)	in.	(mm)	in.	(mm)
3/8	BR038*	0.375	(9.5)	0.393	(10.0)	0.560	(14.2)	0.610	(15.5)
1/2	BR050	0.625	(15.9)	0.645	(16.4)	0.860	(21.8)	0.920	(23.4)
3/4	BR075	0.812	(20.6)	0.835	(21.2)	1.045	(26.5)	1.105	(28.1)
1	BR100	1.000	(25.4)	1.040	(26.4)	1.300	(33.0)	1.380	(35.1)
1-1/4	BR125	1.250	(31.8)	1.300	(33.0)	1.550	(39.4)	1.630	(41.4)
1-1/2	BR150	1.500	(38.1)	1.575	(40.0)	1.850	(47.0)	1.950	(49.5)
2	BR200	2.000	(50.8)	2.080	(52.8)	2.350	(59.7)	2.454	(62.3)
2-1/2	BR250	2.500	(63.5)	2.700	(68.6)	2.860	(72.6)	3.060	(77.7)
3	BR300	3.000	(76.2)	3.200	(81.3)	3.360	(85.3)	3.560	(90.4)
3-1/2	BR350	3.500	(88.9)	-	-	3.860	(98.0)	4.060	(103.1)
4	BR400	4.000	(101.6)	-	-	4.360	(110.7)	4.560	(115.8)

* CSA Certified

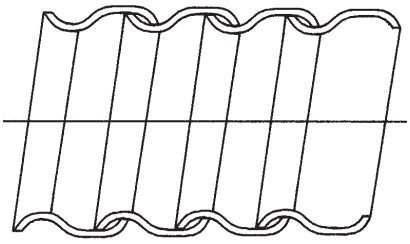

Types BR and ABR Strip Profile

Trade Size (in.)	Cat. No.	Coil Content (m)	Cat. No.	Coil Content (m)	Cat. No.	Coil Content (m)	Cat. No.	Coil Content (m)	Cat. No.	Coil Content (m)	Inside Bend Radius		Weight kg/30m
											(in.)	(mm)	
3/8	BR038-8*	8	BR038-15*	15	BR038-30*	30	BR038-75*	75	BR038-300*	300	2.0	(50.8)	18
1/2	BR050-8	8	BR050-15	15	BR050-30	30	-	-	BR050-300	300	3.0	(76.2)	13
3/4	BR075-8	8	BR075-15	15	BR075-30	30	-	-	BR075-150	150	4.0	(101.6)	15
1	-	-	BR100-15	15	-	-	-	-	BR100-120	120	5.0	(127.0)	24
1-1/4	-	-	BR125-15	15	-	-	-	-	BR125-120	120	6.2	(157.5)	29
1-1/2	-	-	BR150-8	8	-	-	-	-	BR150-90	90	7.5	(190.5)	36
2	-	-	BR200-8	8	-	-	-	-	BR200-45	45	10.0	(254.0)	45
2-1/2	-	-	BR250-8	8	-	-	-	-	-	-	12.5	(317.5)	68
3	-	-	BR300-8	8	-	-	-	-	-	-	15.0	(381.0)	82
3-1/2	-	-	BR350-8	8	-	-	-	-	-	-	17.5	(444.5)	100
4	-	-	BR400-8	8	-	-	-	-	-	-	20.0	(508.0)	122

* CSA Certified

Steel

Type SL



Trade Size		Cat. No.	Coil Content (m)	Inner Diameter				Outer Diameter				Min. Inside Bend Radius		Weight kg/30m
				min.		max.		min.		max.				
in.	(mm)			in.	(mm)	in.	(mm)	in.	(mm)	in.	(mm)	in.	(mm)	
-	-	SL316-75	75	0.172	(4.35)	0.202	(5.13)	0.280	(7.11)	0.310	(7.87)	0.75	(19.5)	2
-	-	SL140-75	75	0.235	(5.97)	0.265	(6.73)	0.328	(8.33)	0.358	(9.09)	0.75	(19.5)	3
5/16	-	SL516-75	75	0.297	(7.54)	0.327	(8.31)	0.391	(9.93)	0.421	(10.69)	0.75	(19.5)	3
-	-	SL380-75	75	0.360	(9.14)	0.390	(9.91)	0.485	(12.32)	0.515	(13.08)	1.00	(25.4)	4
-	-	SL716-75	75	0.422	(10.72)	0.452	(11.48)	0.547	(13.89)	0.577	(14.66)	1.00	(25.4)	4
3/8	16	SL038-75	75	0.492	(12.50)	0.512	(13.00)	0.617	(15.67)	0.637	(16.18)	1.00	(25.4)	5
-	-	SL916-45	45	0.547	(13.89)	0.577	(14.66)	0.672	(17.07)	0.702	(17.83)	1.25	(31.8)	5
1/2	-	SL050-45	45	0.622	(15.80)	0.642	(16.31)	0.747	(18.97)	0.767	(19.48)	1.50	(38.1)	7
-	20	SL050M-45	45	0.650	(16.51)	0.670	(17.01)	0.775	(19.69)	0.795	(20.19)	1.50	(38.1)	7
-	-	SL340-45	45	0.735	(18.67)	0.765	(19.43)	0.865	(21.97)	0.895	(22.73)	1.50	(38.1)	8
3/4	25	SL075-30	30	0.827	(21.00)	0.847	(21.51)	0.957	(24.31)	0.977	(24.82)	2.00	(50.8)	8
1	-	SL100-15	15	1.041	(26.44)	1.066	(27.07)	1.181	(30.00)	1.206	(30.63)	2.00	(50.8)	9
-	32	SL100M-15	15	1.102	(27.99)	1.122	(28.50)	1.242	(31.55)	1.262	(32.05)	2.00	(50.8)	-

Type SL

This “extra-flexible” product, available in the smaller diameters, is designed for tightspot installation and where continuous flexing is required of a steel wound hose.

Construction

Type SL is helically wound from a formed strip of Electrogalvanized steel. It is sized to be used with a variety of set-screw and clamp type fittings.

Applications

Offers good mechanical protection to wiring in a variety of O.E.M. applications

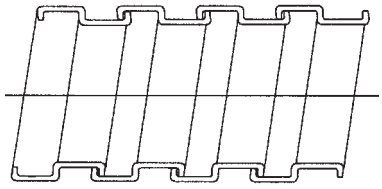

Squarelock

Type UG



Cat. No.	Coil Content (m)	Inside Diameter		Outer Diameter Min. Inside		Bend Radius		Wt. kg/30m
		Min.	Max.	Min.	Max.			
		in. (mm)	in. (mm)	in. (mm)	in. (mm)	in.	(mm)	
UG380-15	15	0.443(11.25)	0.473(12.01)	0.563(14.30)	0.593(15.06)	2.5	(63.5)	7
UG120-15	15	0.755(19.18)	0.785(19.94)	0.875(22.23)	0.905(22.99)	3.0	(76.2)	10
UG340-15	15	0.943(23.95)	0.973(24.71)	1.063(28.70)	1.093(27.76)	3.5	(89.0)	14
UG100-15	15	1.208(30.68)	1.238(31.45)	1.328(33.73)	1.358(34.50)	4.5	(114.3)	16
UG125-15	15	1.485(37.72)	1.515(38.48)	1.578(40.08)	1.608(40.84)	5.5	(139.7)	23
UG150-15	15	1.735(44.07)	1.765(44.83)	1.843(46.81)	1.873(47.57)	6.5	(165.1)	27
UG200-15	15	2.235(56.77)	2.265(57.53)	2.390(60.71)	2.420(61.47)	8.5	(216.0)	36
UG280-15	15	2.735(69.47)	2.765(70.23)	2.937(74.60)	2.967(75.36)	10.5	(267.0)	39
UG300-15	15	3.360(85.34)	3.390(86.11)	3.438(87.33)	3.468(88.09)	13.0	(330.2)	48

Note: Trade sizes do not apply to Type UG

Type UG

A fully-interlocked flexible steel conduit designed for high strength in “tight-spot” installations.

Construction

This conduit is manufactured from a bright tin plated steel strip which is fully interlocked at the edges to produce a strong, yet flexible product. The interlock feature does not allow the conduit to unravel if twisted and permits the conduit to retain its shape when bent. This lightweight product is compatible with many set-screw and clamp type fittings.

Applications

The bright appearance of the finished product lends itself to installations where the conduit may be visible after final assembly.

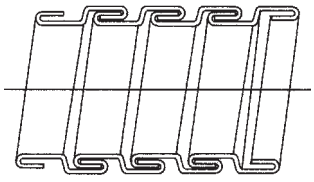

Interlock

Steel Core

Type USL



Cat. No.	Inner Dia.		Outer Dia.		Cat. No.	Coil Content (m)	Min. Inside Bend Radius		Wt. kg/30m
	Min.	Max.	Min.	Max.					
	in. (mm)	in. (mm)	in. (mm)	in. (mm)			in.	(mm)	
USL516	0.297(7.54)	0.327(8.30)	0.457(11.60)	0.487(12.37)	USL516-75	75	1.25	(31.75)	5
USL380	0.360(9.14)	0.390(9.91)	0.520(13.20)	0.550(13.97)	USL380-75	75	1.25	(31.75)	6
USL716	0.422(10.7)	0.452(11.48)	0.582(14.78)	0.612(15.54)	USL716-75	75	1.50	(38.10)	7
USL120	0.485(12.3)	0.515(13.08)	0.645(15.86)	0.675(17.15)	USL120-75	75	1.50	(38.10)	8
USL916	0.557(14.1)	0.577(14.65)	0.707(17.96)	0.737(18.72)	USL916-75	75	1.50	(38.10)	9

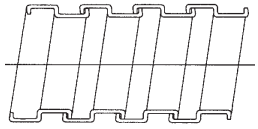

Squarelock — Type USL

Type USL

This extra-flexible steel conduit is recognized UL and CSA for use within listed and certified assemblies.

Construction

Helically formed from hot-dipped galvanized steel, type USL offers good corrosion resistance and provides excellent mechanical protection to enclosed circuits.

Applications

This product is intended as a factory installed component of various assemblies. Typical uses include modular office partitions, showcase lighting, range tops and other appliances. For component applications within Canada, ask for CSA Report #LO 4000-4875.

Listing / Certification

UL Recognized File #E53253

Type VJC — with PVC Jacket



Trade Size (in.)	Cat. No.	Carton Content* (m)	Outside Dia. Over Jacket				Internal Bend radius				Wt. kg/30m
			Min.		Max.		Min.		Max		
			in.	(mm)	in.	(mm)	in.	(mm)	in.	(mm)	
3/8	VJC038-30	30	0.647	(16.43)	0.677	(17.20)	1.0	(25.4)	5	(127.0)	5
1/2	VJC050-30	30	0.777	(19.74)	0.807	(20.50)	1.5	(38.1)	6	(152.4)	7
-	VJC050M-30	30	0.805	(20.45)	0.835	(21.21)	1.5	(38.1)	6	(152.4)	7
3/4	VJC075-30	30	0.987	(25.07)	1.017	(25.83)	2.0	(51.0)	10	(254.0)	9
1	VJC100-30	30	0.221	(5.61)	1.246	(31.65)	3.0	(76.0)	10	(254.0)	11
-	VJC100M-30	30	1.272	(32.31)	1.302	(33.07)	3.0	(76.0)	10	(254.0)	-

* Reels available, consult your Regional Sales Office

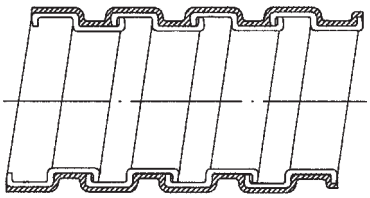

Type VJC

Vacuum jacketed steel conduit for high-flex installations

Construction

A unique vacuum extrusion process allows this product to have a thin PVC jacket which does not restrict the great flexibility characteristics of the inner core. The core material is the same as type SL. VJC is designed with dimensions that will accept standard liquid-tight fittings.

Applications

VJC is suitable for use in both static applications where a tight bend diameter is needed and in dynamic use such as machining centers and robotics.

Working Temperatures

-20°C to 80°C

Standard Colour

Black. Other colours available upon request. Consult your Regional Sales Office for details.

3F Condulet® Conduit Outlet Boxes With Covers

GUA Series

Cl. I, Div. 1 & 2, Groups B*, C, D
Cl. II, Div. 1, Groups E, F, G
Cl. II, Div. 2, Groups F, G
Cl. III
NEMA 3, 4, 7CD, 9EFG

Explosionproof
Dust-Ignitionproof
Raintight
Wet Locations

Applications:

GUA series conduit outlet boxes are installed within hazardous area conduit systems to:

- Protect conductors in threaded rigid conduit
- Act as pull and splice boxes
- Connect lengths of conduit
- Change conduit direction
- Provide access to conductors for maintenance and future system changes
- Act as mounting outlets for fixtures (with appropriate covers)
- Act as sealing fittings (with appropriate covers)

Features:

GUA conduit boxes have:

- Neoprene "O" ring standard to meet NEMA 4 requirements
- Cast ears on cover to permit easy removal and tightening
- Internal green ground screw
- Four standard mounting pads except for boxes with bottom hubs
- Threaded cover openings
- Ten different hub arrangements
- Taper threaded hubs to provide grounding continuity
- Smooth integral hub bushing protects conductor insulation when pulling
- Surface covers furnished with boxes
- Sealing covers, dome covers, and fixture hanger covers are available
- Cover threads are 12 pitch standard, 16 pitch on select aluminum shapes and sizes

Certifications and Compliances:

- NEC/CEC:
  - Class I, Division 1 & 2, Groups B*, C, D
  - Class II, Division 1, Groups E, F, G
  - Class II, Division 2, Groups F, G
  - Class III
- UL Standard: 1203
- ANSI Standard: C33.27
- CSA Standard: C22.2 No. 30
- NEMA/EEMAC 3, 4

Standard Materials:

- Bodies – *Feraloy* iron alloy
- Covers – Copper-free aluminum

Standard Finishes:

- *Feraloy* iron alloy – electrogalvanized and aluminum acrylic paint
- Aluminum – natural

Size Ranges:

- Hub – ½" to 2"
- Cover opening – 2" to 5" dia.

Options:

Description	Suffix
• Bodies – copper-free aluminum	**SA†**
• Covers – *Feraloy* iron alloy – electrogalvanized and aluminum acrylic paint	**WOD**
• GUA Form 6 (with 3" cover opening) are available with optional cover with viewing window	**VW**
• *Corro-free*™ epoxy powder coat	**S752**
• To order box less cover, add "0" to end of catalog number (i.e. GUAT260)	
• Factory installed terminal blocks mounted to DIN Rail (see page 53 for ordering information)	**DIN12-112**
• Factory installed terminal blocks directly mounted to outlet box (see page 53 for ordering information	**TB14-112**

When assembled with sealing type cover, GUA series outlet boxes provide adequate sealing for 40% fill in hazardous areas – Class I, Groups C, D; Class II, Groups E, F, G; and Class III. Seals can be made in either horizontal or vertical positions. Use *Chico*® "A" sealing compound or *Chico*® SpeedSeal only. Conductor splices or connections must not be made in enclosures where sealing compound is to be used per NEC.

GUA



Hub Size	Cover Opening Dia.	Cat. #
½	2	**GUA14**
¾	2	**GUA24**
½	3	**GUA16**
¾	3	**GUA26†***
1	3	**GUA36**
1¼	3⅝	**GUA47**
1½	5	**GUA59**

GUAC



Hub Size	Cover Opening Dia.	Cat. #
½	2	**GUAC14†**
¾	2	**GUAC24†**
½	3	**GUAC16†***
¾	3	**GUAC26†***
1	3	**GUAC36†***
1¼	3⅝	**GUAC47†**
1¼	5	**GUAC49†***
1½	5	**GUAC59†***
2	5	**GUAC69†***

3.1

†Available in copper-free aluminum, add suffix -SA.
*When ordered with suffix -SA are listed for Class I, Division 1 & 2, Groups B, C and D, Class II, Division 1, Groups E, F, G and Class III. Covers have 16 pitch threads. Replacement cover is a GUA06-GB.

GUAB



Hub Size	Cover Opening Dia.	Cat. #
½	2	**GUAB14†**
¾	2	**GUAB24**
½	3	**GUAB16†***
¾	3	**GUAB26†***
1	3	**GUAB36†***
1¼	3⅝	**GUAB47†**
1½	5	**GUAB59†***
2	5	**GUAB69†***

GUAD

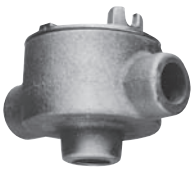

Hub Size	Cover Opening Dia.	Cat. #
½	2	**GUAD14**
¾	2	**GUAD24**
½	3	**GUAD16**
¾	3	**GUAD26†**
1	3	**GUAD36†**
1¼	5	**GUAD49**

Dimensions
In Inches:

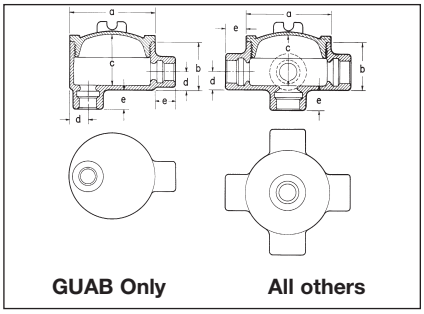

GUAB Only **All others**

GUA, GUAD, GUAM, GUAW, GUAX

Cat. #	a	b	c	d
14	2½	1 13/16	1¾	⅝
24	2½	2	2	¾
16	3½	2	1⅞	⅝
26	3½	2	1⅞	¾
36	3½	2 5/16	2 3/16	⅞
37	4¼	2 5/16	2⅜	⅞
47	4¼	2 11/16	2¾	1 3/32
49	5¾	3 13/16	3¾	1 3/32
59	5¾	3 13/16	3¾	1 9/32
69	5¾	4 1/16	4	1 9/16

Length of Hub Hub Size	Dimension "e" Length
½ - ¾	⅞
1 – 1¼	1
1½ – 2	1 1/16

 Copyright© 2015 Eaton's Crouse-Hinds Business

Crouse-Hinds by EATON

Condulet® Conduit Outlet Boxes With Covers

GUA Series

Cl. I, Div. 1 & 2, Groups B*, C, D
Cl. II, Div. 1, Groups E, F, G
Cl. II, Div. 2, Groups F, G
Cl. III
NEMA 3, 4, 7CD, 9EFG

Explosionproof
Dust-Ignitionproof
Raintight
Wet Locations

GUAL



Hub Size	Cover Opening Dia.	Cat. #
1/2	2	**GUAL14†**
3/4	2	**GUAL24†**
1/2	3	**GUAL16†***
3/4	3	**GUAL26†***
1	3	**GUAL36†***
1 1/4	3 5/8	**GUAL47†**
1 1/4	5	**GUAL49†***
1 1/2	5	**GUAL59†***
2	5	**GUAL69†***

GUAN



Hub Size	Cover Opening Dia.	Cat. #
1/2	2	**GUAN14**
3/4	2	**GUAN24**
1/2	3	**GUAN16**
3/4	3	**GUAN26**
1	3	**GUAN36**
1 1/4	3 5/8	**GUAN47**
1 1/2	5	**GUAN59**
2	5	**GUAN69**

GUAT



Hub Size	Cover Opening Dia.	Cat. #
1/2	2	**GUAT14†**
3/4	2	**GUAT24†**
1/2	3	**GUAT16†***
3/4	3	**GUAT26†***
1	3	**GUAT36†***
1	3 5/8	**GUAT37**
1 1/4	3 5/8	**GUAT47†**
1 1/4	5	**GUAT49†***
1 1/2	5	**GUAT59†***
2	5	**GUAT69†***

GUAX



Hub Size	Cover Opening Dia.	Cat. #
1/2	2	**GUAX14**
3/4	2	**GUAX24**
1/2	3	**GUAX16†***
3/4	3	**GUAX26†***
1	3	**GUAX36†***
1	3 5/8	**GUAX37†**
1 1/4	3 5/8	**GUAX47†**
1 1/4	5	**GUAX49†***
1 1/2	5	**GUAX59†***
2	5	**GUAX69†***

GUAM



Hub Size	Cover Opening Dia.	Cat. #
1/2	2	**GUAM14**
3/4	2	**GUAM24**
1/2	3	**GUAM16**
3/4	3	**GUAM26**
1	3	**GUAM36**
1 1/4	3 5/8	**GUAM47**
2	5	**GUAM69**

GUAW



Hub Size	Cover Opening Dia.	Cat. #
1/2	2	**GUAW14**
3/4	2	**GUAW24†**
1/2	3	**GUAW16**
3/4	3	**GUAW26†***

Dimensions

GUAC, GUAT

Cat. #	a	b	c	d
14	2 1/2	2 1/4	2 3/16	5/8
24	2 1/2	2	2	3/4
16	3 1/2	2	1 7/8	5/8
26	3 1/2	2	1 7/8	3/4
36	3 1/2	2 5/16	2 3/16	7/8
37	4 1/4	2 5/16	2 3/8	7/8
47	4 1/4	2 11/16	2 3/4	1 3/32
49	5 3/4	3 13/16	3 3/4	1 5/32
59	5 3/4	3 13/16	3 3/4	1 9/32
69	5 3/4	4 1/16	4	1 9/16

GUAN

Cat. #	a	b	c	d
14	2 1/2	2 1/8	2 1/16	5/8
24	2 1/2	2 5/16	2 1/4	3/4
16	3 1/2	2	1 7/8	3/4
26	3 1/2	2	1 7/8	3/4
36	3 1/2	2 5/16	2 3/8	7/8
47	4 1/4	2 11/16	2 3/4	1 3/32
59	5 3/4	4 1/16	4	1 9/32
69	5 3/4	4 1/16	4	1 9/16

GUAB, GUAL

Cat. #	a	b	c	d
14	2 1/2	2 1/4	2 3/16	5/8
24	2 1/2	2 1/2	2 7/16	3/4
16	3 1/2	2	1 7/8	5/8
26	3 1/2	2	1 7/8	3/4
36	3 1/2	2 5/16	2 3/16	7/8
47	4 1/4	2 11/16	2 3/4	1 3/32
49	5 3/4	3 13/16	3 3/4	1 5/32
59	5 3/4	3 13/16	3 3/4	1 9/32
69	5 3/4	4 1/16	4	1 9/16

†Available in copper-free aluminum, add suffix -SA.
*When ordered with suffix -SA are listed for Class I, Division 1 & 2, Groups B, C and D, Class II, Division 1, Groups E, F, G and Class III. Covers have 16 pitch threads. Replacement cover is a GUA06-GB.

www.crouse-hinds.com US: 1-866-764-5454 CAN: 1-800-265-0502 Copyright© 2015 Eaton's Crouse-Hinds Business

For GUA Condulet® Conduit Outlet Boxes

Applications:

Threaded covers, canopies and extensions are used:

- To provide a seal in hazardous areas (sealing cover). See note below.
- To mount pendant lighting fixtures such as EVA listed in lighting section (fixture canopy)
- To mount EVA pendant lighting fixtures on cover which is then screwed into outlet box without twisting conductors (union hub cover)
- To mount pendant lighting fixtures on cover which is then screwed into outlet box as above, for wiring after fixture stem is installed (nipple cover)
- To provide means of increasing outlet box depth (threaded extension)

Features:

- Surface covers are supplied with GUA boxes
- Sealing cover has removable plug for filling enclosure with sealing compound after installation. Sealing cover meets 40% fill requirement of the NEC®. See note below.
- Fixture canopy has a threaded cover in its side to provide access for making splices or taps. Fixture with its conduit stem and canopy can be assembled and wired before installation and conductors can be spliced in canopy after it has been screwed into the body
- Cover threads are 12 pitch.

Standard Materials:

- Surface and dome covers, union hub covers, nipple covers – copper-free aluminum
- Sealing covers, fixture canopies, threaded extensions – *Feraloy*® iron alloy

Standard Finishes:

- Aluminum – natural
- *Feraloy* iron alloy – electrogalvanized and aluminum acrylic paint

Options:

Description	Suffix
Corro-free™ epoxy powder coat	**S752**
To order an iron surface cover	**WOD**

Size Ranges:

- Fixture stems – ¾"
- Body openings – 2" to 5"

Note: Depth of sealing compound in body must satisfy requirements of NEC section 501.15(C)(3). Splices and taps in sealing fittings are prohibited by NEC.

GUA Threaded Extension



Cover Opening Dia.	Ext. Depth	Cat. #
3	1¼	**GUA0631**

GUA Cover Opening	Replacement O-Ring Gasket Cat. #
2"	**GASK1713**
3"	**GASK1151**
3⅝"	**GASK1589**
5"	**GASK925**

Surface Cover



Cover Opening Dia.	Thread Pitch	Cat. #
2	12	**GUA04**
3	12	**GUA06**
3	16	**GUA06 GB***
3⅝	12	**GUA07**
5	12	**GUA09**
5	16	**GUA09 GB***

Dome Cover



Cover Opening Dia.	Ext. Depth	Thread Pitch	Cat. #
2	2	12	**GUA047**
3	2	12	**GUA067**
3⅝	2	12	**GUA077**
3⅝	4	12	**GUA0716**
5	4	12	**GUA514**
5	10	12	**GUA5110**

Sealing Cover



Cover Opening Dia.	Thread Pitch	Cat. #
2	12	**GUA041**
3	12	**GUA062**
3	16	**GUA062 GB***
3⅝	12	**GUA072**
5	12	**GUA092**

Nipple Cover



Cover Opening Dia.	Fixt. Stem Size	Thread Pitch	Cat. #
3	¾	12	**GUA0672**

Fixture Cover
Union Hub Type



Cover Opening Dia.	Fixt. Stem Size	Thread Pitch	Cat. #
3	¾	12	**GUA0687**

Fixture Canopy



Cover Opening Dia.	Fixt. Stem Size	Thread Pitch	Cat. #
3	¾	12	**GUA068**

†Also used with GUP bodies see page 753 or GU and GUE bodies see page 722.
GUA covers with suffix "GB" are used with Group B rated GUA aluminum bodies identified with symbols † on pages 50-51.

 Copyright© 2015 Eaton's Crouse-Hinds Business

Factory Installed Terminal Block Ordering Guide

For GUA Condulet® Conduit Outlet Boxes

DIN Rail Mounted Terminal Blocks:

Electrical Specifications:
30 Amp, 150V, AWG 26-10

Cat. #	Description
DIN12	DIN Rail Mounted, 2 Terminal Blocks GUA (Shapes C, L, N, T, X) Form 4 & 6 Cover Dia. Openings
DIN13	DIN Rail Mounted, 3 Terminal Blocks GUA (Shapes C, L, N, T, X) Form 4 & 6 Cover Dia. Openings
DIN14	DIN Rail Mounted, 4 Terminal Blocks GUA (Shapes C, L, N, T, X) Form 6, 7 & 9 Cover Dia. Openings
DIN16	DIN Rail Mounted, 6 Terminal Blocks GUA (Shapes C, L, N, T, X) Form 7 & 9 Cover Dia. Openings
DIN18	DIN Rail Mounted, 8 Terminal Blocks GUA (Shapes C, L, N, T, X) Form 7 & 9 Cover Dia. Opening
DIN 112	DIN Rail Mounted, 12 Terminal Blocks GUA (Shapes C, L, T, X) Form 9 Cover Dia. Opening

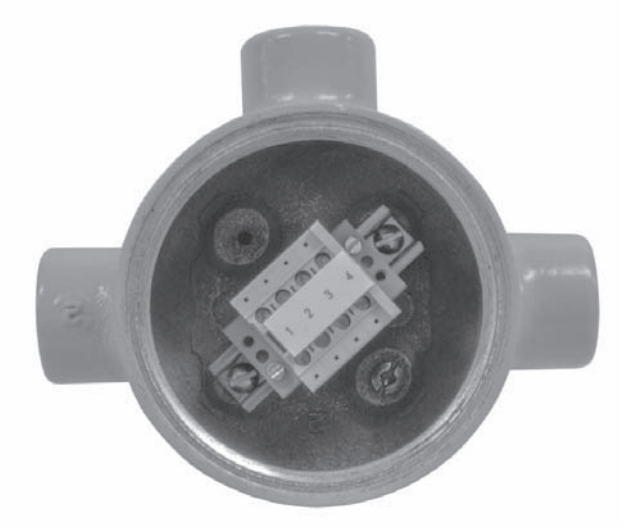

Direct Mounted Terminal Blocks:

Electrical Specifications:
30 Amp, 300V, AWG 26-10

Cat. #	Description
TB14	Direct Mounted Terminal Block, 4 Poles GUA (Shapes C, L, T, X) Form 6, 7 & 9 Cover Dia. Openings
TB16	Direct Mounted Terminal Block, 6 Poles GUA (Shapes C, L, T, X) Form 6, 7 & 9 Cover Dia. Openings
TB18	Direct Mounted Terminal Block, 4 Poles (8 Total) GUA (Shapes C, L, T, X) Form 7 & 9 Cover Dia. Opening
TB112	Direct Mounted Terminal Block, 12 Poles GUA (Shapes C, L, T, X) Form 9 Cover Dia. Opening

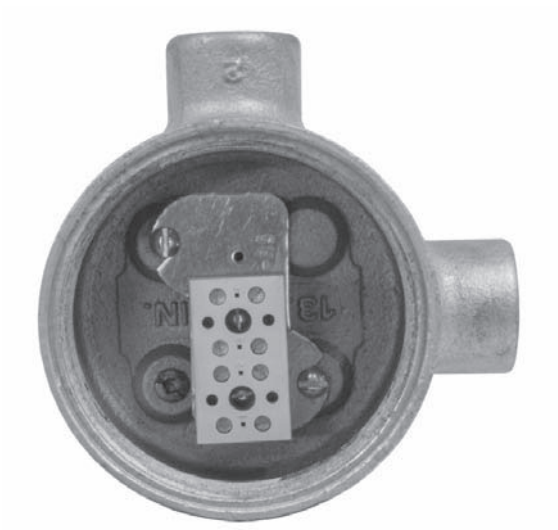

www.crouse-hinds.com US: 1-866-764-5454 CAN: 1-800-265-0502 Copyright© 2015 Eaton's Crouse-Hinds Business



Spec-Kon®

Overview M2
Catalog Numbering System M2
Terminals
Features and Benefits M3
Performance Requirements M4
Ring Terminals M5-M7
Multiple Stud Ring Terminals M8-M9
Large Ring Terminals M10-M12
Fork Terminals M13-M15
Locking Fork Terminals M16-M17
Flanged Fork Terminals M18-M19
Blade Terminals M20
Pin Terminals M21
Disconnects
Features and Benefits M22
Design Features M22
Performance Requirements M22
Female Disconnects 23-24
Male Disconnects M25
Piggy Back Disconnects M26
Fully Insulated Female Disconnects M27-M28
Fully Insulated Male Disconnects M28
Insulated Female Flag Disconnects M29
Insulated Barrel Flag Female Disconnects M29
Bullet Receptacles M30
Bullet Disconnects M31
Splices, Wire Joints and Quick Splices
Features and Benefits M32
Butt Splices M33-M34
Wire Joints M34
Quick Splices M34
Installation Tools
Hand Tools M35-M37
Automated Tools M38-M39
Power Operated Tools M40-M41
Application Information
Tool & Die Selection Chart M42
Strip Length Chart M42
Stud Size Chart M43
Common Conductor Size Chart M43

M

Thomas&Betts



Crimp Terminals, Disconnects, and Splices

Thomas & Betts is pleased to introduce Spec-Kon® crimp terminals, disconnects, and splices. Ideal for OEM applications, the Spec-Kon® line can be used anywhere a high number of terminations are required every day, such as the wiring harness, panelboard, telecommunications, and automotive industries.

The Spec-Kon® terminal offering includes:

- A broad selection of bulk-packaged loose piece terminals in non-insulated and insulated varieties, including male and female disconnects, rings, forks, pins, blades, butt splices, wire joints and bullet connectors.
- Terminals on mylar tape for automated applications, including the new KT-2500 power tool for frequent, repeated crimps.
- The ERG-2500 ergonomic hand tool, which crimps all sizes of insulated barrel-style Spec-Kon® wire termination products.

Catalog Numbering System

Example: KV18-6R-M

K	V	18	6	R	M
Product	**Terminal and Insulation**	**Wire Size Range**	**Feature Size**	**Terminal Type**	**Box Quantity**
Thomas & Betts Spec-Kon® Terminals	(Blank) Bare Non-Insulated (V) Vinyl Funnel Entry (N) Nylon Funnel Entry (VF) Vinyl Fully Insulated (NF) Nylon Fully Insulated	(18) 22-16 AWG (14) 16-14 AWG (10) 12-10 AWG (8) 8 AWG (6) 6 AWG (4) 4 AWG (2) 2 AWG	**Bolt Hole:** Ring and Fork Terminals **Tab Width:** (250 Series) Disconnects **Pin Length:** Pin Terminals **Blade Length:** Blade Terminals **Diameter:** Bullets	(R) Ring (MS) Multiple Stud Ring (F) Fork (LF) Locking Fork (FF) Flanged Fork (PT) Pin Terminal (BL) Blade Terminal (MD) Male Disconnect (FD) Female Disconnect (FFD) Female Flag Disconnect (PD) Piggy Back Disconnect (FB) Female Bullet (MB) Male Bullet (BS) Butt Splice (QS) Quick Splice (WJ) Wire Joint (Closed End) (BFD) Barrel Flag Disconnect	(C) = 100 (CC) = 200 (W) = 250 (D) = 500 (M) = 1,000 (T) = Mylar Tape* * Please contact Customer Service for pricing and availability.

© 2002 Thomas & Betts Corporation. Specifications are subject to change without notice. www.tnb.com



Features and Benefits of Spec-Kon® Terminals

- *Internal barrel serrations*—During crimping, the wire will cold flow into serrations, giving lower resistance connections and improving tensile strength.
- *Size marking*—Wire range is stamped on the tongue (metric and English) for easy access to the terminal size without drawings/packaging.
- *Electro tin plating*—Provides excellent corrosion resistance, superior finish for better-looking installation.
- *Ergonomic hand tool*—Ergonomically designed ERG-2500 completes a UL listed crimp while requiring substantially lower handle forces.
- *One tool for all insulated products*—Thomas & Betts offers a single tool that crimps the entire range of standard insulated terminals, disconnects, and butt splices. Many competitors require 2 to 4 tools to cover the same range.
- *Color coding*—Insulators are color coded for specific wire size (red=22-16AWG, blue=16-14AWG, yellow=12-10AWG). Red=8AWG, blue=6AWG.

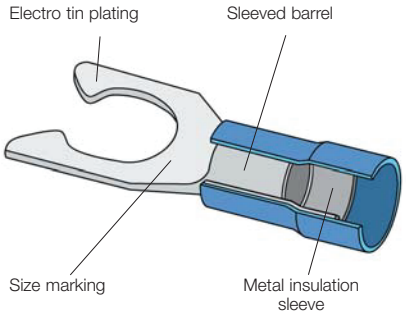

Nylon Insulated Terminals

- *Sleeved barrel*—Ensures barrel does not separate during crimping.
- *Molded insulators*—Molded insulators ensure consistent shape and quality, shaped entry speeds installation and reduces wire hang up.
- *Metal insulation sleeve*—Sleeve crimps wire insulation, providing high-vibration resistance and conductor strain relief.
- *Nylon material*—Ideal for harsh environments. Provides excellent chemical, impact and abrasion resistance.
- *Ratings*—UL Listed, cULus Listed, CSA, 600 V at 105ºC.

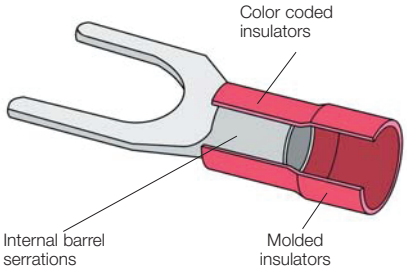

Vinyl Insulated Terminals

- *Brazed seam*—Ensures barrel does not separate during crimping.
- *Molded funnel entry insulators*—Funnel entry speeds installation and reduces wire hang up. Molded insulators ensure consistent shape and quality every time.
- *Insulation crimp*—The insulator mouth is flared to speed installation and accommodate thicker insulated wires. Also, provides insulation support strain relief in high-vibration applications.
- *Vinyl material*—Economical, moisture resistant and flame retardant (UL94V-0)
- *Ratings*—UL Listed, cULus Listed, CSA, 600 V at 105ºC.

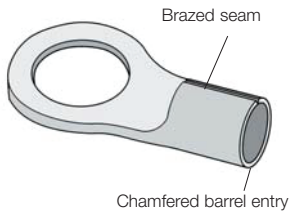

Non-Insulated Terminals

- *Brazed seam*—Ensures barrel does not separate during crimping.
- *Chamfered barrel entry*—Smoothing the barrel entry edge facilitates wire insertion.
- *Ratings*—UL Listed, cULus Listed, CSA, 2000 V.

© 2002 Thomas & Betts Corporation. Specifications are subject to change without notice.

Design Features of Spec-Kon® Terminals

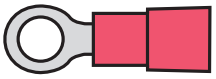

Rings
Provides the most secure and reliable connection available

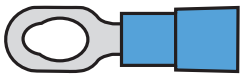

Multiple-Stud Rings
Special tongue style that accommodates 3 stud sizes with one terminal

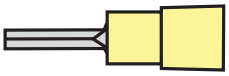

Pins
Standard insulation-style terminals for use on DIN-style/metric terminal blocks

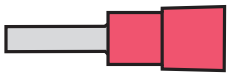

Blades
Standard insulation-style terminals for use on DIN-style/metric terminal blocks

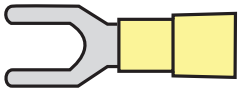

Forks
Fast and easy to install without removing the terminal block screw

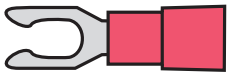

Locking Forks
Offers the secure connection of a ring terminal with the fast and easy installation of a fork terminal

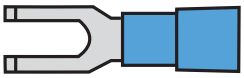

Flanged Forks
Turned-up toes provide secure connections in high-vibration applications

Performance Requirements

Description	Wire Size (AWG)										
	#22	#20	#18	#16	#14	#12	#10	#8	#6	#4	#2
U.L. 486A (Terminals)											
Test Current for Max. 50˚C Rise (Amps)	9	12	17	18	30	35	50	70	95	125	70
Min. Tensile Strength* (Lbs.)	8	13	20	30	50	70	80	90	100	140	180

*** Pull-out force of the crimped terminal.**

Applicable Spec-Kon® products meet or exceed the following test specifications:

- UL486A (Terminals)
- CSA
- UL486C (Splices)

UL listed products are shown with the applicable logos in the product section.

UL file #E9809 (Terminals).

CSA file #LR4503

© 2002 Thomas & Betts Corporation. Specifications are subject to change without notice. **www.tnb.com**



- Metal Insulation Sleeve
- Molded Insulator
- Internal Barrel Serrations
- Funnel Entry

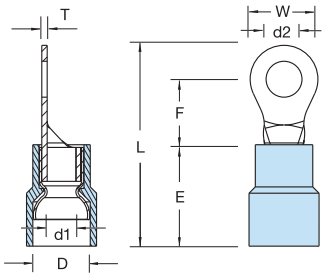

Nylon Insulated Ring Terminals

Catalog Number	Wire Range	Bolt Size (d2)		Dimension inch mm						
				W	F	L	E	D	d1	T
KN18-6R-M	22-16 A.W.G. 0.5-1.5 mm²	#6	.146 3.7	.260 6.6	.248 6.3	.803 20.4	.433 11.0	.177 4.5	.067 1.7	.030 0.75
KN18-8R-M		#8	.169 4.3	.260 6.6	.248 6.3	.803 20.4				
KN18-10R-M		#10	.209 5.3	.315 8.0	.276 7.0	.858 21.8				
KN18-14R-M		1/4	.252 6.4	.457 11.6	.433 11.0	1.094 27.8				
KN18-516R-M		5/16	.331 8.4	.457 11.6	.433 11.0	1.094 27.8				
KN14-6R-M	16-14 A.W.G. 1.5-2.5 mm²	#6	.146 3.7	.260 6.6	.248 6.3	.8.3 20.4	.433 11.0	.205 5.2	.091 2.3	.031 0.8
KN14-8R-M		#8	.169 4.3	.260 6.6	.248 6.3	.803 20.4				
KN14-10R-M		#10	.209 5.3	.335 8.5	.307 7.8	.898 22.8				
KN14-14R-M		1/4	.252 6.4	.472 12.0	.433 11.0	1.094 27.8				
KN14-516R-M		5/16	.331 8.4	.472 12.0	.433 11.0	1.094 27.8				
KN14-38R-M		3/8	.413 10.5	.535 13.6	.547 13.9	1.240 31.5				
KN10-6R-D	12-10 A.W.G. 4-6 mm²	#6	.146 3.7	.283 7.2	.240 6.1	.894 22.7	.512 13.0	.276 7.0	.134 3.4	.039 1.0
KN10-8R-D		#8	.169 4.3	.283 7.2	.240 6.1	.894 22.7				
KN10-10R-D		#10	.209 5.3	.374 9.5	.358 9.1	1.047 26.6				
KN10-14R-D		1/4	.252 6.4	.472 12.0	.413 10.5	1.164 29.5				
KN10-516R-D		5/16	.331 8.4	.591 15.0	.531 13.5	1.339 34.0				
KN10-38R-D		3/8	.413 10.5	.591 15.0	.531 13.5	1.339 34.0				
KN10-12R-D		1/2	.512 13.0	.756 19.2	.630 16.0	1.520 38.6				

Box Quantity: (D)=500; (M)=1000
For Mylar Tape replace box quantity with (T). Example: KN18-6R-T
UL File #E9809
CSA File #LR4503

See pages in back of catalog for complete tool information.
Tool and Die Selection Chart on page M42.

Maximum Electrical Rating: 105°C 600 Volts Max.
Terminal Material: Copper

Tools used with Nylon Insulated Ring Terminals



ERG2500



KT-2500

For complete information regarding tools and the new Universal Applicator, see pages M35-M41.

© 2002 Thomas & Betts Corporation. Specifications are subject to change without notice.



- Molded Funnel Entry Insulator
- Brazed Seam
- Internal Barrel Serrations

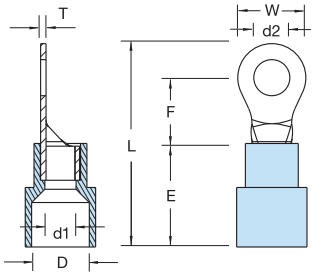

Vinyl Insulated Ring Terminals

Catalog Number	Wire Range	Bolt Size (d2)		Dimension inch mm						
				W	F	L	E	D	d1	T
KV18-6R-M	22-16 A.W.G. 0.5-1.5 mm²	#6	.146 3.7	.260 6.6	.248 6.3	.803 20.4	.433 11.0	.157 4.0	.067 1.7	.030 0.75
KV18-8R-M		#8	.169 4.3	.260 6.6	.248 6.3	.803 20.4				
KV18-10R-M		#10	.209 5.3	.315 8.0	.276 7.0	.858 21.8				
KV18-14R-M		1/4	.252 6.4	.457 11.6	.433 11.0	1.094 27.8				
KV18-516R-M		5/16	.331 8.4	.457 11.6	.433 11.0	1.094 27.8				
KV18-38R-M		3/8	.413 10.5	.835 13.6	.547 13.9	1.240 31.5				
KV14-6R-M	16-14 A.W.G. 1.5-2.5 mm²	#6	.146 3.7	.260 6.6	.248 6.3	.803 20.4	.433 11.0	.177 4.5	.091 2.3	.031 0.8
KV14-8R-M		#8	.169 4.3	.260 6.6	.248 6.3	.803 20.4				
KV14-10R-M		#10	.209 5.3	.335 8.5	.307 7.8	.898 22.8				
KV14-14R-M		1/4	.252 6.4	.472 12.0	.433 11.0	1.094 27.8				
KV14-516R-M		5/16	.331 8.4	.472 12.0	.433 11.0	1.094 27.8				
KV14-38R-M		3/8	.413 10.5	.535 13.6	.547 13.9	1.240 31.5				
KV10-6R-D	12-10 A.W.G. 4-6 mm²	#6	.146 3.7	.283 7.2	.240 6.1	.894 22.7	.512 13.0	.252 6.4	.134 3.4	.039 1.0
KV10-8R-D		#8	.169 4.3	.283 7.2	.240 6.1	.894 22.7				
KV10-10R-D		#10	.209 5.3	.374 9.5	.358 9.1	1.047 26.6				
KV10-14R-D		1/4	.252 6.4	.472 12.0	.413 10.5	1.161 29.5				
KV10-516R-D		5/16	.331 8.4	.591 15.0	.531 13.5	1.339 34.0				
KV10-38R-D		3/8	.413 10.5	.591 15.0	.531 13.5	1.339 34.0				
KV10-12R-D		1/2	.512 13.0	.756 19.2	.630 16.0	1.520 38.6				

Box Quantity: (D)=500; (M)=1000
For Mylar Tape replace box quantity with (T). Example: KV18-6R-T
UL File #E9809
CSA File #LR4503

See pages in back of catalog for complete tool information.
Tool and Die Selection Chart on page M42.

Maximum Electrical Rating: 105°C 600 Volts Max.
Terminal Material: Copper

Tools used with Vinyl Insulated Ring Terminals



ERG2500



KT-2500

Thomas&Betts

© 2002 Thomas & Betts Corporation. Specifications are subject to change without notice. **www.tnb.com**

Non-Insulated Ring Terminals



- Chamfered Barrel
- Brazed Seam
- Internal Barrel Serrations

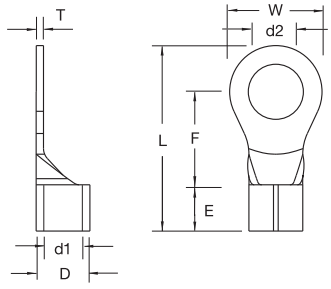

Catalog Number	Wire Range	Bolt Size (d2)		Dimension inch mm						
				W	F	L	E	D	d1	T
K18-6R-M	22-16 A.W.G. 0.5-1.5 mm²	#6	.146 3.7	.260 6.6	.248 6.3	.567 14.4	.189 4.8	.134 3.4	.067 1.7	.030 0.75
K18-8R-M		#8	.169 4.3	.260 6.6	.248 6.3	.567 14.4				
K18-10R-M		#10	.209 5.3	.315 8.0	.276 7.0	.622 15.8				
K18-14R-M		1/4	.252 6.4	.457 11.6	.433 11.0	.858 21.8				
K18-516R-M		5/16	.331 8.4	.457 11.6	.433 11.0	.858 21.8				
K14-6R-M	16-14 A.W.G. 1.5-2.5 mm²	#6	.146 3.7	.260 6.6	.248 6.3	.567 14.4	.189 4.8	.161 4.1	.091 2.3	.031 0.8
K14-8R-M		#8	.169 4.3	.260 6.6	.248 6.3	.567 14.4				
K14-10R-M		#10	.209 5.3	.335 8.5	.307 7.8	.661 16.8				
K14-14R-M		1/4	.252 6.4	.472 12.0	.433 11.0	.858 21.8				
K14-516R-M		5/16	.331 8.4	.472 12.0	.433 11.0	.858 21.8				
K14-38R-M		3/8	.413 10.5	.535 13.6	.547 13.9	1.004 25.5				
K10-6R-M	12-10 A.W.G. 4-6 mm²	#6	.146 3.7	.283 7.2	.240 6.1	.618 15.7	.236 6.0	.220 5.6	.134 3.4	.039 1.0
K10-8R-M		#8	.169 4.3	.283 7.2	.240 6.1	.618 15.7				
K10-10R-M		#10	.209 5.3	.374 9.5	.358 9.1	.772 19.6				
K10-14R-M		1/4	.252 6.4	.472 12.0	.413 10.5	.886 22.5				
K10-516R-M		5/16	.331 8.4	.591 15.0	.531 13.5	1.063 27.0				
K10-38R-M		3/8	.413 10.5	.591 15.0	.531 13.5	1.063 27.0				
K10-12R-D		1/2	.512 13.0	.756 19.2	.630 16.0	1.244 31.6				

Box Quantity: (D)=500; (M)=1000
For Mylar Tape replace box quantity with (T). Example: K18-6R-T
UL File #E9809
CSA File #LR4503

See pages in back of catalog for complete tool information.
Tool and Die Selection Chart on page M42.

Terminal Material: Copper

Tools used with Non-Insulated Ring Terminals



ERG2002



KT-2500

Thomas&Betts

© 2002 Thomas & Betts Corporation. Specifications are subject to change without notice. **www.tnb.com**

Nylon Insulated Multiple Stud Ring Terminals



Catalog Number	Wire Range	Bolt Size	Dimension inch mm						
			W	F	L	E	D	d1	T
KN18-610MS-M	22-16 A.W.G. 0.5-1.5 mm²	#6 - #10	.339 8.6	.311 7.9	.996 25.3	.433 11.0	.177 4.5	.067 1.7	.030 0.75
KN14-610MS-M	16-14 A.W.G. 1.5-2.5 mm²	#6 - #10	.339 8.6	.311 7.9	.996 25.3	.433 11.0	.205 5.2	.091 2.3	.031 0.8
KN10-610MS-D	12-10 A.W.G. 4-6 mm²	#6 - #10	.390 9.9	.350 8.9	1.154 29.3	.512 13.0	.276 7.0	.134 3.4	.039 1.0

- Single terminal for 6, 8, and 10 stud sizes
- Molded Insulator
- Metal Insulation Sleeve
- Funnel Entry

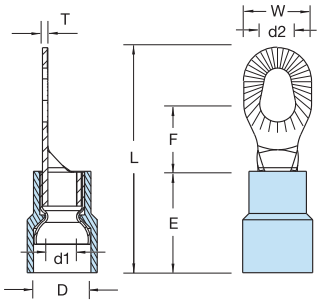

Box Quantity: (D)=500; (M)=1000
For Mylar Tape replace box quantity with (T). Example: KN18-610MS-T
UL File #E9809
CSA File #LR4503

See pages in back of catalog for complete tool information.
Tool and Die Selection Chart on page M42.

Maximum Electrical Rating: 105°C 600 Volts Max.
Terminal Material: Copper

Vinyl Insulated Multiple Stud Ring Terminals



Catalog Number	Wire Range	Bolt Size	Dimension inch mm						
			W	F	L	E	D	d1	T
KV18-610MS-M	22-16 A.W.G. 0.5-1.5 mm²	#6 - #10	.339 8.6	.311 7.9	.996 25.3	.433 11.0	.157 4.0	.067 1.7	.030 0.75
KV14-610MS-M	16-14 A.W.G. 1.5-2.5 mm²	#6 - #10	.339 8.6	.311 7.9	.996 25.3	.433 11.0	.177 4.5	.091 2.3	.031 0.8
KV10-610MS-D	12-10 A.W.G. 4-6 mm²	#6 - #10	.390 9.9	.350 8.9	1.154 29.3	.512 13.0	.252 6.4	.134 3.4	.039 1.0

- Single terminal for 6, 8, and 10 stud sizes
- Molded Funnel Entry Insulator
- Brazed Seam

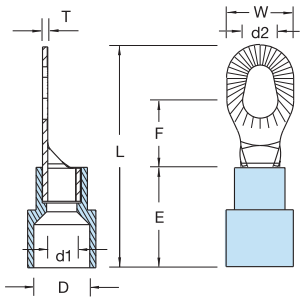

Box Quantity: (D)=500; (M)=1000
For Mylar Tape replace box quantity with (T). Example: KV18-610MS-T
UL File #E9809
CSA File #LR4503

See pages in back of catalog for complete tool information.
Tool and Die Selection Chart on page M42.

Maximum Electrical Rating: 105°C 600 Volts Max.
Terminal Material: Copper

Tools used with Nylon and Vinyl Insulated Multiple Stud Ring Terminals



ERG2500



KT-2500

Thomas&Betts

© 2002 Thomas & Betts Corporation. Specifications are subject to change without notice. www.tnb.com



Non-Insulated Multiple Stud Ring Terminals

Catalog Number	Wire Range	Bolt Size	Dimension inch mm						
			W	F	L	E	D	d1	T
K18-610MS-M	22-16 A.W.G. 0.5-1.5 mm²	#6 - #10	.339 8.6	.311 7.9	.768 19.5	.189 4.8	.134 3.4	.067 1.7	.030 0.75
K14-610MS-M	16-14 A.W.G. 1.5-2.5 mm²	#6 - #10	.339 8.6	.311 7.9	.768 19.5	.189 4.8	.161 4.1	.091 2.3	.031 0.8
K10-610MS-M	12-10 A.W.G. 4-6 mm²	#6 - #10	.390 9.9	.350 8.9	.886 22.5	.236 6.0	.220 5.6	.134 3.4	.039 1.0

- Single terminal for 6, 8, and 10 stud sizes
- Brazed Seam
- Chamfered Barrel
- Internal Barrel Serrations

Box Quantity: (M)=1000
For Mylar Tape replace box quantity with (T). Example: K18-610MS-T
UL File #E9809
CSA File #LR4503

Terminal Material: Copper

See pages in back of catalog for complete tool information.
Tool and Die Selection Chart on page M42.

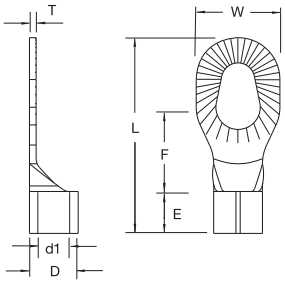

Tools used with Non-Insulated Multiple Stud Ring Terminals



ERG2002



KT-2500

© 2002 Thomas & Betts Corporation. Specifications are subject to change without notice.



- Brazed Seam
- Molded Funnel Entry Insulator
- Internal Barrel Serrations

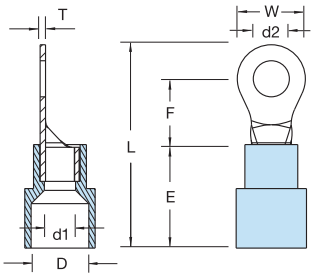

Nylon Insulated Large Ring Terminals

Catalog Number	Wire Range	Bolt Size (d2)		Dimension inch mm						
				W	F	L	E	D	d1	T
KN8-8R-D	8 A.W.G. 8 mm²	#8	.169 4.3	.315 8.0	.366 9.3	1.142 29.0	.630 16.0	.315 8.0	.177 4.5	.047 1.2
KN8-10R-D		#10	.209 5.3	.364 8.8	.429 10.9	1.232 31.3				
KN8-14R-D		1/4	.252 6.4	.472 12.0	.366 9.3	1.232 31.3				
KN8-516R-D		5/16	.331 8.4	.591 15.0	.543 13.8	1.469 37.3				
KN8-38R-D		3/8	.413 10.5	.591 15.0	.543 13.8	1.469 37.3				
KN8-12R-D		1/2	.512 13.0	.787 20.0	.591 15.0	1.614 41.0				
KN6-10R-W	6 A.W.G. 14 mm²	#10	.209 5.3	.472 12.0	.524 13.3	1.606 40.8	.846 21.5	.433 11.0	.228 5.8	.059 1.5
KN6-14R-W		1/4	.252 6.4							
KN6-516R-W		5/16	.331 8.4	.630 16.0	.559 14.2	1.713 43.5				
KN6-38R-W		3/8	.413 10.5							
KN6-12R-W		1/2	.512 13.0	.866 22.0	.780 19.8	2.047 52.0				

Box Quantity: (W)=250; (D)=500
For mylar tape, replace box quantity with (T). Example: KN8-8R-T.

See pages in back of catalog for complete tool information.
Tool and Die Selection Chart on page M42.

Maximum Electrical Rating: 105°C 600 Volts Max.
Terminal Material: Copper

#8 AWG on mylar tape is UL Listed.
#6 AWG on mylar tape is UL Listed.

UL File #E9809
CSA File #LR4503

M
Spec-Kon®

Tools used with Nylon Insulated Large Ring Terminals



TBM6S

For tooling information for nylon insulated large ring terminals, see page M37.



KT-2500

© 2002 Thomas & Betts Corporation. Specifications are subject to change without notice.



- Brazed Seam
- Chamfered Barrel
- Internal Barrel Serrations

Non-Insulated Large Ring Terminals

Catalog Number	Wire Range	Bolt Size (d2)		Dimension inch mm						
				W	F	L	E	D	d1	T
K8-8R-D	8 A.W.G. 8 mm²	#8	.169 4.3	.315 8.0	.366 9.3	.846 21.5	.337 8.5	.283 7.2	.177 4.5	.047 1.2
K8-10R-D		#10	.209 5.3	.346 8.8	.429 10.5	.937 23.8				
K8-14R-D		1/4	.252 6.4	.472 12.0	.366 9.3	.937 23.8				
K8-516R-D		5/16	.331 8.4	.591 15.0	.543 13.8	1.161 29.8				
K8-38R-D		3/8	.413 10.5	.591 15.0	.543 13.8	1.161 29.8				
K8-12R-D		1/2	.512 13.0	.787 20.0	.591 15.0	1.319 33.5				
K6-10R-D	6 A.W.G. 14 mm²	#10	.209 5.3	.472 12.0	.524 13.3	1.173 29.8	.413 10.5	.354 9.0	.228 5.85	.059 1.5
K6-14R-D		1/4	.252 6.4	.472 12.0	.524 13.3	1.173 29.8				
K6-516R-D		5/16	.331 8.4	.630 16.0	.559 14.2	1.280 32.5				
K6-38R-D		3/8	.413 10.5	.630 16.0	.559 14.2	1.280 32.5				
K6-12R-W		1/2	.512 13.0	.866 22.0	.780 19.8	1.614 41.0				
K4-8R-W*	4 A.W.G. 22 mm²	#8	.169 4.3	.481 12.2	.594 15.1	1.307 33.2	.472 12.0	.453 11.5	.303 7.7	.067 1.7
K4-10R-W*		#10	.209 5.3	.481 12.2	.594 15.1	.1.307 33.2				
K4-14R-W*		1/4	.252 6.4	.481 12.2	.594 15.1	1.299 33.0				
K4-516R-W*		5/16	.331 8.4	.650 16.5	.531 13.5	1.319 33.5				
K4-38R-W*		3/8	.413 10.5	.650 16.5	.531 13.5	1.319 33.5				
K4-12R-CC*		1/2	.512 13.0	.866 22.0	.776 19.7	1.661 42.5				
K2-10R-CC*	2 A.W.G. 38 mm²	#10	.209 5.3	.602 15.3	.685 17.4	1.535 39.0	.551 14.0	.524 13.3	.370 9.4	.071 1.8
K2-14R-CC*		1/4	.252 6.4	.602 15.3	.685 17.4	1.535 39.0				
K2-516R-CC*		5/16	.331 8.4	.602 15.3	.685 17.4	1.535 39.0				
K2-38R-CC*		3/8	.413 10.5	.602 15.3	.685 17.4	1.535 39.0				
K2-12R-CC*		1/2	.512 13.0	.866 22.0	.697 17.7	1.681 42.7				

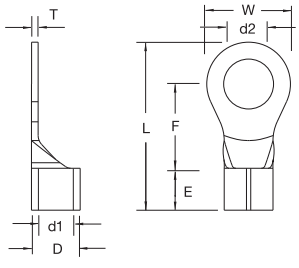

Box Quantity: C=100; CC=200; (W)=250; (D)=500;

For mylar tape, replace box quantity with (T). Example: K6-10R-T.
See pages in back of catalog for complete tool information.
Tool and Die Selection Chart on page M42.

Terminal Material: Copper

UL File #E9809
***Pending UL Listing**

Tools used with Non-Insulated Large Ring Terminals



TBM6S



KT-2500

For tooling information for nylon insulated large ring terminals, see page M37.

Thomas&Betts

© 2002 Thomas & Betts Corporation. Specifications are subject to change without notice.

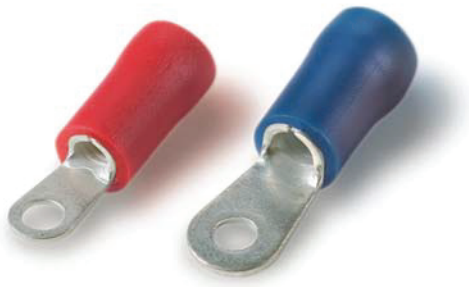

Vinyl Insulated Large Ring Terminals

Catalog Number	Wire Range	Bolt Size (d2)		Dimension inch mm W	F	L	E	D	d1	T
KV8-8R-D	8 A.W.G. 8 mm²	#8	.169 4.3	.315 8.0	.366 9.3	1.16 29.5	.650 16.5	.335 8.5	.177 4.5	.047 1.2
KV8-10R-D		#10	.209 5.3	.346 8.8	.429 10.9	1.25 31.8				
KV8-14R-D		1/4	.252 6.4	.472 12.0	.366 9.3	1.25 31.8				
K8-516R-D		5/16	.331 8.4	.591 15.0	.543 13.8	1.49 37.8				
KV8-38R-D		3/8	.413 10.5	.591 15.0	.543 13.8	1.49 37.8				
KV8-12R-D		1/2	.512 13.0	.787 20.0	.591 15.0	1.63 41.5				
KV6-10R-W	6 A.W.G. 14 mm²	#10	.209 5.3	.472 12.0	.524 13.3	1.62 41.2	.886 22.5	.414 10.5	.222 5.65	.059 1.5
KV6-14R-W		1/4	.252 6.4	.472 12.0	.524 13.3	1.62 41.2				
KV6-516R-W		5/16	.331 8.4	.630 16.0	.571 14.5	1.75 44.5				
KV6-38R-W		3/8	.413 10.5	.630 16.0	.571 14.5	1.75 44.5				
KV6-12R-W		1/2	.512 13.0	.866 22.0	.780 19.8	2.09 53				

- Brazed Seam
- Internal Barrel Serrations

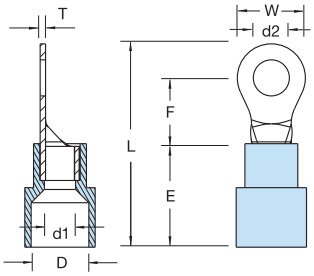

Box Quantity: (W)=250; (D)=500
For mylar tape, replace box quantity with (T). Example: KN8-8R-T.

See pages in back of catalog for complete tool information.
Tool and Die Selection Chart on page M42.

Maximum Electrical Rating: 105°C 600 Volts Max.
Terminal Material: Copper

#8 AWG on mylar tape is UL Listed.
#6 AWG on mylar tape is UL Listed.

UL File #E9809
CSA File #LR4503

M

Spec-Kon®

Tools used with Vinyl Insulated Large Ring Terminals



TBM6S

For tooling information for nylon insulated large ring terminals, see page M37.



KT-2500

© 2002 Thomas & Betts Corporation. Specifications are subject to change without notice.



- Metal Insulation Sleeve
- Molded Insulator
- Internal Barrel Serrations
- Funnel Entry

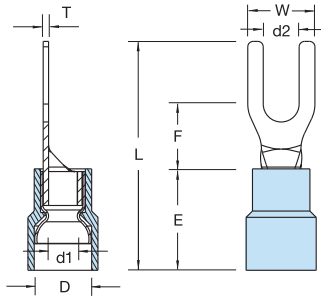

Nylon Insulated Fork Terminals

Catalog Number	Wire Range	Bolt Size (d2)		Dimension inch mm						
				W	F	L	E	D	d1	T
KN18-6F-M	22-16 A.W.G. 0.5-1.5 mm²	#6	.146 3.7	.252 6.4	.256 6.5	.866 22.0	.433 11.0	.177 4.5	.067 1.7	.030 0.75
KN18-8F-M		#8	.169 4.3	.252 6.4	.256 6.5	.866 22.0				
KN18-10F-M		#10	.209 5.3	.319 8.1	.256 6.5	.866 22.0				
KN18-14F-M		1/4	.252 6.4	.374 9.5	.256 6.5	.866 22.0				
KN14-6F-M	16-14 A.W.G. 1.5-2.5 mm²	#6	.146 3.7	.236 6.0	.256 6.5	.866 22.0	.433 11.0	.205 5.2	.091 2.3	.031 0.8
KN14-8F-M		#8	.169 4.3	.252 6.4	.256 6.5	.866 22.0				
KN14-10F-M		#10	.209 5.3	.311 7.9	.256 6.5	.866 22.0				
KN14-14F-M		1/4	.252 6.4	.366 9.3	.256 6.5	.866 22.0				
KN10-6F-D	12-10 A.W.G. 4-6 mm²	#6	.146 3.7	.283 7.2	.295 7.5	.961 24.4	.512 13.0	.276 7.0	.134 3.4	.039 1.0
KN10-8F-D		#8	.169 4.3	.327 8.3	.276 7.0	1.004 25.5				
KN10-10F-D		#10	.209 5.3	.354 9.0	.276 7.0	1.004 25.5				
KN10-14F-D		1/4	.252 6.4	.354 9.0	.276 7.0	1.004 25.5				
KN10-516F-D		5/16	.315 8.4	.551 14.0	.413 10.5	1.201 30.5				

Box Quantity: (D)=500; (M)=1000
For Mylar Tape replace box quantity with (T). Example: KN18-6F-T
UL File #E9809
CSA File #LR4503

See pages in back of catalog for complete tool information.
Tool and Die Selection Chart on page M42.

Maximum Electrical Rating: 105˚C 600 Volts Max.
Terminal Material: Copper

Tools used with Nylon Insulated Ring Terminals



ERG2500



KT-2500

© 2002 Thomas & Betts Corporation. Specifications are subject to change without notice.



Vinyl Insulated Fork Terminals

- Molded Funnel Entry Insulator
- Brazed Seam
- Internal Barrel Serrations

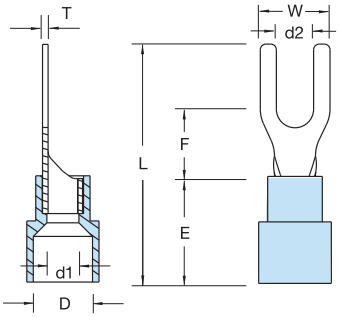

Catalog Number	Wire Range	Bolt Size (d2)		Dimension inch mm						
				W	F	L	E	D	d1	T
KV18-6F-M	22-16 A.W.G. 0.5-1.5 mm²	#6	.146 3.7	.252 6.4	.256 6.5	.866 22.0	.433 11.0	.157 4.0	.067 1.7	.030 0.75
KV18-8F-M		#8	.169 4.3	.252 6.4	.256 6.5	.866 22.0				
KV18-10F-M		#10	.209 5.3	.319 8.1	.256 6.5	.866 22.0				
KV18-14F-M		1/4	.252 6.4	.374 9.5	.256 6.5	.866 22.0				
KV14-6F-M	16-14 A.W.G. 1.5-2.5 mm²	#6	.146 3.7	.236 6.0	.256 6.5	.866 22.0	.433 11.0	.177 4.5	.091 2.3	.031 0.8
KV14-8F-M		#8	.169 4.3	.252 6.4	.256 6.5	.866 22.0				
KV14-10F-M		#10	.209 5.3	.311 7.9	.256 6.5	.866 22.0				
KV14-14F-M		1/4	.252 6.4	.366 9.3	.256 6.5	.866 22.0				
KV10-6F-D	12-10 A.W.G. 4-6 mm²	#6	.146 3.7	.283 7.2	.295 7.5	.961 24.4	.512 13.0	.252 6.4	.134 3.4	.039 1.0
KV10-8F-D		#8	.169 4.3	.327 8.3	.276 7.0	1.004 25.5				
KV10-10F-D		#10	.209 5.3	.354 9.0	.276 7.0	1.004 25.5				
KV10-14F-D		1/4	.252 6.4	.354 9.0	.276 7.0	1.004 25.5				
KV10-516F-D		5/16	.315 8.4	.551 14.0	.413 10.5	1.201 30.5				

Box Quantity: (D)=500; (M)=1000
For Mylar Tape replace box quantity with (T). Example: KV18-6F-T
UL File #E9809
CSA File #LR4503

See pages in back of catalog for complete tool information.
Tool and Die Selection Chart on page M42.

Maximum Electrical Rating: 105°C 600 Volts Max.
Terminal Material: Copper

Tools used with Vinyl Insulated Fork Terminals



ERG2500



KT-2500

© 2002 Thomas & Betts Corporation. Specifications are subject to change without notice. **www.tnb.com**



- Chamfered Barrel
- Brazed Seam
- Internal Barrel Serrations

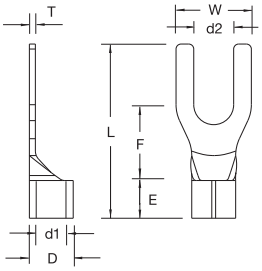

Non-Insulated Fork Terminals

Catalog Number	Wire Range	Bolt Size (d2)		Dimension inch mm						
				W	F	L	E	D	d1	T
K18-6F-M	22-16 A.W.G. 0.5-1.5 mm²	#6	.146 3.7	.252 6.4	.256 6.5	.630 16.0	.189 4.8	.134 3.4	.067 1.7	.030 0.75
K18-8F-M		#8	.169 4.3	.252 6.4						
K18-10F-M		#10	.209 5.3	.319 8.1						
K14-6F-M	16-14 A.W.G. 1.5-2.5 mm²	#6	.146 3.7	.236 6.0	.256 6.5	.630 16.0	.189 4.8	.161 4.1	.091 2.3	.031 0.8
K14-8F-M		#8	.169 4.3	.252 6.4						
K14-10F-M		#10	.209 5.3	.319 8.1						
K10-6F-M	12-10 A.W.G. 4-6 mm²	#6	.146 3.7	.283 7.2	.295 7.5	.685 17.4	.236 6.0	.220 5.6	.134 3.4	.039 1.0
K10-8F-M		#8	.169 4.3	.327 8.3	.276 7.0	.728 18.5				
K10-10F-M		#10	.209 5.3	.354 9.0						
K10-14F-M		1/4	.252 6.4	.354 9.0						

Box Quantity: (M)=1000
For Mylar Tape replace box quantity with (T). Example: K18-6F-T
UL File #E9809
CSA File #LR4503

See pages in back of catalog for complete tool information.
Tool and Die Selection Chart on page M42.

Terminal Material: Copper

Tools used with Non-Insulated Fork Terminals



ERG2002



KT-2500

Thomas&Betts

© 2002 Thomas & Betts Corporation. Specifications are subject to change without notice.

Nylon Insulated Locking Fork Terminals



- Metal Insulation Sleeve
- Molded Insulator
- Internal Barrel Serrations
- Funnel Entry

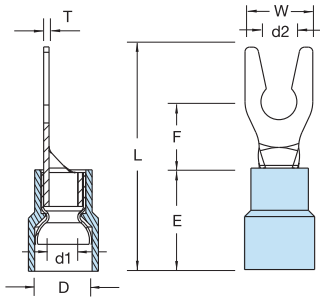

Catalog Number	Wire Range	Bolt Size (d2)		Dimension inch mm						
				W	F	L	E	D	d1	T
KN18-6LF-M	22-16 A.W.G. 0.5-1.5 mm²	#6	.146 3.7	.252 6.4	.256 6.5	.866 22.0	.433 11.0	.177 4.5	.067 1.7	.030 0.75
KN18-8LF-M		#8	.169 4.3	.283 7.2						
KN18-10LF-M		#10	.209 5.3	.319 8.1						
KN14-6LF-M	16-14 A.W.G. 1.5-2.5 mm²	#6	.146 3.7	.236 6.0	.256 6.5	.866 22.0	.433 11.0	.205 5.2	.091 2.3	.031 0.8
KN14-8LF-M		#8	.169 4.3	.283 7.2						
KN14-10LF-M		#10	.209 5.3	.319 8.1						
KN10-6LF-D	12-10 A.W.G. 4-6 mm²	#6	.146 3.7	.327 8.3	.276 7.0	.992 25.2	.512 13.0	.276 7.0	.134 3.4	.039 1.0
KN10-8LF-D		#8	.169 4.3	.327 8.3						
KN10-10LF-D		#10	.209 5.3	.354 9.0						

Box Quantity: (D)=500; (M)=1000
For Mylar Tape replace box quantity with (T). Example: KN18-6LF-T
UL File #E9809, CSA File #LR4503

See pages in back of catalog for complete tool information.
Tool and Die Selection Chart on page M42.

Maximum Electrical Rating: 105°C 600 Volts Max.
Terminal Material: Copper

Vinyl Insulated Locking Fork Terminals



- Molded Funnel Entry Insulator
- Internal Barrel Serrations

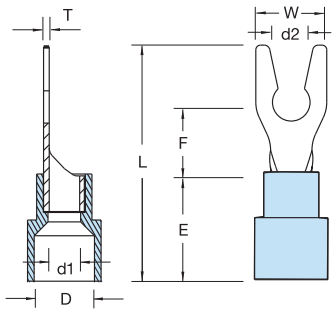

Catalog Number	Wire Range	Bolt Size (d2)		Dimension inch mm						
				W	F	L	E	D	d1	T
KV18-6LF-M	22-16 A.W.G. 0.5-1.5 mm²	#6	.146 3.7	.252 6.4	.256 6.5	.866 22.0	.433 11.0	.157 4.0	.067 1.7	.030 0.75
KV18-8LF-M		#8	.169 4.3	.283 7.2						
KV18-10LF-M		#10	.209 5.3	.319 8.1						
KV14-6LF-M	16-14 A.W.G. 1.5-2.5 mm²	#6	.146 3.7	.236 6.0	.256 6.5	.866 22.0	.433 11.0	.177 4.5	.091 2.3	.031 0.8
KV14-8LF-M		#8	.169 4.3	.283 7.2						
KV14-10LF-M		#10	.209 5.3	.319 8.1						
KV10-6LF-D	12-10 A.W.G. 4-6 mm²	#6	.146 3.7	.327 8.3	.276 7.0	.992 25.2	.512 13.0	.252 6.4	.134 3.4	.039 1.0
KV10-8LF-D		#8	.169 4.3	.327 8.3						
KV10-10LF-D		#10	.209 5.3	.354 9.0						

Box Quantity: (D)=500; (M)=1000
For Mylar Tape replace box quantity with (T).
Example: KV18-6LF-T
UL File #E9809, CSA File #LR4503

See pages in back of catalog for complete tool information.
Tool and Die Selection Chart on page M42.

Maximum Electrical Rating: 105°C 600 Volts Max.
Terminal Material: Copper

Tools used with Nylon and Vinyl Insulated Locking Fork Terminals



ERG2500



KT-2500

Thomas&Betts

© 2002 Thomas & Betts Corporation. Specifications are subject to change without notice. www.tnb.com

Non-Insulated Locking Fork Terminals



- Chamfered Barrel
- Brazed Seam
- Internal Barrel Serrations

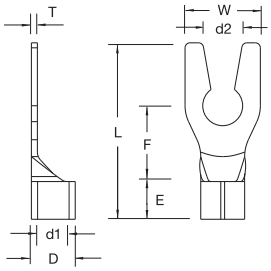

Catalog Number	Wire Range	Bolt Size (d2)		Dimension inch mm						
				W	F	L	E	D	d1	T
K18-6LF-M	22-16 A.W.G. 0.5-1.5 mm²	#6	.146 3.7	.252 6.4	.256 6.5	.630 16.0	.189 4.8	.134 3.4	.067 1.7	.030 0.75
K18-8LF-M		#8	.169 4.3	.283 7.2						
K18-10LF-M		#10	.209 5.3	.319 8.1						
K14-6LF-M	16-14 A.W.G. 1.5-2.5 mm²	#6	.146 3.7	.236 6.0	.256 6.5	.630 16.0	.189 4.8	.161 4.1	.091 2.3	.031 0.8
K14-8LF-M		#8	.169 4.3	.283 7.2						
K14-10LF-M		#10	.209 5.3	.319 8.1						
K10-6LF-M	12-10 A.W.G. 4-6 mm²	#6	.146 3.7	.327 8.3	.276 7.0	.717 18.2	.236 6.0	.220 5.6	.134 3.4	.039 1.0
K10-8LF-M		#8	.169 4.3	.327 8.3						
K10-10LF-M		#10	.209 5.3	.354 9.0						

Box Quantity: (M)=1000
For Mylar Tape replace box quantity with (T). Example: K18-6LF-T
UL File #E9809
CSA File #LR4503

See pages in back of catalog for complete tool information.
Tool and Die Selection Chart on page M42.

Terminal Material: Copper

Tools used with Non-Insulated Locking Fork Terminals



ERG2002



KT-2500

© 2002 Thomas & Betts Corporation. Specifications are subject to change without notice.

Nylon Insulated Flanged Fork Terminals



- Reduces Slippage in High Vibration Applications
- Metal Insulation Sleeve
- Molded Insulator
- Internal Barrel Serrations
- Funnel Entry

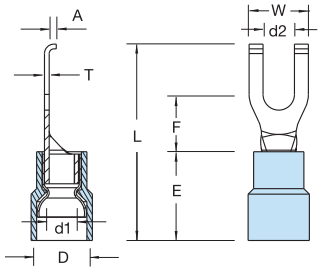

Catalog Number	Wire Range	Bolt Size (d2)		Dimension inch mm							
				W	F	L	E	D	d1	A	T
KN18-6FF-M	22-16 A.W.G. 0.5-1.5 mm²	#6	.146 3.7	.335 8.5	.283 7.2	1.004 25.5	.433 11.0	.177 4.5	.067 1.7	.059 1.5	.030 0.75
KN18-8FF-M		#8	.169 4.3	.335 8.5	.283 7.2	1.004 25.5					
KN18-10FF-M		#10	.209 5.3	.335 8.5	.283 7.2	1.004 25.5					
KN14-6FF-M	16-14 A.W.G. 1.5-2.5 mm²	#6	.146 3.7	.335 8.5	.283 7.2	.945 24.0	.433 11.0	.205 5.2	.091 2.3	.059 1.5	.031 0.8
KN14-8FF-M		#8	.169 4.3	.335 8.5	.283 7.2	.945 24.0					
KN14-10FF-M		#10	.209 5.3	.335 8.5	.283 7.2	.945 24.0					
KN10-6FF-D	12-10 A.W.G. 4-6 mm²	#6	.146 3.7	.335 8.5	.295 7.5	1.063 27.0	.512 13.0	.276 7.0	.134 3.4	.059 1.5	.039 1.0
KN10-8FF-D		#8	.169 4.3	.335 8.5	.295 7.5	1.063 27.0					
KN10-10FF-D		#10	.209 5.3	.335 8.5	.295 7.5	1.063 27.0					

Box Quantity: (D)=500; (M)=1000
For Mylar Tape replace box quantity with (T). Example: KN18-6FF-T
UL File #E9809, CSA File #LR4503

See pages in back of catalog for complete tool information.
Tool and Die Selection Chart on page M42.

Maximum Electrical Rating: 105°C 600 Volts Max.
Terminal Material: Copper

Vinyl Insulated Flanged Fork Terminals



- Reduces Slippage in High Vibration Applications
- Molded Funnel Entry Insulator
- Brazed Seam
- Internal Barrel Serrations

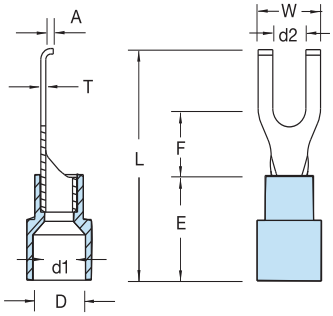

Catalog Number	Wire Range	Bolt Size (d2)		Dimension inch mm							
				W	F	L	E	D	d1	A	T
KV18-6FF-M	22-16 A.W.G. 0.5-1.5 mm²	#6	.146 3.7	.252 6.4	.201 5.1	.787 20.0	.433 11.0	.157 4.0	.067 1.7	.059 1.5	.030 0.75
KV18-8FF-M		#8	.169 4.3	.335 8.5	.283 7.2	1.004 25.5					
KV18-10FF-M		#10	.209 5.3	.335 8.5	.283 7.2	1.004 25.5					
KV14-6FF-M	16-14 A.W.G. 1.5-2.5 mm²	#6	.146 3.7	.335 8.5	.283 7.2	.945 24.0	.433 11.0	.177 4.5	.091 2.3	.059 1.5	.031 0.8
KV14-8FF-M		#8	.169 4.3	.335 8.5	.283 7.2	.945 24.0					
KV14-10FF-M		#10	.209 5.3	.335 8.5	.283 7.2	.945 24.0					
KV10-6FF-D	12-10 A.W.G. 4-6 mm²	#6	.146 3.7	.299 7.6	.244 6.2	1.004 25.5	.512 13.0	.252 6.4	.134 3.4	.059 1.5	.039 1.0
KV10-8FF-D		#8	.169 4.3	.299 7.6	.244 6.2	1.004 25.5					
KV10-10FF-D		#10	.209 5.3	.299 7.6	.244 6.2	1.004 25.5					

Box Quantity: (D)=500; (M)=1000
For Mylar Tape replace box quantity with (T).
Example: KV18-6FF-T
UL File #E9809, CSA File #LR4503

See pages in back of catalog for complete tool information.
Tool and Die Selection Chart on page M42.

Maximum Electrical Rating: 105°C 600 Volts Max.
Terminal Material: Copper

Tools used with Nylon and Vinyl Insulated Flanged Fork Terminals



ERG2500



KT-2500

© 2002 Thomas & Betts Corporation. Specifications are subject to change without notice. **www.tnb.com**

Non-Insulated Flanged Fork Terminals



- Reduces Slippage in High Vibration Applications
- Chamfered Barrel
- Brazed Seam
- Internal Barrel Serrations

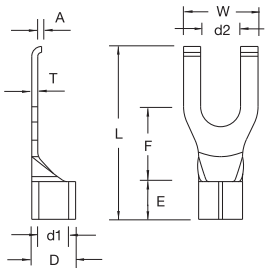

Catalog Number	Wire Range	Bolt Size (d2)		Dimension inch mm							
				W	F	L	E	D	d1	A	T
K18-6FF-M	22-16 A.W.G. 0.5-1.5 mm²	#6	.146 3.7	.335 8.5	.283 7.2	.768 19.5	.189 4.8	.134 3.4	.067 1.7	.059 1.5	.030 0.75
K18-8FF-M		#8	.169 4.3	.335 8.5	.283 7.2	.768 19.5					
K18-10FF-M		#10	.209 5.3	.335 8.5	.283 7.2	.768 19.5					
K14-6FF-M	16-14 A.W.G. 1.5-2.5 mm²	#6	.146 3.7	.335 8.5	.283 7.2	.709 18.0	.189 4.8	.161 4.1	.091 2.3	.059 1.5	.031 0.8
K14-8FF-M		#8	.169 4.3	.335 8.5	.283 7.2	.709 18.0					
K14-10FF-M		#10	.209 5.3	.335 8.5	.283 7.2	.709 18.0					
K10-6FF-M	12-10 A.W.G. 4-6 mm²	#6	.146 3.7	.335 8.5	.295 7.5	.787 20.0	.236 6.0	.220 5.6	.134 3.4	.059 1.5	.039 1.0
K10-8FF-M		#8	.169 4.3	.335 8.5	.295 7.5	.787 20.0					
K10-10FF-M		#10	.209 5.3	.335 8.5	.295 7.5	.787 20.0					

Box Quantity: (M)=1000
For Mylar Tape replace box quantity with (T). Example: K18-6FF-T
UL FIle #E9809
CSA File #LR4503

See pages in back of catalog for complete tool information.
Tool and Die Selection Chart on page M42.

Terminal Material: Copper

Tools used with Non-Insulated Flanged Fork Terminals



ERG2002



KT-2500

© 2002 Thomas & Betts Corporation. Specifications are subject to change without notice.



- For Use in DIN-Style Blade Terminal Blocks
- Metal Insulation Sleeve
- Molded Insulator
- Internal Barrel Serrations
- Funnel Entry

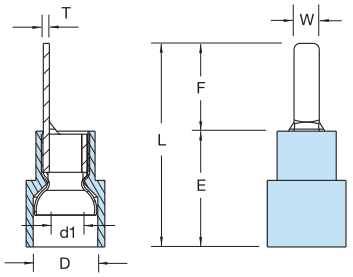

Nylon Insulated Blade Terminals

Catalog Number	Wire Range	Dimension inch mm						
		W	F	L	E	D	d1	T
KN18-10BL-M	22-16 A.W.G. 0.5-1.5 mm²	.091 2.3	.394 10.0	.819 20.8	.433 11.0	.177 4.5	.067 1.7	.030 0.75
KN18-18BL-M		.087 2.2	.709 18.0	1.134 28.8				
KN14-10BL-M	16-14 A.W.G. 1.5-2.5 mm²	.094 2.4	.394 10.0	.819 20.8	.433 11.0	.205 5.2	.091 2.3	.031 0.8
KN14-18BL-M		.087 2.2	.709 18.0	1.134 28.8				
KN10-10BL-D	12-10 A.W.G. 4-6 mm²	.110 2.8	.394 10.0	.906 23.0	.512	.276	.134	.039

Box Quantity: (D)=500; (M)=1000
For Mylar Tape replace box quantity with (T). Example: KN18-10BL-T
UL File #E9809
CSA File #LR4503

See pages in back of catalog for complete tool information.
Tool and Die Selection Chart on page M42.

Maximum Electrical Rating: 105°C 600 Volts Max.
Terminal Material: Copper



- For Use in DIN-Style Blade Terminal Blocks
- Molded Funnel Entry Insulator
- Brazed Seam
- Internal Barrel Serrations

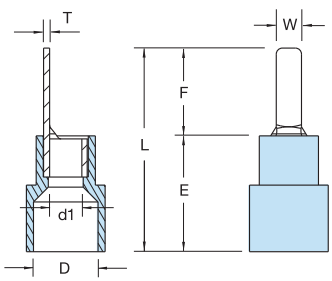

Vinyl Insulated Blade Terminals

Catalog Number	Wire Range	Dimension inch mm						
		W	F	L	E	D	d1	T
KV18-10BL-M	22-16 A.W.G. 0.5-1.5 mm²	.091 2.3	.394 10.0	.819 20.8	.433 11.0	.157 4.0	.067 1.7	.030 0.75
KV18-18BL-M		.087 2.2	.709 18.0	1.134 28.8				
KV14-10BL-M	16-14 A.W.G. 1.5-2.5 mm²	.094 2.4	.394 10.0	.819 20.8	.433 11.0	.177 4.5	.091 2.3	.031 0.8
KV14-18BL-M		.087 2.2	.709 18.0	1.134 28.8				
KV10-10BL-D	12-10 A.W.G. 4-6 mm²	.110 2.8	.394 10.0	.906 23.0	.512 13.0	.252 6.4	.134 3.4	.039 1.0

Box Quantity: (D)=500; (M)=1000
For Mylar Tape replace box quantity with (T). Example: KV18-10BL-T
UL File #E9809
CSA File #LR4503

See pages in back of catalog for complete tool information.
Tool and Die Selection Chart on page M42.

Maximum Electrical Rating: 105°C 600 Volts Max.
Terminal Material: Copper

Tools used with Nylon and Vinyl Insulated Blade Terminals



ERG2500



KT-2500

Thomas&Betts

© 2002 Thomas & Betts Corporation. Specifications are subject to change without notice. **www.tnb.com**

Nylon Insulated Pin Terminals



- For Use in Pin-Style Terminal Blocks
- Metal Insulation Sleeve
- Molded Insulator
- Internal Barrel Serrations
- Funnel Entry

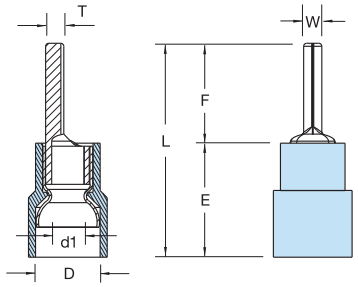

Catalog Number	Wire Range	Dimension inch mm						
		W	F	L	E	D	d1	T
KN18-12PT-M	22-16 A.W.G. 0.5-1.5 mm²	.075 1.9	.472 12.0	.898 22.8	.433 11.0	.177 4.5	.067 1.7	.030 0.75
KN14-12PT-M	16-14 A.W.G. 1.5-2.5 mm²	.075 1.9	.472 12.0	.898 22.8	.433 11.0	.205 5.2	.091 2.3	.031 0.8
KN10-14PT-D	12-10 A.W.G. 4-6 mm²	.110 2.8	.551 14.0	1.063 27.0	.512 13.0	.276 7.0	.134 3.4	.039 1.0

Box Quantity: (D)=500; (M)=1000
For Mylar Tape replace box quantity with (T). Example: KN18-12PT-T
UL File #E9809
CSA File #LR4503

See pages in back of catalog for complete tool information.
Tool and Die Selection Chart on page M42.

Maximum Electrical Rating: 105°C 600 Volts Max.
Terminal Material: Copper

Vinyl Insulated Pin Terminals



- For Use in Pin-Style Terminal Blocks
- Molded Funnel Entry Insulator
- Brazed Seams
- Internal Barrel Serrations

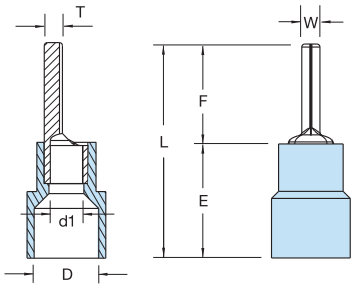

Catalog Number	Wire Range	Dimension inch mm						
		W	F	L	E	D	d1	T
KV18-12PT-M	22-16 A.W.G. 0.5-2.5 mm²	.075 1.9	.472 12.0	.898 22.8	.433 11.0	.157 4.0	.067 1.7	.030 0.75
KV14-12PT-M	16-14 A.W.G. 1.5-2.5 mm²	.075 1.9	.472 12.0	.898 22.8	.433 11.0	.177 4.5	.091 2.3	.031 0.8
KV10-14PT-D	12-10 A.W.G. 4-6 mm²	.110 2.8	.551 14.0	1.063 27.0	.512 13.0	.252 6.4	.134 3.4	.039 1.0

Box Quantity: (D)=500; (M)=1000
For Mylar Tape replace box quantity with (T). Example: KV18-12PT-T
UL File #E9809
CSA File #LR4503

See pages in back of catalog for complete tool information.
Tool and Die Selection Chart on page M42.

Maximum Electrical Rating: 105°C 600 Volts Max.
Terminal Material: Copper

Tools used with Nylon and Vinyl Insulated Pin Terminals



ERG2500



KT-2500

Thomas&Betts

© 2002 Thomas & Betts Corporation. Specifications are subject to change without notice. **www.tnb.com**

Spec-Kon®
Disconnects

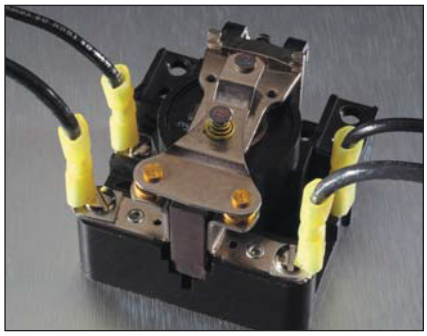

Features and Benefits

Nylon and Vinyl Disconnects

- *Sleeved barrel*—Ensures barrel does not separate during crimping.
- *Funnel entry insulators*—Funnel entry speeds installation and reduces wire hang up.
- *Partial and fully insulated*—Offers a wide range of products to meet virtually any application

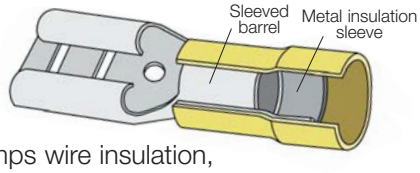

- *Metal insulation sleeve*—Sleeve crimps wire insulation, providing high-vibration resistance and conductor strain relief.
- *Ratings*—UL Listed, cULus Listed, CSA, 600 V at 105ºC for nylon and vinyl.

Design Features of Spec-Kon® Disconnects

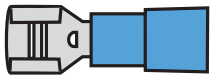

Female Disconnect
Provides easy installation and removal from male tabs and auxiliary equipment

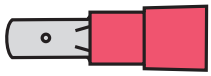

Male Disconnect
Tab-style male disconnects are fast and reliable

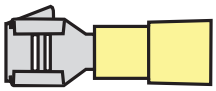

Female Piggy Back
Provides the option for multiple circuits using one termination point

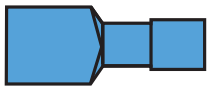

Fully Insulated Female
Standard female tab with the safety and reliability of complete insulation

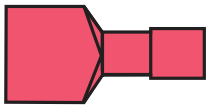

Fully Insulated Male
Standard male tab with the safety and reliability of complete insulation

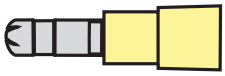

Bullet Disconnect and Receptacle
Fast and reliable alternative to the tab style featuring a lower profile to reduce space requirements

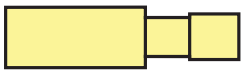

M

Spec-Kon®

Performance Requirements

Description	Wire Size (AWG)						
	#22	#20	#18	#16	#14	#12	#10
U.L. 310 (Disconnects)							
Test Current for Max. 30˚C Rise (Amps)	3	4	7	10	15	20	24
Min. Tensile Strength* (Lbs.)	8	13	20	30	50	70	80

*** Pull-out force of the crimped terminal.**

Applicable Spec-Kon® products meet or exceed the following test specifications:

- UL310 (Disconnects)
- CSA

UL listed products are shown with the applicable logos in the product section.
UL file #E66716 (Disconnects).
CSA file #LR4503

Thomas&Betts

© 2002 Thomas & Betts Corporation. Specifications are subject to change without notice.

Nylon Insulated Female Disconnects



110 Tab Size



187 Tab Size



250 Tab Size

Catalog Number	Wire Range	Tab Size inch	Dimension inch mm					
			W	F	L	B	D	T
KN18-110-20FD-M	22-16 A.W.G. 0.5-1.5 mm²	.110 x .020	.126 3.2	.256 6.5	.772 19.6	.433 11.0	.157 4.0	.012 0.3
KN18-110-32FD-M		.110 x .032	.126 3.2	.256 6.5	.772 19.6			
KN18-187-20FD-M		.187 x .020	.197 5.0	.252 6.4	.787 20.0			.016 0.4
KN18-187-32FD-M		.187 x .032	.197 5.0	.252 6.4	.787 20.0			
KN18-250FD-M		.250 x .032	.260 6.6	.287 7.3	.846 21.5			
KN14-110-20FD-M	16-14 A.W.G. 1.5-2.5 mm²	.110 x .020	.126 3.2	.252 6.4	.772 19.6	.433 11.0	.197 5.0	.012 0.3
KN14-110-32FD-M		.110 x .032	.126 3.2	.252 6.4	.772 19.6			
KN14-187-20FD-M		.187 x .020	.197 5.0	.256 6.5	.787 20.0			.016 0.4
KN14-187-32FD-M		.187 x .032	.197 5.0	.256 6.5	.787 20.0			
KN14-250FD-M		.250 x .032	.260 6.6	.287 7.3	.846 21.5			
KN10-110-20FD-D	12-10 A.W.G. 4-6 mm²	.110 x .020	.126 3.2	.343 8.7	.866 22.0	.512 13.0	.256 6.5	.016 0.4
KN10-110-32-FD-D		.110 x .032	.126 3.2	.343 8.7	.866 22.0			
KN10-187-20FD-D		.187 x .020	.197 5.0	.256 6.5	.866 22.0			
KN10-187-32FD-D		.187 x .032	.197 5.0	.256 6.5	.866 22.0			
KN10-250FD-D		.250 x .032	.260 6.6	.287 7.3	.925 23.5			

Box Quantity: (D)=500; (M)=1000
For Mylar Tape replace box quantity with (T). Example: KN18-110FD-T
UL File #E66716
CSA File #LR4503

See pages in back of catalog for complete tool information.
Tool and Die Selection Chart on page M42.

Maximum Electrical Rating: 105°C 600 Volts Max.
Terminal Material: Brass with Copper Sleeve

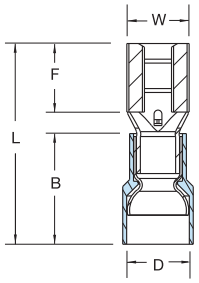

- For Use in Temporary Connections to Male Disconnects & Terminal Blocks
- Multiple Sizes for Range of Applications
- Metal Insulation Sleeve
- Molded Insulator
- Internal Barrel Serrations
- Funnel Entry

Tools used with Nylon Insulated Female Disconnects



ERG2500



KT-2500

Thomas&Betts

© 2002 Thomas & Betts Corporation. Specifications are subject to change without notice.

Vinyl Insulated Female Disconnects



110 Tab Size



187 Tab Size



250 Tab Size

Catalog Number	Wire Range	Tab Size inch	Dimension inch mm					
			W	F	L	B	D	T
KV18-110-20FD-M	22-16 A.W.G. 0.5-1.5 mm²	.110 x .020	.126 3.2	.256 6.5	.728 19.0	.413 10.5	.150 3.8	.012 0.3
KV18-110-32-FD-M		.110 x .032	.126 3.2	.256 6.5	.728 19.0			
KV18-187-20FD-M		.187 x .020	.197 5.0	.252 6.4	.764 19.4			.016 0.4
KV18-187-32FD-M		.187 x .032	.197 5.0	.252 6.4	.764 19.4			
KV18-250FD-M		.250 x .032	.260 6.6	.287 7.3	.819 20.8			
KV14-110-20FD-M	16-14 A.W.G. 1.5-2.5 mm²	.110 x .020	.126 3.2	.256 6.5	.748 19.0	.413 10.5	.185 4.7	.012 0.3
KV14-110-32FD-M		.110 x .032	.126 3.2	.256 6.5	.748 19.0			
KV14-187-20-FD-M		.187 x .020	.197 5.0	.252 6.4	.764 19.4			.016 0.4
KV14-187-32-FD-M		.187 x .032	.197 5.0	.252 6.4	.764 19.4			
KV14-250FD-M		.250 x .032	.260 6.6	.287 7.3	.819 20.8			
KV10-110-20FD-D	12-10 A.W.G. 4-6 mm²	.110 x .020	.126 3.2	.343 8.7	.866 22.0	.512 13.0	.244 6.2	.016 0.4
KV10-110-32FD-D		.110 x .032	.126 3.2	.343 8.7	.866 22.0			
KV10-187-20FD-D		.187 x .020	.197 5.0	.256 6.5	.866 22.0			
KV10-187-32FD-D		.187 x .032	.197 5.0	.256 6.5	.866 22.0			
KV10-250FD-D		.250 x .032	.260 6.6	.287 7.3	.917 23.3			

Box Quantity: (D)=500; (M)=1000
For Mylar Tape replace box quantity with (T). Example: KV18-110FD-T
UL File #E66716
CSA File #LR4503

See pages in back of catalog for complete tool information.
Tool and Die Selection Chart on page M42.

Maximum Electrical Rating: 105°C 300 Volts Max.
Terminal Material: Brass with Copper Sleeve

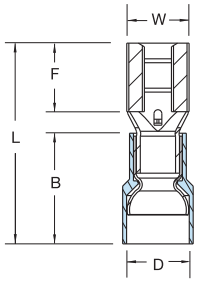

M

Spec-Kon®

- For Use in Temporary Connections to Male Disconnects & Terminal Blocks
- Metal Insulation Sleeve
- Easy Entry Copper Sleeve

Tools used with Vinyl Insulated Female Disconnects



ERG2500



KT-2500

© 2002 Thomas & Betts Corporation. Specifications are subject to change without notice. www.tnb.com

Nylon Insulated Male Disconnects



- For Use with Female Disconnects
- Metal Insulation Sleeve
- Molded Insulator
- Internal Barrel Serrations
- Funnel Entry

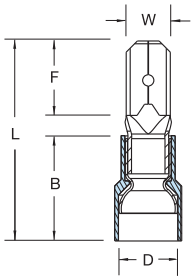

Catalog Number	Wire Range	Tab Size inch	Dimension inch mm					
			W	F	L	B	D	T
KN18-250MD-M	22-16 A.W.G. 0.5-1.5 mm²	.250 x .032	.250 6.35	.303 7.7	.866 22.0	.413 11.0	.150 4.0	.016 0.4
KN14-250MD-M	16-14 A.W.G. 1.5-2.5 mm²	.250 x .032	.250 6.35	.303 7.7	.866 22.0	.433 11.0	.197 5.0	.016 0.4
KN10-250MD-D	12-10 A.W.G. 4-6 mm²	.250 x .032	.250 6.35	.303 7.7	.945 24.0	.512 13.0	.256 6.5	.016 0.4

Box Quantity: (D)=500; (M)=1000
For Mylar Tape replace box quantity with (T). Example: KN18-250MD-T
UL File #E66716
CSA File #LR4503

See pages in back of catalog for complete tool information.
Tool and Die Selection Chart on page M42.

Maximum Electrical Rating: 105°C 600 Volts Max.
Terminal Material: Brass with Copper Sleeve

Vinyl Insulated Male Disconnects



- For Use with Female Disconnects
- Metal Insulation Sleeve
- Easy Entry Copper Sleeve

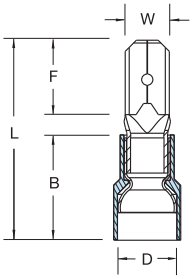

Catalog Number	Wire Range	Tab Size inch	Dimension inch mm					
			W	F	L	B	D	T
KV18-250MD-M	22-16 A.W.G. 0.5-1.5 mm²	.250 x .032	.250 6.35	.303 7.7	.858 21.8	.413 10.5	.150 3.8	.016 0.4
KV14-250MD-M	16-14 A.W.G. 1.5-2.5 mm²	.250 x .032	.250 6.35	.303 7.7	.858 21.8	.413 10.5	.185 4.7	.016 0.4
KV10-250MD-D	12-10 A.W.G. 4-6 mm²	.250 x .032	.250 6.35	.303 7.7	.945 24.0	.512 13.0	.244 6.2	.016 0.4

Box Quantity: (D)=500; (M)=1000
For Mylar Tape replace box quantity with (T). Example: KV18-250MD-T
UL File #E66716
CSA File #LR4503

See pages in back of catalog for complete tool information.
Tool and Die Selection Chart on page M42.

Maximum Electrical Rating: 105°C 300 Volts Max.
Terminal Material: Brass with Copper Sleeve

Tools used with Nylon and Vinyl Insulated Male Disconnects



ERG2500



KT-2500

Thomas&Betts

© 2002 Thomas & Betts Corporation. Specifications are subject to change without notice. **www.tnb.com**

Nylon Insulated Piggy Back Disconnects



- Male and Female Tabs Combined
- Additional conductors may be added to existing installations without changing blocks
- Metal Insulation Sleeve
- Molded Insulator
- Internal Barrel Serrations
- Funnel Entry

Catalog Number	Wire Range	Tab Size inch	Dimension inch mm							
			W	W1	F	F1	L	B	D	T
KN18-250PD-M	22-16 A.W.G. 0.5-1.5 mm²	.250 x .032	.260 6.6	.250 6.35	.315 8.0	.323 8.2	.906 23.0	.433 11.0	.157 4.0	.016 0.4
KN14-250PD-M	16-14A.W.G. 1.5-2.5 mm²	.250 x .032	.260 6.6	.250 6.35	.315 8.0	.323 8.2	.906 23.0	.433 11.0	.197 5.0	.016 0.4
KN10-250PD-D	12-10A.W.G. 4-6 mm²	.250 x .032	.260 6.6	.250 6.35	.315 8.0	.323 8.2	.945 24.0	.512 13.0	.256 6.5	.016 0.4

Box Quantity: (D)=500; (M)=1000
UL File #E66716
CSA File #LR4503

See pages in back of catalog for complete tool information.
Tool and Die Selection Chart on page M42.

Maximum Electrical Rating: 105°C 600 Volts Max.
Terminal Material: Brass with Copper Sleeve

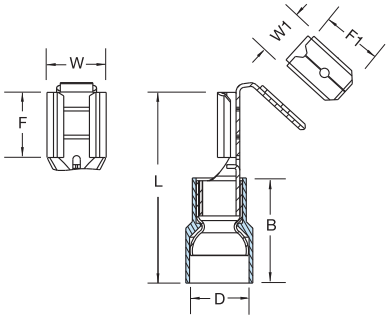

Vinyl Insulated Piggy Back Disconnects



- Male and Female Tabs Combined
- Additional conductors may be added to existing installations without changing blocks
- Brazed Seam
- Internal Barrel Serrations
- Funnel Entry

Catalog Number	Wire Range	Tab Size inch	Dimension inch mm							
			W	W1	F	F1	L	B	D	T
KV18-250PD-M	22-16 A.W.G. 0.5-1.5 mm²	.250 x .032	.260 6.6	.250 6.35	.315 8.0	.323 8.2	.886 22.5	.413 10.5	.150 3.8	.016 0.4
KV14-250PD-M	16-14 A.W.G. 1.5-2.5 mm²	.250 x .032	.260 6.6	.250 6.35	.315 8.0	.323 8.2	.886 22.5	.413 10.5	.185 4.7	.016 0.4
KV10-250PD-D	12-10 A.W.G. 4-6 mm²	.250 x .032	.260 6.6	.250 6.35	.315 8.0	.323 8.2	.945 24.0	.512 13.0	.244 6.2	.016 0.4

Box Quantity: (D)=500; (M)=1000
UL File #E66716
CSA File #LR4503

See pages in back of catalog for complete tool information.
Tool and Die Selection Chart on page M42.

Maximum Electrical Rating: 105°C 300 Volts Max.
Terminal Material: Brass with Copper Sleeve

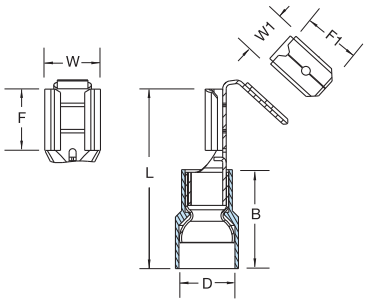

Tools used with Nylon and Vinyl Insulated Piggy Back Disconnects



ERG2500



KT-2500

© 2002 Thomas & Betts Corporation. Specifications are subject to change without notice. **www.tnb.com**



110 Tab Size



187 Tab Size



250 Tab Size

Nylon Fully Insulated Female Disconnects

Catalog Number	Wire Range	Tab Size inch	Dimension inch / mm					
			W	F	L	B	D	T
KNF18-110-20FDM	22-16 A.W.G. 0.5-1.5 mm²	.110 x .020	.126 3.2	.252 6.4	.756 19.2	.433 11.0	.157 4.0	.012 0.3
KNF18-110-32FDM		.110 x .032	.126 3.2	.252 6.4	.756 19.2			
KNF18-187-20FDM		.187 x .020	.197 5.0	.256 6.5	.795 20.2			.016 0.4
KNF18-187-32FDM		.187 x .032	.197 5.0	.256 6.5	.795 20.2			
KNF18-250FD-D		.250 x .032	.260 6.6	.303 7.7	.846 21.5			
KNF14-187-20FDM	16-14 A.W.G. 1.5-2.5 mm²	.187 x .020	.197 5.0	.256 6.5	.795 20.2	.433 11.0	.256 6.0	.016 0.4
KNF14-187-32FDM		.187 x .032	.197 5.0	.256 6.5	.795 20.2			
KNF14-250FD-M		.250 x .032	.260 6.6	.287 7.3	.846 21.5			
KNF10-250FD-D	12-10 A.W.G. 4-6 mm²	.250 x .032	.260 6.6	.287 7.3	.953 24.2	.512 13.0	.256 6.5	.016 0.4

Box Quantity: (D)=500; (M)=1000
For Mylar Tape replace box quantity with (T). Example: KNF18-110-20FD-T
UL File #E66716
CSA File #LR4503

See pages in back of catalog for complete tool information.
Tool and Die Selection Chart on page M42.

Maximum Electrical Rating: 105°C 600 Volts Max.
Terminal Material: Brass with Copper Sleeve

- Fully Insulated
- Metal Insulation Sleeve
- Molded Insulator
- Internal Barrel Serrations
- Funnel Entry

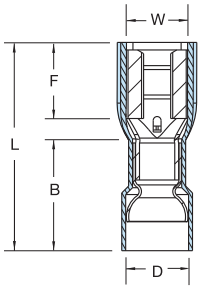

Tools used with Nylon Fully Insulated Female Disconnects



ERG2500



KT-2500

Thomas&Betts

© 2002 Thomas & Betts Corporation. Specifications are subject to change without notice.



110 Tab Size



187 Tab Size



250 Tab Size

- Fully Insulated
- Brazed Seam
- Internal Barrel Serrations
- Funnel Entry

Vinyl Fully Insulated Female Disconnects

Catalog Number	Wire Range	Tab Size inch	Dimension inch mm					
			W	F	L	B	D	T
KVF18-110-20FDM	22-16 A.W.G. 0.5-1.5 mm²	.110 x .020	.126 3.2	.256 6.5	.748 19.0	.413 10.5	.150 3.8	.012 0.3
KVF18-110-32FDM		.110 x .032	.126 3.2	.256 6.5	.748 19.0			
KVF18-187-20FDM		.187 x .020	.197 5.0	.252 6.4	.807 20.5			.016 0.4
KVF18-187-32FDM		.187 x .032	.197 5.0	.252 6.4	.807 20.5			
KVF18-250FD-M		.250 x .032	.260 6.6	.287 7.3	.858 21.8			
KVF14-110-20FDM	16-14 A.W.G. 1.5-2.5 mm²	.110 x .020	.126 3.2	.256 6.5	.748 19.0	.413 10.5	.185 4.7	.012 0.3
KVF14-110-32FDM		.110 x .032	.126 3.2	.256 6.5	.748 19.0			
KVF14-187-20FDM		.187 x .020	.197 5.0	.252 6.4	.796 20.2			.016 0.4
KVF14-187-32FDM		.187 x .032	.197 5.0	.252 6.4	.796 20.2			
KVF14-250FD-M		.250 x .032	.260 6.6	.287 7.3	.874 22.2			
KVF10-250FD-D	12-10 A.W.G. 4-6 mm²	.250 x .032	.260 6.6	.287 7.3	.953 24.2	.492 12.5	.244 6.2	.016 0.4

Box Quantity: (D)=500; (M)=1000
For Mylar Tape replace box quantity with (T). Example: KVF18-110-20FD-T
UL File #E66716
CSA File #LR4503

See pages in back of catalog for complete tool information.
Tool and Die Selection Chart on page M42.

Maximum Electrical Rating: 105°C 300 Volts Max.
Terminal Material: Brass with Copper Sleeve
Tools used with Vinyl Fully Insulated Female Disconnects: ERG2500 and KT2500.

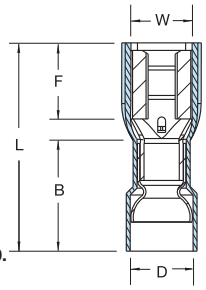



- Fully Insulated
- Metal Insulation Sleeve
- Molded Insulator
- Internal Barrel Serrations
- Funnel Entry

Nylon Fully Insulated Male Disconnects

Catalog Number	Wire Range	Tab Size inch	Dimension inch mm					
			W	F	L	B	D	T
KNF18-250MD-D	22-16 A.W.G. 0.5-1.5 mm²	.250 x .032	.250 6.35	.303 7.7	.976 24.0	.433 11.0	.157 4.0	.016 0.4
KNF14-250MD-D	16-14 A.W.G. 1.5-2.5 mm²	.250 x .032	.250 7.7	.303 24.0	.976	.433 11.0	.197 5.0	.016 0.4
KNF10-250MD-D	12-10 A.W.G. 4-6 mm²	.250 x .032	.250 6.35	.303 7.7	1.016 25.8	.512 13.0	.256 6.5	.016 0.4

Box Quantity: (D)=500
UL File #E66716
CSA File #LR4503

See pages in back of catalog for complete tool information.
Tool and Die Selection Chart on page M42.

Maximum Electrical Rating: 105°C 600 Volts Max.
Terminal Material: Brass with Copper Sleeve

Yellow Male Disconnect Not Shown.
Tools used with Nylon Fully Insulated Male Disconnects: ERG2500 and KT2500.

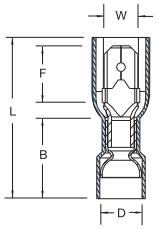

Thomas&Betts

© 2002 Thomas & Betts Corporation. Specifications are subject to change without notice. www.tnb.com



- Fully Insulated
- Molded Funnel Entry Insulator
- Internal Barrel Serrations

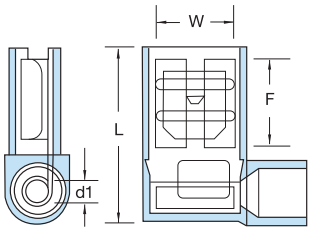

Nylon Fully Insulated Female Flag Disconnects

Catalog Number	Wire Range	Tab Size inch	Dimension inch / mm				
			W	F	L	d1	T
KNF18-187-20FFD-M	22-18 A.W.G. 0.5-1.5 mm²	.187 x .020	.197 5.0	.276 7.0	.591 15.0	.063 1.6	.016 0.4
KNF18-187-32FFD-M		.187 x .032	.197 5.0	.276 7.0	.591 15.0		
KNF18-250FFD-M		.250 x .032	.260 6.6	.299 7.6	.598 15.2		
KNF14-187-20FFD-M	16-14 A.W.G. 1.5-2.5 mm²	.187 x .020	.197 5.0	.276 7.0	.598 15.2	.083 2.1	.016 0.4
KNF14-187-32FFD-M		.187 x .032	.197 5.0	.276 7.0	.598 15.2		
KNF14-250FFD-M		.250 x .032	.260 6.6	.299 7.6	.598 15.2		

Box Quantity: (W)=250; (D)=500; (M)=1000

See pages in back of catalog for complete tool information.
Tool and Die Selection Chart on page M42.

Maximum Electrical Rating: 105˚C 300 Volts Max.
Terminal Material: Brass



- Fully Insulated
- Molded Funnel Entry Insulator
- Internal Barrel Serrations

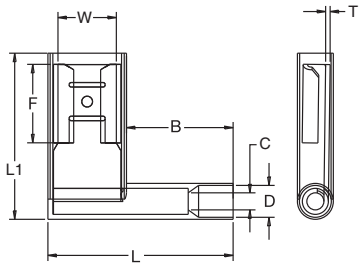

Nylon Fully Insulated Barrel Flag Female Disconnects

Catalog Number	Wire Range	Tab Size inch	Dimension inch / mm						
			W	F	L	L 1	B	D	T
KNF18-187-20BFD-D	22-18 A.W.G. 0.5-1.5 mm²	.187 x .020	.197 5.0	.244 6.2	.748 19.0	.555 14.1	.433 11.0	.137 3.5	.015 0.4
KNF18-187-32BFD-D		.187 x .032	.197 5.0	.244 6.2	.748 19.0	.555 14.1	.433 11.0	.137 3.5	.015 0.4
KNF18-250BFD-D		.250 x .032	.260 6.6	.307 7.8	.818 20.8	.653 16.6	.433 11.0	.157 4.0	.015 0.4
KNF14-250BFD-D	16-14 A.W.G.	.250 x .032	.260 6.6	.307 7.8	.818 20.8	.653 16.6	.433 11.0	.177 4.5	.015 0.4
KNF10-250BFD-D	12-10 A.W.G.	.250 x .032	.260 6.6	.307 7.8	.905 23.0	.697 17.7	.511 13.0	.248 6.3	.015 0.4

Box Quantity: (W)=250; (D)=500; (M)=1000
For Mylar Tape replace box quantity with (T).
Example: KVF18-110-20FD-T

See pages in back of catalog for complete tool information.

Tool and Die Selection Chart on page M42.
Maximum Electrical Rating: 105˚C 600 Volts Max.
Terminal Material: Brass

Tools used with Nylon Fully Insulated Female Flag Disconnects and Nylon Fully Insulated Barrell Flag Female Disconnects: ERG2500F

© 2002 Thomas & Betts Corporation. Specifications are subject to change without notice.

Nylon Fully Insulated Bullet Receptacles



- Fully Insulated
- Metal Insulation Sleeve
- Molded Insulator
- Internal Barrel Serrations
- Funnel Entry

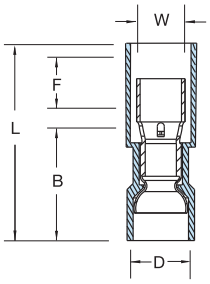

Catalog Number	Wire Range	Dimension inch mm					
		W	F	L	B	D	T
KNF18-4FB-M	22-16 A.W.G. 0.5-1.5 mm²	.153 3.9	.287 7.3	.992 25.2	.433 11.0	.157 4.0	.016 0.4
KNF14-4FB-M	16-14 A.W.G. 1.5-2.5 mm²	.153 3.9	.287 7.3	.992 25.2	.433 11.0	.197 5.0	.016 0.4

Box Quantity: (M)=1000
For Mylar Tape replace box quantity with (T). Example: KNF18-4FB-T
UL File #E66716
CSA File #LR4503

See pages in back of catalog for complete tool information.
Tool and Die Selection Chart on page M42.

Maximum Electrical Rating: 105°C 600 Volts Max.
Terminal Material: Brass with Copper Sleeve

Vinyl Fully Insulated Bullet Receptacles



- Brazed Seam
- Internal Barrel Serrations
- Funnel Entry

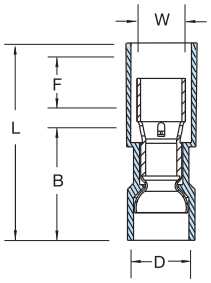

Catalog Number	Wire Range	Dimension inch mm					
		W	F	L	B	D	T
KVF18-4FB-M	22-16 A.W.G. 0.5-1.5 mm²	.153 3.9	.287 7.3	.917 23.3	.413 10.5	.150 3.8	.016 0.4
KVF14-4FB-M	16-14 A.W.G. 1.5-2.5 mm²	.153 3.9	.287 7.3	.917 23.3	.413 10.5	.185 4.7	.016 0.4
KVF10-5FB-D*	12-10 A.W.G. 4-6 mm²	.193 4.9	.276 7.0	.988 25.1	.492 12.5	.244 6.2	.018 0.45

***Not UL listed**
Box Quantity: (D)=500; (M)=1000
For Mylar Tape replace box quantity with (T). Example: KVF18-4FB-T
UL File #E66716
CSA File #LR4503

See pages in back of catalog for complete tool information.
Tool and Die Selection Chart on page M42.

Maximum Electrical Rating: 75°C 300 Volts Max.
Terminal Material: Brass with Copper Sleeve

Tools used with Nylon and Vinyl Insulated Bullet Receptacles



ERG2500



KT-2500

© 2002 Thomas & Betts Corporation. Specifications are subject to change without notice. **www.tnb.com**

Nylon Fully Insulated Bullet Disconnects



Catalog Number	Wire Range	Dimension inch / mm					
		W	F	L	B	D	T
KNF18-4MB-D	22-16 A.W.G. 0.5-1.5 mm²	.157 4.0	.413 10.5	1.063 27.0	.394 10.0	.157 4.0	.016 0.4
KNF14-4MB-D	16-14 A.W.G. 1.5-2.5 mm²	.157 4.0	.413 10.5	1.063 27.0	.394 10.0	.177 4.5	.016 0.4

- Fully Insulated
- Metal Insulation Sleeve
- Molded Insulator
- Internal Barrel Serrations
- Funnel Entry

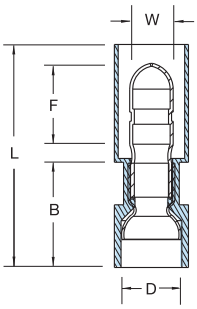

Box Quantity: (D)=500
For Mylar Tape replace box quantity with (T). Example: KNF18-4MB-T

See pages in back of catalog for complete tool information.
Tool and Die Selection Chart on page M42.

Maximum Electrical Rating: 105°C 600 Volts Max.
Terminal Material: Brass with Copper Sleeve

Vinyl Insulated Bullet Disconnects



Catalog Number	Wire Range	Dimension inch / mm					
		W	F	L	B	D	T
KV18-4MB-M	22-16 A.W.G. 0.5-1.5 mm²	.157 4.0	.413 10.5	9.25 23.5	.413 10.5	.150 3.8	.016 0.4
KV14-4MB-M	16-14 A.W.G. 1.5-2.5 mm²	.157 4.0	.413 10.5	9.25 23.5	.413 10.5	.185 4.7	.016 0.4
KV10-5MB-D	12-10 A.W.G. 4-6 mm²	.197 5.0	.335 8.5	.945 24.0	.512 13.0	.244 6.2	.016 0.4

- Brazed Seam
- Internal Barrel Serrations
- Funnel Entry

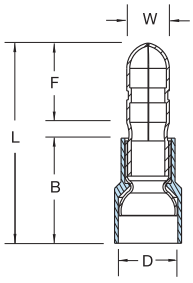

Box Quantity: (D)=500
For Mylar Tape replace box quantity with (T). Example: KV18-4MB-T
UL File #E66716
CSA File #LR4503

See pages in back of catalog for complete tool information.
Tool and Die Selection Chart on page M42.

Maximum Electrical Rating: 75°C 300 Volts Max.
Terminal Material: Brass with Copper Sleeve

Tools used with Nylon and Vinyl Insulated Bullet Disconnects



ERG2500



KT-2500

Thomas&Betts

© 2002 Thomas & Betts Corporation. Specifications are subject to change without notice.

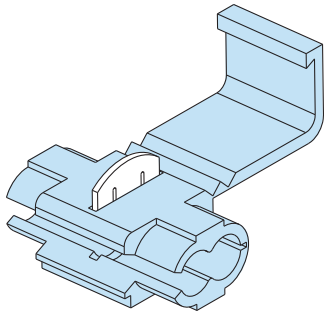

Features and Benefits

Splices / Wire Joints / Quick Splices

- Ideal for in-line splicing.
- Butt Splices available in Nylon, Vinyl, and non-insulated types.
- Vinyl Quick Splices are color-coded for wire ranges, and provide quick, easy in-line splicing and tapping.
- Nylon wire joint provides long-lasting, durable connection and can accommodate multiple leads. Rated 300 V at 105ºC.
- Available in 22-10 AWG.

Design Features of Splices, Wire Joints and Quick Splices



Butt Splice
Ideal for in-line splicing applications

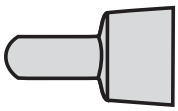

Wire Joints
Provides terminating point for a group of wires running in one direction



Quick Splices
Great for quick in-line splicing and tapping without stripping the wire insulation

Performance Requirements

Description	Wire Size (AWG)										
	#22	#20	#18	#16	#14	#12	#10	#8	#6	#4	#2
U.L. 486A (Terminals)											
Test Current for Max. 50˚C Rise (Amps)	9	12	17	18	30	35	50	70	95	125	145
Min. Tensile Strength* (Lbs.)	8	13	20	30	50	70	80	90	100	140	160

*** Pull-out force of the crimped terminal.**

Applicable Spec-Kon® products meet or exceed the following test specifications:

- UL486A (Terminals)
- CSA
- UL486C (Splices)

UL listed products are shown with the applicable logos in the product section.
UL file #E9809 (Terminals).
CSA file #LR4503

© 2002 Thomas & Betts Corporation. Specifications are subject to change without notice.



Nylon Insulated Butt Splice

Catalog Number	Wire Range	Dimension inch mm		
		L	D	d1
KN18-BS-M	22-16 A.W.G. 0.5-1.5 mm²	1.075 27.3	.126 3.2	.067 1.7
KN14-BS-M	16-14 A.W.G. 1.5-2.5 mm²	1.075 27.3	.150 3.8	.091 2.3
KN10-BS-D	12-10 A.W.G 4-6 mm²	1.110 28.2	.248 6.3	.134 3.4

- Internal Wire Stop
- Brazed Seams (Yellow -Tubular)
- Chamfered Funnel Entry

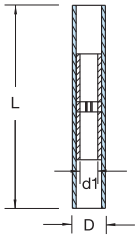

Box Quantity: (W)=250; (D)=500; (M)=1000

See pages in back of catalog for complete tool information.
Tool and Die Selection Chart on page M42.
UL File #9809
CSA File #LR4503

Maximum Electrical Rating: 105˚C 600 Volts Max.
Connector Material: Copper



Vinyl Insulated Butt Splice

Catalog Number	Wire Range	Dimension inch mm		
		L	D	d1
KV18-BS-M	22-16 A.W.G. 0.5-1.5 mm²	.986 24.6	.157 4.0	.067 1.7
KV14-BS-M	16-14 A.W.G. 1.5-2.5 mm²	.986 24.6	.177 4.5	.091 2.3
KV10-BS-D	12-10 A.W.G. 4-6 mm²	1.024 26.0	2.48 6.3	1.34 3.4

3.2

- Expanded Entry
- Brazed Seams (Yellow -Tubular)
- Internal Barrel Serrations

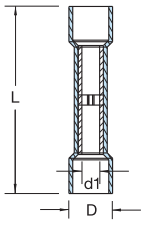

Box Quantity: (W)=250; (D)=500; (M)=1000
UL File #E9809
CSA File #LR4503

See pages in back of catalog for complete tool information.
Tool and Die Selection Chart on page M42.

Maximum Electrical Rating: 75˚C 600 Volts Max.
Terminal Material: Copper

Tool used with Nylon and Vinyl Insulated Butt Splice



ERG2500

© 2002 Thomas & Betts Corporation. Specifications are subject to change without notice.

Non-Insulated Butt Splice



- Chamfered Barrel Entry
- Seamless Barrel Construction
- Wire Stop

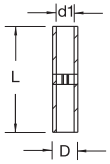

Catalog Number	Wire Range	Dimension inch mm			
		L	D	d1	T
K18-BS-M	22-16 A.W.G. 0.5-1.5 mm²	.591 15.0	.130 3.3	.067 1.7	.031 0.8
K14-BS-M	16-14 A.W.G. 1.5-2.5 mm²	.591 15.0	.154 3.9	.091 2.3	.031 0.8
K10-BS-M	12-10 A.W.G. 4-6 mm²	.591 15.0	.213 5.4	.134 3.4	.039 1.0

Box Quantity: (M)=1000
UL File #E9809
CSA File #LR4503

See pages in back of catalog for complete tool information.
Tool and Die Selection Chart on page M42.

Terminal Material: Copper Tubular

Tool used with Non-Insulated Butt Splice



ERG2002

Nylon Insulated Wire Joint



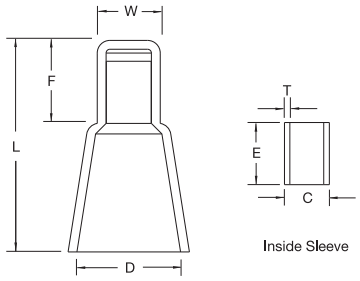

Catalog Number	Wire Range	Dimension inch mm						
		W	F	L	D	E	T	C
KN18-WJ-M	22-16 A.W.G. 1.25 mm²	.209 5.3	.315 8.0	.827 21.0	.386 9.8	.276 7.0	.020 0.5	.091 2.3
KN14-WJ-M	16-14 A.W.G. 2 mm²	.236 6.0	.354 9.0	.827 21.0	.394 10.0	.276 7.0	.020 0.5	.122 3.1
KN10-WJ-D	12-10 A.W.G. 5.5 mm²	.299 7.6	.394 10.0	1.004 25.5	.492 12.5	.295 7.5	.028 0.7	.157 4.0

Box Quantity: (W)=250; (D)=500; (M)=1000
UL File #E66716
CSA File #LR4503

See pages in back of catalog for complete tool information.
Tool and Die Selection Chart on page M42.

Maximum Electrical Rating: 105°C 300 Volts Max.
Terminal Material: Copper Tube

Tool used with Nylon Insulated Wire Joint



ERG2500WJ

Vinyl Insulated Quick Splice

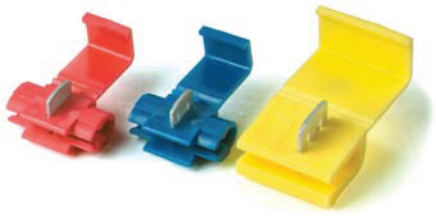

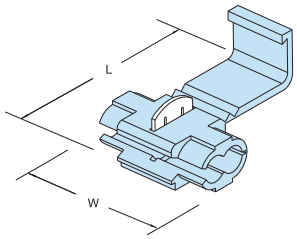

Catalog Number	Wire Range	Dimension inch mm		
		W	L	Color
KV14-OOQS-D	22-18 A.W.G. 0.5-1.0 mm²	.787 20.0	1.063 27.0	red
KV18-OOQS-D	18-14 A.W.G. .75-2.5 mm²	.787 20.0	1.063 27.0	blue
KV10-OOQS*	12-10 A.W.G. 4-6 mm²	.807 20.5	1.358 34.5	yellow

Box Quantity: (W)=250; (D)=500; (M)=1000
*** 200 piece quantity only.**
See pages in back of catalog for complete tool information.
Tool and Die Selection Chart on page M42.

Maximum Electrical Rating: 105°C 600 Volts Max.
Terminal Material: Brass

© 2002 Thomas & Betts Corporation. Specifications are subject to change without notice. www.tnb.com



ERG2500

Comfort Crimp® Terminal Tools
ERG-2500, ERG-2500F, ERG-2002, ERG-2500WJ

Ergonomic ratchet style hand tool used for installing insulated Spec-Kon® terminals. Specially designed ergonomic handles distributes the crimping force evenly across the user's hands. Helps reduce the risk of Carpal Tunnel Syndrome, the cause of almost one of every two industrial injuries. Ratchet design greatly reduces handle forces over conventional hand tools and incorporates the Shure-Stake® mechanism which ensures full compression every time. Color coded die nests (insulated only) facilitates getting the right terminal in the right nest.



ERG2002



ERG2500WJ

Catalog Number	Terminal Style	Wire Range
ERG-2500	All Insulated Terminals, Splices, & Disconnects (except Flags)	22 - 10 AWG
ERG-2002	All Non-Insulated Terminals, Splices, & Disconnects	22 - 10 AWG
ERG-2500F	Nylon Fully Insulated Female Flag Disconnects	22 - 14 AWG
ERG-2500WJ	Nylon Insulated Wire Joint	22 - 10 AWG

*** Contact Customer Service for availability of this product. Longer lead times may be required.**

Tool Gauging Requirements

Catalog Number	Wire Range	Gauging (inches)
ERG-2500	22 - 16 AWG 16 - 14 AWG 12 - 10 AWG	.080 - .088 .091 - .099 .119 - .127
ERG-2002	22 - 16 AWG 16 - 14 AWG 12 - 10 AWG	.067 - .062 .089 - .084 .115 - .110
ERG-2500F	22 - 14 AWG	–
ERG-2500WJ	22 - 10 AWG	–

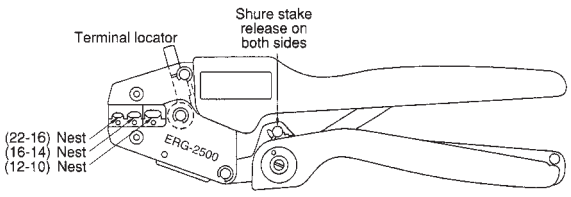

- Installs Nylon and Vinyl Insulated Terminals, Disconnects, and Splices 22-10 AWG
- The force required to release the Shure-Stake® mechanism should be no less than 20 lbs.

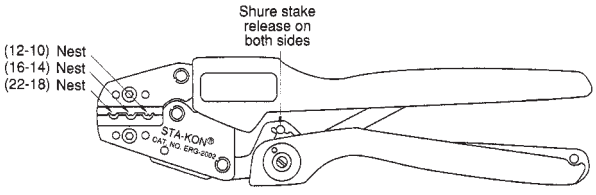

- Installs Non-Insulated Terminals, Disconnects, and Splices 22-10 AWG
- The force required to release the Shure-Stake® mechanism should be no less than 15 lbs.

© 2002 Thomas & Betts Corporation. Specifications are subject to change without notice.

Plier Type Tools
WT111M and WT112M



WT111M



WT112M

Economical plier type hand tool used for installing non-insulated and insulated Spec-Kon® terminals. Range of sizes include 22 AWG through 10 AWG. Nose of the tool is equipped with wire cutters for convenience.

Catalog Number	Description	Std. Pkg	Wt. each
WT111M	Non-Insulated Plier Tool with Cutter for 22-10 AWG	1	1
WT112M	Insulated and Non-Insulated Plier Tool with Cutter for 22-10 AWG	1	1

- These tools are designed with wire cutters for customer convenience.

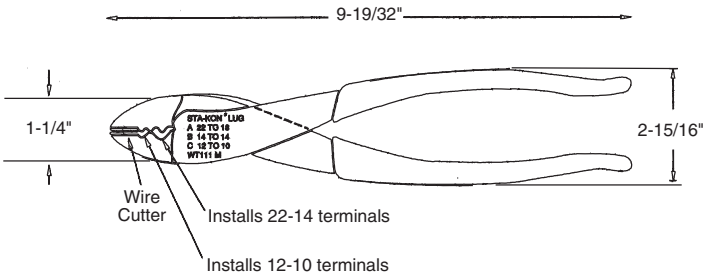

- WT111M - Installs 22-10 AWG non-insulated Spec-Kon® Terminals
- Gauging for 22-14 AWG 0.027 - 0.053 in.
- Gauging for 12-10 AWG 0.072 - 0.098 in.

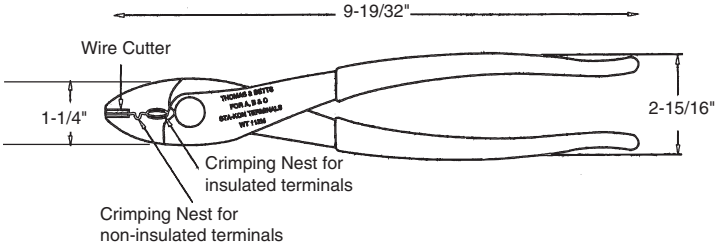

- WT112 M - Installs insulated and non-insulated Spec-Kon® terminals, splices, disconnects, and wire joints 22-10 AWG
- Gauging for insulated terminals .092 - .104
- Gauging for non-insulated terminals .044 - .056

© 2002 Thomas & Betts Corporation. Specifications are subject to change without notice. www.tnb.com



TBM6



TBM6S

Toggle Type Tools TBM6 and TBM6S

Toggle type hand tool for installing large insulated and non-insulated Spec-Kon® terminals. Terminal size ranges from #8 AWG through #2 AWG MCM. Interchangeable dies are ordered separately. The TBM6S features the Shure-Stake® mechanism which ensures full compression every time.

Catalog Number	Terminal Size For use with Spec-Kon®	Std. Pkg	Wt. each
TBM6	8 - 2 AWG	1	9
TBM6S	8 - 2 AWG	1	9

Installing Dies

Nest Stationary Die	Indentor Movable Die	Terminal Size	Gauging (inches)
Installing dies for non-insulated Spec-Kon® terminals			
11805	**11802**	8 - 6 AWG	.157-.177
11806	**11802**	4 AWG	.196-.216
11807	**11802**	2 AWG	.224-.244
Installing dies for insulated Spec-Kon® terminals			
11822	–	8 AWG	.192 - .212
11823	–	6 AWG	.244-.264

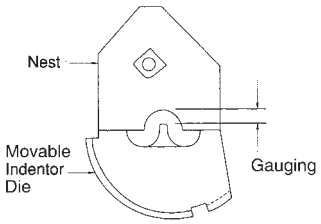

- For use with non-insulated terminals Cat No. TBM6 and TBM6S

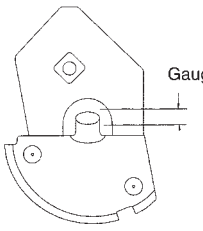

- For use with insulated terminals Cat No. TBM6 and TBM6S

© 2002 Thomas & Betts Corporation. Specifications are subject to change without notice.

Spec-Kon®
Automated Tools

NEW



Universal Applicator

The Universal Applicator from Thomas & Betts offers a unique opportunity to use the range of quality Spec-Kon tape-mounted terminals on your own machine. If you have the press already, there's no need for additional costly investments on your plant floor to convert to another terminal. Our applicator will handle the entire range of Mylar-tape fed terminals offered in the Spec-Kon product line, and allows you more flexibility on your production line. Fast and simple. If you have the press, we've got the applicator.



The new Spec-Kon Universal Applicator is designed for quick terminal conversions in plant equipment such as the Applitek press.

Spec-Kon® Universal Applicator includes these prominent features:

- Allows industry-standard presses to use Spec-Kon® Terminal Products (AMP-compatible).
- Includes stand-alone presses.
- Also compatible with major brands of wire processing equipment.
- One single part – no additional accessories needed (excluding dies).
- Quick-change of tooling / dies in minutes – simply done with an Allen wrench.
- Convenient Crimp Height adjustment for range of crimping force fine-tuning.
- 22-10 AWG Range.
- Crimps Insulated and Uninsulated Spec-Kon® terminals.
- Crimps Nylon and Vinyl insulation terminals.
- All-metallic construction for years of use.
- Creates UL Listed Crimps.
- One year warranty, excluding dies.

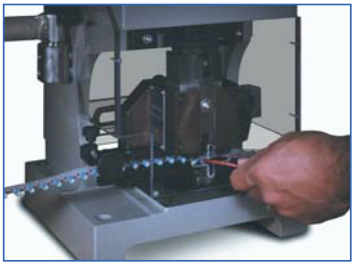

M

Spec-Kon®

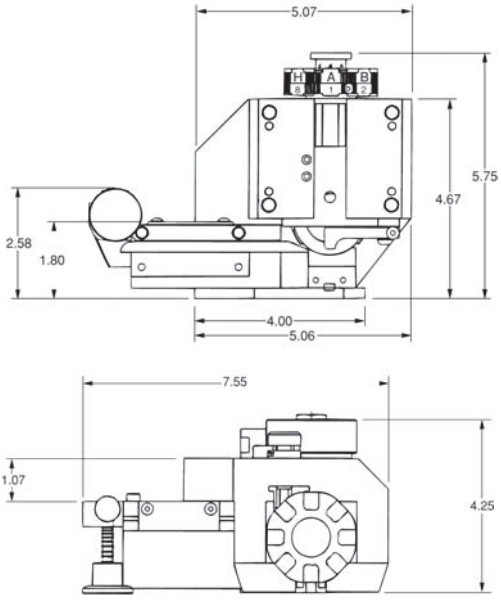

Catalog Number	Description	Std. Pkg	Wt. each
KT2500UA	Spec-Kon® Universal Applicator	1	17 lbs.

AMP is a registered trademark of Tyco Electronics Corporation

Die Chart

Catalog Number	Description	Wire Range
KT-18Z	Insulated Terminals, Disconnects, & Splices	22-16 AWG
KT-14Z	Insulated Terminals, Disconnects, & Splices	16-14 AWG
KT-10Z	Insulated Terminals, Disconnects, & Splices	12-10 AWG
KTU-18Z	Insulated Terminals, Disconnects, & Splices	22-16 AWG
KTU-14Z	Insulated Terminals, Disconnects, & Splices	16-14 AWG
KTU-10Z	Insulated Terminals, Disconnects, & Splices	12-10 AWG

Dimensions: 7.5" x 5.75" x 4.25"
Range: 22 AWG - 10 AWG Insulated and Noninsulated
See instruction manual for complete maintenance, installation and operating characteristics for this tool.

Thomas&Betts

© 2002 Thomas & Betts Corporation. Specifications are subject to change without notice. **www.tnb.com**

Spec-Kon®
Automated Tools

NEW



KT-2500 with reel and foot switch

Bench Mounted Tool for Mylar Tape – KT-2500

Compact, pneumatically operated bench mounted tool for crimping insulated and non-insulated Spec-Kon® terminals on mylar tape. Dies are color coded to match terminal insulation. Unit comes with fully guarded foot pedal and clear plastic safety guard over the die area for added safety. Unit incorporates the Shure-Stake® mechanism which ensures full compression every time.

Catalog Number	Description	Std. Pkg
KT-2500	Bench Mounted Crimping Tool for Mylar Tape	1

Space Requirement: 30"w x 20"h x 20"d
Weight: 55 lbs.
Wire Range: 22-10 AWG
Air Pressure: 90-125 psi input air supply

Installing Dies

Catalog Number	Terminal Style	Wire Range	Gauging (inches)
Installing dies for insulated Spec-Kon® terminals			
KT-18	Insulated Terminals & Disconnects	22-16 AWG	.105 - .109
KT-14	Insulated Terminals & Disconnects	16-14 AWG	.115 - .119
KT-10	Insulated Terminals & Disconnects	12-10 AWG	.134 - .138
Installing dies for non-insulated Spec-Kon® terminals			
KTU-18	Non-Insulated Terminals	22-16 AWG	.072 - .077
KTU-14	Non-Insulated Terminals	16-14 AWG	.096 - .101
KTU-10	Non-Insulated Terminals	12-10 AWG	.126 - .131

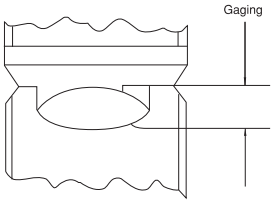

Insulated Terminals

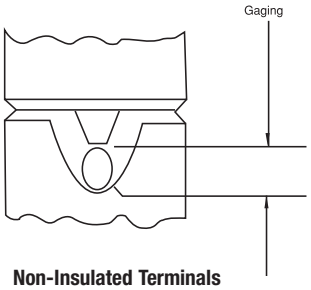

Non-Insulated Terminals

M

Spec-Kon®

Thomas&Betts

© 2002 Thomas & Betts Corporation. Specifications are subject to change without notice. **www.tnb.com**



ERG3000 Battery Powered Tool

Compact, portable, battery operated tool for crimping loose piece insulated and non-insulated Spec-Kon® terminals. Dies are color coded to match terminal insulation. Multi-nested die used for non-insulated which reduces setup time. Unit incorporates the Shure-Stake® mechanism which ensures full compression every time.

Catalog Number	Description	Wt. (lb.)
Standard Components	*Note: The part number ERG-3000 refers to a complete kit consisting of one ERG-3001,one ERG-3002, two ERG-3003, one ERG-3004, and one ERG-3005.*	
ERG-3001	Base Unit	11.0
ERG-3002	Hose & Tool Head Assembly	3.5
ERG-3003	NiCd Battery	1.3
ERG-3004	15 min. Battery Charge	3.0
ERG-3005	Carrying Case	6.3
ERG-3006	AC Adapter	7.0
ERG-3007	Benchmount	1.0
ERG-3008	Switch	2.5
ERG-3000	Complete Kit (see note below)	26.4

- Start button initiates crimping work cycle.
- Safety catch protects fingers when changing die sets.
- Compact tool head operates in tight spaces and weighs just 1.65 pounds to reduce fatigue.
- Swivel head improves access to small spaces.
- Control lever opens jaws for terminal installation and die change.
- Interchangeable dies accommodate Spec-Kon® terminals from 22-10 AWG.
- Easy-to-see indicator lamps show when ERG 3000 is ready to operate or in a work cycle.
- Portable base power unit houses the battery, hydraulic pump, fluid reservoir, and electronic control unit.
- Durable, flexible 8.2 foot hose connects the tool head to the base power unit for extra reach.

Installing Dies

Catalog Number	Terminal Style	Wire Range	Gauging (inches)
Installing dies for insulated Spec-Kon® terminals			
KT-18Y	Insulated Terminals & Disconnects	22-16 AWG	.105 - .109
KT-14Y	Insulated Terminals & Disconnects	16-14 AWG	.115 - .119
KT-10Y	Insulated Terminals & Disconnects	12-10 AWG	.134 - .138
Installing dies for non-insulated Spec-Kon® terminals			
KTU-2214Y	Non-Insulated Terminals (Two Nested Die Set)	22-16 AWG 16-14 AWG	.072 - .077 .096 - .101
KTU-10Y	Non-Insulated Terminals	12-10 AWG	.126 - .131

Technical Data

Base Unit

Working pressure	3625 psi
Power supply	NiCd Battery 12 V DC or AC/DC converter 110 V 60 Hz
Work cycle	1.5-3 seconds
Weight (with battery)	11 lb. (without tool/hose pack)
Dimensions	13.77"L x 7.28" W x 5.12" D
Temperature range	-4° to 122°F

Tool Head Assembly

Press force	3371 lbf
Weight (tool only)	1.65 lb.
Diameter of handle	1.61 in.
Length of handle	8.86 in.
Length of hose	7.22 ft.

Battery

Type	NiCd 12 V, rechargeable
Recharging time	15 min.
Number of recharges	1000

© 2002 Thomas & Betts Corporation. Specifications are subject to change without notice.



13500 with foot switch

Bench Mounted Tool – 13500

Compact, pneumatically operated bench mounted tool for crimping loose piece insulated and non-insulated Spec-Kon® terminals. Dies are color coded to match terminal insulation. Multi-nested die used for non-insulated which reduces setup time. Unit incorporates the Shure-Stake® mechanism which ensures full compression every time.

Catalog Number	Description	Std. Pkg
13500	Bench Mounted Crimping Tool	1

Space Requirement: 8" X 12"
Weight: 10-12 lbs.
Wire Range: 8AWG - 2AWG Insulated & Uninsulated Terminals.
Air Pressure: 85-100 psi

Installing Dies

Catalog Number	Terminal Style	Wire Range	Gauging (inches)
Installing dies for insulated Spec-Kon® terminals			
KT-18X **KT-14X** **KT-10X**	Insulated Terminals & Disconnects	22-16 AWG 16-14 AWG 12-10 AWG	.105 - .109 .115 - .119 .134 - .138
Installing dies for non-insulated Spec-Kon® terminals			
KTU-2210X*	Non-Insulated Terminals (Three Nested Die Set)	22-16 AWG 16-14 AWG 12-10 AWG	.072 - .077 .096 - .101 .126 - .131

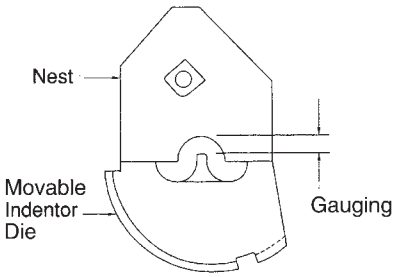

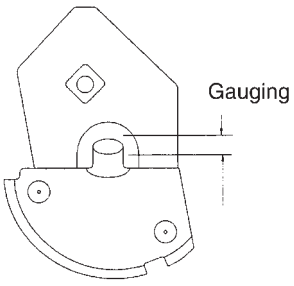

- For use with non-insulated terminals Cat No. TBM6 and TBM6S

- For use with insulated terminals Cat No. TBM6 and TBM6S

M
Spec-Kon®

Thomas&Betts

© 2002 Thomas & Betts Corporation. Specifications are subject to change without notice.

Tool and Die Selection Chart

Spec-Kon® Terminals		Plier Tool	Ergonomic Hand Tool	KT-2500 Pneumatic Tool Die Part Numbers			13500 Pneumatic Tool Die Part Numbers			Erg-3000 Power Hand Tool Die Part Numbers		
Nylon Terminal (22-10 AWG)	KN or KNF	WT112M	ERG-2500	KT-18	KT-14	KT-10	KT-18X	KT-14X	KT-10X	KT-18Y	KT-14Y	KT-10Y
Nylon Butt Splice		WT112M	ERG-2500	N/A	N/A	N/A	KT-18X	KT-14X	KT-10X	KT-18Y	KT-14Y	KT-10Y
Nylon Disconnect		WT112M	ERG-2500	KT-18	KT-14	KT-10	KT-18X	KT-14X	KT-10X	KT-18Y	KT-14Y	KT-10Y
Nylon Terminal (8-6 AWG)		TBM6	N/A	KT-8	KT-6	N/A	N/A	N/A	N/A	N/A	N/A	N/A
Vinyl Terminal (22-10 AWG)	KV or KVF	WT112M	ERG-2500	KT-18	KT-14	KT-10	KT-18X	KT-14X	KT-10X	KT-18Y	KT-14Y	KT-10Y
Vinyl Butt Splice		WT112M	ERG-2500	KT-18	KT-14	KT-10	KT-18X	KT-14X	KT-10X	KT-18Y	KT-14Y	KT-10Y
Vinyl Disconnect		WT112M	ERG-2500	KT-18	KT-14	KT-10	KT-18X	KT-14X	KT-10X	KT-18Y	KT-14Y	KT-10Y
Non Insulated Terminal (22-10 AWG)	K	WT111M	ERG-2002	KTU-18	KTU-14	KTU-10	KTU-2210X	KTU-2210X	KTU-2210X	KTU-2214Y KTU-10Y	KTU-2214Y KTU-10Y	KTU-2214Y KTU-10Y
Non Insulated Butt Splice		WT111M	ERG-2002	N/A	N/A	N/A	KTU-2210X	KTU-2210X	KTU-2210X	KTU-2214Y KTU-10Y	KTU-2214Y KTU-10Y	KTU-2214Y KTU-10Y
Non Insulated Terminal (8-6 AWG)		TBM6	N/A	N/A	N/A	N/A	KTU-8	KTU-6	N/A	N/A	N/A	N/A
Wire Joints	KN or KNF	WT112M	ERG-2500WJ	N/A	N/A	N/A	N/A	N/A	N/A	N/A	N/A	N/A
Flag Terminals		N/A	ERG-2500F	N/A	N/A	N/A	N/A	N/A	N/A	N/A	N/A	N/A

Strip Length Chart

Description	Terminal Series	Wire Strip Length
Non-Insulated Terminals	K18 K14 K10 K8 K6 K4 K2	1/4” 1/4” 5/16” 3/8” 7/16” 1/2" 9/16"
Vinyl Insulated Terminals	KV18 KV14 KV10 KV8 KV6	1/4” 1/4” 5/16” 3/8" 7/16"
Nylon Insulated Terminals	KN18 KN14 KN10 KN8 KN6	1/4” 1/4” 5/16” 3/8” 7/16”
Vinyl Insulated Disconnects	KV18 KV14 KV10	1/4” 1/4” 5/16”
Nylon Insulated Disconnects	KN18 KN14 KN10	1/4” 1/4” 5/16”
Vinyl Insulated Butt Splices	KV18 KV14 KV10	5/16” 5/16” 5/16”
Nylon Insulated Butt Splices	KN18 KN14 KN10	1/4” 1/4” 1/4”
Nylon Wire Joints	K18 K14 K10	9/32” 9/32” 11/32”

© 2002 Thomas & Betts Corporation. Specifications are subject to change without notice. www.tnb.com

Stud Size Chart

Standard Stud Size U.S		Stud Diameter Inches mm	Terminal Hole Dia. Inches mm	Spec-Kon Stud Size Part No. Designation
	#2 M2	.086 2.18	.090 2.29	2
	#4 M2,5	.112 2.84	.118 3.00	4
	#5 M3	.125 3.18	.127 3.23	5
	#6 M3,5	.138 3.51	.146 3.71	6
	#8 M4	.164 4.17	.173 4.39	8
	#10 M5	.190 4.83	.198 5.03	10
	1/4 M6	.250 6.35	.270 6.86	14
	5/16 M8	.312 7.92	.330 8.38	56
	3/8 M10	.375 9.53	.385 9.78	38
	1/2 M12	.500 12.7	.520 13.21	12
	5/8 M16	.625 15.88	.650 16.51	58
	3/4 M18	.750 19.05	.810 20.57	34

Common Conductor Size Chart

Size	No. of Strands	Individual Strand Size	Conductor Size	
		Inches mm	Inches mm	Circl. Mil Area mm
22AWG	7	.0096 0.24	.028 0.74	640 0.74
20AWG	10	.0100 0.25	.038 0.97	1020 0.519
18AWG	16	.0100 0.25	.048 1.22	1620 0.823
16AWG	26	.0100 0.25	.060 1.52	2580 1.310
14AWG	7	.0242 0.61	.073 1.85	4110 2.080
12AWG	7	.0305 0.77	.092 2.34	6530 3.310
10AWG	7	.0385 0.98	.116 2.95	10,380 5.261
8AWG	7	.0486 1.23	.146 3.71	16,510 8.367
6AWG	7	.0612 1.55	.184 4.67	26,240 13.30
4AWG	7	.0772 1.96	.232 5.89	41,740 21.15
2AWG	7	.0974 2.47	.292 7.42	66,360 33.62
1AWG	19	.0664 1.69	.332 8.43	83,690 42.41
1/10AWG	19	.0745 1.89	.373 9.47	105,600 53.49
2/0AWG	19	.0837 2.13	.418 10.62	133,100 67.43
3/0AWG	19	.0940 2.39	.470 11.94	167,800 85.01
4/0AWG	19	.1055 2.68	.528 13.41	211,600 107.2
250MCM	37	.0822 2.09	.575 14.61	250,000 127
300MCM	37	.0900 2.29	.630 16.00	300,000 152
350MCM	37	.0973 2.47	.681 17.29	350,000 177
400MCM	37	.1040 2.64	.728 18.49	400,000 203
500MCM	37	.1162 2.95	.813 20.65	500,000 253
600MCM	61	.0992 2.52	.893 22.68	600,000 304
750MCM	61	.1109 2.82	.998 25.35	750,000 380
800MCM	61	.1145 2.91	1.031 26.19	800,000 405
1000MCM	61	.1280 3.25	1.152 29.26	1,000,000 507

© 2002 Thomas & Betts Corporation. Specifications are subject to change without notice.

FS Boxes and Covers











Applications :

- FS boxes are CSA approved for wet locations
- FS device boxes are installed in applications that require a rugged unit to accept wiring devices, switches, electronic components and terminal blocks
- FS device boxes provide spacious accessible wiring chambers that are a convenient location to maintain or change a system; pull conductors; make splices or branch conduits
- FS device boxes, when used with an appropriate cover, provide a raintight installation
- Both weatherproof and dry location covers are available

Features/Benefits :

- FS device boxes are sand casted or die casted using copper free (less than 0.004 copper content) aluminum alloys.
- FS device boxes incorporate external hub design that provides maximum wiring capacity
- FS device boxes have precision molded NPT threaded hubs allowing trouble-free field installation of rigid conduit
- FS device boxes are available in 1-7/8 in. and 2-5/8 in. depth
- Carlon® nonmetallic weatherproof FS covers are UV resistant, flame retardant and non-corrosive

Standard Materials :

- CIFS and CIFD device boxes: sand cast, copper free aluminum (less than 0.004 copper content)
- CIFSU: die cast, copper free aluminum (less than 0.004 copper content)
- FS covers: die cast aluminum, sand cast aluminum or nonmetallic

Compliances :

Compliances as noted on each page of the catalogue include:

- CSA Certified
- UL Listed

FS Boxes and Covers



CIFDC-1/2

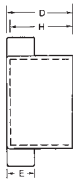

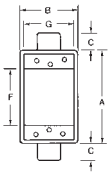

Cat. No.	Hub Size	No. of Gangs	No. of Lugs	A (in.)	B (in.)	C (in.)	D (in.)	E (in.)	F (in.)	G (in.)	H (in.)	Cu (in.)
FDC Boxes - 2-5/8 in. Deep (Cast Aluminum)												
CIFDC-1/2	2 x 1/2	1	2	4-5/16	2-13/16	15/16	2-5/8	1-3/8	2-7/8	2-3/8	2-5/32	22.5
CIFDC-3/4	2 x 3/4	1	2	4-5/16	2-13/16	15/16	2-5/8	1-3/8	2-7/8	2-3/8	2-13/32	22.5
CIFDC-1	2 x 1	1	2	4-5/16	2-13/16	1-3/8	2-5/8	1-5/8	2-7/8	2-3/8	2-13/32	22.5



CIFS-1G



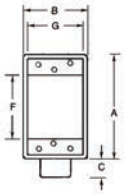



CIFS-2G

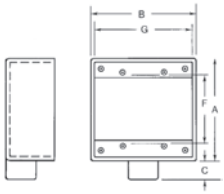



CIFS-3G

Cat. No.	Hub Size	No. of Gangs	No. of Lugs	A (in.)	B (in.)	C (in.)	D (in.)	E (in.)	F (in.)	G (in.)	H (in.)	Cu (in.)
FS Boxes - 1-7/8 in. Deep (Cast Aluminum)												
CIFS-1G-1/2	1 x 1/2	1	3	4-5/16	2-13/16	13/16	1-7/8	1-1/4	2-7/8	2-5/16	1-9/16	14.0
CIFS-1G-3/4	1 x 3/4	1	3	4-5/16	2-13/16	13/16	1-7/8	1-1/2	2-7/8	2-5/16	1-9/16	14.0
CIFS-1G-1	1 x 1	1	3	4-5/16	2-13/16	13/16	1-7/8	1-3/4	2-7/8	2-5/16	1-9/16	14.0
CIFS-2G-1/2	1 x 1/2	2	3	4-3/8	4-11/16	7/8	1-7/8	1-1/4	2-7/8	4-1/4	1-5/8	26.0
CIFS-2G-3/4	1 x 3/4	2	3	4-3/8	4-11/16	7/8	1-7/8	1-9/16	2-7/8	4-1/4	1-5/8	26.0
CIFS-2G-1	1 x 1	2	3	4-3/8	4-11/16	7/8	1-7/8	1-3/4	2-7/8	4-1/4	1-5/8	26.0
CIFS-3G-1/2	1 x 1/2	3	3	4-3/8	6-1/2	7/8	1-7/8	1-1/4	2-7/8	6-1/16	1-5/8	41.0
CIFS-3G-3/4	1 x 3/4	3	3	4-3/8	6-1/2	7/8	1-7/8	1-9/16	2-7/8	6-1/16	1-5/8	41.0

FS Boxes and Covers



CIFSC-1G



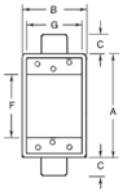



CIFSC-3G-3/4

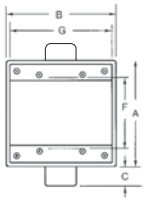

Cat. No.	Hub Size (in.)	No. of Gangs	No. of Lugs	A (in.)	B (in.)	C (in.)	D (in.)	E (in.)	F (in.)	G (in.)	H (in.)	Cu (in.)
FSC Boxes - 1-7/8 in. Deep (Cast Aluminum)												
CIFSC-1G-1/2	2 x 1/2	1	4	4-5/16	2-13/16	27/32	1-7/8	1-1/4	2-7/8	2-5/16	1-9/16	14.0
CIFSC-1G-3/4	2 x 3/4	1	4	4-5/16	2-13/16	27/32	1-7/8	1-1/2	2-7/8	2-5/16	1-9/16	14.0
CIFSC-1G-1	2 x 1	1	4	4-5/16	2-13/16	27/32	1-7/8	1-3/4	2-7/8	2-5/16	1-9/16	14.0
CIFSC-2G-1/2	2 x 1/2	2	4	4-3/8	4-11/16	31/32	1-7/8	1-1/4	2-7/8	4-1/4	1-5/8	26.0
CIFSC-2G-3/4	2 x 3/4	2	4	4-3/8	4-11/16	31/32	1-7/8	1-9/16	2-7/8	4-1/4	1-5/8	26.0
CIFSC-2G-1	2 x 1	2	4	4-3/8	4-11/16	31/32	1-7/8	1-3/4	2-7/8	4-1/4	1-5/8	26.0
CIFSC-3G-3/4	2 x 3/4	3	4	4-3/8	6-1/2	29/32	1-7/8	1-9/16	2-7/8	6-1/8	1-5/8	41.0



CIFSCC-1G



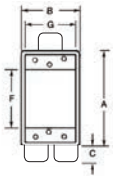

Cat. No.	Hub Size (in.)	No. of Gangs	No. of Lugs	A (in.)	B (in.)	C (in.)	D (in.)	E (in.)	F (in.)	G (in.)	H (in.)	J (in.)	Cu (in.)
FSCC Boxes - 1-7/8 in. Deep (Cast Aluminum)													
CIFSCC-1G-1/2	3 x 1/2	1	3	4-5/16	2-13/16	27/32	1-7/8	1-1/4	2-7/8	2-5/16	1-9/16	1-9/16	14.0
CIFSCC-1G-3/4	3 x 3/4	1	3	4-5/16	2-13/16	27/32	1-7/8	1-1/2	2-7/8	2-5/16	1-9/16	1-3/4	14.0



CIFS-1G-1/2-HV / CIFS-1G-3/4-HV



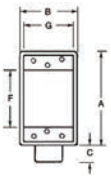

Cat. No.	Hub Size (in.)	No. of Gangs	No. of Lugs	A (in.)	B (in.)	C (in.)	D (in.)	E (in.)	F (in.)	G (in.)	H (in.)	J (in.)	Cu (in.)
347 Volt FS Box Kits - 1-7/8 in. Deep (Cast Aluminum)													
CIFS-1G-1/2-HV*	1 x 1/2	1	3	4-5/8	2-13/16	13/16	1-7/8	1-1/4	2-7/8	2-5/16	1-9/16	–	14.0
CIFS-1G-3/4-HV*	1 x 3/4	1	3	4-5/8	2-13/16	13/16	1-7/8	1-1/2	2-7/8	2-5/16	1-9/16	–	14.0

* For dry locations only
Includes stamped aluminum "CIFS-9HV" 347 V covers (not raintight)

FS Boxes and Covers



CIFSF (1 face)



CIFST (2 faces)

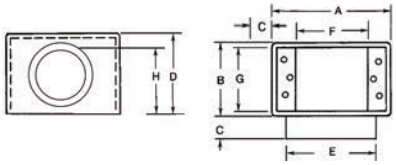

Cat. No.	Hub Size (in.)	No. of Gangs	No. of Lugs	A (in.)	B (in.)	C (in.)	D (in.)	E (in.)	F (in.)	G (in.)	H (in.)	J (in.)	Cu (in.)
FSF Box - 3 in. Deep (Cast Aluminum)													
CIFSF	2	–	–	4-5/16	2-3/4	31/32	2-7/8	2-7/8	2-13/16	2-13/32	1-15/32	–	30.5
FST Box - 3-5/8 in. Deep (Cast Aluminum)													
CIFST	2	–	–	4-5/16	2-3/4	1-3/8	3-3/8	3	2-7/8	2-5/16	2-13/16	–	38.7



CIFSU

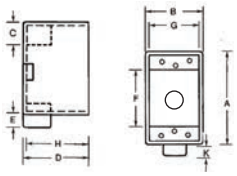

Cat. No.	Hub Size (in.)		No. of Lugs	A (in.)	B (in.)	C (in.)	D (in.)	E (in.)	F (in.)	G (in.)	H (in.)	K (in.)	Cu (in.)
Universal FSU Boxes - 2-3/8 in. Deep (Cast Aluminum)													
	End	Bottom											
CIFSU-1/2	2 x 1/2	1/2	2	4-5/16	2-3/4	13/16	2-3/8	1-1/8	2-13/16	2-1/2	1-29/32	7/16	18.5
CIFSU-3/4	2 x 3/4	3/4	2	4-5/16	2-3/4	13/16	2-3/8	1-1/8	2-13/16	2-1/2	2	7/16	18.5

Supplied with close up plugs



FG-09080

Cat. No.	Description
Mounting Lugs for CI-FSU	
FG-09080	Mounting lugs for a 3-Hole universal FSU box, 2-3/8 in. deep

FS Boxes and Covers

Single Gang


CCD-FS

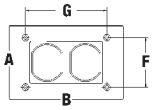


CFSH-G

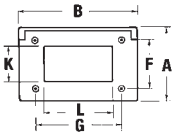


CWPDR

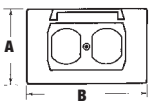


CWPDR-FS

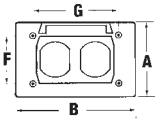

Cat. No.	Description	A (in.)	B (in.)	F (in.)	G (in.)	K (in.)	L (in.)
Single Gang Horizontal Covers (Cast Aluminum)							
CCD-FS	Silver – box mount (zinc)	2-13/16	4-9/16	1-7/8	3-1/4	–	–
CFSH-G	One GFCI receptacle – box mount	2-13/16	4-9/16	1-7/8	3-1/4	1-11/32	2-21/32
CWPDR	One duplex receptacle – device mount	2-13/16	4-9/16	–	–	–	–
CWPDR-FS	One duplex receptacle – box mount	2-13/16	4-9/16	1-7/8	3-1/4	–	–


CFSDR

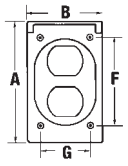


CFSR-G

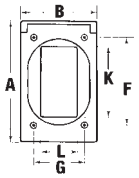


CWPV-G

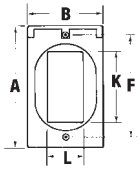

Cat. No.	Description	A (in.)	B (in.)	F (in.)	G (in.)	K (in.)	L (in.)
Single Gang Vertical Covers (Cast Aluminum)							
CFSDR	One duplex receptacle – box mount	4-9/16	2-13/16	3-1/4	1-7/8	–	–
CFSR-G	One GFCI receptacle – box mount	4-9/16	2-13/16	3-1/4		2-21/32	1-11/32
CWPV-G	One GFCI receptacle – device mount	4-9/16	2-13/16	3-1/4	–	2-21/32	1-11/32


CFST

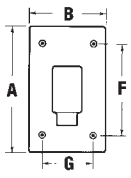


CFSTF

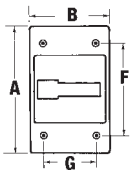

Cat. No.	Description	A (in.)	B (in.)	F (in.)	G (in.)
Single Gang Switch Covers (Cast Aluminum)					
CFST	One plunger – box mount	4-9/16	2-13/16	3-1/4	1-7/8
CFSTF	One lever switch – box mount	4-9/16	2-13/16	3-1/4	1-7/8

FS Boxes and Covers

Single Gang


CCB

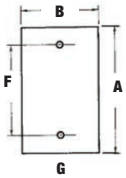


CCB-FS


CFSB

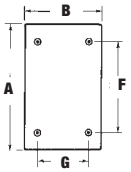


CIFS-100G

Nº de catalogue	Description	A (in.)	B (in.)	F (in.)	G (in.)
Single Gang Blank Covers (Cast Aluminum)					
CCB	Silver – device mount (stamped aluminum)	4-9/16	2-13/16	3-9/32	–
CCB-FS	Silver – box mount (stamped aluminum)	4-9/16	2-13/16	3-1/4	1-7/8
CFSB	Blank – box mount	4-9/16	2-13/16	3-1/4	1-7/8
CIFS-100G	Blank – box mount (gasket glued on cover)	4-3/8	2-14/16	3-1/4	1-7/8

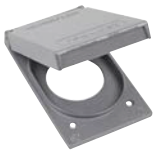
CFSR Series

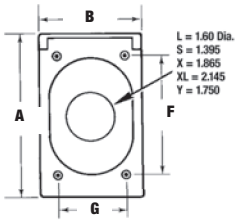

Cat. No.	Description	Nominal Size (in.)	Max. Device Face Dia.	A (in.)	B (in.)	F (in.)	G (in.)
Single Gang Vertical Covers (Cast Aluminum)							
CFSR-L	Single receptacle – box mount	1-9/16	1.600	4-9/16	2-13/16	3-1/4	1-7/8
CFSR-S	Single receptacle – box mount	1-3/8	1.395	4-9/16	2-13/16	3-1/4	1-7/8
CFSR-X	Single receptacle – box mount	1-27/32	1.865	4-9/16	2-13/16	3-1/4	1-7/8
CFSR-XL	Single receptacle – box mount	2-1/8	2.145	4-9/16	2-13/16	3-1/4	1-7/8
CFSR-Y	Single receptacle – box mount	1-3/4	1.750	4-9/16	2-13/16	3-1/4	1-7/8


FS-GKV

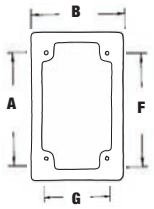

Cat. No.	Description	A (in.)	B (in.)	F (in.)	G (in.)
Single Gang Gasket					
FS-GKV*	Single Gang – box mount – gasket	4-9/16	2-13/16	3-1/4	1-7/8

* CSA not applicable

FS Boxes and Covers

Two Gang


2CWPDR

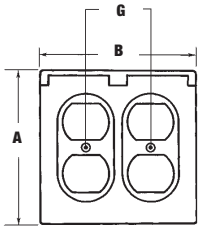


2CWPR-M

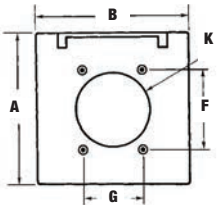


2CFSR-M

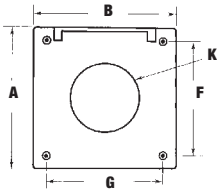


2CFST

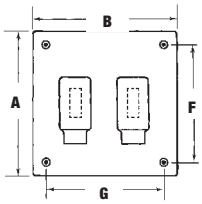


2CCB

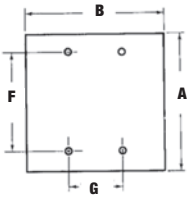


2CFSB

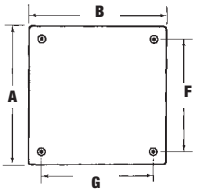

Cat. No.	Description	A (in.)	B (in.)	F (in.)	G (in.)	K (in.)
Two Gang (Cast Aluminum)						
2CWPDR	Two duplex receptacles – device mount	4-9/16	4-5/8	–	1-13/16	–
2CWPR-M	Single receptacle – hole – device mount	4-9/16	4-5/8	2-3/8	1-13/16	2-1/4
2CFSR-M	Single receptacle – hole – box mount	4-9/16	4-5/8	3-3/4	3-3/4	2-1/4
2CFST	Plunger style cover	4-9/16	4-5/8	3-3/4	3-3/4	–
2CCB	Silver – device mount (stamped aluminum)	4-9/16	4-5/8	3-9/32	1-13/16	–
2CFSB	Blank cover – box mount	4-9/16	4-5/8	3-3/4	3-3/4	–

FS Boxes and Covers

Dry-Tite® FS Covers Two Gang


CIFS-42

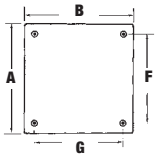


CIFS-62

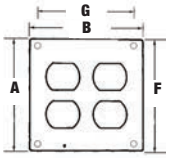


CIFS-69

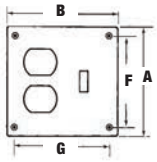


CIFS-92

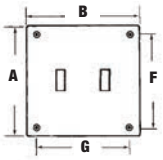

Cat. No.	Description	A (in.)	B (in.)	F (in.)	G (in.)
Two gang FS Covers* (Stamped Aluminum)					
CIFS-42*	Blank – two gang – box mount	4-5/8	4-9/16	3-1/4	3-11/16
CIFS-62*	Two duplex receptacles – box mount	4-5/8	4-9/16	3-1/4	3-11/16
CIFS-69*	One duplex receptacles, one toggle switch – box mount	4-5/8	4-9/16	3-1/4	3-11/16
CIFS-92*	Two toggle switches – box mount	4-5/8	4-9/16	3-1/4	3-11/16

* CIFS covers are CSA approved only


2CDR

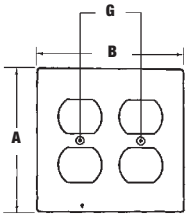


2CTS

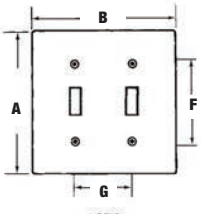


2CTDR

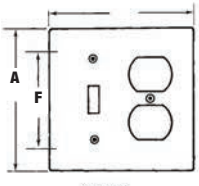

Cat. No.	Description	A (in.)	B (in.)	F (in.)	G (in.)
Two Gang (Cast Aluminum)					
2CDR	Two duplex receptacles – device mount	4-9/16	4-5/8	–	1-13/16
2CTS	Two switch – device mount	4-9/16	4-5/8	2-3/8	1-13/16
2CTDR	One switch and one duplex receptacle – device mount	4-9/16	4-5/8	2-3/8	–

Dry-Tite® covers are approved for dry locations only

FS Boxes and Covers

Dry-Tite® FS Covers Single Gang


CDR

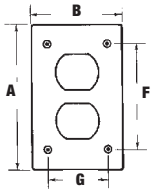


CTS

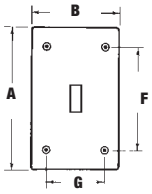

Cat. No.	Description	A (in.)	B (in.)	F (in.)	G (in.)
Single Gang (Cast Aluminum)					
CDR	One duplex receptacle – box mount	4-9/16	2-13/16	3-1/4	1-7/8
CTS	One switch receptacle – box mount	4-9/16	2-13/16	3-1/4	1-7/8


CIFS-4

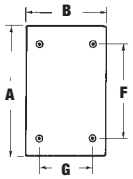


CIFS-7 / CIFS-5

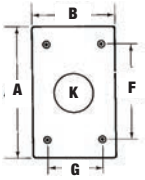


CIFS-6

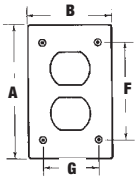


CIFS-9


CIFS-9-HV

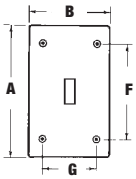

Cat. No.	Description	A (in.)	B (in.)	F (in.)	G (in.)	K (in.)
Single Gang FS Covers (Stamped Aluminum)						
CIFS-4	Blank – single gang – box mount	4-9/16	2-13/16	3-1/4	1-7/8	–
CIFS-5	15 A single receptacle – box mount	4-9/16	2-13/16	3-1/4	1-7/8	1-13/16
CIFS-6	One duplex receptacle – box mount	4-9/16	2-13/16	3-1/4	1-7/8	–
CIFS-7	20 A single locking receptacle – box mount	4-9/16	2-13/16	3-1/4	1-7/8	1-19/32
CIFS-9	One toggle switch – box mount	4-9/16	2-13/16	3-1/4	1-7/8	–
CIFS-9-HV	One toggle switch (347 V) – box mount	4-9/16	2-13/16	3-1/4	1-7/8	–


CRL

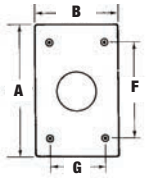

Cat. No.	Description	Nominal Size (in.)	Max. Device Face Dia.	A (in.)	B (in.)	F (in.)	G (in.)
Single Gang (Cast Aluminum)							
CRL	Single receptacle – box mount	1-9/16	1.600	4-9/16	2-13/16	3-1/4	1-7/8
CRS	Single receptacle – box mount	1-3/8	1.395	4-9/16	2-13/16	3-1/4	1-7/8

Dry-Tite® covers are approved for dry locations only

FS Boxes and Covers

Single Gang

All sizes take standard covers and accessories or devices. Integral mounting feet provide easy mounting. Grounding lugs included.

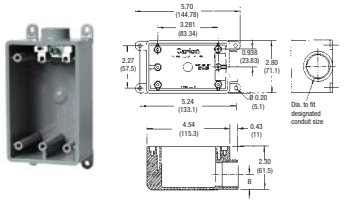

Type FSE

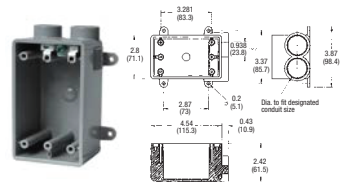

Type FSS

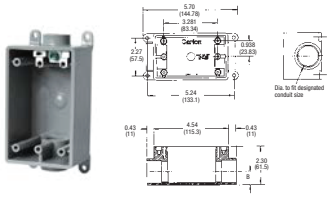

Type FSC

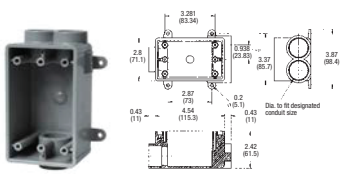

Type FSCC



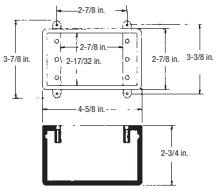

Type FD



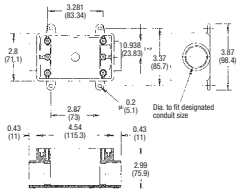

Type FDC



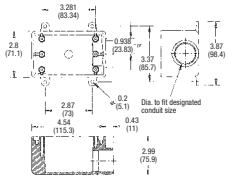

Type FDE

Cat. No.	Description	Size (in.)	Volume Cu. In.	Std. Ctn. Qty.
Type FSE				
C980DFN-CTN	For dead-end terminations.	1/2	18	12
C980EFN-CTN		3/4	18	12
C980FFN-CTN		1	18	8
Type FSS				
C982DFN-CTN	For multiple dead-end circuit terminations or where additional support is required in stub-up applications.	1/2	18	12
C982EFN-CTN		3/4	18	12
C982FFN-CTN		1	18	8
Type FSC				
C981DFN-CTN	For through terminations.	1/2	18	12
C981EFN-CTN		3/4	18	12
C981FFN-CTN		1	18	8
Type FSCC				
C979DFN	For multiple through circuit termintions or where additional support is required in stub-up applications.	1/2	18	15
C979EFN		3/4	18	15
C979FFN		1	18	15

Cat. No.	Description	Size (in.)	Volume Cu. In.	Std. Ctn. Qty.
Type FD				
C981DFN-CTN	For terminations where hub requirements vary according to application – hubs easily made with flared wood bit or hole saw.	–	25	10
Type FDC				
C9811EN	For through terminations where large devices or additional wiring capacity is required.	3/4	25	10
C9811FN		1	25	10
Type FDE				
C9801DN	For dead-end terminations where large devices or additional wiring capacity is required.	1/2	25	10
C9801EN		3/4	25	10
C9801FN		1	25	10

FS Boxes and Covers

Single Gang


E98SRCN-CAR


E98G20N


E98G30N-CAR


E98G5FN-CAR

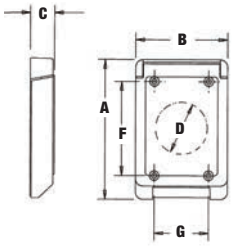

Cat. No.	Description	Colour	A (in.)	B (in.)	C (in.)	D (in.)	F (in.)	G (in.)
Single Gang Vertical Covers (Nonmetallic)								
E98SRCN-CAR	For 15 A or other single receptacles under 1.375 dia.	Grey	4-53/64	3-11/16	53/64	1-25/64 ± 1/16	3-1/4	1-57/64
E98G20N	For 20 A or other single receptacles under 1.625 dia.	Grey	4-53/64	3-11/16	53/64	1-41/64 ± 1-23/32	3-1/4	1-57/64
E98G30N-CAR	For 30 A or other single receptacles under 1.750 dia.	Grey	4-53/64	3-11/16	53/64	1-49/64 ± 1-23/32	3-1/4	1-57/64
E98G5FN-CAR	For 50 A or other single receptacles under 2.250 dia.	Grey	4-53/64	3-11/16	53/64	2-1/4 ± 1/16	3-1/4	1-57/64


E98GCBN


E98SSCN-CAR


E98GDRN-CAR


E98GFCN-CAR

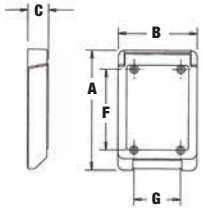

Cat. No.	Description	Colour	A (in.)	B (in.)	C (in.)	F (in.)	G (in.)
Single Gang Vertical Covers (Nonmetallic)							
E98SSCN-CAR	Single switch	Grey	4-53/64	3-11/16	53/64	3-1/4	1-57/64
E98GDRN-CAR	Duplex receptacle	Grey	4-53/64	3-11/16	53/64	3-1/4	1-57/64
E98GFCN-CAR	GFCI receptacle – device opening dimensions: 2-5/8 H x 1-5/16 W	Grey	4-53/64	3-11/16	53/64	3-1/4	1-57/64


E98TSCN

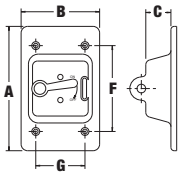


E980CN-CAR

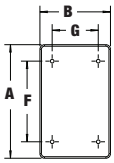

Cat. No.	Description	Colour	A (in.)	B (in.)	C (in.)	F (in.)	G (in.)
Single Gang Vertical Covers (Nonmetallic)							
E98TSCN	Toggle switch	Grey	4-3/4	3	31/32	3-9/32	1-57/64
E980CN-CAR	Supplied with stainless steel mounting screws and gasket	Grey	4-5/8	2-7/8	–	3-9/32	1-57/64
E980CM-CAR	Supplied with stainless steel mounting screws and gasket	White	4-5/8	2-7/8	–	3-9/32	1-57/64


E98DHGN-CAR


E98GHGN-CAR

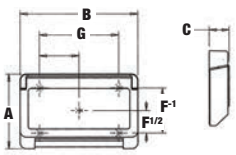

Cat. No.	Description	Colour	A (in.)	B (in.)	C (in.)	F1 (in.)	F1/2 (in.)	G (in.)
Single Gang Horizontal Covers (Nonmetallic)								
E98DHGN-CAR	Duplex receptacle	Grey	3-1/8	4-7/8	13/16	1-57/64	61/64	3-9/32
E98GHGN-CAR	GFCI horizontal	Grey	3-1/8	4-7/8	13/16	1-57/64	61/64	3-9/32

FS Boxes and Covers

Two Gang

All sizes take standard covers and accessories or devices. Integral mounting feet provide easy mounting. Grounding screws are included.

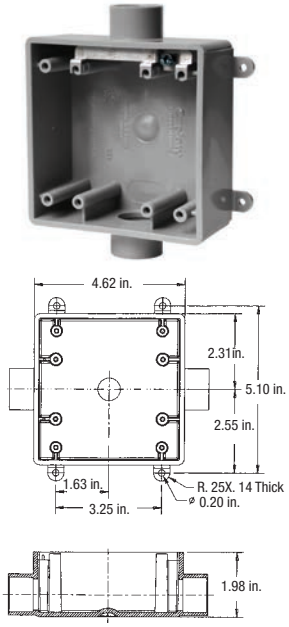

Type 2FSC

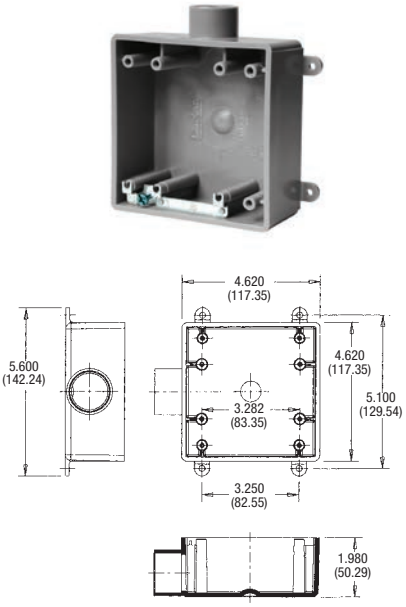

Type 2FSE

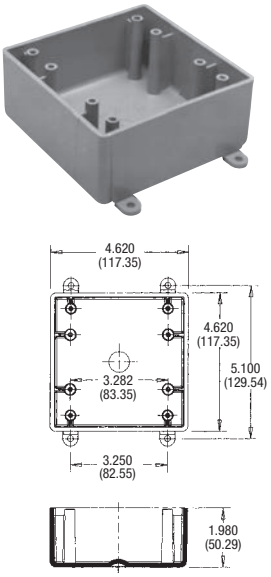

Type FS

Cat. No.	Description	Size (in.)	Volume Cu. In.	Std. Ctn. Qty.
Type 2FSC				
CE9812DR	For through terminations where two devices or additional wiring capacity is required.	1/2	32	4
CE9812E-CTN		3/4	32	10
CE9812FR		1	32	10
Type 2FSE				
CE9802D-CTN	For dead-end terminations where two devices or additional wiring capacity is required.	1/2	18	10
CE9802E-CTN		3/4	18	10
CE9802FR		1	18	1
Type FS				
CE9802	For terminations where hub requirements vary according to application - hubs easily made with flared wood bit or hole saw.	N/A	32	10

FS Boxes and Covers

Two Gang



E9G2DDN-CAR

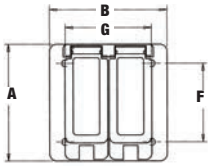



E9G2SSN

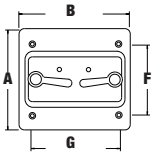



E9G2DSN-CAR



E9G2GTN-CAR

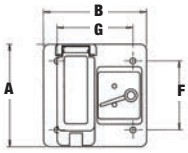

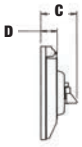



E9802CN-CAR

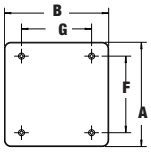

Cat. No.	Description	Colour	A (in.)	B (in.)	C (in.)	D (in.)	F (in.)	G (in.)
Two Gang Covers (Nonmetallic)								
E9G2DDN-CAR	Double duplex	Grey	4-27/34	4-27/34	–	–	3-17/64	3-9/16
E9G2SSN	Double toggle	Grey	4-55/64	3-17/64	–	–	3-17/64	3-9/16
E9802CN-CAR	Supplied with stainless steel mounting screws and gasket	Grey	4-55/64	4-55/64	–	–	3-17/64	3-9/16
E9G2GTN-CAR	Combination toggle / GFCI	Grey	4-55/64	3-17/64	1-53/64	55/64	3-17/64	3-9/16
E9G2DSN-CAR	Combination toggle / duplex receptacle	Grey	4-55/64	3-17/64	1-53/64	55/64	3-17/64	3-9/16

FS Boxes and Covers











Applications :

- FS boxes are CSA approved for wet locations
- FS device boxes are installed in applications that require a rugged unit to accept wiring devices, switches, electronic components and terminal blocks
- FS device boxes provide spacious accessible wiring chambers that are a convenient location to maintain or change a system; pull conductors; make splices or branch conduits
- FS device boxes, when used with an appropriate cover, provide a raintight installation
- Both weatherproof and dry location covers are available

Features/Benefits :

- FS device boxes are sand casted or die casted using copper free (less than 0.004 copper content) aluminum alloys.
- FS device boxes incorporate external hub design that provides maximum wiring capacity
- FS device boxes have precision molded NPT threaded hubs allowing trouble-free field installation of rigid conduit
- FS device boxes are available in 1-7/8 in. and 2-5/8 in. depth
- Carlon® nonmetallic weatherproof FS covers are UV resistant, flame retardant and non-corrosive

Standard Materials :

- CIFS and CIFD device boxes: sand cast, copper free aluminum (less than 0.004 copper content)
- CIFSU: die cast, copper free aluminum (less than 0.004 copper content)
- FS covers: die cast aluminum, sand cast aluminum or nonmetallic

Compliances :

Compliances as noted on each page of the catalogue include:

- CSA Certified
- UL Listed

FS Boxes and Covers



CIFDC-1/2

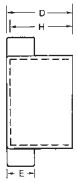

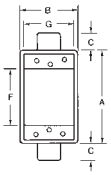

Cat. No.	Hub Size	No. of Gangs	No. of Lugs	A (in.)	B (in.)	C (in.)	D (in.)	E (in.)	F (in.)	G (in.)	H (in.)	Cu (in.)
FDC Boxes - 2-5/8 in. Deep (Cast Aluminum)												
CIFDC-1/2	2 x 1/2	1	2	4-5/16	2-13/16	15/16	2-5/8	1-3/8	2-7/8	2-3/8	2-5/32	22.5
CIFDC-3/4	2 x 3/4	1	2	4-5/16	2-13/16	15/16	2-5/8	1-3/8	2-7/8	2-3/8	2-13/32	22.5
CIFDC-1	2 x 1	1	2	4-5/16	2-13/16	1-3/8	2-5/8	1-5/8	2-7/8	2-3/8	2-13/32	22.5



CIFS-1G



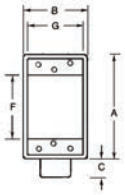



CIFS-2G

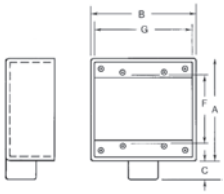



CIFS-3G

Cat. No.	Hub Size	No. of Gangs	No. of Lugs	A (in.)	B (in.)	C (in.)	D (in.)	E (in.)	F (in.)	G (in.)	H (in.)	Cu (in.)
FS Boxes - 1-7/8 in. Deep (Cast Aluminum)												
CIFS-1G-1/2	1 x 1/2	1	3	4-5/16	2-13/16	13/16	1-7/8	1-1/4	2-7/8	2-5/16	1-9/16	14.0
CIFS-1G-3/4	1 x 3/4	1	3	4-5/16	2-13/16	13/16	1-7/8	1-1/2	2-7/8	2-5/16	1-9/16	14.0
CIFS-1G-1	1 x 1	1	3	4-5/16	2-13/16	13/16	1-7/8	1-3/4	2-7/8	2-5/16	1-9/16	14.0
CIFS-2G-1/2	1 x 1/2	2	3	4-3/8	4-11/16	7/8	1-7/8	1-1/4	2-7/8	4-1/4	1-5/8	26.0
CIFS-2G-3/4	1 x 3/4	2	3	4-3/8	4-11/16	7/8	1-7/8	1-9/16	2-7/8	4-1/4	1-5/8	26.0
CIFS-2G-1	1 x 1	2	3	4-3/8	4-11/16	7/8	1-7/8	1-3/4	2-7/8	4-1/4	1-5/8	26.0
CIFS-3G-1/2	1 x 1/2	3	3	4-3/8	6-1/2	7/8	1-7/8	1-1/4	2-7/8	6-1/16	1-5/8	41.0
CIFS-3G-3/4	1 x 3/4	3	3	4-3/8	6-1/2	7/8	1-7/8	1-9/16	2-7/8	6-1/16	1-5/8	41.0

FS Boxes and Covers



CIFSC-1G



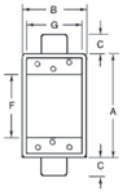



CIFSC-3G-3/4

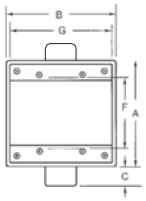

Cat. No.	Hub Size (in.)	No. of Gangs	No. of Lugs	A (in.)	B (in.)	C (in.)	D (in.)	E (in.)	F (in.)	G (in.)	H (in.)	Cu (in.)
FSC Boxes - 1-7/8 in. Deep (Cast Aluminum)												
CIFSC-1G-1/2	2 x 1/2	1	4	4-5/16	2-13/16	27/32	1-7/8	1-1/4	2-7/8	2-5/16	1-9/16	14.0
CIFSC-1G-3/4	2 x 3/4	1	4	4-5/16	2-13/16	27/32	1-7/8	1-1/2	2-7/8	2-5/16	1-9/16	14.0
CIFSC-1G-1	2 x 1	1	4	4-5/16	2-13/16	27/32	1-7/8	1-3/4	2-7/8	2-5/16	1-9/16	14.0
CIFSC-2G-1/2	2 x 1/2	2	4	4-3/8	4-11/16	31/32	1-7/8	1-1/4	2-7/8	4-1/4	1-5/8	26.0
CIFSC-2G-3/4	2 x 3/4	2	4	4-3/8	4-11/16	31/32	1-7/8	1-9/16	2-7/8	4-1/4	1-5/8	26.0
CIFSC-2G-1	2 x 1	2	4	4-3/8	4-11/16	31/32	1-7/8	1-3/4	2-7/8	4-1/4	1-5/8	26.0
CIFSC-3G-3/4	2 x 3/4	3	4	4-3/8	6-1/2	29/32	1-7/8	1-9/16	2-7/8	6-1/8	1-5/8	41.0



CIFSCC-1G



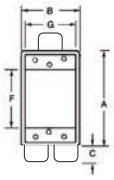

Cat. No.	Hub Size (in.)	No. of Gangs	No. of Lugs	A (in.)	B (in.)	C (in.)	D (in.)	E (in.)	F (in.)	G (in.)	H (in.)	J (in.)	Cu (in.)
FSCC Boxes - 1-7/8 in. Deep (Cast Aluminum)													
CIFSCC-1G-1/2	3 x 1/2	1	3	4-5/16	2-13/16	27/32	1-7/8	1-1/4	2-7/8	2-5/16	1-9/16	1-9/16	14.0
CIFSCC-1G-3/4	3 x 3/4	1	3	4-5/16	2-13/16	27/32	1-7/8	1-1/2	2-7/8	2-5/16	1-9/16	1-3/4	14.0



CIFS-1G-1/2-HV / CIFS-1G-3/4-HV



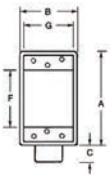

Cat. No.	Hub Size (in.)	No. of Gangs	No. of Lugs	A (in.)	B (in.)	C (in.)	D (in.)	E (in.)	F (in.)	G (in.)	H (in.)	J (in.)	Cu (in.)
347 Volt FS Box Kits - 1-7/8 in. Deep (Cast Aluminum)													
CIFS-1G-1/2-HV*	1 x 1/2	1	3	4-5/8	2-13/16	13/16	1-7/8	1-1/4	2-7/8	2-5/16	1-9/16	–	14.0
CIFS-1G-3/4-HV*	1 x 3/4	1	3	4-5/8	2-13/16	13/16	1-7/8	1-1/2	2-7/8	2-5/16	1-9/16	–	14.0

* For dry locations only
Includes stamped aluminum "CIFS-9HV" 347 V covers (not raintight)

FS Boxes and Covers



CIFSF (1 face)



CIFST (2 faces)

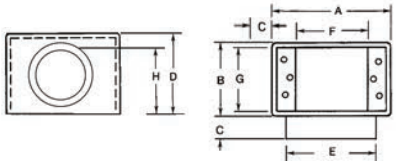

Cat. No.	Hub Size (in.)	No. of Gangs	No. of Lugs	A (in.)	B (in.)	C (in.)	D (in.)	E (in.)	F (in.)	G (in.)	H (in.)	J (in.)	Cu (in.)
FSF Box - 3 in. Deep (Cast Aluminum)													
CIFSF	2	–	–	4-5/16	2-3/4	31/32	2-7/8	2-7/8	2-13/16	2-13/32	1-15/32	–	30.5
FST Box - 3-5/8 in. Deep (Cast Aluminum)													
CIFST	2	–	–	4-5/16	2-3/4	1-3/8	3-3/8	3	2-7/8	2-5/16	2-13/16	–	38.7



CIFSU

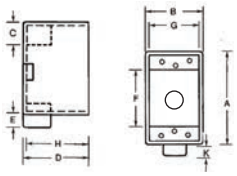

Cat. No.	Hub Size (in.)		No. of Lugs	A (in.)	B (in.)	C (in.)	D (in.)	E (in.)	F (in.)	G (in.)	H (in.)	K (in.)	Cu (in.)
Universal FSU Boxes - 2-3/8 in. Deep (Cast Aluminum)													
	End	Bottom											
CIFSU-1/2	2 x 1/2	1/2	2	4-5/16	2-3/4	13/16	2-3/8	1-1/8	2-13/16	2-1/2	1-29/32	7/16	18.5
CIFSU-3/4	2 x 3/4	3/4	2	4-5/16	2-3/4	13/16	2-3/8	1-1/8	2-13/16	2-1/2	2	7/16	18.5

Supplied with close up plugs



FG-09080

Cat. No.	Description
Mounting Lugs for CI-FSU	
FG-09080	Mounting lugs for a 3-Hole universal FSU box, 2-3/8 in. deep

FS Boxes and Covers

Single Gang


CCD-FS

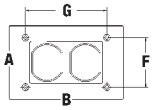


CFSH-G

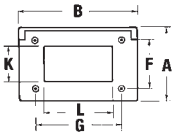


CWPDR

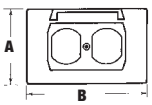


CWPDR-FS

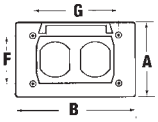

Cat. No.	Description	A (in.)	B (in.)	F (in.)	G (in.)	K (in.)	L (in.)
Single Gang Horizontal Covers (Cast Aluminum)							
CCD-FS	Silver – box mount (zinc)	2-13/16	4-9/16	1-7/8	3-1/4	–	–
CFSH-G	One GFCI receptacle – box mount	2-13/16	4-9/16	1-7/8	3-1/4	1-11/32	2-21/32
CWPDR	One duplex receptacle – device mount	2-13/16	4-9/16	–	–	–	–
CWPDR-FS	One duplex receptacle – box mount	2-13/16	4-9/16	1-7/8	3-1/4	–	–


CFSDR

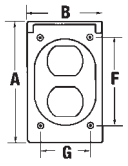


CFSR-G

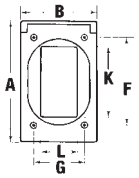


CWPV-G

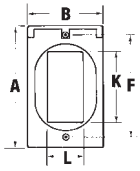

Cat. No.	Description	A (in.)	B (in.)	F (in.)	G (in.)	K (in.)	L (in.)
Single Gang Vertical Covers (Cast Aluminum)							
CFSDR	One duplex receptacle – box mount	4-9/16	2-13/16	3-1/4	1-7/8	–	–
CFSR-G	One GFCI receptacle – box mount	4-9/16	2-13/16	3-1/4		2-21/32	1-11/32
CWPV-G	One GFCI receptacle – device mount	4-9/16	2-13/16	3-1/4	–	2-21/32	1-11/32


CFST

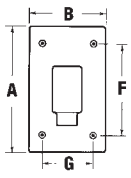


CFSTF

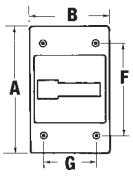

Cat. No.	Description	A (in.)	B (in.)	F (in.)	G (in.)
Single Gang Switch Covers (Cast Aluminum)					
CFST	One plunger – box mount	4-9/16	2-13/16	3-1/4	1-7/8
CFSTF	One lever switch – box mount	4-9/16	2-13/16	3-1/4	1-7/8

FS Boxes and Covers

Single Gang


CCB

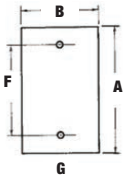


CCB-FS


CFSB

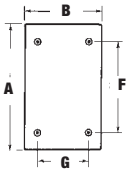


CIFS-100G

Nº de catalogue	Description	A (in.)	B (in.)	F (in.)	G (in.)
Single Gang Blank Covers (Cast Aluminum)					
CCB	Silver – device mount (stamped aluminum)	4-9/16	2-13/16	3-9/32	–
CCB-FS	Silver – box mount (stamped aluminum)	4-9/16	2-13/16	3-1/4	1-7/8
CFSB	Blank – box mount	4-9/16	2-13/16	3-1/4	1-7/8
CIFS-100G	Blank – box mount (gasket glued on cover)	4-3/8	2-14/16	3-1/4	1-7/8

3.4

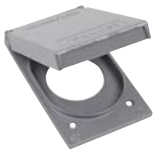
CFSR Series

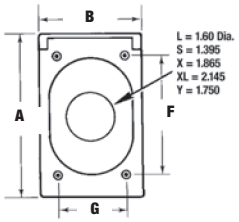

Cat. No.	Description	Nominal Size (in.)	Max. Device Face Dia.	A (in.)	B (in.)	F (in.)	G (in.)
Single Gang Vertical Covers (Cast Aluminum)							
CFSR-L	Single receptacle – box mount	1-9/16	1.600	4-9/16	2-13/16	3-1/4	1-7/8
CFSR-S	Single receptacle – box mount	1-3/8	1.395	4-9/16	2-13/16	3-1/4	1-7/8
CFSR-X	Single receptacle – box mount	1-27/32	1.865	4-9/16	2-13/16	3-1/4	1-7/8
CFSR-XL	Single receptacle – box mount	2-1/8	2.145	4-9/16	2-13/16	3-1/4	1-7/8
CFSR-Y	Single receptacle – box mount	1-3/4	1.750	4-9/16	2-13/16	3-1/4	1-7/8


FS-GKV

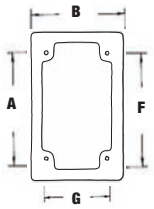

Cat. No.	Description	A (in.)	B (in.)	F (in.)	G (in.)
Single Gang Gasket					
FS-GKV*	Single Gang – box mount – gasket	4-9/16	2-13/16	3-1/4	1-7/8

* CSA not applicable

FS Boxes and Covers

Two Gang


2CWPDR

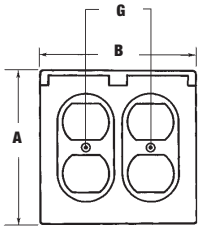


2CWPR-M

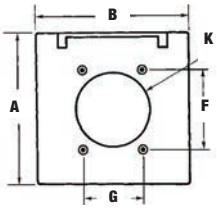


2CFSR-M

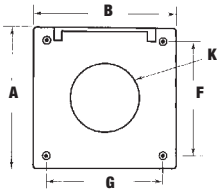


2CFST

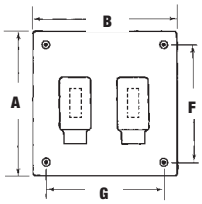


2CCB

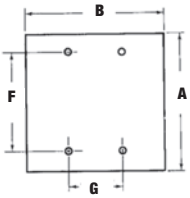


2CFSB

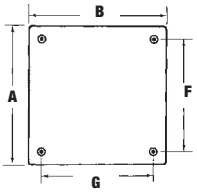

Cat. No.	Description	A (in.)	B (in.)	F (in.)	G (in.)	K (in.)
Two Gang (Cast Aluminum)						
2CWPDR	Two duplex receptacles – device mount	4-9/16	4-5/8	–	1-13/16	–
2CWPR-M	Single receptacle – hole – device mount	4-9/16	4-5/8	2-3/8	1-13/16	2-1/4
2CFSR-M	Single receptacle – hole – box mount	4-9/16	4-5/8	3-3/4	3-3/4	2-1/4
2CFST	Plunger style cover	4-9/16	4-5/8	3-3/4	3-3/4	–
2CCB	Silver – device mount (stamped aluminum)	4-9/16	4-5/8	3-9/32	1-13/16	–
2CFSB	Blank cover – box mount	4-9/16	4-5/8	3-3/4	3-3/4	–

FS Boxes and Covers

Dry-Tite® FS Covers Two Gang


CIFS-42

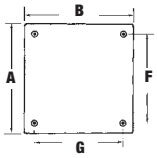


CIFS-62

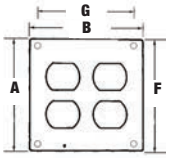


CIFS-69

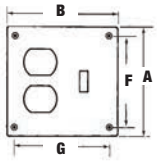


CIFS-92

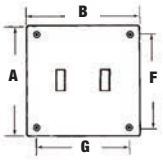

Cat. No.	Description	A (in.)	B (in.)	F (in.)	G (in.)
Two gang FS Covers* (Stamped Aluminum)					
CIFS-42*	Blank – two gang – box mount	4-5/8	4-9/16	3-1/4	3-11/16
CIFS-62*	Two duplex receptacles – box mount	4-5/8	4-9/16	3-1/4	3-11/16
CIFS-69*	One duplex receptacles, one toggle switch – box mount	4-5/8	4-9/16	3-1/4	3-11/16
CIFS-92*	Two toggle switches – box mount	4-5/8	4-9/16	3-1/4	3-11/16

* CIFS covers are CSA approved only


2CDR

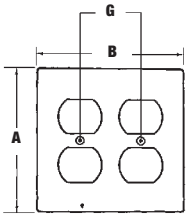


2CTS

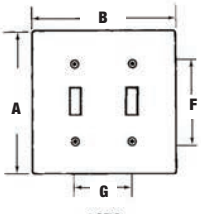


2CTDR

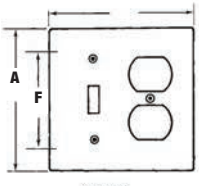

Cat. No.	Description	A (in.)	B (in.)	F (in.)	G (in.)
Two Gang (Cast Aluminum)					
2CDR	Two duplex receptacles – device mount	4-9/16	4-5/8	–	1-13/16
2CTS	Two switch – device mount	4-9/16	4-5/8	2-3/8	1-13/16
2CTDR	One switch and one duplex receptacle – device mount	4-9/16	4-5/8	2-3/8	–

Dry-Tite® covers are approved for dry locations only

FS Boxes and Covers

Dry-Tite® FS Covers Single Gang


CDR

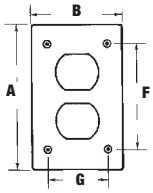


CTS

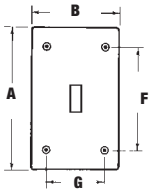

Cat. No.	Description	A (in.)	B (in.)	F (in.)	G (in.)
Single Gang (Cast Aluminum)					
CDR	One duplex receptacle – box mount	4-9/16	2-13/16	3-1/4	1-7/8
CTS	One switch receptacle – box mount	4-9/16	2-13/16	3-1/4	1-7/8


CIFS-4

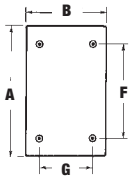


CIFS-7 / CIFS-5

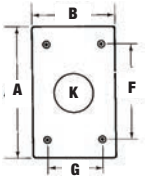


CIFS-6

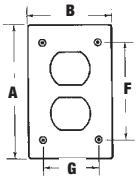


CIFS-9


CIFS-9-HV

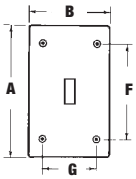

Cat. No.	Description	A (in.)	B (in.)	F (in.)	G (in.)	K (in.)
Single Gang FS Covers (Stamped Aluminum)						
CIFS-4	Blank – single gang – box mount	4-9/16	2-13/16	3-1/4	1-7/8	–
CIFS-5	15 A single receptacle – box mount	4-9/16	2-13/16	3-1/4	1-7/8	1-13/16
CIFS-6	One duplex receptacle – box mount	4-9/16	2-13/16	3-1/4	1-7/8	–
CIFS-7	20 A single locking receptacle – box mount	4-9/16	2-13/16	3-1/4	1-7/8	1-19/32
CIFS-9	One toggle switch – box mount	4-9/16	2-13/16	3-1/4	1-7/8	–
CIFS-9-HV	One toggle switch (347 V) – box mount	4-9/16	2-13/16	3-1/4	1-7/8	–


CRL

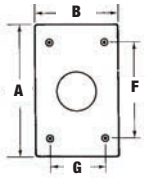

Cat. No.	Description	Nominal Size (in.)	Max. Device Face Dia.	A (in.)	B (in.)	F (in.)	G (in.)
Single Gang (Cast Aluminum)							
CRL	Single receptacle – box mount	1-9/16	1.600	4-9/16	2-13/16	3-1/4	1-7/8
CRS	Single receptacle – box mount	1-3/8	1.395	4-9/16	2-13/16	3-1/4	1-7/8

Dry-Tite® covers are approved for dry locations only

FS Boxes and Covers

Single Gang

All sizes take standard covers and accessories or devices. Integral mounting feet provide easy mounting. Grounding lugs included.

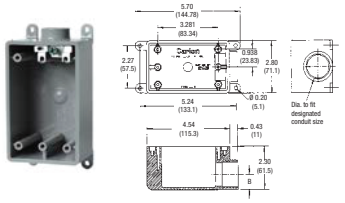

Type FSE

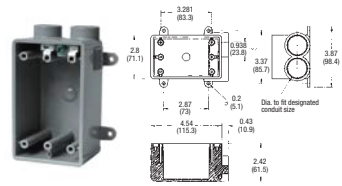

Type FSS

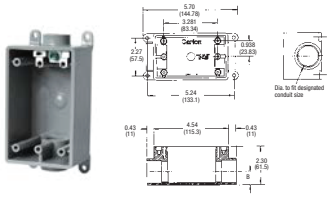

Type FSC

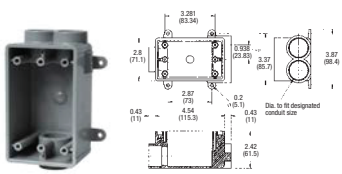

Type FSCC



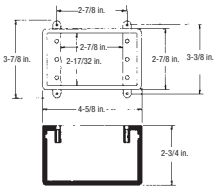

Type FD



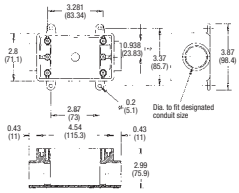

Type FDC



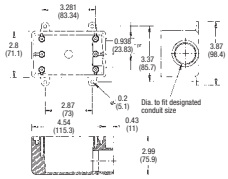

Type FDE

Cat. No.	Description	Size (in.)	Volume Cu. In.	Std. Ctn. Qty.
Type FSE				
C980DFN-CTN	For dead-end terminations.	1/2	18	12
C980EFN-CTN		3/4	18	12
C980FFN-CTN		1	18	8
Type FSS				
C982DFN-CTN	For multiple dead-end circuit terminations or where additional support is required in stub-up applications.	1/2	18	12
C982EFN-CTN		3/4	18	12
C982FFN-CTN		1	18	8
Type FSC				
C981DFN-CTN	For through terminations.	1/2	18	12
C981EFN-CTN		3/4	18	12
C981FFN-CTN		1	18	8
Type FSCC				
C979DFN	For multiple through circuit termintions or where additional support is required in stub-up applications.	1/2	18	15
C979EFN		3/4	18	15
C979FFN		1	18	15

Cat. No.	Description	Size (in.)	Volume Cu. In.	Std. Ctn. Qty.
Type FD				
C981DFN-CTN	For terminations where hub requirements vary according to application – hubs easily made with flared wood bit or hole saw.	–	25	10
Type FDC				
C9811EN	For through terminations where large devices or additional wiring capacity is required.	3/4	25	10
C9811FN		1	25	10
Type FDE				
C9801DN	For dead-end terminations where large devices or additional wiring capacity is required.	1/2	25	10
C9801EN		3/4	25	10
C9801FN		1	25	10

FS Boxes and Covers

Single Gang


E98SRCN-CAR


E98G20N


E98G30N-CAR


E98G5FN-CAR

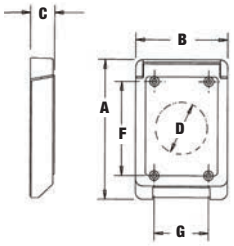

Cat. No.	Description	Colour	A (in.)	B (in.)	C (in.)	D (in.)	F (in.)	G (in.)
Single Gang Vertical Covers (Nonmetallic)								
E98SRCN-CAR	For 15 A or other single receptacles under 1.375 dia.	Grey	4-53/64	3-11/16	53/64	1-25/64 ± 1/16	3-1/4	1-57/64
E98G20N	For 20 A or other single receptacles under 1.625 dia.	Grey	4-53/64	3-11/16	53/64	1-41/64 ± 1-23/32	3-1/4	1-57/64
E98G30N-CAR	For 30 A or other single receptacles under 1.750 dia.	Grey	4-53/64	3-11/16	53/64	1-49/64 ± 1-23/32	3-1/4	1-57/64
E98G5FN-CAR	For 50 A or other single receptacles under 2.250 dia.	Grey	4-53/64	3-11/16	53/64	2-1/4 ± 1/16	3-1/4	1-57/64


E98GCBN


E98SSCN-CAR


E98GDRN-CAR


E98GFCN-CAR

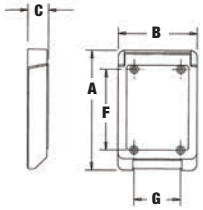

Cat. No.	Description	Colour	A (in.)	B (in.)	C (in.)	F (in.)	G (in.)
Single Gang Vertical Covers (Nonmetallic)							
E98SSCN-CAR	Single switch	Grey	4-53/64	3-11/16	53/64	3-1/4	1-57/64
E98GDRN-CAR	Duplex receptacle	Grey	4-53/64	3-11/16	53/64	3-1/4	1-57/64
E98GFCN-CAR	GFCI receptacle – device opening dimensions: 2-5/8 H x 1-5/16 W	Grey	4-53/64	3-11/16	53/64	3-1/4	1-57/64


E98TSCN

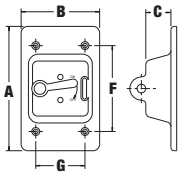


E980CN-CAR

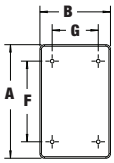

Cat. No.	Description	Colour	A (in.)	B (in.)	C (in.)	F (in.)	G (in.)
Single Gang Vertical Covers (Nonmetallic)							
E98TSCN	Toggle switch	Grey	4-3/4	3	31/32	3-9/32	1-57/64
E980CN-CAR	Supplied with stainless steel mounting screws and gasket	Grey	4-5/8	2-7/8	–	3-9/32	1-57/64
E980CM-CAR	Supplied with stainless steel mounting screws and gasket	White	4-5/8	2-7/8	–	3-9/32	1-57/64


E98DHGN-CAR


E98GHGN-CAR

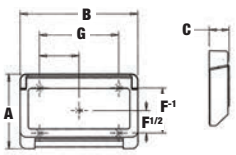

Cat. No.	Description	Colour	A (in.)	B (in.)	C (in.)	F1 (in.)	F1/2 (in.)	G (in.)
Single Gang Horizontal Covers (Nonmetallic)								
E98DHGN-CAR	Duplex receptacle	Grey	3-1/8	4-7/8	13/16	1-57/64	61/64	3-9/32
E98GHGN-CAR	GFCI horizontal	Grey	3-1/8	4-7/8	13/16	1-57/64	61/64	3-9/32

FS Boxes and Covers

Two Gang

All sizes take standard covers and accessories or devices. Integral mounting feet provide easy mounting. Grounding screws are included.

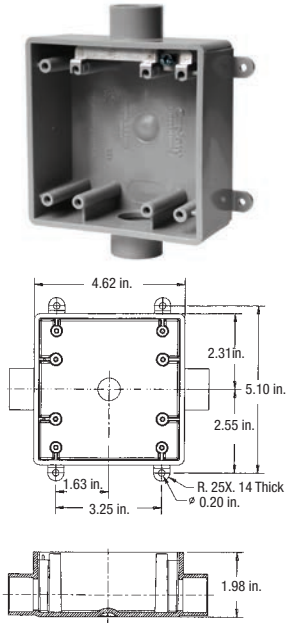

Type 2FSC

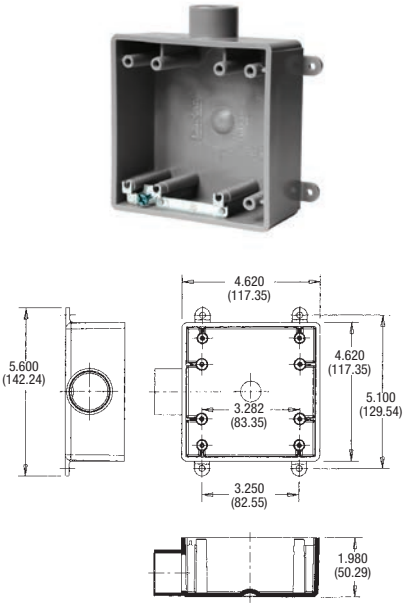

Type 2FSE

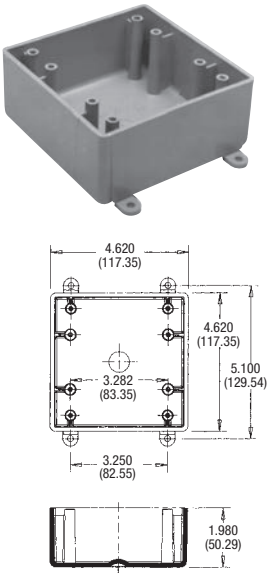

Type FS

Cat. No.	Description	Size (in.)	Volume Cu. In.	Std. Ctn. Qty.
Type 2FSC				
CE9812DR	For through terminations where two devices or additional wiring capacity is required.	1/2	32	4
CE9812E-CTN		3/4	32	10
CE9812FR		1	32	10
Type 2FSE				
CE9802D-CTN	For dead-end terminations where two devices or additional wiring capacity is required.	1/2	18	10
CE9802E-CTN		3/4	18	10
CE9802FR		1	18	1
Type FS				
CE9802	For terminations where hub requirements vary according to application - hubs easily made with flared wood bit or hole saw.	N/A	32	10

FS Boxes and Covers

Two Gang



E9G2DDN-CAR

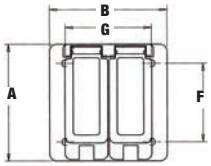



E9G2SSN

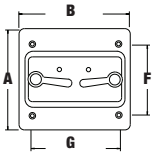



E9G2DSN-CAR



E9G2GTN-CAR

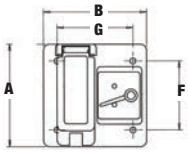

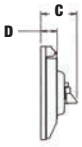



E9802CN-CAR

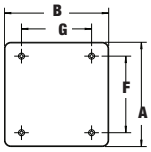

Cat. No.	Description	Colour	A (in.)	B (in.)	C (in.)	D (in.)	F (in.)	G (in.)
Two Gang Covers (Nonmetallic)								
E9G2DDN-CAR	Double duplex	Grey	4-27/34	4-27/34	–	–	3-17/64	3-9/16
E9G2SSN	Double toggle	Grey	4-55/64	3-17/64	–	–	3-17/64	3-9/16
E9802CN-CAR	Supplied with stainless steel mounting screws and gasket	Grey	4-55/64	4-55/64	–	–	3-17/64	3-9/16
E9G2GTN-CAR	Combination toggle / GFCI	Grey	4-55/64	3-17/64	1-53/64	55/64	3-17/64	3-9/16
E9G2DSN-CAR	Combination toggle / duplex receptacle	Grey	4-55/64	3-17/64	1-53/64	55/64	3-17/64	3-9/16

Star Teck® (ST) – Series Fittings for Teck and ACWU Cable

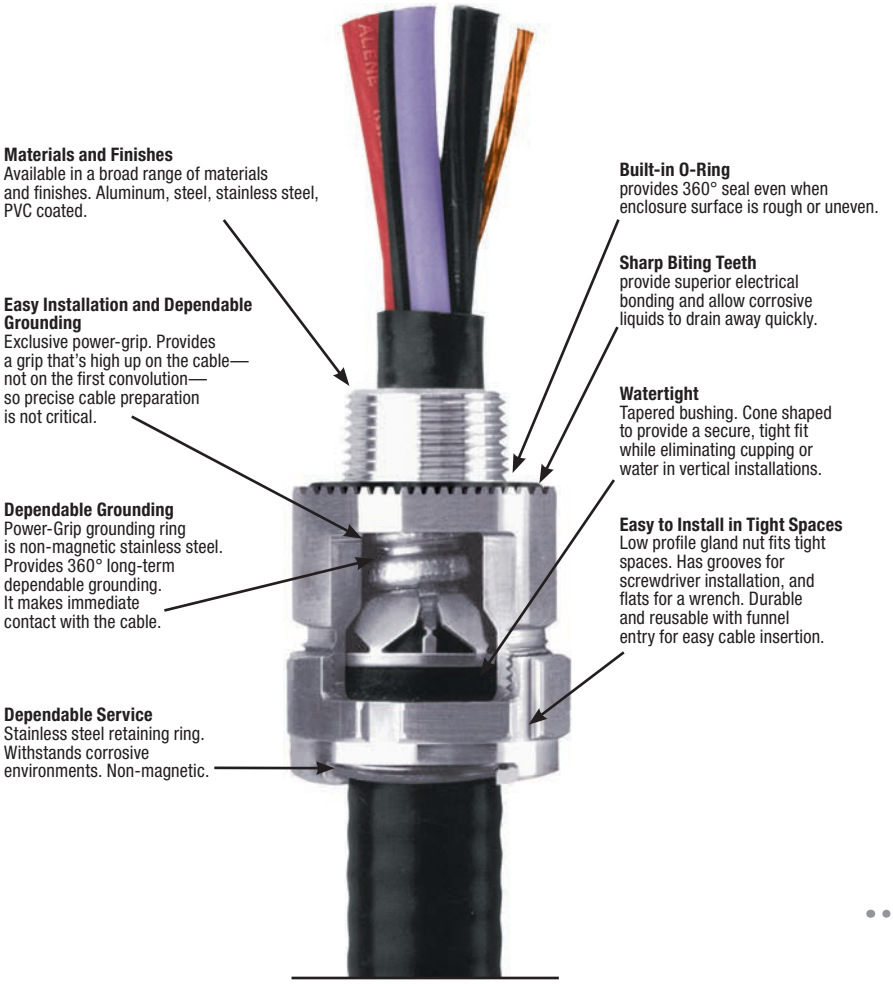

Materials and Finishes
Available in a broad range of materials and finishes. Aluminum, steel, stainless steel, PVC coated.

Easy Installation and Dependable Grounding
Exclusive power-grip. Provides a grip that's high up on the cable—not on the first convolution—so precise cable preparation is not critical.

Dependable Grounding
Power-Grip grounding ring is non-magnetic stainless steel. Provides 360° long-term dependable grounding. It makes immediate contact with the cable.

Dependable Service
Stainless steel retaining ring. Withstands corrosive environments. Non-magnetic.

Built-in O-Ring
provides 360° seal even when enclosure surface is rough or uneven.

Sharp Biting Teeth
provide superior electrical bonding and allow corrosive liquids to drain away quickly.

Watertight
Tapered bushing. Cone shaped to provide a secure, tight fit while eliminating cupping or water in vertical installations.

Easy to Install in Tight Spaces
Low profile gland nut fits tight spaces. Has grooves for screwdriver installation, and flats for a wrench. Durable and reusable with funnel entry for easy cable insertion.

Easy Installation



1. Prepare cable

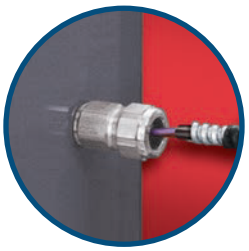

2. Insert cable



3. Tighten gland nut

Warning:

Always ensure that the system is de-energized before performing any installation.

Suggested specifications for metal-clad cable or teck cable fittings in hazardous locations:

1. All metal-clad cable fittings for jacketed and non-jacketed interlocked armour cable, continuous corrugated cable or teck cable shall be approved by a nationally recognized testing laboratory, inspection agency or product evaluation organization.
2. Where corrugated-jacketed, metal-clad cable exposed to intermittent or continuous moisture is terminated into a threaded opening, the fitting shall be watertight type furnished with:

a. an elastomeric beveled bushing.

b. a funnel entry, splined gland nut.

c. a non-magnetic, stainless steel grounding device with dual grounding action.

d. a taper threaded hub.

e. a hexagonal body and gland nut as manufactured by Thomas & Betts (aluminum Series ST050-464).

f. a built in sealing O-ring on hub side.

3. With single conductor cable and/or in corrosive environments, aluminum fittings such as Thomas & Betts Series ST050-464 shall be installed. Where explosion-proof or dust-ignition-proof boxes are required by the code, Star Teck® fittings must be used in conjunction with an approved sealing fitting.

Star Teck® (ST) – Series Fittings for Teck and ACWU Cable



3.5

Star Teck® (ST Series)

Star Teck® cable fittings are designed to accommodate a broad range of cables, thereby minimizing the possibility of mismatched cables and fittings in the field. They are available in hub sizes from 1/2 to 4 inches, and will handle outer jacket diameters from 0.525 to 4.340 inches.

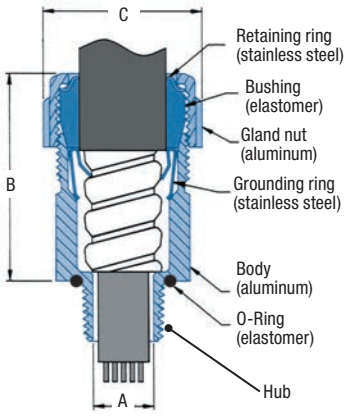

Cat. No.	Hub Size (in.)	Range Over Jacket (in.)		Dimensions (in.)		
		min.	max.	A	B*	C
ST038-461S†	3/8	0.344	0.535	0.344	2.020	0.995
ST050-462	1/2	0.525	0.650	0.390	2.020	1.224
ST050-464	1/2	0.600	0.760	0.480	2.020	1.363
ST050-465	1/2	0.725	0.885	0.607	2.133	1.633
ST050-466	1/2	0.825	0.985	0.607	2.133	1.633
ST075-467	3/4	0.880	1.065	0.809	2.450	2.080
ST075-468	3/4	1.025	1.205	0.809	2.450	2.080
ST100-469	1	1.187	1.375	1.034	2.601	2.230
ST125-470	1-1/4	1.350	1.625	1.177	3.282	2.824
ST125-550	1-1/4	1.500	1.625	1.365	3.282	2.824
ST125-471	1-1/4	1.600	1.875	1.365	3.282	2.824
ST150-472	1-1/2	1.700	1.965	1.552	3.620	3.260
ST150-473	1-1/2	1.900	2.187	1.595	3.620	3.260
ST200-551	2	1.900	2.187	1.710	3.640	3.620
ST200-474	2	2.100	2.375	1.990	3.640	3.620
ST200-475	2	2.300	2.565	2.052	3.640	4.020
ST200-476	2	2.500	2.750	2.052	3.640	4.020
ST250-477	2-1/2	2.380	2.640	2.255	4.700	4.750
ST250-478	2-1/2	2.580	2.840	2.455	4.700	4.750
ST300-479	3	2.790	3.060	2.655	4.700	5.050
ST300-480	3	3.000	3.270	2.885	4.790	5.480
ST300-481	3	3.210	3.480	3.057	4.790	5.480
ST350-482	3-1/2	3.420	3.690	3.285	4.790	5.980
ST350-483	3-1/2	3.610	3.870	3.455	4.790	5.980
ST400-484	4	3.810	4.030	3.625	4.840	6.435
ST400-485	4	3.965	4.185	3.770	4.840	6.435
ST400-486	4	4.120	4.340	3.935	4.840	6.435

* Approximate dimension before installation
† Only available in steel

Materials

Aluminum: The above listed catalogue numbers relate to aluminum fittings. The body and gland nut on hub sizes 1/2 to 1 inch are machined from copper-free bar stock and 1-1/4 to 4 inches are made of cast copper-free aluminum

Steel: To order a steel or malleable iron fitting, add the suffix "S" to the catalogue number (example ST050-464S). The body and gland nut on hub sizes 1/2 to 1 inch are made of steel and 1-1/4 to 4 inches are made of malleable iron. Plating is electro-deposited zinc

Stainless Steel: To order a 316 stainless steel fitting, add the suffix "SS" to the catalogue number (example ST050-464SS). Only available for 1/2 thru 2 inch hub sizes

PVC-Coated Aluminum and Steel: To order, add the suffix "PVC" to the catalogue number (example ST050-464PVC or ST050-464SPVC)

Note - When using fittings on single conductor cable, aluminum fittings and aluminum locknuts must be used

Certifications

Type HLA. CSA Certified Class II, Divisions 1 and 2, Groups E, F, and G; Class III and Enclosure Type 4, Type 4X, Classes I, II and III. Suitable for Class I Division 1 locations when used in combination with a certified Class I sealing fitting. Also suitable for Class I Division 2 when installed in accordance with the applicable electrical code

Complies with IEC requirements for Class I, Zones 1 and 2, when used in combination with a certified Class I hazardous location sealing fitting

UL Listed Class I, Division 2; Class II, Division 2 and Class III. Meets sealing requirements for type 4 enclosures
PVC-coated fittings are only approved for ordinary location areas (OLA)

18 AWG 300V Instrumentation Cable

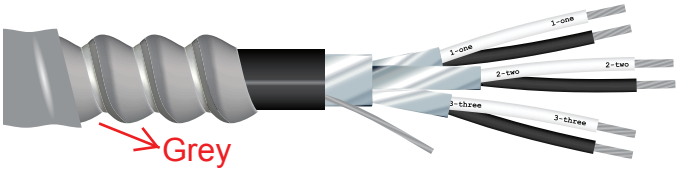

Product Code	AWG Size	# of Pairs or Triads	OD		Weight Aluminum		Weight Steel	
			In	mm	lb/mft	kg/km	lb/mft	kg/km
33H1801X	18	1 Pair	0.6	15.2	160	238	258	384
33H1802X	18	2 Pair	0.78	19.8	247	368	384	572
33H1804X	18	4 Pair	0.88	22.4	340	504	500	744
33H1806X	18	6 Pair	0.98	24.9	420	625	644	958
33H1808X	18	8 Pair	1.03	26.2	543	808	827	1230
33H1812X	18	12 Pair	1.28	32.5	725	1070	1045	1555
33H1816X	18	16 Pair	1.37	34.8	850	1265	1210	1801
33H1824X	18	24 Pair	1.63	41.4	1100	1637	1510	2247
33H1836X	18	36 Pair	1.8	45.7	1465	2180	1960	2917
33K1801X	18	1 Triad	0.61	15.5	175	260	275	409
33K1802X	18	2 Triad	0.81	20.6	275	409	417	621
33K1804X	18	4 Triad	0.93	23.6	385	573	555	826
33K1806X	18	6 Triad	1.115	28.2	535	796	780	1161
33K1808X	18	8 Triad	1.18	30	680	1012	995	1481
33K1812X	18	12 Triad	1.4	35.6	916	1363	1215	1808
33K1816X	18	16 Triad	1.5	38.1	10200	1518	1400	2083
33K1824X	18	24 Triad	1.8	45.7	1335	1987	1775	2642

3.6

18 AWG 600V Instrumentation Cable

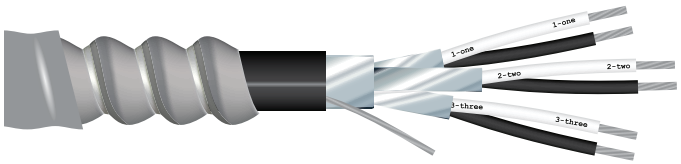

Product Code	AWG Size	# of Pairs or Triads	OD		Weight Aluminum		Weight Steel	
			In	mm	lb/mft	kg/km	lb/mft	kg/km
33I1801X	18	1 Pair	0.61	15.5	154	229	257	382
33I1802X	18	2 Pair	0.82	20.83	238	354	387	575
33I1804X	18	4 Pair	0.96	24.5	355	499	504	750
33I1836X	18	36 Pair	1.85	47.1	1721	2561	2300	3423
33I1850X	18	50 Pair	2.29	58.1	2472	3679	3361	5001
33L1808X	18	8 Triad	1.29	32.8	673	1002	988	1470

14 AWG Multi-Conductor Teck 90 (XLPE) -40°C 600V

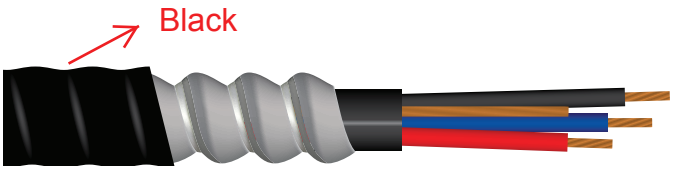

Product Code	No. of Cond.	Bonding AWG (Bare Copper)	Insulation Thickness		Inner Jacket Thickness		Inner Jacket Diameter		Armour Diameter		Outer Jacket Diameter		Weight Aluminum (Armoured)	
			Inches	mm	Inches	mm	Inches	mm	Inches	mm	Inches	mm	lbs/mft	kg/km
3.6.1 **19A1402**	2	14	.030	0.76	0.045	1.14	0.369	9.37	0.600	15.24	0.688	17.48	191	284
19A1403	3	14	.030	0.76	0.045	1.14	0.390	9.91	0.621	15.77	0.709	18.01	225	335
19A1404	4	14	.030	0.76	0.045	1.14	0.444	11.27	0.676	17.17	0.761	19.33	266	396
19A1405	5	14	.030	0.76	0.045	1.14	0.472	11.99	0.703	17.86	0.787	19.99	306	455
19A1406	6	14	.030	0.76	0.045	1.14	0.515	13.08	0.743	18.87	0.828	21.03	316	471
19A1407	7	14	.030	0.76	0.045	1.14	0.522	13.26	0.755	19.18	0.844	21.44	338	502
19A1408	8	14	.030	0.76	0.060	1.52	0.597	15.16	0.825	20.96	0.909	23.09	384	571
19A1410	10	14	.030	0.76	0.060	1.52	0.671	17.04	0.898	22.81	0.984	24.99	448	667
19A1412	12	14	.030	0.76	0.060	1.52	0.700	17.78	0.927	23.55	1.013	25.73	489	728
19A1415	15	14	.030	0.76	0.060	1.52	0.750	19.05	0.990	25.15	1.090	27.69	583	868
19A1420	20	14	.030	0.76	0.060	1.52	0.850	21.59	1.105	28.07	1.189	30.20	766	1140
19A1425	25	14	.030	0.76	0.080	2.03	0.983	24.99	1.239	31.47	1.326	33.68	852	1268
19A1430	30	14	.030	0.76	0.080	2.03	1.060	26.92	1.311	33.30	1.399	35.53	995	1481
19A1440	40	14	.030	0.76	0.080	2.03	1.179	29.95	1.431	36.35	1.519	38.86	124	1822
19A1450	50	14	.030	0.76	0.080	2.03	1.282	32.56	1.535	38.99	1.642	41.71	1468	2184

16 AWG 600V Armcon

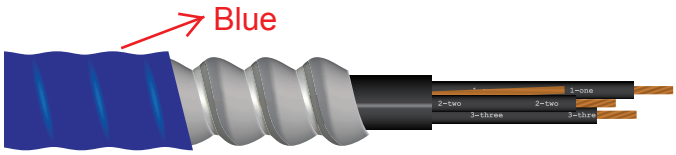

Product Code	# of Cond.	Amp @ 30°C	Nominal OD inner jacket		Nominal OD Armour		Nominal OD Outer Jacket		Weight Aluminum (Armoured)	
			mm	In	mm	In	mm	In	lbs/mft	kg/km
46A1602-40	2	10	8.79	0.35	14.88	0.59	17.73	0.7	195	290.22
46A1603-40	3	10	9.49	0.37	15.6	0.61	18.43	0.73	216.12	321.62
46A1604-40	4	8	10.25	0.4	16.36	0.64	19.2	0.76	238.06	354.27
46A1605-40	5	8	10.92	0.43	17.02	0.67	19.87	0.78	259.84	386.68
46A1606-40	6	8	11.84	0.47	17.93	0.71	20.78	0.82	284.81	423.85
46A1607-40	7	7	12.75	0.5	18.85	0.74	21.69	0.85	310.22	461.66
46A1608-40	8	7	14.46	0.57	20.55	0.81	23.4	0.92	360.81	536.94
46A1610-40	10	7	15.65	0.62	21.74	0.86	24.59	0.97	397.91	592.15
46A1612-40	12	7	16.1	0.63	22.2	0.87	25.05	0.99	427.17	635.7
46A1615-40	15	7	17.32	0.68	23.42	0.92	26.26	1.03	478.14	711.55
46A1620-40	20	7	19.61	0.77	25.2	0.99	28.04	1.1	613.89	913.57
46A1625-40	25	6	22.76	0.9	28.85	1.14	31.7	1.25	759.63	1130.46
46A1630-40	30	6	24.01	0.95	30.1	1.19	32.9	1.3	834.31	1241.59
46A1640-40	40	6	26.72	1.05	32.82	1.29	35.66	1.4	1008.65	1501.04
46A1650-40	50	6	29.59	1.16	35.69	1.41	38.52	1.52	1174.61	1748

3.6.2

16 AWG 600V Armcon Connectors

No. of Cond.	Product Code	Connectors			
		OZG/Crouse Hinds	EGS/Iberville	Explosion Proof	Resin
2	46A1602-40	41TECK0502	41TMC2050075A	41TMC2X050075A	RAPIDEX30
3	46A1603-40	41TECK0503	41TMC2050099A	41TMC2X050099A	RAPIDEX30
4	46A1604-40	41TECK0503	41TMC2050099A	41TMC2X050099A	RAPIDEX30
5	46A1605-40	41TECK0503	41TMC2050099A	41TMC2X050099A	RAPIDEX30
6	46A1606-40	41TECK0503	41TMC2050099A	41TMC2X050099A	RAPIDEX30
7	46A1607-40	41TECK0755	41TMC2075118A	41TMC2X075118A	RAPIDEX30
8	46A1608-40	41TECK0755	41TMC2075118A	41TMC2X075118A	RAPIDEX30
10	46A1610-40	41TECK0755	41TMC2075118A	41TMC2X075118A	RAPIDEX30
12	46A1612-40	41TECK0755	41TMC2075118A	41TMC2X075118A	RAPIDEX30
15	46A1615-40	41TECK0756	41TMC2075118A	41TMC2X075118A	RAPIDEX30
20	46A1620-40	41TECK1007	41TMC2100137A	41TMC2X100137A	RAPIDEX30
25	46A1625-40	41TECK1007	41TMC2100137A	41TMC2X100137A	RAPIDEX30
30	46A1630-40	41TECK1258	41TMC2125162A	41TMC2X125162A	RAPIDEX30
40	46A1640-40	41TECK1258	41TMC2125162A	41TMC2X125162A	RAPIDEX30
50	46A1650-40	41TECK1259	41TMC2125162A	41TMC2X125162A	RAPIDEX30

30

REVIEWED BY CONTRACTOR

Kudlik Construction Ltd.

NAME: Sandra Rousseau P.Eng

DATE: Jul 18, 2018

Mécanique Nordique
Plumbing
Heating
Ventillation
mecanique.nordique@hotmail.com

1255 Rue J.A.Bombardier
Lévis, Québec
G7A 2P4
Téléphone: 418-496-1109
Télécopieur: 418-496-3803

IQALUIT WWTP UPGRADE

DRAWING FOR APPROVAL

Ingineer : NUNAMI STANTEC

DRAWING #: AD-030

Section 23 21 16
Article 2.2.2.2 2.3.5
Plans M-302 M-500 M-602
Application : ROLL GROOVED COUPLINGS & FITTINGS
Brand : GRUVLOK
Model : 7401,7012, 7045 ,7046 & GROOVED FITTINGS
Revised # :
Supplyer : Deschenes

Acceptable for use of Div 23 piping. If intended for Div 22 piping use gaskets to be NSF 61 approved.

Pages incl. 22
Date : **2018-07-18**
By : **Mécanique Nordique Inc.**

STANTEC PROJECT #: 110126045

SUBMITTAL # AD-030

This review by Stantec is for general conformance with the design concept of Stantec's design of the:

- ☐ Architectural
- ☐ Structural
- ☑ Mechanical
- ☐ Electrical
- ☐ Other

Stantec

component(s) only and does not mean that Stantec has verified or approves the shop drawing(s). The Contractor remains solely responsible for the shop drawing(s) and this review by Stantec does not relieve the Contractor of the Contractor's responsibility for errors or omissions in the shop drawing(s) or for meeting all requirements of the contract documents. This review does not mean that Stantec approves the detailed design inherent in the shop drawing, responsibility for which shall remain with the Contractor submitting same, nor does this review mean that Stantec accepts any deviation of the shop drawing(s) from the contract documents. The Contractor is responsible for confirming all dimensions and correlating them at the job site, for all construction means, methods and techniques, and for coordination of construction work of all trades, including coordination of all shop drawings.

- ☐ REVIEWED
- ☑ REVIEWED, AS NOTED
- ☐ REVISE AND RESUBMIT
- ☐ NOT REVIEWED

DATE 2018-07-27

BY Brendan Zrum, P.Eng

PRODUCTS FOR GROOVED PIPING SYSTEM

The Gruvlok® System has been manufactured since the late 1960's. The Gruvlok product line has grown from standard couplings and fittings to today's extensive range of grooved product, plain-end product, butterfly valves, check valves, pump protection components, pipe preparation tools and various accessories.

Gruvlok is part of our overall commitment to provide today's piping industry with tomorrow's products.

c UL us LISTED
FM APPROVED
LPCB
VdS
UPC FOUNDED 1926 IAPMO®
DNV
U.S. GREEN BUILDING COUNCIL MEMBER
Certified to ANSI/NSF 61

For Listings/Approval Details and Limitations, visit our website at www.anvilintl.com or contact an Anvil® Sales Representative.

ISO 9001:2008

INDUSTRY & GOVERNMENT STANDARDS & APPROVALS

ANSI	American National Standards Institute
API	American Petroleum Institute: API Std. 5L, Sect. 7.5
ASHRAE	American Society of Heating, Refrigerating and Air Conditioning Engineers
ASME	American Society of Mechanical Engineers: Power Piping, B 31.1; Chemical Plant and Petroleum Refinery Piping, B 31.3; Refrigeration Piping, B 31.5; Building Services Piping, B 31.9; Slurry Pipelines, B 31.11
ASTM	American Society of Testing and Materials: F 1476, F 1387
AWWA	American Water Works Association: C 606
BV	Bureau Veritas
CDF	California State Fire Marshal
COE	Corps of Engineers: CEGS 15000
CSA	Canadian Standards Association: B 242
DNV	Det Norske Veritas
	Hong Kong Fire Services Board
	New Zealand Insurance Council
	New Zealand Building Act. (1991)
FAA	Federal Aviation Administration: HVAC, Plumbing, Fire Protection
FHA	Federal Housing Administration
FM	Factory Mutual Engineering Corp.
GSA	General Services Administration: 15000 Series
IAPMO	International Association of Plumbing & Mechanical Officials
LPC	Loss Prevention Council
MEA	Materials & Equipment Acceptance
MIL	Military Specifications: MILP-10388 Fittings; MIL-C-10387 Couplings; MIL-P-11087A(CE) Steel Pipe, Grooved MIL-I-45208 Inspection Procedure
NASA	National Aeronautics and Space Administration: 15000 Series
NAVFAC	Naval Facilities Engineering Command: NFGS 15000 Series
NFPA	National Fire Protection Association
NIH	National Institute of Health (Dept. of Health): 15000 Series
NSF	NSF International
NY-BSA	New York Board of Standards and Appeals
NYC	New York City
TVA	Tennessee Valley Authority: Fire protection, storm drains
UL	Underwriter's Laboratories, Inc.
ULC	Underwriter's Laboratories of Canada
	Bureau of Marine Inspection: Salt and fresh water, oil transfer
	Bureau of Public Roads; Div. of Bridges: Drain lines and bridge crossings
	Canadian Coast Guard
	U.S. Coast Guard –Approves each vessel individually
USGBC	United States Green Building Council
VA	Veterans Affairs : 15000 Series
VdS	Verband der Sachversicherer e.V.

Note: Please refer to product specific pages for exact listings and approvals related to a specific size for a specific product.

GRUVLOK® – THE ENGINEERED COUPLING

HOUSING (A) FLEXIBLE OR RIGID

The Gruvlok Coupling housing is designed to self-center around the pipe. The housing encircles and retains the gasket against the application of internal system pressure or vacuum.

The housing key sections fit into and engage the pipe-end grooves around the entire pipe circumference, thus restraining the pipe ends from separation due to the application of internal pressure.

Flexible Couplings provide designed-in clearances between the housing key sections and the pipe grooves to permit both angular and longitudinal movement of the pipe. Rigid couplings grip the pipe and lock the joint into position.

All housings are coated with paint for general service applications. The paint serves to provide protection against normal atmospheric corrosion. However, for couplings used in corrosive environments, hot-dip galvanizing, and stainless steel are available.

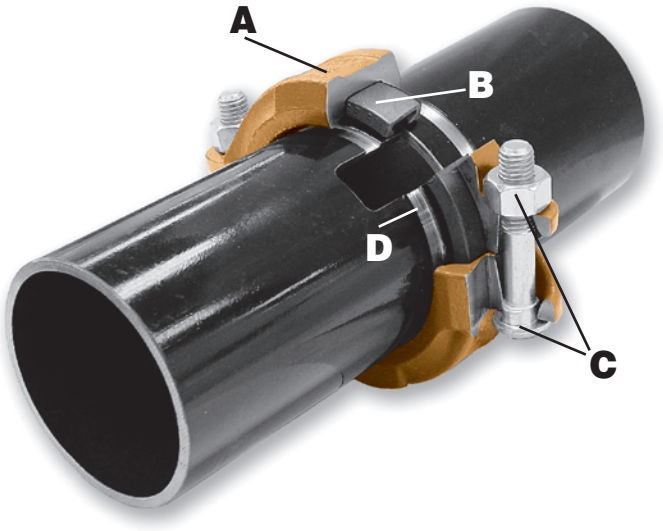

GASKET (B)

The unique single piece "C" style design of the gasket has been engineered to provide a pressure responsive, leak-tight seal in both pressure and vacuum applications without the aid of external forces. The "lips" of the gasket are molded so that upon installation onto the pipe ends they provide compression against the pipe surface to establish the leak-tight seal.

The gasket cavity functions as a "pressure reservoir". Pressure within the pipe system is applied to the internal surfaces of the gasket which increases the sealing force and enhances the leak-tight seal. In vacuum systems, non-pressure-responsive seals tend to "lift off" the pipe, producing leak paths. However, the Gruvlok gasket reacts to the negative pressure (higher outside atmospheric pressure) as to improve the sealing capability of the gasket.

Gasket Reaction to Pressure

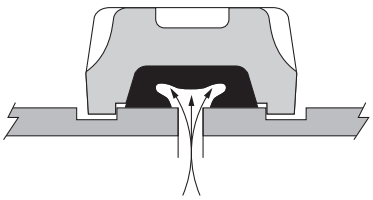

Gasket Reaction to Vacuum

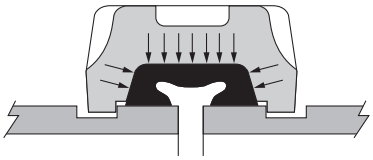

BOLTS AND NUTS (C)

Heat treated oval neck track head bolts serve to connect and secure the housing segments together. The oval neck design prevents turning of the bolt while tightening the hex nut with a single wrench. The bolt size and corresponding wrench (or socket) size for the hex nuts are shown in the chart below.

ANSI

Bolt Size	3/8	1/2	5/8	3/4	7/8	1	1 1/4
Wrench Size	11/16	7/8	1 1/16	1 1/4	1 7/16	1 5/8	2

METRIC

Bolt Size	M10	M12	M16	M20	M22
Wrench Size	16	22	24	30	34

GROOVED PIPE ENDS (D)

The ends of the pipe must have a groove in them which may be either cut grooved or roll grooved. The grooved pipe ends engage the coupling keys, thus, providing a self-restraining, mechanical joint capable of resisting the separation of the pipe ends due to the application of system pressure. The groove diameters must be dimensionally accurate to obtain the maximum benefit of the Gruvlok Coupling.

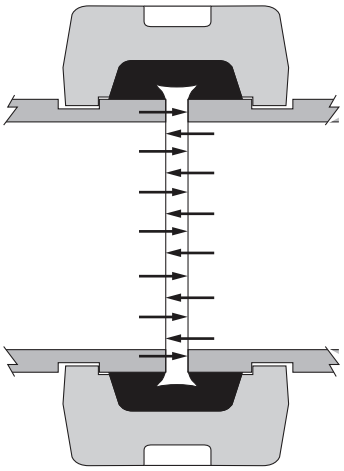

THE GRUVLOK® PIPING METHOD

Gruvlok couplings and grooved-end fittings are widely used for joining pipe in a wide variety of piping systems. Gruvlok couplings for grooved-end pipe are designed to provide a self-centering joint which accommodates the application of pressure, vacuum and other external forces, while limiting the burdensome need for special supports, expansion joints, etc.

The Gruvlok piping method offers many mechanical design features which benefit the design engineer, the contractor, and the end user. Utilization of the functional characteristics of the Gruvlok coupling will aid in pipe system design and must be considered for proper installation, assembly and performance.

The design factors presented in the Gruvlok technical data section should always be referenced to when designing any grooved piping system to obtain the maximum benefit of the Gruvlok piping method.



GRUVLOK FEATURES

RIGIDITY OR FLEXIBILITY

Couplings are available where rigid connections are required. Rigid couplings are clearly marked with an "X" for identification.

Couplings with flexible design allow for pipe expansion and contractions with temperature changes. The need for an expansion joint is minimized or eliminated.

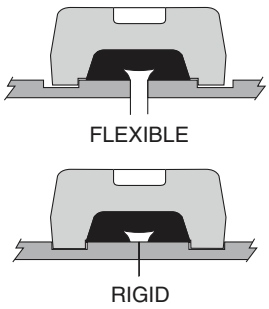

SELF RESTRAINED JOINT

The couplings engage the pipe around the entire circumference and restrain the pipe ends from separation due to pressure and other forces, up to the maximum coupling rated working pressure.

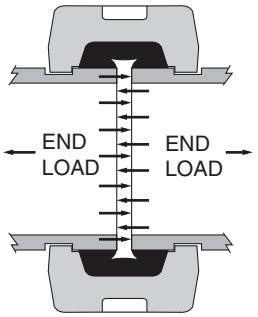

UNION AT EVERY JOINT

Gruvlok couplings can be disassembled easily permitting maintenance and servicing of the piping system. It will facilitate periodic rotation of pipe to distribute internal wear from slurries or other abrasive media.

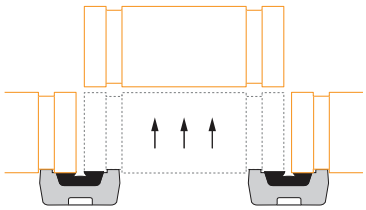

STRESS-FREE SYSTEM

Flexibility designed in the Gruvlok coupling absorbs and eliminates stress from settlement of buried pipe or those induced by seismic tremors.

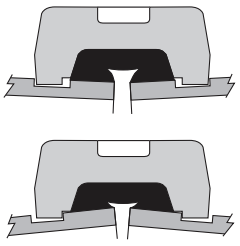

MINIMIZES NOISE & VIBRATION

The resilient elastomeric gasket and pre-designed gap of the Gruvlok coupling help isolate and absorb noise and vibration, this minimizes vibration transmission.

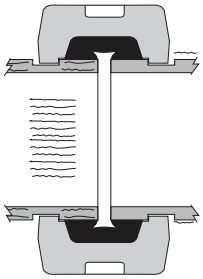

ACCOMMODATES MISALIGNMENT AND JOINT DEFLECTION

The flexibility designed into the Gruvlok coupling will accommodate misalignments caused by imprecise location of pipe opening through walls and floors, will provide pitch for drainage piping systems and facilitate laying pipe on uneven terrain, thus permitting deflection in any direction.

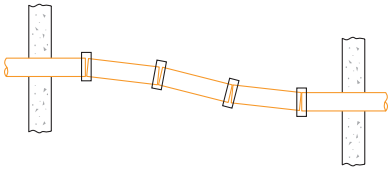

GRUVLOK® COUPLINGS FOR GROOVED-END PIPE

Gruvlok couplings for grooved-end pipe are available in nominal pipe sizes 1" thru 60" and metric sizes. The variety of coupling designs provide a universal means for the connection of pipe, fittings and pipe system components. The wide assortment of Gruvlok couplings and gaskets permit selection of the most suitable combination for a specific application, thus providing the most versatile and economical pipe system installation.

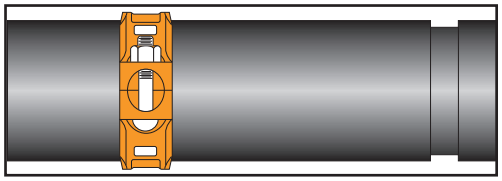

MATERIAL SPECIFICATIONS

BOLTS:
SAE J429, Grade 5, Zinc Electroplated
ISO 898-1, Class 8.8, Zinc Electroplated followed by a Yellow Chromate Dip

HEAVY HEX NUTS:
ASTM A563, Grade A, Zinc Electroplated
ISO 898-2, Class 8.8, Zinc Electroplated followed by a Yellow Chromate Dip

STAINLESS STEEL BOLTS & NUTS:
Stainless steel bolts and nuts are available for the Fig. 7001, 7401, 7401-2, 7001-2, 7004, 7000 and 7400 couplings in standard 304SS, (316SS available as special order)

HOUSING:
Ductile Iron conforming to ASTM A 536, Grade 65-45-12

COATINGS:
Rust inhibiting paint Color: ORANGE (standard)
Hot Dipped Zinc Galvanized (optional)
Other Colors Available (IE: RAL3000 and RAL9000)
For other Coating requirements contact an Anvil Representative.

GASKETS: Materials
Properties as designated in accordance with ASTM D 2000

GRADE "EP" EPDM (Green/Red color code) NSF-61 Certified
-40°F to 250°F (Service Temperature Range)(-40°C to 121°C)
Recommended for water service, diluted acids, alkalies solutions, oil-free air and many other chemical services.
NOT FOR USE IN PETROLEUM APPLICATIONS.

GRADE "E" EPDM (Green color code) NSF-61 Certified
-40°F to 230°F (Service Temperature Range)(-40°C to 110°C)
Recommended for water service, diluted acids, alkalies solutions, oil-free air and many chemical services.
NOT FOR USE IN PETROLEUM APPLICATIONS.

GRADE "T" Nitrile (Orange color code)
-20°F to 180°F (Service Temperature Range)(-29°C to 82°C)
Recommended for petroleum applications. Air with oil vapors and vegetable and mineral oils.
NOT FOR USE IN HOT WATER OR HOT AIR

GRADE "O" Fluoro-Elastomer (Blue color code)
Size Range: 1" - 12" (C style only)
20°F to 300°F (Service Temperature Range)(-29°C to 149°C)
Recommended for high temperature resistance to oxidizing acids, petroleum oils, hydraulic fluids, halogenated hydrocarbons and lubricants

GRADE "L" Silicone (Red color code)
Size Range: 1" - 12" (C style only)
-40°F to 350°F (Service Temperature Range)(-40°C to 177°C)
Recommended for dry, hot air and some high temperature chemical services

GASKET TYPE:
Standard C Style
Flush Gap: 1" - 24"
End Guard: 1" - 12" (Fig. 7004 and 7377)
SlideLOK: 2" - 8"

LUBRICATION:
Standard Gruvlok
Gruvlok Xtreme™ (Do Not use with Grade "L")

WORKING PRESSURE, END LOAD, PIPE END SEPARATION & DEFLECTION FROM CENTER LINE:
Based on standard wall steel pipe with cut or roll grooves in accordance with Gruvlok specifications. Pressure ratings for light wall, stainless steel, aluminum, and ISO pipe available. See technical data section.

COUPLING DATA CHART NOTES

COUPLING DATA CHART NOTES														
Nominal Size	O.D.	Max. Work. Pressure	Max. End Load	Range of Pipe End Separation	Deflection from ℄		Coupling Dimensions			Coupling Bolts		Specified Torque		Approx. Wt. Ea.
					Per Coupling	of Pipe	X	Y	Z	Qty.	Size	Min.	Max.	
In./DN(mm)	*In./mm*	*PSI/bar*	*Lbs./kN*	*In./mm*	*Degrees(°)-Minutes(')*	*In./ft-mm/m*	*In./mm*	*In./mm*	*In./mm*		*In./mm*	*Ft.-Lbs/N-m*		*Lbs./kg*
1	2	3	4	5	6		7			8		9		10

1 Gruvlok Couplings are identified by either the nominal ANSI pipe size in inches or pipe O.D. in millimeters (see column 2).

2 Nominal Outside Diameter of Pipe.

3 Maximum line pressure, including surge, to which a joint can be subjected. Working pressure ratings are based on standard wall steel pipe with standard cut or roll grooves in accordance with Gruvlok specifications. For Performance Data on other than standard wall pipe, refer to Technical data section. **NOTE: For one time field test only, the maximum joint working pressure may be increased to 1.5 times the figure shown unless otherwise noted.**

4 Maximum end load from all interior and/or exterior forces to which the joint can be subjected are based on standard wall steel pipe with standard cut or roll grooves in accordance with Gruvlok specifications.

5 Range of pipe end separation for roll grooved pipe, Double values shown when using cut groove pipe; see page 222 for details.

6 Maximum allowable angular deflection values from centerline when using standard roll grooved pipe; Double values shown when using cut groove pipe; see page 222 for details.

7 "X", "Y", and "Z" are external dimensions for reference purposes only.

8 The quantity of bolts per coupling.

9 Nuts must be tightened alternating and evenly to the specified bolt torque. See individual product installation instructions for additional important information.

10 Approximate weight for a fully assembled coupling with gasket, bolts, and nuts.

FIG. 7401

Rigidlok® Coupling

The Fig. 7401 Rigidlok Coupling is an ideal connector for service and applications that require a rigid connection.

The Fig. 7401 Rigidlok coupling utilizes a technologically advanced housing design that conforms to and grips the pipe.

Coupling installation is fast and easy, remove only one nut and swing the housing over the gasket and into the grooves. The exclusive Guidelok® feature automatically separates the grooved pipe ends and guides the coupling into position as the bolts are tightened. Precisely sized and oriented tines in the housing key section firmly grip the pipe. The combination of these designed in features produce a secure, rigid pipe joint connection.

The Fig. 7401 Rigidlok Coupling is designed for use with roll grooved or cut grooved standard weight and roll grooved lightweight pipe, as well as with grooved-end fittings and valves. The Rigidlok Coupling provides a rigid pipe connection allowing pipe hanging practices per ASME B31 pipe codes.

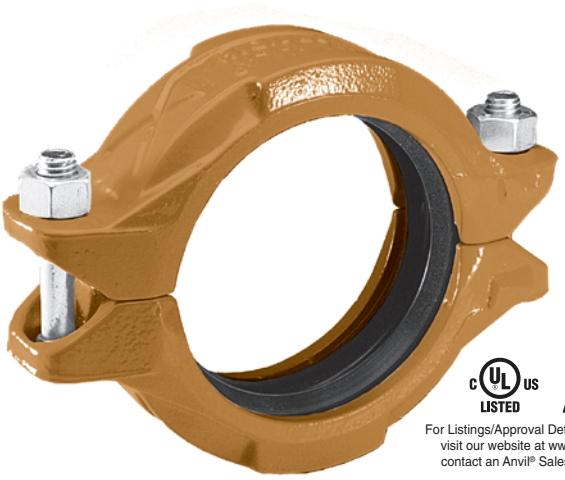

c UL us LISTED FM APPROVED

For Listings/Approval Details and Limitations, visit our website at www.anvilintl.com or contact an Anvil® Sales Representative.

The Fig. 7401 Rigidlok Coupling allows for a maximum working pressure of 750 psi (51.7 bar) when used on standard wall roll or cut grooved pipe.

MATERIAL SPECIFICATIONS

BOLTS:
SAE J429, Grade 5, Zinc Electroplated
ISO 898-1, Class 8.8, Zinc Electroplated followed by a Yellow Chromate Dip

HEAVY HEX NUTS:
ASTM A563, Grade A, Zinc Electroplated
ISO 898-2, Class 8.8, Zinc Electroplated followed by a Yellow Chromate Dip

STAINLESS STEEL BOLTS & NUTS:
304SS bolts and nuts are available as a standard option.
(316SS are available for special order).

HOUSING:
Ductile Iron conforming to ASTM A 536, Grade 65-45-12

COATINGS:
Rust inhibiting paint – Color: ORANGE (standard)
Hot Dipped Zinc Galvanized (optional)
Other Colors Available (IE: RAL3000 and RAL9000)
For other Coating requirements contact an Anvil Representative.

GASKETS: Materials
Properties as designated in accordance with ASTM D 2000

Grade "EP" EPDM (Green and Red color code)
-40°F to 250°F (Service Temperature Range)(-40°C to 121°C)
Recommended for water service, diluted acids, alkalies solutions, oil-free air and many other chemical services.
NOT FOR USE IN PETROLEUM APPLICATIONS.

For hot water applications the use of Gruvlok Extreme Temperature lubricant is recommended. NSF-61 Certified for cold and hot water applications up through 12".

Grade "T" Nitrile (Orange color code)
-20°F to 180°F (Service Temperature Range)(-29°C to 82°C)
Recommended for petroleum applications. air with oil vapors and vegetable and mineral oils.
NOT FOR USE IN HOT WATER OR HOT AIR

Grade "O" Fluoro-Elastomer (Blue color code)
Size Range: 1" - 12" (C style only)
20°F to 300°F (Service Temperature Range)(-29°C to 149°C)
Recommended for high temperature resistance to oxidizing acids, petroleum oils, hydraulic fluids, halogenated hydrocarbons and lubricants.

Grade "L" Silicone (Red color code)
Size Range: 1" - 12" (C style only)
-40°F to 350°F (Service Temperature Range)(-40°C to 177°C)
Recommended for dry, hot air and some high temperature chemical services. Contact an Anvil Representative for availability.

GASKET TYPE:
C Style (1" - 24")
Flush Gap (1" - 24")

LUBRICATION:
Standard
Gruvlok Xtreme™ (Do Not use with Grade "L")

FIG. 7401

Rigidlok® Coupling

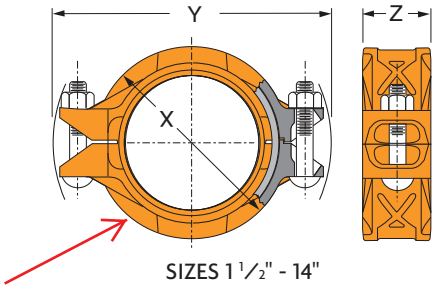

SIZES 1 1/2" - 14"

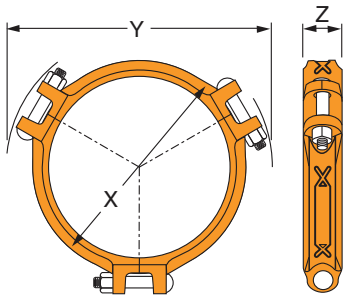

SIZE 16"

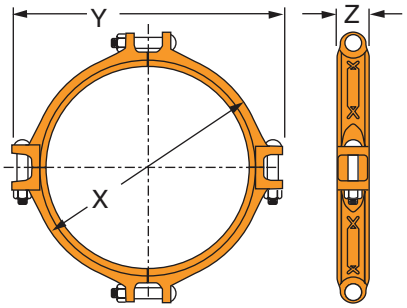

SIZES 18" - 24"

FIGURE 7401 RIGIDLOK COUPLING

Nominal Size	O.D.	Max. Working Pressure†	Max. End Load	Range of Pipe End Separation	Coupling Dimensions			Coupling Bolts*		Specified Torque §		Approx. Wt. Ea.
					X	Y	Z	Qty.	Size	Min.	Max.	
In./DN(mm)	*In./mm*	*PSI/bar*	*Lbs./kN*	*In./mm*	*In./mm*	*In./mm*	*In./mm*		*In./mm*	*Ft.-Lbs/N-M*		*Lbs./kg*
1½	1.900	750	2,126	0-1/32	3	5⅛	1⅞	2	⅜ x 2¼	30	45	1.8
40	*48.3*	*51.7*	*9.46*	*0-0.79*	*76*	*130*	*48*		*M10 x 57*	*40*	*60*	*0.8*
2	2.375	750	3,323	0-1/32	3½	5⅝	1⅞	2	⅜ x 2½	30	45	2.4
50	*60.3*	*51.7*	*14.78*	*0-0.79*	*89*	*143*	*48*		*M10 x 63*	*40*	*60*	*1.1*
2½	2.875	750	4,869	0-1/32	4	6⅛	1⅞	2	⅜ x 2½	30	45	2.9
65	*73.0*	*51.7*	*21.66*	*0-0.79*	*102*	*156*	*48*		*M10 x 63*	*40*	*60*	*1.3*
3 O.D.	*2.996*	*750*	*5,207*	*0-1/32*	*4⅛*	*6⅛*	*1⅞*	*2*	*⅜ x 2½*	*80*	*100*	*3.4*
76.1	76.1	51.7	23.52	0-0.79	105	156	48		M10 x 63	110	150	1.5
3	3.500	750	7,216	0-1/32	4¾	7¼	1⅞	2	½ x 3	80	100	3.6
80	*88.9*	*51.7*	*32.10*	*0-0.79*	*121*	*184*	*48*		*M12 x 76*	*110*	*150*	*1.6*
4	4.500	750	11,928	0-3/32	5⅞	8⅜	2⅛	2	½ x 3	80	100	5.0
100	*114.3*	*51.7*	*53.06*	*0-2.38*	*149*	*213*	*54*		*M12 x 76*	*110*	*150*	*2.3*
5½ O.D.	*5.500*	*750*	*17,819*	0-3/32	*7*	*9¼*	*2⅛*	*2*	*⅝ x 3½*	*100*	*130*	*6.9*
139.7	139.7	51.7	79.26	*0-2.38*	178	248	54		M16 x 85	135	175	3.1
5	5.563	750	18,229	0-3/32	7	10	2⅛	2	⅝ x 3½	100	130	6.9
125	*141.3*	*51.7*	*81.09*	*0-2.38*	*178*	*254*	*54*		*M16 x 85*	*135*	*175*	*3.1*
6½ O.D.	*6.500*	*750*	*24,887*	*0-3/32*	*8*	*11*	*2⅛*	*2*	*⅝ x 3½*	*100*	*130*	*7.6*
165.1	165.1	51.7	110.70	0-2.38	203	279	54		M16 x 85	135	175	3.4
6	6.625	750	25,854	0-3/32	8⅛	11⅛	2⅛	2	⅝ x 3½	100	130	7.9
150	*168.3*	*51.7*	*115.00*	*0-2.38*	*206*	*283*	*54*		*M16 x 85*	*135*	*175*	*3.6*
8	8.625	600	35,056	0-3/32	10½	14⅛	2⅝	2	¾ x 4½	130	180	15.9
200	*219.1*	*41.4*	*155.94*	*0-2.38*	*267*	*359*	*67*		*M20 x 110*	*175*	*245*	*7.2*
10	10.750	500	45,381	0-3/32	12⅞	17½	2⅝	2	1 x 6	200	250	25.6
250	*273.1*	*34.5*	*201.87*	*0-2.38*	*327*	*445*	*67*		*M24 x 150*	*270*	*340*	*11.6*
12	12.750	400	51,070	0-3/32	15	19½	2⅝	2	⅞ x 6	180	220	30.5
300	*323.9*	*27.6*	*227.17*	*0-2.38*	*381*	*495*	*67*		*M22 x 150*	*245*	*300*	*13.8*
14	14.000	300	46,181	0-3/32	16¼	19¾	3	2	⅞ x 5½	180	220	36.1
350	*355.6*	*20.7*	*205.43*	*0-2.38*	*413*	*502*	*76*		*M22 x 140*	*245*	*300*	*16.4*
16	16.000	300	60,319	0-3/32	18⅛	22¼	3	3	⅞ x 5½	180	220	42.0
400	*406.4*	*20.7*	*268.31*	*0-2.38*	*460*	*565*	*76*		*M22 x 140*	*245*	*300*	*19.1*
18	18.000	300	76,341	0-3/32	20½	24⅜	3⅛	4	1 x 4	200	250	51.6
450	*457.2*	*20.7*	*339.58*	*0-2.38*	*521*	*619*	*79*		*M24 x 100*	*270*	*340*	*23.4*
20	20.000	300	94,248	0-3/32	23	26⅞	3⅛	4	1 x 4	200	250	68.3
500	*508.0*	*20.7*	*419.23*	*0-2.38*	*581*	*683*	*79*		*M24 x 100*	*270*	*340*	*31.0*
24	24.000	250	113,097	0-3/32	27⅛	30⅞	3⅛	4	1 x 4	200	250	89.3
600	*609.6*	*17.2*	*503.08*	*0-2.38*	*689*	*784*	*79*		*M24 x 100*	*270*	*340*	*40.5*

NOTE:

Range of Pipe End Seperation values are for roll grooved pipe and may be doubled for cut groove pipe.

†Maximum Working Pressure Rating is for schedule 40 steel pipe. For light wall, stainless steel, aluminum and ISO pipe pressure ratings, please refer to the technical data section.

For additional details see "Coupling Data Chart Notes" on page 17.
* Available in ANSI or metric bolt sizes only as indicated.
§ – For additional Bolt Torque information, see page 222.
See Installation & Assembly directions on page 183.
Not for use in copper systems.

FIG. 7012
Gruvlok Flanges

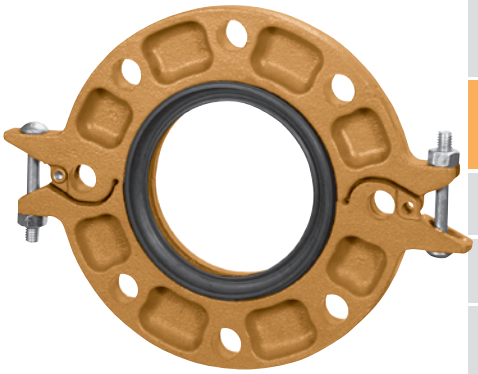

Sizes 2" - 12"

The Gruvlok® Fig. 7012 Flange allows direct connection of Class 125 or Class 150 flanged components to a grooved piping system. The two interlocking halves of the 2" thru 12" sizes of the Gruvlok Flange are hinged for ease of handling, and are drawn together by a latch bolt which eases assembly on the pipe. Precision machined bolt holes, key and mating surfaces assure concentricity and flatness to provide exact fit-up with flanged, lug, and wafer styles of pipe system equipment. A specially designed gasket provides a leak-tight seal on both the pipe and the mating flange face.

The 14" thru 24" sizes of the Gruvlok Fig. 7012 Flange are cast in four segments. A sleek profile gasket design allows quick and easy assembly of the Gruvlok Flange onto the pipe.

All Gruvlok Fig. 7012 Flanges have designed-in anti-rotation tines which bite into and grip the sides of the pipe grooves to provide a secure, rigid connection.

The Gruvlok Fig. 7012 Flange requires the use of a steel adapter insert when used against rubber faced surfaces, wafer/lug design valves and serrated or irregular sealing surfaces. In copper systems a phenolic adapter insert is required, in place of the steel adapter insert. (See Installation and Assembly Instructions Section or contact your Anvil Rep. for details.)

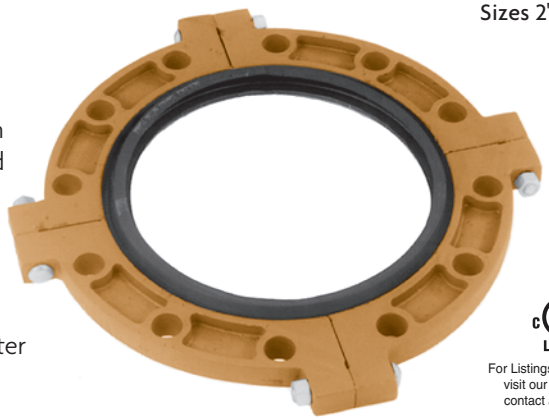

Sizes 14" - 24"

c UL us LISTED FM APPROVED

For Listings/Approval Details and Limitations, visit our website at www.anvilintl.com or contact an Anvil® Sales Representative.

MATERIAL SPECIFICATIONS

LATCH BOLT (2" - 12"), SEGMENT BOLT (14" - 24"):
SAE J429, Grade 5, Zinc Electroplated
ISO 898-1, Class 8.8, Zinc Electroplated followed by a Yellow Chromate Dip

LATCH NUT (2" - 12"), SEGMENT NUT (14" - 24"):
ASTM A563, Grade A, Zinc Electroplated
ISO 898-2, Class 8.8, Zinc Electroplated followed by a Yellow Chromate Dip

HOUSING:
Ductile Iron conforming to ASTM A 536, Grade 65-45-12.

COATINGS:
Rust inhibiting paint – Color: ORANGE (standard), Red (optional)
Hot Dipped Zinc Galvanized (optional)
Other Colors Available (IE: RAL3000 and RAL9000)
For other Coating requirements contact an Anvil Representative.

GASKETS: Materials
Properties as designated in accordance with ASTM D 2000

Grade "E" EPDM (Green color code)
-40°F to 230°F (Service Temperature Range)(-40°C to 110°C)
Recommended for water service, diluted acids, alkalies solutions, oil-free air and many other chemical services.
NOT FOR USE IN PETROLEUM APPLICATIONS.

Grade "T" Nitrile (Orange color code)
-20°F to 180°F (Service Temperature Range)(-29°C to 82°C)
Recommended for petroleum applications. air with oil vapors and vegetable and mineral oils.
NOT FOR USE IN HOT WATER.

LUBRICATION:
Standard Gruvlok
Gruvlok Xtreme™ (Do Not use with Grade "L")

FIG. 7012

Gruvlok Flanges

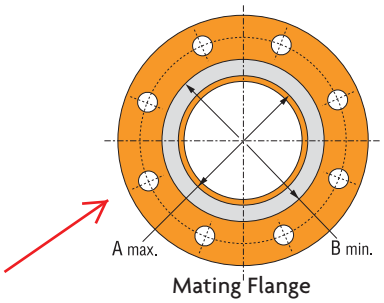

Mating Flange

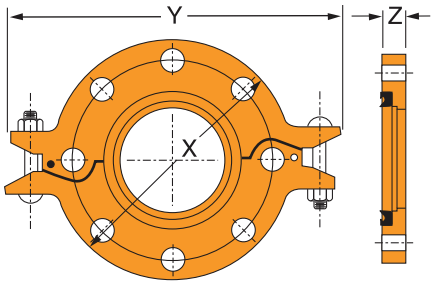

2"-12" sizes

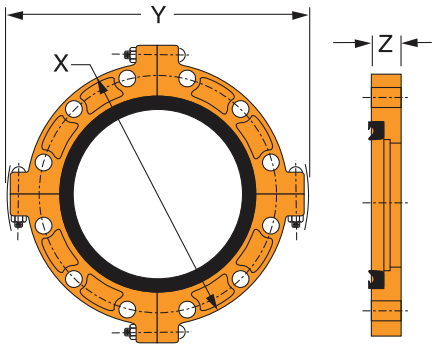

14"-24" sizes

GRUVLOK FIGURE 7012 FLANGE: ANSI CLASS 150 OR ISO PN10 OR PN16 BOLT PATTERNS

Nominal Size	O.D.	Max. Working Pressure†	Max. End Load▼	Latch Bolt			Dimensions			Sealing Surface		Mating Flange Bolts						Approx. Wt. Ea.
				Latch Bolt Size*	Specified Torque §		X	Y	Z	A Max.	B Min.	Mating Flange Bolts		Bolt Circle Diameter	Bolt Hole Diameter	Specified Torque §		
					Min.	Max.						Qty. ANSI	Size (ANSI)			Min.	Max.	
In./DN(mm)	*In./mm*	*PSI/bar*	*Lbs./kN*	*In./mm*	*Ft.-Lbs/N-m*		*In./mm*	*In./mm*	*In./mm*	*In./mm*	*In./mm*	*PN10 (16)*	*in. (ISO) mm*	*In./mm*	*In./mm*	*Ft.-Lbs/N-m*		*Lbs./Kg*
2	2.375	300	1,329	⅜ x 2¾	30	45	6¼	8⅜	¾	2⅜	3⁷⁄₁₆	4	⅝ x 2¾	4¾	¾	110	140	4.2
50	*60.3*	*20.7*	*5.91*	*M10 x 70*	*40*	*60*	*159*	*213*	*19*	*60*	*87*	*4*	*M16 x 70*	*120.7*	*19.1*	*149*	*190*	*1.9*
2½	2.875	300	1,948	⅜ x 2¾	30	45	7	9½	¾	2⅞	4	4	⅝ x 2¾	5½	¾	110	140	4.6
65	*73.0*	*20.7*	*8.66*	*M10 x 70*	*40*	*60*	*178*	*241*	*19*	*73*	*102*	*-*	*M16 x 70*	*139.7*	*19.1*	*149*	*190*	*2.1*
3 O.D.	*2.996*	*300*	*2,115*	*-*	*30*	*45*	*7¼*	*9¾*	*¾*	*3*	*4⅛*	*-*	*-*	*-*	*-*	*110*	*140*	*4.8*
76.1	76.1	20.7	9.41	M10 x 70	40	60	184	248	19	76	105	4	M16 x 70	-	-	149	190	2.2
3	3.500	300	2,886	⅜ x 2¾	30	45	7⅞	10½	¾	3½	4⁹⁄₁₆	4	⅝ x 2¾	6	¾	110	140	6.0
88.9	*88.9*	*20.7*	*12.84*	*M10 x 70*	*40*	*60*	*200*	*267*	*19*	*89*	*116*	*8*	*M16 x 70*	*152.4*	*19.1*	*149*	*190*	*2.7*
4	4.500	300	4,771	⅜ x 2¾	30	45	9	11½	¾	4½	5⁹⁄₁₆	8	⅝ x 2¾	7½	¾	110	140	6.3
100	*114.3*	*20.7*	*21.22*	*M10 x 70*	*40*	*60*	*229*	*292*	*19*	*114*	*141*	*8*	*M16 x 70*	*190.5*	*19.1*	*149*	*190*	*2.9*
5½ O.D.	*5.500*	*300*	*7,127*	*-*	*30*	*45*	*9⅞*	*12⅞*	*⅞*	*5⁹⁄₁₆*	*6¾*	*-*	*-*	*-*	*-*	*220*	*250*	*15.6*
139.7	139.7	20.7	31.70	M10 x 70	40	60	251	327	22	141	171	8	M16 x 75	-	-	298	339	7.1
5	5.563	300	7,292	⅜ x 2¾	30	45	10	12½	⅞	5⁹⁄₁₆	6¾	8	¾ x 2⅞	8½	⅞	220	250	8.8
125	*141.3*	*20.7*	*32.44*	*M10 x 70*	*40*	*60*	*254*	*318*	*22*	*141*	*171*	*-*	*-*	*215.9*	*22.2*	*298*	*339*	*4.0*
6½ O.D.	*6.500*	*300*	*9,955*	*-*	*30*	*45*	*11¼*	*14*	*⅞*	*6⅝*	*7¹³⁄₁₆*	*-*	*-*	*-*	*-*	*220*	*250*	*9.7*
165.1	165.1	20.7	44.28	M10 x 70	40	60	286	356	22	168	198	8	M20 x 80	-	-	298	339	4.4
6	6.625	300	10,341	⅜ x 2¾	30	45	11	14	⅞	6⅝	7¹³⁄₁₆	8	¾ x 3⅛	9½	⅞	220	250	9.6
150	*168.3*	*20.7*	*46.00*	*M10 x 70*	*40*	*60*	*279*	*356*	*22*	*168*	*198*	*8*	*M20 x 80*	*241.1*	*22.2*	*298*	*339*	*4.4*
8	8.625	300	17,528	⅜ x 2¾	30	45	13½	16½	1	8⅝	10	8	¾ x 3¼	11¾	⅞	220	250	15.6
200	*219.1*	*20.7*	*77.97*	*M10 x 70*	*40*	*60*	*343*	*419*	*25*	*219*	*254*	*8 (12)*	*M20 x 80*	*298.5*	*22.2*	*298*	*339*	*7.1*
10	10.750	300	27,229	⅜ x 2¾	30	45	16	19	1	10¾	12⅛	12	⅞ x 3½	14¼	1	320	400	18.2
250	*273.1*	*20.7*	*121.12*	*M10 x 70*	*40*	*60*	*406*	*483*	*25*	*273*	*308*	*12*	*M20 x 90*	*362.0*	*25.4*	*439*	*542*	*8.3*
12	12.750	300	38,303	⅜ x 2¾	30	45	19	21¾	1¼	12¾	14⅛	12	⅞ x 3¾	17	1	320	400	29.9
300	*323.9*	*20.7*	*170.38*	*M10 x 70*	*40*	*60*	*483*	*552*	*32*	*324*	*359*	*12*	*-*	*431.8*	*25.4*	*439*	*542*	*13.6*
14	14.000	300	46,181	⅝ x 4¼	100	130	21	24	1½	14	16	12	1 x 4¼	18¾	1⅛	360	520	52.5
350	*355.6*	*20.7*	*205.43*	*-*	*136*	*176*	*533*	*610*	*38*	*356*	*406*	*-*	*-*	*476.3*	*28.6*	*488*	*705*	*23.8*
16	16.000	300	60,319	⅝ x 4¼	100	130	23½	26½	1½	16	18	16	1 x 4¼	21¼	1⅛	360	520	67.0
400	*406.4*	*20.7*	*268.31*	*-*	*136*	*176*	*597*	*673*	*38*	*406*	*457*	*-*	*-*	*539.8*	*28.6*	*488*	*705*	*30.4*
18	18.000	300	76,341	¾ x 5	130	180	25	29	1⅝	18	20	16	1⅛ x 4¾	22¾	1¼	450	725	82.5
450	*457.2*	*20.7*	*339.58*	*-*	*176*	*244*	*635*	*737*	*41*	*457*	*508*	*-*	*–*	*577.9*	*31.8*	*610*	*983*	*37.4*
20	20.000	300	94,248	¾ x 5	130	180	27½	31½	1¾	20	22	20	1⅛ x 4¾	25	1¼	450	725	106.5
500	*508.0*	*20.7*	*419.23*	*-*	*176*	*244*	*699*	*800*	*44*	*508*	*559*	*-*	*–*	*635.0*	*31.8*	*610*	*983*	*48.3*
24	24.000	250	113,097	⅞ x 5½	180	220	32	36½	1⅞	24	26	20	1¼ x 5½	29½	1⅜	620	1,000	138.5
600	*609.6*	*17.2*	*503.08*	*-*	*244*	*298*	*813*	*927*	*48*	*610*	*660*	*-*	*-*	*749.3*	*34.92*	*841*	*1,356*	*62.8*

NOTES:

†Maximum Working Pressure Rating is for schedule 40 steel pipe. For light wall, stainless steel, aluminum and ISO pipe pressure ratings, please refer to the technical data section.

The Gruvlok Flange bolt hole pattern conforms to ANSI Class 150 and Class 125 flanges.

To avoid interference issues, flanges cannot be assembled directly to Series 7700 butterfly valve. Flange can be assembled to one side of series 7500 and 7600 valve only.

Mating flange bolts must be at least Intermediate Strength Bolting per ASME B16.5. Bolts with material properties equal or greater than SAE J429 Grade 5 are acceptable.

For additional details see "Coupling Data Chart Notes" on page 17.
+ PN 16 uses M24 x 90 (PN) Dimensions for bolt circle PN 10 & 16 Flange.
* Available in ANSI or metric bolt sizes only as indicated.
▼ Based on use with standard wall pipe.
§ – For additional Bolt Torque information, see page 222.
See Installation & Assembly directions on page 198-200.

FIG. 7012
Gruvlok Flanges

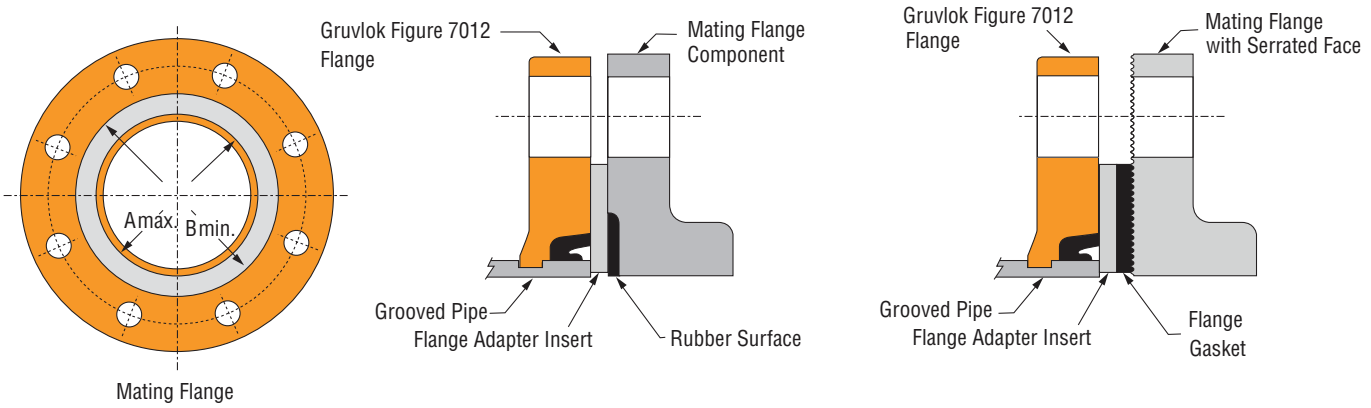

A. The sealing surfaces A Max. to B Min. of the mating flange must be free from gouges, undulations and deformities of any type to ensure proper sealing of the gasket.

B. Gruvlok Flanges are to be assembled on butterfly valves so as not to interfere with actuator or handle operation.

C. Do not use Gruvlok Flanges within 90 degrees of one another on standard fittings because the outside dimensions may cause interference.

D. Gruvlok Flanges should not be used as anchor points for tierods across non-restrained joints.

E. Fig. 7012 Gruvlok Flange sealing gaskets require a hard flat surface for adequate sealing. The use of a Gruvlok Flange Adapter Insert is required for applications against rubber faced valves or other equipment. The Gruvlok Flange Adapter Insert is installed between the Gruvlok Flange sealing gasket and the mating flange or surface to provide a good sealing surface area.

F. Gruvlok Flanges are not recommended for use against formed rubber flanges.

G. Contact an Anvil Representative for Di-Electric Flange connections.

Applications which require a Gruvlok Flange Adapter Insert (page 49):

1. When mating to a wafer valve (lug valve), if the valve is rubber faced in the area designated by the sealing surface dimensions (A Max. to B Min.), place the Gruvlok Flange Adapter Insert between the valve and the Gruvlok flange.
2. When mating to a rubber-faced metal flange, the Gruvlok Flange Adapter Insert is placed between the Gruvlok Flange and the rubber-faced flange.
3. When mating to a serrated flange surface, a standard full-faced flange gasket is installed against the serrated flange face and the Gruvlok Flange Adapter Insert is placed between the Gruvlok Flange and the standard Flange gasket.
4. When mating to valves or other component equipment where the flange face has an insert, use procedure described in note 3.

FIG. 7045

Clamp-T, FPT Branch

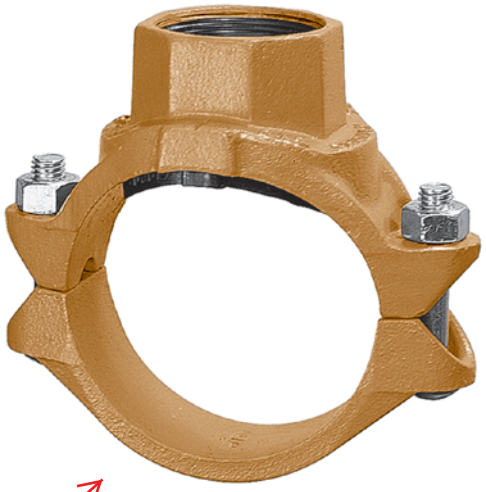

c UL us LISTED FM APPROVED

For Listings/Approval Details and Limitations, visit our website at www.anvilintl.com or contact an Anvil® Sales Representative.

The Gruvlok Clamp-T provides a quick and easy outlet at any location along the pipe. A hole drilled or cut in the pipe to receive the locating collar of the Clamp-T is all that is required. The full, smooth outlet area provides for optimum flow characteristics.

The Clamp-T housing is specially engineered to conform to the pipe O.D. and the Clamp-T gasket providing a leak tight reliable seal in both positive pressure and vacuum conditions. The maximum working pressure for all sizes is 500 PSI (34.5 bar) when assembled on standard wall steel pipe.

The Gruvlok Clamp-T provides for a branch or cross connection in light wall or standard wall steel pipe.

The Fig. 7045 Clamp-T female pipe thread branch is available with NPT or ISO 7/1 connection and the Fig. 7046 Clamp-T has grooved-end branch connection.

Clamp-T cross connections are available in various sizes allowing greater versatility in piping design.

NOTE: Variable End Configurations are Possible — Thd x Thd and Gr. x Thd.
Sizes — 2" x 1/2" through 8" x 4"

CLAMP-T FLOW DATA (FRICTIONAL RESISTANCE)

Branch Size Inches	Fig. 7045 Threaded Branch	
	C.V. Value	Equiv. Pipe Length Feet
DN/mm		*Meters*
1/2 *15*	22 -	1.0 *0.3*
3/4 *20*	25 -	2.0 *0.6*
1 *25*	44 -	2.0 *0.6*
1 1/4 *32*	76 -	2.5 *0.8*
1 1/2 *40*	89 -	4.0 *1.2*
2 *50*	164 -	3.5 *1.1*
2 1/2 *65*	152 -	12.5 *3.8*
3 *80*	318 -	8.5 *2.6*
4 *100*	536 -	8.0 *2.4*

MATERIAL SPECIFICATIONS

BOLTS:
SAE J429, Grade 5, Zinc Electroplated
ISO 898-1, Class 8.8, Zinc Electroplated followed by a Yellow Chromate Dip

HEAVY HEX NUTS:
ASTM A563, Grade A, Zinc Electroplated
ISO 898-2, Class 8.8, Zinc Electroplated followed by a Yellow Chromate Dip

U-BOLT:
Cold drawn steel and zinc plated.

HOUSING:
Ductile Iron conforming to ASTM A 536, Grade 65-45-12

COATINGS:
Rust inhibiting paint – Color: ORANGE (standard)
Hot Dipped Zinc Galvanized (optional)
Other Colors Available (IE: RAL3000 and RAL9000)
For other Coating requirements Contact an Anvil Representative for more information.

GASKETS: Materials
Properties as designated in accordance with ASTM D 2000

Grade "E" EPDM (Green color code)
-40°F to 230°F (Service Temperature Range)(-40°C to 110°C)
Recommended for water service, diluted acids, alkalies solutions, oil-free air and many other chemical services.
NOT FOR USE IN PETROLEUM APPLICATIONS.

Grade "T" Nitrile (Orange color code)
-20°F to 180°F (Service Temperature Range)(-29°C to 82°C)
Recommended for petroleum applications. air with oil vapors and vegetable and mineral oils.
NOT FOR USE IN HOT WATER OR HOT AIR.

LUBRICATION:
Standard Gruvlok
Gruvlok Xtreme™ (Do Not use with Grade "L")

FIG. 7045

Clamp-T, FPT Branch

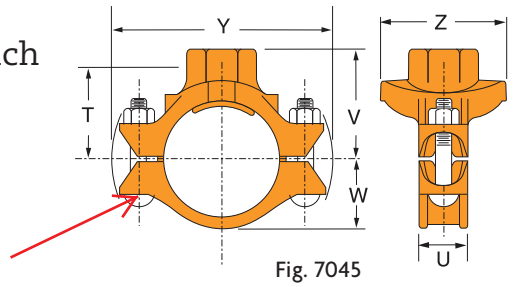

Fig. 7045

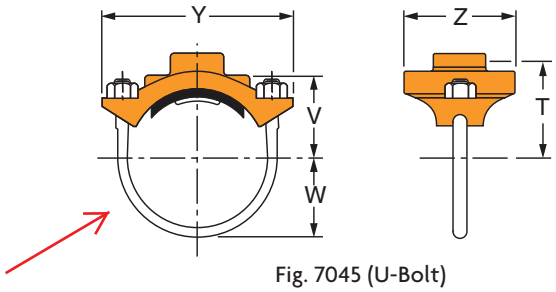

Fig. 7045 (U-Bolt)

FIGURE 7045-FPT BRANCH (TABLE CONTINUES TO NEXT PAGE)

Nominal Size	O.D.	Hole Dimensions		▼ Max. Working Pressure	Clamp-T Dimensions						Bolt Size	Specified Torque §		Approx. Wt. Each
		Min. Diameter	Max. Diameter		T	U	V Threaded	W	Y	Z		Min.	Max.	
In./DN(mm)	*In./mm*	*In./mm*	*In./mm*	*PSI/bar*	*In./mm*	*In./mm*	*In./mm*	*In./mm*	*In./mm*	*In./mm*	*In./mm*	*Ft.-Lbs/N-m*		*Lbs./Kg*
2 x ½ *50 x 15*	2.375 x 0.840 *60.3 x 21.3*	1½ *38*	1⅝ *41*	500 *34.5*	2 3/16 *56*	9/16 *14*	2⅝ *67*	½ *12*	5½ *140*	3 *76*	½ U-Bolt -	30	40	2.3 *1.0*
2 x ¾ *50 x 20*	2.375 x 1.050 *60.3 x 26.7*	1½ *38*	1⅝ *41*	500 *34.5*	2 1/16 *52*	9/16 *14*	2⅝ *67*	1½ *38*	5½ *140*	3 *76*	½ U-Bolt -	30	40	2.3 *1.0*
2 x 1 *50 x 25*	2.375 x 1.315 *60.3 x 33.7*	1½ *38*	1⅝ *41*	500 *34.5*	1 15/16 *51*	9/16 *14*	2⅝ *67*	1½ *38*	5½ *140*	3 *76*	½ U-Bolt -	30	40	2.6 *1.2*
2 x 1¼ *50 x 32*	2.375 x 1.660 *60.3 x 42.4*	2 *51*	2⅛ *54*	500 *34.5*	2 3/16 *55*	9/16 *14*	2⅞ *73*	1½ *38*	5½ *140*	3½ *89*	½ U-Bolt -	30	40	2.7 *1.2*
2 x 1½ *50 x 40*	2.375 x 1.900 *60.3 x 48.3*	2 *51*	2⅛ *54*	500 *34.5*	2 3/16 *55*	9/16 *14*	2⅞ *73*	1½ *38*	7 *178*	3½ *89*	½ U-Bolt -	30	40	2.5 *1.1*
2½ x ½ *65 x 15*	2.875 x 0.840 *73.0 x 21.3*	1½ *38*	1⅝ *41*	500 *34.5*	2 7/16 *62*	9/16 *14*	2⅞ *73*	1¾ *44*	5½ *140*	3 *76*	½ U-Bolt -	30	40	3.0 *1.4*
2½ x ¾ *65 x 20*	2.875 x 1.050 *73.0 x 26.7*	1½ *38*	1⅝ *41*	500 *34.5*	2 5/16 *59*	9/16 *14*	2⅞ *73*	1¾ *44*	5½ *140*	3 *76*	½ U-Bolt -	30	40	2.9 *1.3*
2½ x 1 *65 x 25*	2.875 x 1.315 *73.0 x 33.7*	1½ *38*	1⅝ *41*	500 *34.5*	2 3/16 *55*	9/16 *14*	2⅞ *73*	1¾ *44*	6⅛ *156*	3 *76*	½ U-Bolt -	30	40	2.9 *1.3*
2½ x 1¼ *65 x 32*	2.875 x 1.660 *73.0 x 42.4*	2 *51*	2⅛ *54*	500 *34.5*	2 7/16 *62*	9/16 *14*	3⅛ *79*	1¾ *44*	6⅛ *156*	3⅜ *86*	½ U-Bolt -	30	40	3.4 *1.5*
2½ x 1½ *65 x 40*	2.875 x 1.900 *73.0 x 48.3*	2 *51*	2⅛ *54*	500 *34.5*	2 7/16 *62*	9/16 *14*	3⅛ *79*	1¾ *44*	6⅛ *156*	3⅜ *86*	½ U-Bolt -	30	40	3.4 *1.5*
3 x ½ *80 x 15*	3.500 x 0.840 *88.9 x 21.3*	1½ *38*	1⅝ *41*	500 *34.5*	2 9/16 *65*	9/16 *14*	3 *76*	2⅛ *54*	7 *178*	3¾ *95*	½ U-Bolt -	30	40	2.8 *1.2*
3 x ¾ *80 x 20*	3.500 x 1.050 *88.9 x 26.7*	1½ *38*	1⅝ *41*	500 *34.5*	2 7/16 *62*	9/16 *14*	3 *76*	2⅛ *54*	7 *178*	3¾ *95*	½ U-Bolt -	30	40	2.7 *1.2*
3 x 1 *80 x 25*	3.500 x 1.315 *88.9 x 33.7*	1½ *38*	1⅝ *41*	500 *34.5*	2 5/16 *59*	9/16 *14*	3 *76*	2⅛ *54*	7 *178*	3¾ *95*	½ U-Bolt -	30	40	2.7 *1.2*
3 x 1¼ *80 x 32*	3.500 x 1.660 *88.9 x 42.4*	2 *51*	2⅛ *54*	500 *34.5*	2 11/16 *68*	1½ *38*	3⅜ *86*	2⅛ *54*	6⅞ *175*	3¾ *95*	½x 2¾ -	80	100	3.4 *1.5*
3 x 1½ *80 x 40*	3.500 x 1.900 *88.9 x 48.3*	2 *51*	2⅛ *54*	500 *34.5*	2 11/16 *68*	1½ *38*	3⅜ *86*	2⅛ *54*	6⅞ *175*	3¾ *95*	½ x 2¾ -	80	100	4.4 *2.0*
3 x 2 *80 x 50*	3.500 x 2.375 *88.9 x 60.3*	2½ *64*	2⅝ *67*	500 *34.5*	2 11/16 *68*	1½ *38*	3⅜ *86*	2⅛ *54*	6⅞ *175*	4⅛ *105*	½ x 2¾ -	80	100	4.6 *2.1*
4 x ½ *100 x 15*	4.500 x 0.840 *114.3 x 21.3*	1½ *38*	1⅝ *41*	500 *34.5*	3 1/16 *76*	9/16 *14*	3½ *89*	2⅝ *67*	7¾ *197*	3¾ *95*	½ U-Bolt -	30	40	2.9 *1.3*
4 x ¾ *100 x 20*	4.500 x 1.050 *114.3 x 26.7*	1½ *38*	1⅝ *41*	500 *34.5*	3 1/16 *78*	9/16 *14*	3½ *89*	2⅝ *67*	7¾ *197*	3¾ *95*	½ U-Bolt -	30	40	2.8 *1.3*
4 x 1 *100 x 25*	4.500 x 1.315 *114.3 x 33.7*	1½ *38*	1⅝ *41*	500 *34.5*	2 13/16 *73*	9/16 *14*	3½ *89*	2⅝ *67*	7¾ *197*	3¾ *95*	½ U-Bolt -	30	40	2.7 *1.2*
4 x 1¼ *100 x 32*	4.500 x 1.660 *114.3 x 42.4*	2 *51*	2⅛ *54*	500 *34.5*	3 3/16 *81*	1⅞ *48*	3⅞ *98*	2⅝ *67*	7½ *191*	3¾ *95*	½ x 2¾ -	80	100	4.5 *2.0*
4 x 1½ *100 x 40*	4.500 x 1.900 *114.3 x 48.3*	2 *51*	2⅛ *54*	500 *34.5*	3 3/16 *81*	1⅞ *48*	3⅞ *98*	2⅝ *67*	7½ *191*	3¾ *95*	½ x 2¾ -	80	100	4.6 *2.1*
4 x 2 *100 x 50*	4.500 x 2.375 *114.3 x 60.3*	2½ *64*	2⅝ *67*	500 *34.5*	3 5/16 *84*	1⅞ *48*	4 *102*	2⅝ *67*	7½ *191*	4⅛ *105*	½ x 2¾ -	80	100	7.7 *3.5*
4 x 2½ *100 x 65*	4.500 x 2.875 *114.3 x 73.0*	2¾ *70*	2⅞ *73*	500 *34.5*	3 11/16 *78*	1⅞ *48*	4 *102*	2⅝ *67*	7½ *191*	4⅜ *111*	½ x 2¾ -	80	100	5.2 *2.4*
4 x 3 O.D. 100 x 80	*4.500 x 2.996* 114.3 x 76.1	*2¾* 70	*2⅞* 73	*500* 34.5	*3* 76	*1⅞* 48	*4* 102	*2⅝* 67	*7½* 191	*4⅜* 111	*½ x 2¾* -	*80*	*100*	*5.2* 2.4
4 x 3 *100 x 80*	4.500 x 3.500 *114.3 x 88.9*	3½ *89*	3⅝ *92*	500 *34.5*	3¼ *83*	1⅞ *48*	4¼ *108*	2⅝ *67*	7½ *191*	5¼ *133*	½ x 3½ -	80	100	6.5 *2.9*

NOTE:
2½", 5" and 6" Nom. Run pipe size Clamp-T may be used on 3" O.D., 5½" O.D. and 6½" O.D. pipe.

(Additional larger sizes on next page.)

▼ Based on use with standard wall pipe.
§ – For additional Bolt Torque information, see page 222.
See Installation & Assembly directions on page 202.
Not for use with copper systems.

FIG. 7046

Clamp-T, Grooved Branch

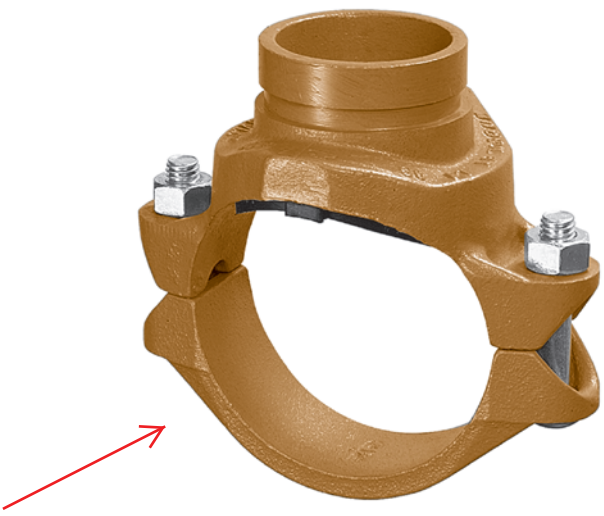

c UL us LISTED FM APPROVED

For Listings/Approval Details and Limitations, visit our website at www.anvilintl.com or contact an Anvil® Sales Representative.

The Gruvlok Clamp-T provides a quick and easy outlet at any location along the pipe. A hole drilled or cut in the pipe to receive the locating collar of the Clamp-T is all that is required. The full, smooth outlet area provides for optimum flow characteristics.

The Clamp-T housing is specially engineered to conform to the pipe O.D. and the Clamp-T gasket providing a leak-tight reliable seal in both positive pressure and vacuum conditions. The maximum working pressure for all sizes is 500 PSI (34.5 bar) when assembled on standard wall steel pipe.

The Gruvlok Clamp-T provides for a branch or cross connection in light wall or standard wall steel pipe.

Clamp-T cross connections are available in most sizes allowing greater versatility in piping design.

CLAMP-T FLOW DATA (FRICTIONAL RESISTANCE)

Branch Size	Fig. 7046 Grooved Branch	
	C.V. Value	Equiv. Pipe Length
In./DN/mm		*Ft./Meters*
1¼ *32*	5.4	5.0 *1.5*
1½ *40*	95	3.5 *1.1*
2 *50*	148	4.5 *1.4*
2½ *65*	205	7.0 *2.1*
3 *80*	294	9.5 *2.9*
4 *100*	571	7.0 *2.1*

MATERIAL SPECIFICATIONS

BOLTS:
SAE J429, Grade 5, Zinc Electroplated
ISO 898-1, Class 8.8, Zinc Electroplated followed by a Yellow Chromate Dip

HEAVY HEX NUTS:
ASTM A563, Grade A, Zinc Electroplated
ISO 898-2, Class 8.8, Zinc Electroplated followed by a Yellow Chromate Dip

U-BOLT:
Cold drawn steel and zinc plated.

HOUSING:
Ductile Iron conforming to ASTM A 536, Grade 65-45-12

COATINGS:
Rust inhibiting paint – Color: ORANGE (standard)
Hot Dipped Zinc Galvanized (optional)
Other Colors Available (IE: RAL3000 and RAL9000)
For other Coating requirements contact an Anvil Representative for more information.

GASKETS: Materials
Properties as designated in accordance with ASTM D 2000

Grade "E" EPDM (Green color code)
-40°F to 230°F (Service Temperature Range)(-40°C to 110°C)
Recommended for water service, diluted acids, alkalies solutions, oil-free air and many other chemical services.
NOT FOR USE IN PETROLEUM APPLICATIONS.

Grade "T" Nitrile (Orange color code)
-20°F to 180°F (Service Temperature Range)(-29°C to 82°C)
Recommended for petroleum applications. air with oil vapors and vegetable and mineral oils.
NOT FOR USE IN HOT WATER OR HOT AIR.

LUBRICATION:
Standard Gruvlok
Gruvlok Xtreme™ (Do Not use with Grade "L")

FIG. 7046

Clamp-T, Grooved Branch

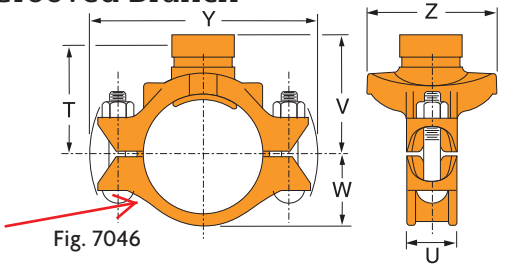

Fig. 7046

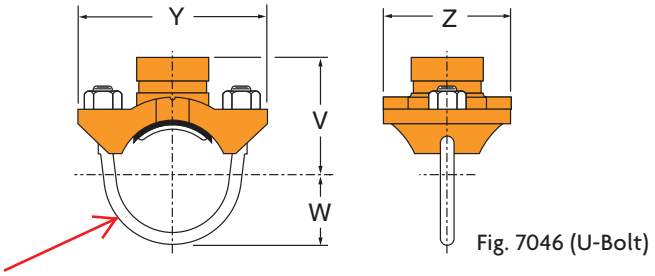

Fig. 7046 (U-Bolt)

FIGURE 7046-GR BRANCH

Nominal Size	O.D.	Hole Dimensions		▼ Max. Working Pressure	Clamp-T Dimensions					Bolt Size	Specified Torque §		Approx. Wt. Each
		Min. Diameter	Max. Diameter		U	V Grooved	W	Y	Z		Min.	Max.	
In./DN(mm)	*In./mm*	*In./mm*	*In./mm*	*PSI/bar*	*In./mm*	*In./mm*	*In./mm*	*In./mm*	*In./mm*	*In./mm*	*Ft.-Lbs/N-m*		*Lbs./Kg*
2½ x 1¼•	2.875 x 1.660	2	2⅛	500	9⁄16	3⅛	1¾	6⅛	3½	½ U-Bolt	30	40	3.4
65 x 32	*73.0 x 42.4*	*51*	*54*	*34.5*	*14*	*79*	*44*	*156*	*89*	-			*1.5*
2½ x 1½	2.875 x 1.900	2	2⅛	500	9⁄16	3⅛	1¾	6⅛	3½	½ U-Bolt	30	40	3.4
65 x 40	*73.0 x 48.3*	*51*	*54*	*34.5*	*14*	*79*	*44*	*156*	*89*	-			*1.5*
3 x 1¼	3.500 x 1.660	2	2⅛	500	1½	3½	2⅛	6⅞	3¾	½ x 2¾	80	100	3.4
80 x 32	*88.9 x 42.4*	*51*	*54*	*34.5*	*38*	*89*	*54*	*175*	*95*	-			*1.5*
3 x 1½	3.500 x 1.900	2	2⅛	500	1½	3½	2⅛	6⅞	3¾	½ x 2¾	80	100	4.4
80 x 40	*88.9 x 48.3*	*51*	*54*	*34.5*	*38*	*89*	*54*	*175*	*95*	-			*2.0*
3 x 2	3.500 x 2.375	2½	2⅝	500	1½	3½	2⅛	6⅞	4⅛	½ x 2¾	80	100	4.6
80 x 50	*88.9 x 60.3*	*64*	*67*	*34.5*	*38*	*89*	*54*	*175*	*105*	-			*2.1*
4 x 1¼	4.500 x 1.660	2	2⅛	500	1⅞	4	2⅝	7½	3¾	½ x 2¾	80	100	4.2
100 x 32	*114.3 x 42.4*	*51*	*54*	*34.5*	*48*	*102*	*67*	*191*	*95*	-			*1.9*
4 x 1½	4.500 x 1.900	2	2⅛	500	1⅞	4	2⅝	7½	3¾	½ x 2¾	80	100	4.3
100 x 40	*114.3 x 48.3*	*51*	*54*	*34.5*	*48*	*102*	*67*	*191*	*95*	-			*2.0*
4 x 2	4.500 x 2.375	2½	2⅝	500	1⅞	4	2⅝	7½	4⅛	½ x 2¾	80	100	4.6
100 x 50	*114.3 x 60.3*	*64*	*67*	*34.5*	*48*	*102*	*67*	*191*	*105*	-			*2.1*
4 x 2½	4.500 x 2.875	2¾	2⅞	500	1⅞	4	2⅝	7½	4⅜	½ x 2¾	80	100	5.0
100 x 65	*114.3 x 73.0*	*70*	*73*	*34.5*	*48*	*102*	*67*	*191*	*111*	-			*2.3*
4 x 3 O.D.	*4.500 x 2.996*	*2¾*	*2⅞*	*500*	*1⅞*	*4*	*2⅝*	*7½*	*4⅜*	*½ x 2¾*	*80*	*100*	*5.0*
100 x 80	114.3 x 76.1	70	73	34.5	48	102	67	191	111	-			2.3
4 x 3	4.500 x 3.500	3½	3⅝	500	1⅞	4	2⅝	7½	5¼	½ x 3½	80	100	5.6
100 x 80	*114.3 x 88.9*	*89*	*92*	*34.5*	*48*	*102*	*67*	*191*	*133*	-			*2.5*
5 x 1¼	5.563 x 1.660	2	2⅛	500	1⅞	4¼	3¼	9⅛	3¾	⅝ x 3¼	80	100	5.6
125 x 32	*141.3 x 42.4*	*51*	*54*	*34.5*	*48*	*108*	*83*	*232*	*95*	-			*2.5*
5 x 1½	5.563 x 1.900	2	2⅛	500	1⅞	4¼	3¼	9⅛	3¾	⅝ x 3¼	100	130	5.6
125 x 40	*141.3 x 48.3*	*51*	*54*	*34.5*	*48*	*108*	*83*	*232*	*95*	-			*2.5*
5 x 2	5.563 x 2.375	2½	2⅝	500	1⅞	4¼	3¼	9⅛	4⅛	⅝ x 3¼	100	130	5.5
125 x 50	*141.3 x 60.3*	*64*	*67*	*34.5*	*48*	*108*	*83*	*232*	*105*	-			*2.5*
5 x 2½	5.563 x 2.875	2¾	2⅞	500	1⅞	4¼	3¼	9⅛	4⅜	⅝ x 3¼	100	130	5.8
125 x 65	*141.3 x 73.0*	*70*	*73*	*34.5*	*48*	*108*	*83*	*232*	*111*	-			*2.6*
5 x 3	5.563 x 3.500	3½	3⅝	500	1⅞	4⅝	3¼	9⅛	5¼	⅝ x 3¼	100	130	7.1
125 x 80	*141.3 x 88.9*	*89*	*92*	*34.5*	*48*	*117*	*83*	*232*	*133*	-			*3.2*
6 x 1¼	6.625 x 1.660	2	2⅛	500	2	5	3⅜	10⅛	3¾	⅝ x 4¼	100	130	7.2
150 x 32	*168.3 x 42.4*	*51*	*54*	*34.5*	*51*	*127*	*98*	*257*	*95*	*			*3.3*
6 x 1½	6.625 x 1.900	2	2⅛	500	2	5	3⅜	10⅛	3¾	⅝ x 4¼	100	130	7.2
150 x 40	*168.3 x 48.3*	*51*	*54*	*34.5*	*51*	*127*	*98*	*257*	*95*	*			*3.3*
6 x 2	6.625 x 2.375	2½	2⅝	500	2	5	3⅜	10⅛	4⅛	⅝ x 4¼	100	130	7.8
150 x 50	*168.3 x 60.3*	*64*	*67*	*34.5*	*51*	*127*	*98*	*257*	*105*	*			*3.5*
6 x 2½	6.625 x 2.875	2¾	2⅞	500	2	5⅛	3⅜	10⅛	4⅜	⅝ x 4¼	100	130	7.6
150 x 65	*168.3 x 73.0*	*70*	*73*	*34.5*	*51*	*130*	*98*	*257*	*111*	*			*3.4*
6 x 3 O.D.	*6.625 x 2.996*	*2¾*	*2⅞*	*500*	*2*	*5⅛*	*3⅜*	*10⅛*	*4⅜*	*⅝ x 4¼*	*100*	*130*	*7.6*
150 x 80	168.3 x 76.1	70	73	34.5	51	130	98	257	111	*			3.4
6 x 3	6.625 x 3.500	3½	3⅝	500	2	5⅛	3⅜	10⅛	5¼	⅝ x 4¼	100	130	8.0
150 x 80	*168.3 x 88.9*	*89*	*92*	*34.5*	*51*	*130*	*98*	*257*	*133*	*			*3.6*
6 x 4	6.625 x 4.500	4½	4⅝	500	2	5¼	3⅜	10⅛	6½	⅝ x 4¼	100	130	10.4
150 x 100	*168.3 x 114.3*	*114*	*117*	*34.5*	*51*	*133*	*98*	*257*	*165*	*			*4.7*
8 x 2	8.625 x 2.375	2½	2⅝	500	2¼	6⅛	5	12¾	4¼	¾ x 4½	130	180	10.4
200 x 50	*219.1 x 60.3*	*64*	*67*	*34.5*	*57*	*156*	*127*	*324*	*108*	-			*4.7*
8 x 2½	8.625 x 2.875	2¾	2⅞	500	2¼	6⅛	5	12¾	4⅜	¾ x 4½	130	180	10.6
200 x 65	*219.1 x 73.0*	*70*	*73*	*34.5*	*57*	*156*	*127*	*324*	*111*	*M20 x 110*	*175*	*245*	*4.8*
8 x 3	8.625 x 3.500	3½	3⅝	500	2¼	6⅛	5	12¾	5¼	¾ x 4½	130	180	11.5
200 x 80	*219.1 x 88.9*	*89*	*92*	*34.5*	*57*	*156*	*127*	*324*	*133*	*M20 x 110*	*175*	*245*	*5.2*
8 x 4	8.625 x 4.500	4½	4⅝	500	2¼	6¼	5	12¾	6½	¾ x 4½	130	180	16.2
200 x 100	*219.1 x 114.3*	*114*	*117*	*34.5*	*57*	*159*	*127*	*324*	*165*	*M20 x 110*	*175*	*245*	*7.3*

NOTES:
2½", 5" and 6" Nom. Run pipe size Clamp-T may be used on 3" O.D., 5½" O.D. and 6½" O.D. pipe.
• Cannot be used in cross configuration.

▼ Based on use with standard wall pipe.
§ – For additional Bolt Torque information, see page 222.
See Installation & Assembly directions on page 202.
Not for use with copper systems.

GRUVLOK FITTINGS FOR GROOVED-END PIPE

Gruvlok fittings are available through 24" nominal pipe size in a variety of styles. Use the Fitting Size Table to convert nominal pipe size to corresponding pipe O.D.

These fittings are designed to provide minimum pressure drop and uniform strength.

Depending on styles and size, Gruvlok fittings are provided in various materials including ductile iron, forged steel or fabricated steel.

Pressure ratings of Gruvlok standard fittings conform to those of Fig. 7001 Gruvlok coupling.

Not for use in copper systems.

NSF/ANSI 61 UPC

Galvanized Gruvlok Fittings are NSF-61 and Low Lead Approved

c UL us LISTED FM APPROVED

For Listings/Approval Details and Limitations, visit our website at www.anvilintl.com or contact an Anvil® Sales Representative.



FLOW DATA – FRICTIONAL RESISTANCE (EXPRESSED AS EQUIVALENT STRAIGHT PIPE)

Nom. Size	O.D.	Pipe Wall Thickness	Elbow		Tee	
			90°	45°	Branch	Run
In./DN(mm)	*In./mm*	*In./mm*	*Ft./m*	*Ft./m*	*Ft./m*	*Ft./m*
1 *25*	1.315 *33.4*	0.133 *3.4*	1.7 *0.5*	0.9 *0.3*	4.4 *1.3*	1.7 *0.5*
1¼ *32*	1.660 *42.2*	0.140 *3.6*	2.3 *0.7*	1.2 *0.4*	5.8 *1.8*	2.3 *0.7*
1½ *40*	1.900 *48.3*	0.145 *3.7*	2.7 *0.8*	1.3 *0.4*	6.7 *2.0*	2.7 *0.8*
2 *50*	2.375 *60.3*	0.154 *3.9*	3.4 *1.0*	1.7 *0.5*	8.6 *2.6*	3.4 *1.0*
2½ *65*	2.875 *73.0*	0.203 *5.2*	4.1 *1.2*	2.1 *0.6*	10.3 *3.1*	4.1 *1.2*
3 O.D. 76.1	*2.996* 76.1	*0.197* 5.0	*4.3* 1.3	*2.2* 0.7	*10.8* 3.3	*4.3* 1.3
3 *80*	3.500 *88.9*	0.216 *5.5*	5.1 *1.6*	2.6 *0.8*	12.8 *3.9*	5.1 *1.6*
4¼ O.D. 108.0	*4.250* 108.0	*0.220* 5.6	*6.4* 2.0	*3.2* 1.0	*16.1* 4.9	*6.4* 2.0
4 *100*	4.500 *114.3*	0.237 *6.0*	6.7 *2.0*	3.4 *1.0*	16.8 *5.1*	6.7 *2.0*
5¼ O.D. 133.0	*5.236* 133.0	*0.248* 6.3	*8.0* 2.4	*4.0* 1.2	*20.1* 6.1	*8.0* 2.4
5½ O.D. 139.7	*5.500* 139.7	*0.248* 6.3	*8.3* 2.5	*4.2* 1.3	*20.9* 6.4	*8.3* 2.5
5 *125*	5.563 *141.3*	0.258 *6.6*	8.4 *2.6*	4.2 *1.3*	21.0 *6.4*	8.4 *2.6*
6¼ O.D. 159.0	*6.259* 159.0	*0.280* 7.1	*9.7* 3.0	*4.9* 1.5	*24.3* 7.4	*9.7* 3.0
6½ O.D. 165.1	*6.500* 165.1	*0.280* 7.1	*10.0* 3.0	*5.0* 1.5	*24.9* 7.6	*10.0* 3.0
6 *150*	6.625 *168.3*	0.280 *7.1*	10.1 *3.1*	5.1 *1.6*	25.3 *7.7*	10.1 *3.1*
8 *200*	8.625 *219.1*	0.322 *8.2*	13.3 *4.1*	6.7 *2.0*	33.3 *10.1*	13.3 *4.1*
10 *250*	10.750 *273.1*	0.365 *9.3*	16.7 *5.1*	8.4 *2.6*	41.8 *12.7*	16.7 *5.1*
12 *300*	12.750 *323.9*	0.375 *9.5*	20.0 *6.1*	10.0 *3.0*	50.0 *15.2*	20.0 *6.1*
14 *350*	14.000 *355.6*	0.375 *9.5*	22.2 *6.8*	17.7 *5.4*	64.2 *19.6*	22.9 *7.0*
16 *400*	16.000 *406.4*	0.375 *9.5*	25.5 *7.8*	20.4 *6.2*	73.9 *22.5*	26.4 *8.0*
18 *450*	18.000 *457.2*	0.375 *9.5*	28.9 *8.8*	23.1 *7.0*	87.2 *26.6*	31.1 *9.5*
20 *500*	20.000 *508.0*	0.375 *9.5*	32.2 *9.8*	25.7 *7.8*	97.3 *29.7*	34.8 *10.6*
24 *600*	24.000 *609.6*	0.375 *9.5*	38.9 *11.9*	31.1 *9.5*	113.0 *34.4*	40.4 *12.3*

For the reducing tee and branches, use the value that is corresponding to the branch size. For example: for 6" x 6" x 3" tee, the branch value of 3" is 12.8 ft (3.9).

MATERIAL SPECIFICATIONS

CAST FITTINGS:

~~Ductile iron conforming to ASTM A 536, Grade 65-45-12~~

Malleable iron conforming to ASTM A 47

FABRICATED FITTINGS:

1-12" Carbon steel, Schedule 40, conforming to ASTM A 53, Grade B

14-24" Carbon steel, 0.375 wall, conforming to ASTM A 53, Grade B

COATINGS:

Rust inhibiting paint – Color: ORANGE (standard)

Hot Dipped Zinc Galvanized conforming to ASTM A 153 (optional)

Other Colors Available (IE: RAL3000 and RAL9000)

FITTING SIZE

Nominal Size	O.D.	Nominal Size	O.D.
In./DN(mm)	*In./mm*	*In./DN(mm)*	*In./mm*
1 *25*	1.315 *33.4*	5 *140*	5.563 *141.3*
1¼ *32*	1.660 *42.4*	*6¼ O.D.* 159.0	*6.259* 159.0
1½ *40*	1.900 *48.3*	*6½ O.D.* 165.1	*6.500* 165.1
2 *50*	2.375 *60.3*	6 *150*	6.625 *168.3*
2½ *65*	2.875 *73.0*	8 *200*	8.625 *219.1*
3 O.D. 76.1	*2.996* 76.1	10 *250*	10.750 *273.0*
3 *80*	3.500 *88.9*	12 *300*	12.750 *323.9*
3½ *90*	4.000 *101.6*	14 *350*	14.000 *355.6*
4¼ O.D. 108.0	*4.250* 108.0	16 *400*	16.000 *406.4*
4 *100*	4.500 *114.3*	18 *450*	18.000 *457.2*
5¼ O.D. 133.0	*5.236* 133.0	20 *500*	20.000 *508.0*
5½ O.D. 139.7	*5.500* 139.7	24 *600*	24.000 *609.6*

The Fitting Size Chart is used to determine the O.D. of the pipe that the fittings is to be used with. Gruvlok Fittings are identified by either the Nominal size in inches or the Pipe O.D. in/mm.

FIG. 7050

90° Elbow*

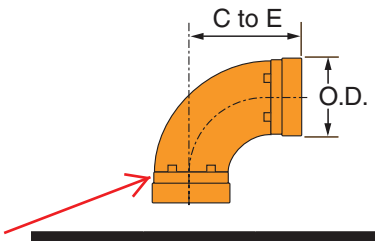

FIGURE 7050
90° ELBOW*

Nominal Size	O.D.	Center to End	Approx. Wt. Ea.
In./DN(mm)	*In./mm*	*In./mm*	*Lbs./Kg*
1 *25*	1.315 *33.4*	2¼ C *57*	0.6 *0.3*
1¼ *32*	1.660 *42.2*	2¾ C *70*	1.0 *0.5*
1½ *40*	1.900 *48.3*	2¾ C *70*	1.2 *0.5*
2 *50*	2.375 *60.3*	3¼ C *83*	1.7 *0.8*
2½ *65*	2.875 *73.0*	3¾ C *95*	2.6 *1.2*
3 O.D. 76.1	*2.996* 76.1	*4 C* 102	*3.6* 1.6
3 *80*	3.500 *88.9*	4¼ C *108*	4.0 *1.8*
3½ *90*	4.000 *101.6*	4½ C *114*	5.5 *2.5*
4¼ O.D. 108.0	*4.250* 108.0	*4¾ C* 121	*7.7* 3.5
4 *100*	4.500 *114.3*	5 C *127*	7.7 *3.5*
5¼ O.D. 133.0	*5.236* 133.0	*5¼ C* 133	*10.4* 4.7
5½ O.D. 139.7	*5.500* 139.7	*5¼ C* 133	*10.9* 4.9
5 *125*	5.563 *141.3*	5½ C *140*	11.1 *5.0*
6¼ O.D. 159.0	*6.259* 159.0	*6 C* 152	*15.2* 6.9
6½ O.D. 165.1	*6.500* 165.1	*6½ C* 165	*17.4* 7.9
6 *150*	6.625 *168.3*	6½ C *165*	16.5 *7.5*
8 *200*	8.625 *219.1*	7¾ C *197*	30.6 *13.9*
10 *250*	10.750 *273.1*	9 C *229*	53.5 *24.3*
12 *300*	12.750 *323.9*	10 C *254*	82 *37.2*
14* *350*	14.000 *355.6*	21 *533*	169.0 *76.7*
16* *400*	16.000 *406.4*	24 *610*	222.0 *100.7*
18* *450*	18.000 *457.2*	27 *686*	280.0 *127.0*
20* *500*	20.000 *508.0*	30 *762*	344.0 *156.0*
24* *600*	24.000 *609.6*	36 *914*	490.0 *222.3*

FIG. 7051

45° Elbow*

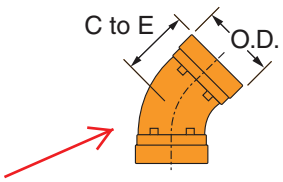

FIGURE 7051
45° ELBOW*

Nominal Size	O.D.	Center to End	Approx. Wt. Ea.
In./DN(mm)	*In./mm*	*In./mm*	*Lbs./Kg*
1 *25*	1.315 *33.4*	1¾ C *44*	0.5 *0.2*
1¼ *32*	1.660 *42.2*	1¾ C *44*	0.7 *0.3*
1½ *40*	1.900 *48.3*	1¾ C *44*	0.9 *0.4*
2 *50*	2.375 *60.3*	2 C *51*	1.5 *0.7*
2½ *65*	2.875 *73.0*	2¼ C *57*	1.9 *0.9*
3 O.D. 76.1	*2.996* 76.1	*2½ C* 64	*2.2* 1.0
3 *80*	3.500 *88.9*	2½ C *64*	3.3 *1.5*
3½ *90*	4.000 *101.6*	2¾ C *70*	4.3 *2.0*
4¼ O.D. 108.0	*4.250* 108.0	*2⅞ C* 83	*4.4* 2.0
4 *100*	4.500 *114.3*	3 C *76*	5.4 *2.4*
5¼ O.D. 133.0	*5.236* 133.0	*3¼ C* 83	*7.3* 3.3
5½ O.D. 139.7	*5.500* 139.7	*3¼ C* 83	*7.8* 3.5
5 *125*	5.563 *141.3*	3¼ C *83*	9.0 *4.1*
6¼ O.D. 159.0	*6.259* 159.0	*3½ C* 89	*10.1* 4.6
6½ O.D. 165.1	*6.500* 165.1	*3½ C* 89	*11.1* 5.0
6 *150*	6.625 *168.3*	3½ C *89*	11.2 *5.1*
8 *200*	8.625 *219.1*	4¼ C *108*	19.8 *9.0*
10 *250*	10.750 *273.1*	4¾ C *121*	34.3 *15.6*
12 *300*	12.750 *323.9*	5¼ C *133*	50.0 *22.7*
14* *350*	14.000 *355.6*	8¾ *222*	92.0 *41.7*
16* *400*	16.000 *406.4*	10 *254*	117.0 *53.1*
18* *450*	18.000 *457.2*	11¼ *286*	146.0 *66.2*
20* *500*	20.000 *508.0*	12½ *317*	179.0 *81.2*
24* *600*	24.000 *609.6*	15 *381*	255.0 *115.7*

FIG. 7052

22 ½° Elbow

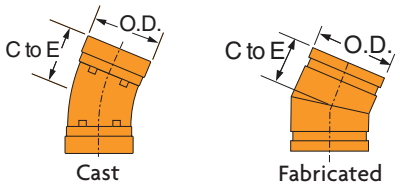

FIGURE 7052
22½° ELBOW*

Nominal Size	O.D.	Center to End	Approx. Wt. Ea.
In./DN(mm)	*In./mm*	*In./mm*	*Lbs./Kg*
1 *25*	1.315 *33.4*	3¼ *83*	0.5 *0.2*
1¼ *32*	1.660 *42.2*	1¾ *44*	0.7 *0.3*
1½ *40*	1.900 *48.3*	1¾ *44*	0.8 *0.4*
2 *50*	2.375 *60.3*	1⅞ C *48*	1.5 *0.7*
2½ *65*	2.875 *73.0*	2 *51*	1.9 *0.9*
3 *80*	3.500 *88.9*	2¼ C *57*	3.2 *1.5*
3½ *90*	4.000 *101.6*	2½ *64*	4.0 *1.8*
4 *100*	4.500 *114.3*	2⅝ C *67*	5.3 *2.4*
5 *125*	5.563 *141.3*	2⅞ *73*	7.2 *3.3*
6 *150*	6.625 *168.3*	3⅛ C *79*	8.2 *3.7*
8 *200*	8.625 *219.1*	3⅞ C *98*	17.8 *8.1*
10 *250*	10.750 *273.1*	4⅜ *111*	30.0 *13.6*
12 *300*	12.750 *323.9*	4⅞ *124*	40.4 *18.3*
14 *350*	14.000 *355.6*	5 *127*	46.0 *20.9*
16 *400*	16.000 *406.4*	5 *127*	52.2 *23.7*
18 *450*	18.000 *457.2*	5½ *140*	65.0 *29.5*
20 *500*	20.000 *508.0*	6 *152*	80.0 *36.3*
24 *600*	24.000 *609.6*	7 *178*	112.0 *50.8*

c UL us LISTED FM APPROVED

For Listings/Approval Details and Limitations, visit our website at www.anvilintl.com or contact an Anvil® Sales Representative.

C - Cast ductile iron, all others are fabricated steel.
* 14"-24" Standard Radius 90° & 45° Elbows are 1½ Long Radius.
Center to end dimensions and weights may differ from those shown in chart, contact an Anvil Representative for more information.

FIG. 7053

11 ¼° Elbow

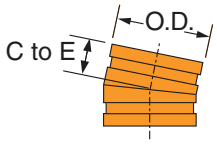

FIGURE 7053
11¼° ELBOW

Nominal Size	O.D.	Center to End	Approx. Wt. Ea.
In./DN(mm)	*In./mm*	*In./mm*	*Lbs./Kg*
1 *25*	1.315 *33.4*	1⅜ *35*	0.3 *0.1*
1¼ *32*	1.660 *42.2*	1⅜ *35*	0.5 *0.2*
1½ *40*	1.900 *48.3*	1⅜ *35*	0.7 *0.3*
2 *50*	2.375 *60.3*	1⅜ *35*	0.9 *0.4*
2½ *65*	2.875 *73.0*	1½ *38*	1.5 *0.7*
3 *80*	3.500 *88.9*	1½ *38*	2.0 *0.9*
3½ *90*	4.000 *101.6*	1¾ *44*	2.8 *1.3*
4 *100*	4.500 *114.3*	1¾ *44*	3.3 *1.5*
5 *125*	5.563 *141.3*	2 *51*	5.0 *2.3*
6 *150*	6.625 *168.3*	2 *51*	6.5 *2.9*
8 *200*	8.625 *219.1*	2 *51*	10.0 *4.5*
10 *250*	10.750 *273.1*	2⅛ *54*	14.5 *6.6*
12 *300*	12.750 *323.9*	2¼ *57*	18.7 *8.5*
14 *350*	14.000 *355.6*	3½ *89*	32.1 *14.6*
16 *400*	16.000 *406.4*	4 *102*	42.0 *19.1*
18 *450*	18.000 *457.2*	4½ *114*	53.2 *24.1*
20 *500*	20.000 *508.0*	5 *127*	65.7 *29.8*
24 *600*	24.000 *609.6*	6 *152*	96.0 *43.5*

FIG. 7050LR

90° Long Radius Elbow

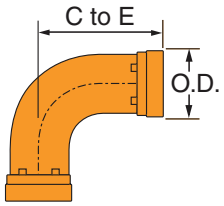

FIGURE 7050 LR
LONG RADIUS 90° ELBOW

Nominal Size	O.D.	Center to End	Approx. Wt. Ea.
In./DN(mm)	*In./mm*	*In./mm*	*Lbs./Kg*
1 *25*	1.315 *33.4*	3½ *89*	0.9 *0.4*
1¼ *32*	1.660 *42.2*	3⅞ *98*	1.3 *0.6*
1½ *40*	1.900 *48.3*	4¼ *108*	1.7 *0.8*
2 *50*	2.375 *60.3*	4⅜ *136*	2.5 *1.1*
2½ *65*	2.875 *73.0*	5¾ *146*	4.9 *2.2*
3 *80*	3.500 *88.9*	5⅞ *181*	6.5 *2.9*
3½ *90*	4.000 *101.6*	7¼ *184*	9.7 *4.4*
4 *100*	4.500 *114.3*	7½ *191*	11.5 *5.2*
5 *125*	5.563 *141.3*	9½ *241*	20.9 *9.5*
6 *150*	6.625 *168.3*	10¾ *273*	29.1 *13.2*
8 *200*	8.625 *219.1*	15 *381*	59.2 *26.9*
10 *250*	10.750 *273.1*	18 *457*	104.0 *47.2*
12 *300*	12.750 *323.9*	21 *533*	147.0 *66.7*
14 *350*	14.000 *355.6*	21 *533*	169.0 *76.7*
16 *400*	16.000 *406.4*	24 *610*	222.0 *100.7*
18 *450*	18.000 *457.2*	27 *686*	280.0 *127.0*
20 *500*	20.000 *508.0*	30 *762*	344.0 *156.0*
24 *600*	24.000 *609.6*	36 *914*	490.0 *222.3*

FIG. 7051LR

45° Long Radius Elbow

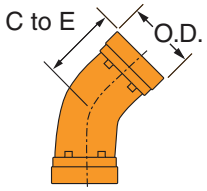

FIGURE 7051 LR
LONG RADIUS 45° ELBOW

Nominal Size	O.D.	Center to End	Approx. Wt. Ea.
In./DN(mm)	*In./mm*	*In./mm*	*Lbs./Kg*
1 *25*	1.315 *33.4*	2½ *64*	0.7 *0.3*
1¼ *32*	1.660 *42.2*	2½ *64*	1.0 *0.5*
1½ *40*	1.900 *48.3*	2½ *64*	1.2 *0.5*
2 *50*	2.375 *60.3*	2¾ *70*	1.7 *0.8*
2½ *65*	2.875 *73.0*	3 *76*	2.9 *1.3*
3 *80*	3.500 *88.9*	3⅜ *86*	4.3 *2.0*
3½ *90*	4.000 *101.6*	3½ *89*	5.3 *2.4*
4 *100*	4.500 *114.3*	4 *102*	7.2 *3.3*
5 *125*	5.563 *141.3*	5 *127*	12.2 *5.5*
6 *150*	6.625 *168.3*	5½ *140*	17.4 *7.9*
8 *200*	8.625 *219.1*	7¼ *184*	34.0 *15.4*
10 *250*	10.750 *273.1*	8½ *216*	57.4 *26.0*
12 *300*	12.750 *323.9*	10 *254*	82.6 *37.5*
14 *350*	14.000 *355.6*	8¾ *222*	92.0 *41.7*
16 *400*	16.000 *406.4*	10 *254*	117.0 *53.1*
18 *450*	18.000 *457.2*	11¼ *286*	146.0 *66.2*
20 *500*	20.000 *508.0*	12½ *317*	179.0 *81.2*
24 *600*	24.000 *609.6*	15 *381*	255.0 *115.7*

C - Cast ductile iron, all others are fabricated steel.
Center to end dimensions and weights may differ from those shown in chart, Contact an Anvil Representative for more information.

c UL us LISTED FM APPROVED

For Listings/Approval Details and Limitations, visit our website at www.anvilintl.com or contact an Anvil® Sales Representative.

FIG. 7060

Tee

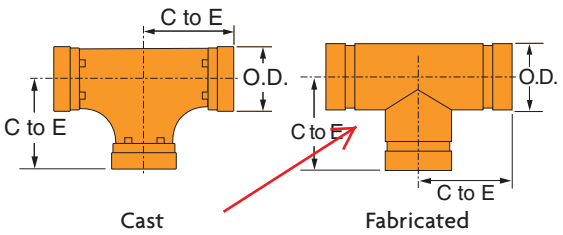

FIGURE 7060 TEE

Nominal Size	O.D.	Center to End	Approx. Wt. Ea.
In./DN(mm)	*In./mm*	*In./mm*	*Lbs./Kg*
1 *25*	1.315 *33.4*	2¼ C *57*	0.9 *0.4*
1¼ *32*	1.660 *42.2*	2¾ C *70*	1.5 *0.7*
1½ *40*	1.900 *48.3*	2¾ C *70*	1.8 *0.8*
2 *50*	2.375 *60.3*	3¼ C *83*	2.4 *1.1*
2½ *65*	2.875 *73.0*	3¾ C *95*	4.0 *1.8*
3 O.D. 76.1	*2.996* 76.1	*4 C* 101	*4.6* 2.1
3 *80*	3.500 *88.9*	4¼ C *108*	5.8 *2.6*
3½ *90*	4.000 *101.6*	4½ C *114*	9.8 *4.4*
4¼ O.D. 108.0	*4.250* 108.0	*4¾ C* 121	*9.3* 4.2
4 *100*	4.500 *114.3*	5 C *127*	10.3 *4.7*
5¼ O.D. 133.0	*5.236* 133.0	*5¼ C* 133	*14.1* 6.4
5½ O.D. 139.7	*5.500* 139.7	*5½ C* 140	*16.1* 7.3
5 *125*	5.563 *141.3*	5½ C *140*	16.2 *7.3*
6¼ O.D. 159.0	*6.259* 159.0	*6 C* 152	*20.8* 9.4
6½ O.D. 165.1	*6.500* 165.1	*6½ C* 165	*24.4* 11.1
6 *150*	6.625 *168.3*	6½ C *165*	25.7 *11.7*
8 *200*	8.625 *219.1*	7¾ C *197*	41.1 *18.6*
10 *250*	10.750 *273.1*	9 C *229*	74.5 *33.8*
12 *300*	12.750 *323.9*	10 C *254*	94.7 *43.0*
14 *350*	14.000 *355.6*	11 *279*	118.0 *53.5*
16 *400*	16.000 *406.4*	12 *305*	146.0 *66.2*
18 *450*	18.000 *457.2*	15½ *394*	218.0 *98.9*
20 *500*	20.000 *508.0*	17¼ *438*	275.0 *125*
24 *600*	24.000 *609.6*	20 *508*	379.0 *172*

C - Cast ductile iron, all others are fabricated steel.

c UL us LISTED FM APPROVED

For Listings/Approval Details and Limitations, visit our website at www.anvilintl.com or contact an Anvil® Sales Representative.

FIG. 7061

Reducing Tee Standard

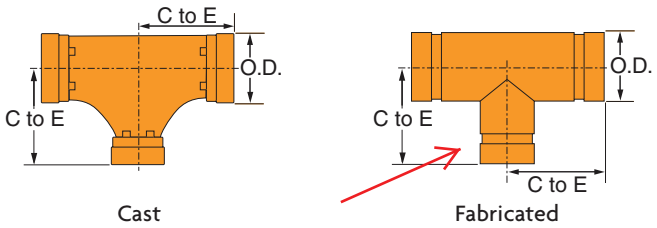

FIGURE 7061 STANDARD REDUCING TEE

Nominal Size	Center to End	Approx. Wt. Ea.	Nominal Size	Center to End	Approx. Wt. Ea.	Nominal Size	Center to End	Approx. Wt. Ea.
In./DN(mm)	*In./mm*	*Lbs./Kg*	*In./DN(mm)*	*In./mm*	*Lbs./Kg*	*In./DN(mm)*	*In./mm*	*Lbs./Kg*
1¼ x 1¼ x 1 *32 x 32 x 25*	2¾ *70*	1.5 *0.7*	5 x 5 x 2 *125 x 125 x 50*	5½ *140*	14 *6.4*	10 x 10 x 8 *250 x 250 x 200*	9 *229*	64.7 *29.3*
1½ x 1½ x 1 *40 x 40 x 25*	2¾ *70*	1.8 *0.8*	5 x 5 x 2½ *125 x 125 x 65*	5½ *140*	14.3 *6.5*	12 x 12 x 4 *300 x 300 x 100*	10 *254*	75.1 *34.1*
1½ x 1½ x 1¼ *40 x 40 x 32*	2¾ *70*	1.8 *0.8*	5 x 5 x 3 *125 x 125 x 80*	5½ *140*	14.6 *6.6*	12 x 12 x 5 *300 x 300 x 125*	10 *254*	75.6 *34.3*
2 x 2 x 1 *50 x 50 x 25*	3¼ C *83*	2.6 *1.2*	5 x 5 x 4 *125 x 125 x 100*	5½ C *140*	17.9 *8.1*	12 x 12 x 6 *300 x 300 x 150*	10 *254*	76.2 *34.6*
2 x 2 x 1¼ *50 x 50 x 32*	3¼ *83*	1.7 *0.8*	6 x 6 x 1 *150 x 150 x 25*	6½ *165*	20.5 *9.3*	12 x 12 x 8 *300 x 300 x 200*	10 *254*	76.3 *34.6*
2 x 2 x 1½ *50 x 50 x 40*	3¼ C *83*	2.7 *1.2*	6 x 6 x 1¼ *150 x 150 x 32*	6½ *165*	20.7 *9.4*	12 x 12 x 10 *300 x 300 x 250*	10 *254*	77.6 *35.2*
2½ x 2½ x 1 *65 x 65 x 25*	3¾ *95*	4.1 *1.9*	6 x 6 x 1½ *150 x 150 x 40*	6½ *165*	21.0 *9.5*	14 x 14 x 6 *350 x 350 x 150*	11 *279*	101 *45.8*
2½ x 2½ x 1¼ *65 x 65 x 32*	3¾ *95*	4.2 *1.9*	6 x 6 x 2 *150 x 150 x 50*	6½ C *165*	26.4 *12.0*	14 x 14 x 8 *350 x 350 x 200*	11 *279*	103 *46.7*
2½ x 2½ x 1½ *65 x 65 x 40*	3¾ *95*	4.3 *2.0*	6 x 6 x 2½ *150 x 150 x 65*	6½ C *165*	26.5 *12.0*	14 x 14 x 10 *350 x 350 x 250*	11 *279*	104 *47.2*
2½ x 2½ x 2 *65 x 65 x 50*	3¾ *95*	4.4 *2.0*	6 x 6 x 3 *150 x 150 x 80*	6½ C *165*	26.5 *12.0*	14 x 14 x 12 *350 x 350 x 300*	11 *279*	105 *47.6*
3 x 3 x 1 *80 x 80 x 25*	4¼ C *108*	7.0 *3.2*	6 x 6 x 4 *150 x 150 x 100*	6½ C *165*	26.5 *12.0*	16 x 16 x 10 *400 x 400 x 250*	12 *305*	129 *58.5*
3 x 3 x 1¼ *80 x 80 x 32*	4¼ *108*	5.8 *2.6*	6 x 6 x 5 *150 x 150 x 125*	6½ C *165*	28.0 *12.7*	16 x 16 x 12 *400 x 400 x 300*	12 *305*	130 *59.0*
3 x 3 x 1½ *80 x 80 x 40*	4¼ *108*	5.9 *2.7*	8 x 8 x 2 *200 x 200 x 50*	7¾ *197*	32.7 *14.8*	16 x 16 x 14 *400 x 400 x 350*	12 *305*	132 *59.9*
3 x 3 x 2 *80 x 80 x 50*	4¼ C *108*	5.5 *2.5*	8 x 8 x 2½ *200 x 200 x 65*	7¾ *197*	33.0 *15.0*	18 x 18 x 10 *450 x 450 x 250*	15½ *394*	194 *88.0*
3 x 3 x 2½ *80 x 80 x 65*	4¼ *108*	6.3 *2.9*	8 x 8 x 3 *200 x 200 x 80*	7¾ *197*	33.5 *15.2*	18 x 18 x 12 *450 x 450 x 300*	15½ *394*	196 *88.9*
4 x 4 x 1 *100 x 100 x 25*	3¾ *95*	7.0 *3.2*	8 x 8 x 4 *200 x 200 x 100*	7¾ C *197*	50.0 *22.7*	18 x 18 x 14 *450 x 450 x 350*	15½ *394*	201 *91.2*
4 x 4 x 1¼ *100 x 100 x 32*	5 *127*	9.6 *4.4*	8 x 8 x 5 *200 x 200 x 125*	7¾ *197*	34.7 *15.7*	18 x 18 x 16 *450 x 450 x 400*	15½ *394*	203 *92.1*
4 x 4 x 1½ *100 x 100 x 40*	5 *127*	10.2 *4.6*	8 x 8 x 6 *200 x 200 x 150*	7¾C *197*	54.0 *24.5*	20 x 20 x 12 *500 x 500 x 300*	17¼ *438*	246 *111.6*
4 x 4 x 2 *100 x 100 x 50*	5 C *127*	10.2 *4.6*	10 x 10 x 2 *250 x 250 x 50*	9 *229*	52.2 *23.7*	20 x 20 x 14 *500 x 500 x 350*	17¼ *438*	248 *112.5*
4 x 4 x 2½ *100 x 100 x 65*	5 C *127*	11.2 *5.1*	10 x 10 x 2½ *250 x 250 x 65*	9 *229*	52.6 *23.9*	20 x 20 x 16 *500 x 500 x 400*	17¼ *438*	250 *113.4*
4 x 4 x 3 *100 x 100 x 80*	5 C *127*	11.4 *5.2*	10 x 10 x 3 *250 x 250 x 80*	9 *229*	53.0 *24.0*	20 x 20 x 18 *500 x 500 x 450*	17¼ *438*	252 *114.3*
5 x 5 x 1 *125 x 125 x 25*	5½ *140*	13.6 *6.2*	10 x 10 x 4 *250 x 250 x 100*	9 *229*	53.6 *24.3*	24 x 24 x 16 *600 x 600 x 400*	20 *508*	342 *155.1*
5 x 5 x 1¼ *125 x 125 x 32*	5½ *140*	13.7 *6.2*	10 x 10 x 5 *250 x 250 x 125*	9 *229*	54.2 *24.6*	24 x 24 x 18 *600 x 600 x 450*	20 *508*	345 *156.5*
5 x 5 x 1½ *125 x 125 x 40*	5½ *140*	13.8 *6.3*	10 x 10 x 6 *250 x 250 x 150*	9 *229*	55.0 *24.9*	24 x 24 x 20 *600 x 600 x 500*	20 *508*	347 *157.4*

Center to end dimensions and weights may differ from those shown in chart, contact an Anvil Representative for more information.

See Fitting Size chart on page 61 for O.D.

FIG. 7063

Tee w/ Threaded Branch

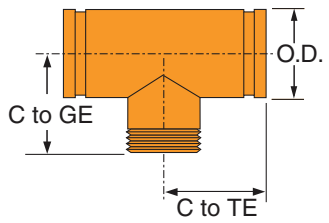

FIGURE 7063
TEE WITH THREADED BRANCH

Nominal Size	O.D.	C to GE	C to TE	Approx. Wt. Ea.
In./DN(mm)	In./mm	In./mm	In./mm	Lbs./Kg
1 25	1.315 33.4	2¼ 57	2¼ 57	0.9 0.4
1¼ 32	1.660 42.2	2¾ 70	2¾ 70	1.4 0.6
1½ 40	1.900 48.3	2¾ 70	2¾ 70	1.7 0.8
2 50	2.375 60.3	3¼ 83	4¼ 108	2.9 1.3
2½ 65	2.875 73.0	3¾ 95	3¾ 95	4.7 2.1
3 80	3.500 88.9	4¼ 108	6 152	8.1 3.7
4 100	4.500 114.3	5 127	7¼ 184	13.5 6.1
5 125	5.563 140	5½ 140	5½ 140	16.7 7.6
6 150	6.625 168.3	6½ 165	6½ 165	25.6 11.6
8 200	8.625 219.1	7¾ 197	7¾ 197	45.0 20.4
10 250	10.750 273.1	9 229	9 229	73.0 33.1
12 300	12.750 323.9	10 254	10 254	98.0 44.5

c UL us LISTED FM APPROVED

For Listings/Approval Details and Limitations, visit our website at www.anvilintl.com or contact an Anvil® Sales Representative.

FIG. 7064

Reducing Tee w/ Threaded Branch

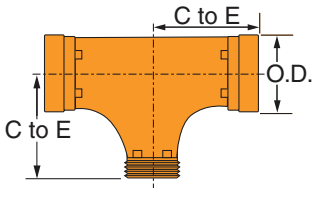

Cast

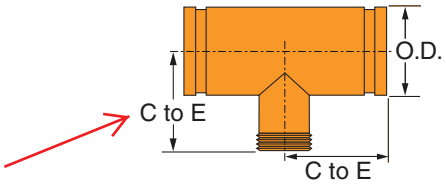

Fabricated

FIGURE 7064 REDUCING TEE WITH THREADED BRANCH

Nominal Size	Center to End	Approx. Wt. Ea.	Nominal Size	Center to End	Approx. Wt. Ea.	Nominal Size	Center to End	Approx. Wt. Ea.
In./DN(mm)	In./mm	Lbs/Kg	In./DN(mm)	In./mm	Lbs/Kg	In./DN(mm)	In./mm	Lbs/Kg
2 x 2 x ¾ 50 x 50 x 20	3¼ 83	1.6 0.7	5 x 5 x 2 125 x 125 x 50	5½ 140	14.5 6.6	12 x 12 x 3 300 x 300 x 80	10 254	84.9 38.5
2 x 2 x 1 50 x 50 x 25	3¼ C 83	2.6 1.2	5 x 5 x 2½ 125 x 125 x 65	5½ 140	17.5 7.9	12 x 12 x 4 300 x 300 x 100	10 254	85.8 38.9
2 x 2 x 1¼ 50 x 50 x 32	3¼ 83	1.7 0.8	5 x 5 x 3 125 x 125 x 80	5½ 140	16.1 7.3	12 x 12 x 5 300 x 300 x 125	10 254	87.0 39.5
2 x 2 x 1½ 50 x 50 x 40	3¼ C 83	2.7 1.2	5 x 5 x 4 125 x 125 x 100	5½ 140	17.9 8.1	12 x 12 x 6 300 x 300 x 150	10 254	88.3 40.1
2½ x 2½ x 1 65 x 65 x 25	3¾ 95	4.1 1.9	6 x 6 x 2 150 x 150 x 50	6½ 165	26.4 12.0	12 x 12 x 8 300 x 300 x 200	10 254	91.2 41.4
2½ x 2½ x 1¼ 65 x 65 x 32	3¾ 95	4.2 1.9	6 x 6 x 2½ 150 x 150 x 65	6½ 165	26.5 12.0	12 x 12 x 10 300 x 300 x 250	10 254	94.8 43.0
2½ x 2½ x 1½ 65 x 65 x 40	3¾ 95	4.3 2.0	6 x 6 x 3 150 x 150 x 80	6½ 165	26.5 12.0	14 x 14 x 8 350 x 350 x 200	11 279	110.0 49.7
2½ x 2½ x 2 65 x 65 x 50	3¾ 95	4.4 2.0	6 x 6 x 4 150 x 150 x 100	6½ 165	26.5 12.0	14 x 14 x 10 350 x 350 x 250	11 279	114.0 51.5
3 x 3 x ¾ 80 x 80 x 20	4¼ 108	5.7 2.6	6 x 6 x 5 150 x 150 x 125	6½ 165	28.0 12.7	14 x 14 x 12 350 x 350 x 300	11 279	117.0 52.8
3 x 3 x 1 80 x 80 x 25	4¼ C 108	7.0 3.2	8 x 8 x 2 200 x 200 x 50	7¾ 197	37.5 17.0	16 x 16 x 8 400 x 400 x 200	12 305	135.0 61.2
3 x 3 x 1¼ 80 x 80 x 32	4¼ 108	5.2 2.4	8 x 8 x 2½ 200 x 200 x 65	7¾ 197	38.0 17.2	16 x 16 x 10 400 x 400 x 250	12 305	139.0 63.0
3 x 3 x 1½ 80 x 80 x 40	4¼ 108	5.3 2.4	8 x 8 x 3 200 x 200 x 80	7¾ 197	38.7 17.6	16 x 16 x 12 400 x 400 x 300	12 305	142.0 64.4
3 x 3 x 2 80 x 80 x 50	4¼ 108	5.5 2.5	8 x 8 x 4 200 x 200 x 100	7¾ 197	50.0 22.7	18 x 18 x 10 450 x 450 x 250	15½ 394	204.0 92.5
3 x 3 x 2½ 80 x 80 x 65	4¼ 108	5.8 2.6	8 x 8 x 5 200 x 200 x 125	7¾ 197	41.0 18.6	18 x 18 x 12 450 x 450 x 300	15½ 394	209.0 94.8
4 x 4 x ¾ 100 x 100 x 20	3¾ 95	7.2 3.3	8 x 8 x 6 200 x 200 x 150	7¾ 197	54.0 24.5	18 x 18 x 14 450 x 450 x 350	15½ 0	211.0 95.7
4 x 4 x 1 100 x 100 x 25	3¾ 95	7.0 3.2	10 x 10 x 2 250 x 250 x 50	9 229	61.8 28.0	18 x 18 x 16 450 x 450 x 400	15½ 0	216.0 98.0
4 x 4 x 1¼ 100 x 100 x 32	5 127	9.1 4.1	10 x 10 x 3 250 x 250 x 80	9 229	63.0 28.6	24 x 24 x 8 600 x 600 x 200	20 508	334.0 152
4 x 4 x 1½ 100 x 100 x 40	5 127	9.2 4.2	10 x 10 x 4 250 x 250 x 100	9 229	64.0 29.0	24 x 24 x 10 600 x 600 x 250	20 508	342.0 155
4 x 4 x 2 100 x 100 x 50	5 127	10.2 4.6	10 x 10 x 5 250 x 250 x 125	9 229	65.1 29.5	24 x 24 x 12 600 x 600 x 300	20 508	349.0 158
4 x 4 x 2½ 100 x 100 x 65	5 127	11.2 5.1	10 x 10 x 6 250 x 250 x 150	9 229	55.0 24.9			
4 x 4 x 3 100 x 100 x 80	5 127	11.4 5.2	10 x 10 x 8 250 x 250 x 200	9 229	64.7 29.3			

C - Cast ductile iron, all others are fabricated steel.

See Fitting Size chart on page 61 for O.D.

FIG. 7076

Gr x Thd Concentric Reducers

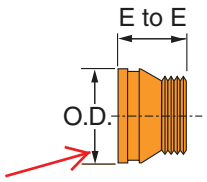

FIGURE 7076 – CONCENTRIC REDUCER GROOVE BY THREAD

Nominal Size	End to End	Approx. Wt. Ea.
In./DN(mm)	*In./mm*	*Lbs./Kg*
1½ x 1 *40 x 25*	2½ *6 4*	0.6 *0.3*
2 x ¾ *50 x 80*	2½ *64*	1.0 *0.5*
2 x 1 *50 x 25*	2½ *64*	0.8 *0.4*
2 x 1¼ *50 x 32*	2½ *64*	1.3 *0.6*
2 x 1½ *50 x 40*	2½ *64*	1.3 *0.6*
2½ x 1 *65 x 25*	2½ *64*	1.0 *0.5*
2½ x 1¼ *65 x 32*	2½ *64*	1.0 *0.5*
2½ x 1½ *65 x 40*	2½ *64*	1.3 *0.6*
2½ x 2 *65 x 50*	2½ *64*	1.2 *0.5*
3 x ¾ *80 x 80*	2½ *64*	1.2 *0.5*
3 x 1 *80 x 25*	2½ *64*	1.2 *0.5*
3 x 1¼ *80 x 32*	2½ *64*	1.3 *0.6*
3 x 1½ *80 x 40*	2½ *64*	1.3 *0.6*
3 x 2 *80 x 50*	2½ *64*	1.3 *0.6*
3 x 2½ *80 x 65*	2½ *64*	1.5 *0.7*
4 x 1 *100 x 25*	3 *76*	2.2 *1.0*
4 x 1¼ *100 x 32*	3 *76*	2.3 *1.0*
4 x 1½ *100 x 40*	3 *76*	2.3 *1.0*
4 x 2 *100 x 50*	3 *76*	2.3 *1.0*
4 x 2½ *100 x 65*	3 *76*	2.3 *1.0*
4 x 3 *100 x 80*	3 *76*	2.6 *1.2*
5 x 4 *125 x 100*	3½ *89*	4.5 *2.0*
6 x 1 *150 x 25*	4 *102*	6.0 *2.7*
6 x 1¼ *150 x 32*	4 *102*	6.0 *2.7*
6 x 1½ *150 x 40*	4 *102*	6.0 *2.7*
6 x 2 *150 x 50*	4 *102*	6.0 *2.7*
6 x 3 *150 x 80*	4 *102*	6.0 *2.7*
6 x 4 *150 x 100*	4 *102*	5.9 *2.7*

All are Fabricated Steel.
See Fitting Size chart on page 61 for O.D.

FIG. 7073 & FIG. 7097

Eccentric Reducers

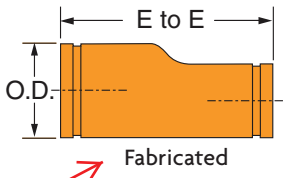

Fig. 7073– Gr. x Gr.

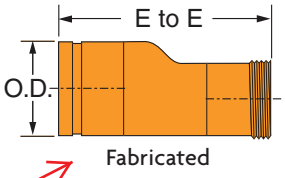

Fig. 7097 – Gr. x Thd.

FIGURE 7073 & 7097 ECCENTRIC REDUCER

Nominal Size	End to End	Approx. Wt. Ea.
In./DN(mm)	*In./mm*	*Lbs./Kg*
1¼ x 1 *32 x 25*	8½ *216*	1.5 *0.7*
1½ x ¾ *40 x 20*	8½ *216*	1.6 *0.7*
1½ x 1 *40 x 25*	8½ *216*	1.7 *0.8*
1½ x 1¼ *40 x 32*	8½ *216*	4.5 *2.0*
2 x ¾ *50 x 80*	9 *229*	2.1 *1.0*
2 x 1 *50 x 25*	9 *229*	2.2 *1.0*
2 x 1¼ *50 x 32*	9 *229*	2.4 *1.1*
2 x 1½ *50 x 40*	9 *229*	2.5 *1.1*
2½ x 1 *65 x 25*	9½ *241*	3.2 *1.5*
2½ x 1¼ *65 x 32*	9½ *241*	3.4 *1.5*
2½ x 1½ *65 x 40*	9½ *241*	3.6 *1.6*
2½ x 2 *65 x 50*	9½ *241*	4.0 *1.8*
3 x 1 *80 x 25*	9½ *241*	4.0 *1.8*
3 x 1¼ *80 x 32*	9½ *241*	4.3 *2.0*
3 x 1½ *80 x 40*	9½ *241*	4.5 *2.0*
3 x 2 *80 x 50*	9½ *241*	4.8 *2.2*
3 x 2½ *80 x 65*	9½ *241*	5.6 *2.5*
3½ x 3 *90 x 80*	9½ *241*	6.6 *3.0*
4 x 1 *100 x 25*	10 *254*	5.9 *2.7*
4 x 1½ *100 x 40*	10 *254*	6.4 *2.9*
4 x 2 *100 x 50*	10 *254*	6.7 *3.0*
4 x 2½ *100 x 65*	10 *254*	7.3 *3.3*
4 x 3 *100 x 80*	10 *254*	7.9 *3.6*
5 x 2 *125 x 50*	11 *279*	9.3 *4.2*
5 x 2½ *125 x 65*	11 *279*	9.9 *4.5*
5 x 3 *125 x 80*	11 *279*	10.7 *4.9*
5 x 4 *125 x 100*	11 *279*	11.9 *5.4*
6 x 1 *150 x 25*	11½ *292*	12.0 *5.4*
6 x 1½ *150 x 40*	11½ *292*	12.1 *5.5*
6 x 2 *150 x 50*	11½ *292*	12.2 *5.5*
6 x 2½ *150 x 65*	11½ *292*	12.8 *5.8*
6 x 3 *150 x 80*	11½ *292*	13.6 *6.2*
6 x 4 *150 x 100*	11½ *292*	14.9 *6.8*
6 x 5 *150 x 125*	11½ *292*	16.2 *7.3*
8 x 3 *200 x 80*	12 *305*	17.9 *8.1*
8 x 4 *200 x 100*	12 *305*	19.7 *8.9*
8 x 5 *200 x 125*	12 *305*	21.4 *9.7*
8 x 6 *200 x 150*	12 *305*	23.2 *10.5*
10 x 4 *250 x 100*	13 *330*	29.7 *13.5*
10 x 5 *250 x 125*	13 *330*	31.7 *14.4*
10 x 6 *250 x 150*	13 *330*	34.0 *15.4*
10 x 8 *250 x 200*	13 *330*	34.4 *15.6*
12 x 6 *300 x 150*	14 *356*	45.2 *20.5*
12 x 8 *300 x 200*	14 *356*	47.7 *21.6*
12 x 10 *300 x 250*	14 *356*	52.0 *23.6*
14 x 6 *350 x 150*	13 *330*	78 *35.4*
14 x 8 *350 x 200*	13 *330*	80 *36.3*
14 x 10 *350 x 250*	13 *330*	84 *38.1*
14 x 12 *350 x 300*	13 *330*	88 *39.9*
16 x 8 *400 x 200*	14 *356*	91 *41.3*
16 x 10 *400 x 250*	14 *356*	96 *43.5*
16 x 12 *400 x 300*	14 *356*	99 *44.9*
16 x 14 *400 x 350*	14 *356*	104 *47.2*
18 x 10 *450 x 250*	15 *381*	110 *49.9*
18 x 12 *450 x 300*	15 *381*	113 *51.3*
18 x 14 *450 x 350*	15 *381*	117 *53.1*
18 x 16 *450 x 400*	15 *381*	121 *54.9*
20 x 10 *500 x 250*	20 *508*	145 *65.8*
20 x 12 *500 x 300*	20 *508*	149 *67.6*
20 x 14 *500 x 350*	20 *508*	152 *68.9*
20 x 16 *500 x 400*	20 *508*	156 *70.8*
20 x 18 *500 x 450*	20 *508*	160 *72.6*
24 x 12 *600 x 300*	20 *508*	179 *81.2*
24 x 14 *600 x 350*	20 *508*	184 *83.5*
24 x 16 *600 x 400*	20 *508*	189 *85.7*
24 x 18 *600 x 450*	20 *508*	194 *88*
24 x 20 *600 x 500*	20 *508*	199 *90.3*

Fabricated Steel *Figure 7097 is available in sizes 1¼ x 1 through 12 x 10.
Center to end dimensions may differ from those shown above. Contact an Anvil Representative for more information.
See Fitting Size chart on page 61 for O.D.

c UL us LISTED FM APPROVED

For Listings/Approval Details and Limitations, visit our website at www.anvilintl.com or contact an Anvil® Sales Representative.

FIG. 7077, FIG. 7078 & FIG. 7079

Swaged Nipples

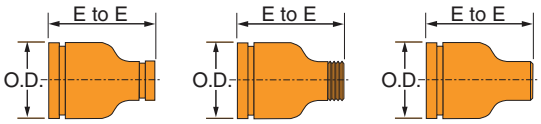

Fig. 7077 Gr x Gr

Fig. 7078 Gr x Thd

Fig. 7079 Gr x Bev

FIGURE 7077, 7078 & 7079 SWAGED NIPPLES

Nominal Size	End to End	Approx. Wt. Ea.	Nominal Size	End to End	Approx. Wt. Ea.
In./DN(mm)	*In./mm*	*Lbs./Kg*	*In./DN(mm)*	*In./mm*	*Lbs./Kg*
2 x 1 *50 x 25*	6½ C *165*	2.0 *0.9*	4 x 2½ *100 x 65*	9 *229*	8.0 *3.6*
2 x 1¼ *50 x 32*	6½ *165*	2.0 *0.9*	4 x 3 *100 x 80*	9 *229*	8.0 *3.6*
2 x 1½ *50 x 40*	6½ *165*	2.0 *0.9*	4 x 3½ *100 x 90*	9 *229*	8.0 *3.6*
2½ x 1 *65 x 25*	7 *178*	3.5 *1.6*	5 x 2 *125 x 50*	11 *279*	12.0 *5.4*
2½ x 1¼ *65 x 32*	7 *178*	3.5 *1.6*	5 x 2½ *125 x 65*	11 *279*	12.0 *5.4*
2½ x 1½ *65 x 40*	7 *178*	3.5 *1.6*	5 x 3 *125 x 80*	11 *279*	12.0 *5.4*
2½ x 2 *65 x 50*	7 *178*	3.5 *1.6*	5 x 4 *125 x 100*	11 *279*	12.0 *5.4*
3 x 1 *80 x 25*	8 *203*	5.0 *2.3*	6 x 1 *150 x 25*	12 *305*	19.0 *8.6*
3 x 1¼ *80 x 32*	8 *203*	5.0 *2.3*	6 x 1¼ *150 x 32*	12 *305*	19.0 *8.6*
3 x 1½ *80 x 40*	8 *203*	5.0 *2.3*	6 x 1½ *150 x 40*	12 *305*	19.0 *8.6*
3 x 2 *80 x 50*	8 *203*	5.0 *2.3*	6 x 2 *150 x 50*	12 *305*	19.0 *8.6*
3 x 2½ *80 x 65*	8 *203*	5.0 *2.3*	6 x 2½ *150 x 65*	12 *305*	19.0 *8.6*
3½ x 3 *90 x 80*	8 *203*	7.0 *3.2*	6 x 3 *150 x 80*	12 *305*	19.0 *8.6*
4 x 1 *100 x 25*	9 *229*	8.0 *3.6*	6 x 3½ *150 x 90*	12 *305*	17.0 *7.7*
4 x 1¼ *100 x 32*	9 *229*	8.0 *3.6*	6 x 4 *150 x 100*	12 *305*	19.0 *8.6*
4 x 1½ *100 x 40*	9 *229*	8.0 *3.6*	6 x 5 *150 x 125*	12 *305*	19.0 *8.6*
4 x 2 *100 x 50*	9 *229*	8.0 *3.6*			

This product is not ULC Listed.
See Fitting Size chart on page 61 for O.D.

UL LISTED FM APPROVED

For Listings/Approval Details and Limitations, visit our website at www.anvilintl.com or contact an Anvil® Sales Representative.

FIG. 7072

Gr x Gr Concentric Reducer

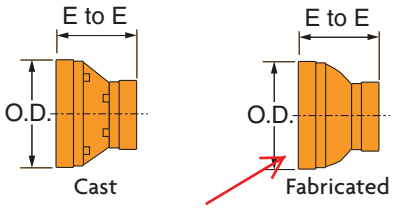

Cast

Fabricated

FIGURE 7072 CONCENTRIC REDUCER

Nominal Size	End to End	Approx. Wt. Ea.	Nominal Size	End to End	Approx. Wt. Ea.	Nominal Size	End to End	Approx. Wt. Ea.
In./DN(mm)	*In./mm*	*Lbs/Kg*	*In./DN(mm)*	*In./mm*	*Lbs/Kg*	*In./DN(mm)*	*In./mm*	*Lbs/Kg*
1¼ x 1 *32 x 25*	2½ *64*	0.6 *0.3*	5 x 2 *125 x 50*	3½ *89*	4.6 *2.1*	14 x 6 *350 x 150*	13 *330*	54.3 *24.6*
1½ x 1 *40 x 25*	2½ *64*	0.6 *0.3*	5 x 2½ *125 x 65*	3½ *89*	4.5 *2.0*	14 x 8 *350 x 200*	13 *330*	54.5 *24.7*
1½ x 1¼ *40 x 32*	2½ *64*	0.6 *0.3*	5 x 3 *125 x 80*	3½ *89*	4.4 *2.0*	14 x 10 *350 x 250*	13 *330*	55.7 *25.3*
2 x 1 *50 x 25*	2½ *64*	0.8 *0.4*	5 x 4 *125 x 100*	3½ C *89*	4.5 *2.0*	14 x 12 *350 x 300*	13 *330*	57.3 *26.0*
2 x 1¼ *50 x 32*	2½ C *64*	1.3 *0.6*	6 x 1 *150 x 25*	4 *102*	6.8 *3.1*	16 x 8 *400 x 200*	14 *356*	65.4 *29.7*
2 x 1½ *50 x 40*	2½ C *64*	1.3 *0.6*	6 x 1½ *150 x 40*	4 *102*	6.9 *3.1*	16 x 10 *400 x 250*	14 *356*	66.7 *30.3*
2½ x 1 *65 x 25*	2½ *64*	1.0 *0.5*	6 x 2 *150 x 50*	4 C *102*	6.0 *2.7*	16 x 12 *400 x 300*	14 *356*	68.1 *30.9*
2½ x 1¼ *65 x 32*	2½ *64*	1.0 *0.5*	6 x 2½ *150 x 65*	4 *102*	6.0 *2.7*	16 x 14 *400 x 350*	14 *356*	71.0 *32.2*
2½ x 1½ *65 x 40*	2½ *64*	1.3 *0.6*	6 x 3 *150 x 80*	4 C *102*	5.4 *2.4*	18 x 10 *450 x 250*	15 *381*	82.3 *37.3*
2½ x 2 *65 x 50*	2½ C *64*	1.6 *0.7*	6 x 4 *150 x 100*	4 C *102*	5.6 *2.5*	18 x 12 *450 x 300*	15 *381*	83.6 *37.9*
3 x 1 *80 x 25*	2½ *64*	1.2 *0.5*	6 x 5 *150 x 125*	4 C *102*	6.0 *2.7*	18 x 14 *450 x 350*	15 *381*	86.2 *39.1*
3 x 1¼ *80 x 32*	2½ *64*	1.3 *0.6*	8 x 3 *200 x 80*	5 *127*	12.0 *5.5*	18 x 16 *450 x 400*	15 *381*	87.2 *39.6*
3 x 1½ *80 x 40*	2½ *64*	1.3 *0.6*	8 x 4 *200 x 100*	5 C *127*	9.0 *4.1*	20 x 10 *500 x 250*	20 *508*	123.0 *55.8*
3 x 2 *80 x 50*	2½ C *64*	1.4 *0.6*	8 x 5 *200 x 125*	5 *127*	11.5 *5.2*	20 x 12 *500 x 300*	20 *508*	125.0 *56.7*
3 x 2½ *80 x 65*	2½ C *64*	1.5 *0.7*	8 x 6 *200 x 150*	5 C *127*	10.6 *4.8*	20 x 14 *500 x 350*	20 *508*	129.0 *58.5*
3½ x 3 *90 x 80*	3 *76*	1.8 *0.8*	10 x 4 *250 x 100*	6 *152*	20 *9.1*	20 x 16 *500 x 400*	20 *508*	131.0 *59.4*
4 x 1 *100 x 25*	3 *76*	2.2 *1.0*	10 x 5 *250 x 125*	6 *152*	20 *9.1*	20 x 18 *500 x 450*	20 *508*	133.0 *60.3*
4 x 1¼ *100 x 32*	3 *76*	2.2 *1.0*	10 x 6 *250 x 150*	6 C *152*	20 *9.1*	24 x 10 *600 x 250*	20 *508*	147.0 *66.7*
4 x 1½ *100 x 40*	3 *76*	2.3 *1.0*	10 x 8 *250 x 200*	6 *152*	23.9 *10.8*	24 x 12 *600 x 300*	20 *508*	149.0 *67.6*
4 x 2 *100 x 50*	3 C *76*	2.4 *1.1*	12 x 4 *300 x 100*	7 *178*	25 *11.3*	24 x 14 *600 x 350*	20 *508*	152.0 *68.9*
4 x 2½ *100 x 65*	3 C *76*	2.6 *1.2*	12 x 6 *300 x 150*	7 *178*	29 *13.2*	24 x 16 *600 x 400*	20 *508*	153.0 *69.4*
4 x 3 *100 x 80*	3 C *76*	3.2 *1.5*	12 x 8 *300 x 200*	7 *178*	29 *13.2*	24 x 18 *600 x 450*	20 *508*	154.0 *69.9*
4 x 3½ *100 x 90*	3 *76*	3.6 *1.6*	12 x 10 *300 x 250*	7 *178*	32.4 *14.7*	24 x 20 *600 x 500*	20 *508*	155.0 *70.3*

C - Cast ductile iron, all others are fabricated steel.

c UL US LISTED FM APPROVED

For Listings/Approval Details and Limitations, visit our website at www.anvilintl.com or contact an Anvil® Sales Representative.

31

Mécanique Nordique
Plumbing
Heating
Ventillation
mecanique.nordique@hotmail.com

1255 Rue J.A.Bombardier
Lévis, Québec
G7A 2P4
Téléphone: 418-496-1109
Télécopieur: 418-496-3803

REVIEWED BY CONTRACTOR
Kudlik Construction Ltd.
NAME: Sandra Rousseau P.Eng
DATE: Jul 23, 2018

IQALUIT WWTP UPGRADE

DRAWING FOR APPROVAL

Ingineer : NUNAMI STANTEC

DRAWING #: AD-031

Section 23 31 14
Article 2.1 2.2 2.3
Plans
Application : Duct Sealant and Fiberglass tape
Brand : TCE
Model : MULTI- PURPOSE
Revised # :
Supplyer : Emco

Pages incl. 6
Date : **2018-07-23**
By : **Mécanique Nordique Inc.**

STANTEC PROJECT #: 110126045
SUBMITTAL # AD-031

This review by Stantec is for general conformance with the design concept of Stantec's design of the:
☐ Architectural ☐ Electrical
☐ Structural ☐ Other
☑ Mechanical

component(s) only and does not mean that Stantec has verified or approves the shop drawing(s). The Contractor remains solely responsible for the shop drawing(s) and this review by Stantec does not relieve the Contractor of the Contractor's responsibility for errors or omissions in the shop drawing(s) or for meeting all requirements of the contract documents. This review does not mean that Stantec approves the detailed design inherent in the shop drawing, responsibility for which shall remain with the Contractor submitting same, nor does this review mean that Stantec accepts any deviation of the shop drawing(s) from the contract documents. The Contractor is responsible for confirming all dimensions and correlating them at the job site, for all construction means, methods and techniques, and for coordination of construction work of all trades, including coordination of all shop drawings.

Stantec

☑ REVIEWED
☐ REVIEWED, AS NOTED
☐ REVISE AND RESUBMIT
☐ NOT REVIEWED

DATE 2018-07-26
BY Brendan Zrum, P.Eng

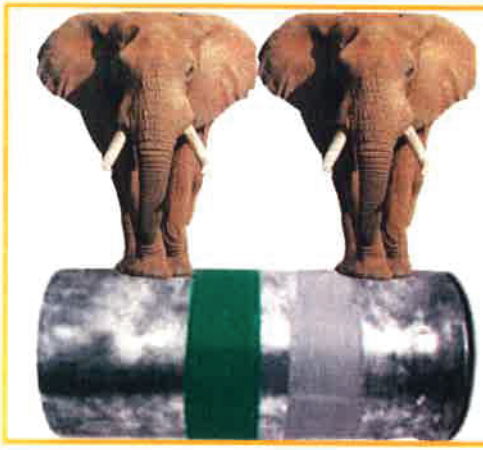

MULTI-PURPOSE

MP MULTI-PURPOSE

FOR SEALING JOINTS AND SEAMS OF HEATING & VENTILATION DUCTWORK

MULTI-PURPOSE SEALANT
"One Sealant does it all."

EXCLUSIVE FEATURES

FLEXIBLE

NON TOXIC

FLAME RESISTANT

DEPENDABILITY

FIREPROOF

ULC S-102 LISTED
FILE CR 1207

SMOKE PROOF

BELOW FREEZING APPLICATION

EACH GALLON BEARS A U.L.C. LABEL

- Will always remain flexible - 600% Elongation Cured Film.
- Will resist up to 25" Static Pressure.
- Will adhere to most dirty surfaces without conventional cleaning measures.
- No dangerous smell causing -
  Oxygen starvation
  Increased pulsation
  Eliminates headaches
- Will not flash or burn in the wet or dry state.
- Does not require special storage
- Special precautions not necessary. No fear of explosions.
- You have now solved your sealing problems with Multi-Purpose - economically and certain of no leaks.

DISTRIBUTED BY:

TCE **Trans Continental Equipment Ltd** Since 1952 info@tce.ca www.tce.ca
1025 Butler street, Montreal, Qc, Canada H3K 3E9 Tel.: 514 937-9145 **Toll Free: 800 825-9145** Fax: 514 937-3196
240 Cordova Road, Oshawa, On, Canada L1J 1N9 Tel.: 905 579-0878 **Toll Free: 800 314-9845** Fax: 905 579-2589
technical.qxp:mp_special_01 06/2008

PG 53 of 55
JUL 01 2010

MULTI-PURPOSE®

FLAME RESISTANT DUCT SEALANT

For High, Medium, or Low Velocity Connections

Technical Data And Characteristics

Solid Content: 55%
Viscosity: 1,000,000 cps
Storage life: 1 years
Flexibility: excellent
Cured film: 600% elongation
Application temperature: 5°C to 28°C / 40°F to 82°F
Service temperature range: -30°C to 65°C / -22°F to 150°F
Freeze/thaw stability: passes 5 cycles
Color: grey
Coverage: up to 600 lineal feet per gallon
Static pressure: up to 25 inch
Drying time: 24-72 hours (ambient)
Clean up: warm water
Toxicity: Non toxic. No dangerous smell causing oxygen starvation. No increased pulsation, eliminates headaches.

Tested in accordance with U.L.I. 723 and U.L.C. S-102	
Flame Spread Classification	7
Smoke Developed	0
Fuel contributed	0
Flash Point (Open Cup)	Nil



"The longer it's on, the stronger it gets!"

Advantages

Testing under normal conditions. Seals upon contact. Not necessary to seal the inside of ducts and joints. Will adhere to most dirty surfaces without conventional cleaning measures. Time saving application method. Once cured no possibility of leaks through drying or moisture reaction. Cleans up in moments with water, no solvents are necessary. Application of sealer after ducts are installed.

Specification

Seal all joints with a water based sealant which shall be non-toxic, non-combustible and flame resistant in a wet or dry state and in order for acceptance it shall be tested in accordance with U.L.C. S-102 / U.L.I. 723 surface burning tests. Flame spread shall not exceed 25, and smoke developed shall not exceed 50. Flash point (open cup) shall be nil. Conforms to National Building Code standard 6.2.4.6.(2).

Standard of Acceptance: Multi-Purpose® as provided by Trans Continental Equipment Ltd, Montreal, Oshawa.

TCE Trans Continental Equipment Ltd Since 1952 info@tce.ca www.tce.ca
1025 Butler street, Montreal, Qc, Canada H3K 3E9 Tel.: 514 937-9145 Toll Free: 800 825-9145 Fax: 514 937-3196
240 Cordova Road, Oshawa, On, Canada L1J 1N9 Tel.: 905 579-0878 Toll Free: 800 314-9845 Fax: 905 579-2589

ChimneyFLEXible, ClipCap, ClipFlashing, ClipTee, Drop-In, Drop-Up and Quadralock are registered and/or trademarks of Trans Continental Equipment Ltd. ClipCap/ClipFlashing locking system is patented U.S. Pat No. 6145258 and Can. Pat. No. 2276674. ClipSnoutTee Patent Pending
Prices subject to inadvertent error or change without notice.

TESTED APPLICATIONS

a) High and Low Velocity Ducts, Chambers and Plenums. Sealing of all beads & joints. All types of flexible hoses.
b) Galvanized, Steel, Copper, Aluminum, PVC, Plastic, Lead, Asbestos cement, Chipboard fiber and Fibreglass ductwork and Plenums.
c) All types of insulating materials.
d) Repair of leaks on systems which are operating.
e) Repair of pipe insulation, magnesium, asbestos, fibreglass and cork.

ADVANTAGES OVER CONVENTIONAL SEALERS

1) Installation in temperatures below freezing.
2) Testing under normal conditions.
3) Seals upon contact.
4) Not necessary to seal the inside of ducts and joints.
5) Will adhere to most dirty surfaces without conventional cleaning methods.
6) Time saving application method.
7) Once cured no possibility of leaks through dryout or moisture reaction.
8) Clean up in moments with water, no solvents are necessary.
9) Application of sealer after ducts are installed.

METHOD OF APPLICATION

a) Apply a liberal coat of MP Sealant over the area to be sealed. Let dry and test up to 6" Static Pressure (S.P.)
b) Over 6" S.P. follow step #a, then wrap our special open weave tape over the area to be sealed. Overlap 2", pull tightly and then apply a second liberal coat covering all the weave tape.Let dry and test up to 25" S.P.
c) You now have a sealed joint which will be ready for testing in 24 - 72 hours.

TECHNICAL DATA

MP Sealer is a specially prepared sealant which adheres to almost anything. Once dry it is no longer soluble.
When necessary, the combination of Multi-Purpose sealer and Multi-Purpose open weave tape sets into a flexible air tight seal, which is exceptionally durable. Multi-Purpose is not intended for use as an insulating material and has no K factor.

TEMPERATURE RANGE

TEMPERATURE RANGE -	4° to 300°F / -15° to 150°C
STATIC PRESSURE -	up to 25" S.P.
FLEXIBILITY -	excellent (cured film 600% elongation)
WATER RESISTANCE -	very good
DRYING TIME -	24 - 72 hours
STORAGE LIFE -	24 months
COVERAGE -	600 Linear ft. per gal x 3" wide
COLOR -	green

SPECIFICATIONS:

FOR HIGH OR LOW VELOCITY



LOOK FOR THE LABEL

Seal all joints with a water based sealant which shall be non-toxic, non-combustible and flame resistant in a wet or dry state and in order for acceptance shall be tested in accordance with U.L.C. (S-102) (M-1980). Flame spread shall not exceed 25, and smoke developed shall not exceed 50. Flash point (open cup) - Nil. Conforms to National Building Code standard (see paragraph 6.2.4.6.(2). Each gallon shall bear a U.L.C. label.

Standard of acceptance -
"Multi-Purpose" as provided by
Transcontinental Equipment, Montreal, Toronto

technical.qxp:mp_special_02 06/2008/MR1209/OC2609

TCE Trans Continental Equipment Ltd Since 1952 info@tce.ca www.tce.ca
1025 Butler street, Montreal, Qc, Canada H3K 3E9 Tel.: 514 937-9145 **Toll Free: 800 825-9145** Fax: 514 937-3196
240 Cordova Road, Oshawa, On, Canada L1J 1N9 Tel.: 905 579-0878 **Toll Free: 800 314-9845** Fax: 905 579-2589

MULTI-PURPOSE®

OPEN WEAVE TAPE

For H.V.A.C. Systems operating at 6"+ Static pressure

MULTI-PURPOSE® NEW OPEN WEAVE TAPE

This new tape has the following advanced properties:

a) is made of a cotton/poly or fiberglass material.
b) more open area perforation, allows Multi-Purpose® sealant to flow through the pores and homogenize with both layers.
c) this allows quicker drying time because the outside air can get to the inner layer much quicker.
d) gives a stronger and even more flexible joint.
e) Our 3" permascreen tape is one inch wider than normal permascreen tape and instead of supplying a 50 yard roll, it comes in a 100 yard roll which means you don't have to wrap around the duct joint twice, therefore you save on cutting and installation or wrapping time.

PLEASE NOTE

One gallon of MULTI-PURPOSE® sealant covers 300 linear feet x 3 inches wide (2 coats), and one roll of MULTI-PURPOSE® NEW OPEN WEAVE TAPE also covers 300 lineal feet x 3 inches wide.

With our NEW Open Weave tape, inter-action with the sealant takes place resulting in a **STRONGER** and more **FLEXIBLE** joint. This results in **ONE COMPLETE FLEXIBLE BOND.**

Trans Continental Equipment Ltd Since 1952 info@tce.ca www.tce.ca
1025 Butler street, Montreal, Qc, Canada H3K 3E9 Tel.: 514 937-9145 **Toll Free: 800 825-9145** Fax: 514 937-3196
240 Cordova Road, Oshawa, On, Canada L1J 1N9 Tel.: 905 579-0878 **Toll Free: 800 314-9845** Fax: 905 579-2589

MULTI-PURPOSE®

DUCT SEALANT

Bulletin
Workplace Hazardous Material Information System (W.H.M.I.S.)

The new Canadian legislation and regulations concerning worker's right-to-know come into effect on October 31,1988. This system has as its key elements cautionary labelling of containers of hazardous materials, provision of Material Safety Data Sheets(MSDS's) and provision of worker's education.

Because of the difficulty of meeting the October 31, 1988 implementation date, Secondary Suppliers (users of chemical raw materials) have been granted an extention to March 15, 1989 for implementation. Reference:
Canada Gazette, Part 1, August 27, 1988.

Prior to the March 15, 1989 implementation date, to assist you in your compliance with W.H.M.I.S., Trans Continental Equipment Ltd. will apply a classified "workplace" label to all controlled products (where applicable) that we supply you with. (See note).

Also prior to March 15, 1989 you can refer to existing Trans Continental Equipment Ltd. MSDS's for precautionary and first aid measures.

NOTE: Product used by you: MULTI-PURPOSE® DUCT SEALER (GREEN or GREY).
This product does not fall under the ingredients disclosure list of over one thousand seven hundred (1700) ingredients and subsequently does not require any "workplace" label. Congratulations on using the **safest duct sealer**. Your men will be grateful knowing that special precautionary measures need not be applied when using or storing Multi-Purpose®.

May 1991.

Trans Continental Equipment Ltd Since 1952 info@tce.ca www.tce.ca
1025 Butler street, Montreal, Qc, Canada H3K 3E9 Tel.: 514 937-9145 **Toll Free: 800 825-9145** Fax: 514 937-3196
240 Cordova Road, Oshawa, On, Canada L1J 1N9 Tel.: 905 579-0878 **Toll Free: 800 314-9845** Fax: 905 579-2589

32

Mécanique Nordique
Plumbing
Heating
Ventillation
mecanique.nordique@hotmail.com

1255 Rue J.A.Bombardier
Lévis, Québec
G7A 2P4
Téléphone: 418-496-1109
Télécopieur: 418-496-3803

REVIEWED BY CONTRACTOR
Kudlik Construction Ltd.
NAME: Sandra Rousseau P.Eng
DATE: Jul 23, 2018

IQALUIT WWTP UPGRADE

DRAWING FOR APPROVAL

Ingineer : NUNAMI STANTEC

DRAWING #: AD-032

Section		23 05 29
Article		2.4 2.5
Plans		M-301 M-302 M-500
Application	:	PIPE HANGERS
Brand	:	ANVIL
Model	:	260 , 181, 161 , 261 , 94
Revised #	:	
Supplyer	:	Wolseley

Pages incl.		8
Date	:	**2018-07-23**
By	:	**Mécanique Nordique Inc.**

STANTEC PROJECT #: 110126045

SUBMITTAL # AD-032

This review by Stantec is for general conformance with the design concept of Stantec's design of the:

- ☐ Architectural
- ☐ Structural
- ☑ Mechanical
- ☐ Electrical
- ☐ Other

Stantec

component(s) only and does not mean that Stantec has verified or approves the shop drawing(s). The Contractor remains solely responsible for the shop drawing(s) and this review by Stantec does not relieve the Contractor of the Contractor's responsibility for errors or omissions in the shop drawing(s) or for meeting all requirements of the contract documents. This review does not mean that Stantec approves the detailed design inherent in the shop drawing, responsibility for which shall remain with the Contractor submitting same, nor does this review mean that Stantec accepts any deviation of the shop drawing(s) from the contract documents. The Contractor is responsible for confirming all dimensions and correlating them at the job site, for all construction means, methods and techniques, and for coordination of construction work of all trades, including coordination of all shop drawings.

- ☑ REVIEWED
- ☐ REVIEWED, AS NOTED
- ☐ REVISE AND RESUBMIT
- ☐ NOT REVIEWED

DATE 2018-07-26

BY Brendan Zrum, P.Eng

Fig. 260 (Formerly Afcon Fig. 371) Adjustable Clevis Hanger



Size Range: 1/2" through 30"
Material: Carbon steel
Finish: ☐ Plain, ☑ 8" & Smaller: Zinc Plated (Hot-Dip Galvanized optional), 10" & Larger: Hot-Dip Galvanized with Zinc Plated Bolts & Nuts, or ☐ Primed, also available in ☐ Plastic or ☐ Epoxy Coated.
Service: Recommended for the suspension of stationary pipe lines.
Maximum Temperature: Plain 650° F, Galvanized and Epoxy 450° F
Approvals: Complies with Federal Specification A-A-1192A (Type 1), *WW-H-171-E (Type 1)*, ANSI/MSS SP-69 and MSS SP-58 (Type 1). FM Approved (Sizes 3/4" through 8"), UL and ULC Listed (Sizes 1/2" through 8")
Installation: Hanger load nut *above* clevis must be tightened securely to assure proper hanger performance.
Adjustment: Vertical adjustment without removing pipe may be made from 3/8" through 5 1/8", varying with the size of clevis. Tighten upper nut after adjustment.
Features:

- Design has yoke on outside of lower U-strap so yoke cannot slide toward center of bolt, thus bending of bolt is minimized.
- Sizes 5" and up have rod and two nuts instead of bolt and nut; thread length on clevis rod is such that the thread locks the nuts in place, and threads are not in shear plane.

Ordering: Specify pipe size, figure number, name and finish.
Notes:

- Punched forming holes may be present on certain sizes of this clevis hanger. These holes are solely for the purpose of manufacturing, and do not effect the structural integrity or load carrying capacities of these hangers.
- For insulated line options without shields, see Figures 260 ISS and Figure 300. For insulated line options with shields, see Figures 167 and 168. For ductile iron pipe sizes, see Figure 590.
- Fig. 260F (Felt lined) – available for use for suspension of copper (or other material) so as to prevent electrolysis between the dissimilar metals of the hanger and the pipe, tube or conduit.

Caution: When an oversize clevis is used, a pipe spacer or multispacer should be placed over clevis bolt to ensure that the lower U-strap will not move in on the bolt.

PROJECT INFORMATION	APPROVAL STAMP
Project:	☐ Approved
Address:	☐ Approved as noted
Contractor:	☐ Not approved
Engineer:	**Remarks:**
Submittal Date:	
Notes 1:	
Notes 2:	

Fig. 260 (Formerly Afcon Fig. 371) Adjustable Clevis Hanger (cont.)

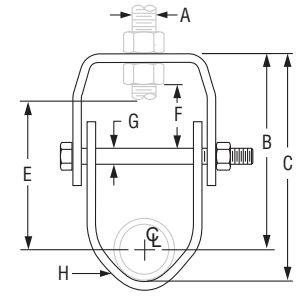

Pipe Size 1/2" to 3/4"

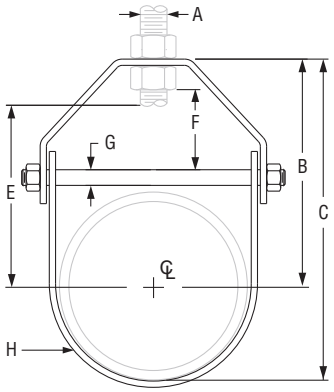

Pipe Sizes 1" and Larger

FIG. 260: DIMENSIONS (IN) • LOADS (LBS) • WEIGHTS (LBS)

Pipe Size	Max Load	Span Ft.	Weight	Rod Size A	B	C	Rod Take Out E	Adjust. F	G	H Width Lower
1/2	610	7*	0.34	3/8	2 3/16	2 11/16	1 1/2	5/8	1/4	1
3/4			0.34		2		1 5/16			
1	730		0.35		2 5/16	3	1 5/8			
1 1/4			0.40		2 3/8	3 1/4	1 11/16			
1 1/2		9*	0.45		2 13/16	3 13/16	2 1/8	7/8		
2		10*	0.50		3 5/16	4 1/2	2 5/8	1 1/8		
2 1/2	1,350	11*	0.65	1/2	4 1/16	5 1/2	3 3/16	1 5/16	3/8	
3		12*	0.85		4 3/4	6 1/2	4 1/16	1 5/8		
3 1/2		13*	1.10		5 1/16	7 1/16	4 3/16	1 13/16		1 1/4
4	1,430	14*	1.51	5/8	5 9/16	7 13/16	4 1/2	1 11/16	3/8	
5		16*	1.70		6 9/16	8 15/16	5 1/2	1 15/16		1 3/16
6	1,940	17*	3.10	3/4	6 15/16	10 1/4	5 3/4	1 11/16	1/2	1 7/16
8	2,000	19*	4.75		8 3/8	12 11/16	7 3/16	2		
10	3,600	22*	8.60	7/8	9 7/8	15 1/4	8 7/16	2 1/8	5/8	1 3/4
12	3,800	23*	11.20		11 9/16	17 15/16	10 1/8	2 13/16		2
14	4,200	25*	12.50	1	12 9/16	19 9/16	10 11/16	2 11/16	3/4	
16	4,600	27	19.85		14	22	12	2 3/4	1	2 1/2
18	4,800	28	22.25		15 15/16	24 15/16	13 15/16	3 13/16		
20	4,800	30	40.33	1 1/4	17 9/16	27 9/16	15 3/16	3 7/8	1 1/4	3
24	4,800	32	49.83		19 13/16	31 13/16	17 5/16		7/8*	
30**	6,000	33	70.18		24 3/16	39 3/16	21 9/16	5 1/8	1 1/4	

"Span" represents the maximum recommended distance between hangers on a continuous and straight run of horizontal standard weight steel pipe filled with water. In all cases, verify that chosen location of hangers does not subject hangers to a load greater than the maximum recommended load shown above. *Indicates that span represents the maximum span for water filled pipe.

* The 24" pipe size assembly includes a 1 1/4" SCH 40 pipe spacer over the 7/8" threaded rod.

** 30" pipe size: When assembled, the U-strap sits outside of the yoke.

Fig. 181

Adjustable Steel Yoke Pipe Roll

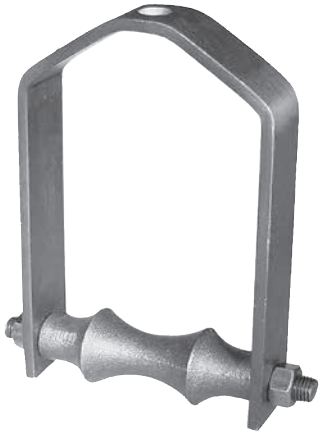

Size Range: 2 1/2" through 24"

Material: Cast iron roll; carbon steel yoke, roll rod and hex nuts

Finish: ☐ Plain, ☑ Hot-Dip Galvanized Yoke with Zinc Plated Parts or ☐ Resilient Coated

Service: For suspension of pipe from a single rod where longitudinal movement may occur because of expansion or contraction.

Maximum Temperature: 400° F at roller, 300° F at resilient coated roller.

Approvals: Complies with Federal Specification A-A-1192A (Type 43), *WW-H-171-E (Type 44)*, ANSI/MSS SP-69 and MSS SP-58 (Type 43).

Features: Advantages of pipe rollers with a protective resilient coated covering.

- Non conductive pipe rollers - prevent the passing of current from pipeline to structure.
- Corrosion resistant - for protection against severe weather conditions, moderate corrosive conditions such as marine atmospheres and weather resistant to ultra-violet radiation.
- Low coefficient of friction between pipe and resilient coated pipe roller.

How to size: If the roll is to support bare pipe, select the size directly from nominal pipe size (see below). If used with pipe covering protection saddle, see Figure 160 to 166A for size of pipe roll to be used.

Ordering: Specify pipe roll size, figure number, name and finish. Be certain to order oversized rolls when insulation and protection saddles are required.

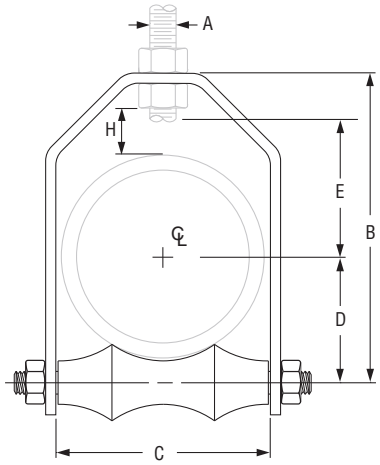

FIG. 181: DIMENSIONS (IN) • LOADS (LBS) • WEIGHT (LBS)

Pipe Size	Max O.D. of Covering	Max Load	Wgt.	Rod Size A	B	C	D	Rod Take Out E	H
2 1/2	3	225	1.7	1/2	5 3/4	3 1/4	1 15/16	2 7/8	1 11/16
3	3 5/8	310	2.2		6 3/8	3 7/8	2 1/4	3 1/8	1 5/8
3 1/2	4 1/8	390	2.5		7	4 3/8	2 9/16	3 1/2	1 11/16
4	4 11/16	475	3.2	5/8	7 9/16	4 15/16	2 13/16	3 5/8	1 5/8
5	5 3/4	685	6.3		9 1/8	6	3 7/16	4 1/2	1 15/16
6	6 7/8	780	9.3	3/4	10 5/16	7 1/8	4	5	1 7/8
8	9		14.5		12 11/16	9 1/4	5 1/8	6 1/8	2
10	11	965	18.8	7/8	15 1/16	11 1/4	6 3/8	7 1/4	2 1/16
12	13	1,200	27.7		17 7/16	13 1/4	7 7/16	8 3/8	2 1/4
14	14 1/4		39.1	1	18 7/8	14 1/2	8 3/8	8 3/4	2
16	16 1/4		49.1		20 13/16	16 1/2	9 3/8	9 11/16	1 15/16
18	18 1/4	1,400	57.8		23 3/4	18 1/2	10 7/16	11 7/16	2 13/16
20	20 1/4	1,600	75.9	1 1/4	26	20 1/2	11 5/8	12 1/4	2 1/2
24	24 1/4	1,800	119.3	1 1/2	32 5/16	24 5/8	13 15/16	15 3/4	4 3/8

DI/CI ROLL SIZING

DI/CI Pipe Size	Fig. 181 Roller Size
3	4
4	5
6	6
8	8
10	10
12	14
14	16
16	18
18	20
20	24

PROJECT INFORMATION	APPROVAL STAMP
Project:	☐ Approved
Address:	☐ Approved as noted
Contractor:	☐ Not approved
Engineer:	**Remarks:**
Submittal Date:	
Notes 1:	
Notes 2:	

Pipe Covering Protection Saddle

For Nominal Thickness of Covering Shown

☐ Fig. 160: 1"
☑ Fig. 161: 1½"
☐ Fig. 162: 2"
☐ Fig. 163: 2½"
☐ Fig. 164: 3"
☐ Fig. 165: 4"
☐ Fig. 165A: 4" (Alloy)
☐ Fig. 166A: 5½" (Alloy)

Size Range: ¾" through 36"

Material:

- Figs. 160, 161, 162, 163, 164, and 165 are curved carbon steel plate.
- Figs. 165A and 166A are alloy steel manufactured from ASTM A 387 Grade 22 Chrome Molybdenum steel plate.
- Figs. 165A and 166A have a welded-in center plate in all sizes.
- All other saddles have a welded-in center plate for pipe sizes 12" and larger.
- All saddles are 12" long with side edges turned up.

Finish: Plain

Service: Designed for use on insulated high temperature systems where heat losses are to be kept to a minimum and to protect insulation against damage.

Maximum Temperature: 650° F carbon steel, 950° F alloy steel.

Approvals: Complies with Federal Specification A-A-1192A (Type 39A & 39B), *WW-H-171-E (Type 40A & 40B)*, ANSI/MSS SP-69 and MSS SP-58 (Type 39A & 39B).

Features: Permits finished, weather tight covering at all points of pipe support.

Ordering: Specify pipe size, figure number and name. Data for 42" size available on request.

Installation: It is recommended that saddle be welded to the pipe.



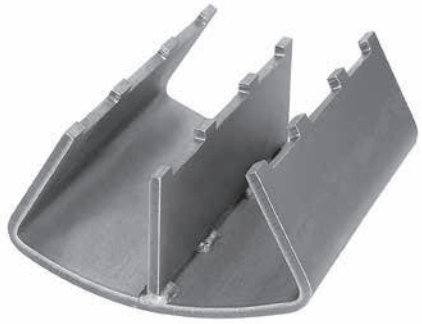

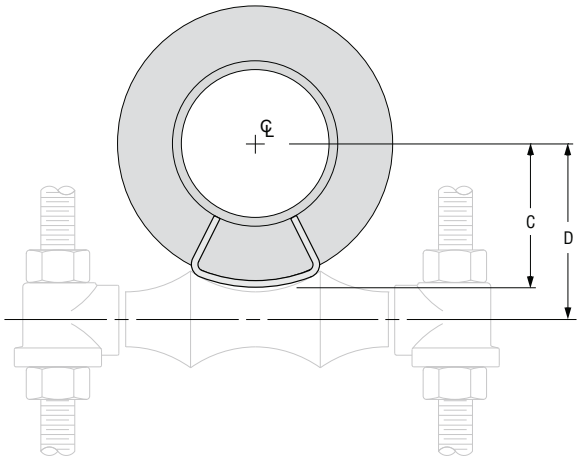

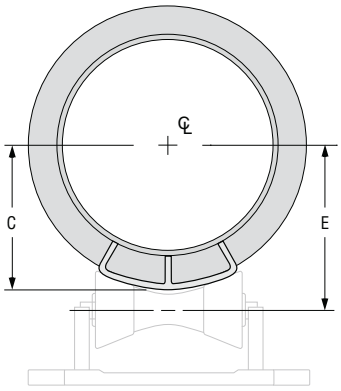

Continued on Following Page.

PROJECT INFORMATION	APPROVAL STAMP
Project:	☐ Approved
Address:	☐ Approved as noted
Contractor:	☐ Not approved
Engineer:	Remarks:
Submittal Date:	
Notes 1:	
Notes 2:	

Fig. 160 to Fig 166A Pipe Covering Protection Saddle (cont.)

FIG. 160, 161, 162, 163, 164, 165, 165A, 166A: DIMENSIONS (IN) • LOADS (LBS) • WEIGHT (LBS)										
Pipe Size	Fig. No.	Max Load ■	Weight	Size of Pipe Roll			Center Line of Pipe to Outside of Saddle C	Center Line of Pipe to Center Line of Roll		
				Figs. 171, 175, 177	Fig. 181	Figs. 271, 274, 277		D		E
								Figs. 171, 175, 177	Fig. 181	Figs. 271, 274, 277
¾	160•	1,200	1.4	2	2½	2-3½	1⅝	2 1/16	2⅛	2¼
	161•		2.1	3	3½		2 3/16	2¾	2¾	2⅞
	162•		2.8	4	5		2 11/16	3 5/16	3 5/16	3⅜
1	160•	1,200	1.4	2½	3	2-3½	1 13/16	2 5/16	2¼	2 7/16
	161•		2.1	3	4		2 5/16	2⅞	2⅞	3
	162•		2.8	4	5		2⅞	3½	3½	3½
1¼	160	1,200	1.4	2½	3	2-3½	1 15/16	2½	2 7/16	2 9/16
	161•		2.1	3½	5		2 9/16	3 1/16	3 1/16	3 3/16
	162•		2.8	4			3	3 5/8	3 5/8	3 11/16
	163•		3.6	5	6	4-6	3¾	4⅜	4⅜	4⅜
1½	160	1,200	1.5	3	3½	2-3½	2⅛	2⅝	2⅝	2 11/16
	161•		2.1	3½	5		2⅝	3¼	3¼	3 5/16
	162•		3.2	5	6	4-6	3 5/16	4	4	3⅞
	163•		3.6	6	8		3⅞	4½	4⅝	4½
2	160	1,200	1.7	3½	4	2-3½	2⅜	3	2 15/16	3 1/16
	161•		2.3	4	5		2⅞	3½	3½	3 9/16
	162•		3.2	5	6	4-6	3 9/16	4¼	4¼	4 3/16
	163•		3.6	6	8		4 1/16	4¾	4 13/16	4¾
	164•		4.5	8			4 9/16	5⅜	5⅜	5¼
2½	160	1,200	1.7	3½	5	2-3½	2 11/16	3¼	3¼	3 5/16
	161		2.8	5	6	4-6	3 5/16	4	4	3 15/16
	162		3.2	6	8		3⅞	4½	4⅝	4½
	163		4.1	8			4¼	5⅛	5⅛	5
	164		4.5		10		4⅞	5⅝	5¾	5½
3	160	1,200	1.9	4	5	2-3½	2 15/16	3½	3½	3 9/16
	161		2.8	5	6	4-6	3⅝	4 5/16	4 5/16	4¼
	162		3.6	6	8		4⅛	4 13/16	4 13/16	4 11/16
	163		4.1	8			4 11/16	5 7/16	5 7/16	5 5/16
	164		4.9		10	8-10	5 1/16	6	6	6 1/16
3½	160	1,200	2.3	5	6	4-6	3 5/16	4	4	3 15/16
	161		3.2	6	8		3 11/16	4 9/16	4 9/16	4½
	162		3.6	8			4 5/16	5⅛	5⅛	5
	163		4.5		10	8-10	4 11/16	5⅝	5⅝	5 11/16
	164		4.9	10			5⅜	6 5/16	6 5/16	6⅜
4	160	1,200	2.3	5	6	4-6	3 9/16	4¼	4¼	4 3/16
	161		3.2	6	8		4 1/16	4⅞	4⅞	4¾
	162		3.6	8			4 9/16	5⅜	5⅜	5¼
	163		4.5		10	8-10	5	5 15/16	5 15/16	6
	164		4.9	10			5⅝	6 9/16	6 9/16	6⅝
	165		6.1		12	12-14	6½	7⅝	7⅝	7 9/16
	165A	7,200	11.6							
	166A		15.7	14	16		8⅛	9⅝	9½	9 5/16

■ Maximum recommended loads are applicable only when saddle is used on a flat bearing surface or roller hangers and tack welded to pipe. When saddle is used with a pipe roll, the maximum load for the assembly is the smaller of the two loads.

• Saddles may require notching when used with a U-bolt.

Continued on Following Page.

REVIEWED by MV

Fig. 261 (Formerly Afcon Fig. 400) Extension Pipe or Riser Clamp

Size Range: 3/4" through 24"
Material: Carbon steel
Finish: ☐ Plain, ☐ Hot-Dip Galvanized with Zinc Plated Bolts & Nuts, ☑ Epoxy Coated or ☐ Painted.
Service: For support of stationary steel pipe risers, cast iron pipe or conduit. This product is not intended for use with hanger rods. For this application refer to Fig. 40 Riser Clamp, page 49.
Maximum Temperature: Plain 650° F, Galvanized and Epoxy 450° F
Approvals: Complies with Federal Specification A-A-1192A (Type 8) *WW-H-171-E (Type 8)*, ANSI/MSS SP-69 and MSS SP-58 (Type 8). UL, ULC Listed (Sizes 1 1/2" - 8").
Installation: Clamp is fitted and bolted preferably below a coupling, hub or welded lugs on steel pipe. Bolt torques should be per industry standards (see page 248). Clamp is designed for standard steel pipe O.D. and this must be considered in sizing the riser for other types of piping.
Ordering: Specify pipe size, figure number, name and finish.



Note: Refer to Technical Data Section of the Pipe Hanger Catalog for cast iron soil pipe data.

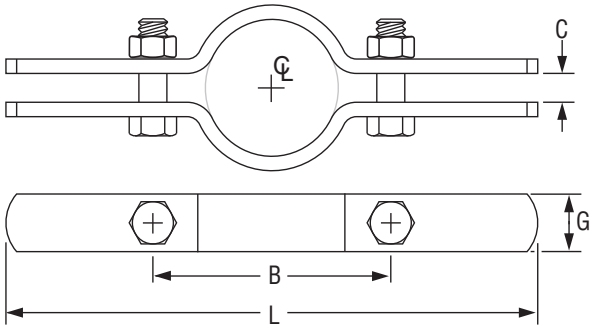

FIG. 261: DIMENSIONS (IN) • LOADS (LBS) • TORQUE (FT-LBS) • WEIGHT (LBS)

Pipe Size	Max Load	Weight	L	G Width	B	C	Bolt Diameter	Torque Values
3/4	220	1.1	8 7/8	1	2 7/8	3/8	3/8	21
1		1.1			3 1/8			
1 1/4	250	1.6	10		3 1/2			
1 1/2		1.6	10 1/4		3 7/8			
2	300	1.7			4 1/4	1/2	7/16	32
2 1/2	400	1.9	11 1/4		4 3/4			
3	500	1.9	11 3/8		5 1/2			
3 1/2	600	2.3	12 7/8		6 1/2	1/2	1/2	46
4	750	2.4			7			
5	1,500	3.6	13 3/4	1 1/2	8			
6	1,600	4.0	14 3/4		9			
8	2,500	7.6	18 1/2		12	5/8	5/8	100
10		11.1	20 1/4	2	13 3/4			
12	2,700	16.5	22 3/4		15 3/4			
14		17.7	24		17 1/4			
16	2,900	30.4	26	2 1/2	19 3/4	3/4	3/4	150
18		33.8	28		21 3/4			
20		35.0	30		23 3/4			
24	3,200	82.0	36 3/4	3	30	1	7/8	190

PROJECT INFORMATION	APPROVAL STAMP
Project:	☐ Approved
Address:	☐ Approved as noted
Contractor:	☐ Not approved
Engineer:	**Remarks:**
Submittal Date:	
Notes 1:	
Notes 2:	

REVIEWED by MV

Fig. 94

Wide Throat Top Beam C-Clamp

Size Range: 5/8" and 3/4"
Material: Ductile iron body, hardened steel cup point set screw and locknut.
Finish: ☐ Plain or ☑ Zinc Plated (Hot-Dip Galvanized optional)
Service: Recommended for use under roof installations with bar joist type construction, or for attachment to the top flange of structural shapes where the vertical hanger rod is required to be offset from the edge of the flange and where the thickness of joists or flange does not exceed 1 5/16".
Approvals: Complies with Federal Specification A-A-1192A (Type 19) *WW-H-171-E (Type 19)*, ANSI/MSS SP-69 and MSS SP-58 (Type 19), UL Listed.
How to size: Size of clamp is determined by size of rod to be used.
Installation: Follow maximum recommended set screw torque values per MSS-SP-69.
Features:

- Provides clamping to bar joists which are directly under roof installations.
- Provides for vertical hanger rod installed offset from the edge of the beam flange.
- Malleable iron body assures full thread engagement of rod.

Ordering: Specify rod size, figure number, name of clamp and finish.

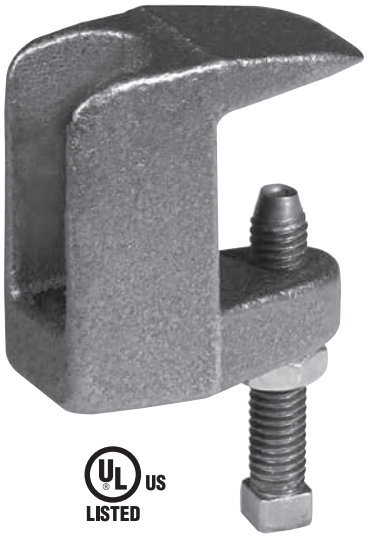

UL US LISTED

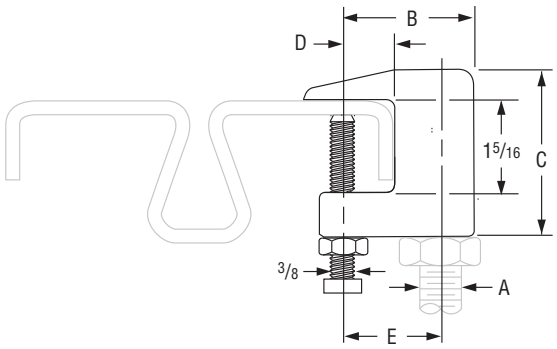

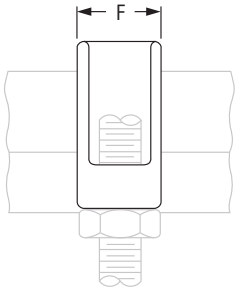

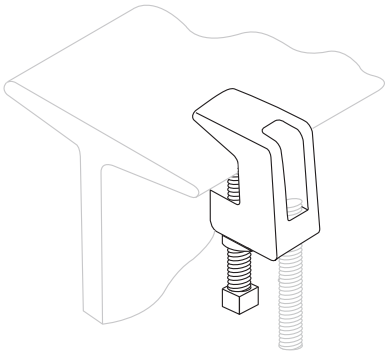

FIG. 94: DIMENSIONS (IN) • LOAD (LBS) • TORQUE (IN-LBS) • WEIGHT (LBS)									
Rod Size A	Set Screw Size	Torque Value	Max Loads ■	Weight	B	C	D	E	F
5/8	3/8	60	1,200	0.66	1 3/4	2 1/4	3/4	1 1/4	1
3/4	3/8	60	1,600	0.83	1 7/8	2 3/8		1 3/8	1 3/16

■ Maximum temperature of 450° F

PROJECT INFORMATION	APPROVAL STAMP
Project:	☐ Approved
Address:	☐ Approved as noted
Contractor:	☐ Not approved
Engineer:	**Remarks:**
Submittal Date:	
Notes 1:	
Notes 2:	

33

REVIEWED BY CONTRACTOR

Kudlik Construction Ltd.

NAME: Sandra Rousseau P.Eng

DATE: Oct 04, 2018

Mécanique Nordique
Plumbing
Heating
Ventillation
mecanique.nordique@hotmail.com

1255 Rue J.A.Bombardier
Lévis, Québec
G7A 2P4
Téléphone: 418-496-1109
Télécopieur: 418-496-3803

IQALUIT WWTP UPGRADE

DRAWING FOR APPROVAL

Ingineer : NUNAMI STANTEC

DRAWING #: AD-033R2

Section 23 05 49
Article 1.4 , 1.5 PART 2
Plans ALL
Application : SEISMIC
Brand :
Model :
Revised # :
Supplyer : GESTION SISMIQUE INC

Pages incl. 29
Date : **2018-08-29**
By : **Mécanique Nordique Inc.**

STANTEC PROJECT #: 110126045

SUBMITTAL # AD-033R2

This review by Stantec is for general conformance with the design concept of Stantec's design of the:
☐ Architectural ☐ Electrical
☐ Structural ☐ Other
☑ Mechanical

Stantec

component(s) only and does not mean that Stantec has verified or approves the shop drawing(s). The Contractor remains solely responsible for the shop drawing(s) and this review by Stantec does not relieve the Contractor of the Contractor's responsibility for errors or omissions in the shop drawing(s) or for meeting all requirements of the contract documents. This review does not mean that Stantec approves the detailed design inherent in the shop drawing, responsibility for which shall remain with the Contractor submitting same, nor does this review mean that Stantec accepts any deviation of the shop drawing(s) from the contract documents. The Contractor is responsible for confirming all dimensions and correlating them at the job site, for all construction means, methods and techniques, and for coordination of construction work of all trades, including coordination of all shop drawings.

☑ REVIEWED
☐ REVIEWED, AS NOTED
☐ REVISE AND RESUBMIT
☐ NOT REVIEWED

DATE 2018-10-10

BY Brendan Zrum, P.Eng

SEISMIC RESTRAINT GUIDELINE

***Issued by*:** Gestion Sismique Inc.
***Delivered to*:** Mécanique Nordique Inc.
***Project*:** IQALUIT WASTE WATER TREATMENT
***Discipline*:** Plumbing, Heating and HVAC
***Project address*:** Fremont Street**,** Iqaluit, Nunavut, Canada
Document number : D-0342
Registry :

DATE	Revision	Description
2018-07-25		For Approbation
2018-08-08	1	
2018-08-29	2	

This document was prepared and approved by:

PERMIT TO PRACTICE
GESTION SISMIQUE INC.
Signature
Date 2018-08-29
PERMIT NUMBER: P 1295
NT/NU Association of Professional Engineers and Geoscientists

REGISTERED PROFESSIONAL ENGINEER
Q.H. BUI
LICENSEE
NT/NU
August 28, 2018

Quang Hien Bui, Ing

PART 1: HEATING AND PLUMBING SUSPENDED PIPING

GENERAL NOTES FOR SUSPENDED PIPING

1- For individual supports, seismic restraints are required if the distance between the top of the pipe and it's attachment to the structure measures 12'' or more.

2- For suspended trapezes, seismic restraints are required if the length of the threaded rods measures 12'' or more.

3- Outside of a mechanical room, seismic restraints are required for pipes with a diameter of 2 ½'' or more.

4- Inside of a mechanical room, seismic restraints are required for pipes with a diameter of 1 ¼'' or more.

5- For natural gas, compressed air, medical gases and all other dangerous, explosive, flammable or life safety components, Seismic restraints are required regardless of the pipes diameter.

6- Each straight run with 2 or more supports requires a minimum of 2 transversal restraints and 1 longitudinal restraint.

7- The position, spacing and methods for seismic restraints have to be decided by Gestion Sismique Inc. engineers only.

8- Once decided, seismic restraints must always be installed on or next to an existing support with a threaded rod in place at maximum 4'' allowing a rod stiffener to be efficient.

9- There are flexible restraints and rigid restraints. It is forbidden to mix both of them on the same straight run.

10- For a system, it is forbidden to have restraints on two different part of a building, like anchoring to a wall and a ceiling.

RECOMMENDED SEISMIC ANCHORS FOR THREADED RODS

KWIK HUS-EZ I (KH-EZ I) Carbon Steel Screw Anchor 3.3.7

3.3.7.1 Product description

KWIK HUS-EZ I (KH-EZ I) anchors are comprised of a body with an internally threaded hex washer head. The anchor is manufactured from carbon steel and is heat treated. It has a minimum 0.0003 inch (8 µm) zinc coating in accordance with DIN EN ISO 4042. The internally threaded head is larger than the diameter of the anchor and is formed with serrations on the underside. The anchor body is formed with threads running most of the length of the anchor body. The anchor is installed in a predrilled hole with a powered impact wrench or torque wrench. The anchor threads cut into the concrete on the sides of the hole and interlock with the base material during installation. Applicable base materials include normal-weight concrete, structural lightweight concrete and lightweight concrete over metal deck.

Guide specifications

Screw anchors shall be KWIK HUS-EZ I as supplied by Hilti, Inc. Anchors shall be manufactured from heat treated carbon steel material, zinc plated to a minimum thickness of 8 µm. Anchors shall be installed using a drill bit of same nominal diameter as anchor.

Product features

- Suitable for cracked and uncracked normal-weight and lightweight concrete, and lightweight concrete over metal deck.
- Suitable for seismic and nonseismic loads.
- Quick and easy to install
- Thread design enables quality setting and exceptional load values in wide variety of base material strengths.
- Anchor is fully removable
- Anchor size is same as drill bit size.
- Suitable for reduced edge distances and spacing.

3.3.7.2 Material specifications

KWIK HUS-EZ I anchors are manufactured from carbon steel. The anchors are bright zinc plated to a minimum thickness of 8 µm.

3.3.7.3 Technical data

3.3.7.3.1 ACI 318-14 Chapter 17 design

The technical data contained in this section are Hilti Simplified Design Tables. The load values were developed using the design parameters and variables of ESR 3027 and the equations of ACI 318-14 Chapter 17. For a detailed explanation of the Hilti Simplified Design Tables, refer to section 3.1.8. Data tables from ESR 3027 are not contained in this section, but can be found at www.icc-es.org or at www.hilti.com.

3.3.7.1 Product description
3.3.7.2 Material specifications
3.3.7.3 Technical data
3.3.7.4 Installation instructions
3.3.7.5 Design guidelines
3.3.7.6 Ordering information



3.3.7

Listings/Approvals

ICC-ES (International Code Council)
ESR-3027
City of Los Angeles
Research Report No. 25897
FM (Factory Mutual)
Pipe Hanger Components for Automatic Sprinkler Systems for 3/8 internal threaded diameter anchor

Independent code evaluation

IBC® / IRC® 2015
IBC® / IRC® 2012
IBC® / IRC® 2009
IBC® / IRC® 2006

PART 2: SUSPENDED HVAC DUCTS

GENERAL NOTES FOR SUSPENDED HVAC DUCTS

1- For suspended trapezes with hvac ducts, seismic restraints are required if the length of the threaded rods measures 12'' or more.

2- Seismic restraints are required on rectangular ducts with 6 square feet or more of diameter.

3- Seismic restraints are required on circular ducts with 28 inches or more of diameter.

4- Chimneys and systems with hazardous or toxic gas, needs to be restrained regardless of its diameter.

5- When installing restraints on hvac ducts, the duct needs to be squeezed with a support over and under the duct and the supports needs to be secured with metal screws every 12 inches.

6- Each straight run with 2 or more supports requires a minimum of 2 transversal restraints and 1 longitudinal restraint.

7- The position, spacing and methods for seismic restraints have to be decided by Gestion Sismique Inc. engineers only.

8- Once decided, seismic restraints must always be installed on or next to an existing support with a threaded rod in place at maximum 4'' allowing a rod stiffener to be efficient.

9- There are flexible restraints and rigid restraints. It is forbidden to mix both of them on the same straight run.

10- For a system, it is forbidden to have restraints on two different part of a building, like anchoring to a wall and a ceiling.

PART 3: SUSPENDED AND GROUND UNITS

1. Earthquake data

City:	***IQALUIT, Nunavut***
Latitude, Longitude	***63.748041, -68.506128***
Risk Category:	***post-disaster***
Geotechnical Site Class:	***B***
Importance factor, IE:	***1,5***
Design spectral response acceleration, Sa(0.2):	***0,087***
Acceleration-based site coefficient, Fa:	***0,8***

2. Oil Tank (25000 L)

A) Coefficient of the Lateral Seismic Force (CLS) and Seismic Force:

- Coefficient of the Lateral Seismic Force (CLS):

Equipment:	***Oil Tank***
Mass (pound):	***64665***
Location	***Exterior***
Equipment:	***Standard***
Element or Component Category:	***11B***
Element or Component Seismic Coefficient, Cp:	***1***
Response Amplification Factor, Ar:	***2,5***
Height Coefficient, Ax:	***1***
Element or Component Response Modification Coefficient, Rp:	***2,5***
Modification Factor, Sp:	***1***
Coefficient of the Lateral Seismic Force (CLS):	***0,031***

- Seismic Force:
Lateral Seismic Force = CLS* mass = **3376** pound

- Lateral Seismic Force per support point (4 support points):
Tensile force = **0** pound
Shear force = **844** pound

B) Anchorages

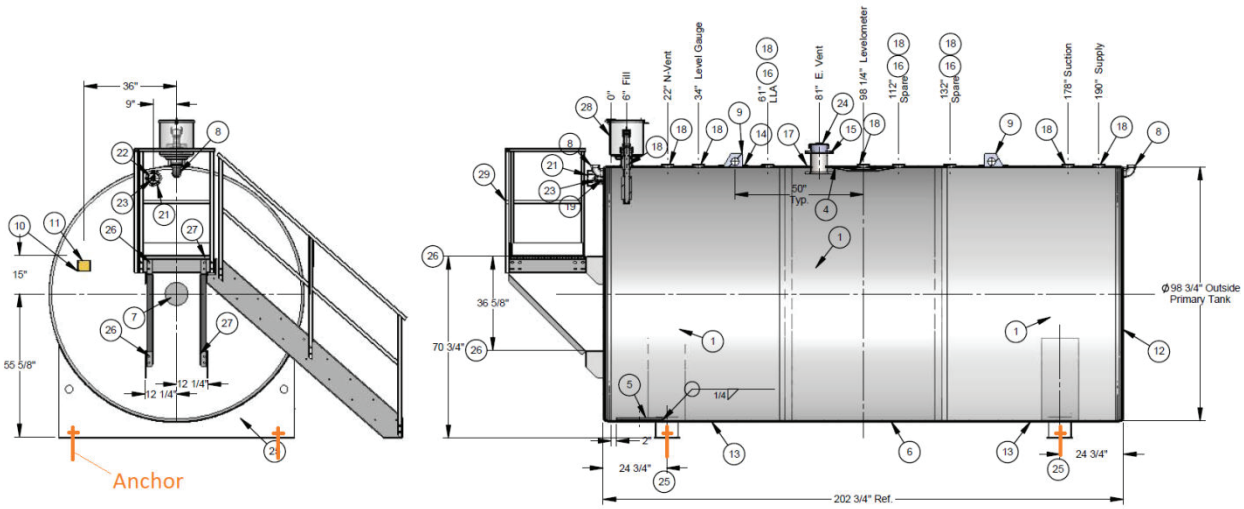

CONCLUSION :

4 seismic anchors of 3/4'' diameter x 6'' embedment.
Minimum thickness of floor: 8''
Minimum edge distance: 6''

3. Pumps P-1.1 and P-1.2 (165 pound); P-1.3 and P-1.4 (142 pound);

A) Coefficient of the Lateral Seismic Force (CLS) and Seismic Force:

- Coefficient of the Lateral Seismic Force (CLS):

Equipment: ***Pump P-1.1 (165lbs)***
Mass (pound): ***165***
Location: ***Mechanical room***

Equipment: ***Standard***
Element or Component Category: ***11B***
Element or Component Seismic Coefficient, Cp: ***1***
Response Amplification Factor, Ar: ***2,5***
Height Coefficient, Ax: ***3***
Element or Component Response Modification Coefficient, Rp: ***2,5***
Modification Factor, Sp: ***3***
Coefficient of the Lateral Seismic Force (CLS): ***0,094***

- Seismic Force:

Lateral Seismic Force = CLS* mass = = **15.51** pound

B) Suspension system

The pumps need to be attached to the steel service platform:

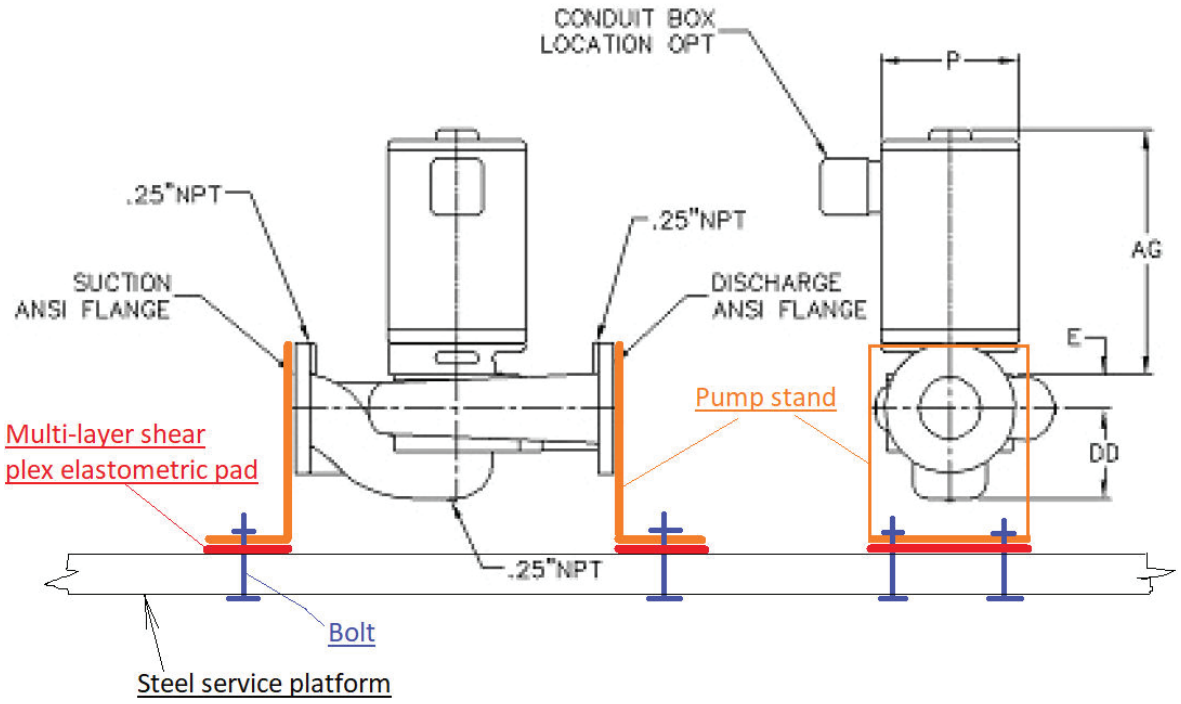

Bolt ASTM A307 of 3/8'' diameter
- Pump Stand:

LES PRODUITS SISMIQUES

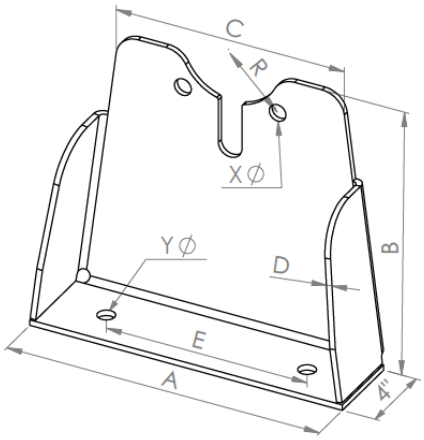

Modèle		A	B	C	D	E	X	Y	R
SPS-1.5	1.5 inch	14	12	10 1/4	1/4	9	5/8	3/4	1 15/16
SPS-2	2 inch	14	12	10 1/4	1/4	9	3/4	3/4	2 3/8
SPS-2.5	2.5 inch	14	12	10 1/4	1/4	9	3/4	3/4	2 3/4
SPS-3	3 inch	14	12	10 1/4	1/4	9	3/4	3/4	3
SPS-4	4 inch	18	15	15 9/16	3/8	12	3/4	7/8	3 3/4
SPS-5	5 inch	18	15	15 9/16	3/8	12	7/8	7/8	4 1/4
SPS-6	6 inch	18	15	15 9/16	3/8	12	7/8	7/8	4 3/4
SPS-8	8 inch	18	15	15 9/16	3/8	12	7/8	7/8	5 7/8

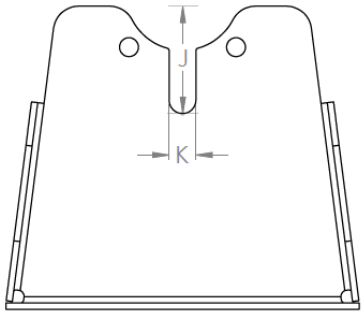

	J	K
1.5 inch	2.94	0.94
2 inch	3.50	1.06
2.5 inch	4	1.06
3 inch	4.25	1.06
4 inch	5	1.06
5 inch	5.56	1.19
6 inch	6.06	1.19
8 inch	7.31	1.19

4. Domestic water heaters (DHWH-1)

A) Coefficient of the Lateral Seismic Force (CLS) and Seismic Force:
- Coefficient of the Lateral Seismic Force (CLS):

Equipment: ***DHWT-1***
Mass (pound): ***1358***
Location: ***Mechanical room***

Equipment: ***Standard***
Element or Component Category: ***11B***
Element or Component Seismic Coefficient, Cp: ***1***
Response Amplification Factor, Ar: ***2,5***
Height Coefficient, Ax: ***1***
Element or Component Response Modification Coefficient, Rp: ***2,5***
Modification Factor, Sp: ***1***
Coefficient of the Lateral Seismic Force (CLS): ***0,031***

- Seismic Force:
Lateral Seismic Force = CLS* mass = **42.1** pound
B) Anchorages

DHWH-1 is to be installed on an existing concrete floor.

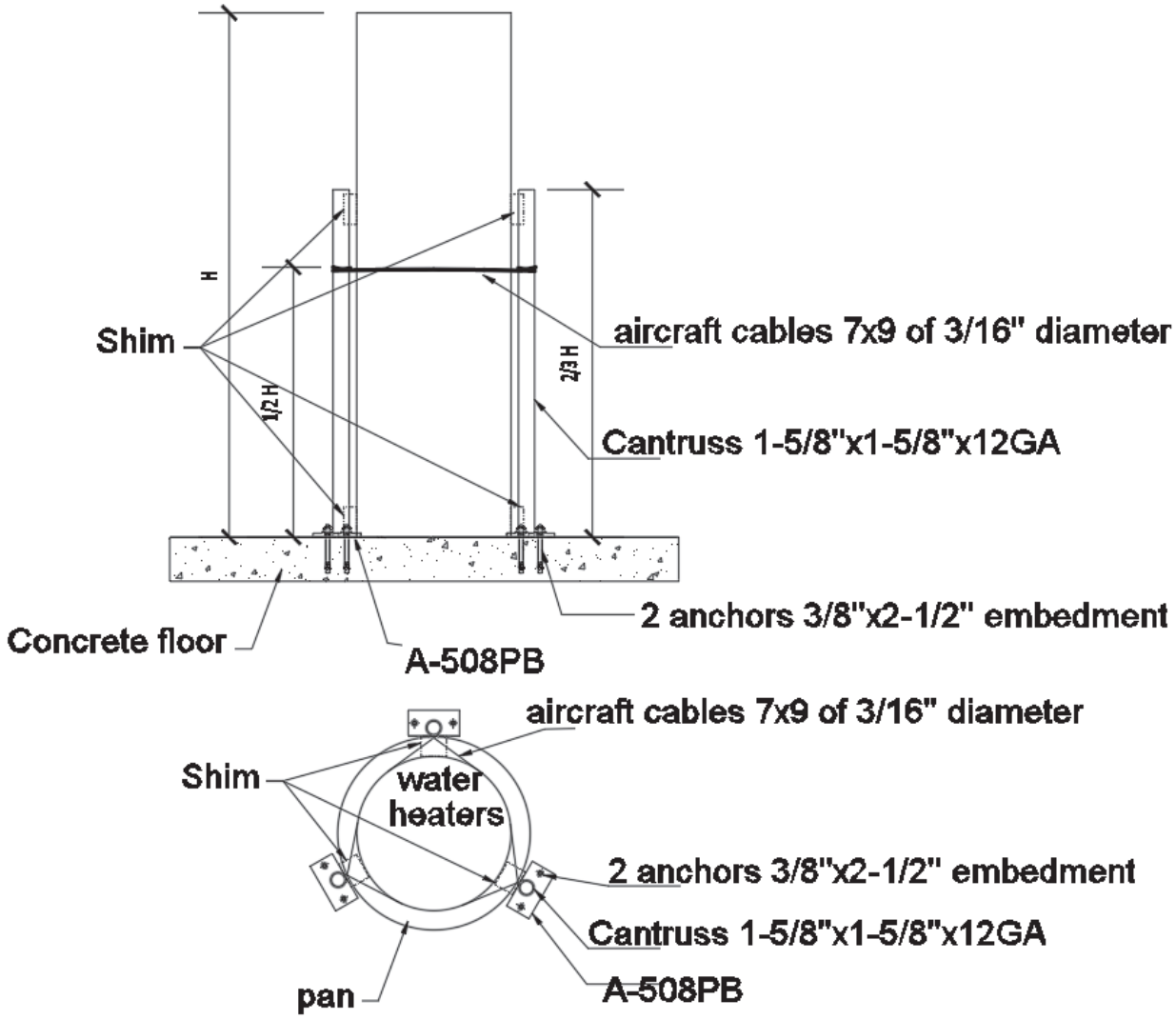

AIMCO INTERNATIONAL GROUP

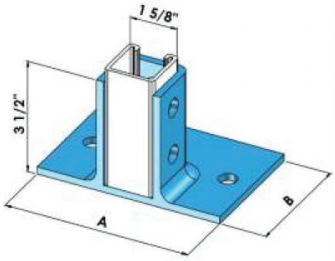

SINGLE POST BASE OPEN

Part #	A (in.)	B (in.)	Approx. Wt. (lbs.)
A-508PB	6	4	3.00
A-PB200	8	3	3.10

Specification Data	
Hole Dia. (in.)	9/16
Hole Spacing from End (in.)	13/16
Hole Spacing on Center (in.)	1 7/8
Width (in.)	1 5/8
Thickness (in.)	1/4

Shim refers to Strut channels made from 1-5/8 "X 1-5/8" X 12 GA sections that act as a blocker between the water heater and the steel pipe. The shim must be screwed to the steel pipes by a minimum of 2 metal screws of 1/4'' diameter.

5. Expansion Tanks TK-1.1 et TK-1.2 (135 pound)

A) Coefficient of the Lateral Seismic Force (CLS) and Seismic Force:

Equipment: ***Expansion tank***
Mass (pound): ***419***
Location: ***Mechanical room***

Equipment: ***Standard***
Element or Component Category: ***11B***
Element or Component Seismic Coefficient, Cp: ***1***
Response Amplification Factor, Ar: ***2,5***
Height Coefficient, Ax: ***1***
Element or Component Response Modification Coefficient, Rp: ***2,5***
Modification Factor, Sp: ***1***
Coefficient of the Lateral Seismic Force (CLS): ***0,031***

- Seismic Force:
Lateral Seismic Force = CLS* mass = **13** pound

B) Anchorages

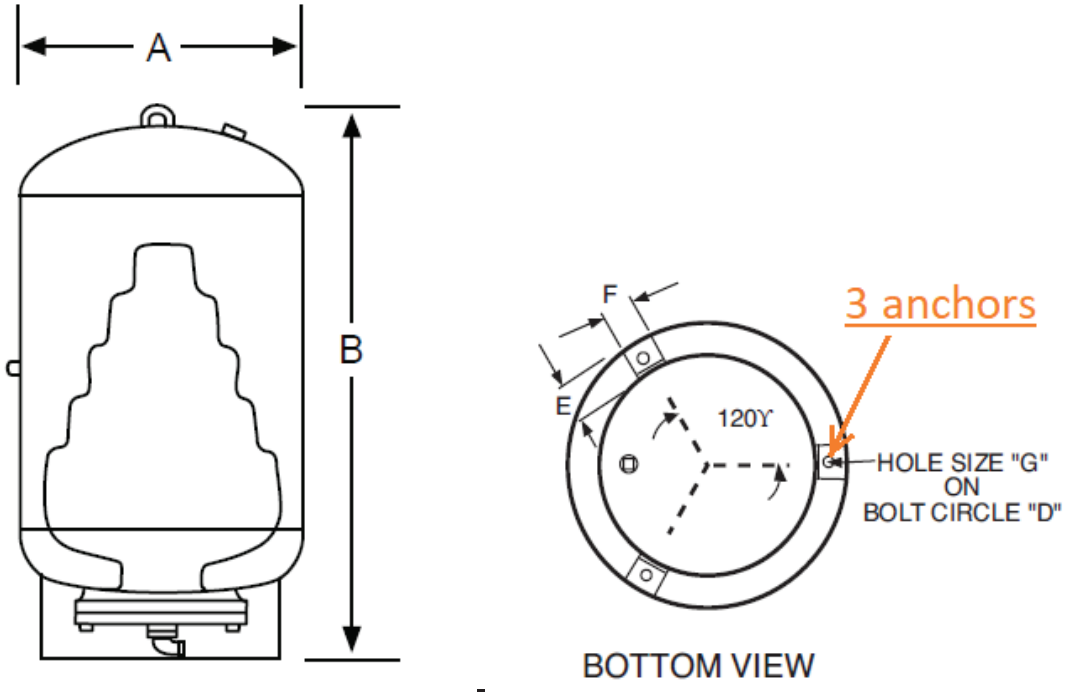

CONCLUSION:

3 seismic anchors of 3/8'' diameter X 2-1/2'' embedment.
Minimum thickness of floor: 4''
Minimum edge distance: 4''

6. Heating Boiler B.1 and B.2 (5074 pound)

A) Coefficient of the Lateral Seismic Force (CLS) and Seismic Force:

Equipment: ***Heating Boiler***
Mass (pound): ***5074***
Location: ***Mechanical room***

Equipment: ***Standard***
Element or Component Category: ***11B***
Element or Component Seismic Coefficient, Cp: ***1***
Response Amplification Factor, Ar: ***2,5***
Height Coefficient, Ax: ***1***
Element or Component Response Modification Coefficient, Rp: ***2,5***
Modification Factor, Sp: ***1***
Coefficient of the Lateral Seismic Force (CLS): ***0.031***

- Seismic Force:
Lateral Seismic Force = CLS* mass = **265** pound
- Lateral Seismic Force per support point (4 support points):
Tensile force = **0** pound
Shear force = **66** pound

B) Anchorages

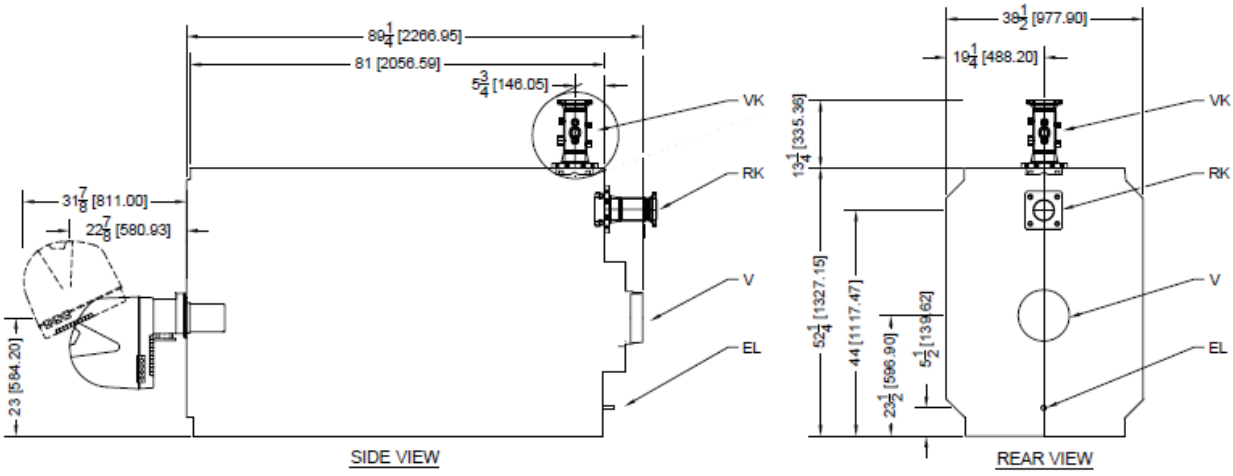

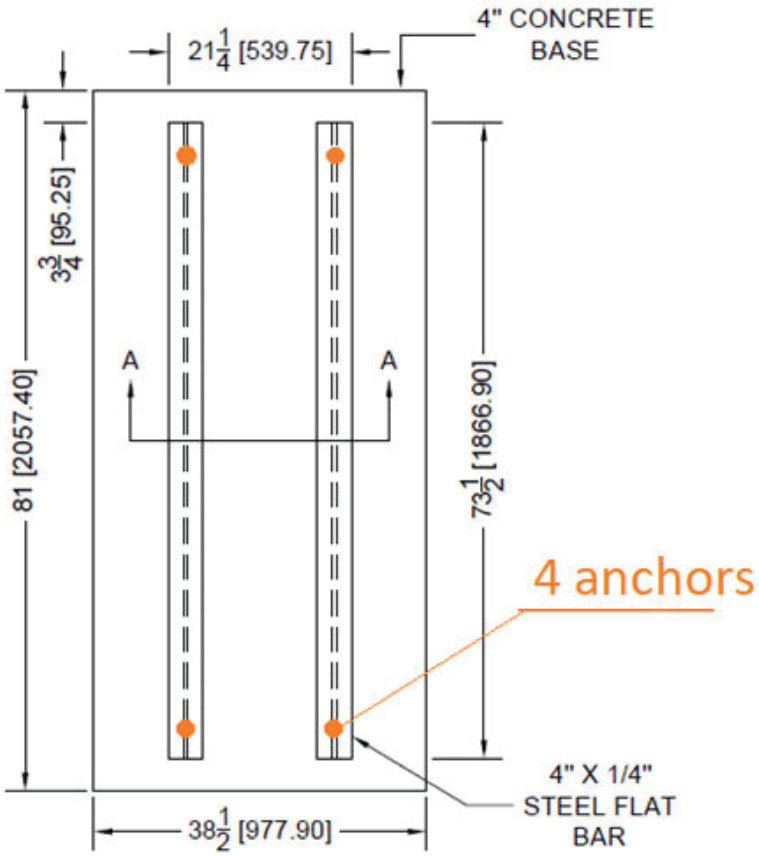

IMPORTANT: BUDERUS REQUEST A FLAT SURFACE FOR THE BOILER ASSEMBLY



VIEW A-A

FLAT BAR INSTALLATION FOR FIELD ASSEMBLY ON AN EXISTING CONCRETE BASE

CONCLUSION :

4 seismic anchors of 1/2'' diameter X 2-1/2'' embedment.
Minimum thickness of floor: 4''
Minimum edge distance: 4''

7. Air handling unit AHU-2

A) Coefficient of the Lateral Seismic Force (CLS) and Seismic Force:

Equipment: ***AHU-2***
Mass (pound): ***7370***
Location: ***Upper floor***

Equipment: ***Standard***
Element or Component Category: ***11B***
Element or Component Seismic Coefficient, Cp: ***1***
Response Amplification Factor, Ar: ***2,5***
Height Coefficient, Ax: ***2***
Element or Component Response Modification Coefficient, Rp: ***2,5***
Modification Factor, Sp: ***2***
Coefficient of the Lateral Seismic Force (CLS): ***0,063***

- Seismic Force:
Lateral Seismic Force = CLS* mass = **462** pound
- Lateral Seismic Force per support point (8 support points):
Tensile force = **0** pound
Shear force = **57** pound

B) Anchorages

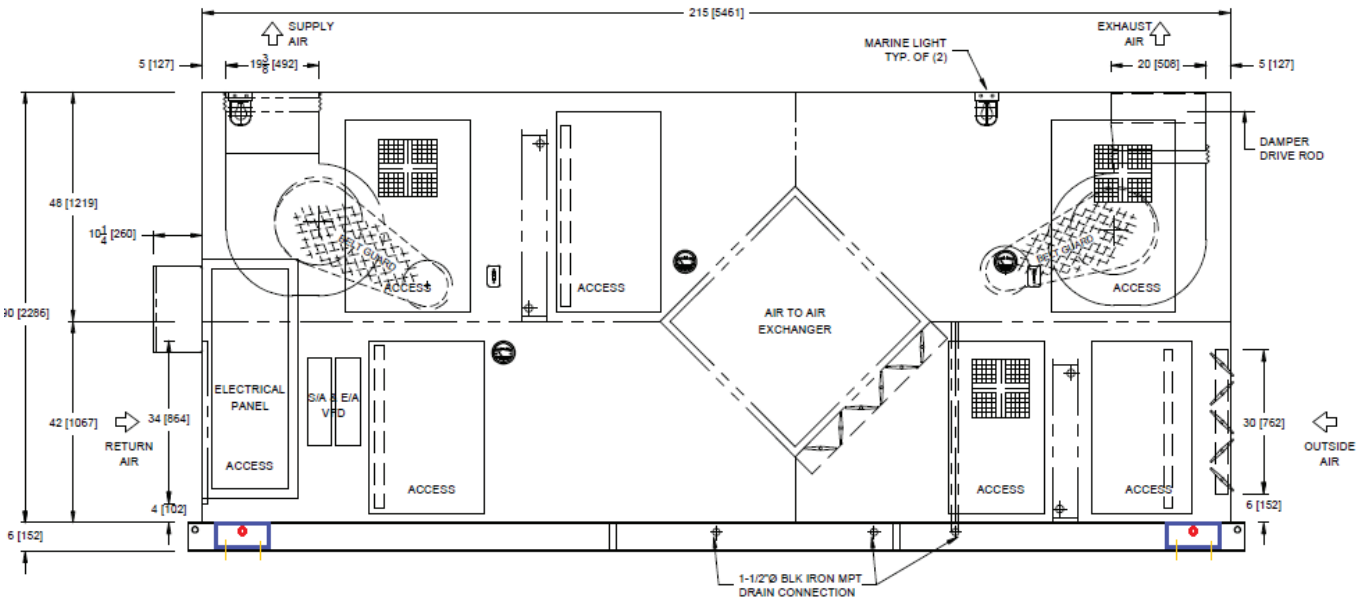

Elevation

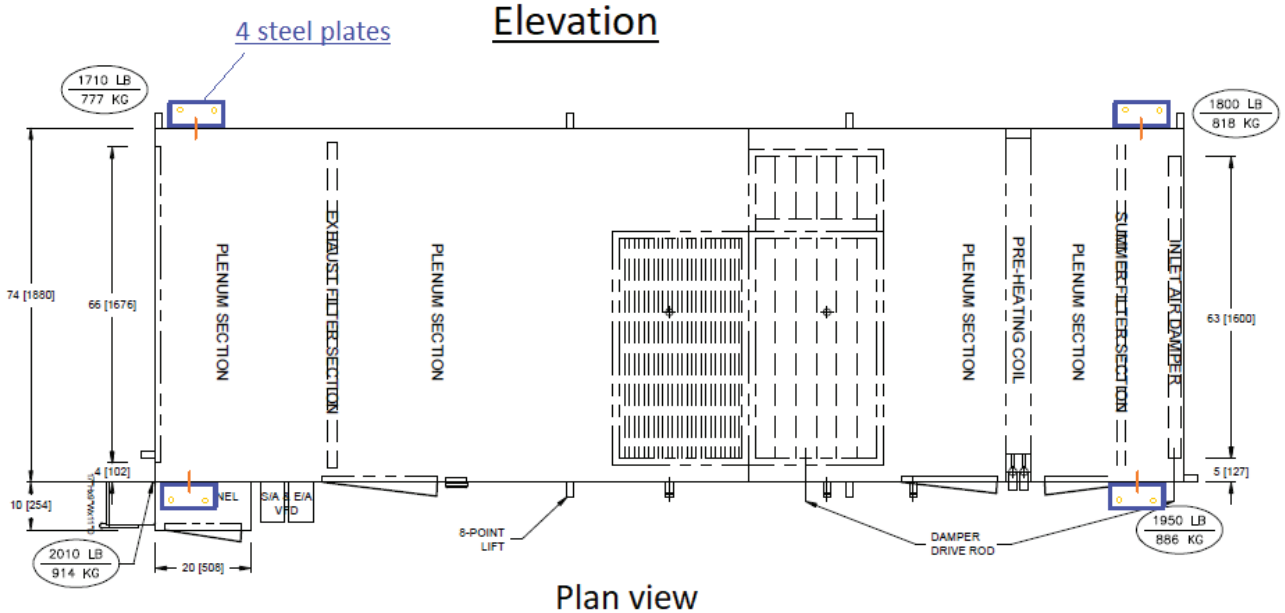

Plan view

- The AHU2 is to be installed on an existing steel structure.

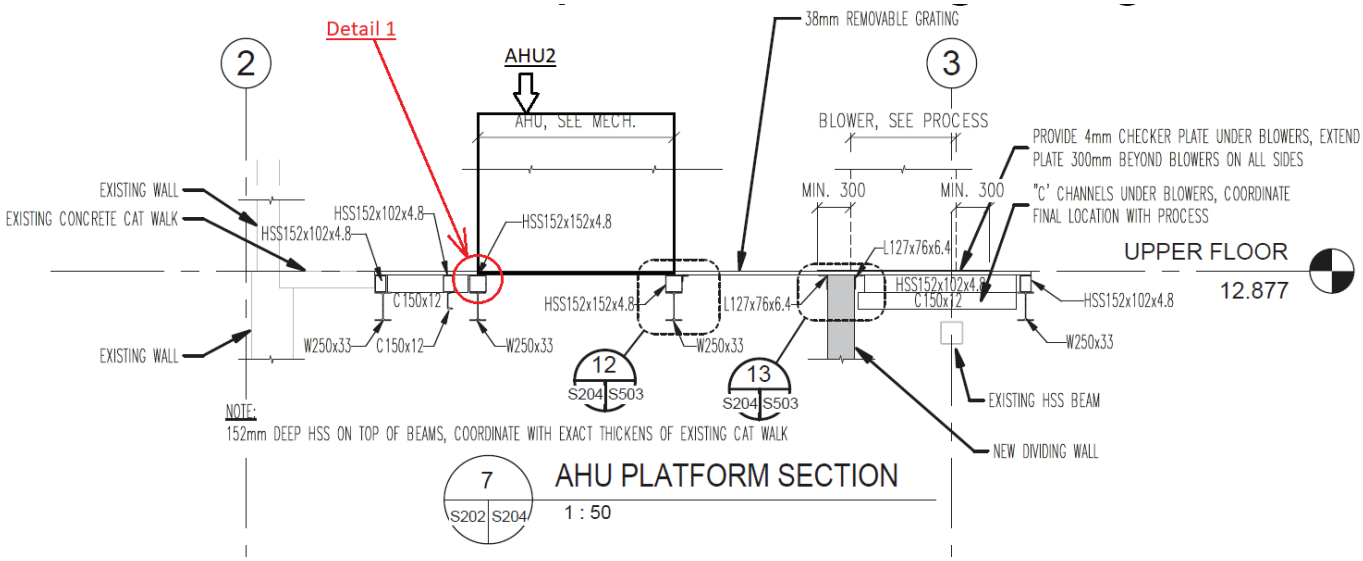

- Detail 1:

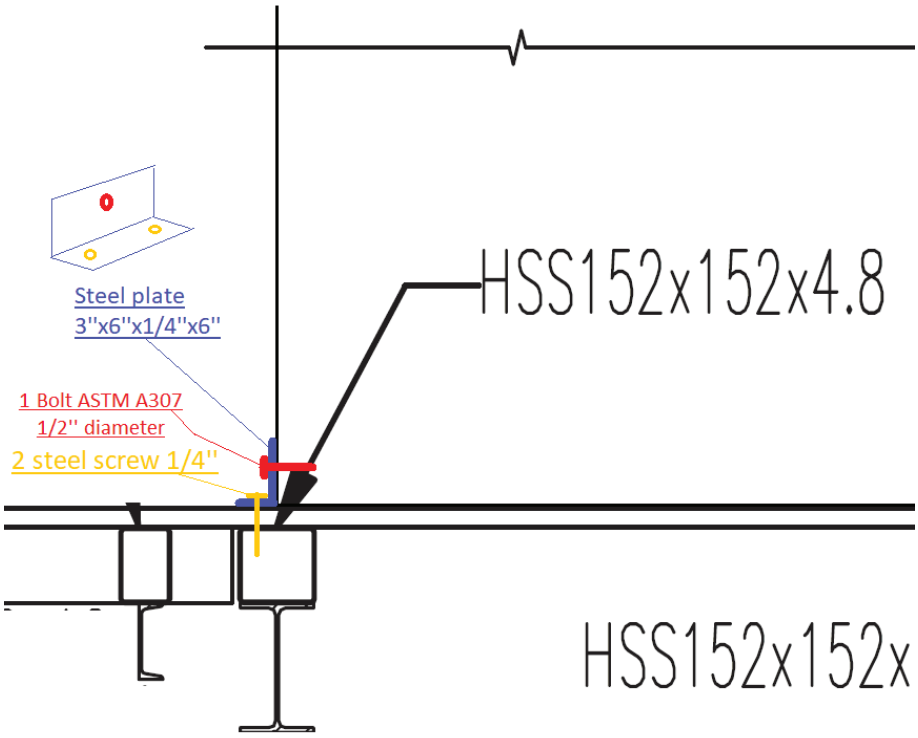

8. Fans CF-1 et CF-2; CFS=0.211; Maximum mass: 79 pound

Suspension system:
The fans need to be attached to the steel structure:
+ 4 threaded rods 3/8'' with rod stiffeners
+ 4 aircraft cables in 45 degrees 7x19 of 1/8'' diameter

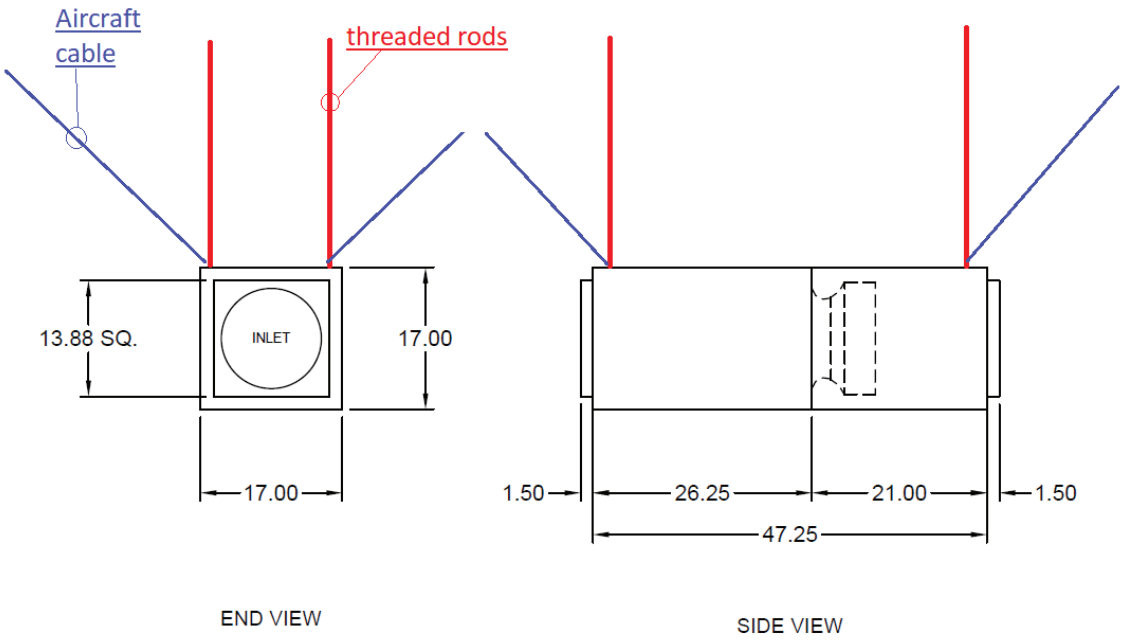

9. Heat recovery ventilator HRV-1; CLS=0.094; maximum mass: 65 pound
Seismic installation is not required. Follow the manufacturer's recommendations for installation.

10. Oil pumps P-4.1 and P-4.2; CLS=0.094; maximum mass: 100 pound (to be confirmed by contractor)
Secure the pump to the wall (in the metal studs) with 4 metal screws of 1/4'' diameter.

11. Brazed plate heat exchanger HEX-3.1 and HEX-3.2; CLS=0.094; maximum mass: 42 pound
Seismic installation is not required. Follow the manufacturer's recommendations for installation.

12. Tank of HVAC water treament systems; CLS=0.094; maximum mass: 460 pound

Diameter: 24'' ; Hight: 49'' ; Capacity: 208 Liters

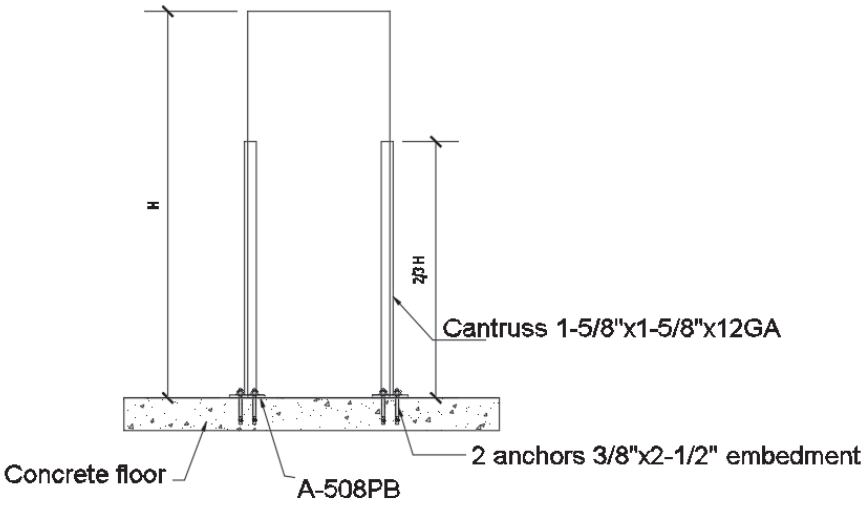



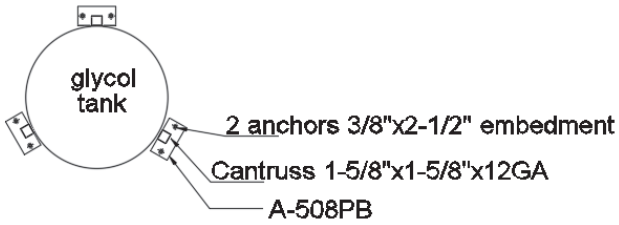

AIMCO INTERNATIONAL GROUP

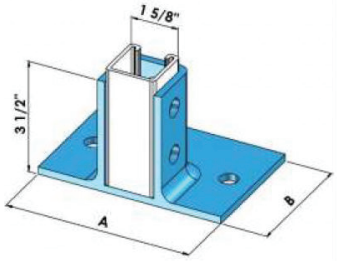

SINGLE POST BASE OPEN

Part #	A (in.)	B (in.)	Approx. Wt. (lbs.)
A-508PB	6	4	3.00
A-PB200	8	3	3.10

Specification Data	
Hole Dia. (in.)	9/16
Hole Spacing from End (in.)	13/16
Hole Spacing on Center (in.)	1 7/8
Width (in.)	1 5/8
Thickness (in.)	1/4

13. Suspended air seperator; CLS=0.094; maximum mass: 121 pound

Suspension system:

The unit needs to be attached to the steel structure:
+ 2 threaded rods 3/8'' with rod stiffeners
+ 4 aircraft cables in 45 degrees 7x19 of 1/8'' diameter

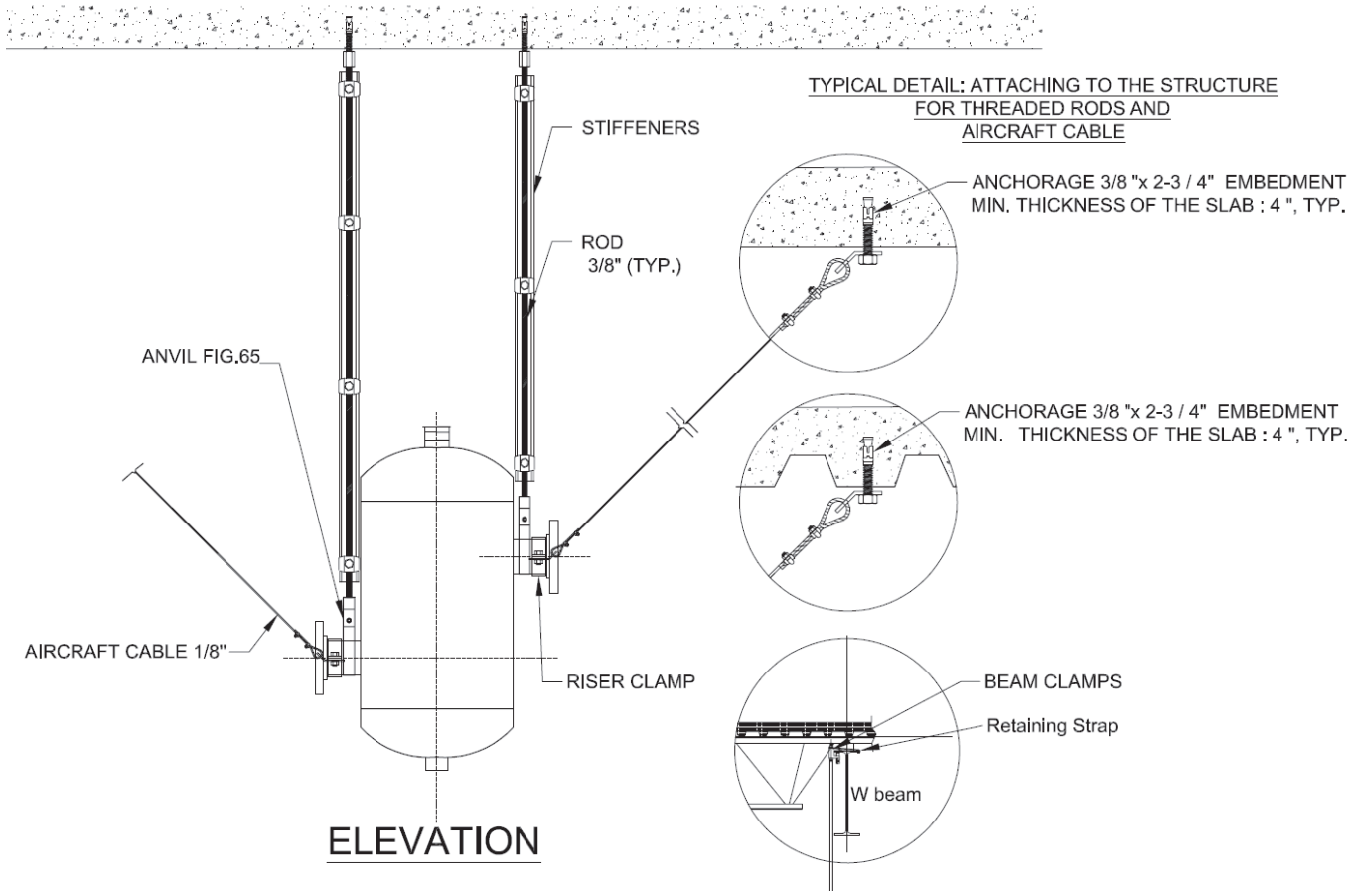

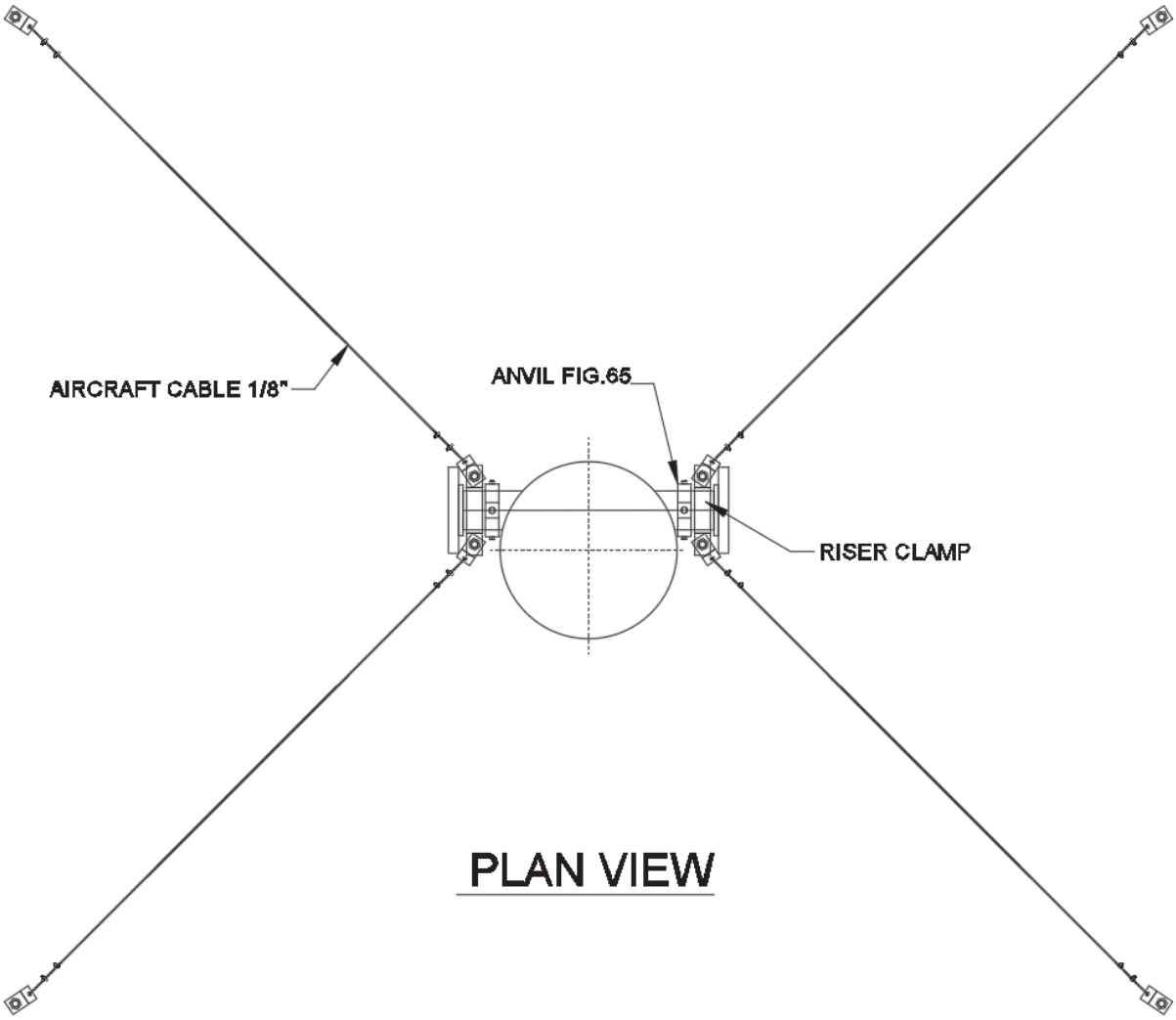

PLAN VIEW

PART 4: GENERAL NOTES FOR CABLE AND ROD STIFFENER INSTALLATION

1. *Plates and cable installation*



Type of steel: 44W

- Cable plates must be bended in 45 degrees.
- Cable plates must have a minimum of ¼ '' of thickness.
- Cable plates must be installed in the beginning of the threaded rods for seismic restraint and also installed to the concrete slab for restraint and anchorage.

2. *Cable U-bolts required installation*

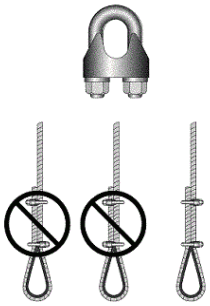

2 serres-câbles minimum par câbles par extrémités et doivent être installé de la façon suivante :

- A minimum of 2 u-bolts are required and must be installed as per above image

3. *Cable protectors*



- Cable protectors must be installed every time a cable passes through a cable plate

4. Notes on rod stiffeners



Attachment type 1:



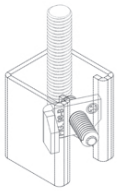

Attachment type 2:



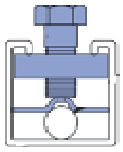

- Rod stiffeners must be installed on threaded rods only where seismic restraints are required and when rod length is 16'' or more for a 3/8'' rod.
- Rod stiffeners are made of a strut channel 1'' 5/8 X 1'' 5/8
- A minimum of 3 attachment are required in a rod stiffener even if the rod length is only 16''
- The first and the last attachment must begin at 2'' of the bottom and the top of the strut channel
- The spacing between attachments for a 3/8'' rod is 13''

Type of bolts: ASTM A307

PART 5: SEISMIC ANCHORS

1. ***Seismic Anchor list***

1- Simpson Strong-Tie model : Strong-bolt 2 ou Titen HD.
2- Powers Fasteners model : Power-Stud + SD2 ou Wedge-Bolt +.
3- Hilti model : Kwik Bolt TZ ou Kwik HUS-EZ mâle.
4- ITW Red-Head model : Trubolt +
5- Wej-it fastening systems Systems model : ANKR-Tite CCAT.

** Please contact us before using any other seismic anchor for verification and validation.

Seismic male screw anchor :

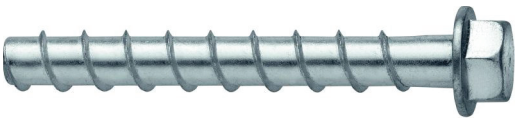

Seismic female screw anchor for threaded rod only:



Seismic expansion anchor :



34

Mécanique Nordique
Plumbing
Heating
Ventillation
mecanique.nordique@hotmail.com
1255 Rue J.A.Bombardier Lévis QC G7A 2P4
Tél : (418) 496-1109 Fax : (418) 496-3803

REVIEWED BY CONTRACTOR
Kudlik Construction Ltd.
NAME: Sandra Rousseau P.Eng
DATE: Aoû 21, 2018

IQUALUIT WWTP UPGRADES

DRAWING FOR APPROVAL

ENGINEER: **NUNAMI STANTEC LIMITED**

DRAWING #: AD-034

Section	:	23 25 00
Article	:	2.2
Plans	:	
Application	:	HW GLYCOL
Brand	:	DOW FROST HD
Model	:	50/50
Revised #	:	
Supplyer	:	PRODUIT CHIMIQUE ANCO
Date	:	**20/08/2018**
By	:	Martin Boucher

STANTEC PROJECT #: 110126045
SUBMITTAL # AD-034

This review by Stantec is for general conformance with the design concept of Stantec's design of the:
☐ Architectural ☐ Electrical
☐ Structural ☐ Other
☑ Mechanical

component(s) only and does not mean that Stantec has verified or approves the shop drawing(s). The Contractor remains solely responsible for the shop drawing(s) and this review by Stantec does not relieve the Contractor of the Contractor's responsibility for errors or omissions in the shop drawing(s) or for meeting all requirements of the contract documents. This review does not mean that Stantec approves the detailed design inherent in the shop drawing, responsibility for which shall remain with the Contractor submitting same, nor does this review mean that Stantec accepts any deviation of the shop drawing(s) from the contract documents. The Contractor is responsible for confirming all dimensions and correlating them at the job site, for all construction means, methods and techniques, and for coordination of construction work of all trades, including coordination of all shop drawings.

Stantec

☑ REVIEWED
☐ REVIEWED, AS NOTED
☐ REVISE AND RESUBMIT
☐ NOT REVIEWED

DATE 2018-08-27
BY Brendan Zrum, P.Eng

DOWFROST HD

Inhibited Propylene Glycol-based Heat Transfer Fluid

DOWFROST* HD heat transfer fluid is a formulation of 94.0 percent propylene glycol and a specially designed package of industrial corrosion inhibitors. The fluid is dyed bright yellow to aid in leak detection. Solutions in water provide freeze protection to below -50°C (-60°F) and burst protection to below -73°C (-100°F).

Recommended use temperature range: -45°C (-50°F) to 160°C (325°F)

Suitable applications: single fluid process heating and cooling, closed-loop, water-based HVAC applications where propylene glycol solutions are preferred or required.

For health and safety information for this product, contact your Dow sales representative or call the number for your area on the second page of this sheet for a Material Safety Data Sheet (MSDS).

Typical Concentrations of DOWFROST HD Fluid Required to Provide Freeze and Burst Protection at Various Temperatures

Temperature °C (°F)	Percent DOWFROST HD Fluid Concentration Required	
	For Freeze Protection Volume %	For Burst Protection Volume %
-7 (20)	18	12
-12 (10)	29	20
-18 (0)	36	24
-23 (-10)	42	28
-29 (-20)	46	30
-34 (-30)	50	33
-40 (-40)	54	35
-46 (-50)	57	35
-51 (-60)	60	35

NOTE: These figures are examples only and may not be appropriate to your situation. Generally, for an extended margin of protection, you should select a temperature in this table that is at least 3°C (5°F) lower than the expected lowest ambient temperature. Inhibitor levels should be adjusted for solutions of less than 20% glycol. Contact Dow for information on specific cases or further assistance.
ATTENTION: These are typical numbers only and are not to be regarded as specifications. As use conditions are not within its control, Dow does not guarantee results from use of the information or products herein; and gives no warranty, express or implied.

Typical Freezing and Boiling Points of DOWFROST HD Fluid†

Wt. % Propylene Glycol	Vol. % Propylene Glycol	Wt. % DOWFROST HD	Vol. % DOWFROST HD	Freezing Point °C (°F)	Boiling Point °C @ 101 kPa (°F@ 760 mmHg)	Degree Brix††	Refractive Index 22°C (72°F)
0.0	0.0	0.0	0.0	0 (32.0)	100.0 (212)	0.0	1.3328
5.0	4.8	5.3	5.1	-1.6 (29.1)	100.0 (212)	4.8	1.3383
10.0	9.6	10.7	10.2	-3.3 (26.1)	100.0 (212)	8.4	1.3438
15.0	14.5	16.0	15.4	-5.1 (22.9)	100.0 (212)	12.9	1.3495
20.0	19.4	21.3	20.6	-7.1 (19.2)	100.6 (213)	15.4	1.3555
25.0	24.4	26.6	26.0	-9.6 (14.7)	101.1 (214)	19.0	1.3615
30.0	29.4	31.9	31.3	-12.7 (9.2)	102.2 (216)	22.0	1.3675
35.0	34.4	37.2	36.6	-16.4 (2.4)	102.8 (217)	26.1	1.3733
40.0	39.6	42.6	42.1	-21.1 (-6.0)	103.9 (219)	29.1	1.3790
45.0	44.7	47.9	47.6	-26.7 (-16.1)	104.4 (220)	31.8	1.3847
50.0	49.9	53.2	53.1	-33.5 (-28.3)	105.6 (222)	34.7	1.3903
55.0	55.0	58.5	58.5	-41.6 (-42.8)	106.1 (223)	38.0	1.3956
60.0	60.0	63.8	63.8	-51.1 (-59.9)	107.2 (225)	40.6	1.4008
65.0	65.0	69.1	69.1	b	108.3 (227)	42.1	1.4058
70.0	70.0	74.5	74.5	b	110.0 (230)	44.1	1.4104
75.0	75.0	79.8	79.8	b	113.9 (237)	46.1	1.4150
80.0	80.0	85.1	85.1	b	118.3 (245)	48.0	1.4193
85.0	85.0	90.4	90.4	b	125.0 (257)	50.0	1.4235
90.0	90.0	95.7	95.7	b	132.2 (270)	51.4	1.4275
95.0	95.0	a	a	b	154.4 (310)	52.8	1.4315

† Typical properties, not to be construed as specifications.

†† Degree Brix is a measure of the sugar concentration in a fluid and is important in fermentation and syrups applications. Although there is no sugar present in DOWFROST heat transfer fluids, the glycol affects the refractive index of the fluid in a similar fashion.

[a] Propylene glycol concentrations greater than 94% are not attainable with DOWFROST HD fluid.

[b] Freezing points are below -50°C (-60°F).

NOTE: Generally, for an extended margin of protection, you should select a temperature in this table that is at least 3°C (5°F) lower than the expected lowest ambient temperature. Inhibitor levels should be adjusted for solutions of less than 20% glycol. Contact Dow for information on specific cases or further assistance.

*Trademark of The Dow Chemical Company

DOWFROST HD
Inhibited Propylene Glycol-based Heat Transfer Fluid

Typical Properties of DOWFROST HD Fluid†

	DOWFROST HD Heat Transfer Fluid
Composition (% by weight)	
Propylene Glycol	94
Performance Additives	6
Color	Fluorescent Yellow
Specific Gravity 15/15°C (60/60°F)	1.053–1.063
pH of Solution (50% glycol)	9.5–10.5
Reserve Alkalinity (min.)	15.0 ml

†Typical properties, not to be construed as specifications. Complete sales specifications are available on request.

Saturation Properties of DOWFROST HD Fluid at 30% Propylene Glycol Concentration by Volume

Temp. °C	(°F)	Specific Heat kJ/(kg)(K) (Btu/lb°F)	Density kg/m³ (lb/ft³)	Therm. Cond. W/mK [Btu/hr ft² (°F/ft)]	Viscosity mPa·s (cps)
10	(50)	3.756 (0.898)	1043.85 (65.17)	0.4344 (0.2510)	4.5068 (4.51)
40	(104)	3.841 (0.918)	1029.85 (64.29)	0.4622 (0.2670)	1.6295 (1.63)
65	(149)	3.913 (0.935)	1014.87 (63.36)	0.4771 (0.2757)	0.9144 (0.91)
90	(194)	3.984 (0.952)	996.86 (62.23)	0.4846 (0.2800)	0.6040 (0.60)
120	(248)	4.070 (0.973)	971.26 (60.63)	0.4838 (0.2795)	0.4246 (0.42)

Saturation Properties of DOWFROST HD Fluid at 40% Propylene Glycol Concentration by Volume

Temp. °C	(°F)	Specific Heat kJ/(kg)(K) (Btu/lb°F)	Density kg/m³ (lb/ft³)	Therm. Cond. W/mK [Btu/hr ft² (°F/ft)]	Viscosity mPa·s (cps)
-20	(-4)	3.453 (0.825)	1066.76 (66.60)	0.3635 (0.2100)	48.9043 (48.90)
10	(50)	3.564 (0.852)	1055.38 (65.89)	0.3936 (0.2274)	7.2173 (7.22)
40	(104)	3.675 (0.878)	1039.77 (64.91)	0.4150 (0.2398)	2.2389 (2.24)
65	(149)	3.767 (0.900)	1023.55 (63.90)	0.4262 (0.2463)	1.1762 (1.18)
90	(194)	3.859 (0.922)	1004.39 (62.70)	0.4313 (0.2492)	0.7462 (0.75)
120	(248)	3.970 (0.949)	977.53 (61.03)	0.4294 (0.2481)	0.5084 (0.51)

Saturation Properties of DOWFROST HD Fluid at 50% Propylene Glycol Concentration by Volume

Temp. °C	(°F)	Specific Heat kJ/(kg)(K) (Btu/lb°F)	Density kg/m³ (lb/ft³)	Therm. Cond. W/mK [Btu/hr ft² (°F/ft)]	Viscosity mPa·s (cps)
-30	(-22)	3.165 (0.756)	1081.98 (67.55)	0.3246 (0.1875)	172.8273 (172.83)
-20	(-4)	3.210 (0.767)	1078.51 (67.33)	0.3336 (0.1927)	73.0193 (73.02)
10	(50)	3.346 (0.800)	1065.40 (66.51)	0.3560 (0.2057)	10.6481 (10.65)
40	(104)	3.481 (0.832)	1048.23 (65.44)	0.3716 (0.2147)	3.1103 (3.11)
65	(149)	3.594 (0.859)	1030.83 (64.35)	0.3792 (0.2191)	1.5483 (1.55)
90	(194)	3.707 (0.886)	1010.61 (63.09)	0.3821 (0.2208)	0.9339 (0.93)
120	(248)	3.843 (0.919)	982.63 (61.34)	0.3792 (0.2191)	0.6029 (0.60)

For further information, call...

In the United States and Canada: 1-800-447-4369 • FAX: 1-989-832-1465

In Europe: +32 3 450 2240 • FAX: +32 3 450 2815

In the Pacific: +886 22 547 8731 • FAX: +886 22 713 0092

In other Global Areas: 1-989-832-1560 • FAX: 1-989-832-1465

www.dowfrost.com

NOTICE: No freedom from any patent owned by Seller or others is to be inferred. Because use conditions and applicable laws may differ from one location to another and may change with time, Customer is responsible for determining whether products and the information in this document are appropriate for Customer's use and for ensuring that Customer's workplace and disposal practices are in compliance with applicable laws and other governmental enactments. Seller assumes no obligation or liability for the information in this document. NO WARRANTIES ARE GIVEN; ALL IMPLIED WARRANTIES OF MERCHANTABILITY OR FITNESS FOR A PARTICULAR PURPOSE ARE EXPRESSLY EXCLUDED.

Published November 2001

Printed in U.S.A.

*Trademark of The Dow Chemical Company

NA/LA/Pacific: Form No. 180-01315-1101 AMS

35

REVIEWED BY CONTRACTOR

Kudlik Construction Ltd.

NAME: Sandra Rousseau P.Eng

DATE: Aug 31, 2018

Mécanique Nordique Plumbing Heating Ventillation

mecanique.nordique@hotmail.com

1255 Rue J.A.Bombardier
Lévis, Québec
G7A 2P4
Téléphone: 418-496-1109
Télécopieur: 418-496-3803

IQALUIT WWTP UPGRADE

DRAWING FOR APPROVAL

Ingineer : NUNAMI STANTEC

DRAWING #: AD-035

Section	PLAN
Article	SCHEDULE
Plans	M802
Application	: TK-3.2
Brand	: THERM-X TROL
Model	: ST-8
Revised #	:
Supplyer	: Wolseley

STANTEC PROJECT #: 110126045

SUBMITTAL # AD-035

This review by Stantec is for general conformance with the design concept of Stantec's design of the:

☐ Architectural ☐ Electrical
☐ Structural ☐ Other
☑ Mechanical

component(s) only and does not mean that Stantec has verified or approves the shop drawing(s). The Contractor remains solely responsible for the shop drawing(s) and this review by Stantec does not relieve the Contractor of the Contractor's responsibility for errors or omissions in the shop drawing(s) or for meeting all requirements of the contract documents. This review does not mean that Stantec approves the detailed design inherent in the shop drawing, responsibility for which shall remain with the Contractor submitting same, nor does this review mean that Stantec accepts any deviation of the shop drawing(s) from the contract documents. The Contractor is responsible for confirming all dimensions and correlating them at the job site, for all construction means, methods and techniques, and for coordination of construction work of all trades, including coordination of all shop drawings.

Stantec

☑ REVIEWED

☐ REVIEWED, AS NOTED

☐ REVISE AND RESUBMIT

☐ NOT REVIEWED

DATE 2018-08-31

BY Brendan Zrum, P.Eng

Pages incl.	2
Date	: **31-08-2018**
By	: **Mécanique Nordique Inc.**

Non-ASME THERM-X-TROL®

General Usage

- Residential Water Heaters
- Office Buildings
- Apartment Buildings
- Dormitories
- Elderly Housing
- Extended Care Facilities
- Condominiums/Multiple Residential
- Food Service
- Laundromats
- Hospitals
- Other General-Use Hot Water Systems

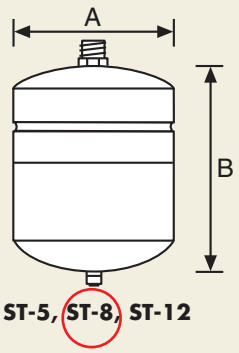

ST-5, ST-8, ST-12

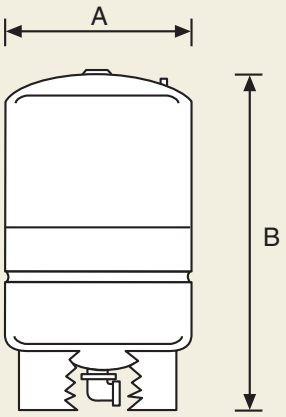

ST-25V through ST-210V

THERM-X-TROL Non-ASME Specifications

Model No.	Total Volume (Gals.)	Max. Acceptance Factor	Diameter (A)	Height (B)	System Connection	Ship Weight (lbs.)
ST-5	2.0	.45	8″	12 5/8″	3/4″ NPT	5
ST-8	3.2	.59	9″	15″	3/4″ NPT	7
ST-12	4.4	.73	11″	15″	3/4″ NPT	9
ST-25V	10.3	1.0	15 3/8″	19 1/4″	3/4″ NPT	23
ST-30V	14.0	.81	15 3/8″	23 7/8″	3/4″ NPT	25
ST-42V	20.0	.57	15 3/8″	31 5/8″	3/4″ NPT	33
ST-60V	34.0	1.00	22″	29 5/8″	1 1/4″ NPT	61
ST-80V	44.0	.77	22″	36″	1 1/4″ NPT	69
ST-180V	62.0	.55	22″	46 3/4″	1 1/4″ NPT	92
ST-200V	81.0	.41	22″	56 3/8″	1 1/4″ NPT	103
ST-210V	86.0	.54	26″	47 1/4″	1 1/4″ NPT	123
ST-451	158.0	.65	73 1/4″	30″	2″ NPT	508
ST-452	211.0	.65	91″	30″	2″ NPT	760
ST-453	264.0	.65	85 5/8″	36″	3″ NPT	810
ST-454	317.0	.65	98″	36″	3″ NPT	914
ST-455	370.0	.65	110 3/8″	36″	3″ NPT	1,018
ST-456	422.0	.65	81 7/8″	48″	3″ NPT	1,655
ST-457	528.0	.65	97 1/4″	48″	3″ NPT	1,925

Maximum Working Pressure: 150 PSI. All Models listed by NSF/ANSI 61® (excluding ST-451 – ST-457);
Maximum Allowable Working Temperature: ST-5 through ST-210V: 200°F; ST-451 through ST-457: 240°F;
Standard Factory Precharge: 40 PSIG (ST-5 – ST-210V); 55 PSIG (ST-451 – ST-457)

THERMAL EXPANSION TANKS

FOR POTABLE WATER

INSTALLATION & OPERATION INSTRUCTIONS

AMTROL®

Models ST-5 through ST-210V
Models T-5 through T-12



NOTE: Inspect for shipping damage. Notify freight carrier or store where purchased immediately if damage is present. To avoid risk of personal injury and property damage, if the product appears to be malfunctioning or shows signs of corrosion, call a qualified professional immediately. Current copies of the product manual can be viewed at www.amtrol.com. Use proper safety equipment when installing.

THIS IS THE SAFETY ALERT SYMBOL. IT IS USED TO ALERT YOU TO POTENTIAL PERSONAL INJURY AND OTHER HAZARDS. OBEY ALL SAFETY MESSAGES THAT FOLLOW THIS SYMBOL TO REDUCE THE RISK OF PERSONAL INJURY AS WELL AS PROPERTY DAMAGE.

⚠WARNING **USE ONLY WITH RESIDENTIAL POTABLE WATER SYSTEMS.** Do not operate in a setting with freezing temperatures or where the temperature can exceed **200°F** and do not exceed the maximum working pressure specified for this Product. Do not use on a system with ASME-rated vessels.

⚠WARNING **READ CAREFULLY THE PRODUCT INSTALLATION, OPERATING AND MAINTENANCE MANUAL. FAILURE TO FOLLOW THE INSTRUCTIONS AND WARNINGS IN THE MANUAL MAY RESULT IN SERIOUS OR FATAL INJURY AND/OR PROPERTY DAMAGE, AND WILL VOID THE PRODUCT WARRANTY. THIS PRODUCT MUST BE INSTALLED BY A QUALIFIED PROFESSIONAL. FOLLOW ALL APPLICABLE LOCAL AND STATE CODES AND REGULATIONS, IN THE ABSENCE OF SUCH CODES, FOLLOW THE CURRENT EDITIONS OF THE NATIONAL PLUMBING CODE AND NATIONAL ELECTRIC CODE, AS APPLICABLE.**

⚠WARNING This Product, like most Products under pressure, may over time corrode, weaken and burst or explode, causing serious or fatal injury, leaking or flooding and/or property damage. To minimize risk, a licensed professional must install and periodically inspect and service the Product. A drip pan connected to an adequate drain must be installed if leaking or flooding could cause property damage. Do not locate in an area where leaking could cause property damage to the area adjacent to the appliance or to lower floors of the structure.

CALIFORNIA PROPOSITION 65 WARNING! This product contains a chemical known by the State of California to cause cancer and to cause birth defects or other reproductive harm. (California Installer/Contractor - California law requires that this notice be given to consumer/end user of this product.) **For more information: www.amtrol.com/prop65.html**

⚠WARNING **RUPTURE OR EXPLOSION HAZARD.** Do not expose Product to freezing temperatures or temperatures in excess of **200°F**. Do not adjust the pre-charge or re-pressure this Product except during installation or regular inspection. Replace the Product and do not adjust the precharge if corroded, damaged or with diminished integrity. Adjustments to pre-charge must be done at ambient temperature only. Failure to properly size the Product or follow these instructions may result in excessive strain on the system and may lead to Product failure, serious or fatal personal injury, leakage and/or property damage.

⚠WARNING A relief valve must be installed to prevent pressure in excess of local code requirement or maximum working pressure designated in the Product Manual, whichever is less. At least once every 3 years or if discharge is present, a licensed contractor should inspect the temperature and pressure relief valve and replace if corrosion is evident or the valve does not function. **FAILURE TO INSPECT THIS VALVE AS DIRECTED COULD RESULT IN UNSAFE TEMPERATURE OR PRESSURE BUILD-UP WHICH CAN RESULT IN PRODUCT FAILURE, SERIOUS INJURY OR DEATH AND/OR SEVERE PROPERTY DAMAGE AND VOID THE PRODUCT WARRANTY.**

⚠WARNING **Chlorine & Aggressive Water:** The water quality can significantly influence the life of this Product. You should test for corrosive elements, acidity, total solids and other relevant contaminants, including chlorine and treat your water appropriately to insure satisfactory performance and prevent premature failure.

PLEASE READ THE FOLLOWING INSTRUCTIONS CAREFULLY

IMPORTANT GENERAL SAFETY INFORMATION -
ADDITIONAL SPECIFIC SAFETY ALERTS APPEAR IN THE FOLLOWING INSTRUCTIONS.

Pre-Installation

1 Ensure expansion tank is sized properly for application (Figure 1).
2. Remove plastic cap from air valve.
3. With tank empty of water, adjust air precharge to match cold water supply pressure.
4. Replace and tighten plastic cap on air valve.
5. Therm-X-Trol® ST-5, ST-8, ST-12 only: Insert Turbulator into connector (optional).

⚠WARNING **FAILURE TO PROPERLY SEAL VALVE CAP WILL RESULT IN LOSS OF PRECHARGE CAUSING PRODUCT TO FAIL.**

Installation

1. Install the expansion tank on the cold water supply line to the water heater at a point between the water heater and backflow preventer or other one-way device (Figure 2).

⚠WARNING Mount tank vertically in downward position only. Ensure the piping can support the entire weight of the tank when full of water.

⚠WARNING Models ST-25V through ST-210V are floor standing and may not be hung from the piping.

2. Once the expansion tank is installed, check the cold water supply line for any leakage. Make repairs if necessary.
3. Before the initial firing of the water heater, open any hot water fixture and draw water until all air is removed from the system. Turn the water heater temperature control to desired ending temperature (see water heater instructions). Do not set temperature higher than the expansion tank maximum.
4. To relieve initial thermal expansion, slightly open a hot water faucet. Continue until water heater aquastat temperature is satisfied. Once heater is at its operating range, no further bleeding of expanded water is required.
5. The water heater and expansion tank will now be operational. The expansion tank will control pressure increases caused by thermal expansion to a level below the water heater relief valve setting.

Maintenance

A professional plumber should check the complete system, including the expansion tank, yearly and more frequently as the system ages. Checking the precharge allows a small quantity of air to escape and can result in an insufficient air charge. Always check the precharge while the tank is isolated and empty of water, and be sure to maintain the proper precharge whenever the tank is inspected.

Warranty

ST-5 through ST-25V Models: Five (5) Year Limited Warranty
ST-30V through ST-210V Models: One (1) Year Limited Warranty
T-5 through T-12 Models: One (1) Year Limited Warranty
Visit www.amtrol.com for complete warranty details.

Figure 1.

Expansion Tank Volume (Gal.)
Maximum Temperature Setting 140°F

Water Heater Size (gals.)	Static Supply Pressure (psig)		
	40	**60**	**80**
40	2.0	2.0	2.0
50	2.0	2.0	2.0
60	3.2	3.2	3.2
80	3.2	3.2	4.4
120	4.4	4.4	10.3

Expansion Tank Volume (Gal.)
Maximum Temperature Setting 160°F

Water Heater Size (gals.)	Static Supply Pressure (psig)		
	40	**60**	**80**
40	2.0	2.0	3.2
50	2.0	3.2	3.2
60	3.2	3.2	4.4
80	3.2	4.4	10.3
120	4.4	10.3	10.3

Expansion Tank Volume (Gal.)
Maximum Temperature Setting 180°F

Water Heater Size (gals.)	Static Supply Pressure (psig)		
	40	**60**	**80**
40	3.2	3.2	3.2
50	3.2	3.2	4.4
60	3.2	4.4	10.3
80	4.4	10.3	10.3
120	10.3	10.3	10.3

Residential sizing based on: 40°F incoming water temperature; 150 psi T&P safety relief valve; Pre-charge equal to static supply pressure.
For larger commercial applications: Visit amtrol.com, download the AMTROL App or contact Technical Support at 401.535.1216.

Figure 2.

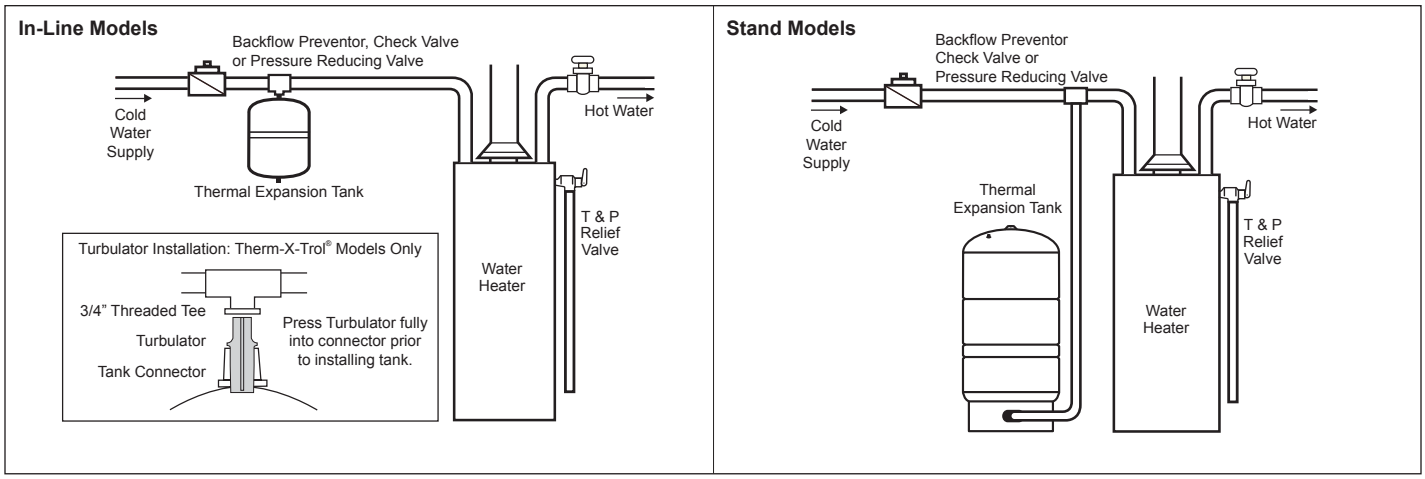

ANTIMICROBIAL PROTECTION™ TURBULATOR NSF/ANSI 61 LOW-LEAD C UPC ® Models up to 10.3 gallons

AMTROL
1400 Division Road, West Warwick, RI USA 02893
T: 800.426.8765 F: 800.293.1519
www.amtrol.com

LOW-LEAD IAPMO R&T™ PHCC PLUMBING-HEATING-COOLING CONTRACTORS ASSOCIATION MADE IN USA

© 2016 AMTROL Inc.

Part #: 9015-087 (06/16)

36

REVIEWED BY CONTRACTOR

Kudlik Construction Ltd.

NAME: Sandra Rousseau P.Eng

DATE: Aoû 31, 2018

Mécanique Nordique
Plumbing
Heating
Ventillation
mecanique.nordique@hotmail.com

1255 Rue J.A.Bombardier
Lévis, Québec
G7A 2P4
Téléphone: 418-496-1109
Télécopieur: 418-496-3803

IQALUIT WWTP UPGRADE

DRAWING FOR APPROVAL

Ingineer : NUNAMI STANTEC

DRAWING #: AD-037

Section		23 41 00
Article		2.3
Plans		M-402
Application	:	HRV-1
Brand	:	TRI DIM
Model	:	TRI-PLEAT ULTRA
Revised #	:	
Supplyer	:	TRI DIM

STANTEC PROJECT #: 110126045

SUBMITTAL # AD-037

This review by Stantec is for general conformance with the design concept of Stantec's design of the:

☐ Architectural ☐ Electrical
☐ Structural ☐ Other
☑ Mechanical

component(s) only and does not mean that Stantec has verified or approves the shop drawing(s). The Contractor remains solely responsible for the shop drawing(s) and this review by Stantec does not relieve the Contractor of the Contractor's responsibility for errors or omissions in the shop drawing(s) or for meeting all requirements of the contract documents. This review does not mean that Stantec approves the detailed design inherent in the shop drawing, responsibility for which shall remain with the Contractor submitting same, nor does this review mean that Stantec accepts any deviation of the shop drawing(s) from the contract documents. The Contractor is responsible for confirming all dimensions and correlating them at the job site, for all construction means, methods and techniques, and for coordination of construction work of all trades, including coordination of all shop drawings.

Stantec

☑ REVIEWED
☐ REVIEWED, AS NOTED
☐ REVISE AND RESUBMIT
☐ NOT REVIEWED

DATE 2018-08-31

BY Brendan Zrum, P.Eng

Pages incl.		5
Date	:	**2018-08-31**
By	:	**Mécanique Nordique Inc.**

TRI-PLEAT ULTRA

TRI DIM
FILTER CORPORATION

REACHING NEW HEIGHTS

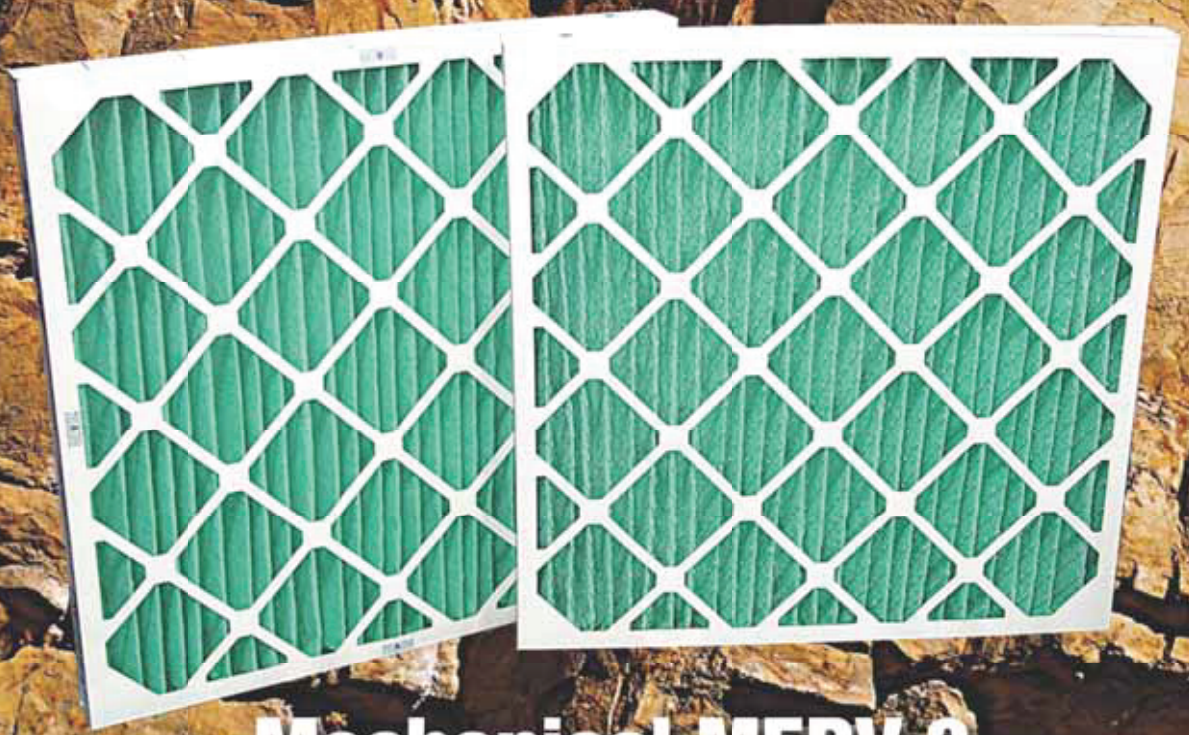

- Mechanical MERV 8
- Low Pressure Drop

LOW RESISTANCE



TRI-PLEAT ultra

Mechanical MERV 8
Low Pressure Drop

TRI-PLEAT ULTRA OFFERS A NEW LEVEL OF PERFORMANCE

... a new benchmark for pleated air filters - featuring mechanical MERV 8 performance at a very low, energy saving pressure drop - setting the standard for performance.

MECHANICAL MEDIA

- most synthetic medias rely on an electrostatic enhancement to achieve their rated efficiency levels - this enhancement only provides high efficiency for a short period of time before it dissipates. So the performance that you paid for was not delivered.

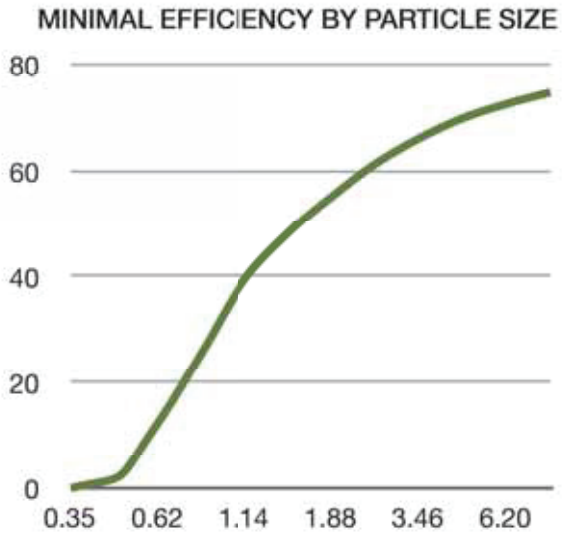

In order to ensure the promised performance is delivered the TRI-PLEAT ULTRA was tested via ASHRAE 52.2 Appendix J. The graph (upper right) shows the results of an ASHRAE 52.2 Appendix J test that dissipates the electrostatic charge - results document a MERV 8 after the electrostatic charge is dissipated.

Why is important to you? Because you deserve the efficiency that you are paying from day 1 till the filter is changed out.

MECHANICAL

LOW PRESSURE DROP - TRI-PLEAT ULTRA offers ultra low resistance 0.21"WG at 2000 CFM (for a 24x24x2) - this is up to 50% lower than comparable products (see chart below). This equals a significant reduction in operating resistance which equals energy savings.

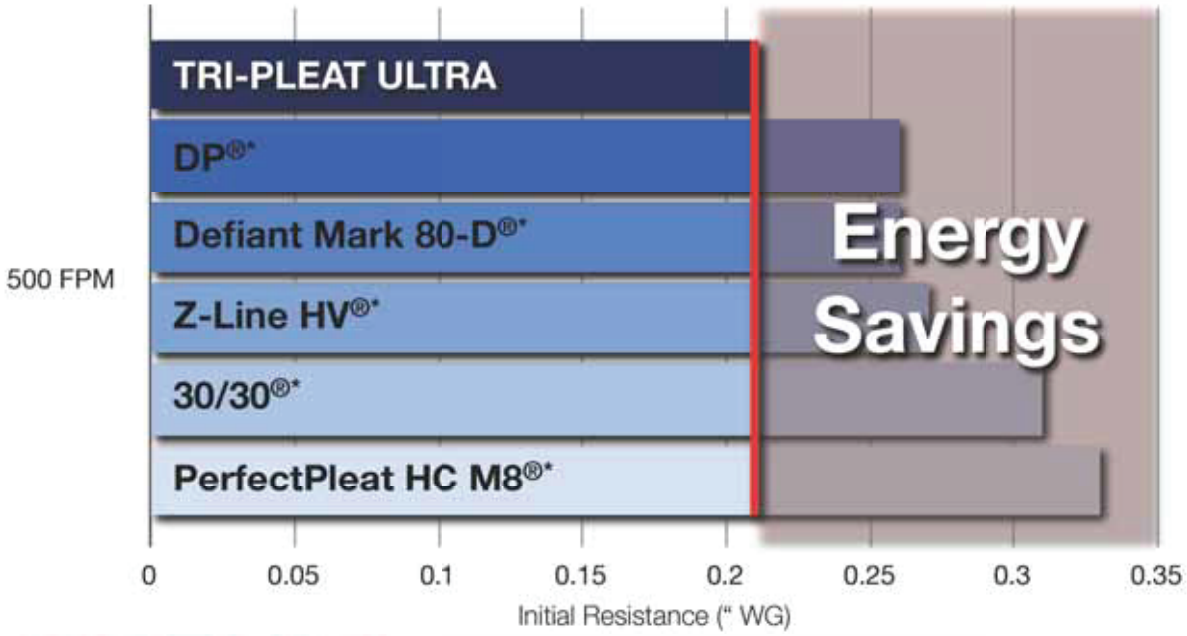

CONSTRUCTION - TRI-PLEAT ULTRA utilizes a moisture resistance 28-point die-cut frame with diagonal supports bonded to the media pack for extra strength and to maintain proper pleat spacing. The pleat pack is bonded to a two piece frame. The media is also bonded to a metal grid that maintains pleat shape and adds stability to the media through changes in airflow.



In addition the four-inch deep filters also use additional cardboard 'fingers' for additional strength and stability. All Tri-Pleat die cut frames are treated with an Aqua Coat treatment for added moisture resistance.

CAPACITY LEVELS - The TRI-PLEAT ULTRA is offered in two different capacities, the ULTRA ME filters are the High Capacity series manufactured with the maximum amount of media, 15 pleats per foot. The high capacity series offers the lowest resistance, highest dust holding capacity and the longest service life. The ULTRA LE filters are the Standard Capacity series and offer 11 pleats per foot. The standard capacity series offers extended surface area, long service life and high dust holding capacity.

* These competitive products and registered trademarks are used for identification purposes only. Resistance data taken from competitive websites during February 2011.

Specifications

PERFORMANCE

MEDIA Synthetic, Mechanical

FRAME Moisture Resistant Die-Cut

FINAL RESISTANCE 1.0" WG *(249 PA)*

RESISTANCE

1" Deep ULTRA LE Series = 0.49"WG *(122 PA)*
2" Deep ULTRA LE Series = 0.24"WG *(60 PA)*
4" Deep ULTRA LE Series = 0.22"WG *(55 PA)*

1" Deep ULTRA ME Series = 0.43"WG *(107 PA)*
2" Deep ULTRA ME Series = 0.21"WG *(52 PA)*
4" Deep ULTRA ME Series = 0.20"WG *(50 PA)*

APPROX. SQ. FT. OF MEDIA *(per 1.0 Sq. Ft. of Filter Face Area)*

1" Deep ES40LE Series Pleat = 1.6 Sq. Ft.
2" Deep ES40LE Series Pleat = 3.2 Sq. Ft.
4" Deep ES40LE Series Pleat = 5.9 Sq. Ft.

1" Deep ES40ME Series Pleat = 2.3 Sq. Ft.
2" Deep ES40ME Series Pleat = 4.8 Sq. Ft.
4" Deep ES40ME Series Pleat = 7.2 Sq. Ft.

EFFICIENCY

MERV 8 per ASHRAE 52.2 Appendix J

MEETS ANSI/UL-900 REQUIREMENTS

Tri-Dim Filter Corporation is committed to continual product development – all descriptions, specifications and performance data are subject to change without notice.
Tri-Dim products are manufactured to exacting criteria - there can be a ±5% variance in filter performance.
Tri-Dim® and Tri-Dek® are Registered Trademarks of Tri-Dim Filter Corporation.

TRI DIM FILTER CORPORATION
TRI-DIM FILTER CORPORATION
P.O. BOX 466 • 93 INDUSTRIAL DRIVE
LOUISA, VA 23093
(540) 967-2600 • FAX: (540) 967-2835
EMAIL: info@tridim.com • Website: www.tridim.com
TOLL FREE 1-800-458-9835

Since 1965 40 years VALUE INNOVATION SERVICE

AMERICAN OWNED AND OPERATED

Local Representation:

Brochure # 900-2
Revision: 02/2011

PLEASE RECYCLE - This paper may not be recyclable in your area if facilities do not exist. This brochure is printed on paper that is certified by the Sustainable Forestry Initiative (SFI) - for more information go to www.sfiprogram.org

Member of NAFA National Air Filtration Association

VOLUME
3 OF 3

CONTROLS

OPERATION & MAINTENANCE MANUAL

WASTE WATER TREATMENT

IQALUIT
NUNAVUT

2018/2019

VOLUME
3 OF 3

CONTROLS

OPERATION &
MAINTENANCE
MANUAL

WASTE WATER
TREATMENT
UPGRADE

IQALUIT
NUNAVUT

2018/2019

PREPARED BY

Mecanique Nordique
Inc

OWNER MANUAL

IQALUIT WASTE WATER TREATMENT PLANT UPGRADES IQALUIT, NUNAVUT

AHU-3

25 05 01 – Control Systems

REFERENCE NUMBER: 8N0Y-0079

OWNER MANUAL

Project: **IQALUIT WASTE WATER TREATMENT PLANT UPGRADES**

Owner: **CITY OF IQALUIT**
901, Nunavut Drive, PO Box 460
Iqaluit, (Nunavut)
X0A 0H0
Phone: (867) 979-5600
Fax: (867) 979-5922

Consulting Engineer: **NUNAMI STANTEC LIMITED**
P.O. Box 188
Rankin Inlet (Nunavut)
X0C 0G0
Phone: (867) 645-2805
Fax: (867) 645-2063

Gen. Contractor: **Mécanique Nordique**
1255, rue J.A. Bombardier
Lévis, (Québec)
G7A 2P4
Phone: (418) 496-1109
Fax: (418) 496-3803

Controls Contractor: **Johnson Controls**
765, avenue Godin
Québec, (Québec)
G1M 2W8
Phone: (418) 681-0085
Fax: (418) 681-3599

SECTION 1
TABLE OF CONTENTS

TABLE OF CONTENTS

- **SECTION 1 – TABLE OF CONTENTS**

  TABLE OF CONTENTS 1.1

- **SECTION 2 – INTRODUCTION LETTER**

  INTRODUCTION LETTER 2.1

  CONTROL SYSTEM DESCRIPTION 2.2

- **SECTION 3 – CONTROL SYSTEM**

  OPERATIONS TRAINING 3.1

  SECURITY DATABASE BACKUP AND RESTORE 3.2

- **SECTION 4 – BUILDING SYSTEM DESCRIPTIONS**

  AS BUILT DRAWING 4.1

- **SECTION 5 – DDC PANEL LAYOUT**

  AS BUILT PANELS LAYOUT 5.1

  PANEL POINTS LIST 5.2

- **SECTION 6 – SHOP DRAWINGS**

NETWORK CONTROL ENGINE CATALOG (MS-NAE45)	6.1
DIGITAL CONTROLLER (MS- FEC / IOM / VMA)	6.2
TEMPERATURE TRANSMITTER	6.3
DIFF PRESSURE TRANSMITTER	6.4
HIGH AND LOW LIMIT CONTROLS	6.5
CURRENT SWITCH DEVICES (DSDSC)	6.6
FAN SAFETY ALARM CIRCUITS (RIBxxx)	6.7
CONTROL VALVES JOHNSON (VG1000)	6.8
RELAYS (RH2B-xx)	6.9

- **SECTION 7 – EQUIPMENT SCHEDULES**

VALVES SCHEDULE	7.1

- **SECTION 8 – CERTIFICATION AND TESTING**

POINTS VERIFICATION	8.1

- **SECTION 9 – MAINTENANCE**

MAINTENANCE PROCEDURE	9.1
PREVENTATIVE MAINTENANCE PROGRAM	9.2
WARRANTY LETTER	9.3

- **SECTION 10 –SOFTWARE**

PROGRAMS	10.1
GRAPHICS	10.2

LIST OF SUPPLIERS

SUPPLIERS	CONTACT INFORMATION
JOHNSON EQUIPMENT SETRA EQUIPMENT	**JOHNSON CONTROLS** 765, avenue Godin Québec, (Québec) G1M 2W8 Phone: 418 681-0085 Fax: 418 681-3599
SYSTEM SENSOR FUNCTIONAL DEVICES INC.	**KELE** 3300 Brother Boulevard Memphis, TN 38133 Phone: 877 826-9045 Fax: 800 284-5353
DWYER	**FURNACO INTERNATIONAL** 926, rue Aubry St-Jean sur Richelieu, (Québec) J3B 2H9 Phone: 450 347-2111 Fax: 450 347-2117

SECTION 2
INTRODUCTION LETTER

INTRODUCTION

The intent of this manual is to familiarize the maintenance personnel with the operation, routine maintenance and minor troubleshooting of the various mechanical systems installed in the building.

Included are many section of documentation that will allow the maintenance personnel to do minor repairs and adjustments necessary to maintain the mechanical systems operating in a satisfactory manner. Used properly, the instructions included in this manual will extend the useful life of the mecanical equipment in the building, prevent breakdowns and maintain fuel and power efficiency.

Contact Johnson Controls to obtain information on specialized maintenance literature, tools and service provided.

Controls System Description

Controls for the building are provided through a digital based building management system (BMS) with local zone control.

The BMS uses separate standalone digital controllers called CPU's to control discrete building system elements. The CPUs are microprocessor based controllers with full digital programming. What this entails is that each unit is designed to control a specific mechanical system and its components. The controls sequences have been generated in a visual software language by the equipment manufacturer, controls vendor or controls contractor and downloaded to the controllers. When the sequences are run, similar to operating a digital program on a home computer, inputs and outputs from/to control devices are controlled by the sequence and hence operate the equipment.

The controllers are all interconnected on a C-bus local area network (LAN). This allows the controllers to communicate designated information, i.e. fan on, OAT, etc. To monitor and adjust the control system an operator workstation has been provided and is connected to the same network. This station is similar to a home computer with both laser and dot matrix printers plus network and dialup communication capability. The workstation operates on the Windows Professional operating system and has been loaded with Microsoft office Netscape Communicator, FTP program, and Norton Anti Virus software plus the BMS operating software and visual programming package. All components of the main mechanical systems can be monitored and alarmed through the desktop workstation using simple pull down menus and point and click graphic control. Heating system and ventilation systems controllers are standalone units with monitoring points available to the BMS Operator Work Station (OWS). These controllers have limited controllability from the BMS, however they can be adjusted at the individual controllers. The remainder of the systems, such as plumbing and fuel oil are monitored, controlled and alarmed through the BMS OWS. It is important to understand that the operator workstation does not run the building mechanical systems. It is rather the main man-machine interface for the building that allows operators to access the controllers that do the actual control.

The controllers and the system are all designed for peerless fail-safe operation. In the event that one controller fails it will not effect the operation of the other controllers in the building. In addition if the network fails the operation of each controller will not be affected. Finally in the event that a controller fails equipment will go into a fail-safe operating mode, i.e. the heating system will be enabled and the pumps and boilers will operate.

Control of the zone thermostats is not by the main digital system. Instead proportional floating or two position system microprocessor thermostats and corresponding control valves have been provided. These thermostats operate independent of each other based on the room set point. The thermostats are, however, interconnected through a single zone night set back signal from the zone digital controllers. When in night set back the local zone control can be overridden by a local switch on the thermostat.

The controls system is extensively described in Section 3.19 of the manual. Operators should review the controls sequences and system architecture to familiarize themselves with the system design, limitations and operating principals.

Finally one of the most important features of any digital control system is the ability of the system to report system status and easy modification of controls sequences. If there are problems in the controls sequences, either due to the algorithms or the design base the sequences can easily be modified under service contracts by approved contractors or by operations personnel whom have completed the required training.

SECTION 3
CONTROL SYSTEM

Metasys Operators

Training Manual

Revision 6.0

This Page is for Important Phone Numbers and Metasys IP address Information.

JCI Contacts Name and Number:

_____

_____

_____

SMP (Site Management Portal) Information for Launcher

Local Metasys URL/IP/HostName:

Http://_____/metasys

Remote Metasys URL/IP/HostName:

Http://_____/metasys

Metasys RAP (Ready Access Portal) URL:

Http://_____/metasysrap (for an iPad/Android Tablet)

Http://_____/metasysrapmobile (For a Smartphone)

Administrator Usernames and Passwords

Windows:

Metasys:

Table of Contents

1. Logging into Metasys
1.1. Downloading and Installing Windows Launcher 4
1.2. Adding a Site to Windows Launcher 5
1.3. Launching Your Metasys Site 8
1.4. Adding Bookmarks to Launcher 8

2. Metasys Application Window
2.1. Metasys Symbols 9
2.2. Panel Layout 10
2.3. Password Change 12

3. Object Types
3.1. Analog Input 13
3.2. Analog Output 14
3.3. Analog Variable 15
3.4. Binary Input 16
3.5. Binary Output 17
3.6. Binary Variable 18

4. Object Extensions
4.1. Adding a Trend Extension to an Analog Object: 19
4.2. Adding a Trend Extension to a Binary Object 22
4.3. Adding an Alarm Extension to an Analog Object 25
4.4. Adding an Alarm Extension to a Binary Object 31
4.5. Adding a Totalization Extension to an Analog Object: 34
4.6. Adding a Totalization Extension to a Binary Object: 37

5. Event Viewer 42

6. Trend Viewer 45

7. Schedule & Calendar Objects
7.1. Creating a Calendar Object 47
7.2. Editing a Calendar Object 51
7.3. Creating a Schedule Object 52
7.4. Editing a Schedule Object 55

8. Tailored Summaries 58

Appendix A: 'Graphics+' Section of '**Metasys System Online Help PDF**'

1. Running Metasys Using Launcher

1.1. Downloading and Installing Launcher

- Go to the URL for your Metasys SMP, you will be greeted with the following screen to download launcher directly. The depends if you are local or remote and is written on the first page.

Otherwise you can download the launcher from the internet at:
http://www.johnsoncontrols.com/content/dam/WWW/jci/be/launcher/Launcher.msi

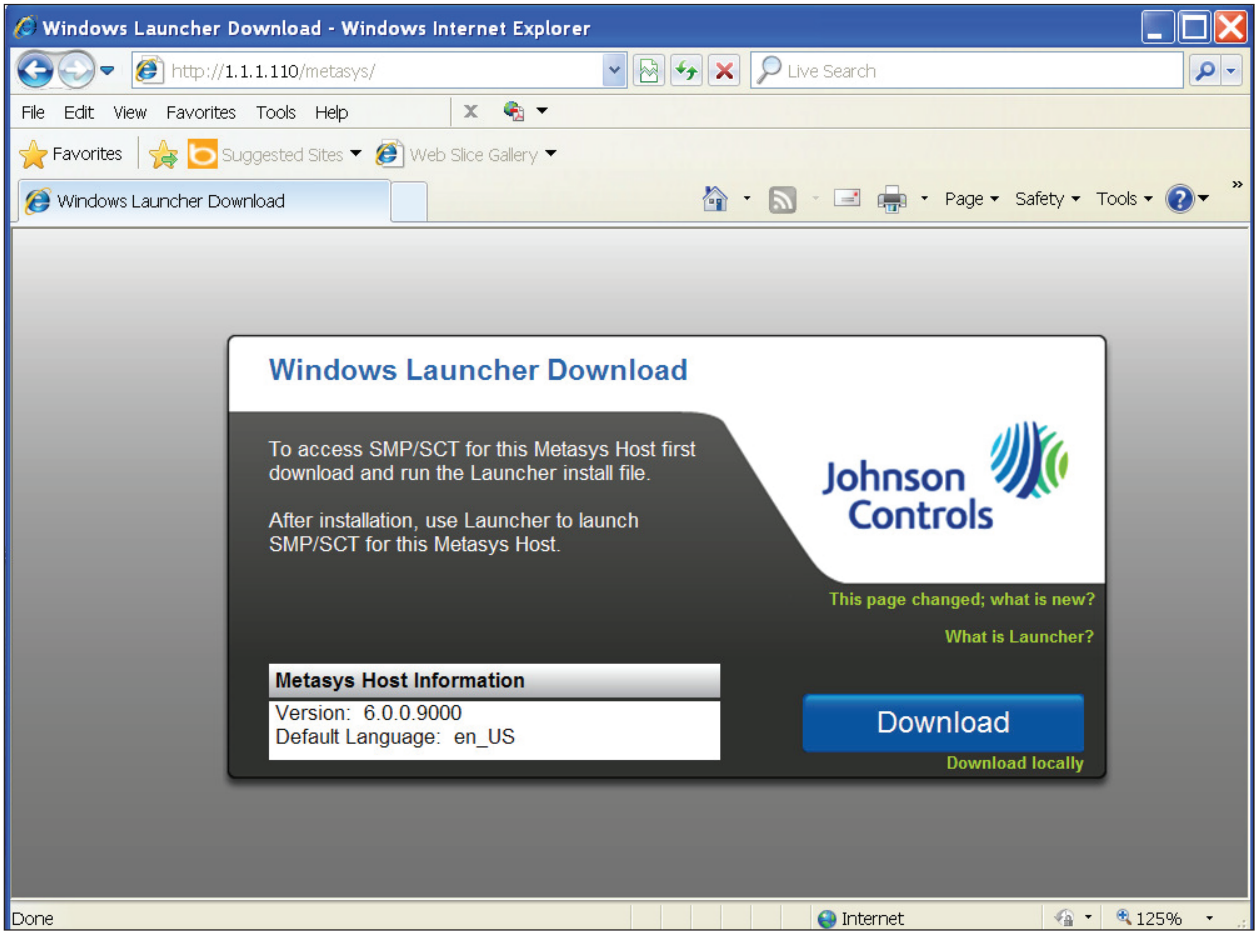

Figure 1: Launcher Download Screen

- Once downloaded, click RUN to install the Launcher program. This will require administrator privileges that can be obtained through the I.T. Department. You should have these privileges if you are using your own personal computer.
- Consult your Johnson Controls Rep if you have a MAC (Apple) Computer.

1.2. Adding A Site to Launcher

- Once installed log in to Windows with your normal username and password. You should find a link to the launcher program on the desktop. Run this link and the Launcher window will open.

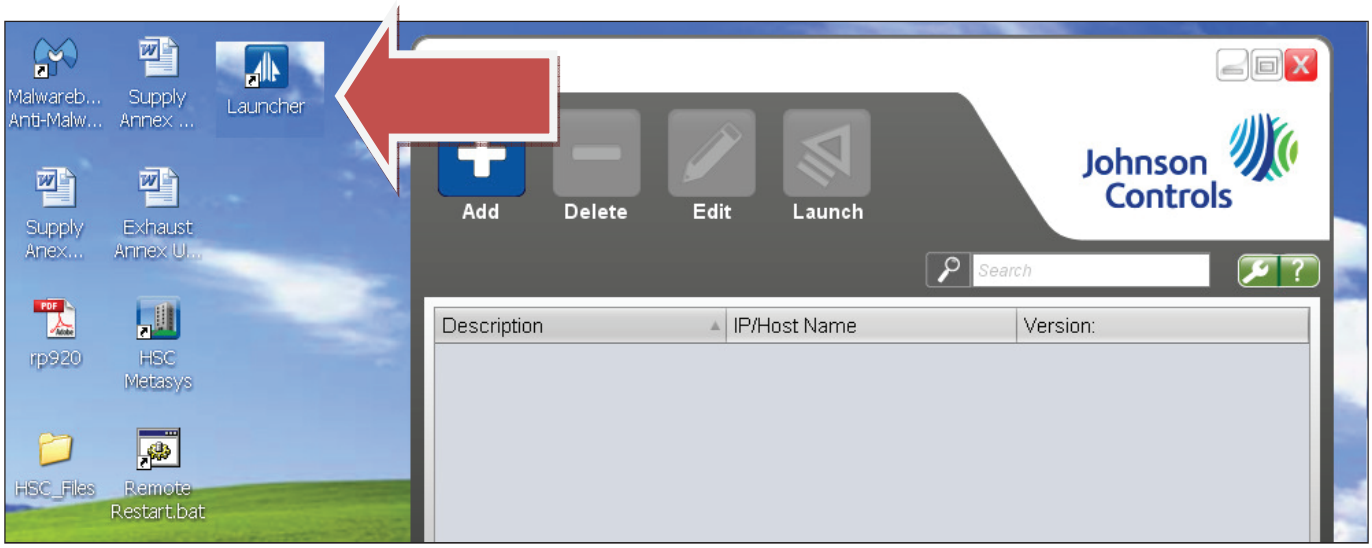

Figure 2: Desktop Launcher Icon

- Once open proceed to add your site by clicking the "Add" Button.



Figure 3: Adding a Metasys SMP to Launcher

- In the "Add New" window you can enter the Host Name or IP address of your ADS server. This will be the IP address written on the first page and depends on local or remote access. Press "Discover" to find your site and make sure your connection is working.

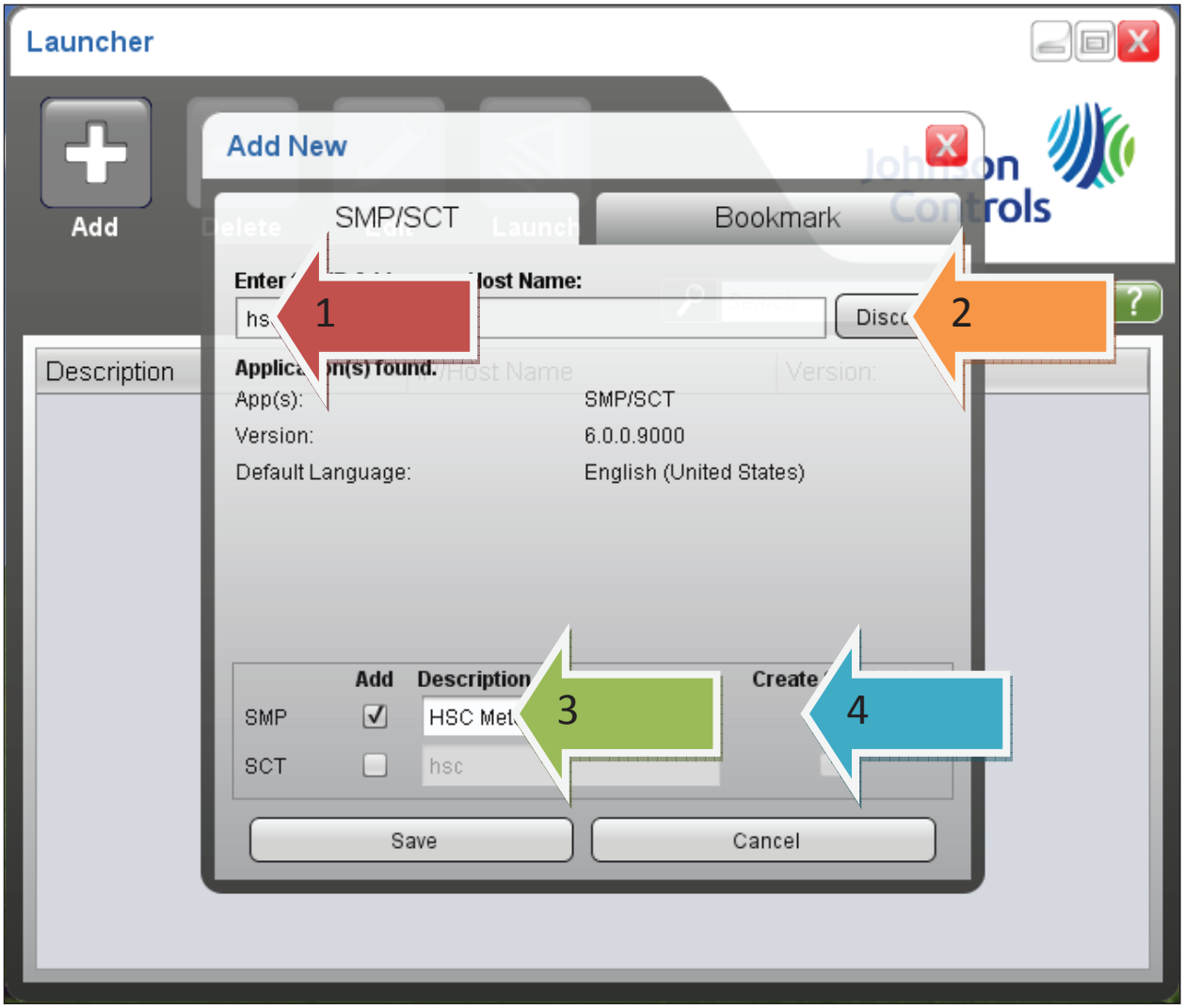

Figure 4: Launcher Add New Screen

- Once your site is found the middle section will populate with information retrieved from your site. At the bottom you can change the description and choose to create a short cut on the desktop that will be the link to your site SMP. Once ready press the save button.

- Once saved, the Launcher will download the java files required from the server. This may take a minute to download and install.

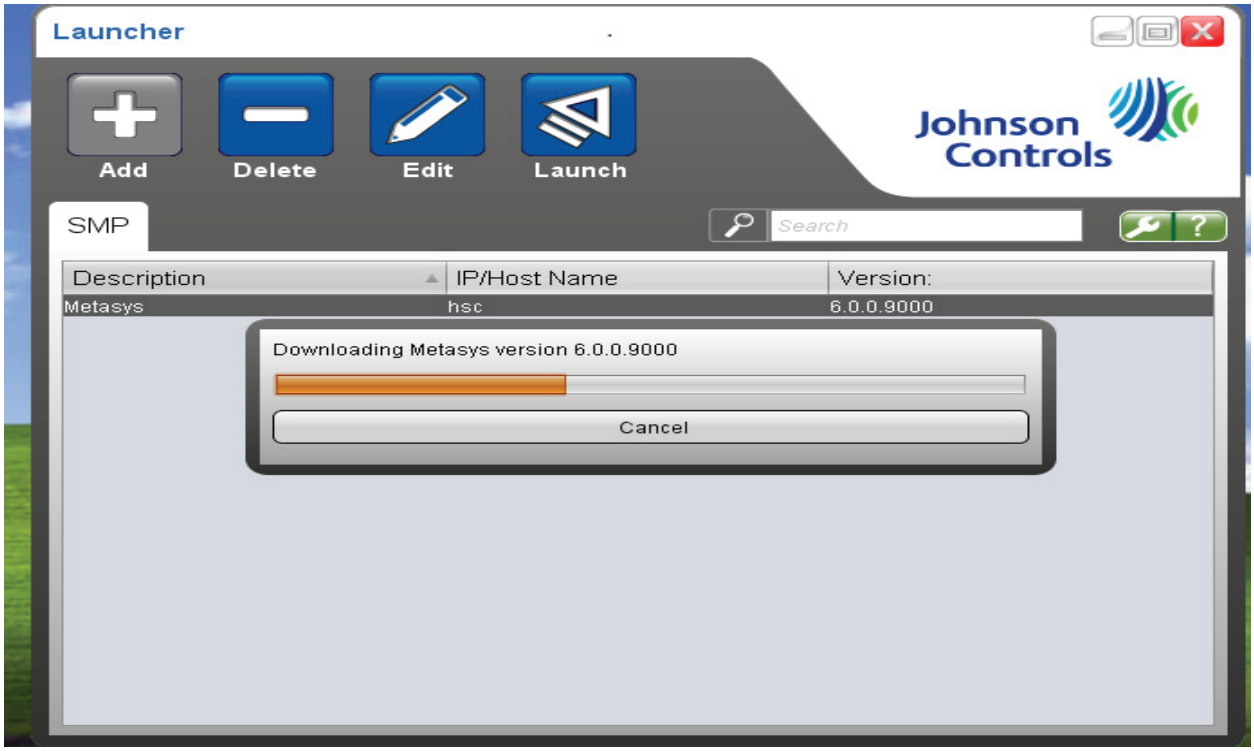

Figure 5: Downloading Private Java from Site Director

1.3. Launching your Metasys Site

- When the Site has been downloaded, your site will be shown in the Site Management Portal (SMP) tab. You can highlight and press the "Launch" button from here or use the shortcut created on your desktop. You will not have to download Metasys again on this computer.

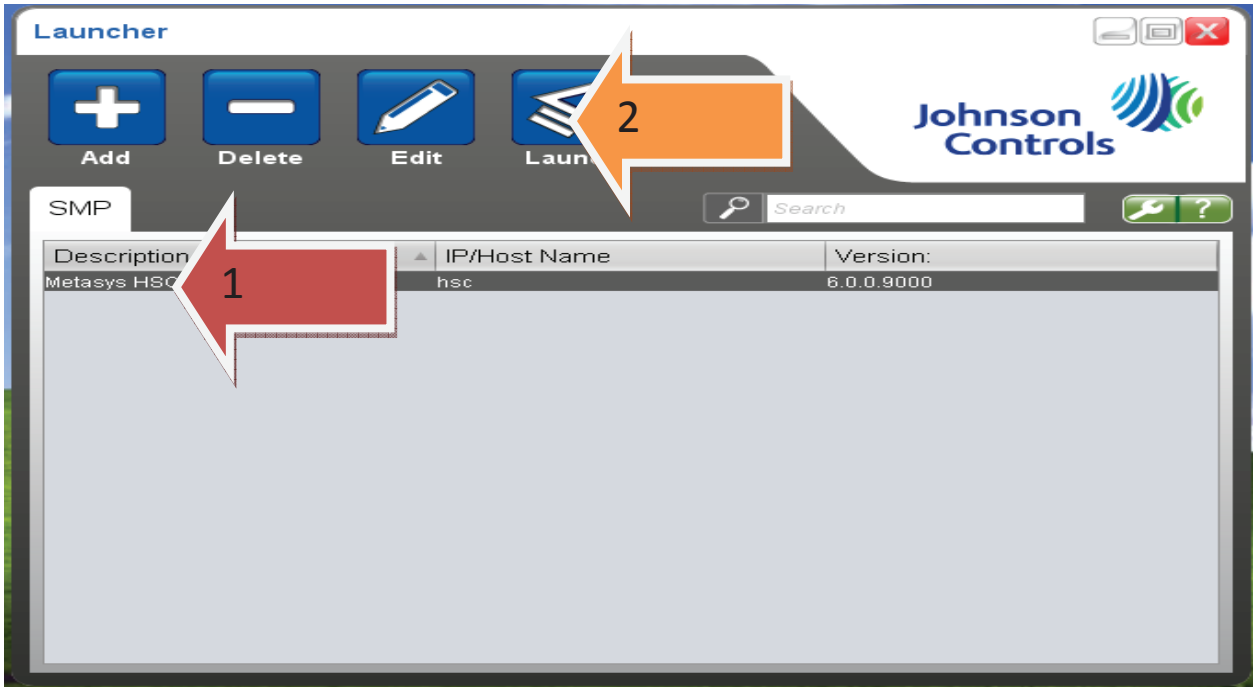

Figure 6: Launching a Site (Highlight it first)

- Normally you can just start Metasys from the desktop shortcut. The icon used will always look the same on any computer you install Launcher on.

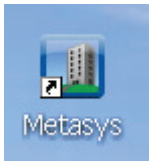

- When Metasys is Launched, You will need a username and password to login. Obtain this from the Johnson Controls rep.

1.4. Adding Bookmarks to Launcher

- When adding a site there is a tab for adding bookmarks as well. This can be used to add any website you frequently use included adding links for Metasys RAP.

2. Metasys Application Window

2.1. Metasys Symbols

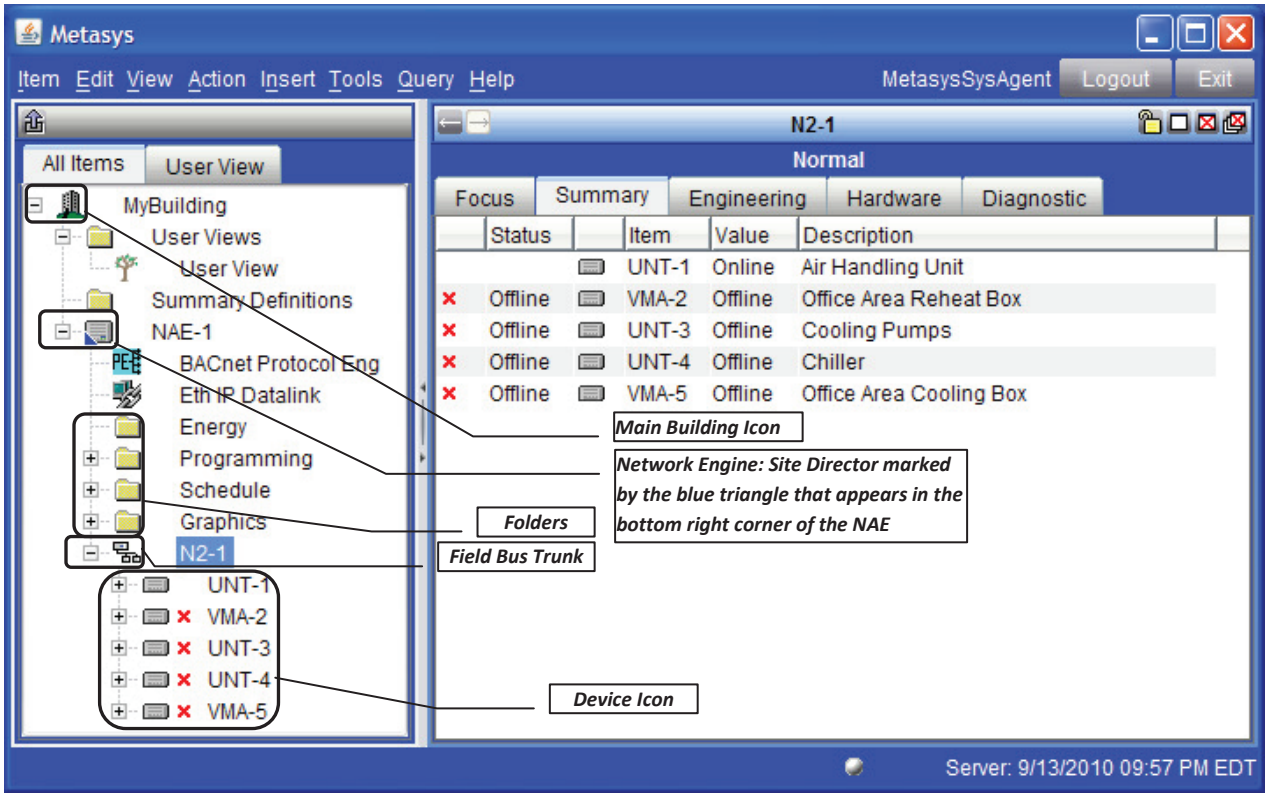

Figure 7: Displaying some of the more common symbols

- The Navigation tree and user view tabs are on the left while the focus window is on the right.
- To populate the focus window the object in the left hand window the user may:
- Select the object and then double left click this object.
- Select the object and while keeping the left mouse key pressed, move the mouse pointer to the focus window.

Symbol	Description
	Analog Input
	Analog Output
	Analog Variable
	Binary Input
	Binary Output
	Binary Variable
	Multi state Object
	Calendar Object
	Schedule Object

2.2. Panel Layout

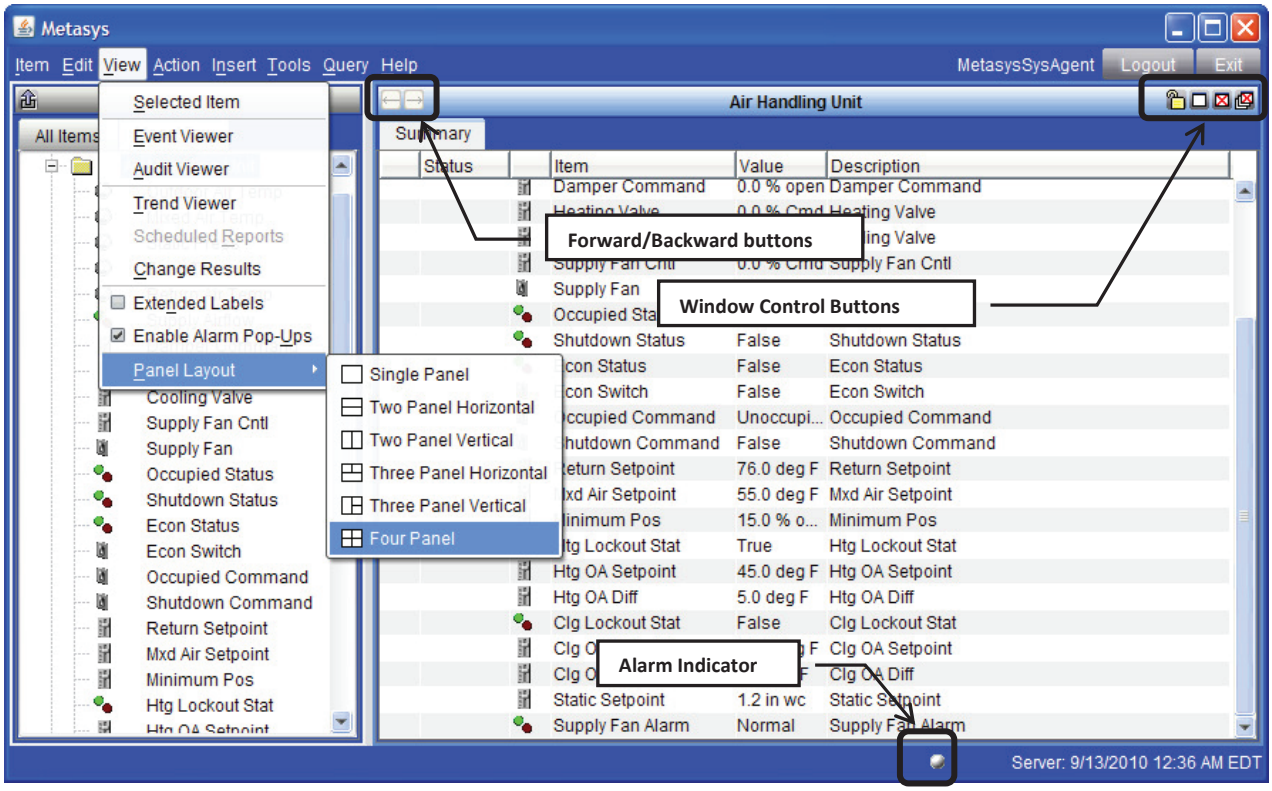

Figure 8: Panel Layout.

- To populate the focus window, a single point or folder may be either, double clicked or dragged in the right hand window.
- The panels of the focus window may be modified to view it a variety of different layouts.
- The 'Forward/Backward' navigation buttons ( ) in the top left corner of the focus window will allow the user to move back and forth up to five screens. If grayed out as seen above then the option is not available.
- The window control buttons ( ) are located in the top right corner of the focus window.
  - - Clicking on this symbol will lock the current window. Clicking on this while in the single Panel Layout mode will lock the only window into which folders and points may be brought over into.
  - - Clicking on the symbol will maximize the window. This function is only relevant when using one of the multiple panel layouts.
  - - Clicking on this symbol will close the displayed window. It will clear the contents of the window and display the previous window. If there are no nested screens the window will go blank.
  - - Clicking on the symbol will close all the focus windows that are nested within the given box, leaving a blank window.

- The Alarm Indicator () will blink red when an un-acknowledged alarm is present on the system
- In the event that the '**Snooze All**' button is clicked on the alarm pup up window that this will be indicated in the status bar as follows - 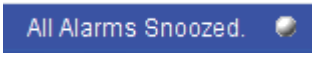

- To disable the alarm pop-ups:
  - Click on '**View**'.
  - Clear the check box beside - 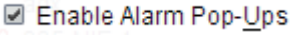

  - Once this is done it will be indicated as follows in the status bar - 
- When the pop-ups are disabled no alarms will pop up.

2.3. Password Change

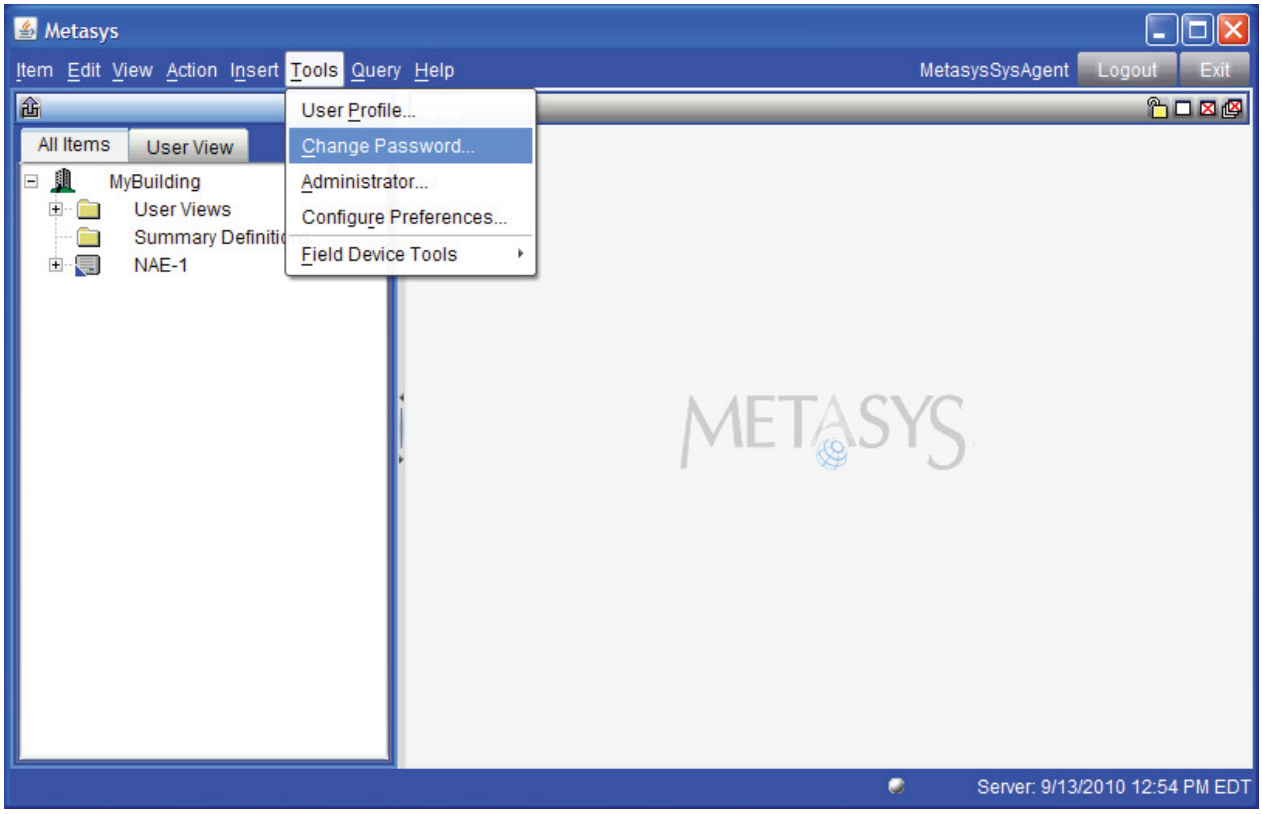

Figure 9: Changing the Metasys log in password for the current user.

- Click on '**Tools**' and then select '**Change Password…**'. If this option is grayed out then the current user does not have the privileges set to allow password change.

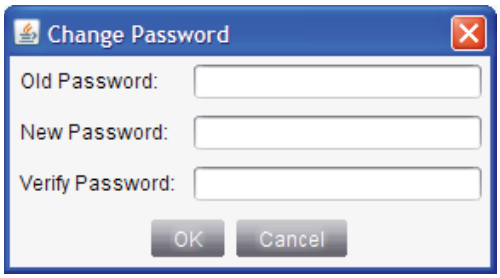

Figure 10: Password change window

- Follow the instructions – the user name is not case sensitive, but the password is.
- If a user forgets a password it can never be retrieved, the only option is for the user with administrator rights to log in and reset the password and force the user to create a new one.

3. Object Types

3.1. Analog Input

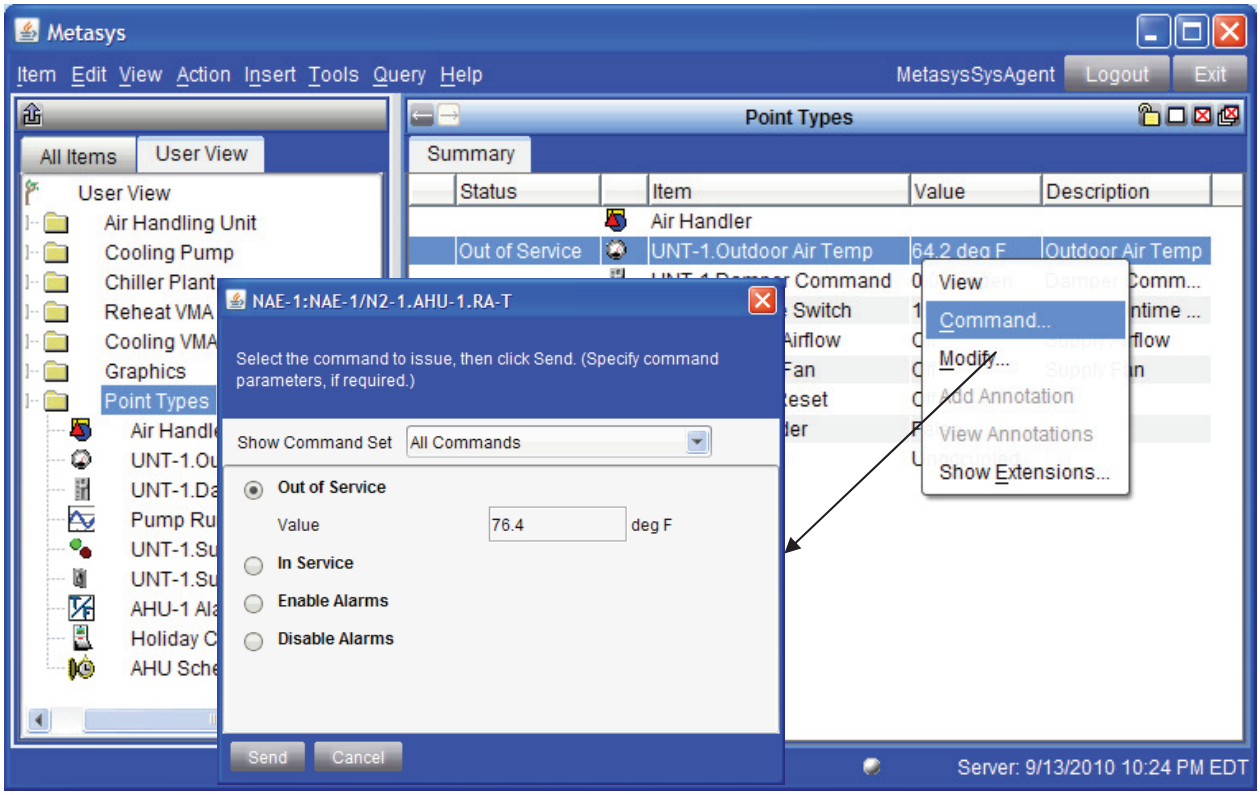

Figure 11: Analog Input

- Single left click on the analog point to select it and then right click to open up the available options. From this list clicking on '**Command…**' will open up the dialog window seen above.
- In each box there are four options:
  - '**Out of Service**'
    - This will send a manual override to the given point. If the controller to which the point is mapped will allow such a command then it will disable communication from the sensor.
    - The point must be put back 'In Service' in order to prevent potential control problems.
  - '**In Service**'
    - This will remove the manual override and allow the field device to communicate its true value back to the controller.
  - **'Enable Alarms'**
    - This will enable the alarm feature for this point.
  - '**Disable Alarms**'
    - This will disable the alarm feature for this point.

3.2. Analog Output

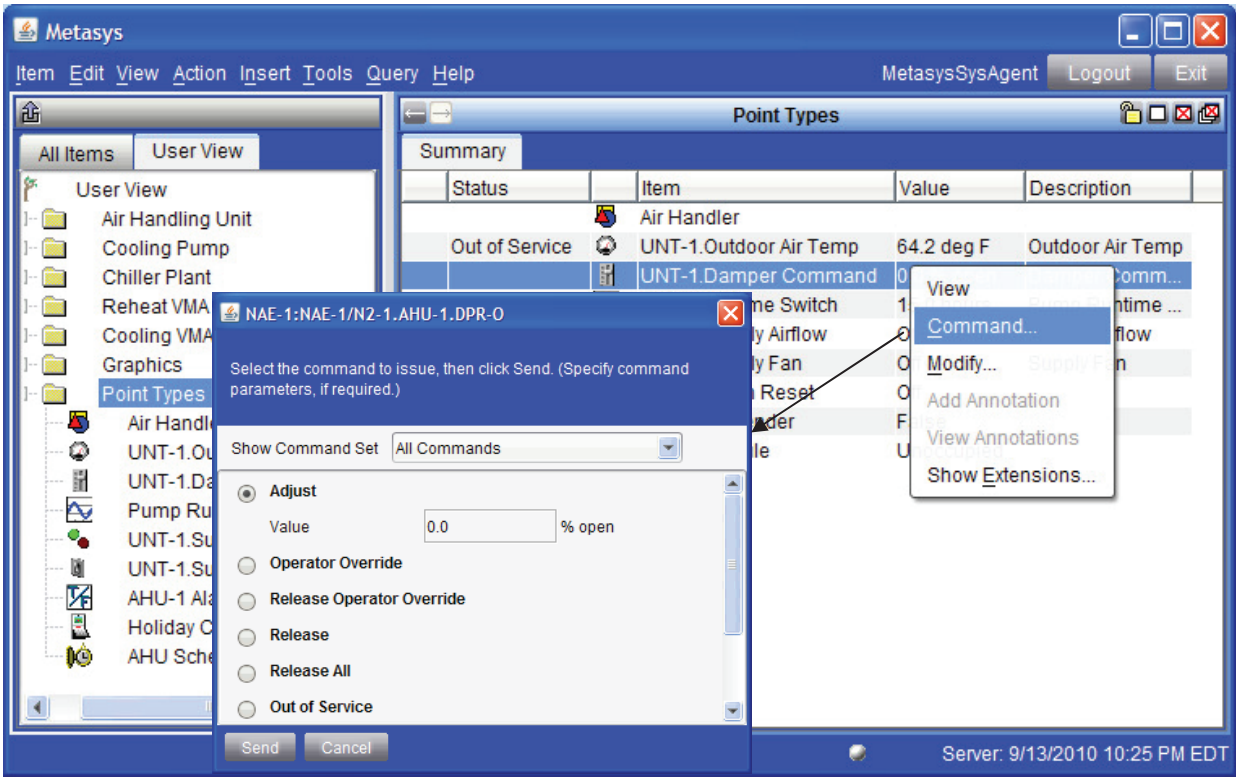

Figure 12: Analog Output

- When you select an analog output point (left-click) and then right-click the following dialog box will appear.
- There are a number of methods to command an analog output point
  - '**Adjust**'
    - The value entered here will be sent to the controller replacing the existing set point. However, if the point in question is not recommended for an 'adjust' command then you will not be able to 'send'. The example of such a point is a control valve. Adjusts are not allowed so that the field controller has priority of the command going to this point.
    - This may be used when changing setpoints on a more permenant bases.
  - '**Operator Overide'**
    - The value entered here will not replace the original value, but store it in memory while issued this commad to the point. This may be used to test a demand output.
  - '**Release Operator Override'**
    - This command when sent release the override that was issued in the previous step, retoring the the original setpoint, or releasing a point to go back into control.
  - '**Release'**
    - The 'Release' command is used to release a command that was issued at the given priority level.
  - '**Release All'**
    - The 'Release All' releases all commands setting the point back to it's default value.

3.3. Analog Variable

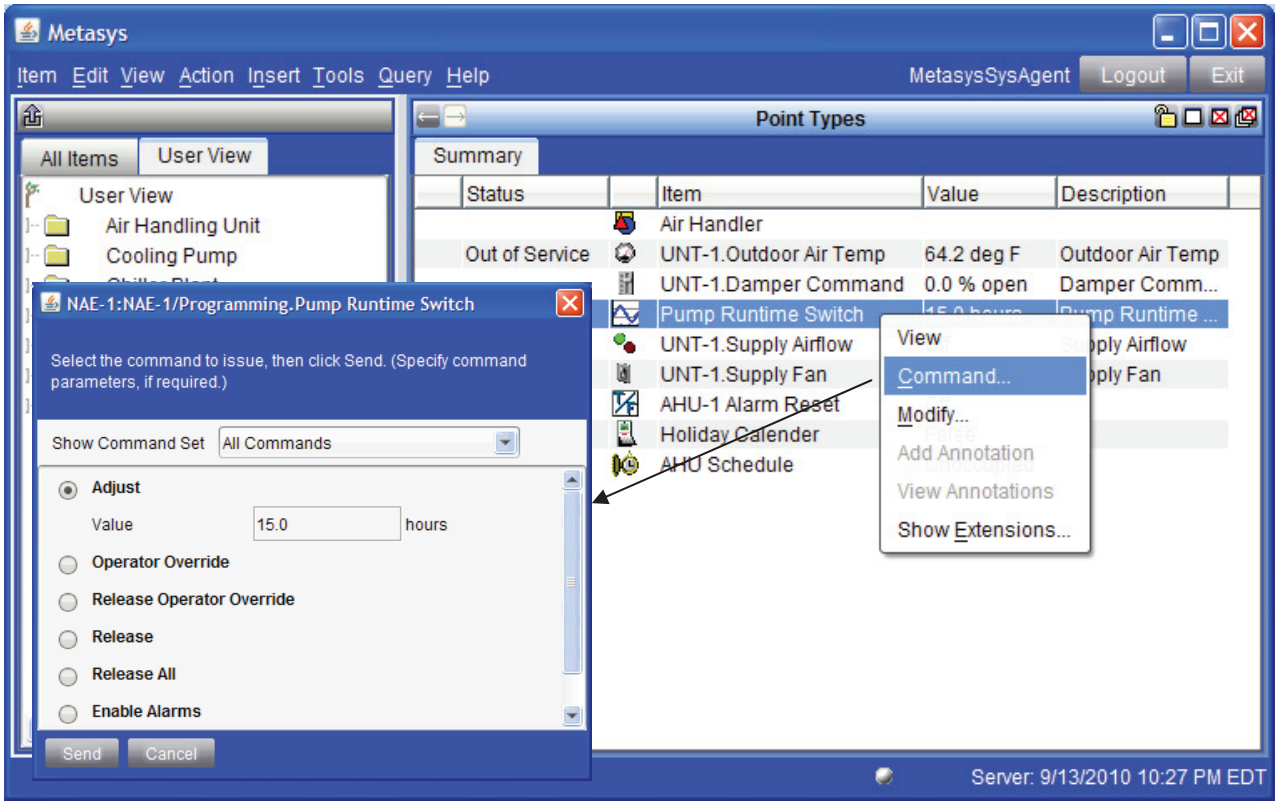

Figure 13: Analog Variable

- When you select an analog value point (left-click) and then right-click the following dialog box will appear.
- There are a number of methods to command an analog output point
  - '**Adjust**'
    - The value entered here will be sent to the controller replacing the existing set point. However, if the point in question is not recommended for an 'adjust' command then you will not be able to 'send'. The example of such a point is a control valve. Adjusts are not allowed so that the field controller has priority of the command going to this point.
    - This may be used when changing setpoints on a more permenant bases.
  - '**Operator Overide'**
    - The value entered here will not replace the original value, but store it in memory while issued this commad to the point. This may be used to test a demand output.
  - '**Release Operator Override'**
    - This command when sent release the override that was issued in the previous step, retoring the the original setpoint, or releasing a point to go back into control.
  - '**Release**'
    - The 'Release' command is used to release a command that was issued at the given priority level.
  - '**Release All'**
    - The 'Release All' releases all commands setting the point back to it's default value.

3.4. Binary Input

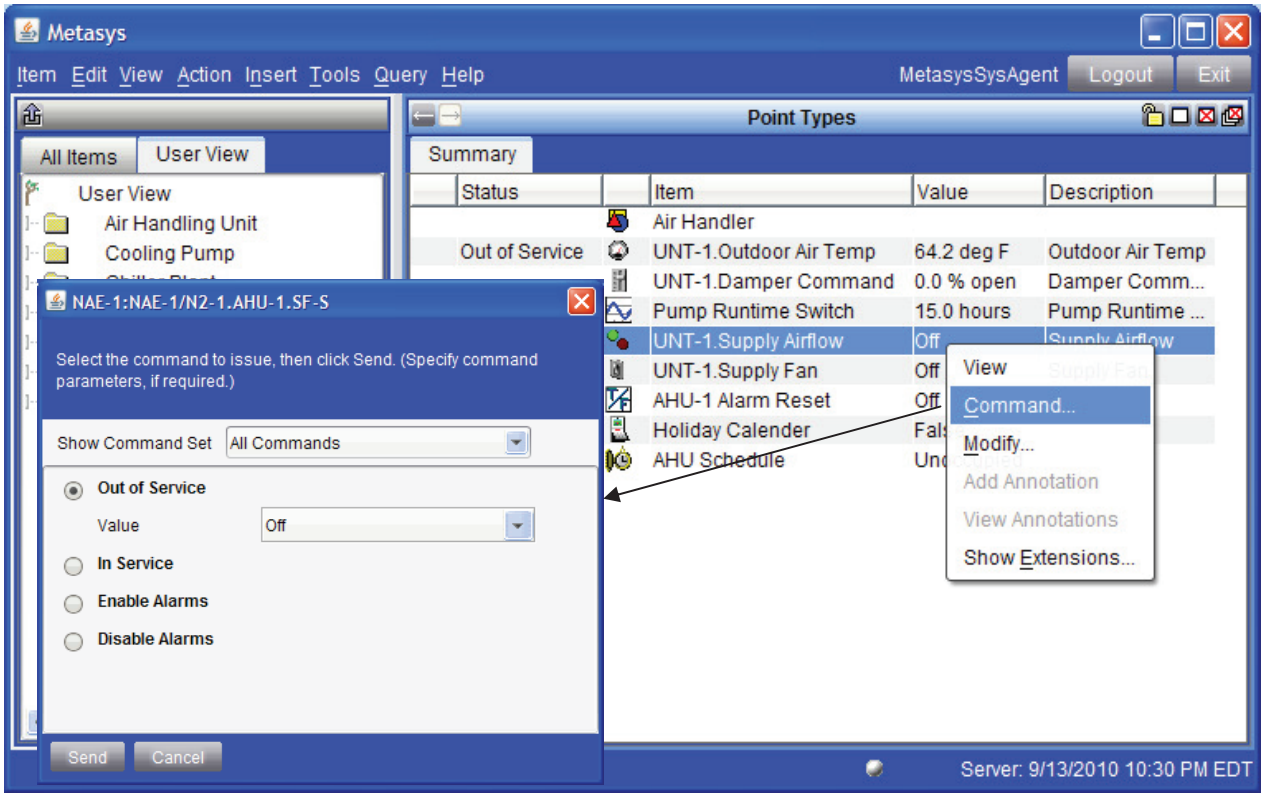

Figure 14: Binary Input

- When you select an Analog or Binary input point (left-click) and then right-click the following dialog box will appear.
- In each box there are two options:
  - **'Out of Service'**
    - This will send a manual override to the given point. If the controller to which the point is mapped will allow such a command then it will disable communication from the sensor.
    - If the point is not put back 'In Service' then there may be control problems.
  - **'In Service'**
    - This will remove the manual override and allow the field device to communicate its true value back to the controller.
  - **'Enable Alarms'**
    - This will enable the alarm feature for this point.
  - **'Disable Alarms'**
    - This will disable the alarm feature for this point.

3.5. Binary Output

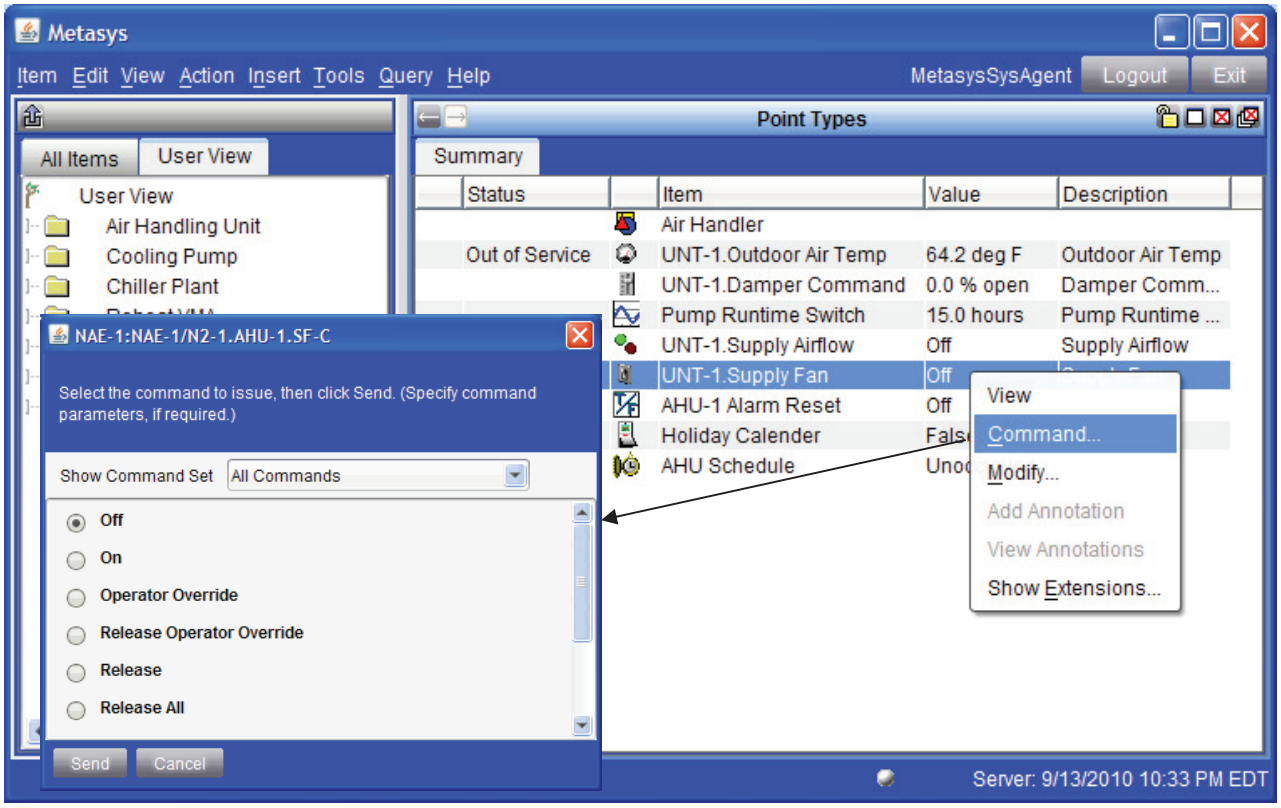

Figure 15: Binary Output

- When you select a command point (left-click) and then right-click the following dialog box will appear
- There are a number of options available:
  - The first two options, in this case 'Off' and 'On', are commands that the operator can send at the priority level 16 (lowest priority).
  - **'Operator Overide'**
    - The value entered here will not replace the original value, but store it in memory while issueing this commad to the point. This may be used to test a fan stop/start.
    - This command may be used for short term changes in commands as well.
  - **'Release Operator Override'**
    - This command when sent release the override that was issued in the previous step, retoring the the original command, or releasing the point to go back on to control.
  - **'Release'**
    - The 'Release' command is used to release a command that was issued at the given priority level.
  - **'Release All'**
    - The 'Release All' releases all commands setting the point back to it's default value.

3.6. Binary Variable

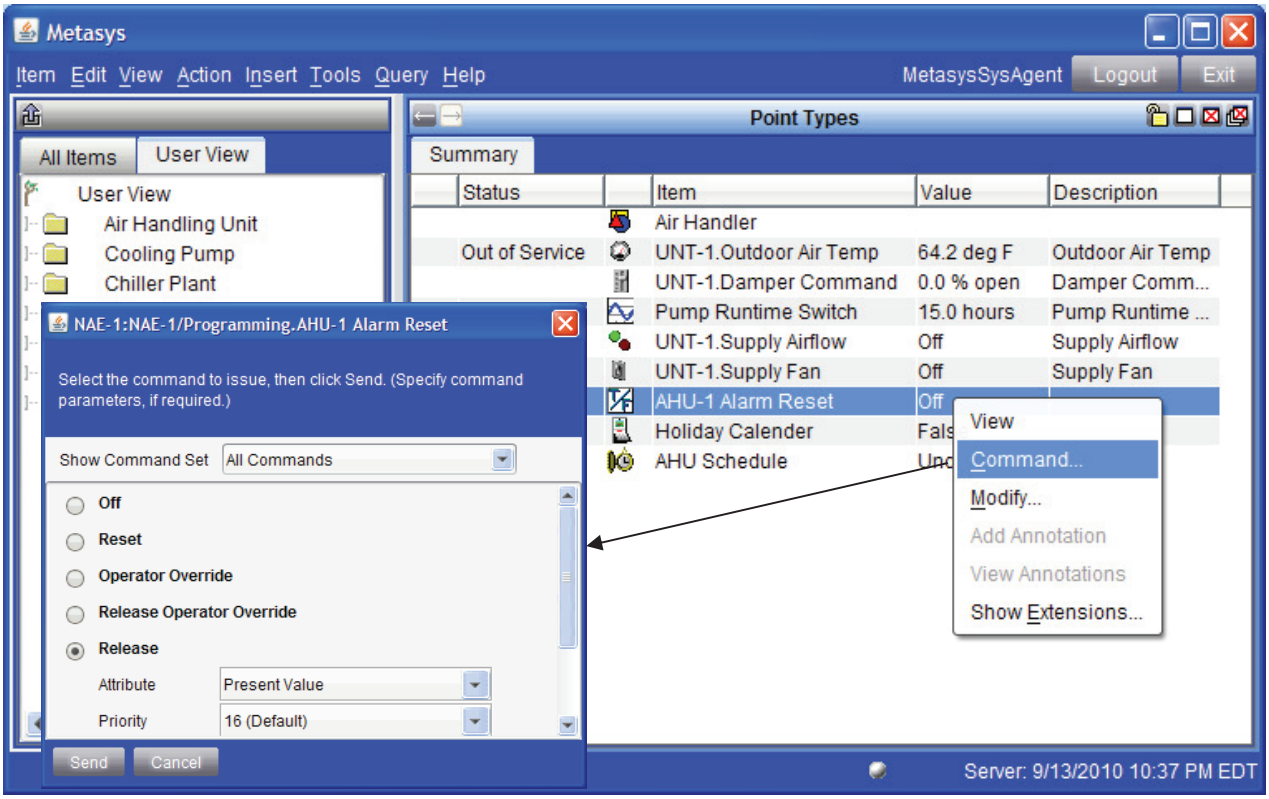

Figure 16: Binary Variable

- When you select a Binary Value point (left-click) and then right-click the following dialog box will appear
- There are a number of options available:
  - The first two options, in this case '**Off**' and '**On**', are commands that the operator can send at the priority level 16 (lowest priority).
  - '**Operator Overide'**
    - The value entered here will not replace the original value, but store it in memory while issueing this commad to the point. This may be used to test a fan stop/start.
    - This command may be used for short term changes in commands as well.
  - '**Release Operator Override'**
    - This command when sent release the override that was issued in the previous step, retoring the the original command, or releasing the point to go back on to control.
  - '**Release**'
    - The 'Release' command is used to release a command that was issued at the given priority level.
  - '**Release All'**
    - The 'Release All' releases all commands setting the point back to it's default value.

4. Object Extensions

4.1. Adding a Trend Extension to an Analog Object:

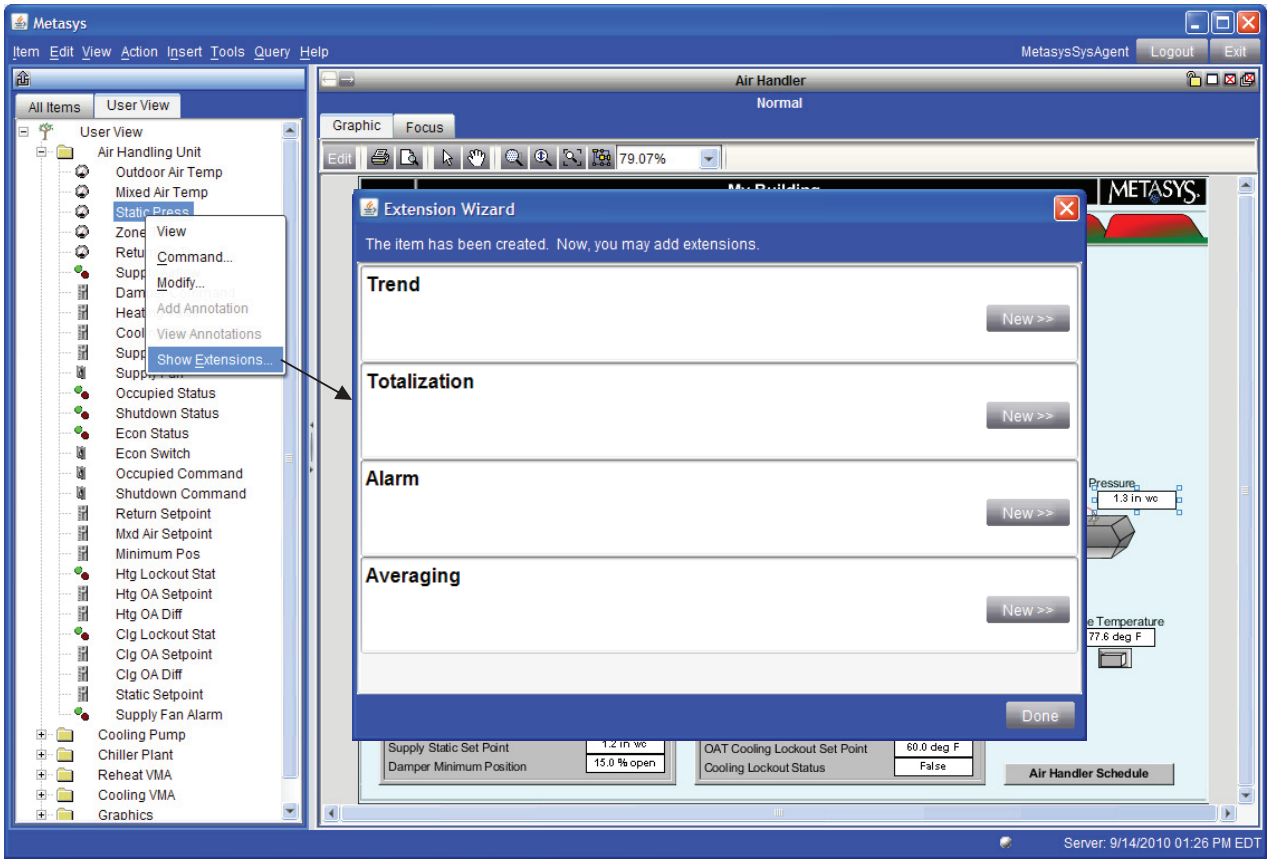

Figure 17: Viewing the extension wizard on an analog object

- To add a trend to an Analog Object select the '**User View**' tab where the system resides. Navigate into the system folder and single left click on the point in question.
- When the '**Extension Wizard**' dialog box opens click on '**New**' in the '**Trend**' section of the window.

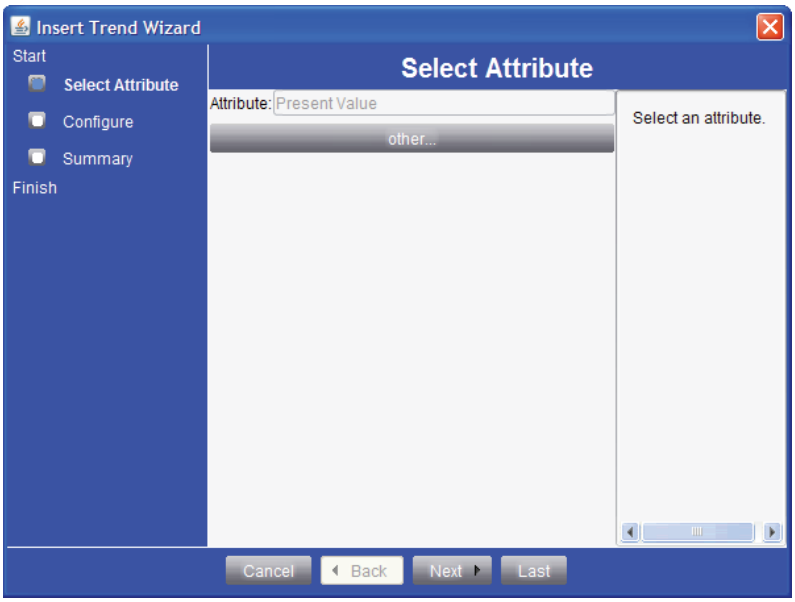

Figure 18: Selecting the attribute to be trended.

- If the trend to be collected is for the '**Present Value**' for the point then no changes need to be made at this stage. Click on '**Next**'.

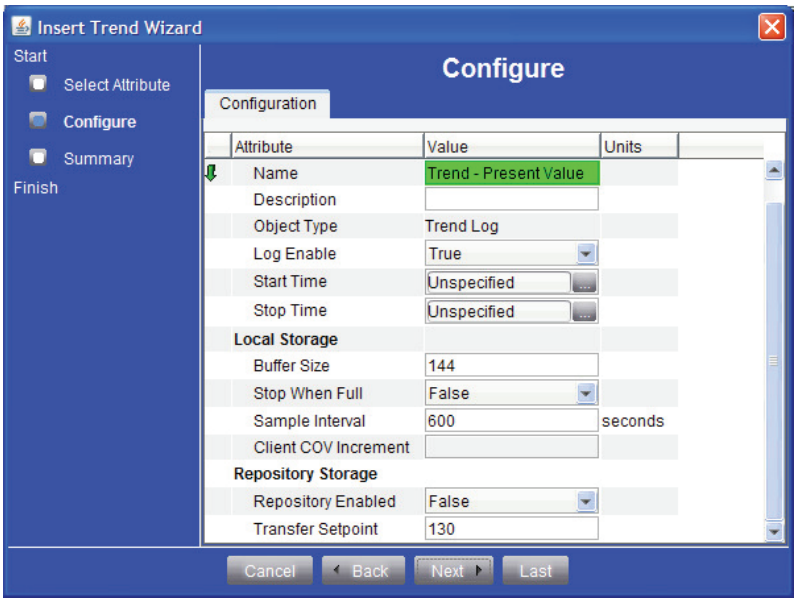

Figure 19: Configuration Page of an analog Trend object

- The trended data resides in the NAE and the number of trends being kept is defined by the '**Buffer Size**'.
- Set the '**Sample Interval**' for the trend, the system defaults to 5 minutes – 600 seconds. For a trend similar to those in the old PMI system, use an interval of 1800 seconds with a buffer size of 48 and transfer setpoint of 43.
- Set '**Repository Enabled**' to '**True**' only if a server exists. The system defaults to '**False**', leave it as such if this is site has NAE's only.
- In the event that a server exists the trend data is sent to the server when the number of samples reaches the '**Transfer Setpoint**'

- Click '**Next**' when the configuration is complete.

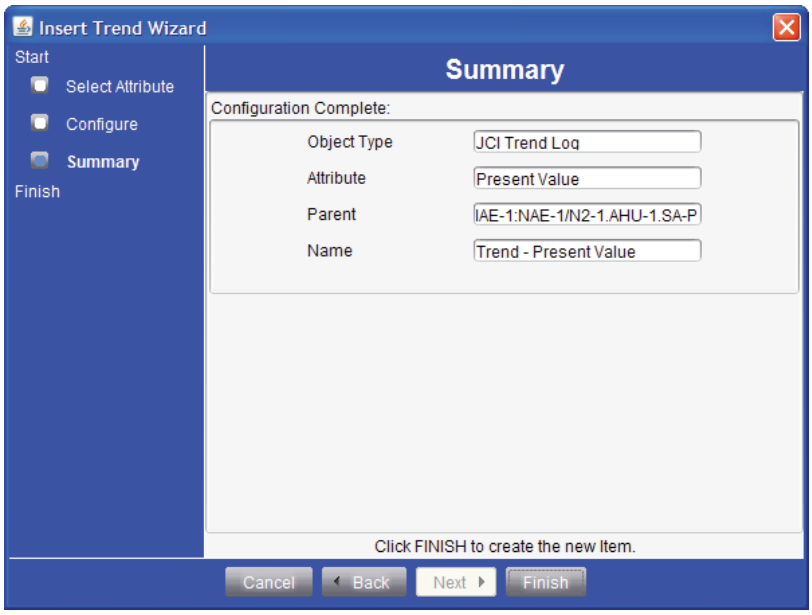

Figure 20: Finishing Trend creation...

- To complete the trend creation click on '**Finish**'.

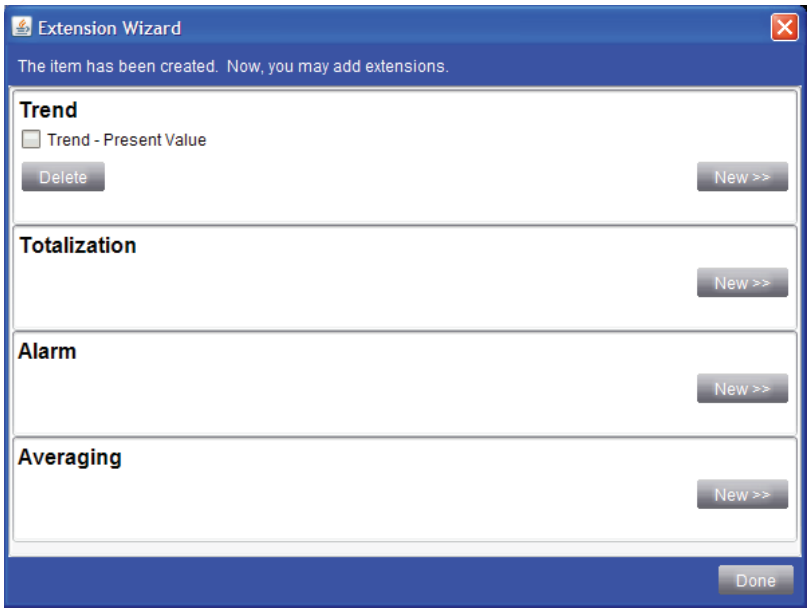

Figure 21: Extension Wizard box after the creation

- The '**Extension Wizard**' box re-appears and the newly added trend appears in the Trend section. Click '**Done**' to close the wizard.
- **NOTE:** Any extension may be deleted by checking the box beside the extension name and then clicking on '**Delete**'. If a Trend is deleted any data not transferred to the Server will be lost.

4.2. Adding a Trend Extension to a Binary Object:

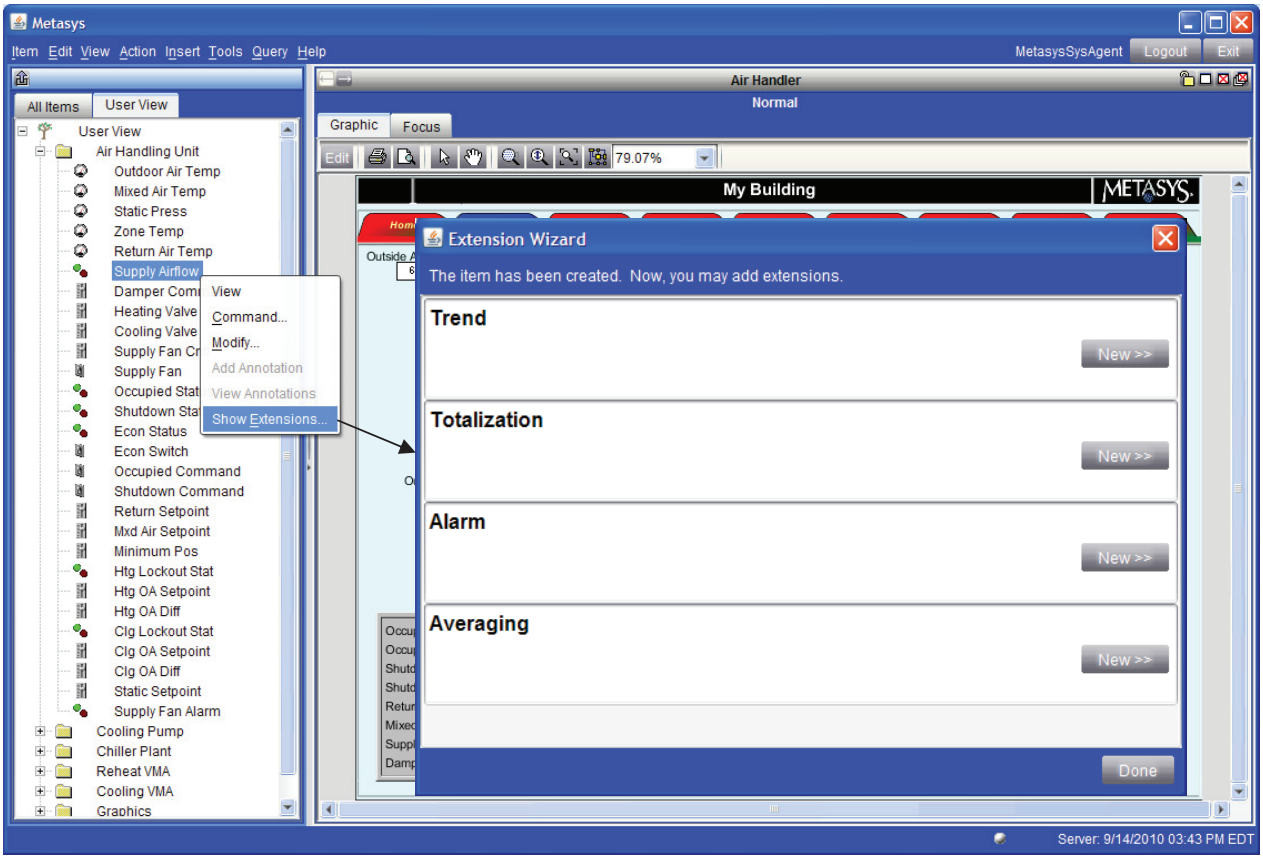

Figure 22: Viewing the extension wizard on a binary object

- To add a trend to a Binary Object select the '**User View**' tab where the system resides. Navigate into the system folder and single left click on the point in question.
- When the '**Extension Wizard**' dialog box opens click on '**New**' in the '**Trend**' section of the window.

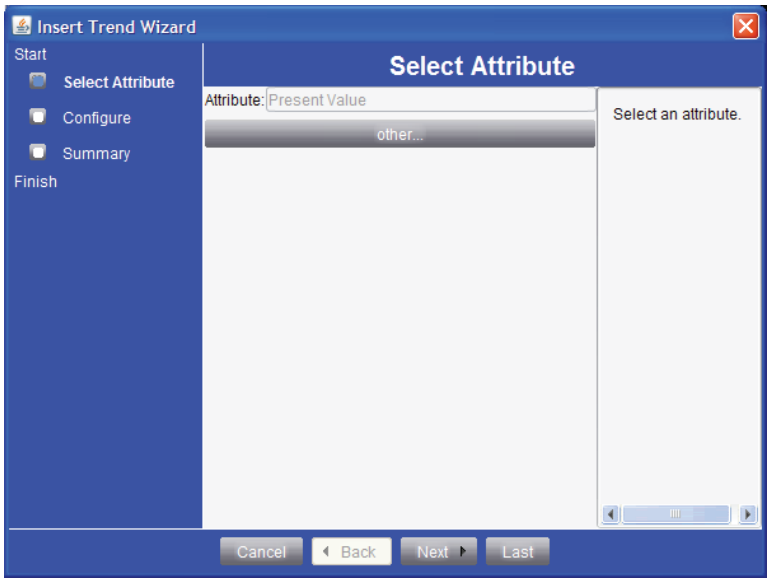

Figure 23: Selecting the attribute to be trended

- If the trend to be collected is for the '**Present Value**' for the point then no changes need to be made at this stage. Click on '**Next**'.

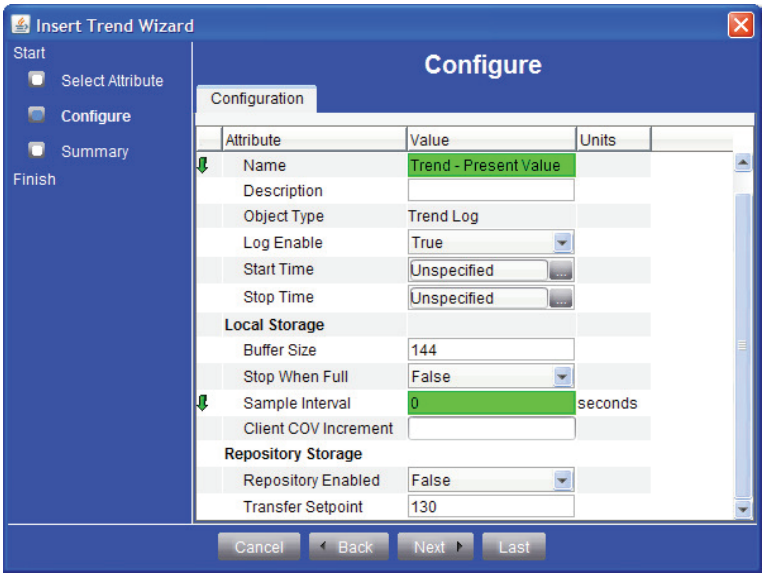

Figure 24: Configuration Page of an analog Trend object

- The trended data resides in the NAE and the number of trends being kept is defined by the '**Buffer Size**'.
- Set the '**Sample Interval**' for the trend to '**0**' to record the instance that the point changes state, the system defaults to 5 minutes – 600 seconds.
- Set '**Repository Enabled**' to '**True**' only if a server exists. The system defaults to '**False**', leave it as such if this is site has NAE's only.
- In the event that a server exists the trend data is sent to the server when the number of samples reaches the '**Transfer Setpoint**'. For a Binary Point, the Buffer size should be 10 and transfer setpoint 9.
- Click '**Next**' when the configuration is complete

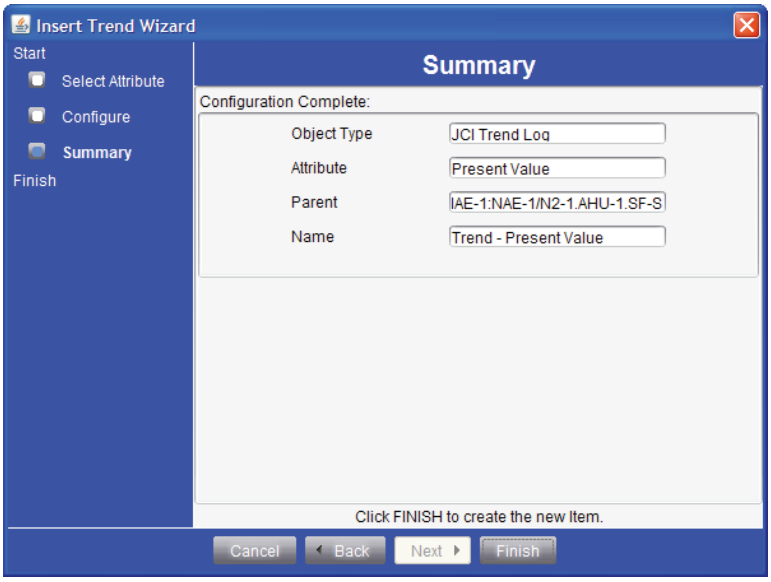

Figure 25: Finishing Trend creation...

- To complete the trend creation click on '**Finish**'

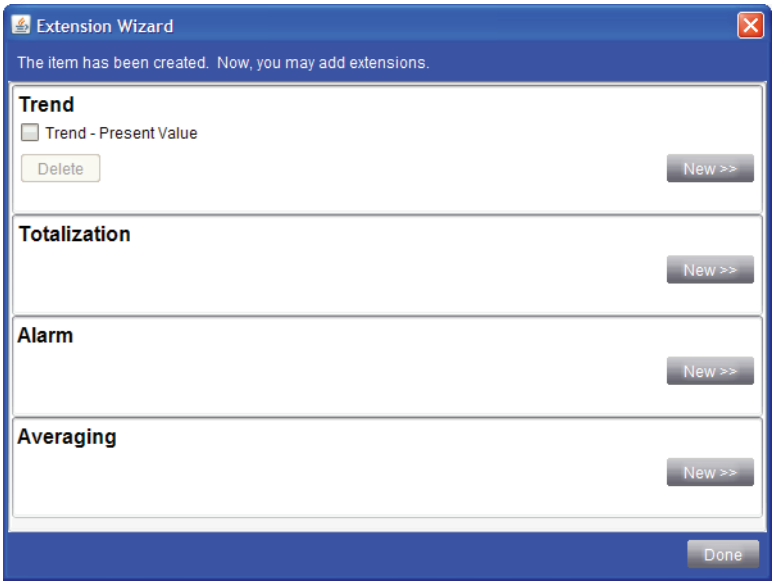

Figure 26: Extension Wizard box after the creation

- The '**Extension Wizard**' box re-appears and the newly added trend appears in the Trend section. Click '**Done**' to close the wizard.
- **NOTE:** Any extension may be deleted by checking the box beside the extension name and then clicking on '**Delete**'. If a Trend is deleted any data not transferred to the Server will be lost.

4.3. Adding an Alarm Extension to an Analog Object:

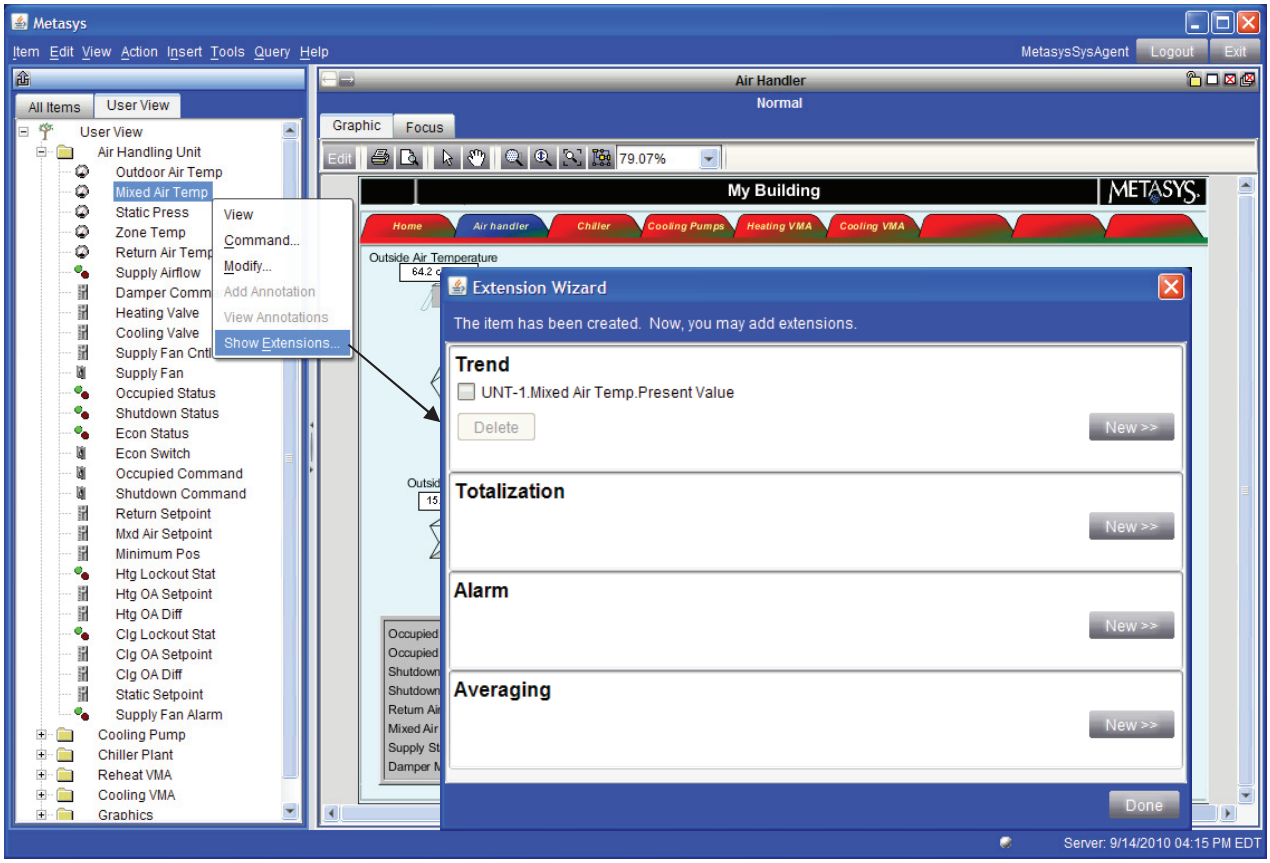

Figure 27: Viewing the extension wizard on an analog object

- To add an alarm to an Analog Object select the '**User View**' tab where the system resides. Navigate into the system folder and single left click on the point in question.
- When the '**Extension Wizard**' dialog box opens click on '**New**' in the '**Alarm**' section of the window.

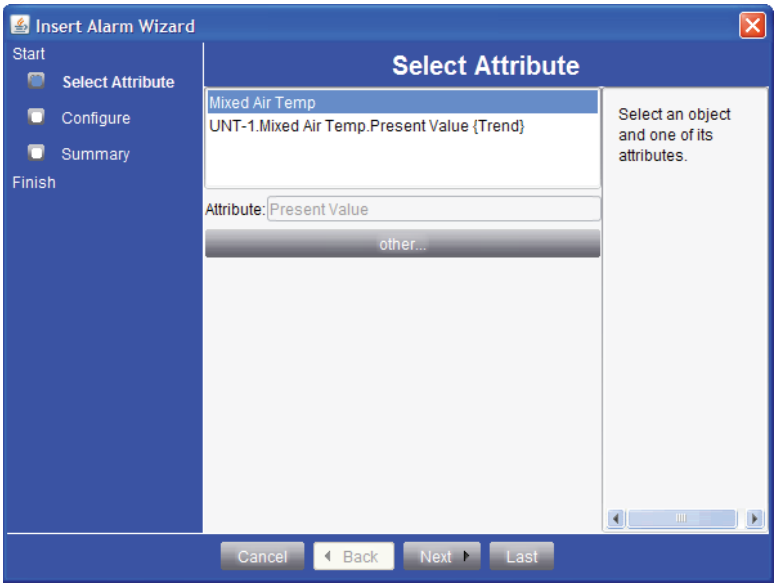

Figure 28: Selecting the attribute to be monitored.

- If the alarm is to monitor the '**Present Value**' for the point then no changes need to be made at this stage. Click on '**Next**'.

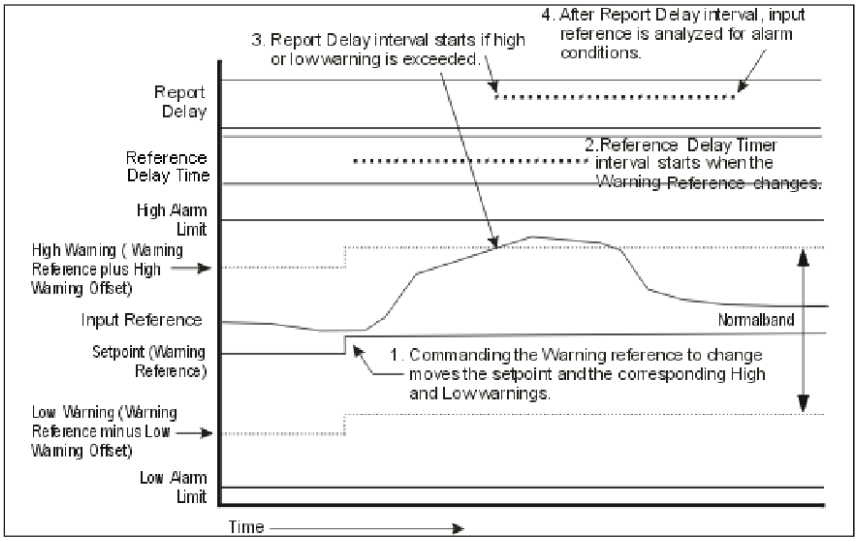

Figure 29: Alarm Delay interaction (LIT1201793 pg130)

Delay Timer Interaction

There are two timers used to delay the analysis or reporting of an alarm. These timers are used to allow normal functions to occur before an object's behavior appears abnormal and generates an alarm. The first timer is the **Alarm State: Reference Delay Timer**, which allows a preset amount of time to pass between commanding an object and making sure that the commanded object has obeyed the command before considering an alarm condition to be present. The second timer is the **Alarm State: Report Delay Timer**, which prevents the analysis of an object's condition until the preset time has passed after that object has appeared to obey a command.

The length of the reference delay time is a combination of the reference delay time and the report delay time settings. If you change the warning reference, both delays go active and if the reference delay time is greater than or equal to the report delay time, then the total delay is the sum of both timer settings; however, if the reference delay time is less than the report delay time, then the delay is equal to the report delay time setting.

The delay timers of the alarm extensions interact as follows:

Note: If no Warning Limits are defined, the Reference Delay Time and Reference Delay Timer Active attributes do not apply.

Figure 30: Excerpt regarding Alarm delays from LIT 1201793 pg129

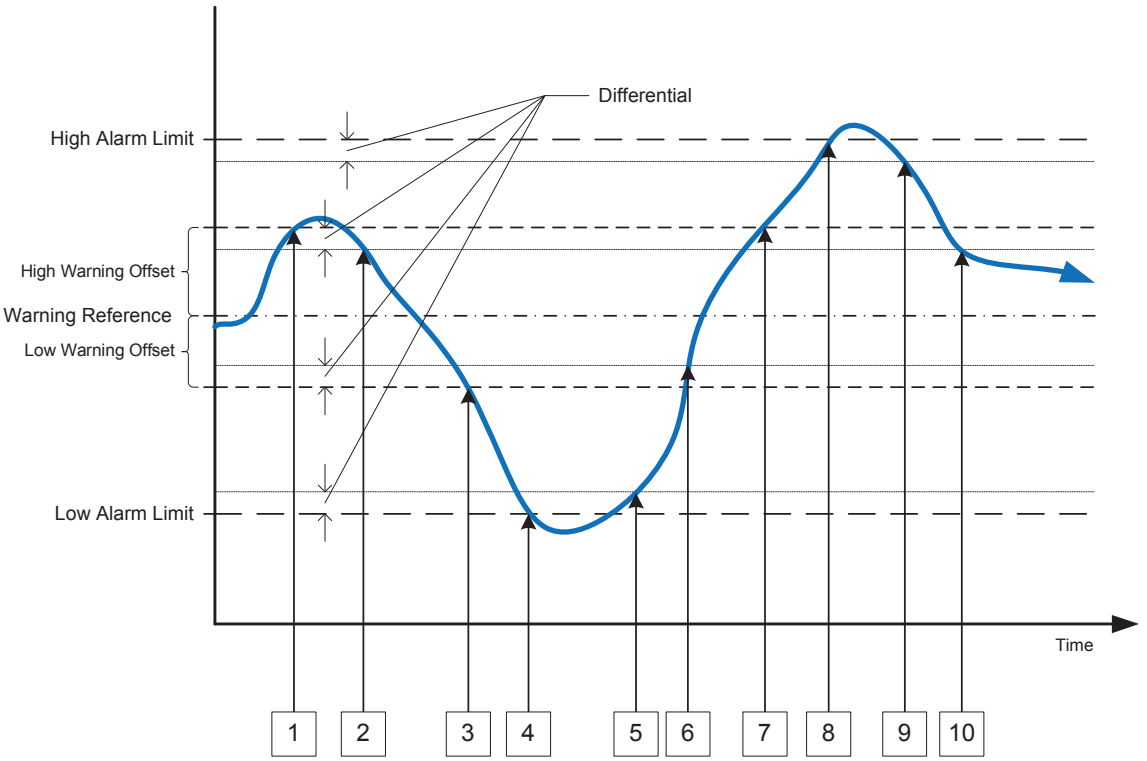

Point	Flags	Timer Interaction	Change Of Point Status
1	High Warning Flag Set	Reference Delay Timer Activated	Normal to High Warning
2	High Warning Flag Released	Reference Delay Timer Released	High Warning to Normal
3	Low Warning Flag Set	Reference Delay Timer Activated	Normal to Low Warning
4	Low Alarm Flag Set	Alarm Delay Timer Activated	Low Warning to Low Alarm
5	Low Alarm Flag Released	Alarm Delay Timer Released	Low Alarm to Low Warning
6	Low Warning Flag Released	Reference Delay Timer Released	Low Warning to Normal
7	High Warning Flag Set	Reference Delay Timer Activated	Normal to High Warning
8	High Alarm Flag Set	Alarm Delay Timer Activated	High Warning to High Alarm
9	High Alarm Flag Released	Alarm Delay Timer Released	High Alarm to High Warning
10	High Warning Flag Released	Reference Delay Timer Released	High Warning to Normal

Figure 25a: The above shows the interaction between the analog point and the various warning and alarm limits.

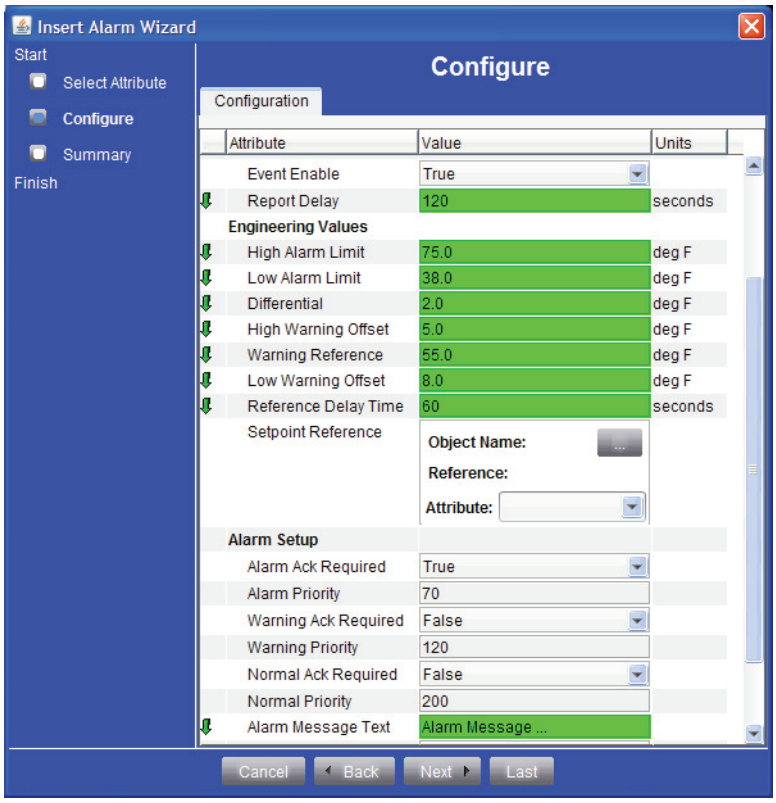

Figure 31: Configuration page

- '**Report Delay**' is the timer that must time out before the Alarm Pop Up is generated.
- '**High Alarm Limit**' is analog level at which a **High Alarm** is triggered for the object.
- '**Low Alarm Limit**' is analog level at which a **Low Alarm** is triggered for the object.
- '**Differential**' see Figure 26.
- '**High Warning Offset**' value by which the analog object must rise above the **Warning Reference** to trigger a **High Warning** for the object.
- '**Warning Reference**' the normal value for the Analog Object.
- '**Low Warning Offset**' value by which the analog object must drop below the **Warning Reference** to trigger a **Low Warning** for the object.
- '**Reference Delay Time**' is the timer that must time out before a warning flag is set.
- '**Alarm Message Text**' is the message that would appear in the pop up alarm box. This can also appear in emails/pager alarms if selected to do so.
- Click on '**Last**' once the configuration is complete.

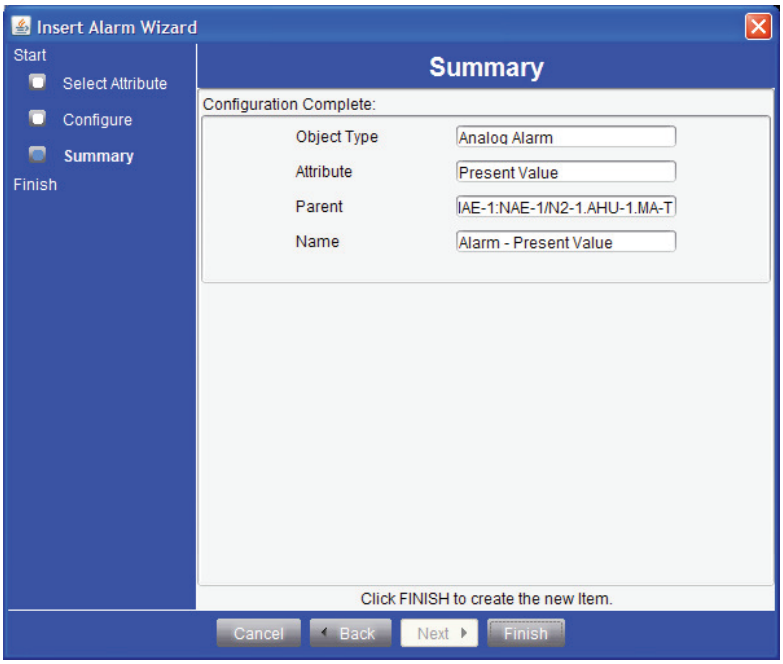

Figure 32: Finishing Alarm creation...

- To complete the trend creation click on '**Finish**'



Figure 33: Extension Wizard box after the creation

- The '**Extension Wizard**' box re-appears and the newly added alarm appears in the Alarm section. Click '**Done**' to close the wizard.

4.4. Adding an Alarm Extension to a Binary Object:

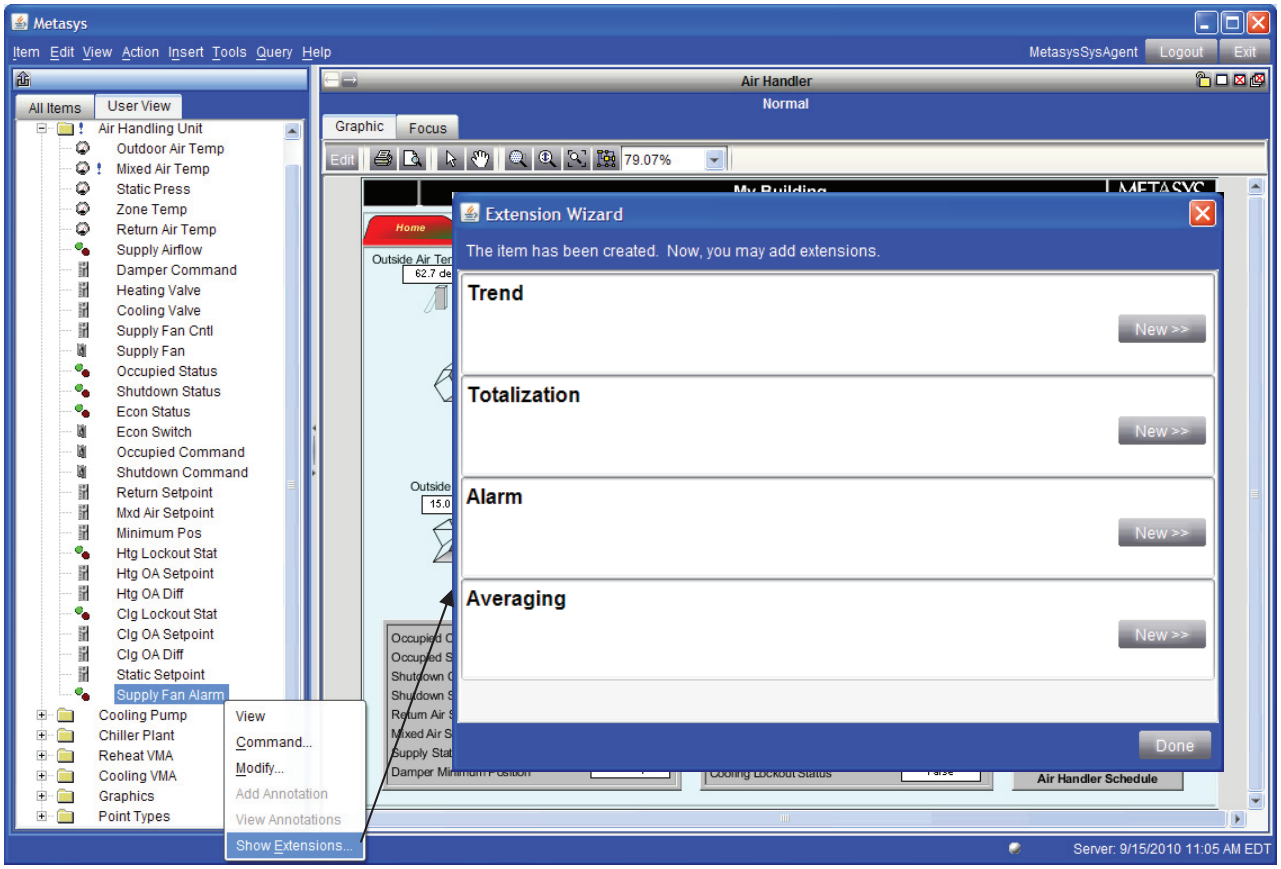

Figure 34: Viewing the Extensions of a Binary Object

- To add an alarm to a Binary Object select the '**User View**' tab where the system resides. Navigate into the system folder and single left click on the point in question.
- When the '**Extension Wizard**' dialog box opens click on '**New**' in the '**Alarm**' section of the window.

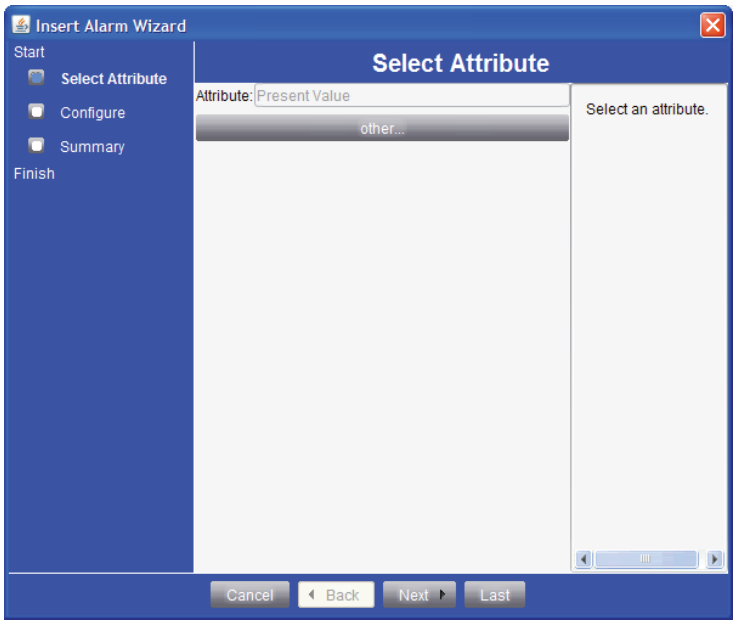

Figure 35: Selecting the attribute to be monitored.

- If the alarm is to monitor the '**Present Value**' for the point then no changes need to be made at this stage. Click on '**Next**'.

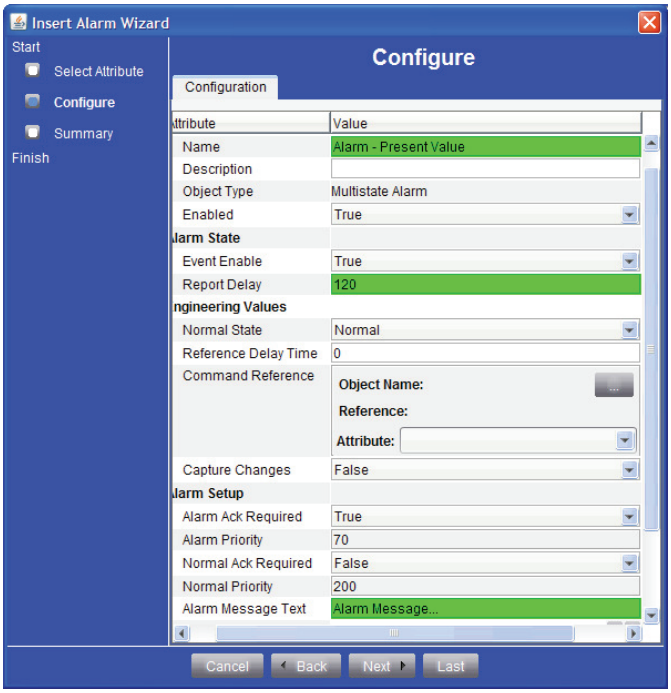

Figure 36: Binary Alarm Configuration Page

- '**Report Delay**' is the timer that must time out before the Alarm Pop Up is generated.
- '**Normal State**' is the state the point must be in to keep the status as '**Normal**'.
- '**Reference Delay Time**' is the timer that must time out before the '**Report Timer**' is activated.
- '**Alarm Message Text**' is the message that would appear in the pop up alarm box.
- Click on '**Last**' once the configuration is complete.

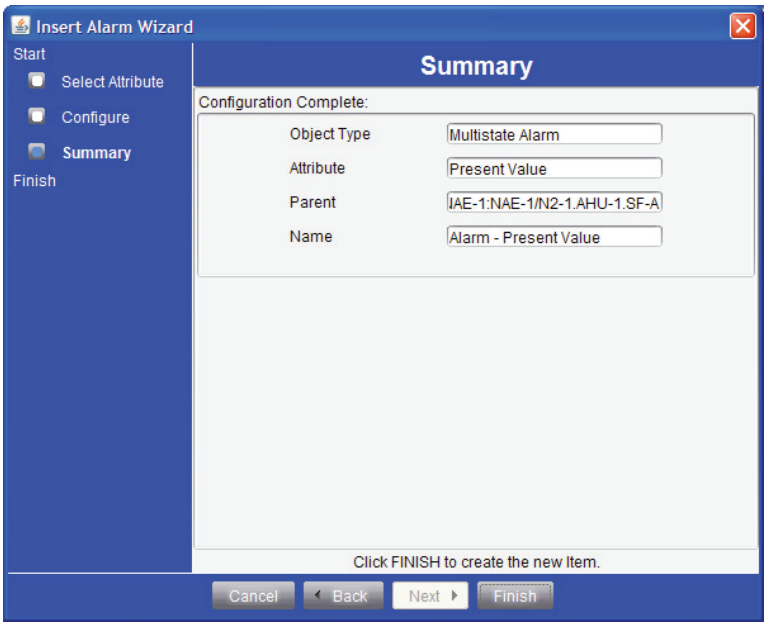

Figure 37: Finishing Alarm creation...

- To complete the trend creation click on '**Finish**'

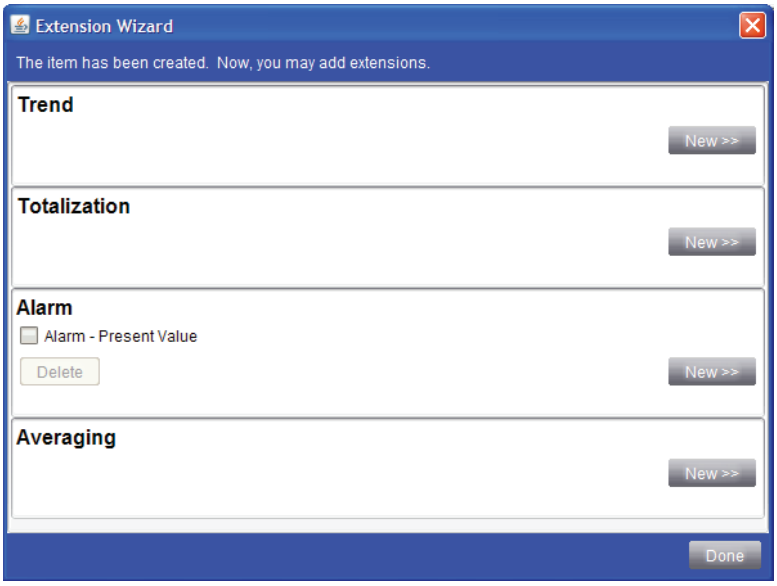

Figure 38: Extension Wizard box after the creation

- The '**Extension Wizard**' box re-appears and the newly added alarm appears in the Alarm section. Click '**Done**' to close the wizard.

4.5. Adding a Totalization Extension to an Analog Object:

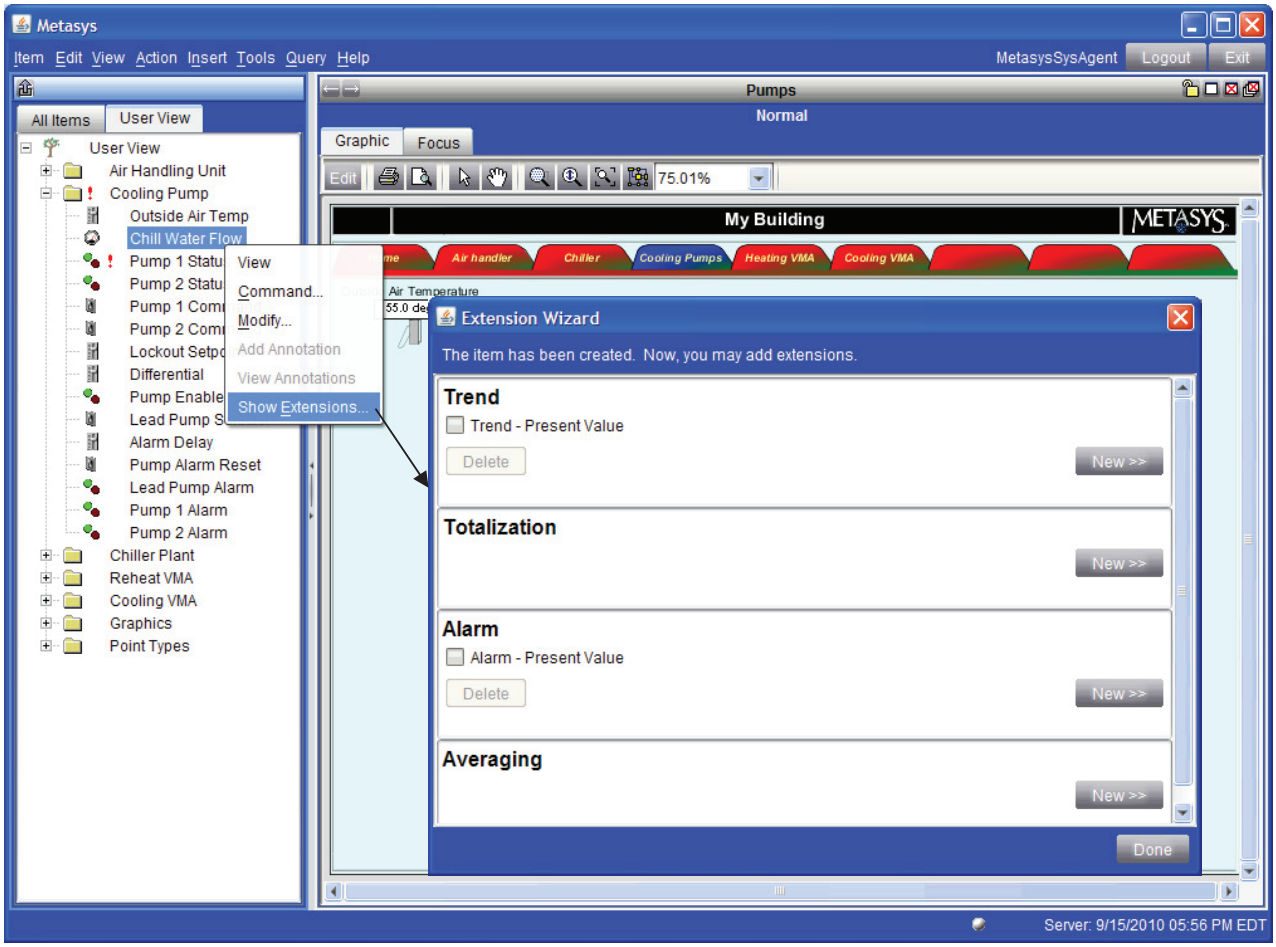

Figure 39: Viewing the Extension Wizard for an Analog Point

- To add a Totalization to an Analog Object select the '**User View**' tab where the system resides. Navigate into the system folder and single left click on the point in question.
- When the '**Extension Wizard**' dialog box opens click on '**New**' in the '**Totalization**' section of the window.

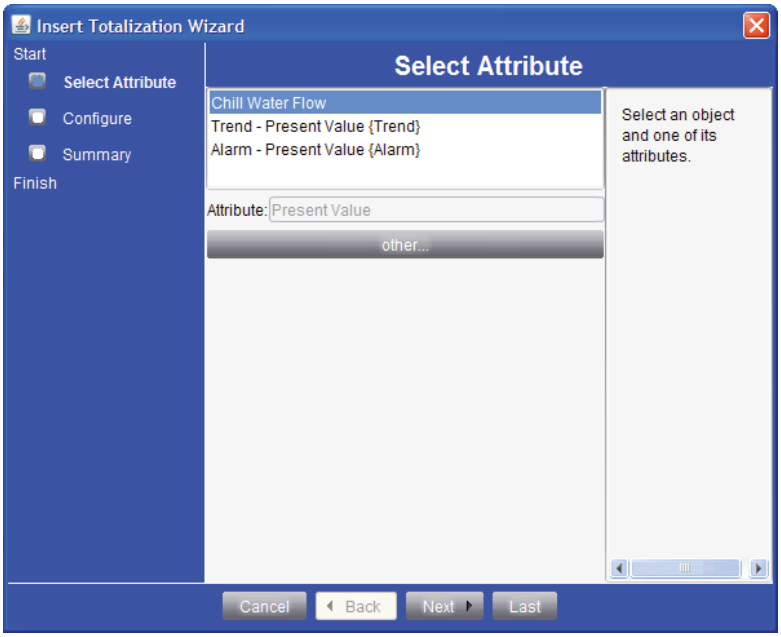

Figure 40: Selecting the attribute to be totalized

- Select the '**Present Value**' from the list of attributes and then click on '**Next**'.

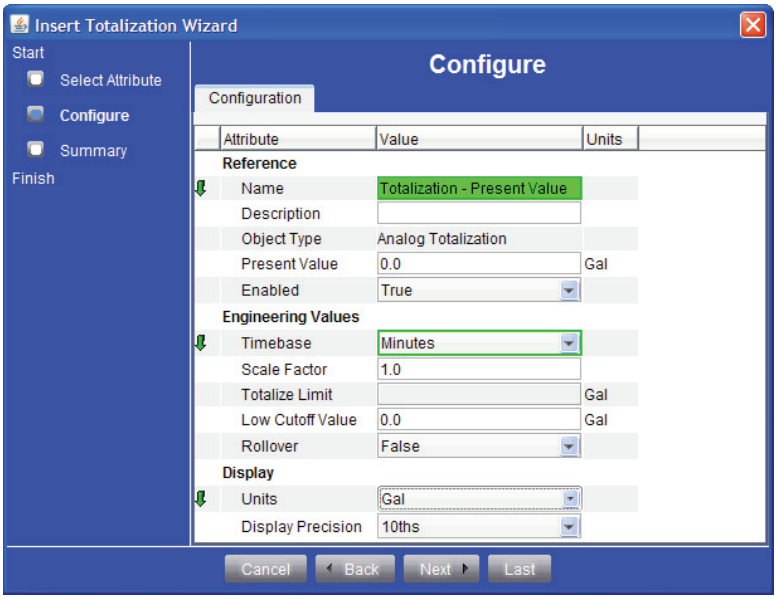

Figure 41: Totalization Configuration Page

- '**Time base**' - Establishes the time frame on which the calculated totalization value is based.
- '**Scale Factor**' - Indicates the value used to scale the totalized value to either a larger or smaller value than otherwise results
- '**Units**' – Select the appropriate unit for the extension value.
- Click '**Last**' once the configuration is complete

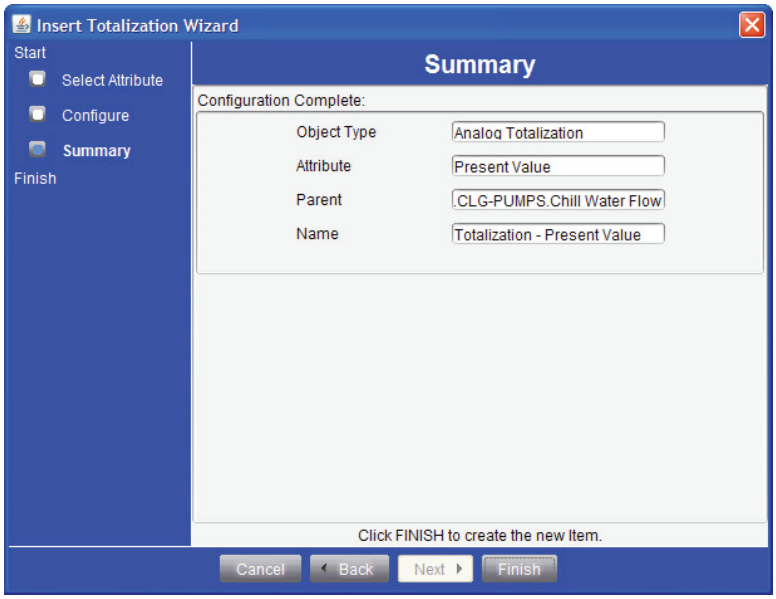

Figure 42: Finishing the Extension Creation

- To complete the totalization creation click on '**Finish**'

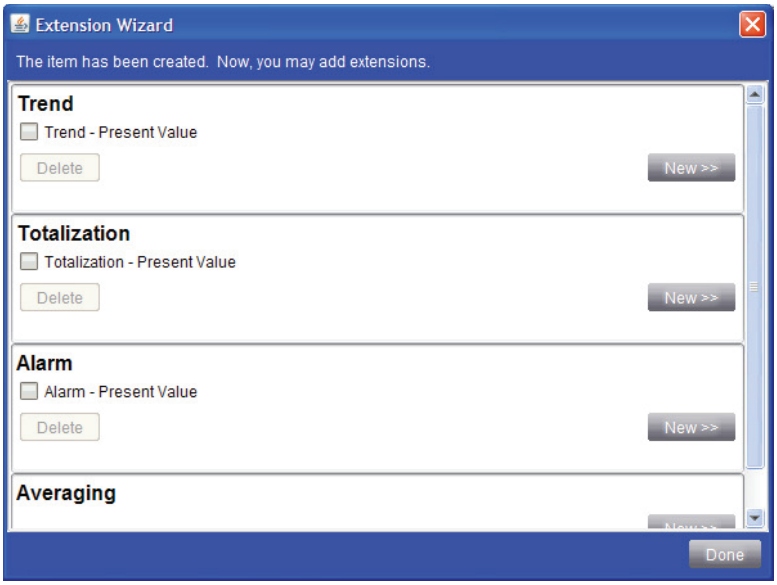

Figure 43: Extension Wizard box after the creation

- The '**Extension Wizard**' box re-appears and the newly added Totalization appears in the Totalization section. Click '**Done**' to close the wizard.

4.6. Adding a Totalization Extension to a Binary Object:

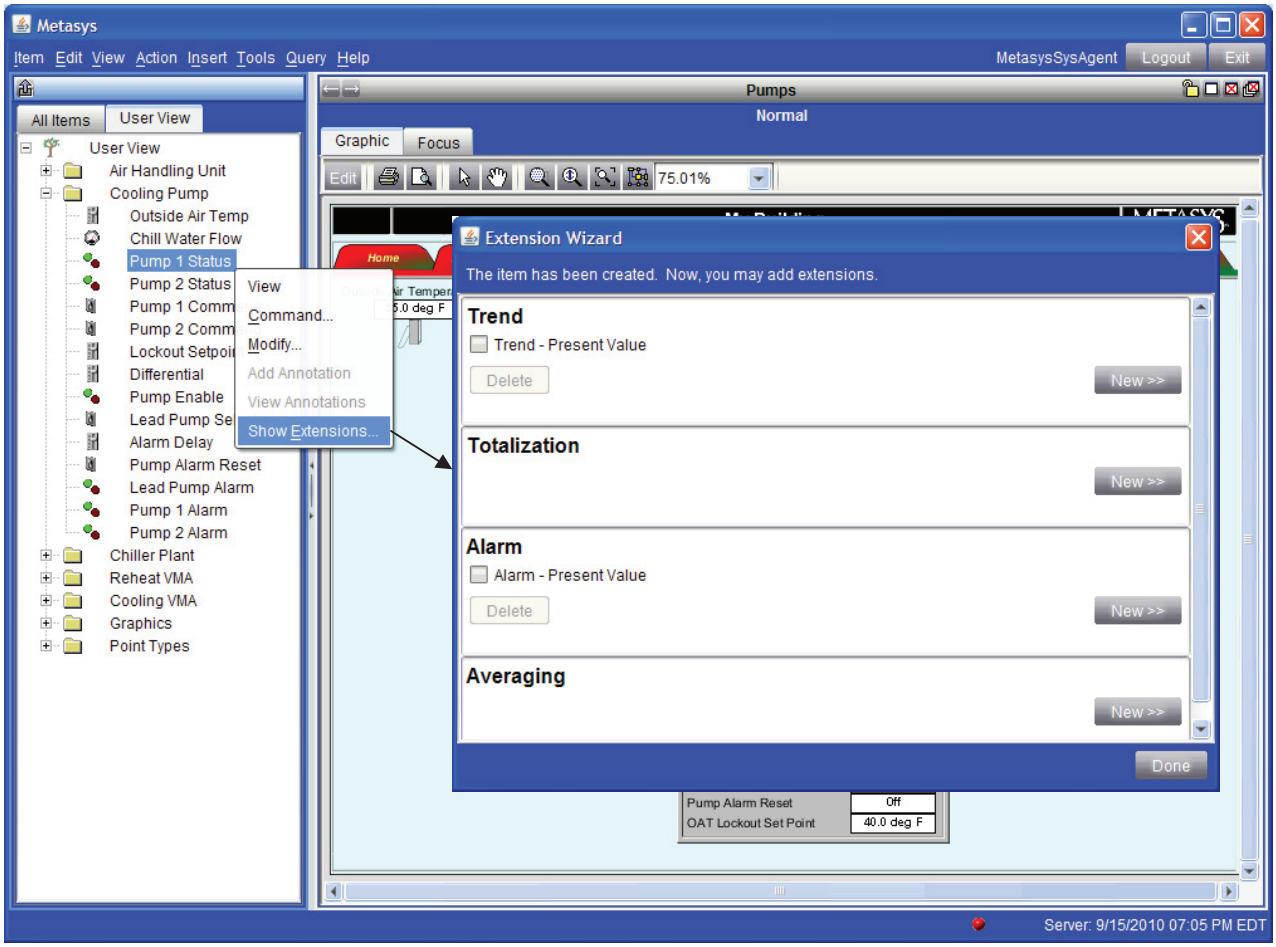

Figure 44: Viewing the Extension Wizard for a Binary Object.

- To add a Totalization to a Binary Object select the '**User View**' tab where the system resides. Navigate into the system folder and single left click on the point in question.
- When the '**Extension Wizard**' dialog box opens click on '**New**' in the '**Totalization**' section of the window.

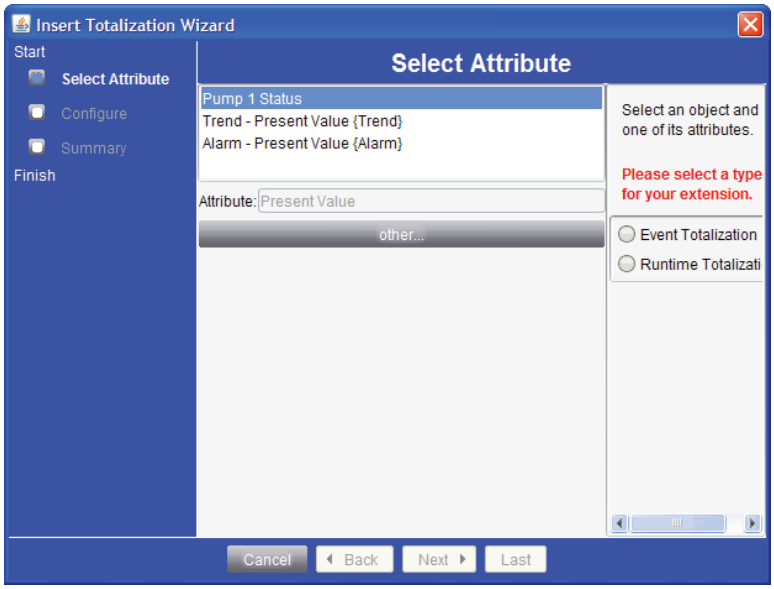

Figure 45: Select the attribute

- Select the '**Present Value**' from the list of attributes.
- Then select the type of '**Totalization'**:
  - **Event Totalization**
    - This tracks the number of binary events or pulses over time, meaning it counts the number of transitions that occur at an input reference. Unlike other types of totalization, event totalization increases the value each time the event occurs, instead of calculating the value once each minute. These three essential parameters determine the Event Totalization extension's mode of operation:
      - The Input Reference to be monitored.
      - The types of Transitions or events to be recorded.
      - The Value per Pulse (event) to be recorded.
  - **Runtime Totalization**
    - This tracks the time that elapses while a designated input, such as a binary or multistate value, matches a specified state. These two essential parameters determine the Runtime Totalization extension's mode of operation:
      - The Input Reference being monitored.
      - The Reference (state) that identifies active runtime.
- Click on '**Next**' once the selection has been made.

EVENT TOTALIZATION CONFIGURATION

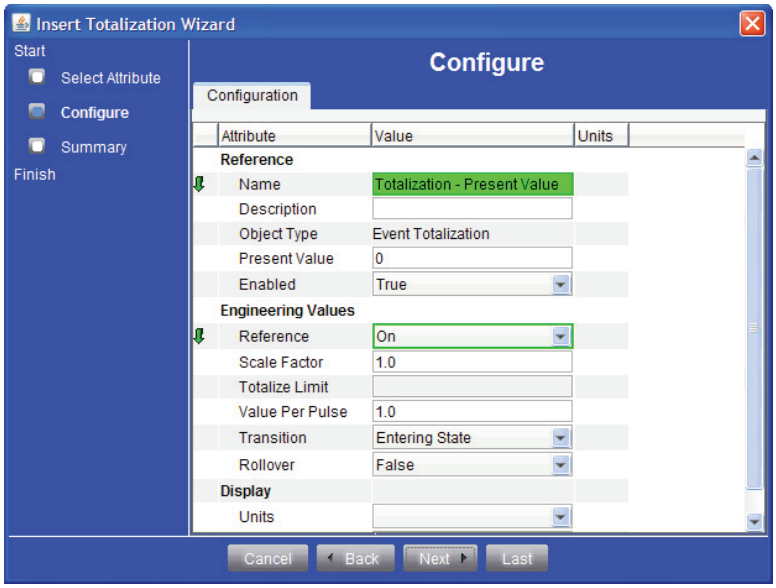

Figure 46: Setting up an Event Totalization

- '**Reference**' - choose the state that is to be totalized.
- '**Scale Factor**' - Indicates the value used to scale the totalized value to either a larger or smaller value than would otherwise result.
- '**Value per Pulse**' - Indicates the unit value of the Input Reference for pulse totalization. For the event totalization, the value is 1.
- Once the Totalization is configured click on '**Next**'

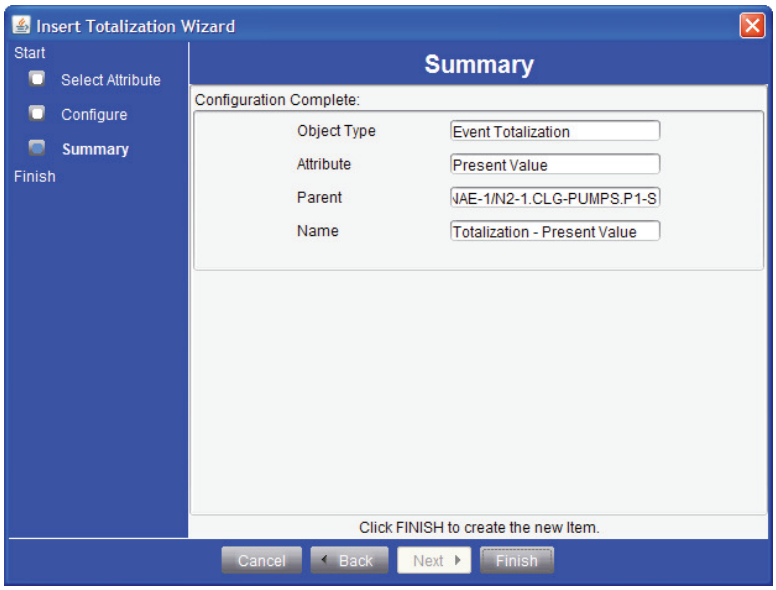

Figure 47: Finishing the Event Totalization Extension

- Click '**Finish**' to complete the extension set up.

RUNTIME TOTALIZATION CONFIGURATION

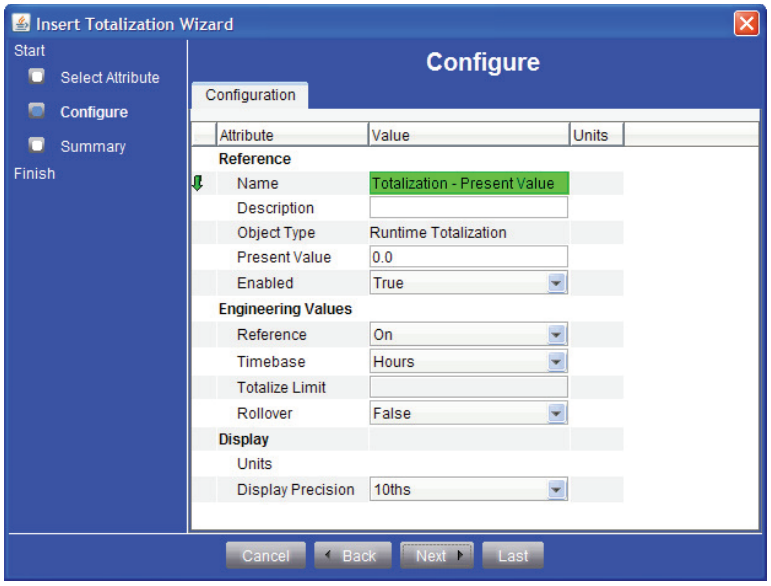

Figure 48: Setting up a Runtime Totalization

- '**Reference**' - choose the state that is to be totalized.
- '**Time base**' – Select the appropriate time base for the runtime of the binary object.
- Once the Totalization is configured click on '**Next**'.

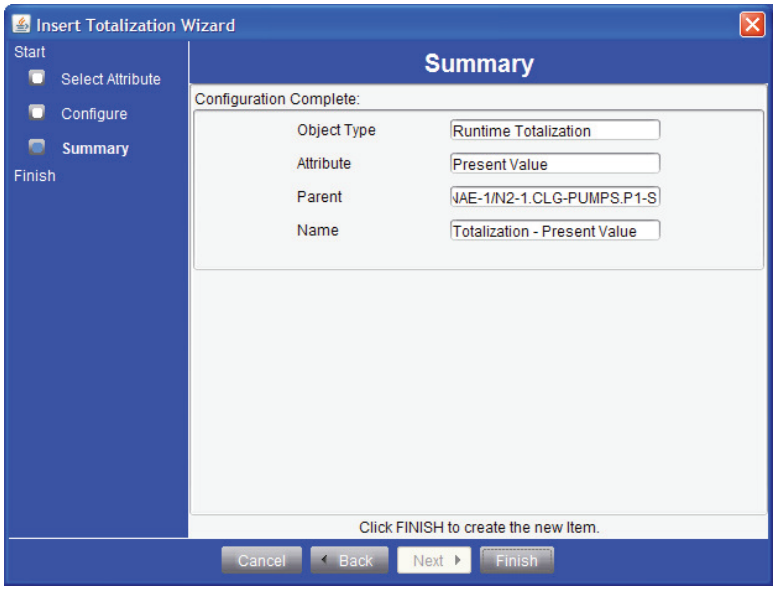

Figure 49: Finishing the Runtime Totalization Extension

- Click '**Finish**' to complete the extension set up.

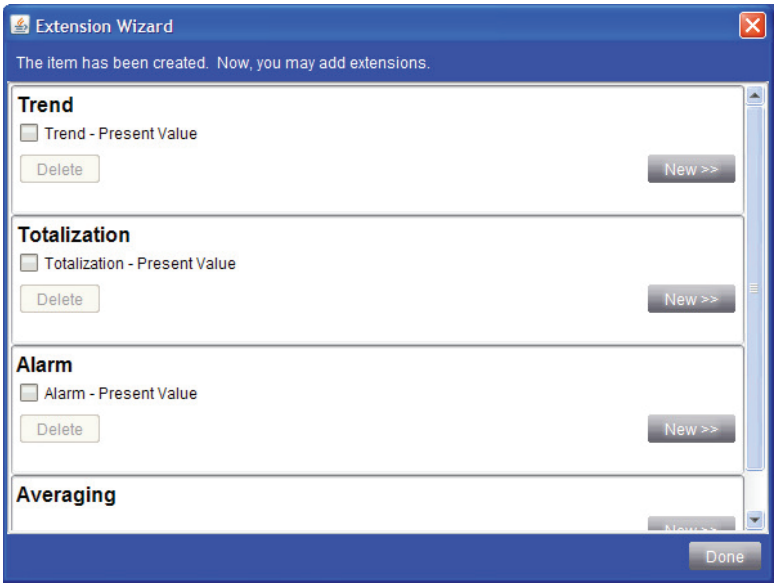

Figure 50: Extension Wizard after the extension was created.

- The '**Extension Wizard**' box re-appears and the newly added totalization appears in the Totalization section. Click '**Done**' to close the wizard.
- **NOTE:** Any extension may be deleted by checking the box beside the extension name and then clicking on '**Delete**'. If a Totalization is deleted all data will be lost.

5. Event Viewer

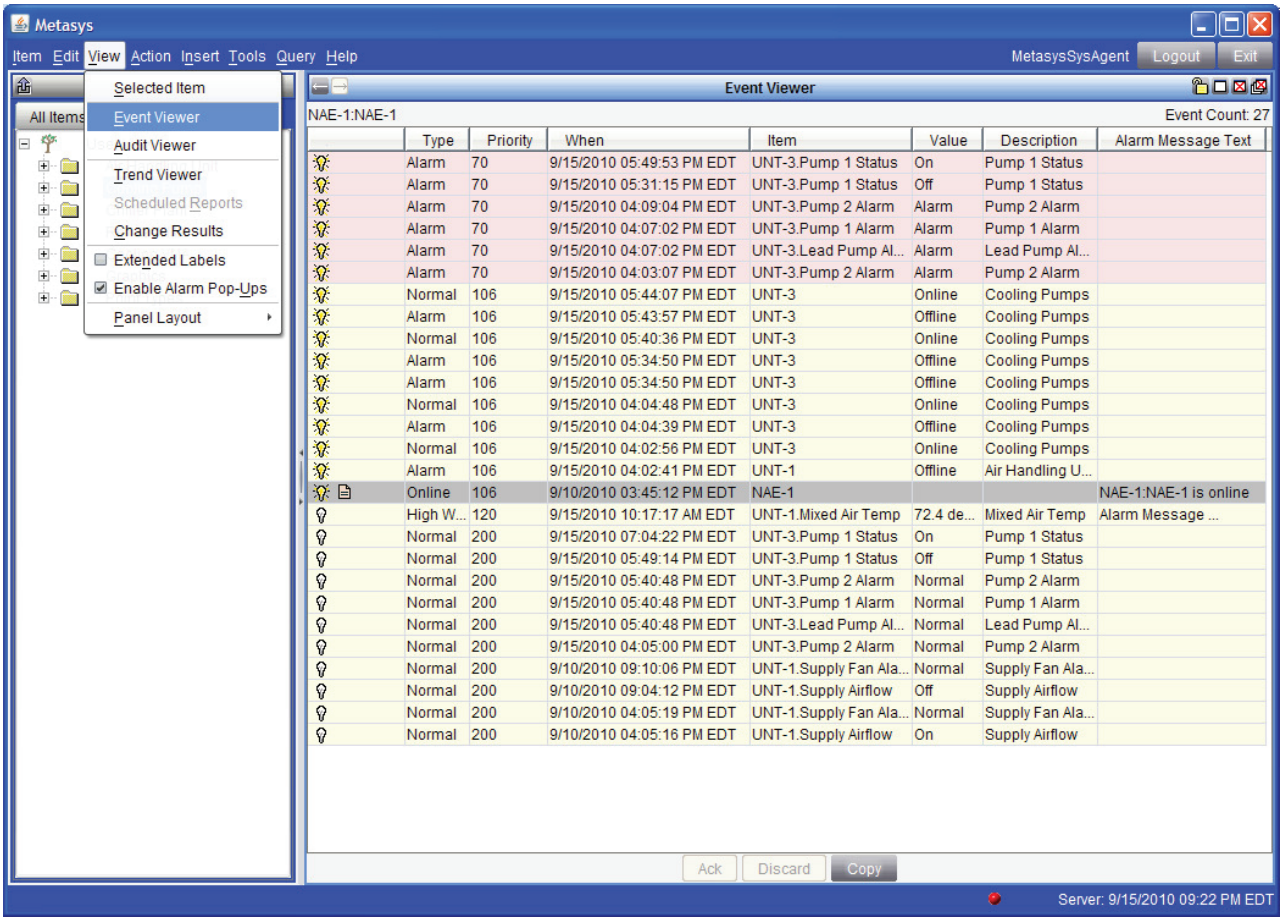

Figure 51: Viewing the Event Viewer for a single NAE site

- To open the '**Event Viewer**', click on '**View**' and then '**Event Viewer**'.
- If the Site has a single NAE then the '**Event Viewer**' will open in the right hand window.
- If the site has multiple NAEs then a dialog box will open similar to the one shown here.

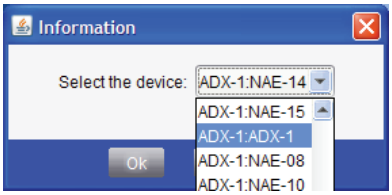

- Scroll down to the site director in the list, select it and click '**Ok**'.
- Similarly if the site has an ADS/ADX then scroll down to this object and click '**Ok**'.
- Once open the data displayed is all the alarms on the system.
  -  - This indicates acknowledged alarms.
    - These may be discarded or copied to a word document.
  -  - This indicates unacknowledged alarms.
    - These may be acknowledged, discarded or copied to a word document.

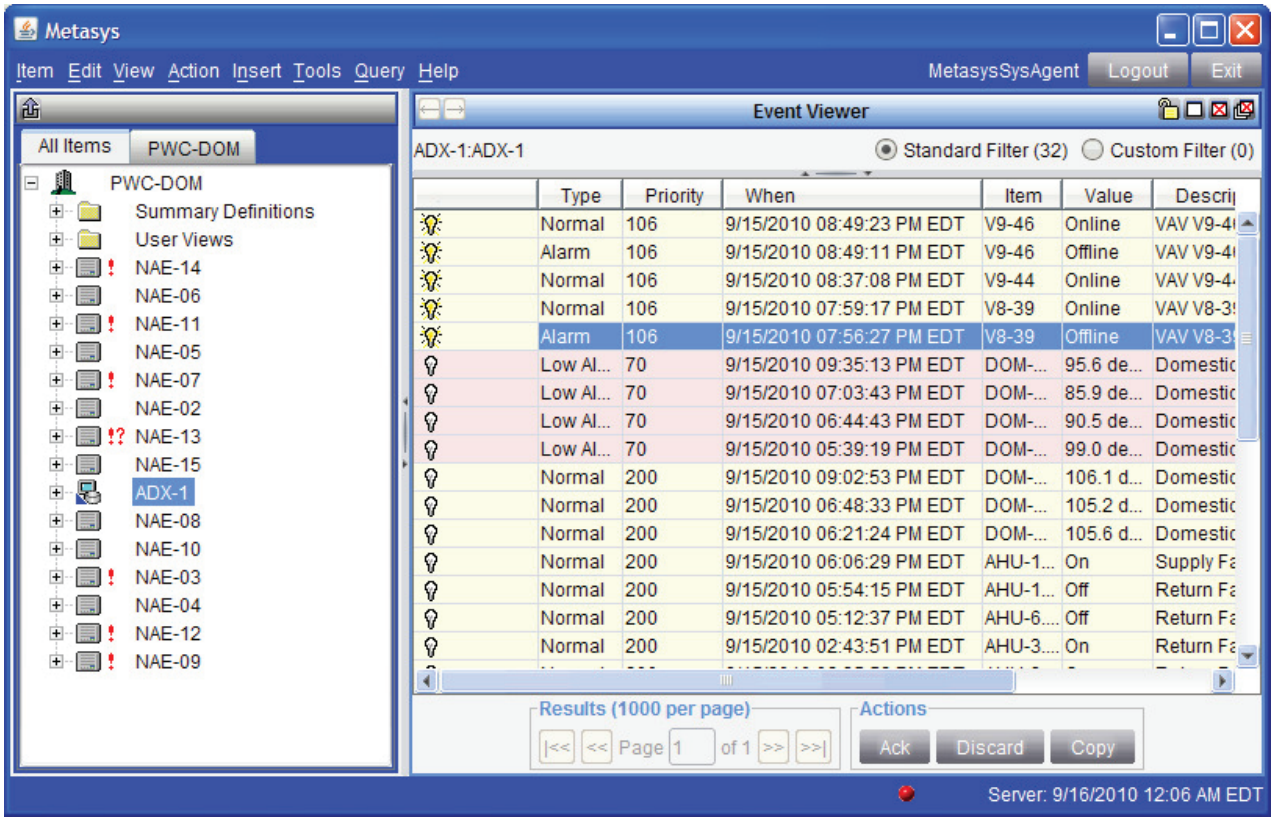

Figure 52: Event Viewer for a Site with an ADS/ADX as the Site Director

- The initial screen shown in the event viewer uses a Standard Filter that shows the most recent alarms (up to the first 1000).
  - If there are more than 1000 alarms then use the icons in the '**Results (1000 per page)**' to navigate through the events
- Filters:
  - **Standard filter** – shows all the events.
  - **Custom Filter** – to be discussed later – see page 43.
- To '**Acknowledge**' or '**Discard**' an Event you must highlight the event above and then select the appropriate action, either '**Acknowledge**' or '**Discard**'. Keep in mind that discarding an event will delete it from the event viewer. To select multiple alarms to discard; hold down the '**Ctrl**' Key and select multiple items or highlight one item and press '**Ctrl**'+'**A**' to select all items on the screen.

CUSTOM FILTERS IN THE EVENT VIEWER

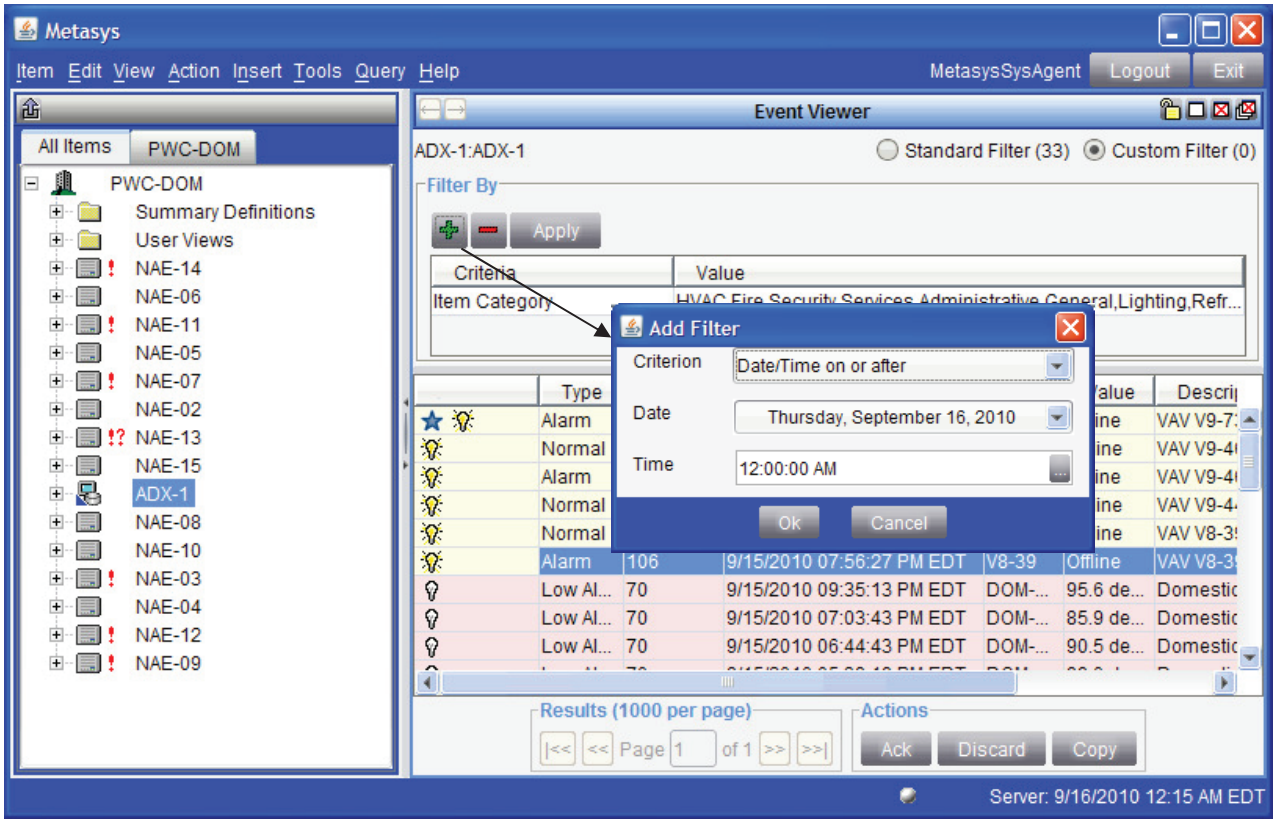

Figure 53: Using Custom Filters within the Event Viewer

- Use the icon to '**Add Filter**'
  - A number of different '**Criterions**' can be selected from; each selection of criterion will update the box, requesting relevant details.
  - Click '**Ok**' once the selections have been made.
- Use the icon to remove the selected filter. Click on '**Apply**' to update the data list.
- Once added the filter will show in the list, to update the event log click on '**Apply**'. The system will filter out the data that does not match the criterion.
- To '**Acknowledge**' or '**Discard**' an Event you must highlight the event above and then select the appropriate action, either '**Acknowledge**' or '**Discard**'. Keep in mind that discarding an event will delete it from the event viewer. To select multiple alarms to discard; hold down the '**Ctrl**' Key and select multiple items or highlight one item and press '**Ctrl**'+'**A**' to select all items on the screen.

6. Trend Viewer

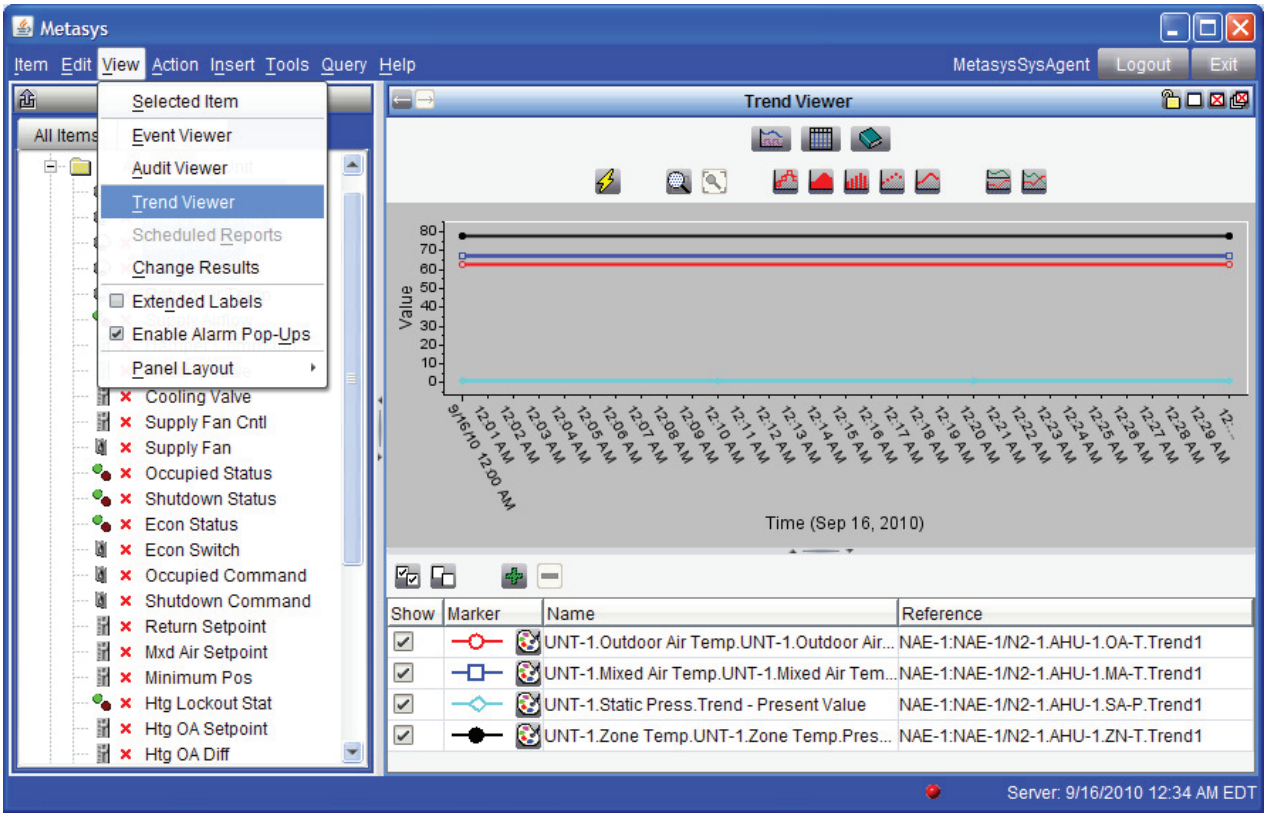

Figure 54: Opening the Trend Viewer.

- Select the '**User View**' tab where the system resides. Navigate into the system folder and single left click on the point in question, use '**Ctrl**' to select multiple points, preferably of the same type.
- Click on '**View**' and then select '**Trend Viewer**', the data will populate the right hand window.
- Display Options:
  -  - Displays the trend data graphically.
  -  - Displays the trend data in table form.
  -  - Display the definition view of the trend viewer.
- Other Icons:
  -  - Forces an update from the field points.
  -  - Zoom features of the trend viewer.
  -  - Graphically the data may be displayed as:
    - Points-Line Graph
    - Area Graph
    - Bar Chart
    - Points Graph
    - Line Graph

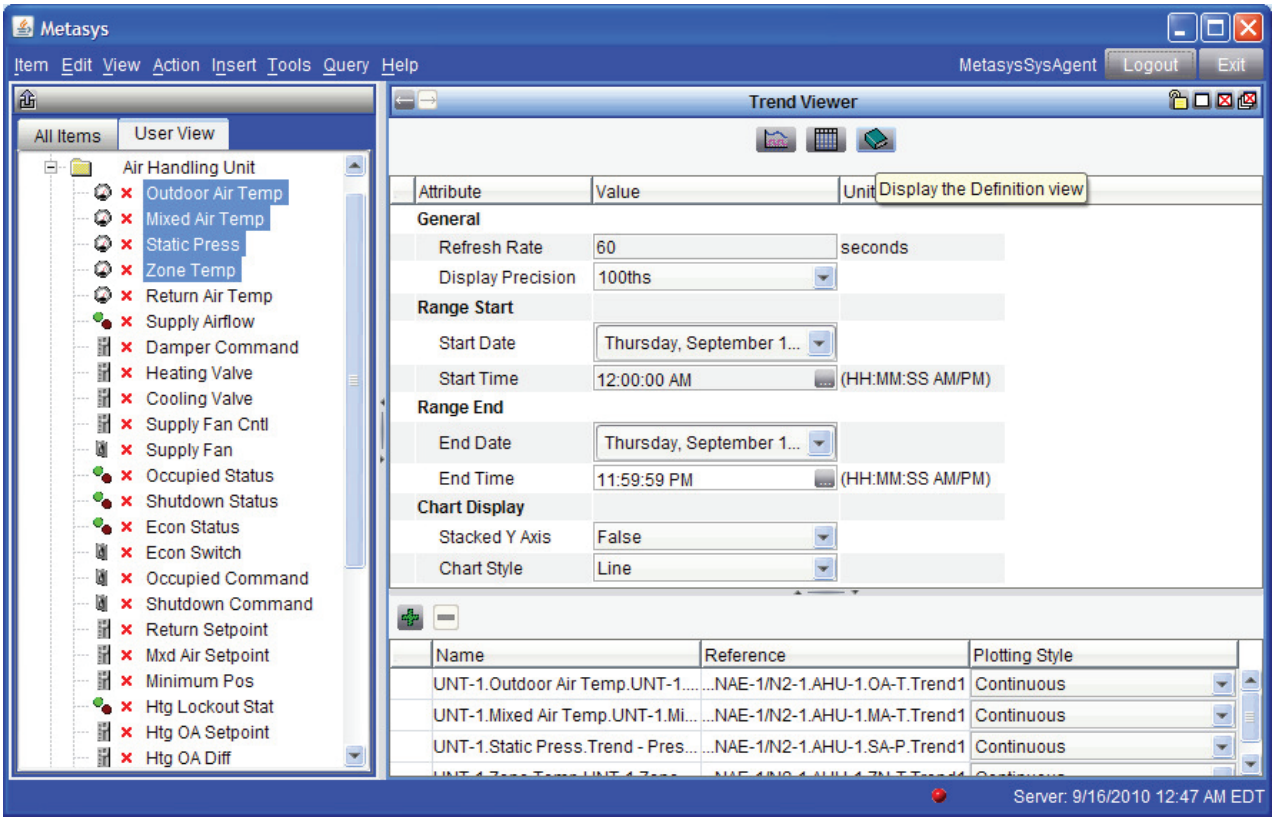

Figure 55: Displaying the Trend Viewer Definitions

- Change the '**Range Start**' and '**Range End**' dates needed to display the data required. The changes take effect immediately.
- Click on '  ' or '  ' to view the updated data.
- In the tabular view the data may be copied to a word pad document.

7. Schedule & Calendar Objects

7.1. Adding a Calendar Object

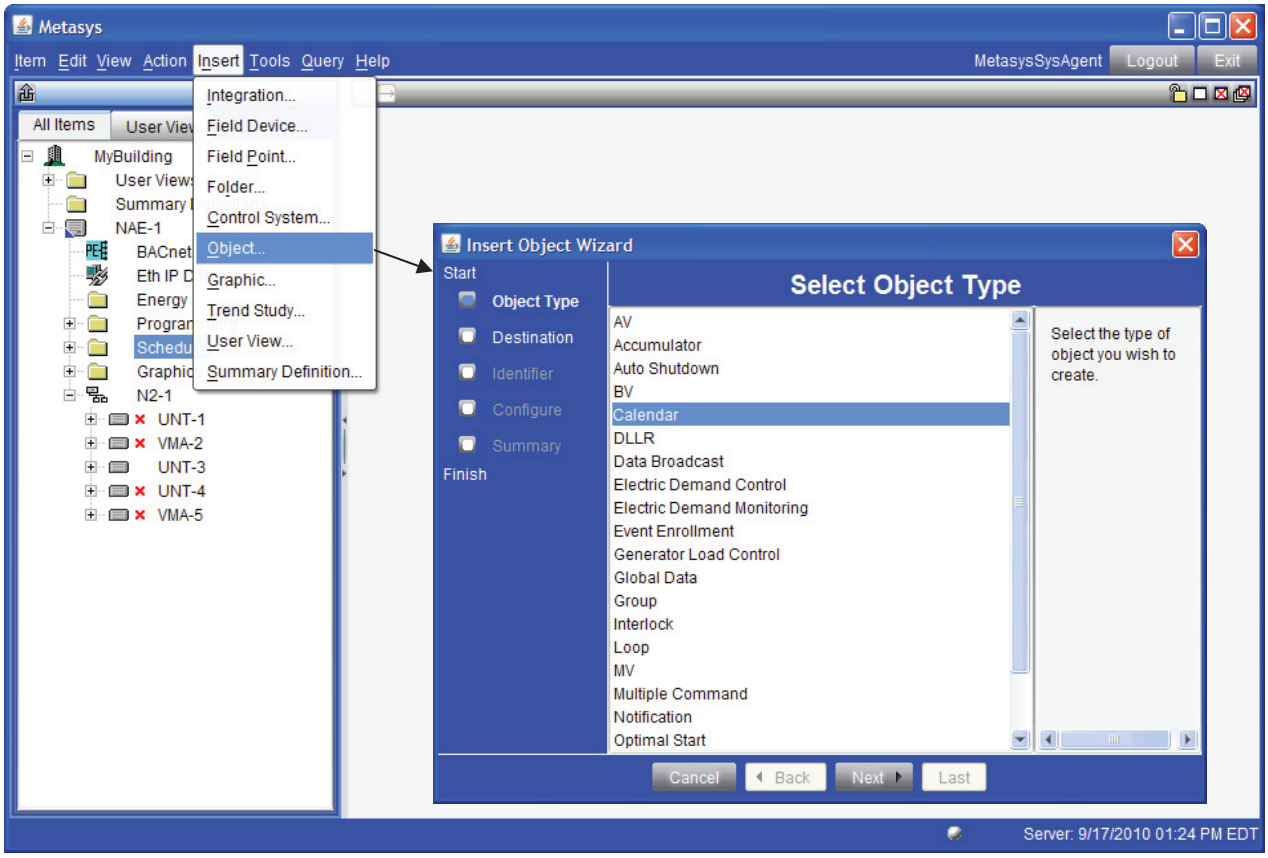

Figure 56: Inserting a Calendar Object – object selection.

- In the NAE to which the schedule is to be added expand the NAE to reveal the '**Schedule**' folder and then select it with a single left click.
- From the tool bar select '**Insert**' and then select '**Object**'.
- From the list of possible object click on '**Calendar**' and the '**Next**'.

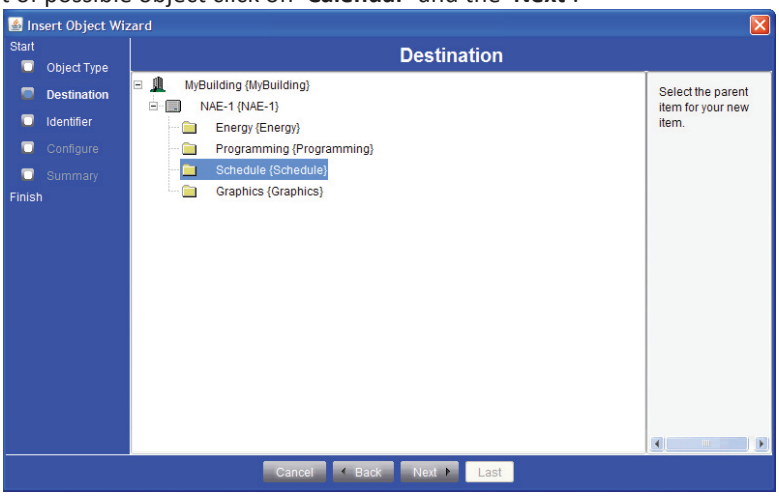

Figure 57: Destination of the Object

- Verify the destination of the '**Calendar**' Object and then click '**Next**'.

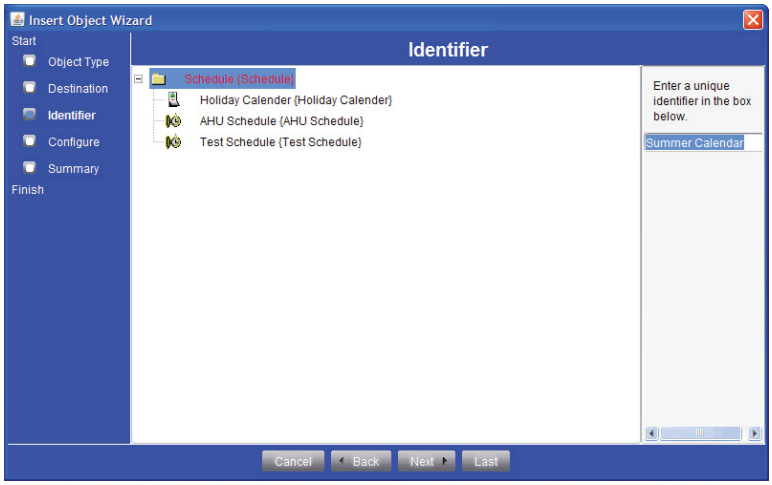

Figure 58: Naming the Calendar Object

- Enter a unique name for the calendar and then click on '**Next**'.

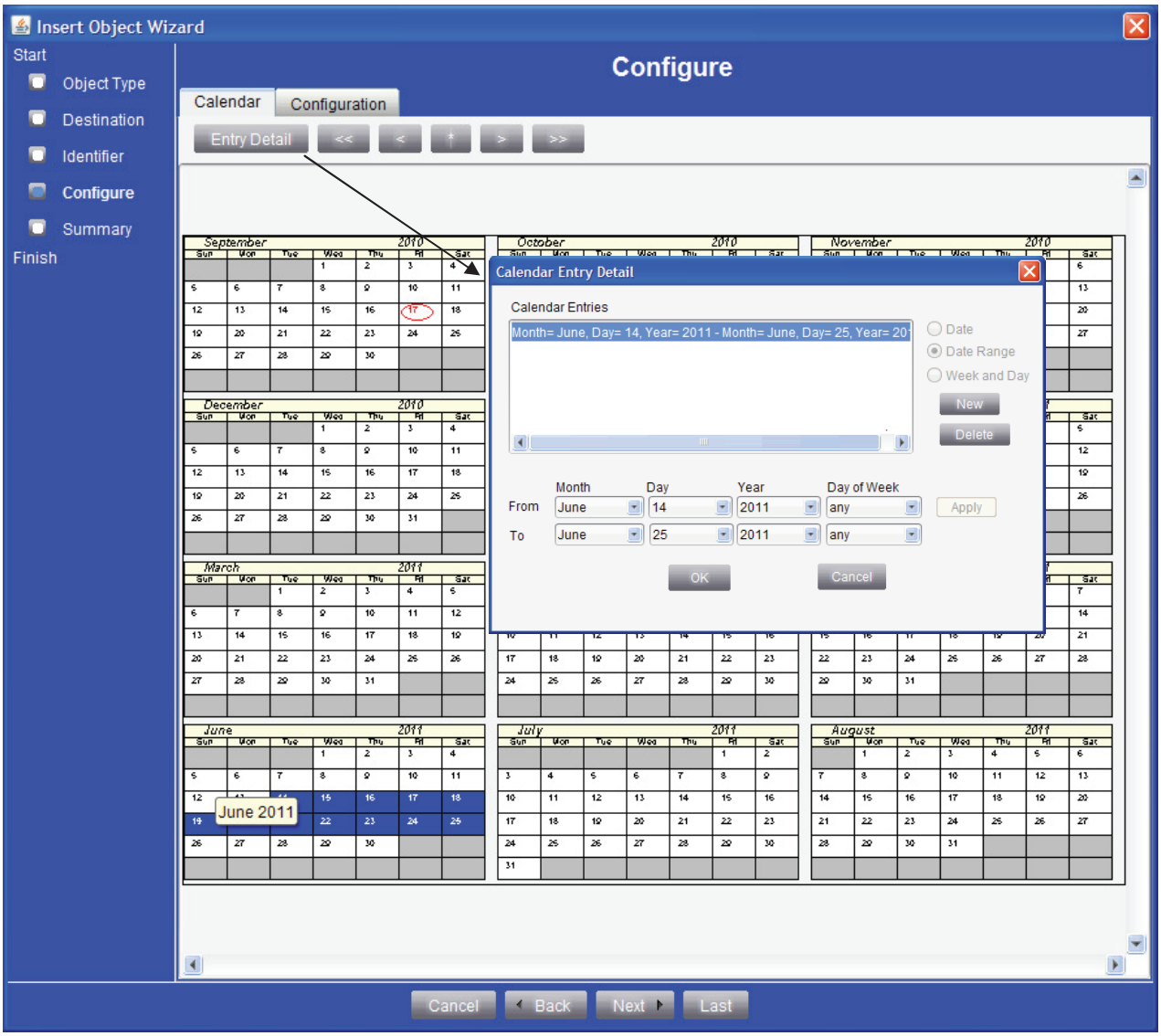

Figure 59: Configuration stage of the Calendar Object

- On this page click on the calendar dates as needed, the activated dates will turn dark blue as seen above. It is on these dates that an exception schedule referencing this calendar will be active.
- Calendar dates that appear in light blue occur every year on the same date.
- Another method of adding dates to this calendar is to use the '**Entry Detail**'. (Light blue days must be changed using this method.)
- Use these navigation buttons - << < > >> - to navigate back and forth. The calendar can be set up for many years in advance.
- Once the configuration is complete click on '**Next**'.

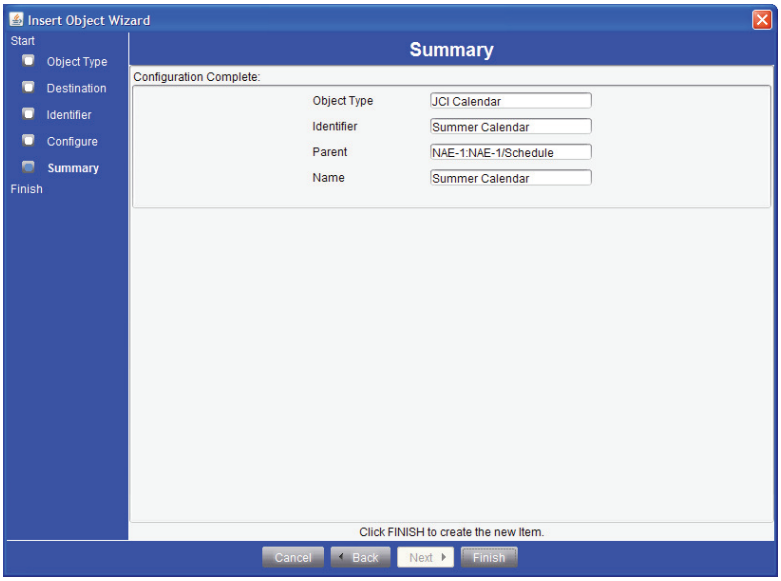

Figure 60: Completing the Calendar insertion process.

- Click on '**Finish**' and then '**Done**'.

7.2. Editing a Calendar Object

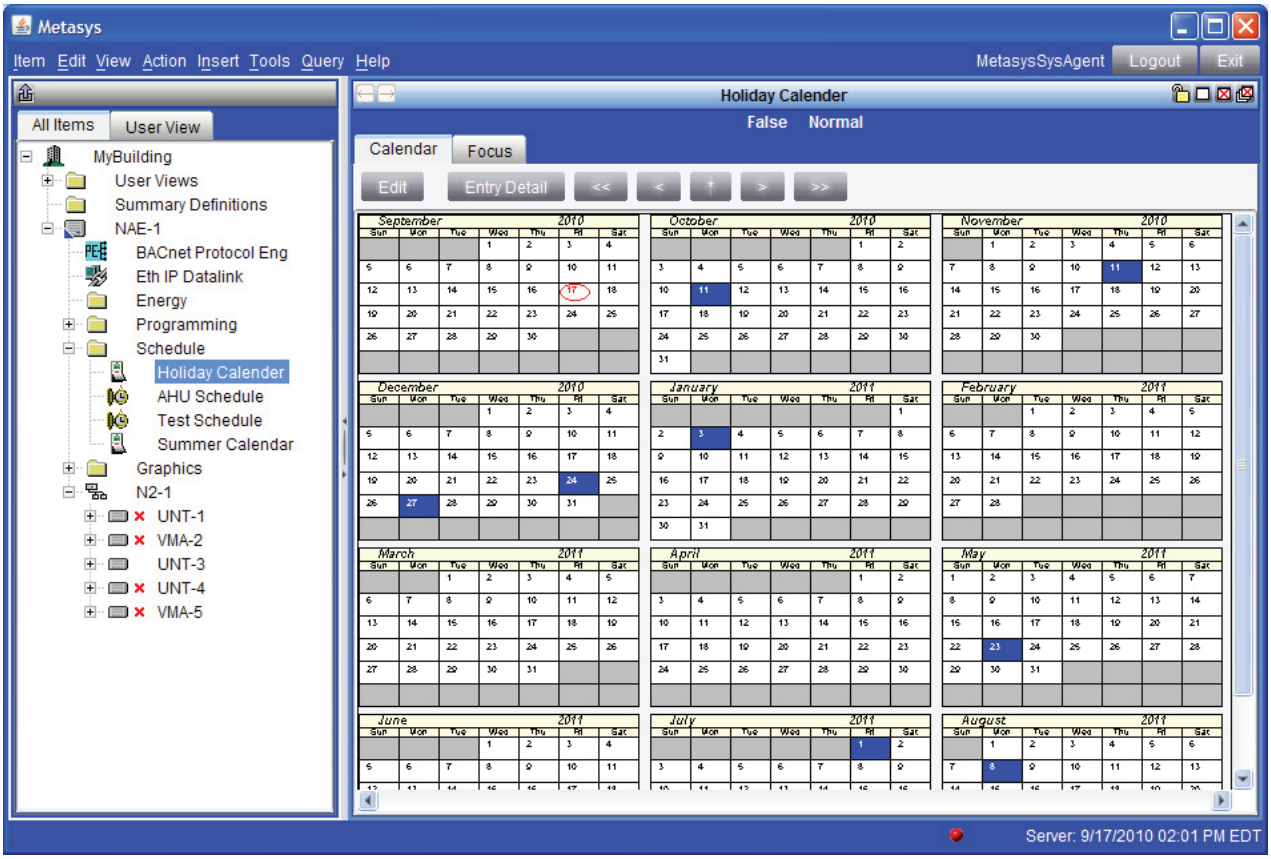

Figure 61: Editing an existing Calendar Object

- In the '**User View**' or the '**All Items**' tabs locate the calendar object to be edited and then double left click.
- The Calendar will populate the right hand window as seen above.
- To make changes to the calendar click on '**Edit**' and then single left mouse click on the dates to be added to the calendar object. These dates will appear in dark blue and are only for the current year. Adding days that are on the same date every year (Light blue) must be added/edited with the '**Entry Detail**' button.
- Use these navigation buttons -  - to navigate back and forth. The calendar can be set up for many years in advance.
- Once the changes are complete click on '**Save**'. – The '**Edit**' Button becomes a '**Save**' button.
- The modifications are complete

7.3. Adding a Schedule Object

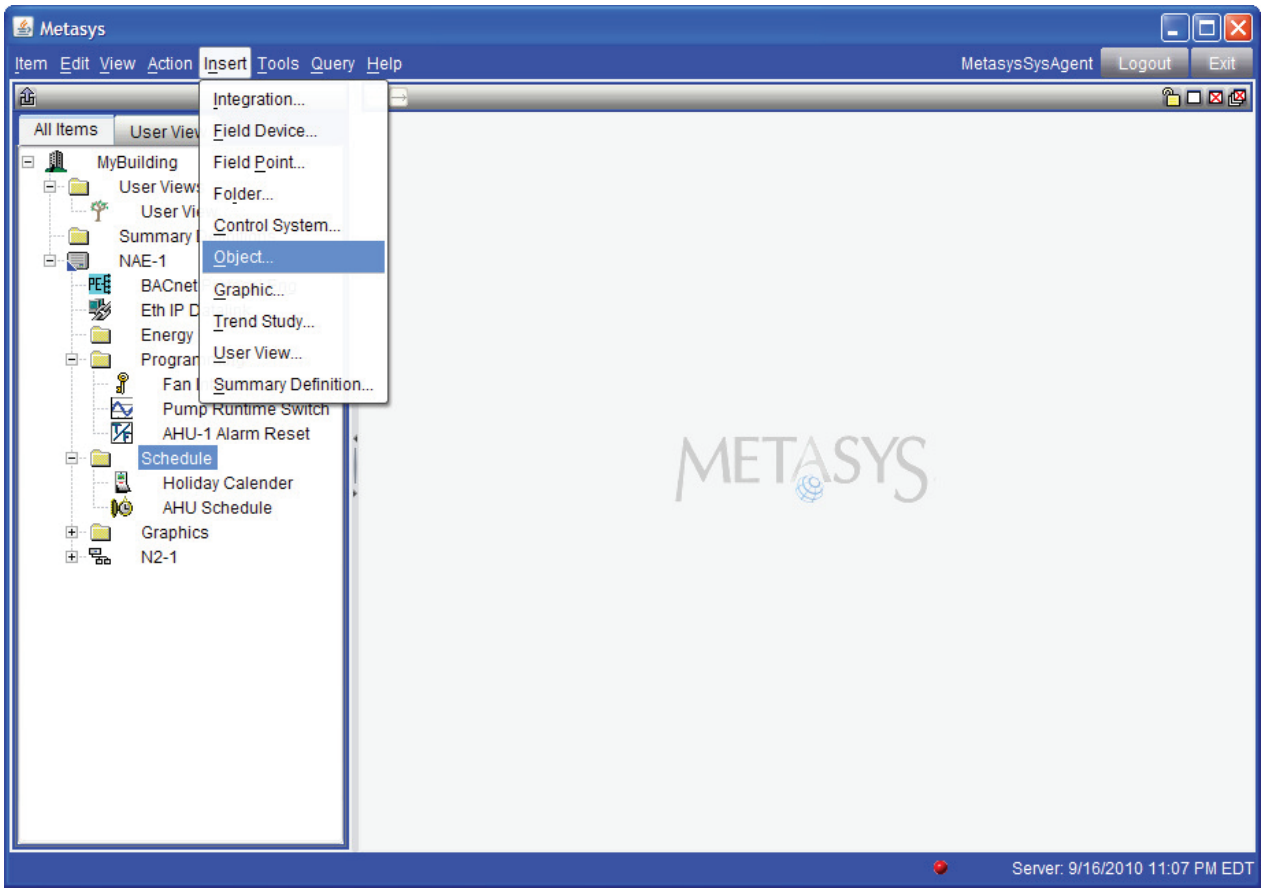

Figure 62: Creating a Schedule Object

- You must know which NAE the point you want to schedule is situated on before you begin. You must also have access to the All Items tree.
- In the NAE to which the schedule is to be added expand the NAE to reveal the '**Schedule**' folder and then select it with a single left click.
- From the tool bar select '**Insert**' and then select '**Object**'.

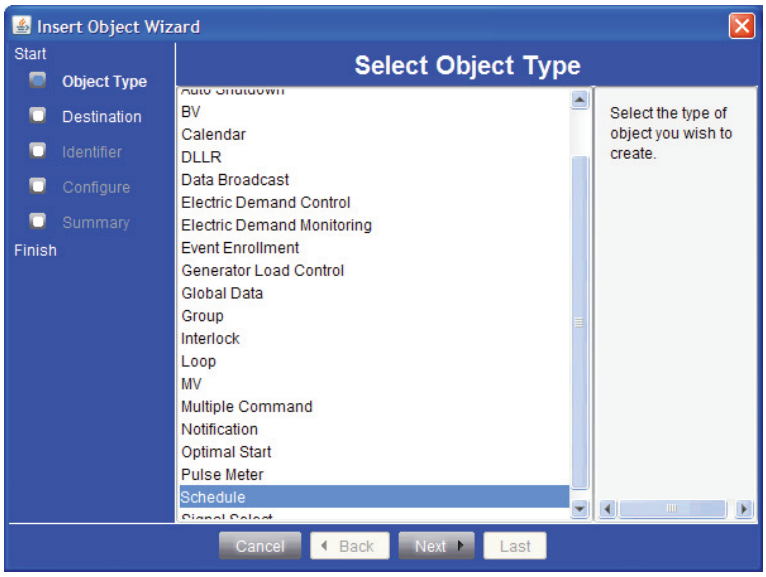

Figure 63: Select the object type

- From the list that appears select the '**Schedule**' object and then click '**Next**'.

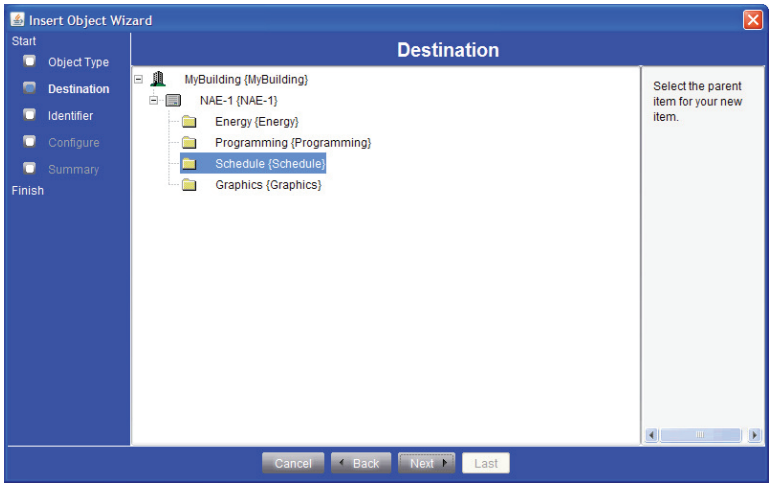

Figure 64: Schedule Objects Destination

- Select the folder in which the object will reside. The click '**Next**'

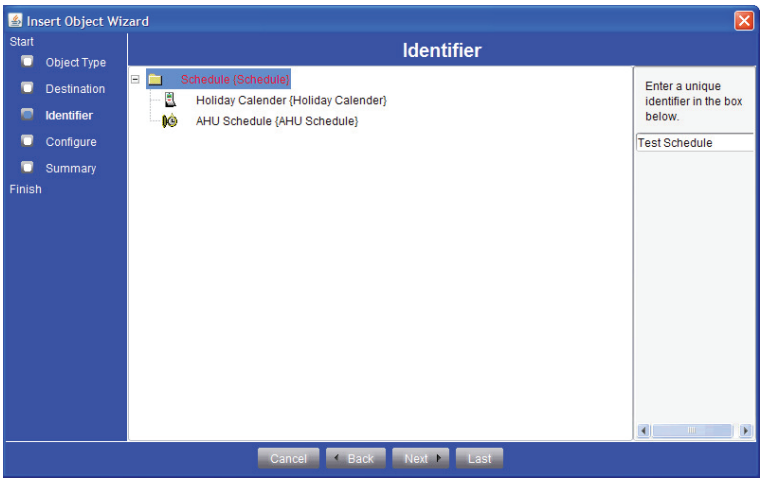

Figure 65: Naming new Schedule

- Give the schedule a unique name and the click '**Next**'

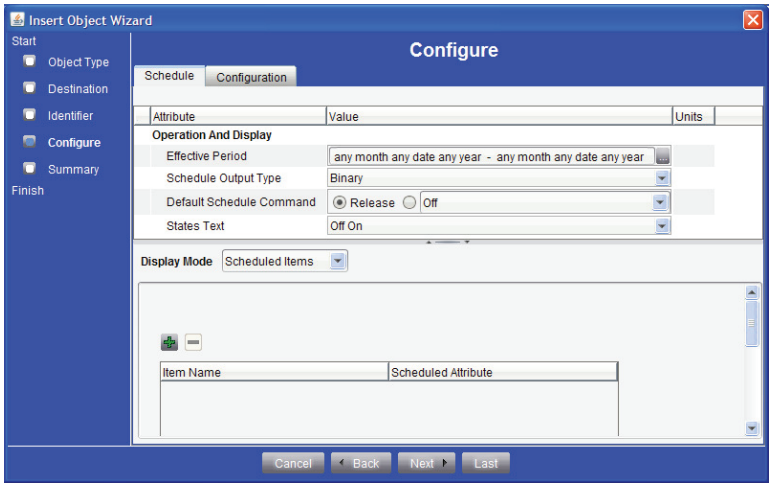

Figure 66: Select the scheduled Item(s)

- To indicate the point to be scheduled click on '  ' to open the '**Select Item**' dialog box
- Using either the '**All Items**' (if visible) or the user views select the point to be added. Multiple points can be added to the same schedule as long as they all have the same units (i.e.: all Off/On or all Start/Stop)
- Click on the '**Display Mode**' drop down box and select weekly schedule and edit it as needed.

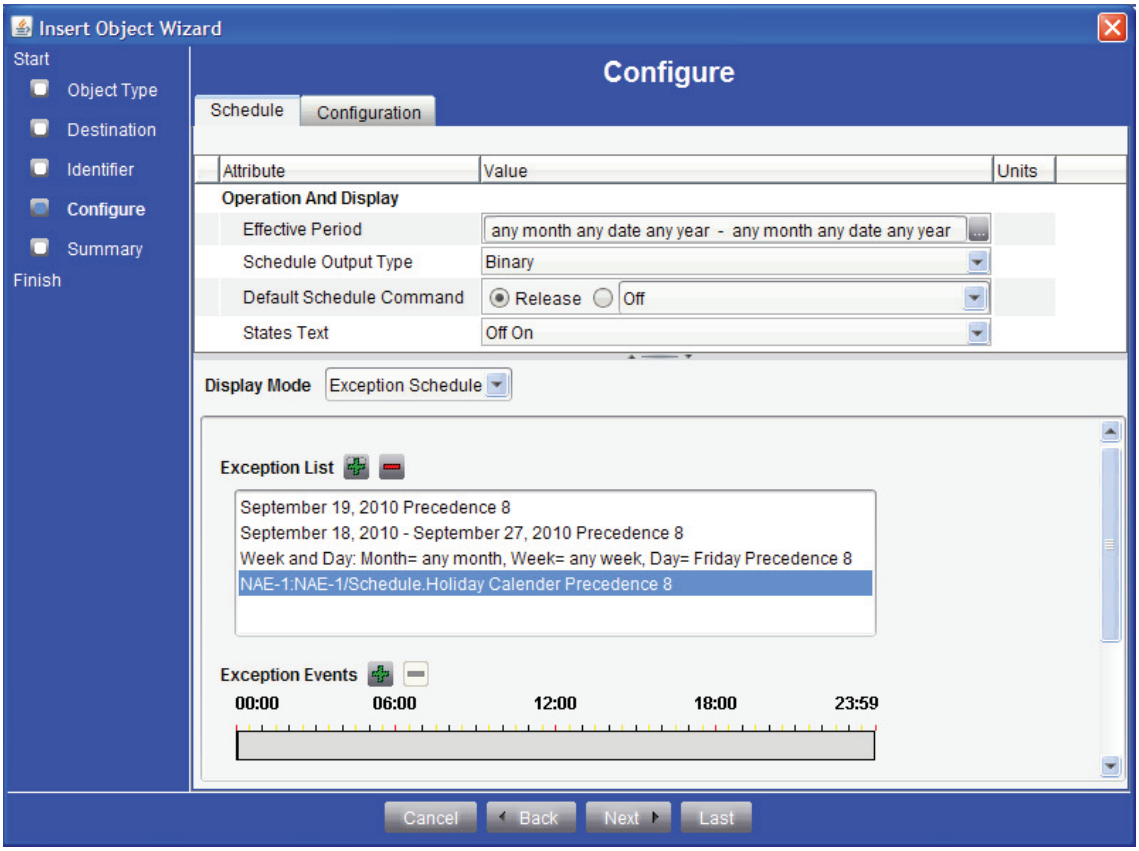

Figure 67: Adding the exception schedule.

- Click on '  ' to add to the list of exceptions, there are four options

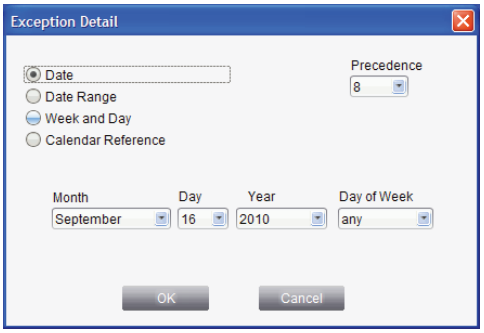

Figure 68: Single Date – Sept 16, 2010

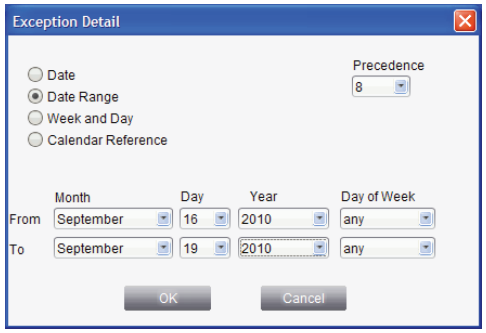

Figure 69: Date Range – Sept 16 to 19, 2010

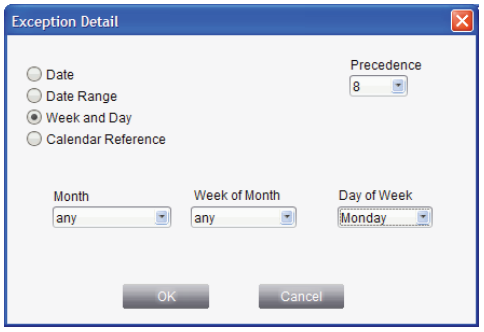

Figure 70: Week & Day - Every Monday

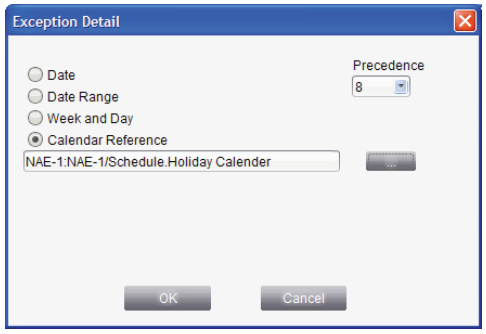

Figure 71: Calendar Reference – See Calendar

- For all four options, the event must also be set up before clicking '**Next**' then '**Finish**' and then '**Done**'

7.4. Editing a Schedule Object

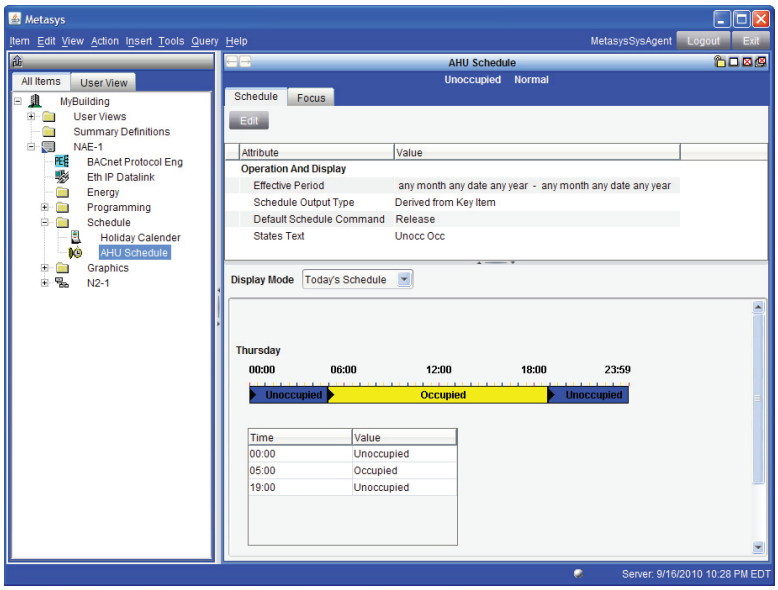

Figure 72: Default view when displaying a schedule item

- In the '**User View**' or the '**All Items**' tabs locate the Schedule object to be edited and then double left click.
- The Schedule will populate the right hand window as seen above.
- To make changes to the Schedule click on '**Edit**'
- Click on the drop down '**Display Mode**' and then choose '**Weekly Schedule**'
- Now click on '**Edit**' and the display reverts to the weekly schedule view.
- Make the necessary changes to the weekly schedule and then click on '**Save**' or select '**Exception Schedule**' from the drop down menu.

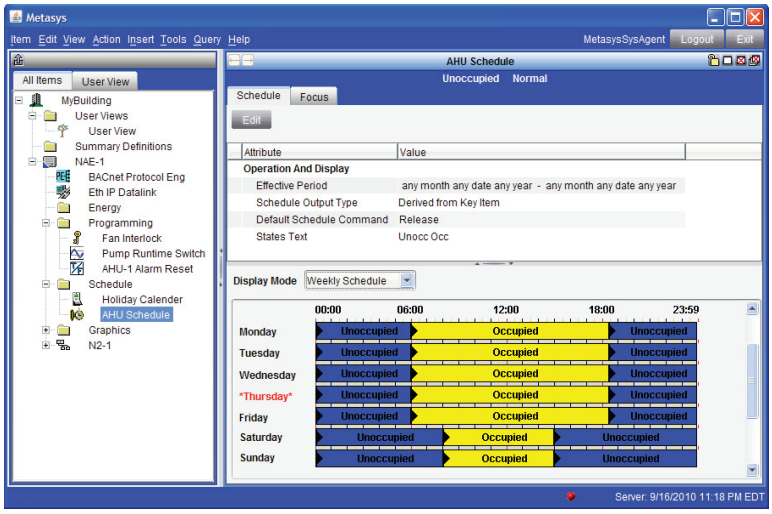

Figure 73: Weekly Schedule view of the Schedule object

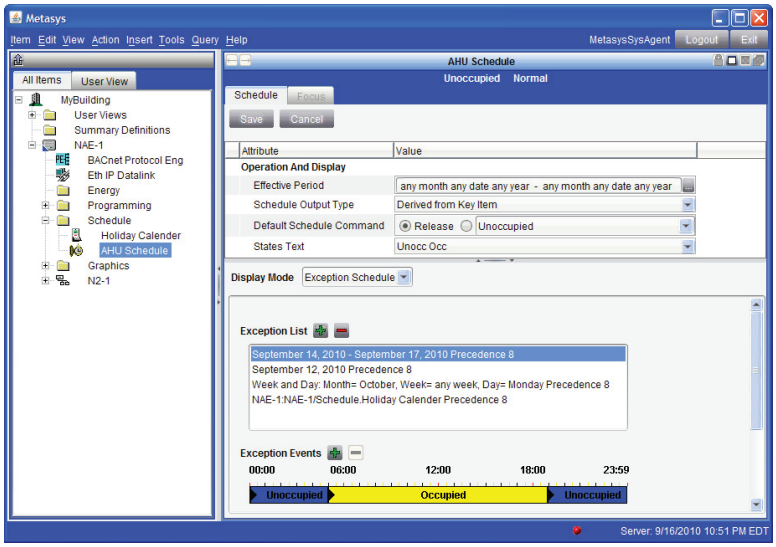

Figure 74: Viewing the Exception schedule set-up

- Click on '  ' to add to the list of exceptions, there are four options

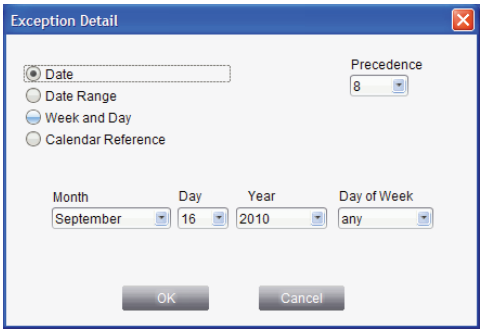

Figure 75: Single Date – Sept 16, 2010

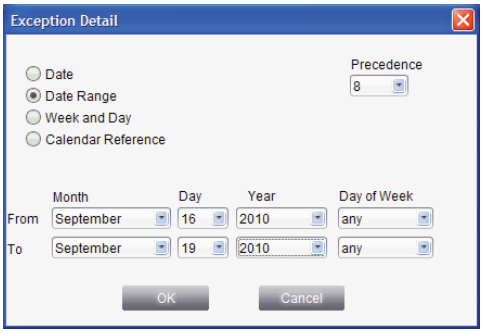

Figure 76: Date Range – Sept 16 to 19, 2010

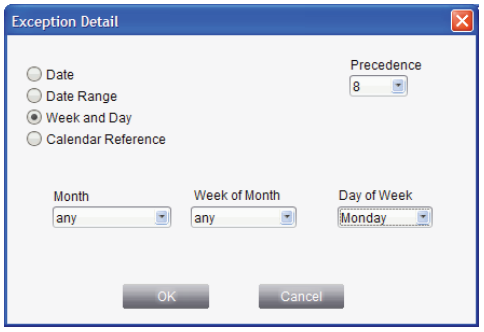

Figure 77: Week & Day - Every Monday

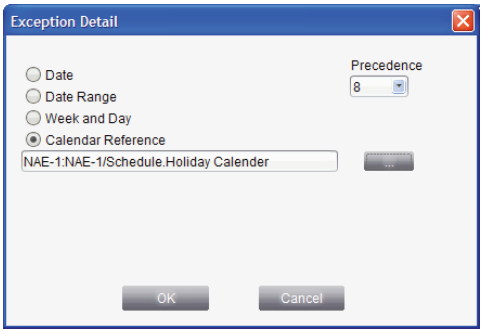

Figure 78: Calendar Reference – See Calendar

- For all four options, the event must also be set up before clicking '**Save**'

8. Tailored Summaries

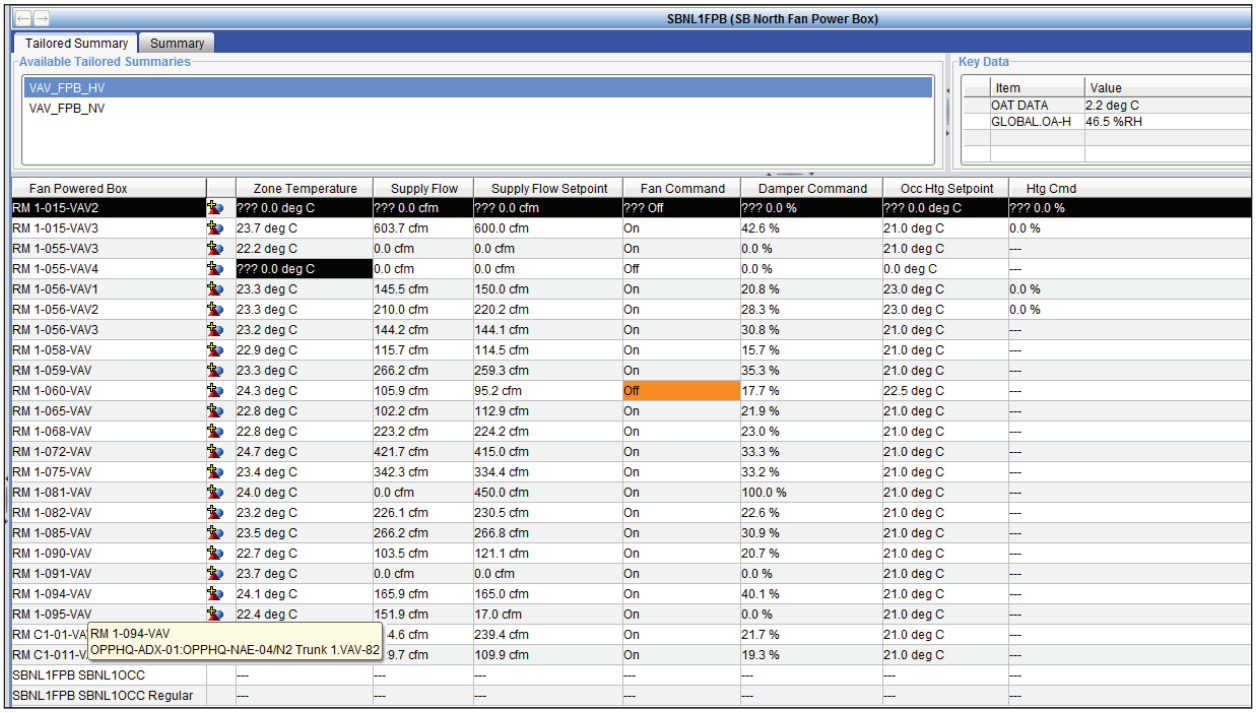

Figure 79: Sample view of a Tailored Summary

- Tailored Summaries are used to view the important points of devices. For example, we can display the points of multiple VAV boxes in an area.
- We can get a great amount of information into the tailored summary using the multiple columns and multiple tailored summaries with different points on the same devices.

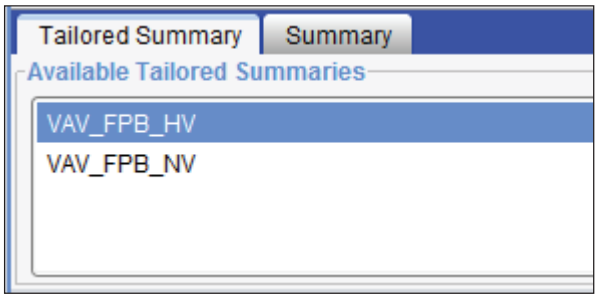

Figure 80: Viewing Multiple Tailored Summaries

- When multiple tailored summaries are available, they will be listed in the top left corner. Clicking on these other summaries will refresh the table with their updated columns.

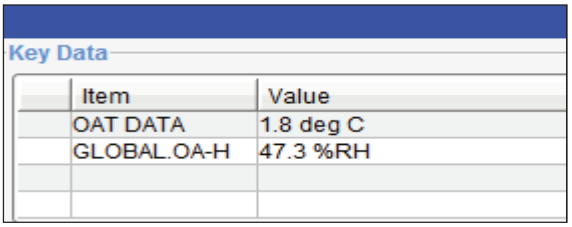

Figure 81: Key Data for Tailored Summaries

- In the top right corner of the summary lies the Key Data section. This is where pertinent information for the site can be added. In this case, the Outdoor Air Temperature and Humidity are always available for quick reference.

Fan Powered Box		Zone Temperature	Supply Flow	Supply Flow Setpoint	Fan Command	Damper Command	Occ Htg Setpoint	Htg Cmd
RM 1-015-VAV2		??? 0.0 deg C	??? 0.0 cfm	??? 0.0 cfm	??? Off	??? 0.0 %	??? 0.0 deg C	??? 0.0 %
RM 1-015-VAV3		23.7 deg C	594.3 cfm	600.0 cfm	On	42.6 %	21.0 deg C	0.0 %
RM 1-055-VAV3		22.1 deg C	0.0 cfm	0.0 cfm	On	0.0 %	21.0 deg C	---
RM 1-055-VAV4		??? 0.0 deg C	0.0 cfm	0.0 cfm	Off	0.0 %	0.0 deg C	---
RM 1-056-VAV1		23.3 deg C	141.9 cfm	150.0 cfm	On	20.8 %	23.0 deg C	0.0 %
RM 1-056-VAV2		23.3 deg C	207.0 cfm	214.6 cfm	On	28.3 %	23.0 deg C	0.0 %
RM 1-056-VAV3		23.2 deg C	143.1 cfm	150.9 cfm	On	30.8 %	21.0 deg C	---

Figure 82: Tailored Summaries Columns and Rows

- The columns display the live values and the rows are for each device. They can be sorted and moved around at will. Certain cells will light up in different colours depending on their condition. Red indicates an alarm, Yellow a warning, and Orange and operator override. Items in Black with question marks are offline or unreliable. When a column indicates – as a value, this means the device does not have that point.

Work with the Tailored Summary table as follows:

- To issue commands, select one or more items (that is, select the table cells), then right-click and select Command. To command all the items in a column, right-click the column header, and select Command. . For example, use this process to send an operator override command to multiple items. .
- To view an item, select an item and right-click and select View. The item appears in the display panel.
- To resize a column, place the cursor on the vertical line between the column headers so that the cursor has double-sided arrows (⟷). Click and drag the column to the desired width.
- To sort the column data alphanumerically, click a column header. Click the column header again to sort in the reverse order.
- To rearrange the order of the columns while viewing the Tailored Summary, select a column header and use drag-and-drop functionality to move it to the desired location.
- To keep a snapshot of the Tailored Summary's data for later comparison, select and copy the table data. Then paste it into a program such as Microsoft Excel. Use the keyboard shortcuts Ctrl A, Ctrl C, and Ctrl V.
- To view a graphic associated with field controller, double-click the graphic icon that appears in the second column of the table (by default). The graphic appears in the display panel.

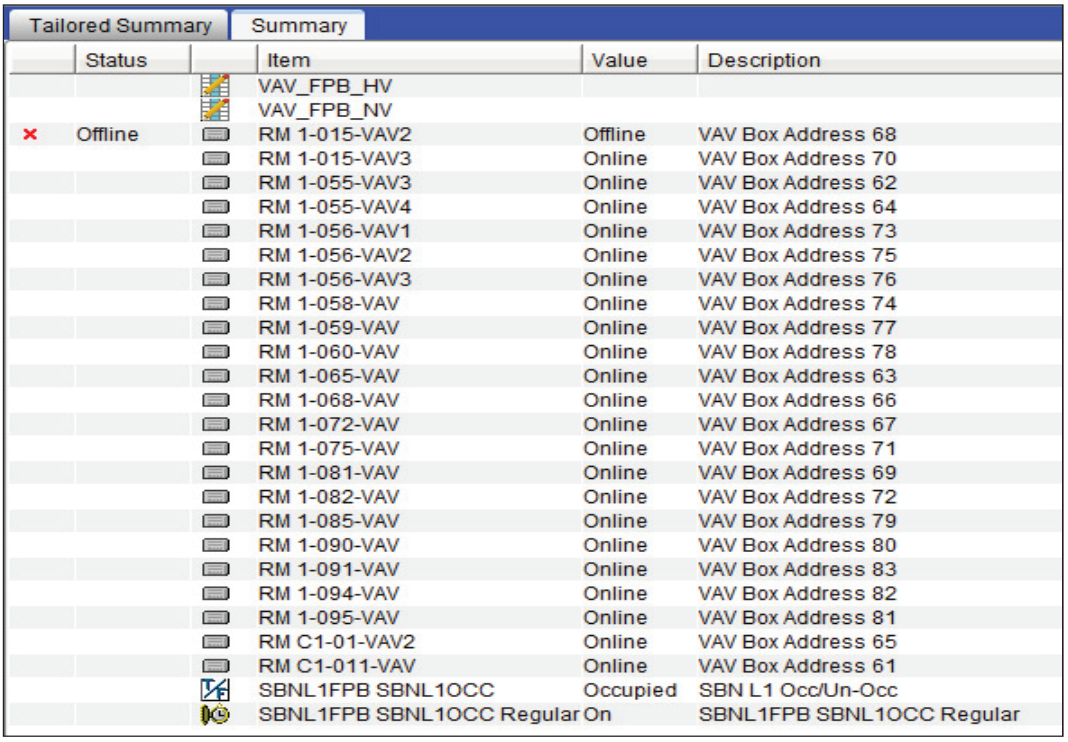

Tailored Summary | Summary

Status	Item	Value	Description
	VAV_FPB_HV		
	VAV_FPB_NV		
Offline	RM 1-015-VAV2	Offline	VAV Box Address 68
	RM 1-015-VAV3	Online	VAV Box Address 70
	RM 1-055-VAV3	Online	VAV Box Address 62
	RM 1-055-VAV4	Online	VAV Box Address 64
	RM 1-056-VAV1	Online	VAV Box Address 73
	RM 1-056-VAV2	Online	VAV Box Address 75
	RM 1-056-VAV3	Online	VAV Box Address 76
	RM 1-058-VAV	Online	VAV Box Address 74
	RM 1-059-VAV	Online	VAV Box Address 77
	RM 1-060-VAV	Online	VAV Box Address 78
	RM 1-065-VAV	Online	VAV Box Address 63
	RM 1-068-VAV	Online	VAV Box Address 66
	RM 1-072-VAV	Online	VAV Box Address 67
	RM 1-075-VAV	Online	VAV Box Address 71
	RM 1-081-VAV	Online	VAV Box Address 69
	RM 1-082-VAV	Online	VAV Box Address 72
	RM 1-085-VAV	Online	VAV Box Address 79
	RM 1-090-VAV	Online	VAV Box Address 80
	RM 1-091-VAV	Online	VAV Box Address 83
	RM 1-094-VAV	Online	VAV Box Address 82
	RM 1-095-VAV	Online	VAV Box Address 81
	RM C1-01-VAV2	Online	VAV Box Address 65
	RM C1-011-VAV	Online	VAV Box Address 61
	SBNL1FPB SBNL1OCC	Occupied	SBN L1 Occ/Un-Occ
	SBNL1FPB SBNL1OCC Regular	On	SBNL1FPB SBNL1OCC Regular

Figure 83: Summary Columns and Rows

- When the Summary Tab is pressed at the top the actual contents of the folder are shown. This includes the Summary definition templates used to make the Tailored Summary tab. This will also give you access to any other points in the folder like schedules.

SECTION 4
BUILDING SYSTEM DESCRIPTIONS

Iqualuit Waste Water Treatment Plant Upgrades

8N0Y-0079

DRAWING INDEX	
Drawing	Description
001.001	Network Riser Diagram
002.001	Heating Water System Flow Diagram
002.002	Heating Water System Sequence of Operation
002.003	Heating Water System Hardware Schedule
002.004	Heating Water System Wiring Details
003.001	Water Supply & Recirculation System Flow Diagram
003.002	Water Supply & Recirculation System Hardware Schedule & Wiring Details
004.001	Domestic Hot Water System Flow Diagram
004.002	Domestic Hot Water System Hardware Schedule & Wiring Details
005.001	Fuel Tank System Flow Diagram
005.002	Fuel Tank System Hardware Schedule & Wiring Details
006.001	AHU-2 Flow Diagram
006.002	AHU-2 Sequence of Operation
006.003	AHU-2 Wiring Diagram
006.004	AHU-2 Hardware Schedule
006.005	AHU-2 Wiring Details
006.006	AHU-3 Flow Diagram
006.007	AHU-3 Sequence of Operation
006.008	AHU-3 Hardware Schedule
006.009	AHU-3 Wiring Details
007.001	Mechanical Room Cooling CF-1 Flow Diagram
007.002	Mechanical Room Cooling CF-1 Hardware Schedule
007.003	Mechanical Room Cooling CF-1 Wiring Details
007.004	Electrical Room Cooling CF-2 Flow Diagram
007.005	Electrical Room Cooling CF-2 Hardware Schedule & Wiring Details

DRAWING INDEX	
Drawing	Description
008.001	Generator Room Ventilation Flow Diagram
008.002	Generator Room Ventilation Hardware Schedule & Wiring Details
009.001	HRV-1 Flow Diagram
009.002	HRV-1 Hardware Schedule & Wiring Details
010.001	UH Flow Diagram
010.002	UH W/Process Blower Flow Diagram
010.003	UH With Process Blowers Hardware Schedule & Wiring Details
010.004	Perimeter Heating Flow Diagram
011.001	Sump Pump Flow Diagram
011.002	Building Low Temperature Alarm Flow Diagram
011.003	Miscellaneous System Flow Diagram
011.004	Miscellaneous System Hardware Schedule & Wiring Details
012.001	Panel EN-1 Layout
012.002	Panel EN-2 Layout
012.003	Panel EN-3 Layout
012.004	Panel EN-4 Layout
012.005	Panel EN-5 Layout
012.006	Panel EN-6 Layout
012.007	Panel EN-7 Layout
VS-1	Valve Schedule
PD-1	Product Catalog

Johnson Controls

Creating a better climate for business.

- ☐ Environmental Control System
- ■ Facility Management System
- ☐ Air and Water System Balancing
- ☐ Fire Management System
- ☐ Security System
- ☐ Lighting Services
- ☐ Instrumentation System Installation
- ☐ Building Operations Management
- ☐ Energy Conservation Control
- ☐ Training Programs
- ☐ Performance Contracting
- ☐ Planned Service Agreements

Air Conditioning
Heating
Diagnostic Services
Coil Cleaning
Refrigeration
Automatic Temperature Controls
Facility Management Systems
Fire Management
Security Management
Building Operations and Management
Water Treatment
Electrical Equipment
Emergency Generator / Lighting Equipment
Industrial Controls / Recording / Indication Equipment

PROJECT TITLE

Iqualuit Waste Water Treatment Plant Upgrades

ARCHITECT

ENGINEER
Stantec Ltd.
1088C Noble House,
Iqaluit, Nunavut X0A 0H0
Phone: 867-979-0555
Fax: 867-979-9711

MECHANICAL CONTRACTOR
Mecanique Nordique
9257-6131 Quebec Inc.
Levis, QC G7A 2P4
Phone: 418-496-1109

ELECTRICAL CONTRACTOR

Rev. Number	Rev. Initials	Date	Rev. By	Rev. Description
2		10/11/2018	SH	Updated as per CCN001
1		07/23/2018	SH	Submittal

Johnson Controls

Branch Information
Johnson Controls Ltd.
1375 Rue Frank-Carrel
Ville de Quebec, QC G1N 2E7
Phone: 418-681-7958

SALES ENGINEER	PROJECT MANAGER	DESIGNER	DATE	CONTRACT NUMBER
G. D. Montigny	Philippe Cernosek	CoEE	10/11/2018	8N0Y-0079

H:\8N0Y0079\Drawings\TITLE PAGE DRAWING.vsd

LEGEND

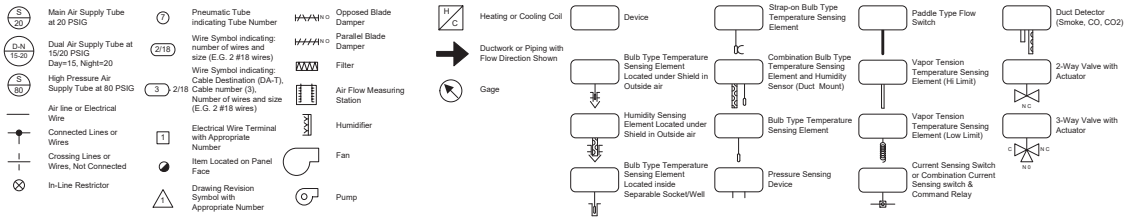

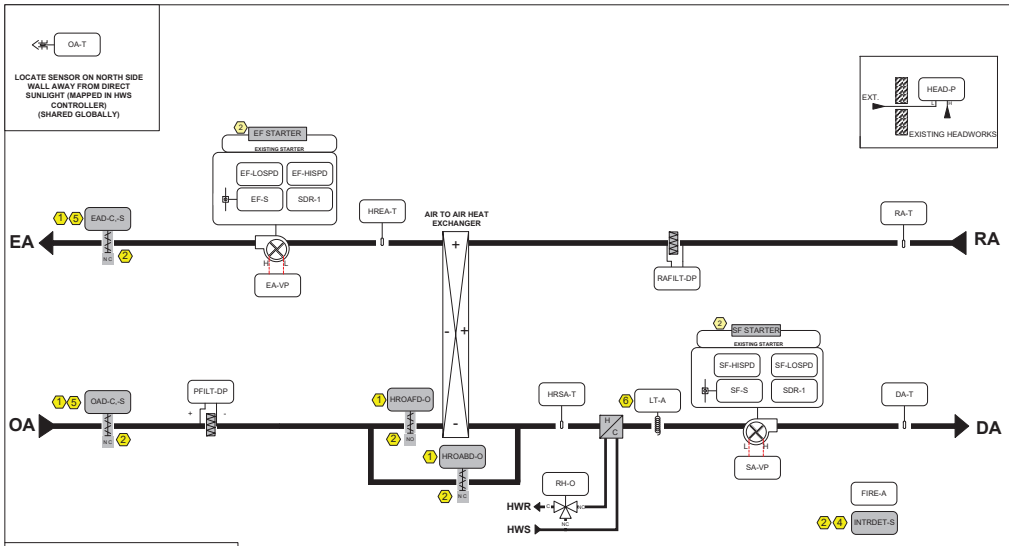

BILL OF MATERIALS

Designation	Qty	Part Number	Description
Field Devices:			
DA-T	1	TTE-112-W	XP 12" Pt1000, DUCT TEMP, HAZARDOUS LOC
EF-S	1	CSDSC-C50100L0	CURR SW SELF CAL CLMP
HEAD-P	1	A-602	MOUNTING KIT FOR AIR FILTER W/2 PRESSURE TIPS
	1	DCP-1.5-W	1.5 AMP POWER SUPPLY
	1	IX3F4S2P5IWLXFM	IS DP TRANSMITTER -2.5IN TO 2.5IN WC 0.25%
	1	MTL7706+	INTRINSIC SAFETY BARRIER, 4-20 mA 2-WIRE TRANSMITT
HREA-T	1	TTE-112-W	XP 12" Pt1000, DUCT TEMP, HAZARDOUS LOC
HROABD-O	1	ZS-260	EXPLOSION PROOF HOUSING
HROAFD-O	1	ZS-260	EXPLOSION PROOF HOUSING
HRSA-T	1	TTE-112-W	XP 12" Pt1000, DUCT TEMP, HAZARDOUS LOC
LT-A	1	HZLIM-LO-A	XP LO LIM MAN RESET 35 to 45, EXPL PROOF
RA-T	1	TTE-112-W	XP 12" Pt1000, DUCT TEMP, HAZARDOUS LOC
SF-S	1	CSDSC-C50100L0	CURR SW SELF CAL CLMP
XFILT-DP	2	A-602	MOUNTING KIT FOR AIR FILTER W/2 PRESSURE TIPS
	2	DCP-1.5-W	1.5 AMP POWER SUPPLY
	2	IX3F4SP25IWXFM	IS DP TRANSMITTER 0.25 IN WC 0.25%
	2	MTL7706+	INTRINSIC SAFETY BARRIER, 4-20 mA 2-WIRE TRANSMITT
Panel Devices:			
AHU3-CTRL	1	MS-FEC2611-0	FEC2611-0,FEC17
AHU3-IOM4	1	MS-IOM4711-0	IOM4711,IOM 17 POINT,UL
AHU3-IOM5	1	MS-IOM3721-0	MS-IOM3721-0,INPUT
EA-VP	1	DPT260-MS2	DPT MR/OUTPUT1-10WC LCD
EF-HISPD	1	RH2B-ULAC24V	DPDT,10A,HC=24 VAC,W/LED
	1	SH2B-05	DPDT RELAY BASE FOR RH2B
EF-LOSPD	1	RH2B-ULAC24V	DPDT,10A,HC=24 VAC,W/LED
	1	SH2B-05	DPDT RELAY BASE FOR RH2B
RB-1	1	RIBMNLB-2	PANEL RIB RELAY LOGIC
SA-VP	1	DPT260-MS2	DPT MR/OUTPUT1-10WC LCD
SDR-1	1	RH2B-ULAC24V	DPDT,10A,HC=24 VAC,W/LED
	1	SH2B-05	DPDT RELAY BASE FOR RH2B
SF-HISPD	1	RH2B-ULAC24V	DPDT,10A,HC=24 VAC,W/LED
	1	SH2B-05	DPDT RELAY BASE FOR RH2B
SF-LOSPD	1	RH2B-ULAC24V	DPDT,10A,HC=24 VAC,W/LED
	1	SH2B-05	DPDT RELAY BASE FOR RH2B
Other Devices:			
RH-O	1	VALVE	REFER VALVE SCHEDULE
	1	ZS-260	EXPLOSION PROOF HOUSING

NOTES:
1. REFER PANEL EN-5 DETAILS ON DWG 012.005.
2. REFER DWG 006007 FOR SAFETY WIRING DETAILS.
3. REFER DWG 006007 FOR XFILT-DP AND HEAD-P SENSOR WIRING DETAILS.
4. BELOW ARE THE DEVICES THAT WILL BE PANEL MOUNTED. EXPLOSION PROOF DEVICES ARE NOT CONSIDERED FOR THEM AS THESE ARE PANEL MOUNTED. EA-VP, SA-VP, EF-HISPD, EF-LOSPD, SF-HISPD, SF-LOSPD, SDR-1, SAFETY RELAY RB-1.

GAS DETECTION SYSTEM

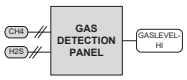

ZONE CLASSIFICATION AREA: UPPER LEVEL, CLASS-1, ZONE-2, CATEGORY-1 AREA

NOTES:
1. DAMPERS & ACTUATORS ARE EXISTING & TO BE REUSED. FIELD TO CHECK IF EXISTING ACTUATORS NEEDS EXPLOSION PROOF HOUSING. PRESENTLY WE HAVE NOT CONSIDER ANY EXPLOSION PROOF HOUSING FOR EXISTING ACTUATORS.

2. SUPPLY AND EXHAUST FAN STATUS SWITCH (SF-S, EF-S) WILL BE MOUNTED INSIDE STARTER ENCLOSURE. HENCE NO EXPLOSION PROOF DEVICE SELECTED FOR THESE DEVICES.

③ AIR HANDLING UNIT SCHEDULE

SR. NO.	SYSTEM NAME	SERVICE	S/A AIRFLOW (L/s)	E/A AIRFLOW (L/s)	SUPPLY FAN ESP (Pa)	SF HP	EXHAUST FAN ESP (Pa)	EF HP	ELEC V/PH/HZ
1	AHU-3 (EXISTING)	EXISTING HEADWORKS RM-101, 102	2740	3040	500	5	438	5	575/3/60

NOTES:
1. DAMPER & ACTUATOR ARE EXISTING AND WILL BE RE-USED. OA & EA DAMPER WILL BE COMMANDED FROM BAS.
2. DEVICES SHOWN IN GRAY ARE EXISTING AND WILL BE REUSED.
3. AHU-3 IS EXISTING UNIT INSTALLED ON THE MAIN FLOOR OF EXISTING HEADWORKS. AHU-3 CONTROL WILL BE MIGRATED TO NEW DDC.
4. DRY CONTACT "INTRDET-S" PROVIDED BY OTHERS WILL BE MONITORED ON BAS TO DETERMINE BUILDING OCCUPANCY.
5. INTERNAL AUXILIARY SWITCH OF AN EXISTING DAMPER ACTUATOR WILL BE USED FOR DAMPER STATUS MONITORING. FIELD TO VERIFY THE AVAILABILITY OF INTERNAL AUXILIARY SWITCH.
6. FIELD TO VERIFY EXACT LOCATION TO INSTALL LT-A.
7. FIRE ALARM (NO) CONTACT WILL PROVIDED BY FAS CONTRACTORS.

IN CONSIDERATION OF THE RECEIPT OF THIS DOCUMENT, THE RECIPIENT AGREES NOT TO REPRODUCE, COPY, USE OR TRANSMIT THIS DOCUMENT AND/OR THE INFORMATION THEREIN CONTAINED, IN WHOLE OR IN PART, OR TO SUFFER SUCH ACTION BY OTHERS, FOR ANY PURPOSE, EXCEPT WITH THE ADVANCE WRITTEN PERMISSION OF JOHNSON CONTROLS, INC. AND FURTHER AGREES TO SURRENDER SAME TO JOHNSON CONTROLS, INC. UPON DEMAND.

COPYRIGHT JOHNSON CONTROLS, INC. 2018

Drawing Title: **AHU-3 Flow Diagram**

Project Title: **Iqualuit Waste Water Treatment Plant Upgrades**

Rev. No.	Rev. Date	Rev. By	Rev. Description
1	07/23/2018	SH	Submittal

Account Executive	Project Owner	Drawn Designer	Drawn By	Drawing Date	Approved By	Approval Date
G. D. Montigny	Philippe Cemosek	CoEE	SH	07/23/2018		

Johnson Controls

Branch Information
Johnson Controls Ltd.
1375 Rue Frank-Carrel
Ville de Québec, QC G1N 2E7
Phone: 418-681-7958

Contract Number: **8N0Y-0079**

Drawing Number: **006.006**

H:\8N0Y0079\Drawings\AHU-3 Flow Layout.vsd

Electrician/Fitter		Point Information			Controller Information						Panel Information				Intermediate Device				Field Device				
Tag	Point Type	System Name	Object Name	Expanded ID	Controller Details	Trunk Type	Trunk Nbr	Trunk Addr.	Cable Destination Bay/Terminal	Termination Out	Panel	(1) Panel Location	Reference Drawing	Cable Number	Wiring /Tubing	Termination In	Device	Termination Out	Wiring /Tubing	Termination In	Device	Ref Detail Shape	Comment
		AHU-3			FEC 2611						EN-5	UPPER HEADWORKS, OFFICE	M601, M301										Power to Controller
		AHU-3			FEC 2611	MS/TP	1	17			EN-5	UPPER HEADWORKS, OFFICE	M601, M301										BacNet FC Bus
	UI IN-1	AHU-3	DA-T	Discharge Air Temp	FEC 2611	MS/TP	1	17	UI IN-1	IN1, ICOM1	EN-5	UPPER HEADWORKS, OFFICE	M601, M301	5-17-UI IN-1					2/22	2-Wire	TE	F131	
	UI IN-2	AHU-3	RA-T	Return Air Temp	FEC 2611	MS/TP	1	17	UI IN-2	IN2, ICOM2	EN-5	UPPER HEADWORKS, OFFICE	M601, M301	5-17-UI IN-2					2/22	2-Wire	TE	F131	
	UI IN-3	AHU-3	HREA-T	Heat Recovery Supply Air Temperature	FEC 2611	MS/TP	1	17	UI IN-3	IN3, ICOM3	EN-5	UPPER HEADWORKS, OFFICE	M601, M301	5-17-UI IN-3					2/22	2-Wire	TE	F131	
	UI IN-4	AHU-3	HREA-T	Heat Recovery Exhaust Air Temperature	FEC 2611	MS/TP	1	17	UI IN-4	IN4, ICOM4	EN-5	UPPER HEADWORKS, OFFICE	M601, M301	5-17-UI IN-4					2/22	2-Wire	TE	F131	
	UI IN-5	AHU-3			FEC 2611	MS/TP	1	17	UI IN-5		EN-5	UPPER HEADWORKS, OFFICE	M601, M301	5-17-UI IN-5									
	UI IN-6	AHU-3			FEC 2611	MS/TP	1	17	UI IN-6		EN-5	UPPER HEADWORKS, OFFICE	M601, M301	5-17-UI IN-6									
	BI IN-7	AHU-3	LT-A	Low Temp Alarm	FEC 2611	MS/TP	1	17	BI IN-7	IN7, ICOM7	EN-5	UPPER HEADWORKS, OFFICE	M601, M301	5-17-BI IN-7					2/22	See wiring detail	Dry Contact	F301	
	BI IN-8	AHU-3	SF-S	Supply Fan Status	FEC 2611	MS/TP	1	17	BI IN-8	IN8, ICOM8	EN-5	UPPER HEADWORKS, OFFICE	M601, M301	5-17-BI IN-8	2/22	OUT, COM	Current Relay	Motor Lead	2/22	See wiring detail	Dry Contact	F301	
	BO OUT-1	AHU-3	OAD-C	OA Damper Command	FEC 2611	MS/TP	1	17	BO OUT-1	OUT1, 24V COM	EN-5	UPPER HEADWORKS, OFFICE	M601, M301	5-17-BO OUT-1					2/18	See wiring detail	24VAC OUT (Sw Hi, EXT Source)	F501	
	BO OUT-2	AHU-3	EAD-C	EA Damper Command	FEC 2611	MS/TP	1	17	BO OUT-2	OUT2, 24V COM	EN-5	UPPER HEADWORKS, OFFICE	M601, M301	5-17-BO OUT-2					2/18	See wiring detail	24VAC OUT (Sw Hi, EXT Source)	F501	
	BO OUT-3	AHU-3			FEC 2611	MS/TP	1	17	BO OUT-3		EN-5	UPPER HEADWORKS, OFFICE	M601, M301	5-17-BO OUT-3									
	CO OUT-4	AHU-3	SF-HISPD	Supply Fan HI Speed	FEC 2611	MS/TP	1	17	CO OUT-4	OUT4, 24V COM	EN-5	UPPER HEADWORKS, OFFICE	M601, M301	5-17-CO OUT-4	2/22	COIL-, COIL+	Relay	COM, NO	2/14	See wiring detail	Starter (2Spd w/Safety) (Sw Hi, EXT)	F1010	
	CO OUT-5	AHU-3	SF-LOSPD	Supply Fan Low Speed	FEC 2611	MS/TP	1	17	CO OUT-5	OUT5, 24V COM	EN-5	UPPER HEADWORKS, OFFICE	M601, M301	5-17-CO OUT-5	2/22	COIL-, COIL+	Relay	COM, NO	2/14	See wiring detail	Starter (2Spd w/Safety) (Sw Hi, EXT)	F1010	
	CO OUT-6	AHU-3			FEC 2611	MS/TP	1	17	CO OUT-6		EN-5	UPPER HEADWORKS, OFFICE	M601, M301	5-17-CO OUT-6									
	CO OUT-7	AHU-3			FEC 2611	MS/TP	1	17	CO OUT-7		EN-5	UPPER HEADWORKS, OFFICE	M601, M301	5-17-CO OUT-7									
	AO OUT-8	AHU-3	HROAFD-O	Heat Recovery OA Face Damper Output	FEC 2611	MS/TP	1	17	AO OUT-8	OUT8, OCOM8	EN-5	UPPER HEADWORKS, OFFICE	M601, M301	5-17-AO OUT-8					2/22	See wiring detail	Output (Voltage)	F201	
	AO OUT-9	AHU-3	HROABD-O	Heat Recovery OA Bypass Damper Output	FEC 2611	MS/TP	1	17	AO OUT-9	OUT9, OCOM9	EN-5	UPPER HEADWORKS, OFFICE	M601, M301	5-17-AO OUT-9					2/22	See wiring detail	Output (Voltage)	F201	
		AHU-3			IOM 4711						EN-5	UPPER HEADWORKS, OFFICE	M601, M301										Power to Controller
		AHU-3			IOM 4711	SA Bus	1	4			EN-5	UPPER HEADWORKS, OFFICE	M601, M301										BacNet SA Bus
	UI IN-1	AHU-3	HEAD-P	Headwork Static Pressure	IOM 4711	SA Bus	1	4	UI IN-1	IN1, ICOM1	EN-5	UPPER HEADWORKS, OFFICE	M601, M301	17-5-4-UI IN-1					2/18	See wiring detail	Current Input (Loop Pwr)	F104	
	UI IN-2	AHU-3	PFILT-DP	PreFilter Diff Pressure	IOM 4711	SA Bus	1	4	UI IN-2	IN2, ICOM2	EN-5	UPPER HEADWORKS, OFFICE	M601, M301	17-5-4-UI IN-2					2/18	See wiring detail	Current Input (Loop Pwr)	F104	
	UI IN-3	AHU-3	RAFILT-DP	Return Filter Diff Pressure	IOM 4711	SA Bus	1	4	UI IN-3	IN3, ICOM3	EN-5	UPPER HEADWORKS, OFFICE	M601, M301	17-5-4-UI IN-3					2/18	See wiring detail	Current Input (Loop Pwr)	F104	
	UI IN-4	AHU-3	SA-VP	Supply Air Vel Press	IOM 4711	SA Bus	1	4	UI IN-4	IN4, +15V	EN-5	UPPER HEADWORKS, OFFICE	M601, M301	17-5-4-UI IN-4					2/22	-, +	DPT2xxx (mA)	F106	
	UI IN-5	AHU-3	EA-VP	Exhaust Air Vel Press	IOM 4711	SA Bus	1	4	UI IN-5	IN5, +15V	EN-5	UPPER HEADWORKS, OFFICE	M601, M301	17-5-4-UI IN-5					2/22	-, +	DPT2xxx (mA)	F106	
	UI IN-6	AHU-3			IOM 4711	SA Bus	1	4	UI IN-6		EN-5	UPPER HEADWORKS, OFFICE	M601, M301	17-5-4-UI IN-6									
	BI IN-7	AHU-3	GASLEVEL-HI	Gas High Level	IOM 4711	SA Bus	1	4	BI IN-7	IN7, ICOM7	EN-5	UPPER HEADWORKS, OFFICE	M601, M301	17-5-4-BI IN-7					2/22	See wiring detail	Dry Contact	F301	
	BI IN-8	AHU-3	EF-S	Exhaust Fan Status	IOM 4711	SA Bus	1	4	BI IN-8	IN8, ICOM8	EN-5	UPPER HEADWORKS, OFFICE	M601, M301	17-5-4-BI IN-8	2/22	OUT, COM	Current Relay	Motor Lead	2/22	See wiring detail	Dry Contact	F301	
	BO OUT-1	AHU-3	EF-HISPD	Exhaust Fan HI Speed	IOM 4711	SA Bus	1	4	BO OUT-1	OUT1, 24V COM	EN-5	UPPER HEADWORKS, OFFICE	M601, M301	17-5-4-BO OUT-1	2/22	COIL-, COIL+	Relay	COM, NO	2/14	See wiring detail	Starter (2Spd, Tower Vib) (Sw Hi, EXT)	F1010	
	BO OUT-2	AHU-3	EF-LOSPD	Exhaust Fan Low Speed	IOM 4711	SA Bus	1	4	BO OUT-2	OUT2, 24V COM	EN-5	UPPER HEADWORKS, OFFICE	M601, M301	17-5-4-BO OUT-2	2/22	COIL-, COIL+	Relay	COM, NO	2/14	See wiring detail	Starter (2Spd, Tower Vib) (Sw Hi, EXT)	F1010	
	BO OUT-3	AHU-3			IOM 4711	SA Bus	1	4	BO OUT-3		EN-5	UPPER HEADWORKS, OFFICE	M601, M301	17-5-4-BO OUT-3									
	CO OUT-4	AHU-3			IOM 4711	SA Bus	1	4	CO OUT-4		EN-5	UPPER HEADWORKS, OFFICE	M601, M301	17-5-4-CO OUT-4									
	CO OUT-5	AHU-3			IOM 4711	SA Bus	1	4	CO OUT-5		EN-5	UPPER HEADWORKS, OFFICE	M601, M301	17-5-4-CO OUT-5									
	CO OUT-6	AHU-3			IOM 4711	SA Bus	1	4	CO OUT-6		EN-5	UPPER HEADWORKS, OFFICE	M601, M301	17-5-4-CO OUT-6									
	CO OUT-7	AHU-3			IOM 4711	SA Bus	1	4	CO OUT-7		EN-5	UPPER HEADWORKS, OFFICE	M601, M301	17-5-4-CO OUT-7									
	AO OUT-8	AHU-3	RH-O	Reheat Output	IOM 4711	SA Bus	1	4	AO OUT-8	OUT8, OCOM8,24VAC, COM	EN-5	UPPER HEADWORKS, OFFICE	M601, M301	17-5-4-AO OUT-8					2/22 / 2/18	GRY, BLK/BLK, RED	MS2xx-GGx-x (Vdc) (Ext Source)	F267	
	AO OUT-9	AHU-3			IOM 4711	SA Bus	1	4	AO OUT-9		EN-5	UPPER HEADWORKS, OFFICE	M601, M301	17-5-4-AO OUT-9									
		AHU-3			IOM 3721						EN-5	UPPER HEADWORKS, OFFICE	M601, M301										Power to Controller
		AHU-3			IOM 3721	SA Bus	1	5			EN-5	UPPER HEADWORKS, OFFICE	M601, M301										BacNet SA Bus
	BI IN-1	AHU-3	OAD-S	OA Damper Status	IOM 3721	SA Bus	1	5	BI IN-1	IN1, ICOM1	EN-5	UPPER HEADWORKS, OFFICE	M601, M301	17-5-5-BI IN-1					2/22	See wiring detail	Dry Contact	F301	
	BI IN-2	AHU-3	EAD-S	EA Damper Status	IOM 3721	SA Bus	1	5	BI IN-2	IN2, ICOM2	EN-5	UPPER HEADWORKS, OFFICE	M601, M301	17-5-5-BI IN-2					2/22	See wiring detail	Dry Contact	F301	
	BI IN-3	AHU-3	FIRE-A	Fire Alarm	IOM 3721	SA Bus	1	5	BI IN-3	IN3, ICOM3	EN-5	UPPER HEADWORKS, OFFICE	M601, M301	17-5-5-BI IN-3					2/22	See wiring detail	Dry Contact	F301	
	BI IN-4	AHU-3	INTRDET-S	Intrusion Detection System Status	IOM 3721	SA Bus	1	5	BI IN-4	IN4, ICOM4	EN-5	UPPER HEADWORKS, OFFICE	M601, M301	17-5-5-BI IN-4					2/22	See wiring detail	Dry Contact	F301	
SUMP PUMP	BI IN-5	AHU-3	SUMP2.1-S	Sump Pump 2.1 Status	IOM 3721	SA Bus	1	5	BI IN-5	IN5, ICOM5	EN-5	UPPER HEADWORKS, OFFICE	M601, M301	17-5-5-BI IN-5					2/22	See wiring detail	Dry Contact	F301	REFER DWG 011.001
SUMP PUMP	BI IN-6	AHU-3	SUMP2.2-S	Sump Pump 2.2 Status	IOM 3721	SA Bus	1	5	BI IN-6	IN6, ICOM6	EN-5	UPPER HEADWORKS, OFFICE	M601, M301	17-5-5-BI IN-6					2/22	See wiring detail	Dry Contact	F301	REFER DWG 011.001
SUMP PUMP	BI IN-7	AHU-3	SPHL2.1 & 2.2-A	Sump Pump 2.1 & 2.2 High Level Alarm	IOM 3721	SA Bus	1	5	BI IN-7	IN7, ICOM7	EN-5	UPPER HEADWORKS, OFFICE	M601, M301	17-5-5-BI IN-7					2/22	See wiring detail	Dry Contact	F301	REFER DWG 011.001
SUMP PUMP	BI IN-8	AHU-3	SUMP2.1-A	Sump Pump 2.1 Alarm	IOM 3721	SA Bus	1	5	BI IN-8	IN8, ICOM8	EN-5	UPPER HEADWORKS, OFFICE	M601, M301	17-5-5-BI IN-8					2/22	See wiring detail	Dry Contact	F301	REFER DWG 011.001
SUMP PUMP	BI IN-9	AHU-3	SUMP2.2-A	Sump Pump 2.2 Alarm	IOM 3721	SA Bus	1	5	BI IN-9	IN9, ICOM9	EN-5	UPPER HEADWORKS, OFFICE	M601, M301	17-5-5-BI IN-9					2/22	See wiring detail	Dry Contact	F301	REFER DWG 011.001
	BI IN-10	AHU-3			IOM 3721	SA Bus	1	5	BI IN-10		EN-5	UPPER HEADWORKS, OFFICE	M601, M301	17-5-5-BI IN-10									
	BI IN-11	AHU-3			IOM 3721	SA Bus	1	5	BI IN-11		EN-5	UPPER HEADWORKS, OFFICE	M601, M301	17-5-5-BI IN-11									
	BI IN-12	AHU-3			IOM 3721	SA Bus	1	5	BI IN-12		EN-5	UPPER HEADWORKS, OFFICE	M601, M301	17-5-5-BI IN-12									
	BI IN-13	AHU-3			IOM 3721	SA Bus	1	5	BI IN-13		EN-5	UPPER HEADWORKS, OFFICE	M601, M301	17-5-5-BI IN-13									
	BI IN-14	AHU-3			IOM 3721	SA Bus	1	5	BI IN-14		EN-5	UPPER HEADWORKS, OFFICE	M601, M301	17-5-5-BI IN-14									
	BI IN-15	AHU-3			IOM 3721	SA Bus	1	5	BI IN-15		EN-5	UPPER HEADWORKS, OFFICE	M601, M301	17-5-5-BI IN-15									
	BI IN-16	AHU-3			IOM 3721	SA Bus	1	5	BI IN-16		EN-5	UPPER HEADWORKS, OFFICE	M601, M301	17-5-5-BI IN-16									

NOTE:

(1) FIELD TO VERIFY EXACT LOCATION TO INSTALL PANEL.

IN CONSIDERATION OF THE RECEIPT OF THIS DOCUMENT, THE RECIPIENT AGREES NOT TO REPRODUCE, COPY, USE OR TRANSMIT THIS DOCUMENT AND/OR THE INFORMATION THEREIN CONTAINED, IN WHOLE OR IN PART, OR TO SUFFER SUCH ACTION BY OTHERS, FOR ANY PURPOSE, EXCEPT WITH THE ADVANCE WRITTEN PERMISSION OF JOHNSON CONTROLS, INC. AND FURTHER AGREES TO SURRENDER SAME TO JOHNSON CONTROLS, INC. UPON DEMAND.

COPYRIGHT JOHNSON CONTROLS, INC. 2018

Drawing Title
AHU-3 Hardware Schedule

Rev. Nbr.	Rev.	Date	Rev. By	Rev. Description
1	1	07/23/2018	SH	Submittal

Account Executive	Project Owner	System Designer	Drawn By	Drawing Date	Approved By	Approval Date
G. D. Montigny	Philippe Cernosek	CoEE	SH	07/23/2018		

Project Title
Iqualuit Waste Water Treatment Plant Upgrades

Johnson Controls

Branch Information
Johnson Controls Ltd.
1375 Rue Frank-Carrel
Ville de Québec, QC G1N 2E7
Phone: 418-681-7958

Contract Number
8N0Y-0079

Drawing Number
006.008

H:\8N0Y0079\Drawings\AHU-3 Hardware Schedule.vsd

SEQUENCE OF OPERATION:

GENERAL:
AHU-3 IS AN EXISTING CUSTOM BUILT 100% OUTDOOR AIR UNIT COMPLETE WITH TWO (2) TWO-SPEED FANS, AN AIR-TO-AIR FIXED PLATE HEAT EXCHANGER, DEFROST BYPASS DAMPERS, A REHEAT HYDRONIC HEATING COIL AND EXHAUST AND OUTDOOR AIR DAMPERS. THE UNIT IS INSTALLED ON THE MAIN FLOOR OF THE EXISTING HEADWORKS BUILDING AND SERVICES THE EXISTING HEADWORKS ROOM.

SUPPLY & EXHAUST FAN CONTROL (SF, EF):
1. EXISTING AHU-3 CONSISTS OF A TWO SPEED SUPPLY AND EXHAUST AIR FAN, REHEAT COIL, DEFROST BYPASS, HEAT RECOVERY SECTION AND FILTER SECTION.

2. AHU-3 AIR SYSTEM TO OPERATES CONTINUOUSLY. AHU-3 WILL NORMALLY OPERATE WITH THE SUPPLY FANS AND EXHAUST FAN AT 50% SPEED TO PROVIDE 6 ACH OF CONTINUOUS VENTILATION.

3. WHEN INTRUSION DETECTION SYSTEM IS DISABLED DETECTED BY "INTRDET-S" (I.E. WHEN BUILDING IS OCCUPIED) OR WHEN THE GAS DETECTION SYSTEM IS ACTIVATED, OR WHEN THE OUTSIDE AIR TEMPERATURE IS ABOVE 10 DEG C, THE SUPPLY FAN AND EXHAUST FAN WILL SWITCH TO SPEED 2 (100% SPEED) TO PROVIDE 12 ACH OF CONTINUOUS VENTILATION. FINAL FAN SPEEDS TO BE DETERMINED DURING COMMISSIONING.

4. GAS DETECTION BY PLC CONTRACTOR. INTERLOCK PLC I/O WITH DDC AHU CONTROLS.

5. IN EVENT OF EITHER SUPPLY FAN FAILURE OR EXHAUST FAN FAILURE, ALARM TROUBLE AT OWS.

6. FAN STATUS AT OPERATOR WORKSTATION WILL BE SHOWN.

7. AIR CHANGE PER HOUR (ACH) RATE AT OPERATOR WORKSTATION WILL BE SHOWN.

8. RELATIVE SPACE PRESSURE AT OPERATOR WORKSTATION WILL BE SHOWN.

9. AIR FILTER DP AT OPERATOR WORKSTATION WILL BE SHOWN.

10. AHU-3 HEAT TRANSFER CORE "DEFROST MODE" BYPASS DAMPERS ARE NORMALLY CLOSED (FULL AIR FLOW THROUGH HEAT EXCHANGER). BAS TO SWITCH AHU-3 TO DEFROST MODE WHEN SUPPLY AIR TEMPERATURE DOWNSTREAM OF HEX AND UPSTREAM OF REHEAT COIL IS LESS 5 DEG C AS SENSED BY AVERAGING TYPE DUCT TEMPERATURE SENSOR. IN "DEFROST MODE", BAS MODULATES AHU-3 FACE AND BYPASS DAMPERS TO MAINTAIN EXHAUST AIR TEMPERATURE ABOVE 2 DEG C.

REHEAT COIL:
1. NEW 3-WAY CONTROL VALVE FOR AHU-3 IS PROVIDED.

2. BAS WILL MODULATE AHU-3 REHEAT COIL 3-WAY CONTROL VALVE TO SATISFY SUPPLY AIR TEMPERATURE (DA-T) SETPOINT. INITIAL SETPOINT = 10 DEG C.

IN EVENT THAT SAT TEMPERATURE IS LESS THAN 5 DEG C AS SENSED BY DUCT MOUNTED AVERAGING TYPE TEMPERATURE SENSOR, ALARM TROUBLE AT OWS.

SAFETY INTERLOCK:
1 *1. OUTSIDE AIR AND EXHAUST AIR DAMPER STATUS WILL BE MONITORED AT BAS. SUPPLY FAN AND EXHAUST FAN WILL BE ENABLED ONCE BOTH OUTSIDE AIR AND EXHAUST AIR DAMPER OPEN STATUS IS PROVEN AT BAS.*

2. LOW TEMPERATURE ALARM (LT-A) - WHEN IN "ALARM", THE CONTROL SEQUENCE WILL STOP RUNNING, THE VALVE(S) WILL OPEN AND THE FAN(S) WILL BE DISABLED VIA A HARD WIRED SHUTDOWN CIRCUIT.

3. FIRE ALARM CONTACT WILL BE HARDWIRED INTERLOCKED WITH SUPPLY FAN AND EXHAUST FAN STARTER I.E. WHEN IN ALARM, FANS WILL GET SHUT-DOWN.

MONITORING POINTS FROM BAS:
1. OUTDOOR AIR TEMPERATURE (OA-T)
2. HR EXHAUST AIR TEMPERATURE (HREA-T)
3. RETURN AIR TEMPERATURE (RA-T)
4. SUPPLY AIR FLOW (DA-VP)
5. EXHAUST AIR FLOW (EA-VP)
6. LOW TEMPERATURE ALARM (LT-A)
7. SUPPLY AIR TEMPERATURE (DA-T).

AHU-3 SAFETY WIRING DETAILS

RELAY LOGIC BOARD(RIBMNLB-2)

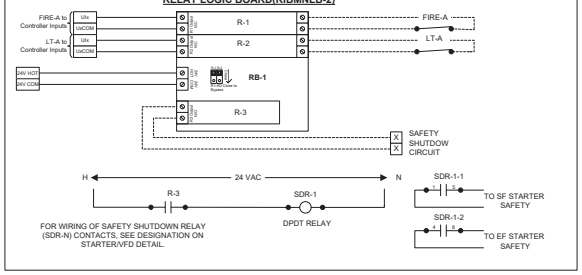

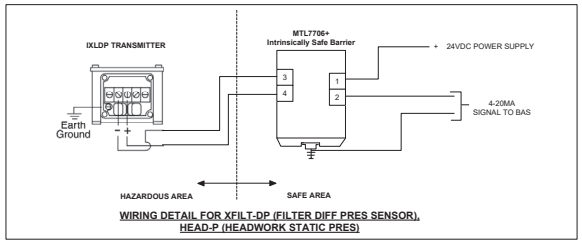

WIRING DETAIL FOR XFILT-DP (FILTER DIFF PRES SENSOR), HEAD-P (HEADWORK STATIC PRES)

Notes:
1 SEQUENCE OF OPERATION IN ITALIC IS BE PROPOSED BY JCI. PROPOSED SEQUENCE TO BE VERIFIED BY FIELD BEFORE PROGRAMMING.

IN CONSIDERATION OF THE RECEIPT OF THIS DOCUMENT, THE RECIPIENT AGREES NOT TO REPRODUCE, COPY, USE OR TRANSMIT THIS DOCUMENT AND/OR THE INFORMATION THEREIN CONTAINED, IN WHOLE OR IN PART, OR TO SUFFER SUCH ACTION BY OTHERS, FOR ANY PURPOSE, EXCEPT WITH THE ADVANCE WRITTEN PERMISSION OF JOHNSON CONTROLS, INC. AND FURTHER AGREES TO SURRENDER SAME TO JOHNSON CONTROLS, INC. UPON DEMAND.

COPYRIGHT JOHNSON CONTROLS, INC. 2018

Drawing Title: AHU-3 Sequence of Operation

Project Title: Iqualuit Waste Water Treatment Plant Upgrades

Rev. No.	Rev. Date	Rev. By	Rev. Description
1	07/23/2018	SH	Submittal

Account Executive	Project Owner	System Designer	Drawn By	Drawing Date	Approved By	Approval Date
G. D. Montigny	Philippe Cemosek	CcEE	SH	07/23/2018		

Johnson Controls

Branch Information
Johnson Controls Ltd.
1375 Rue Frank-Carrel
Ville de Québec, QC G1N 2E7
Phone: 418-681-7958

Contract Number: 8N0Y-0079

Drawing Number: 006.007

H:\8N0Y0079\Drawings\AHU-3 Sequence of Operation.vsd

DETAIL F131 TEMPERATURE SENSOR INPUT

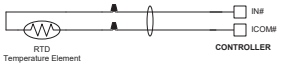

DETAIL F106 CURRENT INPUT - INTERNAL SOURCE (2 Wire)

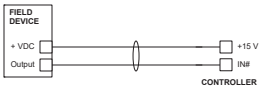

DETAIL F301 BINARY INPUT (DRY CONTACT)

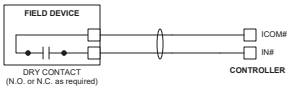

DETAIL F1010 Starter 2 Speed with Safety

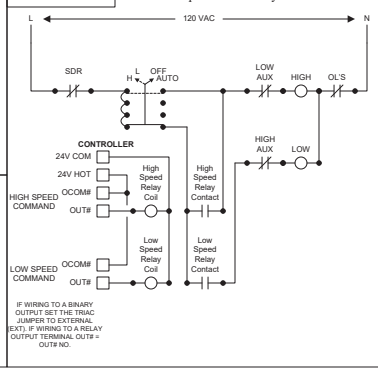

DETAIL F102 VOLTAGE INPUT - INTERNAL SOURCE

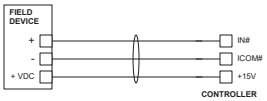

DETAIL F501 24 VAC BINARY OUTPUT (Switch High, EXT Sourced)

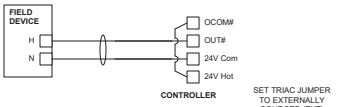

SET TRIAC JUMPER TO EXTERNALLY SOURCED (EXT) FOR ASSOCIATED BINARY OUTPUT(S).

DETAIL F267 0-10VDC OUTPUT to M92xx-GGx and HGx or VA92xx-GGx and HGx

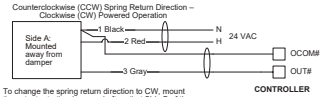

To change the spring return direction to CW, mount the actuator to the damper shaft so that Side B of the actuator is away from the damper. With power applied, the actuator now drives CCW from the 0° position, and spring returns CW.

DETAIL F104 CURRENT INPUT - EXTERNAL SOURCE (in Loop)

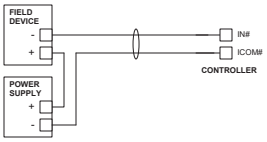

DETAIL F201 ANALOG OUTPUT (VOLTAGE)

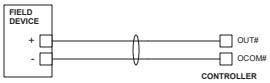

IN CONSIDERATION OF THE RECEIPT OF THIS DOCUMENT, THE RECIPIENT AGREES NOT TO REPRODUCE, COPY, USE OR TRANSMIT THIS DOCUMENT AND/OR THE INFORMATION THEREIN CONTAINED, IN WHOLE OR IN PART, OR TO SUFFER SUCH ACTION BY OTHERS, FOR ANY PURPOSE, EXCEPT WITH THE ADVANCE WRITTEN PERMISSION OF JOHNSON CONTROLS, INC. AND FURTHER AGREES TO SURRENDER SAME TO JOHNSON CONTROLS, INC. UPON DEMAND.

COPYRIGHT JOHNSON CONTROLS, INC. 2018

Drawing Title
AHU-3 Wiring Details

Project Title
Iqualuit Waste Water Treatment Plant Upgrades

Rev. No.	Rev. Date	By	Rev. Description
1	07/23/2018	SH	Submittal

Account Executive	Project Owner	System Designer	Drawn By	Drawing Date	Approved By	Approval Date
G. D. Montigny	Philippe Cernosek	CoEE	SH	07/23/2018		

Johnson Controls

Branch Information
Johnson Controls Ltd.
1375 Rue Frank-Carrel
Ville de Québec, QC G1N 2E7
Phone: 418-681-7958

Contract Number
8N0Y-0079

Drawing Number
006.009

H:\8N0Y0079\Drawings\AHU-3 Wiring Details.vsd

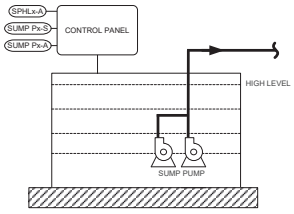

SUMP PUMP

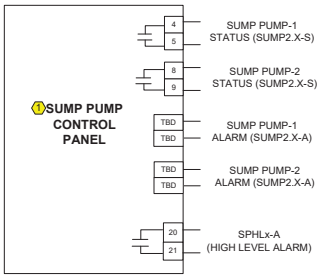

SUMP PUMP SCHEDULE

S.NO	SYSTEM NAME	FLOOR	MAPPED IN	REFER DWG	POINTS MAPPED	MECH DWG	ZONE/CLASS
1	P2.1/P2.2	LOWER LEVEL	AHU3-CP	006.007	SPHL2.1 & 2.2-A, SUMP2.1-A, SUMP2.2-A, SUMP2.1-S, SUMP2.2-S	M201	AREA B-2, CLASS-1
2	P2.3/P2.4	LOWER LEVEL	WSRS-CP	003.002	SPHL2.3 & 2.4-A, SUMP2.3-A, SUMP2.4-A, SUMP2.3-S, SUMP2.4-S	M201	AREA C-6, WET
3	P2.5/P2.6	LOWER LEVEL	WSRS-CP	003.002	SPHL2.5 & 2.6-A, SUMP2.5-A, SUMP2.6-A, SUMP2.5-S, SUMP2.6-S	M201	AREA E-4, WET

SEQUENCE OF OPERATION:

1. EXISTING SUMP PUMPS P-2.1, P-2.2, P-2.3 AND P-2.4 ARE EXISTING SUBMERSIBLE PUMPS THAT WILL BE REPLACED AS PART OF THIS CONTRACT. THE EXISTING PUMP CONTROL PANEL FOR EACH PAIR OF PUMPS WILL ALSO BE REPLACED.
2. SUMP PUMPS P-2.5 AND P-2.6 ARE NEW SUBMERSIBLE SUMP PUMPS NEW CONTROL PANELS ARE TO BE PROVIDED FOR EACH PAIR OF SUMP PUMPS.
3. SUMP PUMPS OPERATE AS DUTY/STANDBY. DUTY PUMP SWITCHES AFTER EACH RUN CYCLE.
4. SUMP PUMP CONTROLS INCLUDES FOUR (4) LEVEL SWITCHES.
   1. DUTY PUMP ON WHEN PUMP START SUMP LEVEL SWITCH ENABLED.
   2. DUTY PUMP OFF WHEN PUMP STOP SUMP LEVEL SWITCH ENABLED.
   3. STANDBY PUMP ON WHEN 3RD SUMP LEVEL SWITCH (HIGH LEVEL) ENABLED SO BOTH PUMPS ON. BOTH PUMP OFF WHEN PUMP STOP SUMP LEVEL SWITCH ENABLED.
4. ALARM HIGH LEVEL WHEN SUMP HIGH LEVEL SWITCH ENABLED.
5. INDICATE SUMP PUMP STATUS AT OWS.

NOTES:

1. FILED TO VERIFY EXACT TERMINAL NUMBERS BEFORE WIRING.

IN CONSIDERATION OF THE RECEIPT OF THIS DOCUMENT, THE RECIPIENT AGREES NOT TO REPRODUCE, COPY, USE OR TRANSMIT THIS DOCUMENT AND/OR THE INFORMATION THEREIN CONTAINED, IN WHOLE OR IN PART, OR TO SUFFER SUCH ACTION BY OTHERS, FOR ANY PURPOSE, EXCEPT WITH THE ADVANCE WRITTEN PERMISSION OF JOHNSON CONTROLS, INC. AND FURTHER AGREES TO SURRENDER SAME TO JOHNSON CONTROLS, INC. UPON DEMAND.

COPYRIGHT JOHNSON CONTROLS, INC. 2018

Drawing Title: **Sump Pump Flow Diagram**

Project Title: **Iqualuit Waste Water Treatment Plant Upgrades**

No.	Date	Rev. By	Description
1	07/23/2018	SH	Submittal

Account Executive	Project Owner	System Designer	Drawn By	Drawing Date	Approved By	Approval Date
G. D. Montigny	Philippe Cemosek	CcEE	SH	07/23/2018		

Johnson Controls

Branch Information
Johnson Controls Ltd.
1375 Rue Frank-Carrel
Ville de Québec, QC G1N 2E7
Phone: 418-681-7958

Contract Number: **8N0Y-0079**

Drawing Number: **011.001**

110.109.192.72\Field Engineering\HVAC\CANADA-HOUSTON\FY-18\PFM\8N0Y0079\Drawings\Sump Pump Flow Layout.vsd

SECTION 5
DDC PANEL LAYOUT

NETWORK RISER

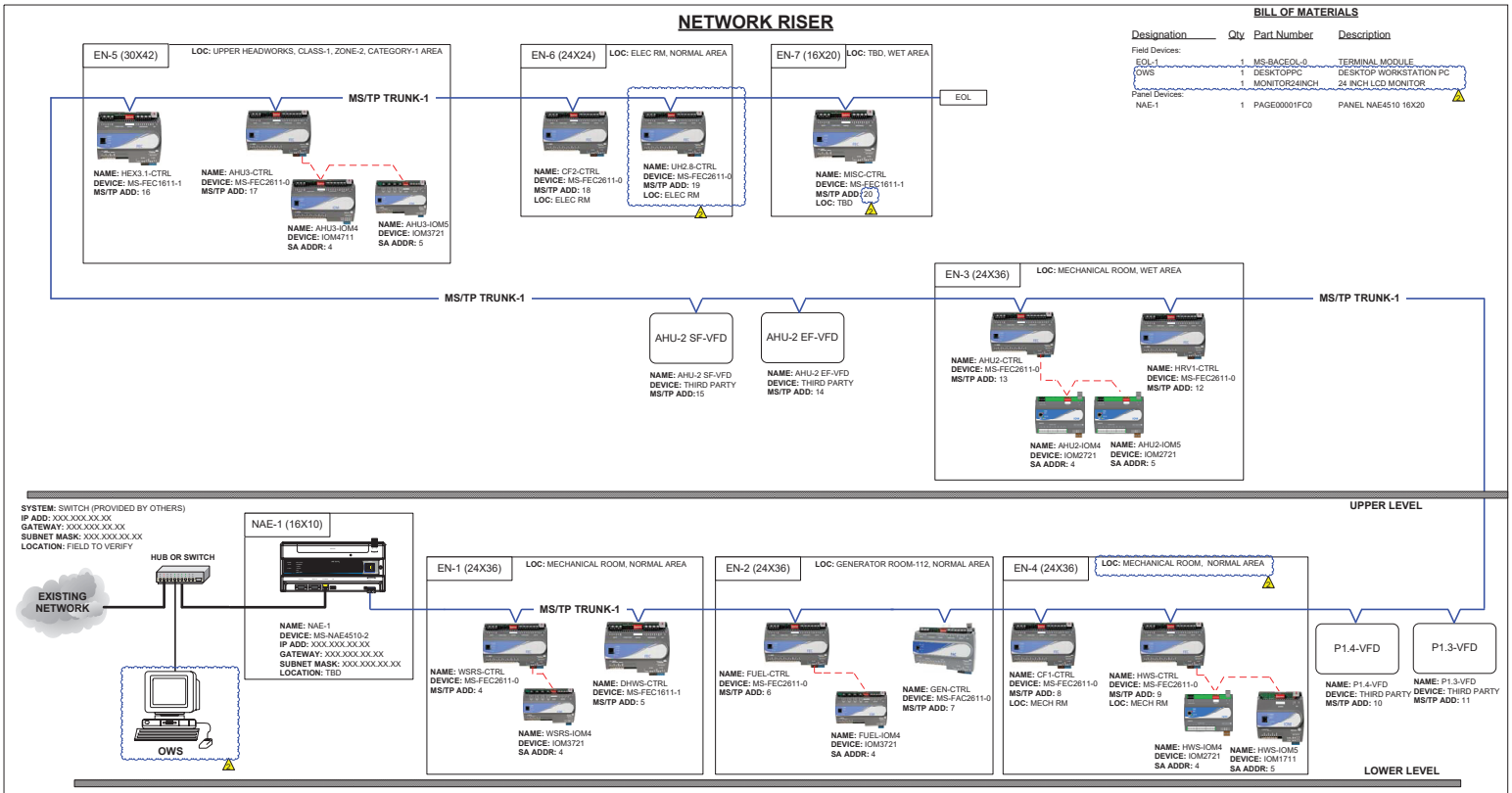

BILL OF MATERIALS

Designation	Qty	Part Number	Description
Field Devices:			
EOL-1	1	MS-BACEOL-0	TERMINAL MODULE
OWS	1	DESKTOPPC	DESKTOP WORKSTATION PC
	1	MONITOR24INCH	24 INCH LCD MONITOR
Panel Devices:			
NAE-1	1	PAGE00001FC0	PANEL NAE4510 16X20

Notes:

1. THIS IS REPRESENTATION OF THE NETWORK ARCHITECTURE WHICH MAY VARY AS PER SITE CONDITION.

SA TRUNK TERMINATION



NOTE: GROUND SHIELD ONLY ONCE, AT THE FEU.

FC TRUNK TERMINATION



NOTE: GROUND SHIELD ONLY ONCE, AT THE NAE.

WIRING LEGEND

FC BUS – 22 AWG STRANDED, 3-WIRE TWISTED, SHIELDED CABLE

SA BUS – 22 AWG STRANDED, 4-WIRE, 2-TWISTED PAIR, SHIELDED CABLE

IP / ETHERNET

IN CONSIDERATION OF THE RECEIPT OF THIS DOCUMENT, THE RECIPIENT AGREES NOT TO REPRODUCE, COPY, USE OR TRANSMIT THIS DOCUMENT AND/OR THE INFORMATION THEREIN CONTAINED, IN WHOLE OR IN PART, OR TO SUFFER SUCH ACTION BY OTHERS, FOR ANY PURPOSE, EXCEPT WITH THE ADVANCE WRITTEN PERMISSION OF JOHNSON CONTROLS, INC. AND FURTHER AGREES TO SURRENDER SAME TO JOHNSON CONTROLS, INC. UPON DEMAND.

COPYRIGHT JOHNSON CONTROLS, INC. 2018

Drawing Title: **Network Riser**

Project Title: **Iqaluit Waste Water Treatment Plant Upgrades**

Rev.	Mark	Date	By	Description
2		10/11/2018	SH	Re-Submittal
1		07/23/2018	SH	Submittal

Account Executive	Project Owner	System Designer	Drawn By	Drawing Date	Approved By	Approval Date
G. D. Montigny	Philippe Cernosek	CoEE	SH	07/23/2018		

Johnson Controls

Branch Information
Johnson Controls Ltd.
1375 Rue Frank-Carrel
Ville de Québec, QC G1N 2E7
Phone: 418-681-7958

Contract Number: **8N0Y-0079**

Drawing Number: **001.001**

H:\8N0Y0079\Drawings\Network Riser .vsd

PANEL EN-5 LAYOUT

UPPER LEVEL EXISTING HEADWORK

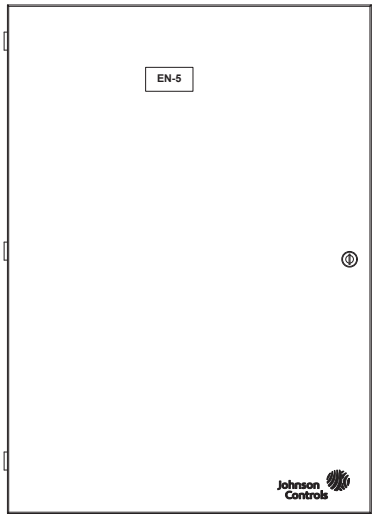

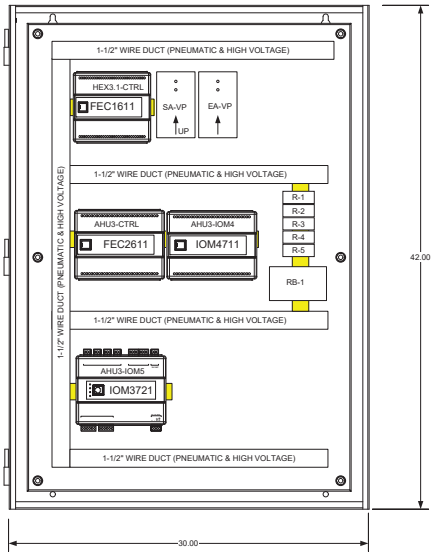

PANEL EN-5, UPPER LEVEL EXISTING HEADWORKS				
SR NO	**DEVICE**	**PART**	**SYSTEM ASSOCIATED**	**REFER DWG**
1	AHU3-CTRL	MS-FEC2611-0	AHU-3	002.001
2	AHU3-IOM4	MS-IOM4711-0	AHU-3	002.001
3	AHU3-IOM5	MS-IOM3721-0	AHU-3	002.001
4	HEX3.1-CTRL	MS-FEC1611-1	HEX-3.1	004.001
5	SA-VP	DPT260-MS2	AHU-3	002.001
6	EA-VP	DPT260-MS2	AHU-3	002.001
7	RB-1	RIBMNLB-2	AHU-3	002.001
8	R-1 (SF-HISPD)	RH2B-ULAC24V	AHU-3	002.001
9	R-2 (SF-LOSPD)	RH2B-ULAC24V	AHU-3	002.001
10	R-3 (EF-HISPD)	RH2B-ULAC24V	AHU-3	002.001
11	R-4 (EF-LOSPD)	RH2B-ULAC24V	AHU-3	002.001
12	R-5 (SDR-1)	RH2B-ULAC24V	AHU-3	002.001

TRANSFORMER VA REQUIRED					
SR NO	**DEVICE**	**PART**	**QTY**	**VA REQUIRED**	**TOTAL VA RATING (xQTY)**
1	HEX3.1-CTRL	MS-FEC1611-0	1	14	14
2	AHU3-CTRL	MS-FEC2611-0	1	14	14
3	AHU3-IOM4	MS-IOM4711-0	1	14	14
4	AHU3-IOM5	MS-IOM3721-0	1	14	14
5	HX3.1V-O	VLV ACTUATOR	1	6	6
6	CURRENT SW	CSDSC-C501001L1	3	0.5	1.5
7	DA-VP	ASENN-28X14	1	0.12	0.12
8	EA-VP	ASENN-44X16	1	0.12	0.12
9	RELAY	RIBU1C	2	1.104	2.208
10	RELAY BOARD	RIBU1C	1	1.87	1.87
11	RELAY	RH2B-UAC24V	5	1.4	7
12	RELAY	RIB24P	1	3.3	3.3
13	RH-O	VLV ACTUATOR	1	8	8
TOTAL VA REQUIRED FOR PANEL EN-5+ (20% SPARE)					**103**

NOTE:

IN CONSIDERATION OF THE RECEIPT OF THIS DOCUMENT, THE RECIPIENT AGREES NOT TO REPRODUCE, COPY, USE OR TRANSMIT THIS DOCUMENT AND/OR THE INFORMATION THEREIN CONTAINED, IN WHOLE OR IN PART, OR TO SUFFER SUCH ACTION BY OTHERS, FOR ANY PURPOSE, EXCEPT WITH THE ADVANCE WRITTEN PERMISSION OF JOHNSON CONTROLS, INC. AND FURTHER AGREES TO SURRENDER SAME TO JOHNSON CONTROLS, INC. UPON DEMAND.

COPYRIGHT JOHNSON CONTROLS, INC. 2018

Drawing Title: **Panel EN-5 Layout**

Rev. Num.	Rev.	Date	Rev. By	Rev. Description
1	1	08/21/2018	SH	Submittal

Project Title: **Iqualuit Waste Water Treatment Plant Upgrades**

Account Executive	Project Owner	System Designer	Drawn By	Drawing Date	Approved By	Approval Date
G. D. Montigny	Philippe Cernosek	CoEE	SH	08/21/2018		

Johnson Controls

Branch Information
Johnson Controls Ltd.
1375 Rue Frank-Carrel
Ville de Québec, QC G1N 2E7
Phone: 418-681-7958

Contract Number: **8N0Y-0079**

Drawing Number: **012.005**

H:\8N0Y0079\Drawings\Panel EN-5 Layout.vsd

				GRAPHIC VALIDATION				PANEL VALIDATION						CONTROLLER VALIDATION								DYNAMIC VALIDATION				
Point Type	System Name	Object Name	Expanded ID	VALIDATION	DATE	Controller Details	Trunk Addr.	Cable Destination Bay/Terminal	VALIDATION	DATE	Panel	Panel Location	Reference Drawing	Cable Number	Static verification Y/N	Date	Reading (Analog)	Calibration	Commands(Digital)	Reaction	Note	Dynamic verification Y/N	Date	Same as required	PID Stability	React as required with graphic	Note
	AHU-3					FEC 2611					EN-5	UPPER HEADWORKS, OFFICE	M601, M301														
	AHU-3					FEC 2611	17				EN-5	UPPER HEADWORKS, OFFICE	M601, M301														
UI IN-1	AHU-3	DA-T	Discharge Air Temp			FEC 2611	17	UI IN-1			EN-5	UPPER HEADWORKS, OFFICE	M601, M301	S-17-UI IN-1													
UI IN-2	AHU-3	RA-T	Return Air Temp			FEC 2611	17	UI IN-2			EN-5	UPPER HEADWORKS, OFFICE	M601, M301	S-17-UI IN-2													
UI IN-3	AHU-3	HRSA-T	Heat Recovery Supply Air Temperature			FEC 2611	17	UI IN-3			EN-5	UPPER HEADWORKS, OFFICE	M601, M301	S-17-UI IN-3													
UI IN-4	AHU-3	HREA-T	Heat Recovery Exhaust Air Temperature			FEC 2611	17	UI IN-4			EN-5	UPPER HEADWORKS, OFFICE	M601, M301	S-17-UI IN-4													
UI IN-5	AHU-3	DA-P	Discharge Air Static Pressure			FEC 2611	17	UI IN-5			EN-5	UPPER HEADWORKS, OFFICE	M601, M301	S-17-UI IN-5													
UI IN-6	AHU-3	OA-T	Outside Air Temp			FEC 2611	17	UI IN-6			EN-5	UPPER HEADWORKS, OFFICE	M601, M301	S-17-UI IN-6													
BI IN-7	AHU-3	LT-A	Low Temp Alarm			FEC 2611	17	BI IN-7			EN-5	UPPER HEADWORKS, OFFICE	M601, M301	S-17-BI IN-7													
BI IN-8	AHU-3	SF-S	Supply Fan Status			FEC 2611	17	BI IN-8			EN-5	UPPER HEADWORKS, OFFICE	M601, M301	S-17-BI IN-8													
BO OUT-1	AHU-3	GRD-C	OA Damper Command			FEC 2611	17	BO OUT-1			EN-5	UPPER HEADWORKS, OFFICE	M601, M301	S-17-BO OUT-1													
BO OUT-2	AHU-3	EAD-C	EA Damper Command			FEC 2611	17	BO OUT-2			EN-5	UPPER HEADWORKS, OFFICE	M601, M301	S-17-BO OUT-2													
BO OUT-3	AHU-3					FEC 2611	17	BO OUT-3			EN-5	UPPER HEADWORKS, OFFICE	M601, M301	S-17-BO OUT-3													
CO OUT-4	AHU-3	SF-HISPD	Supply Fan Hi Speed			FEC 2611	17	CO OUT-4			EN-5	UPPER HEADWORKS, OFFICE	M601, M301	S-17-CO OUT-4													
CO OUT-5	AHU-3	SF-LOSPD	Supply Fan Low Speed			FEC 2611	17	CO OUT-5			EN-5	UPPER HEADWORKS, OFFICE	M601, M301	S-17-CO OUT-5													
CO OUT-6	AHU-3					FEC 2611	17	CO OUT-6			EN-5	UPPER HEADWORKS, OFFICE	M601, M301	S-17-CO OUT-6													
CO OUT-7	AHU-3					FEC 2611	17	CO OUT-7			EN-5	UPPER HEADWORKS, OFFICE	M601, M301	S-17-CO OUT-7													
AO OUT-8	AHU-3	HROAFD-O	Heat Recovery OA Face Damper Output			FEC 2611	17	AO OUT-8			EN-5	UPPER HEADWORKS, OFFICE	M601, M301	S-17-AO OUT-8													
AO OUT-9	AHU-3	HROABD-O	Heat Recovery OA Bypass Damper Output			FEC 2611	17	AO OUT-9			EN-5	UPPER HEADWORKS, OFFICE	M601, M301	S-17-AO OUT-9													
	AHU-3					IOM 4711					EN-5	UPPER HEADWORKS, OFFICE	M601, M301														
	AHU-3					IOM 4711	4				EN-5	UPPER HEADWORKS, OFFICE	M601, M301														
UI IN-1	AHU-3	HEAD-P	Headwork Static Pressure			IOM 4711	4	UI IN-1			EN-5	UPPER HEADWORKS, OFFICE	M601, M301	17-5-4-UI IN-1													
UI IN-2	AHU-3	PFILT-DP	PreFilter Diff Pressure			IOM 4711	4	UI IN-2			EN-5	UPPER HEADWORKS, OFFICE	M601, M301	17-5-4-UI IN-2													
UI IN-3	AHU-3	RAFILT-DP	Return Filter Diff Pressure			IOM 4711	4	UI IN-3			EN-5	UPPER HEADWORKS, OFFICE	M601, M301	17-5-4-UI IN-3													
UI IN-4	AHU-3	DA-VP	Discharge Air Vel Press			IOM 4711	4	UI IN-4			EN-5	UPPER HEADWORKS, OFFICE	M601, M301	17-5-4-UI IN-4													
UI IN-5	AHU-3	EA-VP	Exhaust Air Vel Press			IOM 4711	4	UI IN-5			EN-5	UPPER HEADWORKS, OFFICE	M601, M301	17-5-4-UI IN-5													
UI IN-6	AHU-3					IOM 4711	4	UI IN-6			EN-5	UPPER HEADWORKS, OFFICE	M601, M301	17-5-4-UI IN-6													
BI IN-7	AHU-3	GASLEVEL-HI	Gas High Level			IOM 4711	4	BI IN-7			EN-5	UPPER HEADWORKS, OFFICE	M601, M301	17-5-4-BI IN-7													
BI IN-8	AHU-3	EF-S	Exhaust Fan Status			IOM 4711	4	BI IN-8			EN-5	UPPER HEADWORKS, OFFICE	M601, M301	17-5-4-BI IN-8													
BO OUT-1	AHU-3	EF-HISPD	Exhaust Fan Hi Speed			IOM 4711	4	BO OUT-1			EN-5	UPPER HEADWORKS, OFFICE	M601, M301	17-5-4-BO OUT-1													
BO OUT-2	AHU-3	EF-LOSPD	Exhaust Fan Low Speed			IOM 4711	4	BO OUT-2			EN-5	UPPER HEADWORKS, OFFICE	M601, M301	17-5-4-BO OUT-2													
BO OUT-3	AHU-3					IOM 4711	4	BO OUT-3			EN-5	UPPER HEADWORKS, OFFICE	M601, M301	17-5-4-BO OUT-3													
CO OUT-4	AHU-3					IOM 4711	4	CO OUT-4			EN-5	UPPER HEADWORKS, OFFICE	M601, M301	17-5-4-CO OUT-4													
CO OUT-5	AHU-3					IOM 4711	4	CO OUT-5			EN-5	UPPER HEADWORKS, OFFICE	M601, M301	17-5-4-CO OUT-5													
CO OUT-6	AHU-3					IOM 4711	4	CO OUT-6			EN-5	UPPER HEADWORKS, OFFICE	M601, M301	17-5-4-CO OUT-6													
CO OUT-7	AHU-3					IOM 4711	4	CO OUT-7			EN-5	UPPER HEADWORKS, OFFICE	M601, M301	17-5-4-CO OUT-7													
AO OUT-8	AHU-3	RH-O	Reheat Output			IOM 4711	4	AO OUT-8			EN-5	UPPER HEADWORKS, OFFICE	M601, M301	17-5-4-AO OUT-8													
AO OUT-9	AHU-3					IOM 4711	4	AO OUT-9			EN-5	UPPER HEADWORKS, OFFICE	M601, M301	17-5-4-AO OUT-9													

				GRAPHIC VALIDATION				PANEL VALIDATION						CONTROLLER VALIDATION								DYNAMIC VALIDATION					
Point Type	System Name	Object Name	Expanded ID	VALIDATION	DATE	Controller Details	Trunk Addr.	Cable Destination Bay/Terminal	VALIDATION	DATE	Panel	Panel Location	Reference Drawing	Cable Number	Static verification Y/N	Date	Reading (Analog)	Calibration	Commands(Digital)	Reaction	Note	Dynamic verification Y/N	Date	Same as requirest	PID Stability	React as required with graphic	Note
	AHU-3					IOM 3721					EN-5	UPPER HEADWORKS, OFFICE	M601, M301														
	AHU-3					IOM 3721	0				EN-5	UPPER HEADWORKS, OFFICE	M601, M301														
BI IN-1	AHU-3	OAD-S	OA Damper Status			IOM 3721	0	BI IN-1			EN-5	UPPER HEADWORKS, OFFICE	M601, M301	17-5-6-BI IN-1													
BI IN-2	AHU-3	EAD-S	EA Damper Status			IOM 3721	0	BI IN-2			EN-5	UPPER HEADWORKS, OFFICE	M601, M301	17-5-6-BI IN-2													
BI IN-3	AHU-3	FIRE-A	Fire Alarm			IOM 3721	0	BI IN-3			EN-5	UPPER HEADWORKS, OFFICE	M601, M301	17-5-6-BI IN-3													
BI IN-4	AHU-3	LIGHT-S	Ambient Light Status			IOM 3721	0	BI IN-4			EN-5	UPPER HEADWORKS, OFFICE	M601, M301	17-5-6-BI IN-4													
BI IN-5	AHU-3	SUMP2.1-S	Sump Pump 2.1 Status			IOM 3721	0	BI IN-5			EN-5	UPPER HEADWORKS, OFFICE	M601, M301	17-5-6-BI IN-5													
BI IN-6	AHU-3	SUMP2.2-S	Sump Pump 2.2 Status			IOM 3721	0	BI IN-6			EN-5	UPPER HEADWORKS, OFFICE	M601, M301	17-5-6-BI IN-6													
BI IN-7	AHU-3	SPHL2.1 & 2.2-A	Sump Pump 2.1 & 2.2 High Level Alarm			IOM 3721	0	BI IN-7			EN-5	UPPER HEADWORKS, OFFICE	M601, M301	17-5-6-BI IN-7													
BI IN-8	AHU-3	SUMP2.1-A	Sump Pump 2.1 Alarm			IOM 3721	0	BI IN-8			EN-5	UPPER HEADWORKS, OFFICE	M601, M301	17-5-6-BI IN-8													
BI IN-9	AHU-3	SUMP2.2-A	Sump Pump 2.2 Alarm			IOM 3721	0	BI IN-9			EN-5	UPPER HEADWORKS, OFFICE	M601, M301	17-5-6-BI IN-9													
BI IN-10	AHU-3					IOM 3721	0	BI IN-10			EN-5	UPPER HEADWORKS, OFFICE	M601, M301	17-5-6-BI IN-10													
BI IN-11	AHU-3					IOM 3721	0	BI IN-11			EN-5	UPPER HEADWORKS, OFFICE	M601, M301	17-5-6-BI IN-11													
BI IN-12	AHU-3					IOM 3721	0	BI IN-12			EN-5	UPPER HEADWORKS, OFFICE	M601, M301	17-5-6-BI IN-12													
BI IN-13	AHU-3					IOM 3721	0	BI IN-13			EN-5	UPPER HEADWORKS, OFFICE	M601, M301	17-5-6-BI IN-13													
BI IN-14	AHU-3					IOM 3721	0	BI IN-14			EN-5	UPPER HEADWORKS, OFFICE	M601, M301	17-5-6-BI IN-14													
BI IN-15	AHU-3					IOM 3721	0	BI IN-15			EN-5	UPPER HEADWORKS, OFFICE	M601, M301	17-5-6-BI IN-15													
BI IN-16	AHU-3					IOM 3721	0	BI IN-16			EN-5	UPPER HEADWORKS, OFFICE	M601, M301	17-5-6-BI IN-16													

SECTION 6
SHOP DRAWINGS

Network Automation Engine Catalog Page

MS-NAE35xx-x, MS-NAE45xx-x, MS-NAE55xx-x, MS-NAE551S-2, NAE8500-0

Code No. LIT-1900195
Software Release 9.0
Issued May 2018

Refer to the QuickLIT website for the most up-to-date version of this document.

Network Automation Engines (NAEs) provide comprehensive equipment monitoring and control, through key features such as scheduling, alarm and event management, energy management, data exchange, data trending, and data storage. These tools help reduce operation and energy costs for any type of building.

This line of NAEs features and leverages IP connectivity and web-based access to *Metasys*® Building Management Systems, including the BACnet® protocol, the LonWorks® network, and the N2 Bus protocol, to monitor and supervise a wide variety of HVAC, lighting, security, and fire safety equipment.

With the embedded Site Management Portal user interface, NAEs can support multiple concurrent web browser sessions with password and permission access control. To further enhance IT compatibility, NAEs employ standard IT security best practices.

NAEs have an embedded UI and the capability to connect to and communicate with cloud-based applications. NAEs support concurrently connected web browsers.

Encrypted and trusted communication is now implemented on NAEs that are upgraded to the new release. Private and secure communication is provided by Transport Layer Security (TLS 1.2), which is a protocol that eliminates all clear text communications between *Metasys* servers, devices, and the browser client. Greater protection from unauthorized users and computer hackers on the *Metasys* system network is now assured.

Specific features of NAE models include the following:

- NAE55 models support a comprehensive set of supervisory features and functions for large and technically advanced buildings and controllers.
- The NAE-S (MS-NAE551S-2) is a secure version of the standard NAE55 network engine that uses embedded encryption technology to protect and secure the building management system at the endpoint. At its initial release, the NAE-S is loaded with *Metasys* Release 8.0 firmware, but is field upgradeable to the latest release. The NAE-S is only available in North America and Canada. Refer to the *Secure Network Automation Engine Catalog Page (LIT-1900996)* for more information.
- NAE35/NAE45 models enable cost-effective NAE connectivity and control in smaller facilities and can increase distribution of control in larger facilities.
- The NAE85 is a software-only, high-capacity NAE that is designed to provide supervisory level control of *Metasys* networks that include a large number of BACnet IP devices.

Refer to the *Network Engines Product Bulletin (LIT-12012138)* for important product application information.

Figure 1: NAE55 Network Automation Engine



Repair Information

If the NAE fails to operate within its specifications, replace the unit. For a replacement NAE, contact the nearest Johnson Controls® representative.

Features and Benefits

- **Communication Using Commonly Accepted IT Standards, Including Web Services, at the Automation and Enterprise Level**—Allows you to install a system on your existing IT infrastructure within a building or enterprise and use standard IT communication services over the company intranet, WAN, or public Internet with VPN tunnel and firewall protection. Network engines also support the ability to optionally authenticate non-local users through a Remote Authentication Dial-in User Services (RADIUS) server and Syslog DDA for network logging of *Metasys* audits and events. Hypertext Transfer Protocol Secure (https) is employed to provide encrypted communication between the NAE and its clients.
- **Secure Web-Based User Interface**—Allows you to access system data in the NAEs from any supported web browser device connected to the network, including remote users connected by dial-up telephone or an Internet service provider (ISP). All network engines upgraded to Release 8.1 firmware have self-signed certificates that provide for encrypted communication. Optionally, you can deploy trusted certificates to network engines. The customer's IT department or Certificate Authority (CA) can provide trusted certificates.
- **Site Director Function**—Allows you to access all data on one site through one device. The device designated as the Site Director coordinates the display of data from multiple NAE devices for easy navigation through the entire site. This capability is only available on some network engine models.
- **Embedded Site Management Portal System Configuration Software**—Gives you access to system configuration, monitoring, commanding, diagnosis, and a cloud-based application from any device with web browser software without the need for separate workstation software.
- **Embedded User Interface and Online System Configuration Software**—Lets you enable, configure, commission, archive data, monitor, command, and perform system diagnosis from any device by using a web browser, without the need for separate workstation software.

- **Supervision of Field Controller Networks Including BACnet MS/TP, N2 Bus LonWorks Network, and BACnet IP Devices**—Supports connectivity to open network standards for complete flexibility in the selection of field devices. Supported protocols include BACnet® MS/TP, BACnet IP, LonWorks, and N2 Bus.
- **Multiple Connection Options for Data Access**—Allow connection of a web browser through the IP network using the Ethernet port. For a dial-up connection, use the optional internal or external modem.
- **Building Management Security with the NAE-S**—Uses embedded encryption technology with a built-in firewall and can function as a secure network engine reporting to an Application and Data Server (ADS) Site Director. Or, the NAE-S can serve as a BACnet® Building Controller (B-BC) network engine that can communicate with a BACnet Operator Workstation (B-OWS) or BACnet Advanced Operator Workstation (B-AWS). The NAE-S is Common Criteria Certified and meets the Federal Information Processing Standard (FIPS)-140-2, Level 2.

Ordering Information

Contact the nearest Johnson Controls representative to order an NAE. The following tables list the product code numbers for all available network engines based on model. For network engine accessories, see *Table 9*.

Table 1: NAE35 Ordering Information

Product Code Number [1]	Description
MS-NAE35xx-x (Base Features of Each NAE35)	NAE35 Network Automation Engines: Requires a 24 VAC power supply. Each model includes one RS-232-C serial port, one USB serial port, one Ethernet port, and an MS-BAT1020-0 Data Protection Battery. Supports a BACnet IP network.
MS-NAE3510-2	Supports one N2 Bus or BACnet MS/TP (RS-485) trunk; includes an additional RS-232-C serial port for optional external modem; supports a maximum of 50 devices on the N2 Bus or BACnet MS/TP trunk.
MS-NAE3511-2	Supports one N2 Bus or BACnet MS/TP (RS-485) trunk; includes an internal modem; supports a maximum of 50 devices on the N2 Bus or BACnet MS/TP trunk.
MS-NAE3514-2	Supports one N2 Bus or BACnet MS/TP (RS-485) trunk; limited to Basic Access support; includes an additional RS-232-C serial port for optional external modem; supports a maximum of 50 devices on the N2 Bus or BACnet MS/TP trunk.
MS-NAE3515-2	Supports one N2 Bus or BACnet MS/TP (RS-485) trunk; limited to Basic Access support; includes an internal modem; supports a maximum of 50 devices on the N2 Bus or BACnet MS/TP trunk.
MS-NAE3520-2	Supports one LonWorks trunk; includes an additional RS-232-C serial port for optional external modem. Supports a maximum of 64 devices on the LonWorks port.
MS-NAE3521-2	Supports one LonWorks trunk; includes an internal modem. Supports a maximum of 64 devices on the LonWorks port.
MS-NAE3524-2	Supports one LonWorks trunk; limited to Basic Access support; and includes an additional RS-232-C serial port for optional external modem. Supports a maximum of 64 devices on the LonWorks trunks.
MS-NAE3525-2	Supports one LonWorks trunk; limited to Basic Access support; and includes an internal modem. Supports a maximum of 64 devices on the LonWorks trunks.

1 Some models are also available in Buy American version (add G after the code number). For repair parts, add -702 after the code number (for example, MS-NAE3525-702).

Table 2: NAE45 Ordering Information

Product Code Number[1]	Description
MS-NAE45xx-x (Base Features of Each NAE45)	NAE45 Network Automation Engines: Requires a 24 VAC power supply. Each model includes one RS-232-C serial port, one USB serial port, one Ethernet port, and an MS-BAT1020-0 Data Protection Battery. Supports a BACnet IP network.
MS-NAE4510-2	Supports one N2 Bus or BACnet MS/TP (RS-485) trunk; includes an additional RS-232-C serial port for optional external modem; supports a maximum of 100 devices on the N2 Bus or BACnet MS/TP trunk.
MS-NAE4511-2	Supports one N2 Bus or BACnet MS/TP (RS-485) trunk; includes an internal modem; supports a maximum of 100 devices on the N2 Bus or BACnet MS/TP trunk.
MS-NAE4520-2	Supports one LonWorks trunk, includes an additional RS-232-C serial port for optional external modem; supports a maximum of 127 devices on the LonWorks trunk.
MS-NAE4521-2	Supports one LonWorks trunk, includes an internal modem; supports a maximum of 127 devices on the LonWorks trunk.

1 Some models are also available in Buy American version (add G after the code number). For repair parts, add -702 after the code number (for example, MS-NAE4521-702).

Table 3: NAE55-2 Ordering Information

Product Code Number	Description
MS-NAE55xx-x (Base Features of Each NAE55)	NAE55 Network Automation Engines: Requires a 24 VAC power supply. Each model includes two RS-232-C serial ports, two USB serial ports, two RS-485 ports, one Ethernet port, and one MS-BAT1010-0 Data Protection Battery. Supports a BACnet IP network.
MS-NAE5510-2U	Supports two N2 Bus or two BACnet MS/TP (RS-485) trunks (or one N2 Bus trunk and one BACnet MS/TP trunk); supports a maximum of 100 devices on each N2 Bus or BACnet MS/TP trunk. **Note:** This model is UL 864 **10th Edition** UUKL/ORD-C100-13 UUKLC Standard for Smoke Control Equipment for Release 8.1 only. Refer to the *Metasys® System UL 864 10th Edition UUKL/ORD-C100-13 UUKLC Smoke Control System Technical Bulletin (LIT-12012487)* for detailed specifications, requirements, and procedures for installing and operating UUKL 864 Listed *Metasys* system devices. For example, in order to be UL/cUL compliant, this model must be pre-installed and pre-wired in a standard or custom panel built at the Johnson Controls Reynosa factory.
MS-NAE5510-2UW	Supports two N2 Bus or two BACnet MS/TP (RS-485) trunks (or one N2 Bus trunk and one BACnet MS/TP trunk); supports a maximum of 100 devices on each N2 Bus or BACnet MS/TP trunk. **Note:** This model is UL 864 **9th Edition** UUKL/ORD-C100-13 UUKLC Standard for Smoke Control Equipment for Release 5.2 only, offered as a replacement controller for the original MS-NAE5510-2U model as prescribed by *Product Update Notice (PU) 17-03*. Refer to the *Metasys® System UL 864 9th Edition UUKL/ORD-C100-13 UUKLC Smoke Control System Technical Bulletin (LIT-12011252)* for detailed specifications, requirements, and procedures for installing and operating UUKL 864 Listed *Metasys* system devices.

Table 4: NAE55-3[1] Ordering Information

Product Code Number[2]	Description
MS-NAE55xx-x (Base Features of Each NAE55)	NAE55 Network Automation Engines: Requires a 24 VAC power supply. Each model includes two RS-232-C serial ports, two USB serial ports, two RS-485 ports, one Ethernet port, and one MS-BAT1010-0 Data Protection Battery. Supports up to 100 devices on each N2 or BACnet MS/TP trunk. Supports a BACnet IP network.
MS-NAE5510-3	Supports two N2 or two BACnet MS/TP (RS-485) trunks (or one N2 trunk and one BACnet MS/TP trunk).
MS-NAE5510-3U	Supports two N2 Bus or two BACnet MS/TP (RS-485) trunks (or one N2 Bus trunk and one BACnet MS/TP trunk). **Note:** This model is UL 864 **10th Edition** UUKL/ORD-C100-13 UUKLC Standard for Smoke Control Equipment for Release 8.1 only. Refer to the *Metasys® System UL 864 10th Edition UUKL/ORD-C100-13 UUKLC Smoke Control System Technical Bulletin (LIT-12012487)* for detailed specifications, requirements, and procedures for installing and operating UUKL 864 Listed *Metasys* system devices. For example, in order to be UL/cUL compliant, this model must be pre-installed and pre-wired in a standard or custom panel built at the Johnson Controls Reynosa factory.
MS-NAE5511-3	Supports two N2 or two BACnet MS/TP (RS-485) trunks (or one N2 trunk and one BACnet MS/TP trunk); includes an internal modem.
MS-NAE5520-3	Supports a LonWorks trunk and two N2 trunks or two BACnet MS/TP (RS-485) trunks (or one N2 trunk and one BACnet MS/TP trunk). Supports up to 255 devices on the LonWorks trunk.
MS-NAE5521-3	Supports a LonWorks trunk, and two N2 trunks or two BACnet MS/TP (RS-485) trunks (or one N2 trunk and one BACnet MS/TP trunk); includes an internal modem. Supports up to 255 devices on the LonWorks trunk.

1 This model is only supported for *Metasys* 7.0.7 or later.
2 Some models are also available in Buy American version (add G after the code number). For the European versions of the NAE55, add an E after the code number. For repair parts, add -703 after the code number (for example, MS-NAE5521-703).

Table 5: NAE-S Ordering Information

Product Code Number	Description
MS-NAE551S-2	Secure NAE-S Network Automation Engine with 4 Gb flash memory and 1 Gb SDRAM. Requires a 24 VAC power supply. This model is the secure version of the standard NAE55 network engine that uses embedded encryption technology and includes an Ethernet port, one MS-BAT1010-0 Data Protection Battery, power supply, power cable, and a reset tool. Supports up to 100 devices on each N2 or BACnet MS/TP trunk.
MS-NAE551S-702	Replacement NAE-S network engine (MS-NAE551S-2 model).
MS-BAT1010-0	Replacement data protection battery for secure NAE-S. Rechargeable gel cell battery with a typical life of 3 to 5 years at 70°F (21°C).
DRP-24V48W1AZ (rev04)	DeltaPSU 24 VDC power supply provided for powering the crypto module in the secure NAE-S. Includes power cable.
MS-NAESCBL-0	Configuration cable and non-metallic reset probe.

Table 6: NAE-S Control Panel Ordering Information

Product Code Number	Description
MS-NAE5510-ER2 **(United States and Canada)**	**Enclosure:** 24 in. W x 24 in. H x 6.6 in. D (609 mm W x 609 mm H x 167 mm D) **Controllers:** MS-NAE551S-2 and MS-FEC1611-1 **Power Supplies:** PAN-PWRSP-0 and DRP-24V48W1AZ (Rev04).

Table 7: NXE5xx-x Series Windows Embedded Standard 2009 Image Files

Product Code Number	Description
MS-NXE5-1WES-10	10 Licenses—operating system upgrade from Windows XP Embedded to Windows Embedded Standard 2009
MS-NXE5-1WES-25	25 Licenses—operating system upgrade from Windows XP Embedded to Windows Embedded Standard 2009
MS-NXE5-1WES-50	50 Licenses—operating system upgrade from Windows XP Embedded to Windows Embedded Standard 2009
MS-NXE5-1SWO-6	Software Only (no licenses)—upgrade software for previously purchased software and license part numbers MS-NSE5-1WES-xx

Note: These product codes apply to NxE55-1 engines only. They provide a paid license upgrade from the Windows XP® embedded operating system to the WES2009 embedded operating system.

Table 8: NAE85 Ordering Information

Product Code Number	Description
MS-NXE85SW-0[1]	NAE85 or NIE85 (mode is selectable during initial configuration). For new installations/projects.
MS-NXE85SW-6[1]	NAE85 or NIE85 (mode is selectable during the initial configuration). For upgrading existing installations/projects.

1 Standard NxE85 models support up to 10,000 objects; an expansion upgrade is available to support an additional 15,000 objects. The NAE85 will display as unlicensed if the object count goes above 25,000. See the NAE Accessories Ordering Information table for more information.

Table 9: NAE Accessories Ordering Information

Product Code Number	Description
MS-BAT1010-0	Replacement data protection battery for NAE55 and NIE55. Rechargeable gel cell battery: 12 V, 1.2 Ah, with a typical life of 3 to 5 years at 21°C (70°F)
MS-BAT1020-0	Replacement data protection battery for NAE35, NAE45, and NCE25. Rechargeable NiMH battery: 3.6 V 500 mAh, with a typical life of 5 to 7 years at 21°C (70°F)
MS-15KUPG-0	15,000 object expansion upgrade for NxE85 (only one expansion per NxE85)
MS-MULTENGSW-6	Contains ToggleTunnel utility for converting an NAE55/NIE55 to an NAE55 model with the N2 Tunneling features enabled. Not for use with MS-NAE5510-1U or MS-NAE5510-2U.
MS-EXPORT-0	Export Utility extracts historical trend, alarm, and audit data from the system and presents the historical data in a variety of formats. **Note:** This option is not necessary for sites that have an ADS/ADX that is the Site Director because Export Utility is provided with the ADS/ADX solution.
AS-XFR100-1	Power transformer (Class 2, 24 VAC, 92 VA maximum output), with enclosure
AS-XFR010-1	Power transformer (Class 2, 24 VAC, 92 VA maximum output), no enclosure
SC450RM1U (OEM Part No.)	Recommended UPS for NxE85 model: APC® Smart-UPS SC 450 VA, 280 W, 120 VAC input/output with NEMA 5-15R output connections

Technical Specifications

Table 10: NAE35 and NAE45

Power Requirement	Dedicated nominal 24 VAC, Class 2 power supply (North America), safety extra-low voltage (SELV) power supply (Europe), at 50/60 Hz (20 VAC minimum to 30 VAC maximum)
Power Consumption	25 VA maximum
Ambient Operating Conditions	0 to 50°C (32 to 122°F); 10 to 90% RH, 30°C (86°F) maximum dew point
Ambient Storage Conditions	-40 to 70°C (-40 to 158°F); 5 to 95% RH, 30°C (86°F) maximum dew point
Data Protection Battery	Supports data protection on power failure. Rechargeable NiMH battery: 3.6 VDC 500 mAh, with a typical life of 5 to 7 years at 21°C (70°F); Product Code Number: MS-BAT1020-0
Processor	192 MHz Renesas® SH4 7760 RISC processor
Memory	128 MB flash nonvolatile memory for operating system, configuration data, and operations data storage and backup 128 MB synchronous dynamic random access memory (SDRAM) for operations data dynamic memory
Operating System	Microsoft® Windows® Embedded CE 6.0

Table 10: NAE35 and NAE45

Network and Serial Interfaces	One Ethernet port; connects at 10 or 100 Mbps; 8-pin RJ-45 connector One optically isolated RS-485 port; 9.6k, 19.2k, 38.4k, or 76.8k baud (depending on protocol); with a pluggable and keyed 4-position terminal block (FC Bus available on NAE351x and NAE451x models only) One LonWorks port; FTT10 78 Kbps; pluggable, keyed 3-position terminal block (LonWorks port available on NAE352x-x and NAE452x models only). One RS-232-C serial port with standard 9-pin sub-D connector that supports standard baud rates. A second serial port, on models without an internal modem, that supports an optional, user-supplied external modem. One USB serial port with standard USB connector that supports an optional, user-supplied external modem. Option: One telephone port for internal modem; up to 56 Kbps; 6-pin modular connector (NAE models with an optional internal modem have one RS-232-C serial port only.)
Housing	Plastic housing material: ABS polycarbonate UL94-5VB Protection: IP20 (IEC 60529)
Mounting	On flat surface with screws on three mounting clips or a single 35 mm DIN rail
Dimensions (Height x Width x Depth)	131 x 270 x 62 mm (5-3/16 x 10-5/8 x 2-1/2 in.) Minimum space for mounting NAE35 and NAE45: 210 x 350 x 110 mm (8-3/16 x 13-13/16 x 4.-5/16 in.)
Shipping Weight	1.2 kg (2.7 lb)
Compliance CE	**United States:** UL Listed, File E107041, CCN PAZX, UL 916, Energy Management Equipment; FCC Compliant to CFR47, Part 15, Subpart B, Class A
	Canada: UL Listed, File E107041, CCN PAZX7, CAN/CSA C22.2 No. 205, Signal Equipment; Industry Canada Compliant, ICES-003
	Australia and New Zealand: RCM Mark, Australia/NZ Emissions Compliant
	Europe: CE Mark – Johnson Controls declares that this product is in compliance with the essential requirements and other relevant provisions of the EMC Directive.
	BACnet International: BACnet Testing Laboratories™ (BTL) 135-2010 Listed BACnet Building Controller (B-BC)

The MS-NAE5510-2U and MS-NAE5510-3U network engines with Release 8.1 software comply with UL 864 10th Edition UUKL/ORD-C100-13 UUKLC Smoke Control Listing for United States and Canada. Refer to the *Metasys® System UL 864 10th Edition UUKL/ORD-C100-13 UUKLC Smoke Control System Technical Bulletin (LIT-12012487)* for specific UL 864 UUKL listing guidelines that must be followed per UL 864.

Table 11: MS-NAE5510-2U

Power Requirement	Dedicated nominal 24 VAC, Class 2 power supply (North America) at 50/60 Hz (20 VAC minimum to 30 VAC maximum)
Power Consumption	50 VA maximum
Ambient Operating Conditions	0 to 50°C (32 to 122°F); 10 to 90% RH, 30°C (86°F) maximum dew point
Ambient Storage Conditions	-40 to 70°C (-40 to 158°F); 5 to 95% RH, 30°C (86°F) maximum dew point
Data Protection Battery	Supports data protection on power failure. Rechargeable gel cell battery: 12 V, 1.2 Ah, with a typical life of 3 to 5 years at 21°C (70°F); Product Code Number: MS-BAT1010-0
Clock Battery	Maintains real-time clock through a power failure. Onboard cell; typical life 10 years at 21°C (70°F)
Processor	1.6 GHz Intel® Atom™ processor
Memory	4 GB flash nonvolatile memory for operating system, configuration data, and operations data storage and backup. 1 GB SDRAM for operations data dynamic memory for all models
Operating System	Johnson Controls OEM Version of Microsoft Windows Standard 2009
Network and Serial Interfaces	One Ethernet port; 10/100/1,000 Mbps; 8-pin RJ-45 connector Two optically isolated RS-485 ports; 9,600, 19.2k, 38.4k, or 76.8k baud; pluggable and keyed 4-position terminal blocks Two RS-232-C serial ports, with standard 9-pin sub-D connectors, that support all standard baud rates Two USB serial ports; standard USB connectors (use is not supported on Smoke Control NAEs)
Housing	Plastic housing with internal metal shield Plastic material: ABS + polycarbonate
Mounting	On flat surface with screws on four mounting feet or on dual 35 mm DIN rail
Dimensions(Height x Width x Depth)	226 x 332 x 96.5 mm (8.9 x 13.1 x 3.8 in.) including mounting feet Minimum space for mounting: 303 x 408 x 148 mm (12.0 x 16.1 x 5.8 in.)
Shipping Weight	2.9 kg (6.4 lb)

Table 11: MS-NAE5510-2U

Compliance	**United States**: UL Listed, File E107041, CCN PAZX, UL 916, Energy Management Equipment; FCC Compliant to CFR47, Part 15, Subpart B, Class A
	UL Listed, File S4977, UL 864 UUKL/UUKLC 10th Edition Listed, Smoke Control Units and Accessories for Fire Alarm Systems Equipment
CE	**Canada**: UL Listed, File E107041, CCN PAZX7, CAN/CSA C22.2 No. 205, Signal Equipment, Industry Canada Compliant, ICES-003
	UL Listed, File S4977, UL 864 UUKL/ORD-C100-13 10th Edition Listed, Smoke Control Units and Accessories for Fire Alarm Systems
	Europe: CE Mark - Johnson Controls, Inc. declares that this product is in compliance with the essential requirements and other relevant provisions of the EMC Directive.
	Australia and New Zealand: RCM Mark, Australia/NZ Emissions Compliant
	BACnet International: BACnet Testing Laboratories™ (BTL) 35-2004 Listed BACnet Building Controller (B-BC)

Table 12: NAE55xx-3 and NIE55xx-3

Power Requirement	Dedicated nominal 24 VAC, Class 2 power supply (North America), SELV power supply (Europe), at 50/60 Hz (20 VAC minimum to 30 VAC maximum)
Power Consumption	50 VA maximum
Ambient Operating Conditions	0 to 50°C (32 to 122°F); 10 to 90% RH, 30°C (86°F) maximum dew point
Ambient Storage Conditions	-40 to 70°C (-40 to 158°F); 5 to 95% RH, 30°C (86°F) maximum dew point
Data Protection Battery	Supports data protection on power failure. Rechargeable gel cell battery: 12 V, 1.2 Ah, with a typical life of 3 to 5 years at 21°C (70°F); Product Code Number: MS-BAT1010-0
Clock Battery	Maintains real-time clock through a power failure. Onboard cell; typical life 10 years at 21°C (70°F)
Processor	1.46 GHz Intel® Atom® Bay Trail E3815 processor for MS-NAE55xx-3 models
Memory	16 GB flash nonvolatile memory for operating system, configuration data, and operations data storage and backup for MS-NAE55xx-3 models.
	2 GB DDR3 SDRAM for operations data dynamic memory for all models
Operating System	Johnson Controls OEM Version of Microsoft Windows Embedded Standard 7 with SP1 (WES7)
Network and Serial Interfaces	One Ethernet port; 10/100/1,000 Mbps; 8-pin RJ-45 connector
	Two optically isolated RS-485 ports; 9,600, 19.2k, 38.4k, or 76.8k baud; pluggable and keyed 4 position terminal blocks (RS-485 terminal blocks available on NAE55 models only)
	Two RS-232-C serial ports, with standard 9-pin sub-D connectors, that support all standard baud rates
	Two USB 2.0 serial ports; standard USB connectors support an optional, user-supplied external modem
	Options: One telephone port for internal modem; up to 56 kbps; 6-pin RJ-12 connector
	One LonWorks port; FTT10 78 Kbps; pluggable, keyed 3-position terminal block (LonWorks port available on NAE552x-x models only)
Housing	Plastic housing with internal metal shield
	Plastic material: ABS + polycarbonate; Protection: IP20 (IEC 60529)
Mounting	On flat surface with screws on four mounting feet or on dual 35 mm DIN rail
Dimensions (Height x Width x Depth)	226 x 332 x 96.5 mm (8.9 x 13.1 x 3.8 in.) including mounting feet
	Minimum space for mounting: 303 x 408 x 148 mm (12.0 x 16.1 x 5.8 in.)
Shipping Weight	2.9 kg (6.4 lb)
Compliance	**United States**: UL Listed, File E107041, CCN PAZX, UL 916, Energy Management Equipment, FCC Compliant to CFR47, Part 15, Subpart B, Class A
	UL Listed, File S4977, UL 864 UUKL/UUKLC 10th Edition Listed, Smoke Control Units and Accessories for Fire Alarm Systems Equipment (MS-NAE5510-3U model only with Release 8.1 software)
CE	**Canada**: UL Listed, File E107041, CCN PAZX7, CAN/CSA C22.2 No. 205, Signal Equipment, Industry Canada Compliant, ICES-003
	UL Listed, File S4977, UL 864 UUKL/ORD-C100-13 10th Edition Listed, Smoke Control Units and Accessories for Fire Alarm Systems (MS-NAE5510-3U model only with Release 8.1 software)
	Europe: CE Mark - Johnson Controls declares that this product is in compliance with the essential requirements and other relevant provisions of the EMC Directive.
	Australia and New Zealand: RCM Mark, Australia/NZ Emissions Compliant
	BACnet International: BACnet Testing Laboratories™ (BTL) 135-2010 Listed BACnet Building Controller (B-BC)

Table 13: NAE-S Technical Specifications (North America and Canada Only)

Power Requirements	**NAE551S-2 Engine:** Dedicated nominal 24 VAC, Class 2 power supply (North America), at 50/60 Hz (20 VAC minimum to 30 VAC maximum) **Internal Module with Embedded Encryption Technology:** Input: Dedicated nominal 100–240 VAC, Class 1 power supply (North America), at 50/60 Hz (85 VAC minimum to 264 VAC maximum) Output: 24 VDC (22 VDC minimum to 26 VDC maximum)
Power Consumption	50 VA maximum
Power Specifications for Encryption Board	Dedicated nominal 24 VDC, input voltage range 85–264 VAC (120–375 VDC), output current 2.0A
Ambient Operating Conditions	32 to 122°F (0 to 50°C); 10 to 90% RH, 86°F (30°C) maximum dew point
Ambient Storage Conditions	-40 to 158°F (-40 to 70°C); 5 to 95% RH, 86°F (30°C) maximum dew point
Data Protection Battery	Supports data protection on power failure. Rechargeable gel cell battery: 12 V, 1.2 Ah, with a typical life of 3 to 5 years at 70°F (21°C); Product Code Number: MS-BAT1010-0
Clock Battery	Maintains real-time clock through a power failure. Onboard cell; typical life 10 years at 70°F (21°C)
Processor	1.6 GHz Intel Atom® processor
Memory	4 GB flash nonvolatile memory for operating system, configuration data, and operations data storage and backu 1 GB SDRAM for operations data dynamic memory for all models
Network and Serial Interfaces	One Ethernet port; 10/100/1000 Mbps; 8-pin RJ-45 connector Two optically isolated RS-485 ports; 9600, 19.2k, 38.4k, or 76.8k baud; pluggable and keyed 4 position terminal blocks (RS-485 terminal blocks available)
Housing	Plastic housing with internal metal shield Plastic material: ABS + polycarbonate; Protection: IP20 (IEC 60529)
Mounting	Must be mounted in a locked, secure panel using four mounting feet or dual 35 mm DIN rails.
Dimensions (Height x Width x Depth)	8.9 x 13.1 x 3.8 in. (226 x 332 x 96.5 mm) including mounting feet Minimum space for mounting: 12.0 x 16.1 x 5.8 in. (303 x 408 x 148 mm)
Shipping Weight	10.4 lb (3.88 kg)
Shipping Restriction	The Bureau of Industry and Security of the U.S. Department of Commerce has regulated this shipment under 740.17(b)(2) of the EAR and restricted the shipment of this product to the following countries: Cuba, Iran, North Korea, Sudan, and Syria.
Compliance	**United States**: UL 508A and CCN NITW Industrial Control Panel Listed, FCC Compliant to CFR47, Part 15, Subpart B, Class A
	Canada: cUL CSA-C22.2 No. 14, CCN NITW7, Industrial Control Equipment; IC Compliant to ICES-003 Class A
	BACnet International: BACnet Testing Laboratories™ (BTL) 135-2010 Listed BACnet Building Controller (B-BC)

Table 14: NAE85 Software System Recommendations for Installation/Upgrade

Recommended Computer Platform	Intel Xeon® E5506, 2.13 GHz, 4 MB Cache 2 x 160 GB 7.2K , 8.9 cm (3.5 in.) Cabled 3 Gbps, RAID 1 configuration with add-in SAS6/iR (SATA/SAS Controller)
Recommended Memory	2 GB RAM minimum
Hard Disk	160 GB minimum
Supported Operating Systems and Software	Windows® Server® 2016 (64-bit) Windows® Server® 2012 R2 with Update 1 (64-bit) Windows® Server® 2012 (64-bit) **Note:** The NAE85 software requires two Windows components: Microsoft .NET Framework Version 3.5 SP1 and Microsoft .NET Framework Version 4.6.1.

Table 14: NAE85 Software System Recommendations for Installation/Upgrade

Supported Operating Systems for *Metasys* Client Computers	Windows® 10 Pro and Enterprise Editions with Anniversary Update (version 1607) (64-bit) Windows® 8.1 Pro and Enterprise Editions with Update 1 (64-bit) Windows® 7 Professional, Enterprise, and Ultimate Editions with SP1 (64-bit) Windows® 7 Professional, Enterprise, and Ultimate Editions with SP1 (32-bit) Apple® macOS® 10.12 Sierra Apple® OS X® 10.11 El Capitan **Notes:** • Apple® operating systems are supported for *Metasys* client computers only. • In Apple® OS X®, you cannot view Graphics+ graphics in the Site Management Portal UI.
Internal Optical Drive	DVD ROM, SATA
Recommended Antivirus Software	Symantec Endpoint Protection version 12
Supported Web Browser Software for *Metasys* Client Computers	Windows® Internet Explorer® 11.0.9600.18449 Update version 11.0.35 or later **Note:** In Internet Explorer 11, select the Use Microsoft compatibility lists option, found under **Tools > Compatibility View Settings**, to ensure that websites appear and function correctly. Google® Chrome™ version 54 or later Apple® Safari® 10 or later (Other browsers, such as Mozilla® Firefox®, may also be used but are not fully supported.) **Note:** You use the web browser to download the Launcher application. After you install the Launcher application, you use the Launcher, not the web browser, to log in to *Metasys* Site Management Portal (SMP) UI.
Supported Virtual Environments	Microsoft Hyper-V™, VMware®
Network Communication	Network Interface: 1 Gbps Ethernet network interface card connects at 10 Mbps, 100 Mbps, or 1 Gbps (100 Mbps or better recommended)
Recommended Data Protection	UPS for NxE85 model: APC Smart-UPS SC 450VA, 280 W, 120 VAC input/output, National Electrical Manufacturers' Association (NEMA) 5-15R output connections, OEM Part No. SC450RM1U

The performance specifications are nominal and conform to acceptable industry standard. For application at conditions beyond these specifications, consult the local Johnson Controls office. Johnson Controls shall not be liable for damages resulting from misapplication or misuse of its products.

Building Technologies & Solutions
507 E. Michigan Street, Milwaukee, WI 53202

Metasys® and Johnson Controls® are registered trademarks of Johnson Controls.
All other marks herein are the marks of their respective owners.© 2018 Johnson Controls

Published in U.S.A.
www.johnsoncontrols.com

Field Equipment Controller (FEC) Series Catalog Page

Code No. LIT-1900346
Issued June 2018

Refer to the QuickLIT website for the most up-to-date version of this document.

The Field Equipment Controller (FEC) Series products are programmable controllers that can be switched between BACnet® MS/TP and N2 communications protocols. When they are used as BACnet MS/TP devices, they are BACnet Application Specific Controllers (B-ASCs) with integral MS/TP communications. In N2 mode, they can be used to modernize sites with legacy Johnson Controls® controllers.

FECs feature 32-bit microprocessor architecture, patented continuous tuning adaptive control, and peer-to-peer communications, and are available with an optional built-in LCD screen local UI.

A full range of FEC models combined with the Input/Output Module (IOM) models can be applied to a wide variety of building applications ranging from simple fan coil or heat pump control to advanced central plant management. All FEC Series Controllers configured for BACnet support wireless communications using the ZFR System accessories.

Important:	You cannot purchase a similar third-party device and install it in a UL/cUL Listed smoke control system. Doing so voids the UL/cUL Smoke Control Listing. Third-party devices must be provided and labeled by the factory as described in the UL/cUL Smoke Control Listing.

Important:	Only those Johnson Controls products identified for use in smoke control applications have been tested and listed by UL for use in a *Metasys* system UL/cUL 864 10th Edition UUKL/ORD-C100-13 UUKLC Smoke Control System. Installation of a product that is not UL/cUL Listed and labeled for this application prevents the entire system from being UL/cUL Listed for smoke control.

Refer to the *Metasys® System Field Equipment Controllers and Related Products Product Bulletin (LIT-12011042)* for product application details.

If the product fails to operate within its specifications, replace the product. For a replacement product, contact the nearest Johnson Controls® representative.

Features

- **Switchable Communications Protocols**—Provides flexibility with a choice between BACnet MS/TP and N2 communication
- **Standard BACnet® Protocol**—Provides interoperability with other Building Automation System (BAS) products that use the widely accepted BACnet standard.
- **Standard Hardware and Software Platform**—Uses a common hardware design throughout the family line to support standardized wiring practices and installation workflows. Also uses a common software design to support use of a single tool for control applications, commissioning, and troubleshooting to minimize technical training.
- **ZFR Wireless Field Controller (FC) or Sensor/Actuator (SA) Bus Interface**—Provides a wireless alternative to hard-wired *Metasys*® system counterparts with either the ZFR1800 Series Wireless Bus or the WNC1800/ZFR182x Pro Series Wireless Field Bus (ZFR Pro), offering application flexibility and mobility with minimal disruption to building occupants.

Figure 1: Field Equipment Controllers



- **Bluetooth® Wireless Commissioning**—Provides an easy-to-use connection to the configuration and commissioning tool.
- **Auto-Tuned Control Loops**—Reduce commissioning time, eliminate change-of-season re-commissioning, and reduce wear and tear on mechanical devices.
- **Universal Inputs, Configurable Outputs, and Point Expansion Modules**—Allows multiple signal options to provide input/output flexibility.
- **Optional Local User Interface Display** —Allows convenient monitoring and adjusting capabilities at the local device.
- **BACnet® Testing Laboratories (BTL) Listed**—Ensures interoperability with other BTL-listed devices. BTL is a third-party agency, which validates that BAS vendor products meet the BACnet industry-standard protocol.
- **32-bit Microprocessor**—Ensures optimum performance and meets industry specifications.
- **BACnet Automatic Discovery**—Supports easy controller integration into a *Metasys* BAS.
- **End-of-Line (EOL) Switch in MS/TP Field Controllers** — Enables field controllers to be terminating devices on the communications bus.
- **Pluggable Communications Bus and Supply Power Terminal Blocks**—Expedites installation and troubleshooting.
- **Patented proportional adaptive control (P-Adaptive) and Pattern Recognition Adaptive Control (PRAC) technologies**—Provide continuous loop tuning.
- **Wireless Connectivity through the ZFR1800 Series or the WNC1800/ZFR182x Pro Series Wireless Field Bus Systems in MS/TP Controllers**—Enables wireless mesh connectivity to supervisory controllers, facilitating easy initial location and relocation.
- **Writable Flash Memory**—Allows standard or customized applications to be downloaded from the Controller Configuration Tool (CCT) and enables persistent application data.
- **Large Product Family**—Provides a wide range of point mix to meet application requirements and allows for the addition of one or more Input/Output Module (IOM) and Network Sensors to provide even more I/O capacity.
- **User-Friendly Graphic Theme and Clear Pushbutton Identification**—Facilitate easy navigation of the integral or optional UI/display.

Table 1: FEC Series Model Information (Including Point Type Counts)

		FEC2511[1]	FEC16	FEC26
Communication Protocol		BACnet MS/TP, N2		
Engines		All Model types. Some NIE models support MS/TP and N2 devices. Refer to the *Network Engines Product Bulletin (LIT-12012138)* for details.		
Modular Jacks		6-pin SA Bus Modular Port supports one communicating sensor. **Or** you can wire up to four communicating sensors to the SA Bus Terminal Block. They cannot be used at the same time.		
			6-pin FC Bus for tool support	
Point Types	**Signals Accepted**			
Universal Input (UI)	Analog Input, Voltage Mode, 0–10 VDC Analog Input, Current Mode, 4–20 mA[2] Analog Input, Resistive Mode, 0–2k ohm, resistance temperature detector (RTD) (1k NI [Johnson Controls], 1k PT, A99B SI), negative temperature coefficient (NTC) (10k Type L, 2.252k Type 2) Binary Input, Dry Contact Maintained Mode	4 (Does not support Current Mode)	2	6
Binary Input (BI)	Dry Contact Maintained Mode Pulse Counter/Accumulator Mode (High Speed), 100 Hz	6	1	2
Analog Output (AO)	Analog Output, Voltage Mode, 0–10 VDC Analog Output, Current Mode, 4–20 mA	2 (Does not support Current Mode)		2
Binary Output (BO)	24 VAC Triac	2 (External Power Only)	3	3
Configurable Output (CO)	Analog Output, Voltage Mode, 0–10 VDC Binary Output Mode, 24 VAC Triac	2	4	4

1 The FEC2511 is currently only available in Europe. Contact your local Johnson Controls representative for more information.
2 Analog Input, Current Mode is set by hardware for the FEC26, and by software for the FEC16.

Table 2: FEC Series Ordering Information

Product Code Number	Description
MS-FEC1611-1	10-Point Field Equipment Controller with 2 UI, 1 BI, 3 BO, and 4 CO; 24 VAC; FC and SA Bus Support
MS-FEC1611-1ET	10-Point Field Equipment Controller Extended Temperature controller for rooftop applications. Supports Operational Temperature Range of -40 to 70°C (-40 to 158°F).
MS-FEC1621-1	10-Point Field Equipment Controller with 2 UI, 1 BI, 3 BO, and 4 CO; 24 VAC; FC and SA Bus Support; Integral Display and 6-Button Navigation Touchpad
MS-FEC2511-0[1]	16-Point Field Equipment Controller with 4 UI, 6 BI, 2 AO, 2 BO, and 2 CO; 24 VAC; FC and SA Bus Support. The FEC2511 model does not support current mode.
MS-FEC2611-0	17-Point Field Equipment Controller with 6 UI, 2 BI, 3 BO, 2 AO, and 4 CO; 24 VAC; FC and SA Bus Support
MS-FEC2611-0ET	FEC2611 Extended Temperature controller for rooftop applications. Supports Operational Temperature Range of -40 to 70°C (-40 to 158°F).
MS-FEC2621-0	17-Point Field Equipment Controller with 6 UI, 2 BI, 3 BO, 2 AO, and 4 CO; 24 VAC; FC and SA Bus Support; Integral Display and 6-Button Navigation Touchpad

1 This model is currently only available in Europe. Contact your local Johnson Controls representative for more information.

Table 3: FEC Series for Smoke Control Ordering Information

Product Code Number[1,2]	Description
MS-FEC1611-1U	10-Point Field Equipment Controller with 2 UI, 1 BI, 3 BO, and 4 CO; 24 VAC, FC and SA Bus, with Mounting Base
MS-FEU1610-0U	10-Point Field Equipment Controller with 2 UI, 1 BI, 3 BO, and 4 CO; 24 VAC; FC and SA Bus Support; with Mounting Base
MS-FEC2611-0U	17-Point Field Equipment Controller with 6 UI, 2 BI, 3 BO, 2 AO, and 4 CO; 24 VAC, FC and SA Bus, with Mounting Base

Table 3: FEC Series for Smoke Control Ordering Information

Product Code Number[1,2]	Description
MS-FEC2621-0U	17-Point Field Equipment Controller with 6 UI, 2 BI, 3 BO, 2 AO, and 4 CO; 24 VAC; FC and SA Bus Support; Integral Display and 6-Button Navigation Touchpad
MS-FEU2610-0U	17-Point Field Equipment Controller with 6 UI, 2 BI, 3 BO, 2 AO, and 4 CO; 24 VAC; FC and SA Bus Support; with Mounting Base

1 These devices are UL/ULC 864 Listed, File S4977, 10th Edition UUKL/ORD-C100-13 UUKLC Smoke Control System. These devices must be ordered in a Smoke Control UUKL listing.

2 All field controllers in a smoke control system must be mounted in Johnson Controls custom or standard UL 864 panels or in panels that are ordered from Johnson Controls. If these field controllers are used with panels that are not supplied by Johnson Controls, they are not compliant with the UL 864 10th Edition UUKL/ORD-C100-13 UUKLC Smoke Control System listing.

Accessories

Table 4: FEC Accessories

Product Code Number	Description
Mobile Access portal (MAP) Gateway[1]	Refer to the *Mobile Access Portal Gateway Catalog Page (LIT-1900869)* to identify the appropriate product for your region.
MS-DIS1710-0	Local Controller Display: Refer to *Local Controller Display Product Bulletin (LIT-12011273)* for more information.
MS-BTCVT-1[1]	Wireless Commissioning Converter with Bluetooth Technology
MS-BTCVTCBL-700[1]	Cable Replacement Set for the MS-BTCVT-1 or the NS-ATV7003-0; Includes One 5 ft (1.5 m) Retractable Cable
WRZ Series Wireless Room Sensors[1]	Refer to the *WRZ Series Wireless Room Sensors Product Bulletin (LIT-12011653)* for specific sensor model descriptions.
ZFR1800 Series Wireless Field Bus System[1]	This system is used for installations that only support BACnet MS/TP. Refer to the *WNC1800/ZFR182x Pro Series Wireless Field Bus System Product Bulletin (LIT-12012320)* for a list of available products.
NS Series Network Sensors	Refer to the *NS Series Network Sensors Product Bulletin (LIT-12011574)* for specific sensor model descriptions.
Y64T15-0[1]	Transformer, 120/208/240 VAC Primary to 24 VAC Secondary, 92 VA, Foot Mount, 30 in. Primary Leads and 30 in. Secondary Leads, Class 2
Y65A13-0[1]	Transformer, 120 VAC Primary to 24 VAC Secondary, 40 VA, Foot Mount (Y65AS), 8 in. Primary Leads and 30 in. Secondary Leads, Class 2
Y65T42-0	Transformer, 120/208/240 VAC Primary to 24 VAC Secondary, 40 VA, Hub Mount (Y65SP+), 8 in. Primary Leads and Secondary Screw Terminals, Class 2
Y65T31-0[1]	Transformer, 120/208/240 VAC Primary to 24 VAC Secondary, 40 VA, Foot Mount (Y65AR+), 8 in. Primary Leads and Secondary Screw Terminals, Class 2
AP-TBK4SA-0	Replacement MS/TP SA Bus Terminal, 4-Position Connector, Brown (Bulk Pack of 10)
AP-TBK4FC-0	Replacement MS/TP FC Bus Terminal, 4-Position Connector (Bulk Pack of 10)
AP-TBK3PW-0	Replacement Power Terminal, 3-Position Connector, Gray (Bulk Pack of 10)
AS-CBLTSTAT-0	Cable adapter that provides a connection between 8-pin TE-6700 Series sensors and field controllers that do not have a 8-pin sensor connection.
ZFR-USBHA-0[1]	ZFR USB Dongle provides a wireless connection through CCT to allow wireless commissioning of the wirelessly enabled FEC, Advanced Application Field Equipment Controller (FAC), IOM, and VMA16 controllers. Also allows use of the ZFR Checkout Tool (ZCT) in CCT. **Note:** The ZFR-USBHA-0 replaces the IA OEM DAUBI_2400 ZigBee® USB dongle. For additional information on the ZFR-USBHA-0 ZigBee dongle, refer to the *ZFR1800 Series Wireless Field Bus System Technical Bulletin (LIT-12011295)* or *ZFR1800 Series Wireless Field Bus System Quick Reference Guide (LIT-12011630)*.
TL-BRTRP-0[1]	Portable BACnet IP to MS/TP Router

1 This accessory is not qualified for use with a UL 864 UUKL/UUKLC 10th Edition Listed Smoke Control system.

Table 5: FEC Series Technical Specifications

Product Code Numbers	**MS-FEC1611-1:**10-Point FEC **MS-FEC1611-1ET:** FEC1611 Extended Temperature controller for rooftop applications. Supports Operational Temperature Range of -40 to 70°C (-40 to 158°F). **MS-FEC1621-1:** 10-Point FEC with Integral Display and Pushbutton User Interface **MS-FEC2511-0**[1]**:** 16-Point FEC, only available in Europe **MS-FEC2611-0:** 17-Point FEC **MS-FEC2611-0ET:** FEC2611 Extended Temperature controller for rooftop applications. Supports Operational Temperature Range of -40 to 70°C (-40 to 158°F). **MS-FEC2621-0:** 17-Point FEC with Integral Display and Push Button User Interface
	Smoke Control Models: **MS-FEC1611-0U:** 10-Point FEC **MS-FEU1610-0U:** 10-Point FEC **MS-FEC2611-0U:** 17-Point FEC **MS-FEU2610-0U:** 17-Point FEC
Supply Voltage	**MS-FEC1611-x, MS-FEC1611-1ET, MS-FEC2511-0**[1]**, MS-FEC2611-0, MS-FEC2611-0ET, MS-FECx611-0U, and MS-FEUx610-0U:** 24 VAC (nominal, 20 VAC minimum/30 VAC maximum), 50/60 Hz, Power Supply Class 2 (North America), Safety, Extra-Low Voltage (SELV) (Europe)
Power Consumption	**MS-FEC2511-0**[1] **:** 14 VA maximum (no integral display) **MS-FEC1621-1 and MS-FEC2621-0 (with integral display):** 20VA maximum **Note:** VA ratings do not include any power supplied to the peripheral devices connected to Binary Outputs (BOs) or Configurable Outputs (COs), which can consume up to 12 VA for each BO or CO, for a possible total consumption of an additional 84 VA (maximum).
Ambient Conditions	**Operating:** 0 to 50°C (32 to 122°F); 10 to 90% RH noncondensing **Storage:** -40 to 80°C (-40 to 176°F); 5 to 95% RH noncondensing **Note:** FEC models with an -xET suffix have an operating temperature range of -40 to 70°C (-40 to 158°F).
Controller Addressing	**For BACnet-configured controllers:** DIP switch set; valid field controller device addresses 4–127 (device addresses 0–3 and 128-255 are reserved) **For N2-configured controllers:** DIP switch set; valid control device addresses 1–255
Communications Bus[2]	RS-485, field selectable between BACnet MS/TP and N2 communications: 3-wire FC Bus between the supervisory controller and field controllers 4-wire SA Bus between field controller, network sensors, and other sensor/actuator devices, includes a lead to source 15 VDC supply power (from field controller) to bus devices
Processor	**MS-FEC16, MS-FEC26, MS-FEU16, and MS-FEU26 models:** H8SX/166xR Renesas® 32-bit microcontroller **MS-FEC2511-0**[1]**:** RX631 Renesas, 32-bit microcontroller
Memory	**MS-FEC16, MS-FEC26, MS-FEU16, and MS-FEU26 models:** 1 MB Flash Memory and 512 KB RAM **MS-FEC2511-0**[1]**:** 4 MB Flash Memory and 8 MB SDRAM

Table 5: FEC Series Technical Specifications

Input and Output Capabilities	**MS-FEC16 Models:** 2 - Universal Inputs: Defined as 0–10 VDC, 4–20 mA, 0–600k ohm, or Binary Dry Contact 1 - Binary Inputs: Defined as Dry Contact Maintained or Pulse Counter/Accumulator Mode 3 - Binary Outputs: Defined as 24 VAC Triac (selectable internal or external source power) 4 - Configurable Outputs: Defined as 0–10 VDC or 24 VAC Triac BO **MS-FEC2511-0[1] Models:** 4 - Universal Inputs: Defined as 0–10 VDC, 0–600k ohm, or Binary Dry Contact 6 - Binary Inputs: Defined as Dry Contact Maintained or Pulse Counter/Accumulator Mode 2 - Binary Outputs: Does not have internal 24 VAC source, external power is required 2 - Configurable Outputs: Defined as 0–10 VDC or 24 VAC Triac BO 2 - Analog Outputs: Defined as 0–10 VDC **MS-FEC26 Models:** 6 - Universal Inputs: Defined as 0–10 VDC, 4–20 mA, 0–600k ohm, or Binary Dry Contact 2 - Binary Inputs: Defined as Dry Contact Maintained or Pulse Counter/Accumulator Mode 3 - Binary Outputs: Defined as 24 VAC Triac (selectable internal or external source power) 4 - Configurable Outputs: Defined as 0–10 VDC or 24 VAC Triac BO 2 - Analog Outputs: Defined as 0–10 VDC or 4–20 mA
Analog Input/Analog Output Resolution and Accuracy	**MS-FEC16, MS-FEC26, MS-FEU16, and MS-FEU26 models:** Analog Input: 16-bit resolution Analog Output: 16-bit resolution and ±200 mV in 0–10 VDC applications **MS-FEC2511-0[1]:** Analog Input: 15-bit resolution
Terminations	**MS-FEC16 and MS-FEC26 models:** Input/Output: Fixed Screw Terminal Blocks FC Bus, SA Bus, and Supply Power: 3-wire and 4-wire Pluggable Screw Terminal Blocks FC Bus and SA Bus Port: RJ-12 6-pin Modular Jacks **MS-FEC2511-0[1]:** Input/Output: Fixed Screw Terminal Blocks FC Bus, SA Bus, and Supply Power: 3-wire and 4-wire Pluggable Screw Terminal Blocks SA Bus Port: RJ-12 6-pin Modular Jack
Mounting	Horizontal on single 35 mm DIN rail mount (preferred), or screw mount on flat surface with three integral mounting clips on controller
Housing	**MS-FEC16 and MS-FEC26 models:** Enclosure material: ABS and polycarbonate UL94 5VB; self-extinguishing; Plenum-rated protection class: IP20 (IEC529) **MS-FEC2511-0[1]:** Enclosure material: ABS and polycarbonate, Rating V0 minimum Protection Class: IP20 (IEC529)
Dimensions (Height x Width x Depth)	**MS-FEC16 Models:** 150 x 164 x 53 mm (5-7/8 x 6-7/16 x 2-1/8 in.) including terminals and mounting clips **MS-FEC2511-0[1]:** 150 x 164 x 48 mm (5-7/8 x 6-7/16 x 1-7/8 in.) including terminals and mounting clips **MS-FEC26 Models:** 150 x 190 x 53 mm (5-7/8 x 7-1/2 x 2-1/8 in.) including terminals and mounting clips **Note:** Mounting space for all field controllers requires an additional 50 mm (2 in.) space on top, bottom, and front face of controller for easy cover removal, ventilation, and wire terminations.
Weight	**MS-FEC16 Models:** 0.4 kg (0.9 lb) **MS-FEC25 and MS-FEC26 Models:** 0.5 kg (1.1 lb)

Table 5: FEC Series Technical Specifications

Compliance CE	**United States:** UL Listed, File E107041, CCN PAZX, UL 916, Energy Management Equipment; FCC Compliant to CFR47, Part 15, Subpart B, Class A UL Listed, File S4977, UL 864 UUKL/UUKLC 10th Edition Listed, Smoke Control Units and Accessories for Fire Alarm Systems Equipment (models with **U** product code suffix only)
	Canada: UL Listed, File E107041, CCN PAZX7, CAN/CSA C22.2 No. 205, Signal Equipment; Industry Canada Compliant, ICES-003 UL Listed, File S4977, UL 864 UUKL/ORD-C100-13 10th Edition Listed, Smoke Control Units and Accessories for Fire Alarm Systems (models with **U** product code suffix only)
	Europe: CE Mark – Johnson Controls declares that this product is in compliance with the essential requirements and other relevant provisions of the EMC Directive.
	Australia and New Zealand: RCM Mark, Australia/NZ Emissions Compliant
	BACnet International: **MS-FEC16 and MS-FEC26 Models:** BACnet Testing Laboratories (BTL) Protocol Revision 4 Listed BACnet Application Specific Controller (B-ASC) **MS-FEC2511-0**[1]**:** BACnet Testing Laboratories Protocol Revision 9 Listed BACnet Application Specific Controller (B-ASC)

1 MS-FEC2511-0 is currently only available in Europe. Contact your local Johnson Controls representative for more information.
2 For more information, refer to the *MS/TP Communications Bus Technical Bulletin (LIT-12011034).*

The performance specifications are nominal and conform to acceptable industry standards. For application at conditions beyond these specifications, consult the local Johnson Controls office. Johnson Controls shall not be liable for damages resulting from misapplication or misuse of its products.

Building Technologies & Solutions
507 E. Michigan Street, Milwaukee, WI 53202

Metasys® and Johnson Controls® are registered trademarks of Johnson Controls.
All other marks herein are the marks of their respective owners.© 2018 Johnson Controls

Published in U.S.A.
www.johnsoncontrols.com

Series TTE Explosion-Proof RTD Temperature Transmitter

Specifications - Installation and Operating Instructions



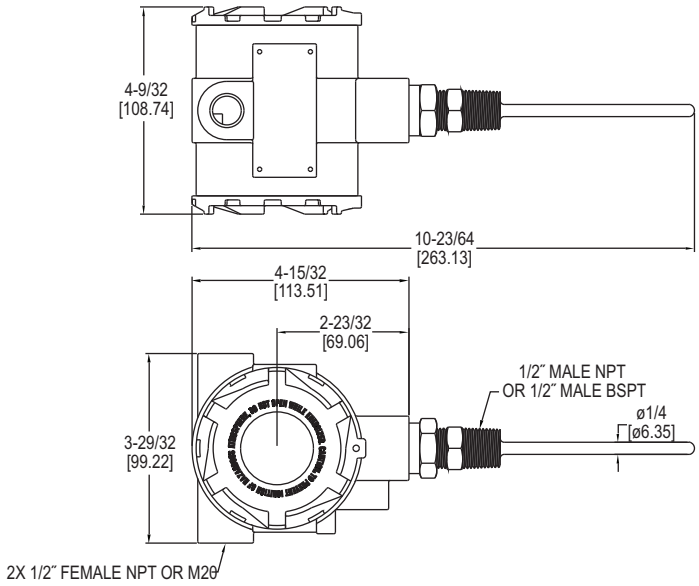

The **Series TTE Explosion-Proof RTD Temperature Transmitter** is the ideal product for hazardous temperature measurement applications. The TTE series has seven pre-programmed temperature ranges that are selectable via an internal dip switch. For those applications that need a custom range, the transmitter can be easily configured for any range between -30 to 250°F with a minimum span of 40°F. The span and zero can be quickly adjusted with a simple push button design. This unit has optional listings of FM for use in Class I, Division 1, Groups B, C and D, Class II, Division 1, Groups E, F and G and Class III atmospheres or ATEX (Directive 2014/34/EU) for CE Ex II 2 G Ex db IIC T6...T4 Gb (-20°C ≤ Ta ≤ + 70°C), CE Ex II 1 D Ex ta IIIC T111°C Da (-20°C ≤ Ta ≤ + 70°C) and IECEx for Ex db IIC T6...T4 Gb (-20°C ≤ Ta ≤ + 70°C), Ex ta IIIC T111°C Da (-20°C ≤ Ta ≤ + 70°C). The compact housing allows for the transmitter to be mounted in virtually any application.

The Series TTE is ideally suited for refrigeration, building automation, commercial hot water heaters and boilers, and water chillers applications.

MODEL CHART

Example	TTE	1	04	W	LCD	Explosion-proof RTD temperature transmitter, FM rated, 4″ probe, with LCD display
Series	TTE					Series TTE explosion-proof RTD temperature transmitter
Agency		1 2				FM* ATEX/IECEx flameproof
Probe Length			02 04 06 09 12 15 18			2″ probe 4″ probe 6″ probe 9″ probe 12″ probe 15″ probe 18″ probe
Construction				W		Well probe
Options					Blank BSPT C5 LCD M20	No LCD display 1/2 male BSPT process connection C5-M housing paint specification LCD display Female M20 thread electrical connection

*Options that do not have ATEX and IECEx.

Attention: Units without the "2" suffix following "TTE" are not directive 2014/34/EU (ATEX) Complaint. These units are not intended for use in potentially hazardous atmospheres in the EU. These units may be CE marked for other directives of the EU.

SPECIFICATIONS

Temperature Sensor: Pt1000, 0.00385 DIN.
Output Temperature Ranges: User selectable – any range between -30 to 250°F with a minimum span of 40°F.
Temperature Limits: Ambient: -4 to 158°F (-20 to 70°C); Process: -30 to 250°F (-34.4 to 120°C).
Accuracy: Transmitter ±0.1% FS; Probe ±0.3% FS.
Thermal Drift Effects: ±0.02%/°C max.
Response Time: 250 ms.
Wetted Materials: 316 stainless steel.
Process Connection: 1/2″ male NPT or 1/2 male BSPT.
Conduit Connection: 1/2″ female NPT or M20.
Probe Length: 2″ to 18″ (depending on model).
Pressure Limits: 2000 PSI.
Power Requirements: 10 to 35 VDC.
Output Signal: 4-20 mA (two wire loop powered).
Optional Display: 2 lines X 8 character LCD.
Enclosure Rating: Weatherproof and Explosion-proof. Listed with FM for Class I, Division 1, Groups B, C and D, and dust-ignitionproof for Class II, Division 1, Groups E, F and G and Class III atmospheres.
ATEX Certified: CE 0518 Ex II 2 G Ex db IIC T6...T4 Gb, CE Ex II 1 D Ex ta IIIC T111°C Da, T6 Process Temp ≤80°C, Temperature Class T5 Process Temp ≤95°C, Temperature Class T4 Process Temp ≤120°C as defined on nameplate. EU-type Cerificate No.: EMT17ATEX0021 X.
ATEX Standards: EN 60079-0:2012+A11:2013; EN 60079-1:2015; EN 60079-31:2014.
IECEx Certified: For Ex db IIC T6...T4 Gb, Ex ta IIIC T111°C Da, T6 Process Temp ≤80°C, Temperature Class T5 Process Temp ≤95°C, Temperature Class T4 Process Temp ≤120°C as defined on nameplate.
IECEx Certificate of Conformity: Element IECEx EMT 17.0007X; IECEx Standards: IEC 60079-0:2011 (Edition 6); IEC 60079-1:2014 (Edition 7); IEC 60079-31:2013 (Edition 2).
Weight: 2 lb 8 oz (1134 g).
Agency Approvals: FM, CE, ATEX/IECEx.

DWYER INSTRUMENTS, INC.
P.O. BOX 373 • MICHIGAN CITY, INDIANA 46360, U.S.A.
Phone: 219/879-8000 www.dwyer-inst.com
Fax: 219/872-9057 e-mail: info@dwyermail.com

INSTALLATION

1. **Location:** Select a location where the temperature of the transmitter will be between -4 and 158°F. Distance from the receiver is limited only by total loop resistance.
2. **Position:** The transmitter is not position sensitive. Units with the optional display should be mounted for ease of viewing the display.
3. **Electrical Connection: Wire Length** - The maximum length of wire connecting the transmitter and receiver is a function of wire size and receiver resistance. Wiring should not contribute more than 10% of the receiver resistance to total loop resistance. For extremely long runs (over 1000 feet), choose receivers with lower resistance to minimize the size and cost of connecting leads.

Current (4-20 mA) Output Operation

An external power supply is required. See Figure A for diagram of the connection of the power supply, transmitter and receiver. The range of appropriate receiver load resistance (RL) for the DC power supply voltage available is expressed by the formula:

$$R_L = \frac{V_{ps} - 10}{20\ \text{mADC}}$$

Shielded cable is recommended for control loop wiring.

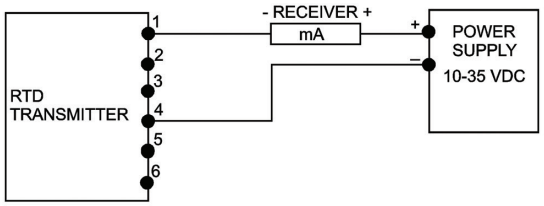

Figure A

FM Explosion-Proof Installation Notes:

1. Install in accordance with any applicable national electric code.
2. Plug unused conduit openings. Plug must engage a minimum of 5 threads.
3. Use a conduit seal within 18 inches of conduit entry.
4. Disconnect power before servicing.

Electrical connections to the RTD Transmitter are made to the terminal block located inside the housing. Unscrew and remove the cover. Wire as shown in Figure B.

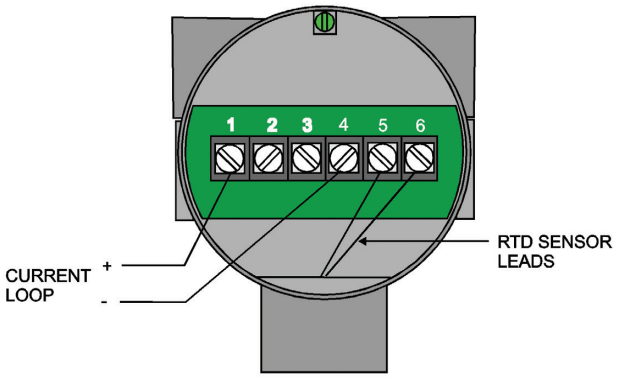

Figure B

Temperature Range Selection

The RTD Transmitter has 7 built in temperature ranges and a user settable range that are selectable by setting the Dip Switch located inside the housing (Figure C). Switches 2, 3, and 4 are used to set the range. To set the desired range, unscrew and remove the cover and set the Dip Switch according to the following table:

	Dip Switch		
Selectable Ranges	2	3	4
40 to 90°F (4.4 to 32.2°C)	OFF	OFF	OFF
-20 to 140°F (-28.9 to 60°C)	ON	OFF	OFF
0 to 100°F (-17.8 to 37.8°C)	OFF	ON	OFF
30 to 240°F (-1.1 to 115.6°C)	ON	ON	OFF
32 to 212°F (0 to 100°C)	OFF	OFF	ON
32 to 122°F (0 to 50°C)	ON	OFF	ON
-30 to 65°C (-1.1 to 18.3°C)	OFF	ON	ON
User Settable	ON	ON	ON

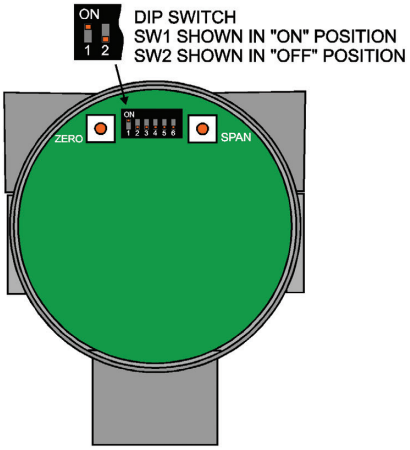

Figure C

Setting and Calibrating the User Settable Range
By setting SWITCH 2, 3, and 4 on, the RTD Transmitter may be adjusted to a custom user specified range. The range may be any values between –30°F and +250°F (-34 to +121°C) with a MINIMUM SPAN of 40°F (22°C).

Equipment Required
In order to calibrate the unit for a custom range, a precision RTD simulator that can simulate a 1000 OHM DIN type RTD or precision decade box is required. The device must be capable of generating the correct RTD resistance to 0.1% or better.

Calibration Procedure
1. Set DIP SWITCHES 2, 3 and 4 ON.
2. Remove the RTD sensor leads from terminals 5 and 6 (Figure B). Connect the precision RTD simulator or decade box to terminals 5 and 6.
3. Wire instrument as previously discussed. A current meter may be wired in series with the unit to verify the correct current output, but this is not necessary for calibration. Apply power to the unit.
4. If a precision RTD simulator is used, make sure it is set to simulate a 1000 OHM DIN 0.00385 RTD. Then set it to the desired minimum temperature. If a decade box is used refer to the table in Appendix A (°F) or Appendix B (°C) and set it to the resistance that represents the desired minimum temperature.
5. Press the ZERO button. If the unit has the optional LCD, the display will read ZERO OK momentarily. If a current meter is wired, it will read 4.00mA.
6. Repeat step 4 using the value for the maximum desired temperature.
7. Press the SPAN button. If the unit has the optional LCD, the display will read SPAN OK momentarily. If a current meter is wired, it will read 20.00mA.
8. Turn off power to the unit. Disconnect the RTD simulator or decade box and reconnect the RTD sensor to terminals 5 and 6. Calibration is complete.

Note: The calibration procedure does not effect the calibration of any of the built in ranges.

°F and °C Selection
If the unit has the optional LCD display, DIP SWITCH 1 sets the display to read in °F or °C. SWITCH 1 “OFF” = °F
SWITCH 1 “ON” = °C.

Output Current Display
If the unit has the optional LCD display, the lower display will show the output current if DIP SWITCH 5 is “ON”. Setting DIP SWITCH 5 “OFF” causes the lower display to be blank.

Open RTD Protection
Upon detecting an open RTD, the unit may be set to force the output to read 3.5mA or 21mA based upon the setting of DIP SWITCH 6.
SWITCH 6 “OFF”, output forced to 3.5mA
SWITCH 6 “ON”, output forced to 21mA

Calibration
The unit requires no calibration. An internal precision resistor continually self calibrates the unit. Calibration may be verified by removing the sensor leads and testing the unit against a precision RTD simulator or a precision decade box. If the unit is found to be out of calibration it must be returned to the factory for service.

ELECTRICAL CONNECTIONS
Connect wire leads in accordance with local electrical codes. For units supplied with both internal ground and external bonding terminals, the ground screw inside the housing must be used to ground the control. The external bonding screw is for supplementary bonding when allowed or required by local code. When external bonding conductor is required, conductor must be wrapped a minimum of 180° about the external bonding screw. See below.

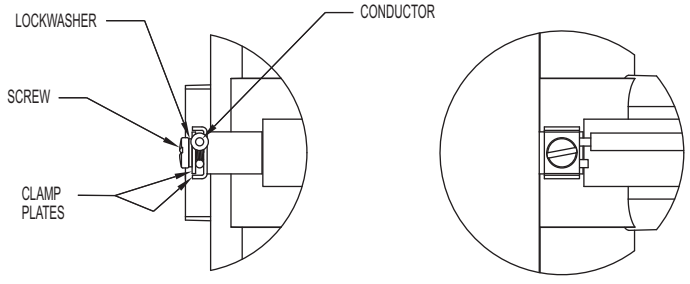

BOTTOM VIEW DETAIL FRONT VIEW DETAIL

EU-Type Certificate, IECEx Installation Instructions:
Cable Connection
The cable entry device shall be certified in type of explosion protection flameproof enclosure “db”, suitable for conditions of use and correctly installed. For ta ≥ 70°C cable and cable gland rated ≥ 75°C (MIN.) shall be used.

Conduit Connection
An Ex db certified sealing device such as a conduit seal with setting compound shall be provided immediately to the electrical entrance of the transmitter housing. For ta ≥ 70°C wiring and setting compound, in the conduit seal, rated ≥ 75°C shall be used.

Unused entries shall be sealed with an Ex certified blanking device rated for the appropriate zone, equipment group and temperature classification and shall be installed per manufacturer instructions.

Note: For ATEX/IECEx units only: When employed in a Zone 1, EPL Gb (db) application, the temperature class is determined by the maximum ambient and or process temperature. Units are intended to be used in ambient of -20°C≤ Tamb ≤70°C. Units may be used in process temperatures up to 120°C providing the enclosure temperature do not exceed 70°C. The standard Temperature Class is T6 Process Temp ≤80°C. Remaining temperature classes are, Temperature Class of T5 Process Temp ≤95°C and Temperature Class T4 Process Temp ≤ 120°C. Refer to Certificate No: Element IECEx EMT17.0007X for conditions of safe use for IECEx compliant units. All wiring, conduit and enclosures must meet applicable codes for hazardous areas. Conduits and enclosures must be properly sealed. For outdoor or other locations where temperatures vary widely, precautions should be taken to prevent condensation inside enclosure. Electrical components must be kept dry at all times.

When employed in a Zone 20, EPL Da (ta) application, the equipment is to be used with a power source rated for a prospective short circuit current of 10 kA. If the power source is rated for a prospective short circuit current of less than 10 kA, the end user or installer must mark the equipment with the prospective short circuit current rating of the power supply it is used in conjunction with.

CAUTION: To prevent ignition of hazardous atmospheres, disconnect the device from the supply circuit before opening. Keep assembly tightly closed when in use.

MAINTENANCE
Inspect and clean wetted parts at regular intervals. The cover should be in place at all times to protect, the internal components from dirt, dust and weather and to maintain hazardous location ratings. Disconnect device from the supply circuit before opening to prevent ignition of hazardous atmosphere. Repairs to be conducted by Dwyer Instruments, Inc (field repair should not be attempted and may void warranty).

⚠ WARNING Repairs to electrical connection, process connection and flameproof joints are prohibited to maintain safe use of the product.

Units in need of repair should be returned to the factory prepaid. Be sure to include a brief description of the problem plus any relevant application notes. Contact customer service to receive a return goods authorization number for shipping.

Appendix A - RTD Table, ˚F Plt 1000 DIN 0.00385
Values are in ohms

TEMP, °F	-0	-1	-2	-3	-4	-5	-6	-7	-8	-9
-30	864.7									
-20	886.6	884.4	882.2	880.0	877.8	875.6	873.5	871.3	869.1	866.9
-10	908.5	906.3	904.1	901.9	899.7	897.6	895.4	893.2	891.0	888.8
0	930.3	928.2	926.0	923.8	921.6	919.4	917.2	915.0	912.9	910.7
TEMP, °F	**0**	**1**	**2**	**3**	**4**	**5**	**6**	**7**	**8**	**9**
0	930.3	932.5	934.7	936.9	939.1	941.2	943.4	945.6	947.8	950.0
10	952.1	954.3	956.5	958.7	960.9	963.0	965.2	967.4	969.6	971.7
20	973.9	976.1	978.3	980.4	982.6	984.8	987.0	989.1	991.3	993.5
30	995.7	997.8	1000.0	1002.2	1004.3	1006.5	1008.7	1010.9	1013.0	1015.2
40	1017.4	1019.5	1021.7	1023.9	1026.0	1028.2	1030.4	1032.5	1034.7	1036.9
50	1039.0	1041.2	1043.4	1045.5	1047.7	1049.9	1052.0	1054.2	1056.3	1058.5
60	1060.7	1062.8	1065.0	1067.1	1069.3	1071.5	1073.6	1075.8	1077.9	1080.1
70	1082.3	1984.4	1086.6	1088.7	1090.9	1093.0	1095.2	1097.4	1099.5	1101.6
80	1103.8	1106.0	1108.1	1110.3	1112.4	1114.6	1116.7	1118.9	1121.0	1123.2
90	1125.3	1127.5	1129.6	1131.8	1133.9	1136.1	1138.2	1040.4	1142.5	1144.7
TEMP, °F	**0**	**1**	**2**	**3**	**4**	**5**	**6**	**7**	**8**	**9**
100	1146.8	1149.0	1151.1	1153.3	1155.4	1157.6	1159.7	1161.8	1164.0	1166.1
110	1168.3	1170.4	1172.6	1174.7	1176.9	1179.0	1181.1	1183.3	1185.4	1187.6
120	1189.7	1191.8	1194.0	1196.1	1198.3	1200.4	1202.5	1204.7	1207.0	1208.9
130	1211.1	1213.2	1215.4	1217.5	1219.6	1221.8	1223.9	1226.0	1228.2	1230.3
140	1232.4	1234.6	1236.7	1238.8	1241.0	1243.1	1245.2	1247.3	1249.5	1251.6
150	1253.7	1255.9	1258.0	1260.1	1262.2	1264.4	1266.5	1268.6	1270.8	1272.9
160	1275.0	1277.1	1279.3	1281.4	1283.5	1285.6	1287.8	1289.9	1292.0	1294.1
170	1296.2	1298.4	1300.5	1302.6	1304.7	1306.9	1309.0	1311.1	1313.2	1315.3
180	1317.5	1319.6	1321.7	1323.8	1325.9	1328.0	1330.2	1332.3	1334.4	1336.5
190	1338.6	1340.7	1342.8	1345.0	1325.9	1349.2	1351.3	1353.4	1355.5	1357.6
TEMP, °F	**0**	**1**	**2**	**3**	**4**	**5**	**6**	**7**	**8**	**9**
200.0	1359.7	1361.9	1364.0	1366.1	1368.2	1370.3	1372.4	1374.5	1376.6	1378.7
210.0	1380.8	1383.0	1385.1	1387.2	1389.3	1391.4	1393.5	1395.6	1397.7	1399.8
220.0	1401.9	1404.0	1406.1	1408.2	1410.3	1412.4	1414.5	1416.6	1418.7	1420.8
230.0	1422.9	1425.0	1427.1	1429.2	1431.3	1433.4	1435.5	1437.6	1439.7	1441.8
240.0	1443.9	1446.0	1448.1	1450.2	1452.3	1454.4	1456.5	1458.6	1460.7	1462.8
250.0	1464.9									

Appendix B - RTD Table, ˚C Plt 1000 DIN 0.00385
Values are in ohms

TEMP, °C	-0	-1	-2	-3	-4	-5	-6	-7	-8	-9
-30	888.2	878.3	874.3	870.4	866.4					
-20	921.6	917.7	913.7	909.8	905.9	901.9	898.0	894.0	890.1	886.2
-10	960.9	956.9	953.0	949.1	945.2	941.2	937.3	933.4	929.5	925.5
0	1000.0	996.1	992.2	988.3	984.4	980.4	976.5	972.6	968.7	964.8
TEMP, °C	**0**	**1**	**2**	**3**	**4**	**5**	**6**	**7**	**8**	**9**
0	1000.0	1003.9	1007.8	1011.7	1015.6	1019.5	1023.4	1027.3	1031.2	1035.1
10	1039.0	1042.9	1046.8	1050.7	1054.6	1058.5	1062.4	1066.3	1070.2	1074.1
20	1077.9	1081.8	1085.7	1089.6	1093.5	1097.4	1101.2	1105.1	1109.0	1112.9
30	1116.7	1120.6	1124.5	1128.3	1132.2	1136.1	1140.0	1143.8	1147.7	1151.5
40	1155.4	1159.3	1163.1	1167.0	1170.9	1174.7	1178.6	1182.4	1186.3	1190.1
50	1194.0	1197.8	1201.7	1205.5	1209.4	1213.2	1217.1	1220.9	1224.7	1228.6
60	1232.4	1236.3	1240.1	1243.9	1247.8	1251.6	1255.4	1259.3	1263.1	1266.9
70	1270.8	1274.6	1278.4	1243.9	1286.1	1289.9	1293.7	1297.5	1301.3	1305.2
80	1309.0	1312.8	1316.6	1320.4	1324.2	1328.0	1331.8	1335.7	1339.5	1343.3
90	1347.1	1350.9	1354.7	1358.5	1362.3	1366.1	1369.9	1373.7	1377.5	1381.3
TEMP, °C	**0**	**1**	**2**	**3**	**4**	**5**	**6**	**7**	**8**	**9**
100	1385.1	1388.9	1392.6	1396.4	1400.2	1404.0	1407.8	1411.6	1415.4	1419.1
110	1422.9	1426.7	1430.5	1434.3	1438.0	1441.8	1445.6	1449.4	1453.1	1456.9
120	1460.7	1464.5								

DWYER INSTRUMENTS, INC.
P.O. BOX 373 • MICHIGAN CITY, INDIANA 46360, U.S.A.
Phone: 219/879-8000 **dwyer-inst.com**
Fax: 219/872-9057 **e-mail: info@dwyermail.com**

Émetteur de température RTD antidéflagration de série TTE

Spécifications - Installation et mode d'emploi



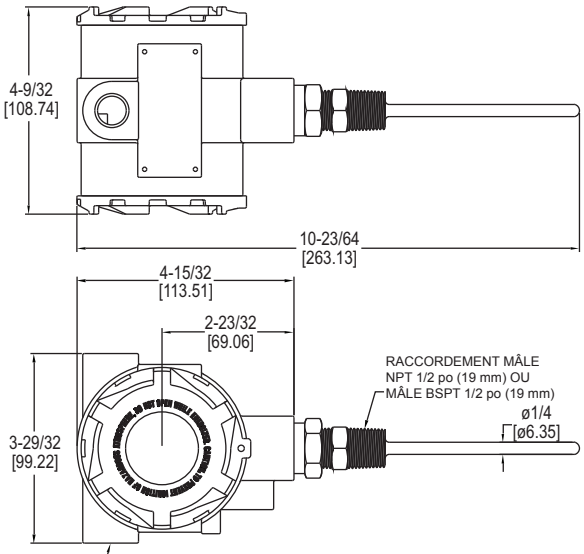

L'émetteur de température RTD antidéflagration de **série TTE** est le produit idéal pour les applications de mesure des températures à risque. La série TTE possède sept plages de mesure de température pré-programmées sélectionnables par l'intermédiaire d'un commutateur dip interne. Pour les applications qui nécessitent une plage personnalisée, l'émetteur peut facilement être configuré pour tout type de plage allant de -30 à 250 °F (-34,4 à 120 °C). avec une étendue minimale de 40 °F (4,44 °C). L'étendue et le zéro peuvent être rapidement réglés par simple pression d'un bouton. Cet appareil possède des listes FM optionnelles pour une utilisation en atmosphères Classe I, Division 1, Groupes B, C et D, Classe II, Division 1, Groupes E, F et G et Classe III ou ATEX (Directive 2014/34/UE) pour CE Ex II 2 G Ex db IIC T6...T4 Gb (-20°C ≤ Ta ≤ + 70°C), CE Ex II 1 D Ex ta IIIC T111°C Da (-20°C ≤ Ta ≤ + 70°C) et IECEx pour Ex db IIC T6... T4 Gb (-20°C ≤ Ta ≤ + 70°C), Ex ta IIIC T111°C Da (-20°C ≤ Ta ≤ + 70°C). Le boîtier compact permet à l'émetteur d'être installé sur quasi toutes les applications.

La série TTE est idéale pour les applications de réfrigération, l'automatisation des bâtiments, les chaudières et les ballons d'eau chaude commerciale et les refroidisseurs d'eau.

TABLEAU DU MODÈLE

Exemple	**TTE**	**1**	**04**	**W**	**LCD**	**Émetteur de température RTD antidéflagration TTE, FM nominale, sonde 4 po (10,16 cm), avec affichage LCD**
Séries	TTE					Émetteur de température RTD antidéflagration de série TTE
Agence		1 2				FM* Ignifugé ATEX/IECEx
Longueur de sonde			02 04 06 09 12 15 18			Sonde 2 po (5,08 cm) Sonde 4 po (10,16 cm) Sonde 6 po (15,24 cm) Sonde 9 po (22,86 cm) Sonde 12 po (30,48 cm) Sonde 15 po (38,10 cm) Sonde 18 po (45,72 cm)
Construction				W		Sonde de niveau
Options					Vierge BSPT C5 LCD M20	Nombre d'écran LCD Processus de raccordement BSPT mâle de 1/2 po (19 mm) Caractéristiques de la peinture du boîtier C5-M Écran LCD Raccordement électrique fileté femelle M20

*Options qui ne sont pas homologuées ATEX ni IECEx.

Attention : Les unités sans le suffixe "2" après la mention "TTE" ne sont pas homologuées par la directive 2014/34/EU (ATEX). Ces unités ne sont pas conçues pour une utilisation en atmosphère potentiellement dangereuses au sein de l'Union Européenne. Ces unités peuvent être estampillées CE pour d'autres directives de l'Union Européenne.

SPÉCIFICATIONS

Capteur de température : Pt1000, 0.00385 DIN.
Plages de température de sortie : Sélectionnable par l'utilisateur – n'importe quelle plage entre -30 à 250 °F (-34,4 à 120 °C). avec une étendue minimale 40 °F.
Limites de température : Ambiante : -4 à 158 °F (-20 à 70 °C) ; en fonction : -30 à 250 °F (-34,4 à 120 °C).
Précision : Émetteurs ±0,1 % FS; Sonde ±0,3 % FS.
Effets de dérive thermique : ±0,02 %/°C max.
Temps de réaction : 250 ms.
Matériaux mouillés : Acier inoxydable 316.
Processus de raccordement : Raccordement mâle NPT 1/2 po (19 mm) ou mâle BSPT 1/2 po (19 mm).
Raccord des conduits : Raccod femelle NPT 1/2 po (19 mm) ou M20.
Longueur de sonde : 2 po à 18 po (5,08 cm à 45,72 cm) (selon le modèle).
Limites de pression : 2000 PSI (137,89 bar).
Puissance électrique nécessaire : 10 à 35 VDC.
Signal en sortie : 4-20 mA (deux boucles de courant alimentées).
Écran en option : Écran LCD 2 lignes X 8 caractères.
Indice de protection du boîtier : Étanche et antidéflagration Approuvé FM pour classe I, division 1, groupes B, C et D et protection contre les coups de poussière pour Classe II, Division 1, Groupes E, F et G et atmosphères classe III.
Certifié ATEX : CE 0518 Ex II 2 G Ex db IIC T6...T4 Gb, CE Ex II 1 D Ex ta IIIC T111°C Da, T6 Température de fonctionnement ≤80 °C, Température Classe T5 Température de fonctionnement ≤95 °C, Température Classe T4 Température de fonctionnement ≤120 °C comme indiqué sur la plaque signalétique. Numéro de certificat de type UE : EMT17ATEX0021 X.
Normes ATEX : EN 60079-0:2012+A11:2013; EN 60079-1:2015; EN 60079-31:2014.
Certifié IECEx : Pour Ex db IIC T6...T4 Gb, Ex ta IIIC T111°C Da, T6 Température de fonctionnement ≤80 °C, Température Classe T5 Température de fonctionnement ≤95 °C, Température Classe T4 Température de fonctionnement ≤120 °C comme indiqué sur la plaque signalétique.
Certificat de conformité IECEx : Normes élément IECEx EMT 17.0007X; IECEx : CEI 60079-0:2011 (Edition 6); CEI 60079-1:2014 (Edition 7);
CEI 60079-31:2013 (Edition 2).
Poids : 2 livres 8 onces (1 134 g).
Homologations : FM, CE, ATEX/IECEx.

DWYER INSTRUMENTS, INC.
P.O. **BOX 373 • MICHIGAN CITY, INDIANA 46360, États-Unis**
Téléphone : +1 219/879-8000 **www.dwyer-inst.com**
Fax : +1 219/872-9057 **courriel : info@dwyermail.com**

INSTALLATION

1. **Emplacement :** Sélectionner un emplacement où la température de l'émetteur se situera entre -4 et 158°F (-20 et 70 °C). La distance à partir du récepteur est uniquement limitée par la résistance totale de la boucle.
2. **Position :** L'émetteur peut se positionner librement. Les appareils avec d'écran doivent être montés de façon à faciliter la lecture de l'affichage.
3. **Raccordement électrique :** Longueur de câble - La longueur maximale du câble de raccordement de l'émetteur au récepteur dépend de la taille du câble et de la résistance du récepteur. Le câblage ne doit pas contribuer à plus de 10 % de la résistance du récepteur par rapport à la résistance totale de la boucle. Pour les longues distances (supérieures à 1 000 pieds (304,8 m)), choisir des récepteurs avec une résistance plus basse afin de réduire la taille et le coût des câbles de raccordement.

Fonctionnement du courant de sortie (4-20 mA)

Un dispositif d'alimentation électrique externe est nécessaire. Voir figure A pour le schéma de raccordement à l'alimentation électrique, émetteur et récepteur. La plage de charge de résistance appropriée du récepteur (RL) pour la tension d'alimentation CC disponible s'exprime par la formule suivante :

$$R_L = \frac{V_{ps} - 10}{20\ \text{mADC}}$$

L'utilisation d'un câble blindé est recommandé pour le câblage à boucle de contrôle.

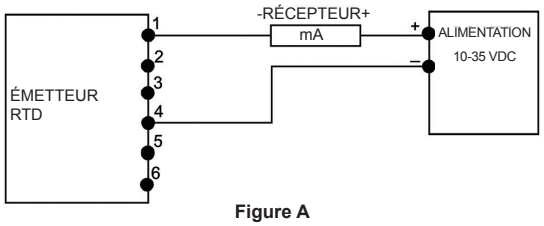

Figure A

Remarques concernant l'installation FM antidéflagration :

1. Installer selon les codes électriques nationaux en vigueur.
2. Brancher toutes les ouvertures de conduit non utilisées. Le branchement doit comporter un minimum de 5 fils.
3. Utiliser un joint de conduit à 18 pouces (45,72 cm) de l'entrée du conduit.
4. Couper l'alimentation électrique avant toute intervention.

Les raccordement électriques vers l'émetteur RTD sont réalisés sur le bornier situé à l'intérieur du boîtier. Dévisser et retirer le couvercle. Brancher comme indiqué sur la figure B.

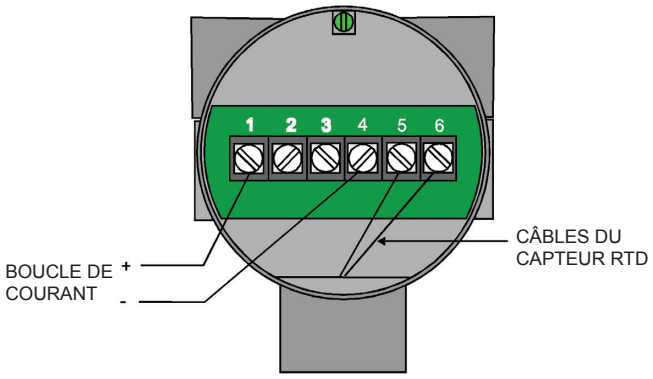

Figure B

Sélection de la plage de températures

L'émetteur RTD possède 7 plages de température pré-programmées ainsi qu'une plage réglable par l'utilisateur au moyen du commutateur Dip situé à l'intérieur du boîtier (figure C). Les commutateurs 2, 3, et 4 sont utilisés pour configurer la plage. Pour configurer la plage souhaitée, dévisser et retirer le couvercle et régler le commutateur Dip selon le tableau suivant :

	Commutateur Dip		
Plages sélectionnables	2	3	4
40 à 90 °F (4,4 à 32,2 °C)	OFF (hors tension)	OFF (hors tension)	OFF (hors tension)
-20 à 140 °F (-28,9 à 60 °C)	ON (sous tension)	OFF (hors tension)	OFF (hors tension)
0 à 100 °F (-17,8 à 37,8 °C)	OFF (hors tension)	ON (sous tension)	OFF (hors tension)
30 à 240 °F (-1,1 à 115,6 °C)	ON (sous tension)	ON (sous tension)	OFF (hors tension)
32 à 212 °F (0 à 100 °C)	OFF (hors tension)	OFF (hors tension)	ON (sous tension)
32 à 122 °F (0 à 50 °C)	ON (sous tension)	OFF (hors tension)	ON (sous tension)
-30 à 65 °F (-1,1 à 18,3 °C)	OFF (hors tension)	ON (sous tension)	ON (sous tension)
Réglable par l'utilisateur	ON (sous tension)	ON (sous tension)	ON (sous tension)

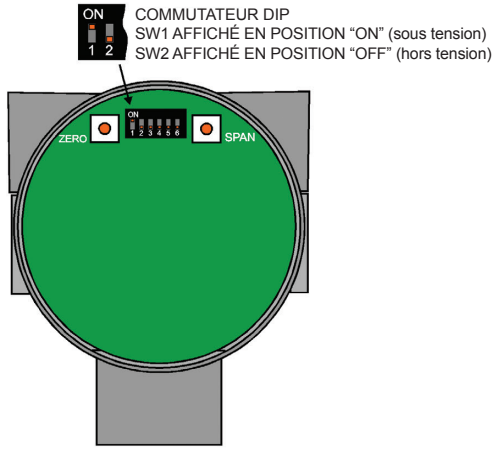

Figure C

Configuration et étalonnage de la plage réglable par l'utilisateur
En configurant le COMMUTATEUR 2, 3 et 4, l'émetteur RTD peut être réglée sur une plage personnalisée par l'utilisateur. La plage peut être configurée avec n'importe quelle valeur comprise entre –30 °F et +250 °F (-34 à +121 °C) avec une ÉTENDUE MINIMALE de 40 °F (22 °C).

Équipement nécessaire
Pour étallonner l'appareil pour une plage personnalisée, il faut utiliser un simulateur RTD de précision pouvant simuler un RTD de type 1000 OHM DIN ou une boîte à décades de précision. Le dispositif doit être capable de générer la résistance RTD correcte à 0,1 % près ou mieux.

Procédure d'étalonnage
1. Régler les COMMUTATEURS DIP 2, 3 et 4 sur ON (sous tension).
2. Retirer les câbles du capteur RTD des bornes 5 et 6 (Figure B). Brancher le simulateur de précision RTD ou la boîte à décades des bornes 5 et 6.
3. Brancher l'instrument comme indiqué précédemment. Un courantomètre peut être branché en série avec l'unité pour vérifier que le courant de sortie est correct, mais cela n'est pas nécessaire pour l'étalonnage. Mettre l'unité sous tension.
4. Si un simulateur de précision RTD est utilisé, vérifier qu'il est réglé pour simuler un RTD 1000 OHM DIN 0.00385. Puis, régler à la température minimale souhaitée. Si une boîte à décades est utilisée, consulter le tableau de l'annexe A (°F) ou de l'annexe B (°C) puis régler à la résistance correspondant à la température souhaitée.
5. Appuyer sur le bouton ZERO (Zéro). Si l'appareil possède un écran LCD, l'écran affiche temporairement ZERO OK (Zéro OK). Si le courantomètre est branché, il affiche 4,00 mA.
6. Répéter l'étape 4 en utilisant la valeur correspondant à la température maximale souhaitée.
7. Appuyer sur le bouton SPAN (étendue). Si l'appareil possède un écran LCD, l'écran affiche temporairement SPAN OK (étendue ok). Si le courantomètre est branché, il affiche 20,00 mA.
8. Mettre l'untié hors tension. Débrancher le simulateur RTD ou la boîte à décades et rebrancher le capteur RTD aux bornes 5 et 6. L'étalonnage est terminé.

Remarque : La procédure d'étalonnage n'affecte pas l'étalonnage des plages pré-programmées.

Sélection °F et °C
Si l'appareil possède un écran LCD, le COMMUTATEUR DIP 1 règle l'affichage pour une lecteur en °F ou en °C. COMMUTATEUR 1 “OFF (hors tension)” = °F
COMMUTATEUR 1 “ON (sous tension)” = °F

Affichage du courant de sortie
Si l'appareil possède un écran LCD, l'écran du bas affiche le courant de sortie si le COMMUTATEUR DIP 5 est sur "ON". Si le COMMUTATEUR DIP 5 est sur "OFF", l'écran inférieur est vide.

Protection contre les RTD ouverts
Lorsque qu'un RTD ouvert est détecté, l'unité peut être réglé pour forcer la sortie à afficher 3,5 mA ou 21 mA selon le réglage du COMMUTATEUR DIP 6.
COMMUTATEUR 6 “OFF”, sortie forcée sur 3,5 mA
COMMUTATEUR 6 “ON”, sortie forcée sur 21 mA

Étalonnage
L'appareil ne requiert aucun étalonnage. Une résistance de précision interne étalonne automatiquement l'unité. L'étalonnage peut être vérifié en retirant les câbles du capteur et en testant l'appareil à l'aide d'un simulateur de précision RTD ou dune boîte à décades. Si l'appareil est déréglé, il doit être renvoyé à l'usine pour réparation.

RACCORDEMENTS ÉLECTRIQUES
Brancher les câbles électriques conformément aux codes électriques locaux en vigueur. Pour les unités fournies avec, à la fois, des bornes de terre internes et des bornes de raccordement externes, la vis de terre située dans le boîtier doit être utilisée pour relier le contrôle à la terre. La borne à vis externe permet un raccordement supplémentaire quand cela est possible ou quand cela est exigé par le code local. Quand un conducteur d'équipotentialité est requis, le conducteur doit être enroulé à 180° autour de la borne à vis externe. Voir ci-dessous.

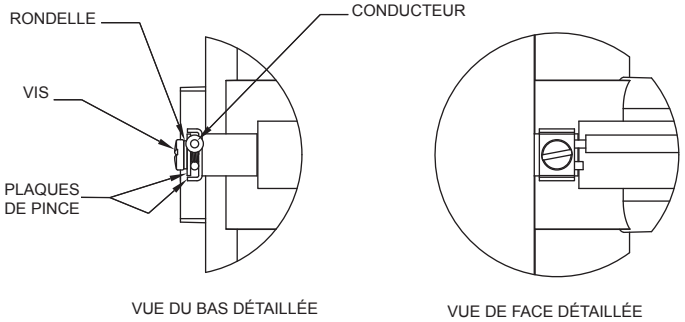

VUE DU BAS DÉTAILLÉE

VUE DE FACE DÉTAILLÉE

Instructions d'installation conformes aux exigences du certificat type CE et IECEx.
Connexion par câble
Le dispositif d'entrée du câble doit être équipé d'un boîtier de protection certifié type « db » en ce qui concerne la protection contre les explosions et les flammes. Il doit être adapté aux conditions d'utilisation et installé correctement. Utiliser un câble et un passe-câbles de cote ≥ 75 °C (MIN) pour une Ta ≥ 70 °C
Raccord des conduits
Un dispositif de scellement certifié Ex db, comme par exemple un joint avec composé durcissable, doit immédiatement être posé à l'entrée du boîtier de l'émetteur. Pour une Ta ≥ 70 °C, à l'intérieur du dispositif de scellement, utiliser un câblage et un composé durcissable de cote ≥ 75 °C.

Les entrées non utilisées doivent être scellées à l'aide d'un dispositif d'obturation certifié Ex adapté à la zone, à la classification du groupe d'appareil et de température appropriée et doit être installé conformément aux instructions du fabricant.

Remarque : Pour unités ATEX et IECEx uniquement : Lorsqu'il est utilisé dans le cadre d'une application Zone 1 EPL Gb (db), la classe de température est déterminée par la température maximale ambiante ou par la température de fonctionnement. Les unités sont conçues pour être utilisées à des températures ambiantes correspondant à -20 °C≤ Tamb ≤70 °C. Les unités peuvent être utilisées à des températures de fonctionnement allant jusqu'à 120 °C à condition que la température du corps du boîtier et du flussostat ne dépasse pas 70 °C. La classe de température standard est la T6 Temp. de fonctionnement ≤80 °C. Les classes de températures restantes sont la classe de température T5 de température de fonctionnement ≤ 95 °C et la classe de température T4 de température de fonctionnement ≤ 120 °C. Consulter les certificats n° : Élement IECEx EMT17 0007 X pour les conditions de sécurité concernant les unités conformes aux exigences IECEx. Tous les câbles, conduites et boîtiers doivent être conformes aux codes en vigueur en matière de zones dangereuses. Les conduites et les boîtiers doivent être correctement scellés. Pour les installations en extérieur ou emplacements où les températures varient largement, des précautions doivent être prises afin d'éviter la condensation à l'intérieur du commutateur ou du boîtier. Les composants électriques doivent être maintenus secs en toute circonstance.

Lorsqu'il est utilisé dans le cadre d'une application de Zone 20 EPL Ea (ta), l'appareil doit être utilisé avec une source d'alimentation évaluée pour d'éventuels courts circuits de 10 kA. Si la source d'alimentation a été évaluée pour d'éventuels courts circuits de moins de 10 kA, l'utilisateur final ou l'installateur doit marquer l'appareil avec le courant nominal de court circuit éventuel de la source d'alimentation avec lequel il fonctionne.

MISE EN GARDE : Pour éviter toute ignition en atmosphère dangereuse, débrancher le dispositif de l'alimentation électrique avant de l'ouvrir. Maintenir l'assemblage bien fermé lors de l'utilisation.

ENTRETIEN
Inspecter et nettoyer les parties mouillées à intervalles réguliers. Le couvercle doit resté en place afin de protéger les composants internes des saletés, de la poussière et du climat et de respecter les règles en matière de risques dus aux emplacements dangereux. Débrancher le dispositif de l'alimentation électrique avant de l'ouvrir afin d'éviter toute ignition en atmosphère dangereuse. Les réparations doivent être conduites par Dwyer Instruments, Inc. (les tentatives de réparation peuvent annuler la garantie).

AVERTISSEMENT Les réparations des raccordements électriques, du raccordement de fonctionnement et des joints ignifuges sont interdites afin de garantir une utilisation sûre du produit.

Les unités nécessitant des réparations doivent être renvoyées à l'usine, aux frais de l'utilisateur. Prendre soin d'inclure une brève description du problème ainsi que toute remarque utile sur les conditions d'utilisation. Contacter le service client pour recevoir un numéro d'autorisation de retour de marchandise.

Annexe A - Tableau RTD, ˚F Plt 1000 DIN 0.00385
Les valeurs sont en ohms

TEMP, °F	-0	-1	-2	-3	-4	-5	-6	-7	-8	-9
-30	864,7									
-20	886,6	884,4	882,2	880,0	877,8	875,6	873,5	871,3	869,1	866,9
-10	908,5	906,3	904,1	901,9	899,7	897,6	895,4	893,2	891,0	888,8
0	930,3	928,2	926,0	923,8	921,6	919,4	917,2	915,0	912,9	910,7
TEMP, °F	**0**	**1**	**2**	**3**	**4**	**5**	**6**	**7**	**8**	**9**
0	930,3	932,5	934,7	936,9	939,1	941,2	943,4	945,6	947,8	950,0
10	952,1	954,3	956,5	958,7	960,9	963,0	965,2	967,4	969,6	971,7
20	973,9	976,1	978,3	980,4	982,6	984,8	987,0	989,1	991,3	993,5
30	995,7	997,8	1000,0	1002,2	1004,3	1006,5	1008,7	1010,9	1013,0	1015,2
40	1017,4	1019,5	1021,7	1023,9	1026,0	1028,2	1030,4	1032,5	1034,7	1036,9
50	1039,0	1041,2	1043,4	1045,5	1047,7	1049,9	1052,0	1054,2	1056,3	1058,5
60	1060,7	1062,8	1065,0	1067,1	1069,3	1071,5	1073,6	1075,8	1077,9	1080,1
70	1082,3	1984,4	1086,6	1088,7	1090,9	1093,0	1095,2	1097,4	1099,5	1101,6
80	1103,8	1106,0	1108,1	1110,3	1112,4	1114,6	1116,7	1118,9	1121,0	1123,2
90	1125,3	1127,5	1129,6	1131,8	1133,9	1136,1	1138,2	1040,4	1142,5	1144,7
TEMP, °F	**0**	**1**	**2**	**3**	**4**	**5**	**6**	**7**	**8**	**9**
100	1146,8	1149,0	1151,1	1153,3	1155,4	1157,6	1159,7	1161,8	1164,0	1166,1
110	1168,3	1170,4	1172,6	1174,7	1176,9	1179,0	1181,1	1183,3	1185,4	1187,6
120	1189,7	1191,8	1194,0	1196,1	1198,3	1200,4	1202,5	1204,7	1207,0	1208,9
130	1211,1	1213,2	1215,4	1217,5	1219,6	1221,8	1223,9	1226,0	1228,2	1230,3
140	1232,4	1234,6	1236,7	1238,8	1241,0	1243,1	1245,2	1247,3	1249,5	1251,6
150	1253,7	1255,9	1258,0	1260,1	1262,2	1264,4	1266,5	1268,6	1270,8	1272,9
160	1275,0	1277,1	1279,3	1281,4	1283,5	1285,6	1287,8	1289,9	1292,0	1294,1
170	1296,2	1298,4	1300,5	1302,6	1304,7	1306,9	1309,0	1311,1	1313,2	1315,3
180	1317,5	1319,6	1321,7	1323,8	1325,9	1328,0	1330,2	1332,3	1334,4	1336,5
190	1338,6	1340,7	1342,8	1345,0	1325,9	1349,2	1351,3	1353,4	1355,5	1357,6
TEMP, °F	**0**	**1**	**2**	**3**	**4**	**5**	**6**	**7**	**8**	**9**
200,0	1359,7	1361,9	1364,0	1366,1	1368,2	1370,3	1372,4	1374,5	1376,6	1378,7
210,0	1380,8	1383,0	1385,1	1387,2	1389,3	1391,4	1393,5	1395,6	1397,7	1399,8
220,0	1401,9	1404,0	1406,1	1408,2	1410,3	1412,4	1414,5	1416,6	1418,7	1420,8
230,0	1422,9	1425,0	1427,1	1429,2	1431,3	1433,4	1435,5	1437,6	1439,7	1441,8
240,0	1443,9	1446,0	1448,1	1450,2	1452,3	1454,4	1456,5	1458,6	1460,7	1462,8
250,0	1464,9									

Annexe B - Tableau RTD, ˚C Plt 1000 DIN 0.00385
Les valeurs sont en ohms

TEMP, °C	-0	-1	-2	-3	-4	-5	-6	-7	-8	-9
-30	888,2	878,3	874,3	870,4	866,4					
-20	921,6	917,7	913,7	909,8	905,9	901,9	898,0	894,0	890,1	886,2
-10	960,9	956,9	953,0	949,1	945,2	941,2	937,3	933,4	929,5	925,5
0	1000,0	996,1	992,2	988,3	984,4	980,4	976,5	972,6	968,7	964,8
TEMP, °C	**0**	**1**	**2**	**3**	**4**	**5**	**6**	**7**	**8**	**9**
0	1000,0	1003,9	1007,8	1011,7	1015,6	1019,5	1023,4	1027,3	1031,2	1035,1
10	1039,0	1042,9	1046,8	1050,7	1054,6	1058,5	1062,4	1066,3	1070,2	1074,1
20	1077,9	1081,8	1085,7	1089,6	1093,5	1097,4	1101,2	1105,1	1109,0	1112,9
30	1116,7	1120,6	1124,5	1128,3	1132,2	1136,1	1140,0	1143,8	1147,7	1151,5
40	1155,4	1159,3	1163,1	1167,0	1170,9	1174,7	1178,6	1182,4	1186,3	1190,1
50	1194,0	1197,8	1201,7	1205,5	1209,4	1213,2	1217,1	1220,9	1224,7	1228,6
60	1232,4	1236,3	1240,1	1243,9	1247,8	1251,6	1255,4	1259,3	1263,1	1266,9
70	1270,8	1274,6	1278,4	1243,9	1286,1	1289,9	1293,7	1297,5	1301,3	1305,2
80	1309,0	1312,8	1316,6	1320,4	1324,2	1328,0	1331,8	1335,7	1339,5	1343,3
90	1347,1	1350,9	1354,7	1358,5	1362,3	1366,1	1369,9	1373,7	1377,5	1381,3
TEMP, °C	**0**	**1**	**2**	**3**	**4**	**5**	**6**	**7**	**8**	**9**
100	1385,1	1388,9	1392,6	1396,4	1400,2	1404,0	1407,8	1411,6	1415,4	1419,1
110	1422,9	1426,7	1430,5	1434,3	1438,0	1441,8	1445,6	1449,4	1453,1	1456,9
120	1460,7	1464,5								

DWYER INSTRUMENTS, INC.
P.O. BOX 373 • MICHIGAN CITY, INDIANA 46360, États-Unis.
Téléphone : +1 219/879-8000 **dwyer-inst.com**
Fax : +1 219/872-9057 **courriel : info@dwyermail.com**

Serie TTE explosionsgeschützter RTD-Temperatursender

Technische Daten – Montage- und Betriebsanleitung



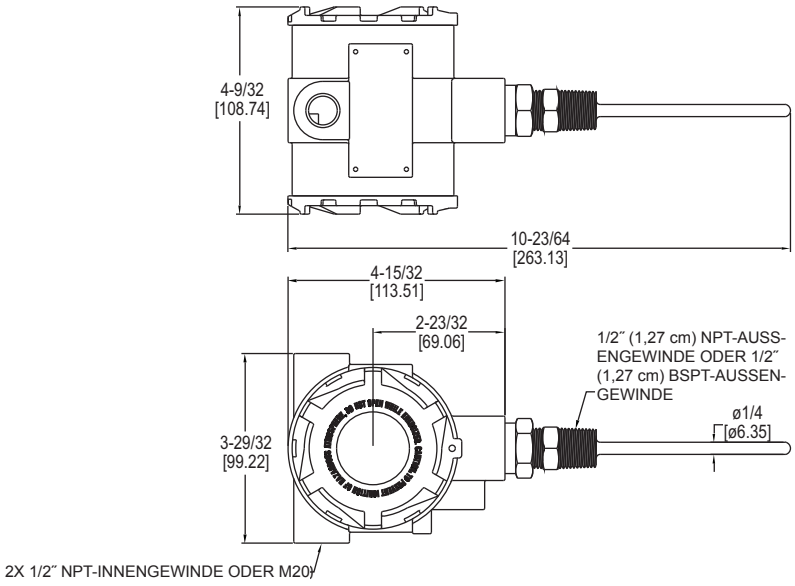

Der **Serie TTE** explosionsgeschützte RTD-Temperatursender ist das ideale Produkt für gefährliche Temperaturmessanwendungen. Die TTE-Serie hat sieben vorprogrammierte Temperaturbereiche, die über einen internen Kippschalter ausgewählt werden können. Anwendungen, die einen benutzerdefinierten Bereich erfordern, kann der Sender auf einfache Weise auf jeden Bereich zwischen -30 bis 250 °F (-34,4 bis 120 °C) mit einer Mindest 40 °F (4,44 °C). Die Spanne und Null können leicht über ein einfaches Druckschalterdesign angepasst werden. Dieses Gerät hat optionale FM-Protokolle zur Verwendung in Klasse I, Division 1, Gruppen B, C und D, Klasse II, Division 1, Gruppen E, F und G und Klasse III-Atmosphären oder ATEX (Direktive 2014/34/EU) für CE Ex II 2 G Ex db IIC T6...T4 Gb (-20°C ≤ Ta ≤ + 70°C), CE Ex II 1 D Ex ta IIIC T111°C Da (-20°C ≤ Ta ≤ + 70°C) und IECEx für Ex db IIC T6...T4 Gb (-20°C ≤ Ta ≤ + 70°C), Ex ta IIIC T111°C Da (-20°C ≤ Ta ≤ + 70°C). Durch das kompakte Gehäuse kann der Sender bei beinahe jeder Anwendung angebracht werden.

Die Serie TTE ist hervorragend geeignet für Kühlung, Gebäudeautomatisierung, handelsübliche Warmwasserbereiter und Boiler, sowie Wasserkühler.

TABELLE

Beispiel	TTE	1	04	W	LCD	Explosionsgeschützter RTD-Temperatursender, FM-Stufe, 4"-Sonde mit LCD-Anzeige
Serie	TTE					Serie TTE explosionsgeschützter RTD-Temperatursender
Behörde		1				FM*
		2				ATEX/IECEx flammensicher
Sondenlänge			02			2″ (5,08 cm) Sonde
			04			4″ (10,16 cm) Sonde
			06			6″ (15,24 cm) Sonde
			09			9″ (22,86 cm) Sonde
			12			12″ (30,48 cm) Sonde
			15			15″ (38,10 cm) Sonde
			18			18″ (45,72 cm) Sonde
Bauweise				W		Trockenlaufsonde
Optionen					Leer	Keine LCD-Anzeige
					BSPT	1/2 Prozessanschluss mit BSPT-Außengewinde
					C5	Farbspezifikationen C5-M-Gehäuse
					LCD	LCD-Anzeige
					M20	Elektrischer Anschluss mit M20-Innengewinde

*Optionen ohne ATEX- und IECEx-Schutz.

Achtung: Geräte ohne die Erweiterung „2“ nach „TTE“ erfüllen nicht die Direktive 2014/34/EU (ATEX). Diese Geräte sind für den Einsatz in explosionsgefährdeten Räumen nicht geeignet. Sie sind nur nach CE getestet.

TECHNISCHE DATEN

Temperatursensor: Pt1000, 0.00385 DIN.
Ausgabetemperaturbereiche: Benutzerdefiniert – beliebiger zwischen -30 bis 250 °F (-34,4 bis 120 °C) mit einem Mindestbereich von 40°F.
Temperaturbereich: Umgebungstemp.: -4 bis 158 °F (-20 bis 70 °C); Prozesstemp: -30 bis 250 °F (-34,4 bis 120 °C).
Genauigkeit: Sender ±0,1 % FS; Sonde ±0,3% FS.
Thermodriftwirkung: ±0,02 %/ °C max.
Reaktionszeit: 250 ms.
Mediumberührende Teile: Edelstahl 316.
Prozessanschluss: 1/2″ (1,27 cm) NPT-Außengewinde oder 1/2" (1,27 cm) BSPT-Außengewinde.
Kabeleingang: 1/2″ (1,27 cm) NPT-Innengewinde oder M20.
Sondenlänge: 2″ (5,08 cm) bis 18″ (45,72 cm) (modellabhängig).
Druckbereich: 2000 PSI.
Leistungsbedarf: 10 bis 35 VDC.
Ausgangssignal: 4-20 mA (betrieben mit Zweileitertechnik).
Optionale Anzeige: LCD mit 2 Zeilen X 8 Zeichen.
Gehäuse: Wettergeschützt und explosionsgeschützt. Aufgeführt mit FM für Klasse I, Division 1, Gruppen B, C und D und staubexplosionsgeschützt für Klasse II, Division 1, Gruppen E, F und G und Klasse-III-Atmosphären.
ATEX Zertifiziert: CE 0518 Ex II 2 G Ex db IIC T6...T4 Gb, CE Ex II 1 D Ex ta IIIC T111°C Da, T6 Prozesstemp ≤80°C, Temperaturklasse T5 Prozesstemp ≤95°C, Temperaturklasse T4 Prozesstemp ≤120°C wie auf dem Typenschild definiert. EU-Typ Zertifikatnr.: EMT17ATEX0021 X.
ATEX-Standards: EN 60079-0:2012+A11:2013; EN 60079-1:2015; EN 60079-31:2014.
IECEx Zertifiziert: Für Ex db IIC T6...T4 Gb, Ex ta IIIC T111°C Da, T6 Prozesstemp ≤80°C, Temperaturklasse T5 Prozesstemp ≤95°C, Temperaturklasse T4 Prozesstemp ≤120°C wie auf dem Namensschild definiert.
IECEx-Konformitätszertifikat: Element IECEx EMT 17.0007X; IECEx-Normen: IEC 60079-0:2011 (Edition 6); IEC 60079-1:2014 (Edition 7); IEC 60079-31:2013 (Edition 2).
Gewicht: 2 lb 8 oz (1134 g).
Zulassungen: FM, CE, ATEX/IECEx.

DWYER INSTRUMENTS, INC.
P.O. BOX 373 • MICHIGAN CITY, INDIANA 46360, USA
Tel.: +1 - 219/879-8000 **www.dwyer-inst.com**
Fax: +1 - 219/872-9057 **E-Mail: info@dwyermail.com**

MONTAGE

1. **Aufstellungsort:** Wählen Sie einen Aufstellungsort, bei dem die Temperatur des Sender zwischen -4 und 158 °F liegt. Der Abstand vom Empfänger wird nur durch die Gesamtschleifenwiderstand begrenzt.
2. **Position:** Der Sender ist nicht ortsempfindlich. Gerät mit der optionalen Anzeige müssen so angebracht werden, dass die Anzeige leicht abzulesen ist.
3. **Elektrischer Anschluss: Kabellänge** - Die maximale Länge des Kabels, das Sender und Empfänger verbindet, ist eine Funktion aus Kabelgröße und Empfängerwiderstand. Das Kabel sollte nicht mehr als 10 % des Empfängerwiderstands zum Gesamtschleifenwiderstand beitragen. Wählen Sie für extrem lange Strecken (über 1000 Fuß) Empfänger mit niedrigem Widerstand, um die Größe und Kosten der Verbindungskabel zu minimieren.

Strom (4-20 mA) Ausgabevorgang

Es wird eine externe Stromquelle benötigt. Siehe Abbildung A für eine Darstellung der Verbindung zu Stromquelle, Sender und Empfänger. Der Bereich des geeigneten Empfängerlastwiderstands (RL) für die verfügbare Spannung der Gleichstromversorgung wird durch die folgende Formel ausgedrückt:

$$R_L = \frac{V_{ps} - 10}{20\ \text{mADC}}$$

Für die Steuerringleitung sollten abgeschirmte Kabel verwendet werden.

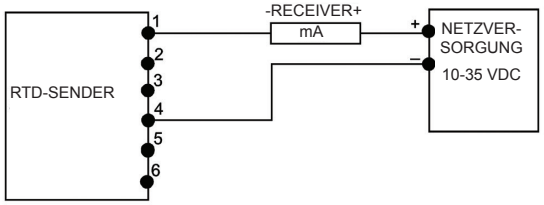

Abbildung A

Hinweise zur explosionsgeschützten FM-Montage:

1. Montieren Sie gemäß aller geltenden nationalen elektrischen Normen.
2. Verschließen Sie nicht verwendete Kabeleinführungen. Stecker muss mindestens 5 Gewinde abdecken.
3. Verwenden Sie ein Kabelsiegel innerhalb von 18 Zoll vom Kabeleingang.
4. Trennen Sie das Gerät vor Wartungsarbeiten von der Stromversorgung.

Elektrische Verbindungen zum RTD-Sender werden an der Klemmleiste ausgeführt, die sich im Gehäuse befindet. Lösen Sie die Schrauben und entfernen Sie die Abdeckung. Verkabeln Sie wie in Abbildung B gezeigt.

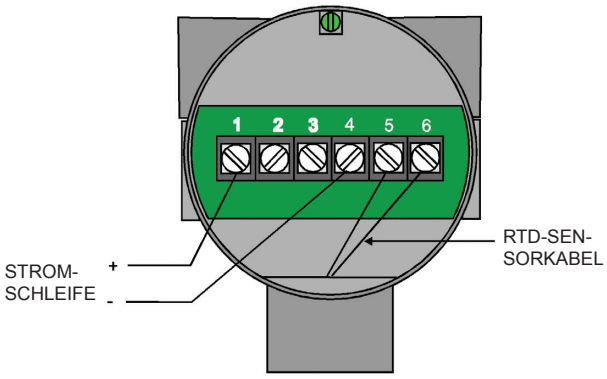

Abbildung B

Auswahl des Temperaturbereichs

Der RTD-Sender hat 7 eingebaute Temperaturbereiche und einen benutzerdefinierten Bereich, der durch Festlegung des Kippschalters im Gehäuse (Abbildung C) ausgewählt wird. Mit den Schaltern 2, 3 und 4 wird der Bereich festgelegt. Um den gewünschten Bereich festzulegen, lösen Sie die Schrauben, entfernen die Abdeckung und stellen den Kippschalter gemäß der folgenden Tabelle ein:

Auswählbare Bereiche	**Kippschalter**		
	2	3	4
40 bis 90 °F (4,4 bis 32,2 °C)	AUS	AUS	AUS
-20 bis 140 °F (-28,9 bis 60 °C)	EIN	AUS	AUS
0 bis 100 °F (-17,8 bis 37,8 °C)	AUS	EIN	AUS
30 bis 240 °F (-1,1 bis 115,6 °C)	EIN	EIN	AUS
32 bis 212 °F (0 bis 100 °C)	AUS	AUS	EIN
32 bis 122 °F (0 bis 50 °C)	EIN	AUS	EIN
-30 bis 65 °F (-1,1 bis 18,3 °C)	AUS	EIN	EIN
Benutzerdefiniert	EIN	EIN	EIN

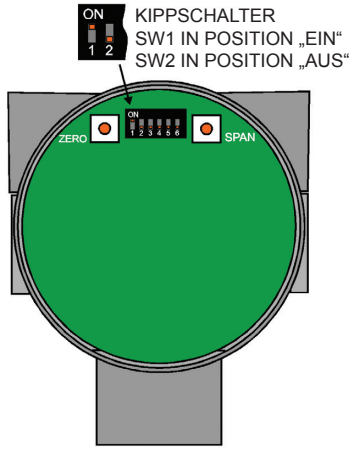

Abbildung C

Einstellung und Kalibrierung des benutzerdefinierten Bereichs
Durch Aktivierung von SCHALTER 2, 3 und 4 kann der RTD-Sender auf einen benutzerdefinierten Bereich eingestellt werden. Der Bereich kann Werte zwischen -30 °F und +250 °F (-34 bis +121 °C) mit einem MINDESTBEREICH von 40 °F (22 °C) liegen.

Erforderliche Geräte
Um das Gerät auf einen benutzerdefinierten Bereich einzustellen, ist ein RTD-Präzisionssimulator, der einen 1000 OHM DIN-RTD oder Präzisionswiderstandsdekade simulieren kann, erforderlich. Das Gerät muss den korrekten RTD-Widerstand auf 0,1 % oder besser erzeugen können.

Kalibrierungsverfahren
1. KIPPSCHALTER 2, 3 und 4 auf EIN stellen.
2. Entfernen Sie die RTD-Sensorkabel von den Klemmen 5 und 6 (Abbildung B). Schließen Sie den RTD-Präzisionssimulator oder Widerstandsdekade an die Klemmen 5 und 6 an.
3. Verkabeln Sie das Instrument wie bereits erwähnt. Ein Stromzähler kann mit dem Gerät in Reihe verkabelt werden, um die korrekte Stromausgabe zu überprüfen, dies ist allerdings für die Kalibrierung nicht erforderlich. Schließen Sie das Gerät an den Strom an.
4. Wird ein RTD-Präzisionssimulator verwenden, müssen Sie sicherstellen, dass er auf die Simulation eines 1000 OHM DIN 0,00385 RTD eingestellt ist. Legen Sie danach die gewünschte Mindesttemperatur fest. Wird eine Widerstandsdekade verwendet, siehe in der Tabelle in Anhang A (°F) oder Anhang B (°C) und stellen Sie ihn auf den Widerstand, der die gewünschte Mindesttemperatur darstellt.
5. Drücken Sie auf den Schalter ZERO (NULL). Hat das Gerät einen optionalen LCD-Bildschirm, ist auf ihm kurz ZERO OK (NULL OK) zu sehen. Ist ein Stromzähler angeschlossen, zeigt er 4,00 mA an.
6. Wiederholen Sie Schritt 4 mit dem Wert für die gewünschte Höchsttemperatur.
7. Drücken Sie die Taste SPAN (SPANNE). Hat das Gerät einen optionalen LCD-Bildschirm, ist auf ihm kurz SPAN (SPANNE) zu sehen. Ist ein Stromzähler angeschlossen, zeigt er 20,00 mA an.
8. Schalten Sie das Gerät aus. Trennen Sie den RTD-Simulator oder Widerstandsdekade und schließen Sie den RTD-Sensor wieder an die Klemmen 5 und 6 an. Die Kalibrierung ist abgeschlossen.

Hinweis: Das Kalibrierungsverfahren hat keinen Einfluss auf die Kalibrierung der anderen eingebauten Bereiche.

Auswahl von °F und °C
Hat das Gerät einen optionalen LCD-Bildschirm, legt der KIPPSCHALTER 1 die Anzeige in °F oder °C fest. SCHALTER 1 „AUS“ = °F
SCHALTER 1 „EIN“ = °C

Anzeige des Ausgabestroms
Hat das Gerät einen optionalen LCD-Bildschirm, zeigt der untere Teil den Ausgabestrom, wenn der KIPPSCHALTER 5 „AN“ ist. Ist die Einstellung für KIPPSCHALTER 5 „AUS“, bleibt der untere Bildschirm leer.

Offener RTD-Schutz
Nach Erkennung eines offenen RTD, kann das Gerät so eingestellt werden, dass die Ausgabe 3,5 mA oder 21 mA je nach Einstellung von KIPPSCHALTER 6 anzeigt.
SCHALTER 6 „AUS“, Ausgabe muss 3,5 mA sein
SCHALTER 6 „EIN“, Ausgabe muss 21 mA sein

Kalibrierung
Das Gerät muss nicht kalibriert werden. Ein interner Präzisionswiderstand führt eine Selbstkalibrierung des Geräts durch. Die Kalibrierung kann überprüft werden, indem die Sensorkabel entfernt und das Gerät mit einem RTD-Präzisionssimulator oder einer Widerstandsdekade geprüft wird. Stellt sich heraus, dass das Gerät kalibriert ist, muss es zur Wartung an den Hersteller geschickt werden.

ELEKTRISCHE ANSCHLÜSSE
Verbinden Sie die Kabel entsprechend den örtlichen Regularien. Bei Geräten mit interner Erdungsschraube und externer Verbindungsschraube muss die innere Erdungsschraube zur Erdung des Signales verwendet werden. Die externe Verbindungsschraube dient zur zusätzlichen Erdung, falls von örtlichen Regularien erlaubt oder erfordert. Ist ein externer Verbindungsleiter erforderlich, muss der Leiter mindestens 180° um die externe Verbindungsschraube gewickelt sein. Siehe unten.

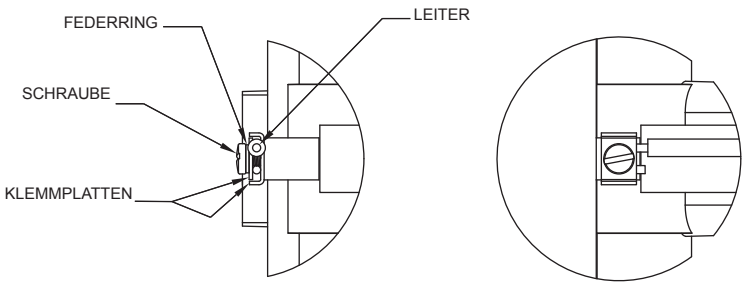

ANSICHT VON UNTEN DETAIL

VORDERANSICHT DETAIL

EU-Zertifizierung, IECEx-Installationsanweisungen:
Kabelanschluss
Das Kabeleingangsgerät muss in der Kategorie "Explosionsschutz" als feuersicheres Gehäuse der Klasse “db” zugelassen sein, für die Einsatzbedingungen geeignet sein und korrekt installiert werden. Bei ta ≥ 70 °C sind Kabel und Kabelverschraubungen für ≥ 75° C (MIN.) zu verwenden.

Gehäuseverschraubung
Am elektrischen Eingang des Sendergehäuses ist umgehend eine Dichtungsvorrichtung mit Ex-db-Zertifizierung wie beispielsweise ein Kabelschutzrohr mit Justierung anzubringen. Bei ta ≥ 70 °C muss das Kabelmaterial in der Durchgangsdichtung mindestens bis ≥ 75 °C geeignet sein.

Nicht verwendete Eingänge müssen mit einem Stopfen mit Ex-Zertifizierung, der für die passende Zone, Gerätegruppe und Temperaturklassifizierung geeignet ist, versiegelt und gemäß der Herstelleranleitung montiert werden.

Hinweis: Nur für ATEX-/IECEx-Geräte: Bei der Anwendung in einer Zone 1, EPL Gb (db), wird die Temperaturklasse entweder durch die max. Umgebungstemperatur oder durch die Prozesstemperatur bestimmt. Die Geräte sind für eine Umgebungstemperatur von -20 °C ≤ Tamb ≤ 70 °C bestimmt. Die Instrumente können bis zu einer Prozesstemperatur von 120 °C eingesetzt werden, vorausgesetzt das Gehäuse erreicht keine Temperaturen über 70 °C. Die Standardtemperaturklasse T6 ist bei einer Prozesstemperatur von ≤80 °C. Die verbleibenden Temperaturklassen sind Temperaturklasse T5 Prozesstemp ≤95 °C und Temperaturklasse T4 Prozesstemp ≤ 120 °C. Siehe Zertifikatnr: Element IECEx EMT17.0007X zu Informationen zum sicheren Umgang mit IECEx-Geräten. Alle Verdrahtungen und Gehäuse müssen den entsprechenden Regularien für explosionsgefährdete Umgebungen entsprechen. Die Gehäuse müssen ordnungsgemäß abgedichtet werden. Bei Außenanwendungen oder anderen Anwendungen, bei denen die Temperaturen stark schwanken, müssen Vorkehrungen zur Vermeidung von Kondensation innerhalb des Gehäuses getroffen werden. Alle elektrischen Komponenten sind vor Feuchtigkeit zu schützen.

Bei der Anwendung in einer Zone 20, EPL Da (ta), muss das Gerät mit einer Stromquelle verwendet werden, die für einen prospektiven Kurzschlussstrom von 10 kA zugelassen ist. Ist die Stromquelle für einen prospektiven Kurzschlussstrom von weniger als 10 kA zugelassen, muss der Endbenutzer oder Monteur das Gerät mit der prospektiven Kurzschlussstromklassifizierung der Stromquelle kennzeichnen, mit der es in Verbindung steht.

VORSICHT: Zur Vermeidung von Bränden in explosionsgefährdeten Umgebungen unterbrechen Sie die Spannungsversorgung, bevor Sie den Durchflusswächter öffnen. Halten Sie das Gerät beim Arbeiten immer geschlossen.

Wartung
Reinigen und kontrollieren Sie die mediumberührenden Teile in regelmäßigen Abständen. Die Abdeckung muss immer verschlossen sein, um die internen Teile vor Schmutz, Staub und Wettereinflüssen zu schützen. Lösen Sie immer die Spannungsversorgung, bevor Sie den Schalter öffnen, um Arbeiten an der Elektrik vorzunehmen. Reparaturen müssen von Dwyer instruments Inc durchgeführt werden (Feldreparaturen dürfen nicht durchgeführt werden und können die Garantie nichtig machen).

⚠ WARNUNG Reparaturen elektrischer Verbindungen, Prozessverbindungen und feuersicherer Gelenke sind verboten, um die sichere Verwendung des Produkts sicherzustellen.

Zu reparierende Geräte sollten im Voraus bezahlt ans Werk geschickt werden. Fügen Sie außerdem eine kurze Erläuterung des Problems sowie relevante Anmerkungen bei. Bevor Sie das Produkt einschicken, holen Sie sich bitte beim Kundendienst eine Warenrücksendenummer.

ANHANG A - RTD-Tabelle, ˚F Plt 1000 DIN 0,00385
Werte in Ohm

TEMP, °F	-0	-1	-2	-3	-4	-5	-6	-7	-8	-9
-30	864,7									
-20	886,6	884,4	882,2	880,0	877,8	875,6	873,5	871,3	869,1	866,9
-10	908,5	906,3	904,1	901,9	899,7	897,6	895,4	893,2	891,0	888,8
0	930,3	928,2	926,0	923,8	921,6	919,4	917,2	915,0	912,9	910,7
TEMP, °F	**0**	**1**	**2**	**3**	**4**	**5**	**6**	**7**	**8**	**9**
0	930,3	932,5	934,7	936,9	939,1	941,2	943,4	945,6	947,8	950,0
10	952,1	954,3	956,5	958,7	960,9	963,0	965,2	967,4	969,6	971,7
20	973,9	976,1	978,3	980,4	982,6	984,8	987,0	989,1	991,3	993,5
30	995,7	997,8	1000,0	1002,2	1004,3	1006,5	1008,7	1010,9	1013,0	1015,2
40	1017,4	1019,5	1021,7	1023,9	1026,0	1028,2	1030,4	1032,5	1034,7	1036,9
50	1039,0	1041,2	1043,4	1045,5	1047,7	1049,9	1052,0	1054,2	1056,3	1058,5
60	1060,7	1062,8	1065,0	1067,1	1069,3	1071,5	1073,6	1075,8	1077,9	1080,1
70	1082,3	1984,4	1086,6	1088,7	1090,9	1093,0	1095,2	1097,4	1099,5	1101,6
80	1103,8	1106,0	1108,1	1110,3	1112,4	1114,6	1116,7	1118,9	1121,0	1123,2
90	1125,3	1127,5	1129,6	1131,8	1133,9	1136,1	1138,2	1040,4	1142,5	1144,7
TEMP, °F	**0**	**1**	**2**	**3**	**4**	**5**	**6**	**7**	**8**	**9**
100	1146,8	1149,0	1151,1	1153,3	1155,4	1157,6	1159,7	1161,8	1164,0	1166,1
110	1168,3	1170,4	1172,6	1174,7	1176,9	1179,0	1181,1	1183,3	1185,4	1187,6
120	1189,7	1191,8	1194,0	1196,1	1198,3	1200,4	1202,5	1204,7	1207,0	1208,9
130	1211,1	1213,2	1215,4	1217,5	1219,6	1221,8	1223,9	1226,0	1228,2	1230,3
140	1232,4	1234,6	1236,7	1238,8	1241,0	1243,1	1245,2	1247,3	1249,5	1251,6
150	1253,7	1255,9	1258,0	1260,1	1262,2	1264,4	1266,5	1268,6	1270,8	1272,9
160	1275,0	1277,1	1279,3	1281,4	1283,5	1285,6	1287,8	1289,9	1292,0	1294,1
170	1296,2	1298,4	1300,5	1302,6	1304,7	1306,9	1309,0	1311,1	1313,2	1315,3
180	1317,5	1319,6	1321,7	1323,8	1325,9	1328,0	1330,2	1332,3	1334,4	1336,5
190	1338,6	1340,7	1342,8	1345,0	1325,9	1349,2	1351,3	1353,4	1355,5	1357,6
TEMP, °F	**0**	**1**	**2**	**3**	**4**	**5**	**6**	**7**	**8**	**9**
200,0	1359,7	1361,9	1364,0	1366,1	1368,2	1370,3	1372,4	1374,5	1376,6	1378,7
210,0	1380,8	1383,0	1385,1	1387,2	1389,3	1391,4	1393,5	1395,6	1397,7	1399,8
220,0	1401,9	1404,0	1406,1	1408,2	1410,3	1412,4	1414,5	1416,6	1418,7	1420,8
230,0	1422,9	1425,0	1427,1	1429,2	1431,3	1433,4	1435,5	1437,6	1439,7	1441,8
240,0	1443,9	1446,0	1448,1	1450,2	1452,3	1454,4	1456,5	1458,6	1460,7	1462,8
250,0	1464,9									

ANHANG B - RTD-Tabelle, ˚C Plt 1000 DIN 0,00385
Werte in Ohm

TEMP, °C	-0	-1	-2	-3	-4	-5	-6	-7	-8	-9
-30	888,2	878,3	874,3	870,4	866,4					
-20	921,6	917,7	913,7	909,8	905,9	901,9	898,0	894,0	890,1	886,2
-10	960,9	956,9	953,0	949,1	945,2	941,2	937,3	933,4	929,5	925,5
0	1000,0	996,1	992,2	988,3	984,4	980,4	976,5	972,6	968,7	964,8
TEMP, °C	**0**	**1**	**2**	**3**	**4**	**5**	**6**	**7**	**8**	**9**
0	1000,0	1003,9	1007,8	1011,7	1015,6	1019,5	1023,4	1027,3	1031,2	1035,1
10	1039,0	1042,9	1046,8	1050,7	1054,6	1058,5	1062,4	1066,3	1070,2	1074,1
20	1077,9	1081,8	1085,7	1089,6	1093,5	1097,4	1101,2	1105,1	1109,0	1112,9
30	1116,7	1120,6	1124,5	1128,3	1132,2	1136,1	1140,0	1143,8	1147,7	1151,5
40	1155,4	1159,3	1163,1	1167,0	1170,9	1174,7	1178,6	1182,4	1186,3	1190,1
50	1194,0	1197,8	1201,7	1205,5	1209,4	1213,2	1217,1	1220,9	1224,7	1228,6
60	1232,4	1236,3	1240,1	1243,9	1247,8	1251,6	1255,4	1259,3	1263,1	1266,9
70	1270,8	1274,6	1278,4	1243,9	1286,1	1289,9	1293,7	1297,5	1301,3	1305,2
80	1309,0	1312,8	1316,6	1320,4	1324,2	1328,0	1331,8	1335,7	1339,5	1343,3
90	1347,1	1350,9	1354,7	1358,5	1362,3	1366,1	1369,9	1373,7	1377,5	1381,3
TEMP, °C	**0**	**1**	**2**	**3**	**4**	**5**	**6**	**7**	**8**	**9**
100	1385,1	1388,9	1392,6	1396,4	1400,2	1404,0	1407,8	1411,6	1415,4	1419,1
110	1422,9	1426,7	1430,5	1434,3	1438,0	1441,8	1445,6	1449,4	1453,1	1456,9
120	1460,7	1464,5								

DWYER INSTRUMENTS, INC.
P.O. BOX 373 • MICHIGAN CITY, INDIANA 46360, USA
Tel.: +1 - 219/879-8000 dwyer-inst.com
Fax: +1 - 219/872-9057 E-Mail: info@dwyermail.com

Transmisor de temperatura a prueba de explosión RTD Series TTE

Especificaciones - Instrucciones de instalación y uso



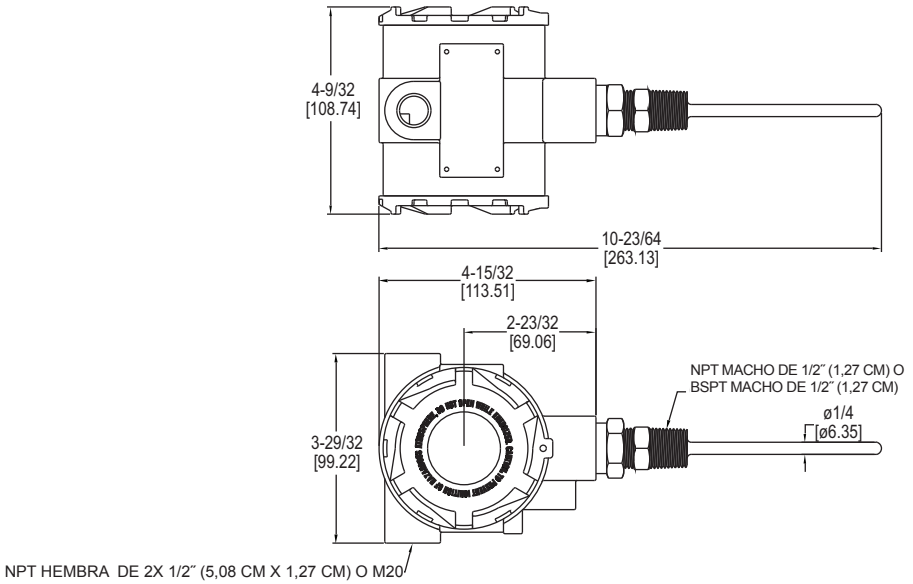

El transmisor de temperatura a prueba de explosión RTD **Series TTE** es el producto ideal para aplicaciones peligrosas de medición de temperatura. Las series TTE tienen rangos de temperatura preprogramados que se seleccionan mediante un interruptor DIP interno. Para aquellas aplicaciones que necesitan un rango personalizado, el transmisor puede configurarse fácilmente para cualquier rango de entre -30 y 250 °F (-34,4 °C y 121 °C) con una amplitud mínima de 40 °F (4,44 °C). La amplitud y el cero pueden ajustarse rápidamente con solo pulsar un botón. Esta unidad tiene listados opcionales de FM para usar en clase I, división 1, grupos B, C y D, clase II, división 1, grupos E, F y G y atmósferas clase III o ATEX (directiva 2014/34/EU) para CE Ex II 2 G Ex db IIC T6...T4 Gb (-20°C ≤ Ta ≤ + 70°C), CE Ex II 1 D Ex ta IIIC T111 °C Da (-20°C ≤ Ta ≤ + 70°C) y IECEx para Ex db IIC T6...T4 Gb (-20°C ≤ Ta ≤ + 70°C), Ex ta IIIC T111 °C Da (-20°C ≤ Ta ≤ + 70°C). La carcasa compacta permite montar el transmisor virtualmente en cualquier aplicación.

Las series TTE son adecuadas para refrigeración, automatización edilicia, calentadores y calderas comerciales, y aplicaciones de enfriamiento de agua.

TABLA DE MODELOS

Ejemplo:	**TTE**	**1**	**04**	**W**	**LCD**	**Transmisor de temperatura RTD a prueba de explosiones, con aprobación FM, sondas de 4″ (10,16 cm), con pantalla**
Series	TTE					Transmisor de temperatura a prueba de explosión RTD Series TTE
Agencia		1 2				FM* ATEX/IECEx ignífugo
Longitud de sonda			02 04 06 09 12 15 18			sonda de 2″ (5,08 cm) sonda de 4″ (10,16 cm) sonda de 6″ (15,24 cm) sonda de 9″ (22,86 cm) sonda de 12″ (30,48 cm) sonda de 15″ (38,10 cm) sonda de 18″ (45,72 cm)
Construcción				W		Probeta de pozo
Opciones					Vacía BSPT C5 LCD M20	No hay visualización en la LCD Proceso de conexión 1/2 macho BSPT Especificación de pintura de la carcasa C5-M Pantalla LCD Conexión eléctrica hembra de filamentos M20

*Opciones que no tienen ATEX ni IECEx.

Atención: Las unidades sin el sufijo “2” después de “TTE” no cumplen la directiva 2014/34/EU (ATEX). Estas unidades no están indicadas para usarse en atmósferas potencialmente peligrosas en la UE. Estas unidades pueden tener el marcado CE para otras Directivas de la UE.

ESPECIFICACIONES TÉCNICAS

Sensor de temperatura: Pt1000, 0.00385 DIN.
Rangos de temperatura de salida: A elegir por el usuario – Cualquier rango entre -30 y 250 °F (-34,4 y 121 °C) con una amplitud mínima de 40 °F (4,4 °C).
Límites de temperatura: Ambiente: -4 a 158 °F (-20 a 70 °C); proceso: -30 a 250 °F (-34,4 a 120 °C).
Precisión: Transmisor ±0,1 % FS; Sonda ±0,3 % FS.
Efectos de deriva térmica: ±0,02 %/°C máx..
Tiempo de respuesta: 250 ms
Materiales mojados: Acero inoxidable 316.
Conexión del proceso: NPT macho de 1/2″ (1,27 cm) o BSPT macho de 1/2″ (1,27 cm)
Conexión de conductos: NPT hembra de 1/2″ (1,27 cm) o M20.
Longitud de sonda: De 2″ (5,08 cm) a 18″ (45,72 cm), según el modelo.
Límites de presión: 2000 PSI.
Requisitos eléctricos: De 10 a 35 V CC.
Señal de salida: 4-20 mA (alimentado por un circuito de dos hilos).
Pantalla opcional: LCD de 2 lineas X 8 caracteres.
Clasificación de la carcasa: Resistente a la intemperie y a prueba de explosiones: Listado con FM para clase I, división 1, grupos B, C y D, y a prueba de polvo y de ignición para clase II, división 1, grupos E, F y G, y atmósferas de clase III.
Certificado ATEX: CE 0518 Ex II 2 G Ex db IIC T6...T4 Gb, CE Ex II 1 D Ex ta IIIC T111°C Da, T6 temp. del proceso ≤80 °C, clase de temperatura T5 temp. del proceso ≤95 °C, clase de temperaturaT4 temp. del proceso ≤120 °C como se indica en la placa.
Certificado tipo UE n.º: EMT17ATEX0021 X.
Normativas ATEX: EN 60079-0:2012+A11:2013; EN 60079-1:2015; EN 60079-31:2014.
Certificación IECEx: Para Ex db IIC T6...T4 Gb, Ex ta IIIC T111°C Da, T6 temp. del proceso ≤80 °C, clase de temperatura T5 temp del proceso ≤95 °C, clase de temperatura T4 temp. del proceso ≤120 °C tal como se indica en la placa.
Certificado de cumplimiento IECEx: Elemento IECEx EMT 17.0007X; normativas IECEx: IEC 60079-0:2011 (Edición 6); IEC 60079-1:2014 (Edición 7); IEC 60079-31:2013 (Edición 2).
Peso: 2 lb 8 oz (1134 g).
Aprobaciones de agencias: FM, CE, ATEX/IECEx.

DWYER INSTRUMENTS, INC.
P.O. BOX 373 • MICHIGAN CITY, INDIANA 46360, U.S.A.
Teléfono: +1 219/879-8000 **dwyer-inst.com**
Fax: +1 219/872-9057 **Correo electrónico: info@dwyermail.com**

INSTALACIÓN

1. **Ubicación:** Seleccione una ubicación en la que la temperatura del transmisor esté entre -4 y 158 °F (-20 y 70 °C). la distancia del receptor solo está limitada por la resistencia de bucle total.
2. **Posición:** el transmisor no es sensible a las posiciones. Las unidades con pantalla opcional deben montarse de forma que tenga una visualización fácil.
3. **Conexión eléctrica: Longitud del cable** - La longitud máxima del cable que conecta el transmisor y el receptor va en función del tamaño del cable y de la resistencia del receptor. El cableado no debe contribuir en más del 10 % de la resistencia del receptor a la resistencia de bucle total. Para distancias extremadamente largas (más de 1000 pies [304 m]), elija receptores con resistencia más baja para minimizar el tamaño y el coste de los cables de conexión.

Funcionamiento de corriente de salida (4-20 mA)

Se necesita una fuente de energía externa. Vea en la figura A el diagrama de conexión de la fuente de energía, el transmisor y el receptor. El rango de resistencia de carga del receptor (RL) para el voltaje de alimentación de CC disponible se expresa mediante la siguiente fórmula:

$$R_L = \frac{V_{ps} - 10}{20\ mA\ CC}$$

Para controlar el cableado de bucle se recomienda un cable apantallado.

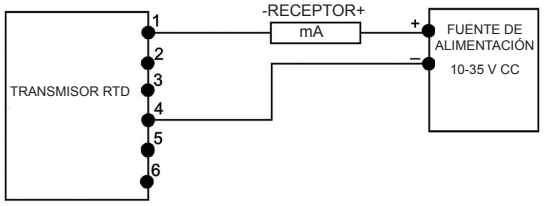

Figura A

Notas de instalación FM a prueba de explosiones:

1. Instalar según el código eléctrico nacional de aplicación.
2. Tapar las aperturas de canalización sin utilizar. Al tapar se deben incluir un mínimo de 5 hilos.
3. Utilizar un sello de canalización a 18 pulgadas de la entrada de canalización.
4. Desconectar la alimentación antes de la reparación.

Las conexiones eléctricas al transmisor RTD se hacen a un bloque terminal ubicado dentro de la carcasa. Desatornillar y retirar la cubierta. Cablear como se muestra en la figura B.

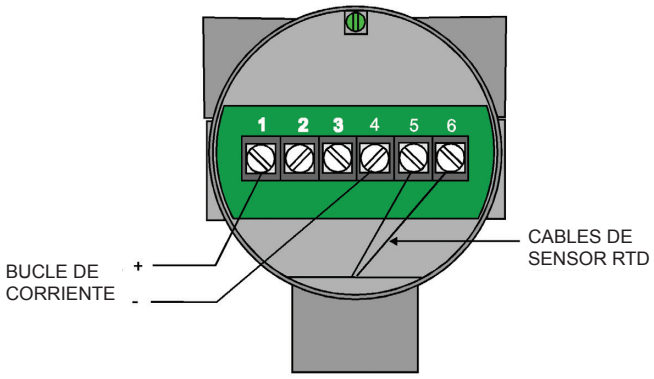

Figura B

Selección del rango de temperatura

El transmisor RTD tiene 7 rangos de temperatura incluidos y un rango configurable por el usuario que se pueden seleccionar ajustando el interruptor DIP ubicado dentro de la carcasa (figura C). Los interruptores 2, 3 y 4 se utilizan para ajustar el rango. Para ajustar al rango deseado, desatornille y retire la cubierta y ajuste el interruptor DIP según la siguiente tabla:

	Interruptor DIP		
Rangos seleccionables	2	3	4
DE 40 a 90 °F (de 4,4 a 32,2 °C)	APAGADO	APAGADO	APAGADO
De -20 a 140 °F (de -28,9 a 60 °C).	ENCENDIDO	APAGADO	APAGADO
De 0 a 100 °F (de -17,8 a 37,8 °C)	APAGADO	ENCENDIDO	APAGADO
De 30 a 240 °F (de -1,1 a 115,6 °C)	ENCENDIDO	ENCENDIDO	APAGADO
De 32 a 212 °F (de 0 a 100 °C)	APAGADO	APAGADO	ENCENDIDO
De 32 a 122 °F (de 0 a 50 °C)	ENCENDIDO	APAGADO	ENCENDIDO
De -30 a 65 °F (de -1,1 a 18,3 °C)	APAGADO	ENCENDIDO	ENCENDIDO
Configurable por el usuario	ENCENDIDO	ENCENDIDO	ENCENDIDO

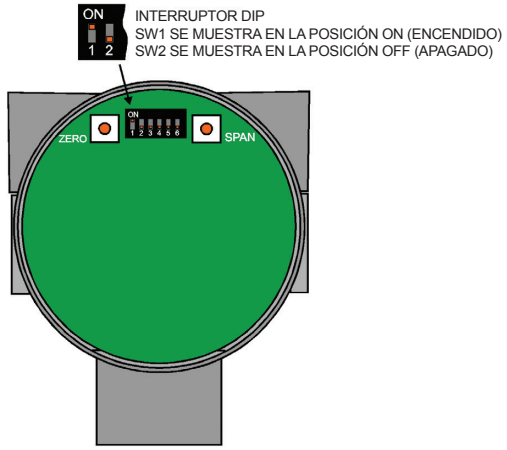

Figura C

Ajustar y calibrar el rango ajustable por el usuario
Ajustando los INTERRUPTORES 2, 3 y 4, el transmisor RTD puede ajustarse al rango específico personalizado por el usuario. El rango puede estar entre los valores –30 °F y +250 °F (de -34 a +121 °C) con una AMPLITUD MÍNIMA de 40 °F (22 °C).

Equipo necesario
Para calibrar la unidad a un rango personalizado, se necesita un estimulador RTD que pueda estimular una RTD de 1000 OHM tipo DIN o una caja de década de precisión. El dispositivo debe ser capaz de generar la resistencia RTD hasta un 0,1 % o mejor.

Procedimiento de calibración
1. Ajuste los interruptores DIP 2, 3 y 4 a ON (ENCENDIDO).
2. Retire los cables del sensor RTD desde las terminales 5 y 6 (figura B). Conecte el simulador RTD de precisión o la caja de década a los terminales 5 y 6.
3. Cablee el instrumento como se indicó anteriormente. Puede instalarse un medidor de corriente en serie con la unidad para comprobar la salida de corriente correcta, pero no es necesario para la calibración. Conecte la unidad a la fuente de alimentación.
4. Si se utiliza un simulador RTD, asegúrese de que está ajustado para simular una RTD de 1000 OHM DIN 0,00385. Luego, ajústelo a la temperatura mínima deseada. Si se usa una caja de década, consulte la tabla en el apéndice A (°F) o en el apéndice B (°C) y ajústela a la resistencia que represente la temperatura mínima deseada.
5. Presione el botón ZERO (CERO). Si la unidad tiene la LCD opcional, mostrará ZERO OK (CERO CORRECTO) de forma momentánea. Si hay un medidor de corriente conectado, marcará 4,00 mA.
6. Repita el paso 4 utilizando el valor de la temperatura máxima deseada.
7. Presione el botón SPAN (AMPLITUD). Si la unidad tiene la LCD opcional, mostrará SPAN (AMPLITUD CORRECTA) de forma momentánea. Si hay un medidor de corriente conectado, marcará 20,00 mA.
8. Apague la unidad. Desconecte el simulador RTD o una caja de década y reconecte el sensor RTD a las terminales 5 y 6. Se ha terminado la calibración.

Nota: el procedimiento de calibración no afecta la calibración de ninguno de los rangos incorporados.

Selección de °F y °C
Si la unidad tiene una pantalla LCD opcional, el INTERRUPTOR DIP 1 ajusta la pantalla para que de la lectura en °F o °C. INTERRUPTOR 1 “OFF” (APAGADO) = °F
INTERRUPTOR 1 “ON” (ENCENDIDO) = °C.

Pantalla de corriente de salida
Si la unidad tiene una pantalla LCD opcional, la pantalla más baja mostrará la corriente de salida si el INTERRUPTOR DIP 5 esté “ON”. Si el INTERRUPTOR DIP 5 está “OFF”, la pantalla más baja estará vacía.

Protección RTD abierta
Al detectar una RTD abierta, la unidad debe ajustarse para forzar a que en la salida se indique 3,5 mA o 21 mA en base al ajuste del INTERRUPTOR DIP 6.
INTERRUPTOR 6 “OFF”, salida forzada a 3,5 mA
INTERRUPTOR 6 “ON”, salida forzada a 21 mA

Calibración
La unidad no necesita calibración. Un resistor de precisión interno autocalibra la unidad continuamente. Puede comprobarse la calibración retirando las sondas y probando la unidad frente al simulador de precisión RTD o una caja de década de precisión. Si la unidad se encuentra sin calibrar, debe devolverse a la fábrica para su reparación.

CONEXIONES ELÉCTRICAS
Conecte los cables conductores de acuerdo con los códigos eléctricos locales. Para los equipos que se suministren con tomas de tierra interna y externa, el tornillo de tierra del interior de la caja debe usarse para conectar el control a tierra. El tornillo de conexión externo es para realizar una conexión adicional cuando sea permitido o requerido por las normas locales. Si es necesario usar el conductor a tierra externo, el conductor deberá anudarse al menos 180° alrededor del tornillo de conexión exterior. Ver a continuación.

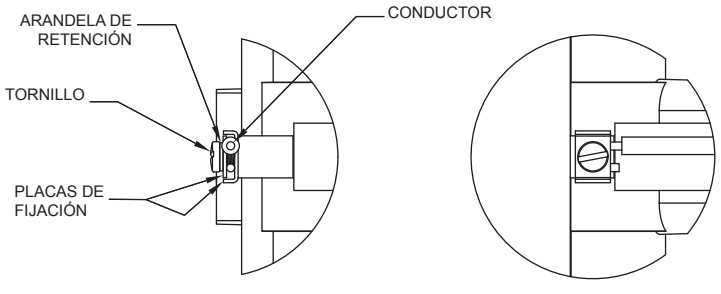

DETALLE DE LA VISTA INFERIOR

DETALLE DE LA VISTA FRONTAL

Instrucciones de instalación del certificado tipo EC e, IECEx:
Conexión del cable
El dispositivo de entrada de cable debe tener certificación para carcasa resistente al fuego con protección contra explosiones tipo “db”, adecuada para las condiciones de uso e instalada correctamente. Si la ta es ≥ 70 °C , debe utilizar se un cable y un prensacables aprobado para temperaturas ≥ 75 °C (MÍN.).

Conexión de conductos
Inmediatamente después de la entrada a la carcasa eléctrica debe utilizarse un dispositivo de sellado con la certificación Ex d, como un sello de conductos con un compuesto endurecedor adecuado para las condiciones de uso y correctamente instalado. Si la temperatura ambiente es ≥ 70 °C, se deben utilizar un cableado y un compuesto endurecedor en el sello de conductos certificados para ≥ 75 °C.

Las entradas no utilizadas deben sellarse con un dispositivo obturador con certificación Ex calificado para la zona apropiada, clasificación de temperatura y del grupo del equipo, y debe instalarse según las instrucciones del fabricante.

Note: solo para equipos ATEX/IECEx: Cuando se emplean en la zona 1, aplicación EPL Gb (db), la clase de temperatura se determina por la temperatura de ambiente máxima o de proceso. Las unidades están hechas para usarse en ambientes de -20 °C≤ temp. amb. ≤70 °C. Las unidades pueden usarse en temperaturas de proceso de hasta 120 °C siempre que la temperatura de la carcasa no supere los 70 °C. La clase de temperatura estándar es T6, temp. de proceso ≤80 °C. Las clases de temperatura restantes son: clase de temperatura T5, temp. del proceso ≤95 °C y clase de temperatura T4, temp. del proceso ≤ 120 °C. Consulte el certificado n.º: Elemento IECEx EMT17.0007X para conocer las condiciones de uso seguro de las unidades conforme a IECEx. Todos los cables, conductos y cajas deben cumplir los códigos vigentes para áreas peligrosas. Los conductos y las cajas deben estar adecuadamente sellados. Para exteriores o para otros lugares en los que las temperaturas varíen ampliamente, se deben tomar las precauciones necesarias para evitar la condensación en el interior del interruptor o de la caja. Los componentes eléctricos se deben mantener secos en todo momento.

Cuando se emplea en la zona 20, aplicación EPL Da (ta), el equipo se utilizará con una fuente de alimentación calificada para una corriente prevista de cortocircuito de 10 kA. Si la fuente de alimentación se califica para una corriente prevista de cortocircuito de 10 kA, el usuario final o el instalador debe marcar al equipo con la calificación de corriente prevista de cortocircuito de la fuente de alimentación con la que se utiliza.

PRECAUCIÓN: Para evitar incendios en atmósferas peligrosas, desconecte el dispositivo del circuito de la fuente de alimentación antes de abrirlo. Mantenga el conjunto herméticamente cerrado cuando esté en uso.

Mantenimiento
Inspeccione y limpie las piezas mojadas a intervalos regulares. La tapa debe estar colocada en todo momento, a fin de proteger los componentes internos de la suciedad, el polvo, el clima, y para mantener las clasificaciones para ubicaciones peligrosas. Desconecte el dispositivo del circuito de la fuente antes de abrirlo para evitar el encendido de atmósfera peligrosa. Las reparaciones las realizará Dwyer Instruments, Inc (no deben intentarse las reparaciones en campo y pueden anular la garantía).

⚠ ADVERTENCIA Están prohibidos las reparaciones de las conexiones eléctricas, la conexión del proceso y las juntas antideflagrantes para hacer un uso seguro del producto.

Las unidades que necesiten reparación deberán enviarse a fábrica con portes prepagados. Asegúrese de incluir una breve descripción del problema además de cualquier nota relevante sobre la aplicación. Póngase en contacto con el servicio de atención al cliente para obtener un número de autorización de devolución de productos para el envío.

Apéndice A - RTD Tabla, ˚F Plt 1000 DIN 0.00385
Los valores son en ohmios.

TEMP, °F	-0	-1	-2	-3	-4	-5	-6	-7	-8	-9
-30	864,7									
-20	886,6	884,4	882,2	880,0	877,8	875,6	873,5	871,3	869,1	866,9
-10	908,5	906,3	904,1	901,9	899,7	897,6	895,4	893,2	891,0	888,8
0	930,3	928,2	926,0	923,8	921,6	919,4	917,2	915,0	912,9	910,7
TEMP, °F	**0**	**1**	**2**	**3**	**4**	**5**	**6**	**7**	**8**	**9**
0	930,3	932,5	934,7	936,9	939,1	941,2	943,4	945,6	947,8	950,0
10	952,1	954,3	956,5	958,7	960,9	963,0	965,2	967,4	969,6	971,7
20	973,9	976,1	978,3	980,4	982,6	984,8	987,0	989,1	991,3	993,5
30	995,7	997,8	1000,0	1002,2	1004,3	1006,5	1008,7	1010,9	1013,0	1015,2
40	1017,4	1019,5	1021,7	1023,9	1026,0	1028,2	1030,4	1032,5	1034,7	1036,9
50	1039,0	1041,2	1043,4	1045,5	1047,7	1049,9	1052,0	1054,2	1056,3	1058,5
60	1060,7	1062,8	1065,0	1067,1	1069,3	1071,5	1073,6	1075,8	1077,9	1080,1
70	1082,3	1984,4	1086,6	1088,7	1090,9	1093,0	1095,2	1097,4	1099,5	1101,6
80	1103,8	1106,0	1108,1	1110,3	1112,4	1114,6	1116,7	1118,9	1121,0	1123,2
90	1125,3	1127,5	1129,6	1131,8	1133,9	1136,1	1138,2	1040,4	1142,5	1144,7
TEMP, °F	**0**	**1**	**2**	**3**	**4**	**5**	**6**	**7**	**8**	**9**
100	1146,8	1149,0	1151,1	1153,3	1155,4	1157,6	1159,7	1161,8	1164,0	1166,1
110	1168,3	1170,4	1172,6	1174,7	1176,9	1179,0	1181,1	1183,3	1185,4	1187,6
120	1189,7	1191,8	1194,0	1196,1	1198,3	1200,4	1202,5	1204,7	1207,0	1208,9
130	1211,1	1213,2	1215,4	1217,5	1219,6	1221,8	1223,9	1226,0	1228,2	1230,3
140	1232,4	1234,6	1236,7	1238,8	1241,0	1243,1	1245,2	1247,3	1249,5	1251,6
150	1253,7	1255,9	1258,0	1260,1	1262,2	1264,4	1266,5	1268,6	1270,8	1272,9
160	1275,0	1277,1	1279,3	1281,4	1283,5	1285,6	1287,8	1289,9	1292,0	1294,1
170	1296,2	1298,4	1300,5	1302,6	1304,7	1306,9	1309,0	1311,1	1313,2	1315,3
180	1317,5	1319,6	1321,7	1323,8	1325,9	1328,0	1330,2	1332,3	1334,4	1336,5
190	1338,6	1340,7	1342,8	1345,0	1325,9	1349,2	1351,3	1353,4	1355,5	1357,6
TEMP, °F	**0**	**1**	**2**	**3**	**4**	**5**	**6**	**7**	**8**	**9**
200,0	1359,7	1361,9	1364,0	1366,1	1368,2	1370,3	1372,4	1374,5	1376,6	1378,7
210,0	1380,8	1383,0	1385,1	1387,2	1389,3	1391,4	1393,5	1395,6	1397,7	1399,8
220,0	1401,9	1404,0	1406,1	1408,2	1410,3	1412,4	1414,5	1416,6	1418,7	1420,8
230,0	1422,9	1425,0	1427,1	1429,2	1431,3	1433,4	1435,5	1437,6	1439,7	1441,8
240,0	1443,9	1446,0	1448,1	1450,2	1452,3	1454,4	1456,5	1458,6	1460,7	1462,8
250,0	1464,9									

Apéndice B - Tabla RTD, ˚C Plt 1000 DIN 0.00385
Los valores son en ohmios.

TEMP. °C	-0	-1	-2	-3	-4	-5	-6	-7	-8	-9
-30	888,2	878,3	874,3	870,4	866,4					
-20	921,6	917,7	913,7	909,8	905,9	901,9	898,0	894,0	890,1	886,2
-10	960,9	956,9	953,0	949,1	945,2	941,2	937,3	933,4	929,5	925,5
0	1000,0	996,1	992,2	988,3	984,4	980,4	976,5	972,6	968,7	964,8
TEMP. °C	**0**	**1**	**2**	**3**	**4**	**5**	**6**	**7**	**8**	**9**
0	1000,0	1003,9	1007,8	1011,7	1015,6	1019,5	1023,4	1027,3	1031,2	1035,1
10	1039,0	1042,9	1046,8	1050,7	1054,6	1058,5	1062,4	1066,3	1070,2	1074,1
20	1077,9	1081,8	1085,7	1089,6	1093,5	1097,4	1101,2	1105,1	1109,0	1112,9
30	1116,7	1120,6	1124,5	1128,3	1132,2	1136,1	1140,0	1143,8	1147,7	1151,5
40	1155,4	1159,3	1163,1	1167,0	1170,9	1174,7	1178,6	1182,4	1186,3	1190,1
50	1194,0	1197,8	1201,7	1205,5	1209,4	1213,2	1217,1	1220,9	1224,7	1228,6
60	1232,4	1236,3	1240,1	1243,9	1247,8	1251,6	1255,4	1259,3	1263,1	1266,9
70	1270,8	1274,6	1278,4	1243,9	1286,1	1289,9	1293,7	1297,5	1301,3	1305,2
80	1309,0	1312,8	1316,6	1320,4	1324,2	1328,0	1331,8	1335,7	1339,5	1343,3
90	1347,1	1350,9	1354,7	1358,5	1362,3	1366,1	1369,9	1373,7	1377,5	1381,3
TEMP. °C	**0**	**1**	**2**	**3**	**4**	**5**	**6**	**7**	**8**	**9**
100	1385,1	1388,9	1392,6	1396,4	1400,2	1404,0	1407,8	1411,6	1415,4	1419,1
110	1422,9	1426,7	1430,5	1434,3	1438,0	1441,8	1445,6	1449,4	1453,1	1456,9
120	1460,7	1464,5								

©Copyright 2018 Dwyer Instruments, Inc.
Printed in U.S.A. 4/18
FR# 443554-10

DWYER INSTRUMENTS, INC,
P.O. BOX 373 • MICHIGAN CITY, INDIANA 46360, U.S.A.
Teléfono: +1 219/879-8000 **dwyer-inst.com**
Fax: +1 219/872-9057 **Correo electrónico: info@dwyermail.com**

AUTROL® America
SMART TRANSMITTERS

APT3100

SMART PRESSURE TRANSMITTER

For Differential/Gauge/Absolute/High Pressure Measurement



Application Areas:

- *Nuclear*
- *Water & Wastewater*
- *Chemicals*
- *Petrochemical*
- *Oil & Gas*
- *Pulp & Paper*
- *Food & Beverage,*
- *Pharmaceutical*
- *Power*
- *Renewable Energy*
- *Alternate Fuel*



Autrol America Inc,
10 N. Martingale Rd, Suite 400.
Schaumburg, IL 60173. United States
T: 847-779-5000
F: 847-655-6062
Email: info@autroltransmitters.com,

www.autroltransmitters.com

HART COMMUNICATION PROTOCOL · FOUNDATION · CE · Ex · FM APPROVED · CSA · PG · Kepic · NEP

SMART PRESSURE TRANSMITTER

"Autrol America Inc. (AAI) range of transmitters includes a complete range of "intelligent" high performance transmitters for Temperature, Gauge, Absolute, Vacuum & Differential pressure measurements for standalone monitoring and/or closed loop control applications. These "intelligent" microprocessor-based "Smart" transmitters features a two-wire loop powered 4 to 20mA current outputs with "Digital" HART as standard (Foundation Fieldbus optional) communication(s) for seamless integration with a host control system such as DCS, PLC, SCADA, AMS, PDM and/or a local Hand Held Communicator(HHC)."

Description of Product

The APT3100 series of smart transmitters have excellent stability, high accuracy and include features that facilitate easy installation, start up and minimum maintenance thereby lowering process downtime and overall cost of ownership in the long run.

Autrol transmitters are equipments with analog (4/20mA- 2 wire) and digital (HART or Foundation Fieldbus) communication protocols for seamless integration with a host Control System such as DCS, PLC, SCADA, AMS, PDM and/or Hand Held Communicator (HHC). Through Digital HART Protocol one can easily acquire process measured variable, configure and modify its various Parameters (Range, Tag Name and Damping, Transfer Function, Trimming).

These transmitters are equipped with an automatic temperature compensation function integrated into its advanced signal processing circuitry to ensure high reliability and performance corresponding to change of ambient temperature.



Features

- Superior Performance
- High Reference Accuracy :+/-0.075% of Calibrated Span
- Long-Term Stability
- High Rangeability (100 : 1)
- Flexibility
- Data Configuration with HART Configurator
- Zero Point Adjustment
- Reliability
- Continuous Self-Diagnostic Function
- Automatic Ambient Temperature Compensation
- Fail-mode Process Function
- EEPROM Write Protection
- CE EMC Conformity Standards(EN5081-2, EN50082-2)

Function

- Flexible Sensor Input : DP, GP, AP, Vacuum
- Various Output : 4 ~20mA , Digital Signals
- Setting Various Parameters : Zero/Span,
- Trim, Unit, Fail-mode, etc
- Self Diagnostic Function : Sensor, Memory
- A/D Converter, Power, etc
- Digital Communication with HART protocol
- Explosion-proof Approval & Intrinsic Safety Approval : KOSHA, KTL, CSA,FM, ATEX

www.autroltransmitters.com

TRUE SMART

The heart of Autrol smart transmitter is a microprocessor-based high performance module. In addition, each transmitter is ambient temperature characterized using state-of-art technologies to ensure maximum transmitter accuracy and minimized drift over a wide range of operating temperatures.

On integrated sensor models such as in APT3100 series transmitters the characteristics data of its sensor are stored in internal non-volatile EEPROM to minimize measuring error. On non sensor transmitter models such as ATT2100 temperature transmitters, it has a linearization table built in wherein user can modify the various necessary values in field per the added temperature sensor (RTD or T/C) characteristics to get better accuracy from the overall measurement system. Its integral microprocessor module then automatically converts the required value referring to the customized linearization table.

All transmitters include advanced self diagnostic functions for detecting any malfunctions of sensor and/or fault of A/D converter, internal memory and microprocessor. All diagnostic/error status is transmitted to a connected Master by analog current signal (fail mode current 3.75mA or 22mA) or digital HART (or FF) communication.

The transmitters have Last Value Status (L V S) function for safety of instrumentation. When the sensor input occurs in abnormal status, output is fixed to the previous value and when the recovery to normal status, output is updated to the current value. If abnormal status of sensor is being continued during the defined interval, the fault is recognized as a sensor failure & reported accordingly for corrective action.

OPEN ARCHITECTURE

Using a Device Master (AMS, PMD etc) or a hand-held terminal, PC configuration program or HART Compatible DCS, PLC or SCADA the user can change, modify and review parameters of smart transmitter through HART communication. There functions provide convenience for your calibration and maintenance practice.

FIELD PROGRAMMABLE

All Autrol transmitter have a fully programmable front panel from which users can directly input values (e.g. range, zero/span, sensor type, thermocouples, RTD and mV and automatic temperature compensation) to reduce cost of installation and commissioning eliminating need of a additional configuration tools.

Stable Measurable Accurate Reliable Transmitters

For application support, quotations, pricing and lead times please contact our sales department directly at sales@autroltransmitters.com. Additional details including product technical specifications can be found online at www.autroltransmitters.com

Electronics Module

The Electronics module consists of a circuit board sealed in an enclosure. There is a MCU module, a power module, an analog module, a LCD module and a terminal module included within the transmitter.All circuit boards are tropicalised suitable for hot and humid, and damp and cold climates.
The MCU modules acquire the digital value from the analog module and apply correction coefficients selected from EEPROM. The output section of the power module converts the digital signal to a 4~20 mA output. The MCU module communicates with the HART-based Configurator or Control Systems such as DCS. The Power modules have a DC-to-DC Power conversion circuit and an Input/output isolation circuit. An optional LCD module plugs into the MCU module and displays the digital output in user-configured unit.

Sensor Inputs

The model APT3100-D, G, H is available in a differential pressure sensor of a capacitance type.
The capacitance pressure sensor measures differential and gauge pressure and is commonly used in flow and level applications. Both sides in the capacitance sensor transmit process pressure from the process isolators to the sensor.

The model APT3100-A is available in an absolute pressure sensor of a piezo-resistive type and measures absolute pressure.

The sensor module converts the capacitance or the resistance to the digital value. The MCU module calculates the process pressure based on the digital value.

The sensor modules include the following features

- +/-0.075%accuracy, the most accurate sensor in the industry.
- The software of the transmitter compensates for the thermal effects, improving performance.
- Precise Input Compensation during operation is achieved with temperature and pressure correction coefficients that are characterized over the range the transmitter and stored in the sensor module EEPROM memory.
- EEPROM stores sensor information and correction coefficients separately from MCU module, allowing for easy repair, reconfiguration and replacement

Basic Setup

ATP3100 Pressure transmitter can be easily configured from any host that supports the HART protocol.

- Operational Parameters
- Operational Parameters.
- 4~20mA Points (Zero/Span)
- Engineering Units
- Damping Time: 0.25 ~ 60 sec
- Tag: 8 alphanumeric characters
- Descriptor: 16 characters
- Message: 32 characters.
- Date: day/month/year

Calibration and Trimming

- Lower/Upper Range (zero/span)
- Sensor Zero Trimming
- Zero Point Adjustment
- DAC Output Trimming
- Transfer Function
- Self-Compensation

Self-Diagnosis and Others

- CPU & Analog Module Fault Detection
- Communication Error
- Fail-mode Handling
- LCD Indication
- Temperature Measurement of Sensor Module

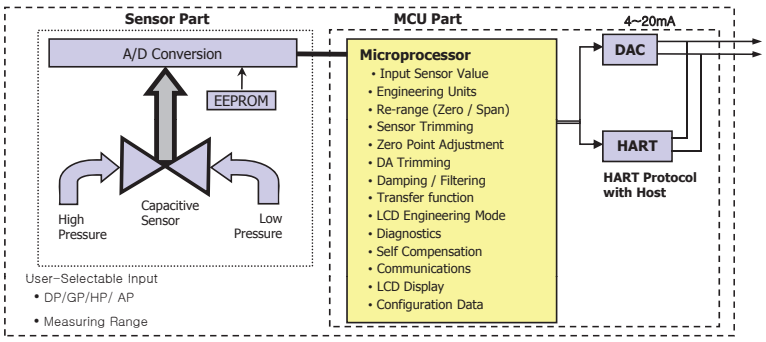

www.autroltransmitters.com

Range and Sensor Limits
Refer to Table 1

Zero and Span Adjustment Limits
- Zero and span values can be set anywhere within the range limits stated in Table 1.
- Span must be greater than or equal to the minimum span stated in Table 1

Output (Analog Current and Digital Data)
- Two wire 4~20mA user-configurable for linear or square root output, digital process value superimposed on 4~20mA signal, available to any host that conforms to the HART protocol

Power Supply & Load Requirement •
- **External power supply required**
  Transmitters operate on 11.9 to 45 V dc.
  * 250 ohm load-- 17.4 Vdc
  * Up to a 550 ohm load -- 24 Vdc
  Max. Loop Resistance = (E - 11.9)/0.022
  (E = Power Supply Voltage)
- **Supply Voltage**
  11.9 ~ 45 Vdc -- operation
  17.4 ~ 45 Vdc -- HART Communications
  11.9 ~ 42 Vdc -- CSA Approval
- **Loop Load**
  0 ~ 1500 ohm – Operation
  250 ~ 550 ohm -- HART Communications

EMC Conformity Standards
- EMI (Emission) – EN50081-2:1993
- EMS (Immunity) – EN50082-2:1995

Update Time and Turn-On Time Update
- Time : 0.12 seconds
- Turn-On Time : 3 seconds

Failure Mode
- Fail High : Current ≥ 21.75 mA
- Fail Low : Current ≤ 3.75 mA

Storage Temperature -40℃ to 85℃ (without condensing)

Process Temperature Limits
- (Range codes and approval codes may affect limits)
- -40℃ to 120℃ (-40 to 248 ℉)

Isolation
- Input/output isolated to 500Vrms (707 Vdc)

Working Pressure Limits (silicone oil)

Model DP & GP	0 ~ 13.79 MPa ----------	# 3 ~ 8
Model GP	0 ~ 80.00 MPa ----------	# 9
	0 ~ 80.00 MPa ----------	# 0
Model HP	0 ~ 3 1.02 MPa ----------	# 4 ~ 7
Model AP	0 ~ 700 KPa ----------	# 4
	0 ~ 4000 KPa ----------	# 5
	0 ~ 7000 KPa ----------	# 6

Hydrostatic Test Pressure

Model DP	3000 psi (20.7 MPa)	
Model HP	6750 psi (46.5 MPa)	
Model GP	2000 psi (13.8 MPa)	-- # 3 ~ 8
	11600 psi (80.0 MPa)	--- # 9
	11600 psi (80.0 MPa)	--- # 0
Model AP	101.5 psi (700 KPa)	--- # 4
	580 psi (4000 KPa)	--- # 5
	1015 psi (7000 KPa)	--- # 6

Burst Pressure

Model DP, GP & HP	10000 psi (68.9MPa)
Model AP	2000 psi (13.8MPa)

5 Digits LCD
- Expresses all pressure unit and flow unit in 5 digits.
- Select decimal place (0 to 4)









www.autroltransmitters.com

Physical Specifications

Wetted Materials

- Isolating Diaphragms ----316L SST, Monel, Tantalum, HAST-C
- Drain/Vent Valves --------316 SST, HAST-C
- Flanges and Adapters----316 SST, HAST-C
- O-ring ----------Viton, PTFE)

Non-wetted materials

- Fill Fluid ----------Silicone oil or Inert fill
- Bolts ----------Stainless Steel
- Electronics Housing -----Aluminum, Flameproof and Waterproof (IP67)
- Cover O-ring ----------Buna-N
- Paint ----------Epoxy-Polyester or Polyurethane
- Mounting Bracket --------2-inch Pipe, 304 SST, Painted
- Carbon Steel with 304 SST U-bolt
- Nameplate ----------304 SST

Electrical connections

- 1/2-14 NPT conduit with M4 Screw Terminals

Process Connections

- 1/4-18 NPT on 2.126 inch (54.0 mm) centers on flanges for Standard
- 1/2-14 NPT on Process Adapter (option) *Refer to drawing in the last page*

Weight

- 3.9 kg (excluding options)

Hazardous Location Certifications (option)

CSA (Canadian Standards Association) Approvals
C1 Code:
"SEAL NOT REQUIRED"
Explosion proof for Class I, Division 1, Groups A, B, C & D
Dust-ignition proof for Class II, Division 1, Groups E, F & G; Class III
Flameproof for Class I, Zone 1: Ex d IIC
"T6, See Instruction for temperature code if process temperature above 85 °C"
Class I, Division 2, Groups A, B, C, and D;
Class II, Division 2, Groups E, F, G;
Class IIIT4
Non sparking Equipment for Class I Zone 2: Ex nA IIC T4
Enclosure: Type 4x, IP66
Power Supply: 11.9 to 42 Vdc Max.
Output Signal: 4 to 20 mA + HART
Ambient Temp. : -20 to 60 °C

KOSHA Approvals (KOSHA: Korea Occupational Safety & Health Agency)
K1 Code:
Flameproof for Class I, Zone 1: Ex d ⅡC T6, IP67
Ambient Temperature: -20 to 60 °C
Max. Process Temperature: 80 °C
Power Supply: Max. 45 Vdc
Output: 4 to 20 mA + HART, Max. 22 mA

KTL Certification (KTL: Korea Testing Laboratory)
K2 Code:
Intrinsic Safety: Ex ia IIC T5
Ambient Temperature: -20 to 60 °C
Max. Process Temperature: Max. 100 °C
Entity Parameter: Umax=40Vdc, IMAX=165mA, Pmax = 0.9W

FM (Factory Mutual explosion proof) Approvals
F1 Code:
Explosion proof for Class I, Division 1 Groups A, B, C and D
Dust-ignition proof for Class II, Division 1, Groups E, F and G
Dust-ignition proof for Class II, Division 1
"T6, see instruction for temperature code if process temperature above 85°C"
Ambient Temperature: -20 to 60°C
Enclosure: indoors and outdoors, NEMA Type 4X
Conduit seal required within 18" for Group A only.
Nonincendive for Class I, Division 2, Groups A, B, C & D
Class II, Division 2, Groups E, F & G; and Class III, Division 1,
Temperature Code T4
Ambient Temperature: -20 to 60°C
Enclosure: indoors and outdoors, NEMA Type 4X

ATEX Approvals
E1 Code:
ATEX Certificate number: KEMA07ATEX0103
CE0344 Ⓔx II 2 G Ex d IIC T6 or T5

Operating Temperature: -20°C ≤ Tamb ≤ +60°C
T6 for process < 85°C; T5 for process < 100°C

www.autroltransmitters.com

General Specifications

(Rangeability: #2=20:1 / #3=50:1 / 4~0=100:1)

1)APT3100 Pressure Sensor Range & URL

Range Code	DP/GP/HP					AP	
	Calibrated Span (KPa)	Upper Range (URL) (KPa)	Lower Range (LRL) (KPa)			Calibrated Span (KPa)	Range (KPa)
			D.P	G.P	H.P		
2	0.075~1.5	1.5	-1.5	-1.5	NA	NA	NA
3	0.15~7.5	7.5	-7.5	-7.5	NA	NA	NA
4	0.373~37.3	37.3	-37.3	-37.3	-37.3	2~250	0~250
5	1.865~186.5	186.5	-186.5	-100	-186.5	10~1500	0~1500
6	6.9~690	690	-690	-100	-690	20~2500	0~2500
7	20.68~2068	2068	-2068	-100	-2068	NA	NA
8	68.95~6895	6895	-6895	-100	NA	NA	NA
9	206.8~20680	20680	NA	-100	NA	NA	NA
0	413.7~41370	41370	NA	-100	NA	NA	NA

Range Code	KPa	Kg/cm^2	bar	psi	inH_2O@4°C	mmH_2O@4°C	inHg@0°C
2	1.5	0.015	0.015	0.217	6	152	0.442
3	7.5	0.076	0.075	1.087	30	765	2.215
4	37.3	0.38	0.373	5.410	149	3804	11.014
5	186.5	1.902	1.865	27.049	749	19018	55.072
6	690	7.036	6.900	100.073	2773	70361	203.750
7	2068	21.088	20.680	299.930	8310	210878	610.660
8	6895	70.309	68.950	1000.009	27708	703097	2036.025
9	20680	210.876	206.800	2999.303	83105	2108781	6106.597
0	41370	421.856	413.700	6000.211	166085	4218566	12216.550

2)Electrical Specifications

Power Supply	11.9 ~ 45 Vdc	Output Signal	4 ~ 20 mA dc/HART
HART loop resistance	250 ~ 550 ohm	Isolation	500 ms (707 Vdc)

3)Performance Specifications

Reference Supply	± 0.075% of Span (0.1URL≤Span ≤URL) ±[0.025+0.005x(URL/Span)]% of Span (0.01URL≤Span<0.1URL)	Ambient Temperature	-40 ~ +85 ℃
		LCD Meter Ambient Temp.	-30 ~ +80 ℃
		Humidity Limits	5% ~ 100% RH
Ambient Temp. Effect	±[0.019%URL+0.125% Span] / 28 ℃	Process Temperature Limits	-40℃ ~ +120 ℃
Stability	±0.125% URL for 12 Months	Power Supply Effects	±0.005% of Span per Volt
Static Pressure Effects	±0.1% of URL per 7MPa (Zero Error) ±0.2% of Reading per 7Mpa (Span Error)	Mounting Position Effects	Zero Shift up to 350Pa No Span Effect

4)Physical Specifications

Isolating Diaphragm	316L SST	Process Connection Size	1/4 - 18 NPT
Drain & Vent Valve	316 SST	(Adapter – Option)	1/2 – 14 NPT
Flange & Adapter	316 SST	Electrical Connections	1/2 – 14 NPT with M4
O-ring	Viton, PTFE	Weight (excluding Option Items)	3.9 Kg
Electronic Housing	Aluminum	2” Pipe Stanchion Type bracket	Angle or Flat type
Bolts & Bolting Flange	304 SST	Housing Class	Waterproof (IP67), 4X, IP66

5)Hazardous Location Certifications (option)

Korea Standards Approval	Overseas Standards Approval
Flameproof Approval : Ex d IIC T6 (KOSHA) Intrinsic Safety Approval : Ex ia IIC T5 (KTL)	CSA Explosion proof Approval FM Explosion proof Approval ATEX Flame proof Approval

www.autroltransmitters.com

ORDERING INFORMATION

APT3100 SERIES -SMART PRESSURE TRANSMITTERS						D	F	H	G	A
APT3100-D	Differential Pressure Transmitters (Static Pressure 13.79 MPa / 2000psi)					Y	-	-	-	-
APT3100-F	Flow Transmitters (w/pulse output, For General Purpose Area use only)					-	Y	-	-	-
APT3100-H	Differential Pressure Transmitters for High Line Pressure (Static Pressure 31.02MPa / 4500psi)					-	-	Y	-	-
APT3100-G	Gauge Pressure Transmitters					-	-	-	Y	-
APT3100-A	Absolute Pressure Transmitters					-	-	-	-	Y
RANGE	M SPAN (URL-LRL) SETTINGS ALLOWED									
CODE	APT3100-D	APT3100-F	APT3100-H	APT3100-G	APT3100-A					
2	0.30 to 6 inH2O	0.30 to 6 inH2O	NA	0 to 6 inH2O	NA	Y	Y	-	Y	-
3	0.6 to 30 inH2O	0.6 to 30 inH2O	NA	0.6 to 30 inH2O	NA	Y	Y	-	Y	-
4	1.5 to 150 inH2O	1.5 to 150 inH2O	1.5 to 150 inH2O	1.5 to 150 inH2O	10 to 1000 inH20	Y	Y	Y	Y	Y
5	7.5 to 750 inH2O	7.5 to 750 inH2O	7.5 to 750 inH2O	7.5 to 750 inH2O	1.5 to 217 psiA	Y	Y	Y	Y	Y
6	1 to 100 psi	1 to 100 psi	1 to 100 psi	1 to 100 psi	3 to 362 psiA	Y	Y	Y	Y	Y
7	3 to 300 psi	3 to 300 psi	3 to 300 psi	3 to 300 psi	NA	Y	Y	Y	Y	-
8	10 to 1000 psi	10 to 1000 psi	CF	10 to 1000 psi	NA	Y	Y	-	Y	-
9	CF	CF	CF	30 to 3000 psi	NA	-	-	-	Y	-
0	CF	CF	CF	60 to 6000psi	NA	-	-	-	Y	-
XX	Special	Special	Special	Special	Special	CF	CF	CF	CF	CF
	MOUNTING - FLANGE SIZE/MATERIAL									
	FLANGE/ADAPTERS	DRAIN/VENT	DIAPHRAGM							
M11	316SST	316SST	316LSST			Y	Y	Y	Y	Y
M12	316SST	316SST	Hast-C			Y	Y	Y	Y	CF
M13	316SST	316SST	Monel			Y	Y	Y	Y	CF
M14	316SST	316SST	Tantalum			Y	Y	Y	Y	CF
M21	Hast-C	Hast-C	Hast-C			CF	CF	CF	CF	CF
M22	Hast-C	Hast-C	Monel			CF	CF	CF	CF	CF
M23	Hast-C	Hast-C	Tantalum			CF	CF	CF	CF	CF
XX	Special					CF	CF	CF	CF	CF
	HAZARDOUS LOCATION CERTIFICATIONS									
K0	General Purpose (IP67/ NEMA4X)					Y	Y	Y	Y	Y
K1	KOSHA Flameproof Approval : Ex d IIC T6					Y	Y	Y	Y	Y
K2	KTL Intrinsic Safety Approval : Exia IIC					Y	Y	Y	Y	Y
E1	ATE- (KEMA) Flameproof Ex d IIC T6 or T5					Y	Y	Y	Y	Y
E2	ATE- (KEMA) Intrinsic Safety (pending)					CF	CF	CF	CF	CF
F1	FM/FMC Explosion proof (for USA & Canada) Class I/II/III , Division 1/2 , Group A-D/E-G					Y	Y	Y	Y	Y
F2	FM Intrinsic Safety (pending)					CF	CF	CF	CF	CF
	FILL FLUID									
1	Silicone DC200					Y	Y	Y	Y	Y
2	Inert fill Fluid (Halocarbon Oil)					CF	CF	CF	CF	CF
XX	Special					CF	CF	CF	CF	CF
	PROCESS CONNECTION									
S	1/4 - 18 NPT (Standard) *-For 1/2"NPTF use Option Code O below*					Y	Y	Y	Y	Y
O[5]	1/2 - 14 NPTF (Oval Flange Adapter)					Y	Y	Y	Y	Y
XX	special					CF	CF	CF	CF	CF
	ELECTRICAL CONNECTION									
1	1/2 - 14NPT	(Epoxy Coated-Aluminium)				Y	Y	Y	Y	Y
2	G1/2	(Epoxy Coated-Aluminium)				Y	Y	Y	Y	Y
NA	Special					CF	CF	CF	CF	CF
	OPTIONS									
M1	LCD Indicator					Y	Y	Y	Y	Y
LV[12]	Low Voltage 1-5v, 4 wire (FM pending)					CF	CF	CF	CF	CF
K	Oil Free Finish					Y	Y	Y	Y	Y
F1[6]	Side Vent/Drain Top	*(refer note below)*				Y	Y	Y	Y	Y
F2[6]	Side Vent/Drain Bottom	*(refer note below)*				Y	Y	Y	Y	Y
MP[7]	Multi - Planar	*(refer note below)*				Y	Y	Y	Y	Y
LP	Lighting Protector (Internal Type)					Y	Y	Y	Y	Y
2WR	2 Way Manifold (SST) Remote Type					-	-	-	Y	Y
2WF	2 Way Manifold (SST) Flange Type					-	-	-	Y	Y
3WR	3 Way Manifold (SST) Remote Type					Y	Y	Y	Y	Y
3WF	3 Way Manifold (SST) Flange Type					Y	Y	Y	Y	Y
5WR	5 Way Manifold (SST) Remote Type					Y	Y	Y	-	-
5WF	5 Way Manifold (SST) Flange Type					Y	Y	Y	-	-
BA	Stainless Steel Bracket (Angle type) with SST Bolts					Y	Y	Y	Y	Y
BF	Stainless Steel Bracket (Flat type) with SST Bolts					Y	Y	Y	Y	Y
BH	Stainless Steel Bracket (Angle type) with SST Bolts for Horizontal pipe mounting					Y	Y	Y	Y	Y
UBA[11]	Angle Bracket Shipped Loose, Box packed, includes bracket + U Bolt + Mounting Screws					Y	Y	Y	Y	Y
UBF[11]	Flat Bracket Shipped Loose, Box packed, includes bracket + U Bolt + Mounting Screws					Y	Y	Y	Y	Y
ST	Stainless Steel (SUS 316) Housing- w/ General Purpose approvals, FM pending					Y	Y	Y	Y	Y
TCB	Tropicalised Circuit Board					Y	Y	Y	Y	Y
T[8]	Teflon O-Ring (Wetted Part)					Y	Y	Y	Y	Y
EA[3]	Enhanced Accuracy of 0.04% accuracy	*(refer note below)*				Y	Y	Y	Y	Y
ABS	Certificate of Conformance for Marine Approvals					Y	Y	Y	Y	Y
NC	Certificate of Conformance to NACE MR0175: 2002					Y	Y	Y	Y	Y
MC	Positive Material Identification (PMI) Material Certificate					Y	Y	Y	Y	Y
FC	Factory Calibration to customer specified measurement range.(Standard Cal. is full published range code).					Y	Y	Y	Y	Y
TAG	SS Tag (Must specify unique Tag# on order)					Y	Y	Y	Y	Y
CPC#	Custom Product Code (Special Construction CPC #XXX)					CF	CF	CF	CF	CF
W-5(9)	Extended Warranty for total 5 years from Supply					Y	Y	Y	Y	Y
CDE[10]	Certified Drawing (electronic)					Y	Y	Y	Y	Y
CDP[10]	Certified Drawing (Printed)					Y	Y	Y	Y	Y
OM	Printed Operation and Maintainece Manuals-1 Set. (Standard Electronic copy, No cost)					Y	Y	Y	Y	Y
CC	Printed Calibration Certificate-1 Set. (Standard Electronic copy, No cost)					Y	Y	Y	Y	Y
D-C1(4)	APT3100 Diaphragm Seal Assemblies (Requires full model code refer DXC1 pricesheet)					* Refer D-C1 sheet for product coding				

www.autroltransmitters.com

ORDERING INFORMATION

1) "-" - Not Available for selected configuration
2) CF- Consult Factory . Minimum order quantities may apply.
3) 'EA'- Enhanced Accuracy of 0.04% caliberated span is available for below range codes only:
APT3100-D/F:3, 4, 5, 6
APT3100-G:3, 4, 5, 6
APT3200-G: 3, 4, 5
Turn Down ratio 100:1, 3 years stability.
4) DXC1- Requires full model code refer DXC1 sheet
5) Use ' O' for Oval Flange Adapter for 1/2" NPTF Process Connections
6) Use 'F1' & 'F2' quote only if "side" drain/vent is required. All APT3100 transmitters are shipped standard with "Rear" Drain/Vent
7) Use 'MP' option to select a direct replacement for the Coplaner style transmitters with vertical mount and bottom process connections
8) Use 'T' Teflon O-Ring for corrosive services. APT3100 transmitters are shipped standard with VITON O-Rings in contact with process.
9) Standard Warranty is two (2) years from supply
10) Information included on Certified Drawing will be:
Customer: PO Number, Customer Name :*, Project : (if applicable), MODEL /OPTION code: (model code being ordered), TAG or TAG(s) : if applicable*
Calibration Range : Shipped Cal Range
** Hence if ordering for specific end user/project please include this information else we will use default (PO #)*
11) Angle/Flat Bracket Shipped Loose, separate bo-(6-5-4), includes bracket + U Bolt + Mounting Screws for 3100&3200/2100
12) LV - 1-5V is currently available on on 3200G series and requires special HART modem (to be purchased directly) to be used with the STT20

Installation with mounting bracket

2” Pipe Mounting Bracket Model Angle Type

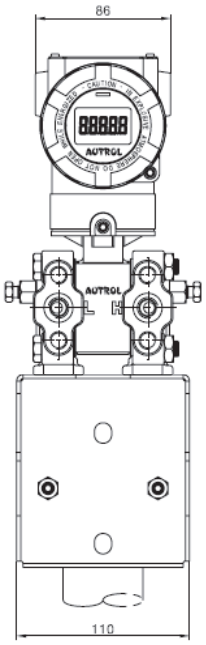

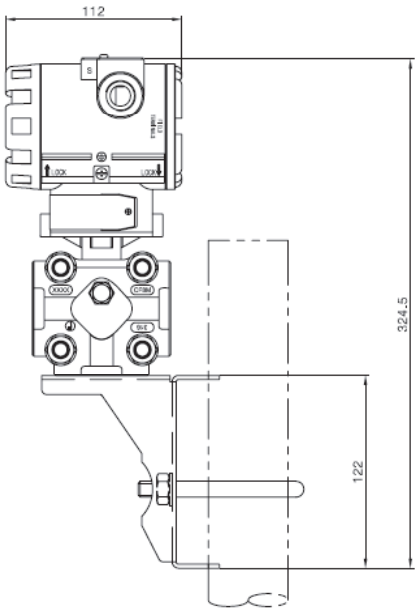

2” Pipe Mounting Bracket Model Flat Type

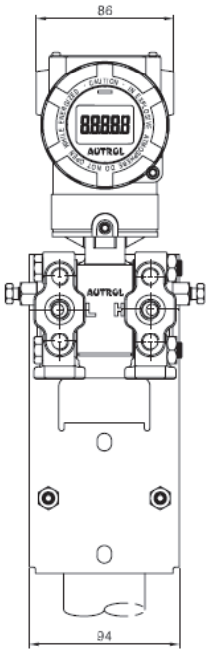

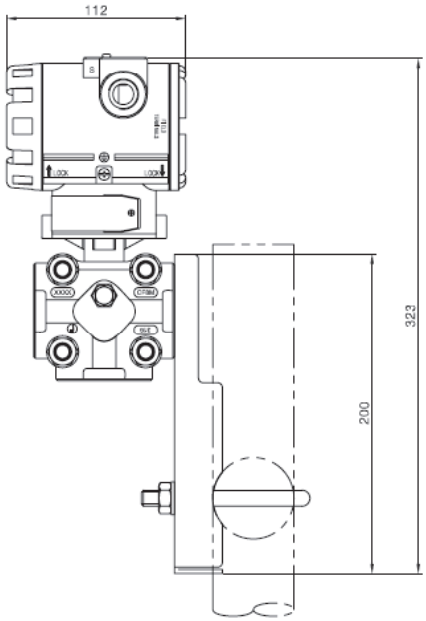

www.autroltransmitters.com

Connection Diagram of Signal, Power, HHT for Transmitter

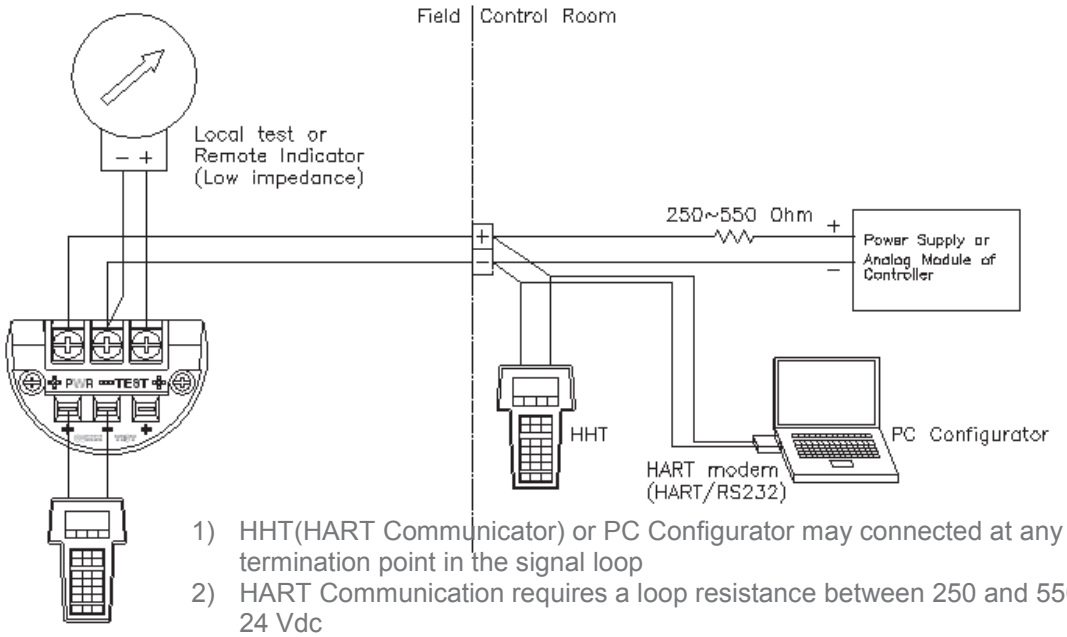

1) HHT(HART Communicator) or PC Configurator may connected at any termination point in the signal loop
2) HART Communication requires a loop resistance between 250 and 550 ohm @ 24 Vdc
3) Transmitter operates on 11.9 to 45.0 Vdc transmitter terminal voltage.
   [Applied Power]
   * 11.9 ~ 45.0 Vdc for General Operation
   * 17.4 ~ 45.0 Vdc for HART Communication
   * 17.4 ~ 42.0 Vdc for CSA Approval (Power supply must not exceed 42.0 Vdc)

Dimensions of Transmitter (mm)

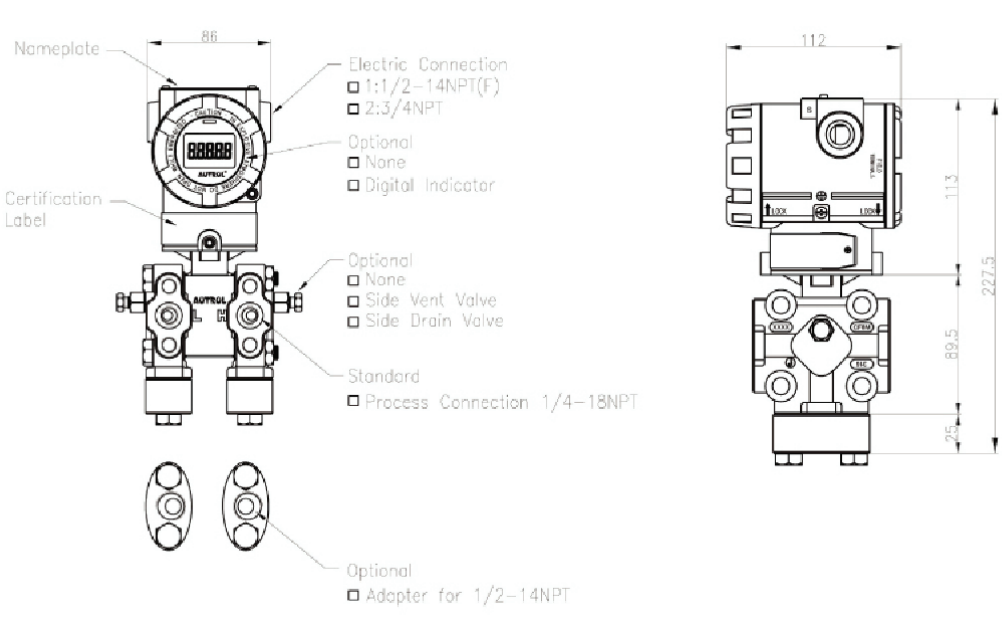

www.autroltransmitters.com

Autrol America Inc,
10 N. Martingale Rd, Suite 400. Schaumburg, IL 60173. United States
T: 847-779-5000 I F: 847-655-6062 I website: www.autroltransmitters.com
Email: info@autroltransmitters.com

EXPLOSION PROOF HIGH AND LOW LIMIT CONTROLS

HZLIM SERIES

DESCRIPTION

The **Kele HZLIM Series explosion proof high and low limit controls** are field-assembled combinations of industry standard controls, heavy duty explosion proof enclosures, and seals for use in atmospheres that may contain hazardous gases or dusts (Groups B, C, D, E, F).

The **HZLIM-LO-A** includes the ultra reliable A11A-1 manual reset low limit control, a **XJA7514C2M2M** explosion proof enclosure, two EYM-75 conduit seals, and an ACK6F fiber/cement kit.

The **HZLIM-LO-B** is identical to the **HZLIM-LO-A** but includes the equally reliable A11B-1 automatic reset low limit control instead of the A11A-1.

The **HZLIM-HI** is also identical to the **HZLIM-LO-A** but includes the time proven A70KA-1 manual reset high limit control in place of the A11A-1.



HZLIM Series

FEATURES

- ***Class I Division 1 Groups B, C, D***
- ***Class II Division 1 Groups E, F,G***
- ***NEMA 7BCD, 9EFG***
- ***Long life, snap acting contacts***
- ***Easy set point adjust***
- ***Freeze protection for hazardous locations***
- ***Code required AHU high limit protection for hazardous locations***

SPECIFICATIONS

Refer to the A70 and A11 Series in the Thermostats and Controllers section for specifications, capillary, installation and wiring information.

CAUTION: Conduit seal MUST be installed within code-required distance from junction box to maintain explosion proof rating. For Group B and C atmospheres, conduit seals must be installed within 2" (5.08 cm) of the enclosure regardless of less stringent code requirements.

WARNING: All circuits MUST be de-energized before opening the cover of this device for any purpose, including resetting a manual reset controller or adjusting a set point. If work must be performed with an energized circuit, the atmosphere inside and outside the enclosure must be proven safe with a listed intrinsically safe combustible gas detector.

DIMENSIONS

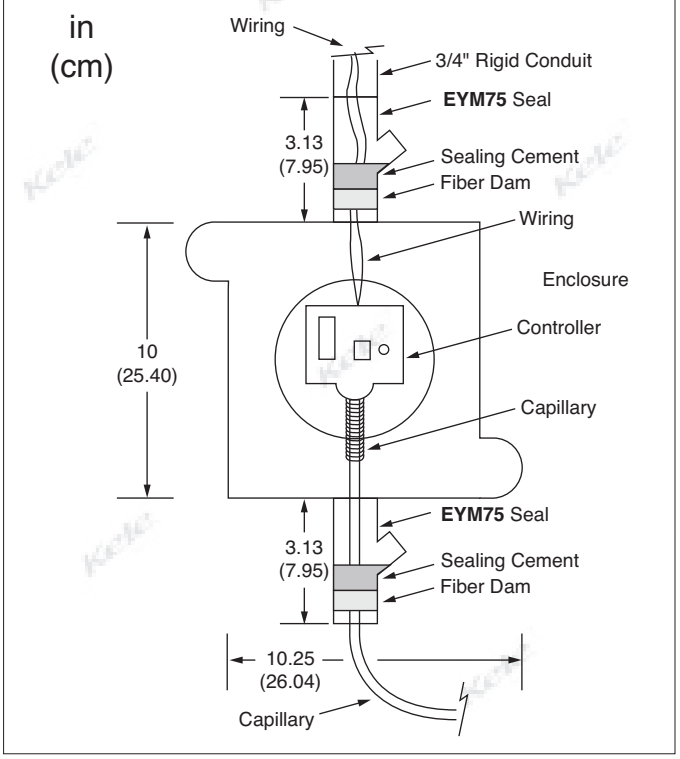

HAZARDOUS LOCATIONS

EXPLOSION PROOF HIGH AND LOW LIMIT CONTROLS

HZLIM SERIES

INSTALLATION / MOUNTING

OPERATION

Install the XJATS14C2M2N1 enclosure, included with each kit, in its intended location. Install the two EYM75 conduit seals in the two tapped holes of the XJATS14C2M2N1 enclosure, making sure to engage a minimum of five full threads. Also be sure that the plugs on the conduit seals are both facing up and to the front (cement will be poured into them later). The male nipple, supplied with fittings, can be easily removed and replaced in the opposite side for proper orientation.

Unpack the A11 or A70 controller, and fully uncoil the capillary tubing. Place plastic bushings in both openings inside the enclosure and also in the bottom of the lower conduit seal. Gently feed the end of the capillary (or capillary and bulb) through the bottom opening and conduit seal from inside the XJATS14C2M2N1 enclosure, taking care not to nick or kink the capillary. Once the end is out, slowly feed the rest of the capillary fully through to the outside of the conduit seal. Use an assistant, if needed, to make sure that the inner and outer plastic bushings stay in place to protect the capillary from damage. Once this is accomplished, mount the A11 or A70 controller to the panel inside the enclosure. Install the capillary (or capillary and bulb) on the equipment according to the included instructions. Install rigid conduit and wiring as required by code from the upper conduit seal, engaging a minimum of five full threads at each joint. Only individual insulated conductors may pass through the conduit seal. If jacketed cable is used, the jacket must be stripped back beyond the seal or else a listed cable seal must be applied within the enclosure. Remove the plugs from the two conduit seals. Make sure that the wires and capillary are centered in the seals. Then install fiber dams and sealing compound in each according to the included instructions (minimum 0.75"/2 cm cement depth), and replace the plugs. Adjust the setpoint on the controller, install the cover for the XJATS14C2M2N1 enclosure, and tighten securely.

ORDERING INFORMATION

MODEL	DESCRIPTION
HZLIM-HI	Kit with one A70KA-1 manual reset high limit control, one XJATS14C2M2N1 enclosure, two EYM75 conduit seals, three plastic conduit bushings, and one ACK6F sealing kit Weight: 26.9 lb (12.2 kg)
HZLIM-LO-A	Kit with one A11A-1 manual reset low limit control, one XJATS14C2M2N1 enclosure, two EYM75 conduit seals, three plastic conduit bushings, and one ACK6F sealing kit Weight: 25.7 lb (11.7 kg)
HZLIM-LO-B	Kit with one A11B-1 automatic reset low limit control, one XJATS14C2M2N1 enclosure, two EYM75 conduit seals, three plastic conduit bushings, and one ACK6F sealing kit Weight: 25.7 lb (11.7 kg)

RELATED PRODUCTS

ACK6F	Cement: 1.9 lb * (0.85kg) Fiber: 0.3 lb (0.19 kg), 25 cu in (410 cu cm) volume when set * Consists of five 0.4 lb (0.19 kkg) cement pouches
EYM-75	3/4" size, 1.19" turning radius, 2 oz Kwiko cement required, Malleable Iron construction

Code No. LIT-1901029
Issued September 2017

CSDSC Current Switch Devices

Description

The Current Switch Devices Self-Calibrating (CSDSC) Series of Current Switch Devices provide reliable verification of electrical equipment operation in a variety of applications, including fans and pumps. CSDSC current switch devices use a single-turn dial to select motor full load amps, eliminating the need for live calibration and significantly reducing installation time compared to traditional current switches.

CSDSC switches use full load amps instead of horsepower, eliminating the need for separate part numbers as a function of line voltage. CSDSC current switches are installed when the panel is de-energized. The ability to preset the sensor eliminates the need for Personal Protective Equipment (PPE) that is required by OSHA when working with a live panel.

Refer to the *CSDSC and CSDECM Current Switch Devices Product Bulletin (LIT-12012403)* for important product application information.

Features

- **Split and Solid Core Models with Mini-Sized Variants—**Fit in tight enclosures.
- **Monitored Load**—Supplies power without a power supply.
- **Optional N.O. Relay—**Adds 10 A at 125 VAC switching power with a choice of 24 or 12 V coil.
- **Polarity Insensitive Output—**Provides easier wiring.
- **Low Turn on Current—**Extends use to sub-fractional HP motors.
- **LED Indication of Switch Status—**Allows you to easily check the switch's on/off status.

CSDSC Current Switch Devices



Selection Chart

Code Number	Core Type	Minimum Turn-On Amps	Maximum Amps	LEDs	Relay Option
CSDSC-C45050Lx	Clamp	0.45 A	50 A	High, Low, Power	Yes[1]
CSDSC-C50100Lx		0.50 A	100 A		
CSDSC-C50150Lx			150 A		
CSDSCM-C01050		1.00 A	50 A	Trip	No
CSDSCM-S75050L	Solid	0.75 A	50 A	Trip	No
CSDSCM-S75005L					
CSDSCMM-S75050L					

1. See *Relay Options* for relay order code information.

Relay Options

Relay Order Code	Contact Rating	Coil	Relay Code Number (Field Accessory)	Relay Dimensions, in. (mm) (L x H x W)
1	N.O. 10 A at 125 VAC	24 VAC/VDC 15 mA	CRCSDP-NO-24	0.84 x 0.72 x 2.06 (21.3 x 18.3 x 52.3)
2			CRCSDP-NC-24	
3		12 VDC 30 mA	CRCSDP-NO-12	
4			CRCSDP-NC-12	
0	No Relay	N/A	N/A	N/A

The performance specifications are nominal and conform to acceptable industry standards. For applications at conditions beyond these specifications, consult the local Johnson Controls office. Johnson Controls shall not be liable for damages resulting from misapplication or misuse of its products. © 2017 Johnson Controls.

CSDSC Current Switch Devices (Continued)

Technical Specifications

CSDSC Current Switch Devices				
	CSDSC-C45050Lx CSDSC-C50100Lx CSDSC-C50150Lx	**CSDSCM-C01050**	**CSDSC-S75050L**	**CSDSCM-S75005L CSDSCM-S75050L**
Status Output	Switch normally open			
Switch Load Capacity	1.0 at 30 VAC/VDC			
Switch Setpoint	Adjustable			
Maximum Current	50 A 100 A 150 A	50 A	50 A	5 A 50 A
Minimum Trip Setpoint Value	0.45 A 0.50 A 0.50 A	1.00 A	0.75 A	0.75 A 0.75 A
Aperture (Sensing Hole) Size; Dimensions, in. (mm)	0.75 x 0.75 (19.1 x 19.1)	0.4 x 0.32 (10.2 x 8.1 mm)	0.51 (13.0)	0.30 (7.6)
Switch LED Indication	Yes			
Current Switching Mode	Over/Under			
Sensor Supply Voltage	Induced from power conductor cable			
Status Output Wire Size	14 to 24 AWG (1.6 to 0.5 mm)			
Screw Torque	3.5 to 4.4 in·lb (0.4 to 0.5 N·m)			
Isolation Voltage	600 VAC rms (UL), 300 VAC rms (CE)			
Frequency Range	50/60 Hz			
Temperature Range	5 to 140°F (-15 to 60°C)			
Humidity Range	0 to 95% noncondensing			
Dimensions, in. (mm)	2.5 x 0.57 x 2.23 (63.5 x 14.5 x 56.6)	2.0 x 0.75 x 1.75 (50.8 x 19.1 x 44.5)	2.26 x 0.97 x 1.6 (57.4 x 24.6 x 40.6)	1.91 x 0.88 x 1.31 (48.5 x 22.4 x 33.3)
Command Relay Device Actuation Coil	20 to 30 VAC/VDC, 12 to 20 mA or 10 to 14 VAC/VDC, 25 to 35 mA (models except -0L0)	N/A	N/A	N/A
Relay Contact Rating	N.O. 10A at 125 VAC or N.C. 10A at 125 VAC	N/A	N/A	N/A
Relay LED Indication	Yes	N/A	N/A	N/A
Compliance **United States**	UL Listed, File E493157, CCN NMTR, Under UL 508, Industrial Control Equipment			
Canada	UL Listed, File E493157, CCN NMTR7, Under CAN/CSA C22.2 No. 14-M91			
CE **Europe**	CE Mark - Johnson Controls declares that this product is in compliance with the essential requirements and other relevant provisions of the EMC Directive and the Low Voltage Directive.			
Shipping Weight	0.15 lb (0.07 kg)			

The performance specifications are nominal and conform to acceptable industry standards. For applications at conditions beyond these specifications, consult the local Johnson Controls office. Johnson Controls shall not be liable for damages resulting from misapplication or misuse of its products. © 2017 Johnson Controls.

FAN SAFETY ALARM CIRCUITS

RIBMNLB-6/-4/-2

2.75˝ Track Mount AHU Fan Safety Alarm and General Purpose Logic Circuit, 24 Vac/dc Power Input, 2/4/6 Outputs

RIBLB-6/-4/-2

Enclosed AHU Fan Safety Alarm and General Purpose Logic Circuit, 24 Vac/dc Power Input, 2/4/6 Outputs

c UL us LISTED CE RoHS

Made in USA
Meets "Buy American" of ARRA 2009

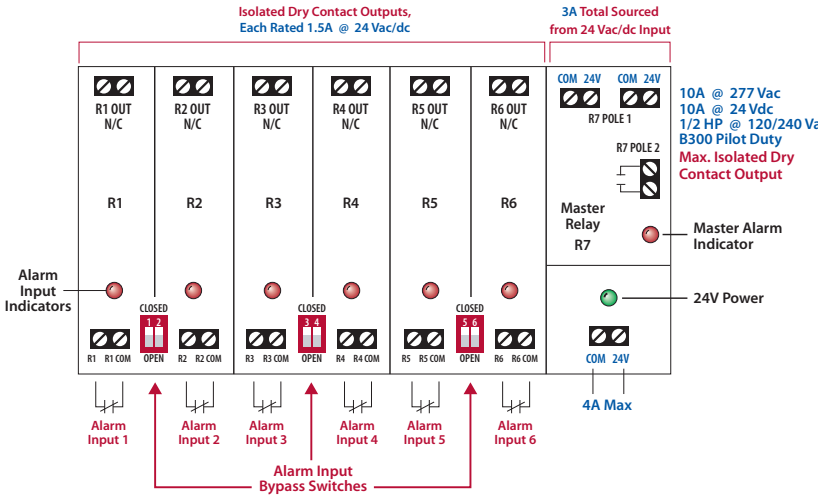

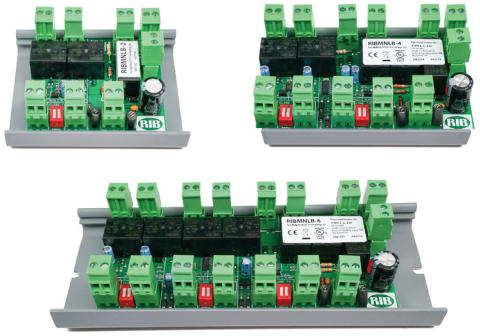

RELAYS

SPECIFICATIONS

Expected Relay Life: 10 million cycles minimum mechanical
Operating Temperature: -30 to 140° F
Humidity Range: 5 to 95% (noncondensing)
Operate Time: 8ms
Power Input: 4 Amp max. @ 24 Vac/dc ; 50-60 Hz
Alarm Status: LED On = Activated
Dimensions: 6.200˝ x 2.750˝ x 1.750˝ (RIBMNLB-6)
4.600˝ x 2.750˝ x 1.750˝ (RIBMNLB-4)
3.000˝ x 2.750˝ x 1.750˝ (RIBMNLB-2)
4.28˝ x 7.00˝ x 2.00˝ with .75˝ NPT Nipple (RIBLB-6/-4/-2)
Track Mount: MT212-6 Mounting Track Provided (RIBMNLB-6)
MT212-4 Mounting Track Provided (RIBMNLB-4, RIBMNLB-2)
Approvals: UL Listed, UL916, UL864, C-UL, CE, RoHS
Housing Rating: UL Listed, NEMA 1, C-UL, CE Approved, UL Accepted for Use in Plenum
Gold Flash: No
Override Switch: No

Notes:

- Track mount models shown above.
- RIBMNLB-6 and RIBLB-6 have six Alarm Inputs and one Master Alarm. RIBMNLB-4 and RIBLB-4 have four Alarm Inputs and one Master Alarm. RIBMNLB-2 and RIBLB-2 have two Alarm Inputs and one Master Alarm.

Models RIBMNLB-6, RIBMNLB-4, and RIBMNLB-2; and RIBLB-6, RIBLB-4, and RIBLB-2 are simply devices that combine a common relay-logic function into a small, easy-to-install, and less expensive form.

A master relay will open if any one of the normally-closed (N/C) inputs open. There are six, four, or two inputs depending on the model chosen. LED status of all inputs, the master relay, and power input is provided. Bypass of un-used inputs is also provided. The RIBMNLB series is provided with mounting track for mounting in user-provided electrical enclosures. The RIBLB series is enclosed in a NEMA-1, 4˝ x 7˝ enclosure with a clear lid to allow viewing of the status LEDs. The master relay has three general-purpose outputs: two 24 V output terminals and one dry-contact output rated up to 10 Amp @ 277 Vac (terminals on RIBMNLB series, wires on RIBLB series.) The most common application is an Air Handling Unit (AHU) fan-safety-shutdown where the master relay is used to shutdown the fan. Contact closure outputs are provided so that a DDC controller can determine the cause of a shutdown.

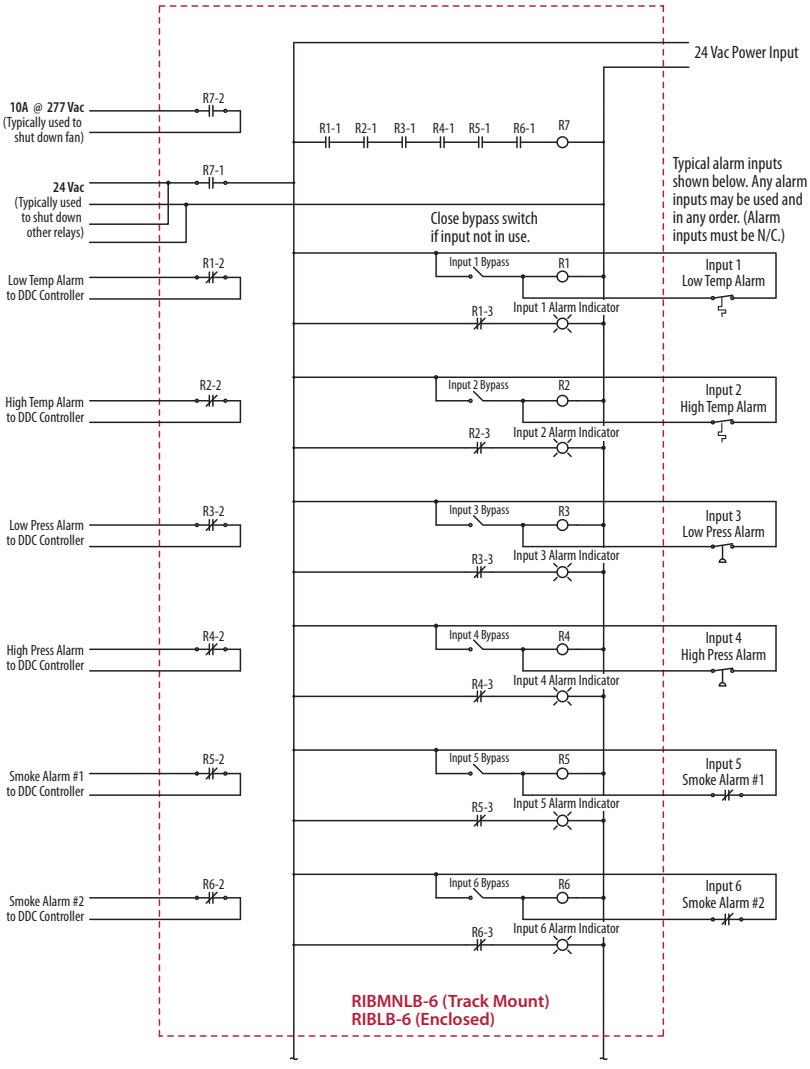

SELECTION GUIDE

Model#	Inputs	
RIBMNLB-6	6	MT212 Mounting Track
RIBMNLB-4	4	MT212 Mounting Track
RIBMNLB-2	2	MT212 Mounting Track
RIBLB-6	6	PE6020 Enclosure
RIBLB-4	4	PE6020 Enclosure
RIBLB-2	2	PE6020 Enclosure

Code No. LIT-1900225
Issued January 6, 2015

VG1000 Series Three-Way, Stainless Steel Trim, NPT End Connections Ball Valves with Spring-Return Electric Actuators without Switches

Description

VG1000 Series Ball Valves are designed to regulate the flow of hot or chilled water and, for some models, low-pressure steam in response to the demand of a controller in HVAC systems. Available in sizes 1/2 through 2 in. (DN15 through DN50), this family of two- and three-way forged brass valves is factory or field mounted to Johnson Controls® VA9104, M9106, M9109, and M9100 Series Non-Spring-Return and VA9203 and VA9208 Series Spring Return Electric Actuators for on/off, floating, or proportional control.

Refer to the *VG1000 Series Forged Brass Ball Valves Product Bulletin (LIT-977132)* for important product application information.

Features

- Forged Brass Body — provides 580 psig static pressure rating.
- 300 Series Stainless Steel Ball and Stem Assembly — tolerates high-temperature water or 15 psi saturated steam with fluid temperatures of -22 to 284°F (-30 to 140°C) or where a higher degree of corrosion protection is desired.
- 500:1 Rangeability — provides accurate control under all load conditions.
- Maintenance-Free Design — performs without failure in excess of 200,000 full stroke cycles in iron-oxide contaminated water.

Repair Information

If the VG1000 Series Ball Valve fails to operate within its specifications, replace the valve body, actuator, or entire assembly. For replacement parts, contact the nearest Johnson Controls representative.



VG1000 Series Three-Way, Spring-Return, Stainless Steel Ball and Stem Ball Valve Assemblies without End Switches

Selection Charts

Three-Way — Spring Return without Switches (Not Rated for Steam Service) (Part 1 of 2)

Fluid Temperatures: -22 to 212°F (-30 to 100°C) Not Rated for Steam Service				AC 24 V			AC 85–264 V (VA9203) AC 120 V (VA9208)
Valve	**Size, in.**	**Cv (Port A/B)**	**Closeoff psig**	**Floating**	**0 to 10 VDC Proportional**	**On/Off**	**On/Off**
				Spring Return Port A Open — Valve Spring Return Counterclockwise			
				VA9203-AGA-2Z	**VA9203-GGA-2Z**	**VA9203-BGA-2**	**VA9203-BUA-2**
VG1845AD	1/2	1.2[1]	200	VG1845AD+923AGA	VG1845AD+923GGA	VG1845AD+923BGA	VG1845AD+923BUA
VG1845AE		1.9[1]		VG1845AE+923AGA	VG1845AE+923GGA	VG1845AE+923BGA	VG1845AE+923BUA
VG1845AF		2.9[1]		VG1845AF+923AGA	VG1845AF+923GGA	VG1845AF+923BGA	VG1845AF+923BUA
VG1845AG		4.7[1]		VG1845AG+923AGA	VG1845AG+923GGA	VG1845AG+923BGA	VG1845AG+923BUA
VG1845AL		7.4[1]		VG1845AL+923AGA	VG1845AL+923GGA	VG1845AL+923BGA	VG1845AL+923BUA
VG1845AN		11.7		VG1845AN+923AGA	VG1845AN+923GGA	VG1845AN+923BGA	VG1845AN+923BUA
VG1845BG	3/4	4.7[1]	200	VG1845BG+923AGA	VG1845BG+923GGA	VG1845BG+923BGA	VG1845BG+923BUA
VG1845BL		7.4[1]		VG1845BL+923AGA	VG1845BL+923GGA	VG1845BL+923BGA	VG1845BL+923BUA
VG1845BN		11.7		VG1845BN+923AGA	VG1845BN+923GGA	VG1845BN+923BGA	VG1845BN+923BUA
VG1845CL	1	7.4[1]	200	VG1845CL+923AGA	VG1845CL+923GGA	VG1845CL+923BGA	VG1845CL+923BUA
VG1845CN		11.7[1]		VG1845CN+923AGA	VG1845CN+923GGA	VG1845CN+923BGA	VG1845CN+923BUA
VG1845CP		18.7		VG1845CP+923AGA	VG1845CP+923GGA	VG1845CP+923BGA	VG1845CP+923BUA
				Spring Return Port A Open — Valve Spring Return Counterclockwise			
				VA9208-AGA-2	**VA9208-GGA-2**	**VA9208-BGA-3**	**VA9208-BAA-3**
VG1845DN	1-1/4	11.7[1]	200	VG1845DN+928AGA	VG1845DN+928GGA	VG1845DN+938BGA	VG1845DN+938BAA
VG1845DP		18.7[1]		VG1845DP+928AGA	VG1845DP+928GGA	VG1845DP+938BGA	VG1845DP+938BAA
VG1845DR		29.2		VG1845DR+928AGA	VG1845DR+928GGA	VG1845DR+938BGA	VG1845DR+938BAA
VG1845EP	1-1/2	18.7[1]	200	VG1845EP+928AGA	VG1845EP+928GGA	VG1845EP+938BGA	VG1845EP+938BAA
VG1845ER		29.2[1]		VG1845ER+928AGA	VG1845ER+928GGA	VG1845ER+938BGA	VG1845ER+938BAA
VG1845ES		46.8		VG1845ES+928AGA	VG1845ES+928GGA	VG1845ES+938BGA	VG1845ES+938BAA
VG1845FR	2	29.2[1]	200	VG1845FR+928AGA	VG1845FR+928GGA	VG1845FR+938BGA	VG1845FR+938BAA
VG1845FS		46.8[1]		VG1845FS+928AGA	VG1845FS+928GGA	VG1845FS+938BGA	VG1845FS+938BAA
VG1845FT		73.7		VG1845FT+928AGA	VG1845FT+928GGA	VG1845FT+938BGA	VG1845FT+938BAA

The performance specifications are nominal and conform to acceptable industry standards. For applications at conditions beyond these specifications, consult the local Johnson Controls office. Johnson Controls, Inc. shall not be liable for damages resulting from misapplication or misuse of its products. © 2015 Johnson Controls, Inc.

VG1000 Series Three-Way, Stainless Steel Trim, NPT End Connections Ball Valves with Spring-Return Electric Actuators without Switches (Continued)

Three-Way — Spring Return without Switches (Not Rated for Steam Service) (Part 2 of 2)

Fluid Temperatures: -22 to 212°F (-30 to 100°C) Not Rated for Steam Service				AC 24 V			AC 85–264 V (VA9203) AC 120 V (VA9208)
Valve	**Size, in.**	**Cv (Port A/B)**	**Closeoff psig**	**Floating**	**0 to 10 VDC Proportional**	**On/Off**	**On/Off**
				Spring Return Port A Closed — Valve Spring Return Clockwise			
				VA9203-AGA-2Z	**VA9203-GGA-2Z**	**VA9203-BGA-2**	**VA9203-BUA-2**
VG1845AD	1/2	1.2[1]	200	VG1845AD+943AGA	VG1845AD+943GGA	VG1845AD+943BGA	VG1845AD+943BUA
VG1845AE		1.9[1]		VG1845AE+943AGA	VG1845AE+943GGA	VG1845AE+943BGA	VG1845AE+943BUA
VG1845AF		2.9[1]		VG1845AF+943AGA	VG1845AF+943GGA	VG1845AF+943BGA	VG1845AF+943BUA
VG1845AG		4.7[1]		VG1845AG+943AGA	VG1845AG+943GGA	VG1845AG+943BGA	VG1845AG+943BUA
VG1845AL		7.4[1]		VG1845AL+943AGA	VG1845AL+943GGA	VG1845AL+943BGA	VG1845AL+943BUA
VG1845AN		11.7		VG1845AN+943AGA	VG1845AN+943GGA	VG1845AN+943BGA	VG1845AN+943BUA
VG1845BG	3/4	4.7[1]	200	VG1845BG+943AGA	VG1845BG+943GGA	VG1845BG+943BGA	VG1845BG+943BUA
VG1845BL		7.4[1]		VG1845BL+943AGA	VG1845BL+943GGA	VG1845BL+943BGA	VG1845BL+943BUA
VG1845BN		11.7		VG1845BN+943AGA	VG1845BN+943GGA	VG1845BN+943BGA	VG1845BN+943BUA
VG1845CL	1	7.4[1]	200	VG1845CL+943AGA	VG1845CL+943GGA	VG1845CL+943BGA	VG1845CL+943BUA
VG1845CN		11.7[1]		VG1845CN+943AGA	VG1845CN+943GGA	VG1845CN+943BGA	VG1845CN+943BUA
VG1845CP		18.7		VG1845CP+943AGA	VG1845CP+943GGA	VG1845CP+943BGA	VG1845CP+943BUA
				Spring Return Port A Closed — Valve Spring Return Clockwise			
				VA9208-AGA-2	**VA9208-GGA-2**	**VA9208-BGA-3**	**VA9208-BAA-3**
VG1845DN	1-1/4	11.7[1]	200	VG1845DN+948AGA	VG1845DN+948GGA	VG1845DN+958BGA	VG1845DN+958BAA
VG1845DP		18.7[1]		VG1845DP+948AGA	VG1845DP+948GGA	VG1845DP+958BGA	VG1845DP+958BAA
VG1845DR		29.2		VG1845DR+948AGA	VG1845DR+948GGA	VG1845DR+958BGA	VG1845DR+958BAA
VG1845EP	1-1/2	18.7[1]	200	VG1845EP+948AGA	VG1845EP+948GGA	VG1845EP+958BGA	VG1845EP+958BAA
VG1845ER		29.2[1]		VG1845ER+948AGA	VG1845ER+948GGA	VG1845ER+958BGA	VG1845ER+958BAA
VG1845ES		46.8		VG1845ES+948AGA	VG1845ES+948GGA	VG1845ES+958BGA	VG1845ES+958BAA
VG1845FR	2	29.2[1]	200	VG1845FR+948AGA	VG1845FR+948GGA	VG1845FR+958BGA	VG1845FR+958BAA
VG1845FS		46.8[1]		VG1845FS+948AGA	VG1845FS+948GGA	VG1845FS+958BGA	VG1845FS+958BAA
VG1845FT		73.7		VG1845FT+948AGA	VG1845FT+948GGA	VG1845FT+958BGA	VG1845FT+958BAA

1. Valve has a characterizing disk.

Valve Assemblies with M9000-561 Thermal Barrier Installed — Rated for High-Temperature Fluid Service, Three-Way — Spring Return without Switches (Part 1 of 2)

Fluid Temperatures: -22 to 284°F (-30 to 140°C) Water and 15 psi Steam				AC 24 V			AC 85–264 V (VA9203) AC 120 V (VA9208)
Valve	**Size, in.**	**Cv (Port A/B)**	**Closeoff psig**	**Floating**	**0 to 10 VDC Proportional**	**On/Off**	**On/Off**
				Spring Return Port A Open — Valve Spring Return Counterclockwise			
				VA9203-AGA-2Z	**VA9203-GGA-2Z**	**VA9203-BGA-2**	**VA9203-BUA-2**
VG1845AD	1/2	1.2[1]	200	VG1845ADH923AGA	VG1845ADH923GGA	VG1845ADH923BGA	VG1845ADH923BUA
VG1845AE		1.9[1]		VG1845AEH923AGA	VG1845AEH923GGA	VG1845AEH923BGA	VG1845AEH923BUA
VG1845AF		2.9[1]		VG1845AFH923AGA	VG1845AFH923GGA	VG1845AFH923BGA	VG1845AFH923BUA
VG1845AG		4.7[1]		VG1845AGH923AGA	VG1845AGH923GGA	VG1845AGH923BGA	VG1845AGH923BUA
VG1845AL		7.4[1]		VG1845ALH923AGA	VG1845ALH923GGA	VG1845ALH923BGA	VG1845ALH923BUA
VG1845AN		11.7		VG1845ANH923AGA	VG1845ANH923GGA	VG1845ANH923BGA	VG1845ANH923BUA
VG1845BG	3/4	4.7[1]	200	VG1845BGH923AGA	VG1845BGH923GGA	VG1845BGH923BGA	VG1845BGH923BUA
VG1845BL		7.4[1]		VG1845BLH923AGA	VG1845BLH923GGA	VG1845BLH923BGA	VG1845BLH923BUA
VG1845BN		11.7		VG1845BNH923AGA	VG1845BNH923GGA	VG1845BNH923BGA	VG1845BNH923BUA
VG1845CL	1	7.4[1]	200	VG1845CLH923AGA	VG1845CLH923GGA	VG1845CLH923BGA	VG1845CLH923BUA
VG1845CN		11.7[1]		VG1845CNH923AGA	VG1845CNH923GGA	VG1845CNH923BGA	VG1845CNH923BUA
VG1845CP		18.7		VG1845CPH923AGA	VG1845CPH923GGA	VG1845CPH923BGA	VG1845CPH923BUA

The performance specifications are nominal and conform to acceptable industry standards. For applications at conditions beyond these specifications, consult the local Johnson Controls office. Johnson Controls, Inc. shall not be liable for damages resulting from misapplication or misuse of its products. © 2015 Johnson Controls, Inc.

VG1000 Series Three-Way, Stainless Steel Trim, NPT End Connections Ball Valves with Spring-Return Electric Actuators without Switches (Continued)

Valve Assemblies with M9000-561 Thermal Barrier Installed — Rated for High-Temperature Fluid Service, Three-Way — Spring Return without Switches (Part 2 of 2)

Fluid Temperatures: -22 to 284°F (-30 to 140°C) Water and 15 psi Steam				AC 24 V			AC 85–264 V (VA9203) AC 120 V (VA9208)
Valve	**Size, in.**	**Cv (Port A/B)**	**Closeoff psig**	**Floating**	**0 to 10 VDC Proportional**	**On/Off**	**On/Off**
				Spring Return Port A Open — Valve Spring Return Counterclockwise			
				VA9208-AGA-2	**VA9208-GGA-2**	**VA9208-BGA-3**	**VA9208-BAA-3**
VG1845DN	1-1/4	11.7[1]	200	VG1845DNH928AGA	VG1845DNH928GGA	VG1845DNH938BGA	VG1845DNH938BAA
VG1845DP		18.7[1]		VG1845DPH928AGA	VG1845DPH928GGA	VG1845DPH938BGA	VG1845DPH938BAA
VG1845DR		29.2		VG1845DRH928AGA	VG1845DRH928GGA	VG1845DRH938BGA	VG1845DRH938BAA
VG1845EP	1-1/2	18.7[1]	200	VG1845EPH928AGA	VG1845EPH928GGA	VG1845EPH938BGA	VG1845EPH938BAA
VG1845ER		29.2[1]		VG1845ERH928AGA	VG1845ERH928GGA	VG1845ERH938BGA	VG1845ERH938BAA
VG1845ES		46.8		VG1845ESH928AGA	VG1845ESH928GGA	VG1845ESH938BGA	VG1845ESH938BAA
VG1845FR	2	29.2[1]	200	VG1845FRH928AGA	VG1845FRH928GGA	VG1845FRH938BGA	VG1845FRH938BAA
VG1845FS		46.8[1]		VG1845FSH928AGA	VG1845FSH928GGA	VG1845FSH938BGA	VG1845FSH938BAA
VG1845FT		73.7		VG1845FTH928AGA	VG1845FTH928GGA	VG1845FTH938BGA	VG1845FTH938BAA
				Spring Return Port A Closed — Valve Spring Return Clockwise			
				VA9203-AGA-2Z	**VA9203-GGA-2Z**	**VA9203-BGA-2**	**VA9203-BUA-2**
VG1845AD	1/2	1.2[1]	200	VG1845ADH943AGA	VG1845ADH943GGA	VG1845ADH943BGA	VG1845ADH943BUA
VG1845AE		1.9[1]		VG1845AEH943AGA	VG1845AEH943GGA	VG1845AEH943BGA	VG1845AEH943BUA
VG1845AF		2.9[1]		VG1845AFH943AGA	VG1845AFH943GGA	VG1845AFH943BGA	VG1845AFH943BUA
VG1845AG		4.7[1]		VG1845AGH943AGA	VG1845AGH943GGA	VG1845AGH943BGA	VG1845AGH943BUA
VG1845AL		7.4[1]		VG1845ALH943AGA	VG1845ALH943GGA	VG1845ALH943BGA	VG1845ALH943BUA
VG1845AN		11.7		VG1845ANH943AGA	VG1845ANH943GGA	VG1845ANH943BGA	VG1845ANH943BUA
VG1845BG	3/4	4.7[1]	200	VG1845BGH943AGA	VG1845BGH943GGA	VG1845BGH943BGA	VG1845BGH943BUA
VG1845BL		7.4[1]		VG1845BLH943AGA	VG1845BLH943GGA	VG1845BLH943BGA	VG1845BLH943BUA
VG1845BN		11.7		VG1845BNH943AGA	VG1845BNH943GGA	VG1845BNH943BGA	VG1845BNH943BUA
VG1845CL	1	7.4[1]	200	VG1845CLH943AGA	VG1845CLH943GGA	VG1845CLH943BGA	VG1845CLH943BUA
VG1845CN		11.7[1]		VG1845CNH943AGA	VG1845CNH943GGA	VG1845CNH943BGA	VG1845CNH943BUA
VG1845CP		18.7		VG1845CPH943AGA	VG1845CPH943GGA	VG1845CPH943BGA	VG1845CPH943BUA
				Spring Return Port A Closed — Valve Spring Return Clockwise			
				VA9208-AGA-2	**VA9208-GGA-2**	**VA9208-BGA-3**	**VA9208-BAA-3**
VG1845DN	1-1/4	11.7[1]	200	VG1845DNH948AGA	VG1845DNH948GGA	VG1845DNH958BGA	VG1845DNH958BAA
VG1845DP		18.7[1]		VG1845DPH948AGA	VG1845DPH948GGA	VG1845DPH958BGA	VG1845DPH958BAA
VG1845DR		29.2		VG1845DRH948AGA	VG1845DRH948GGA	VG1845DRH958BGA	VG1845DRH958BAA
VG1845EP	1-1/2	18.7[1]	200	VG1845EPH948AGA	VG1845EPH948GGA	VG1845EPH958BGA	VG1845EPH958BAA
VG1845ER		29.2[1]		VG1845ERH948AGA	VG1845ERH948GGA	VG1845ERH958BGA	VG1845ERH958BAA
VG1845ES		46.8		VG1845ESH948AGA	VG1845ESH948GGA	VG1845ESH958BGA	VG1845ESH958BAA
VG1845FR	2	29.2[1]	200	VG1845FRH948AGA	VG1845FRH948GGA	VG1845FRH958BGA	VG1845FRH958BAA
VG1845FS		46.8[1]		VG1845FSH948AGA	VG1845FSH948GGA	VG1845FSH958BGA	VG1845FSH958BAA
VG1845FT		73.7		VG1845FTH948AGA	VG1845FTH948GGA	VG1845FTH958BGA	VG1845FTH958BAA

1. Valve has a characterizing disk.

The performance specifications are nominal and conform to acceptable industry standards. For applications at conditions beyond these specifications, consult the local Johnson Controls office. Johnson Controls, Inc. shall not be liable for damages resulting from misapplication or misuse of its products. © 2015 Johnson Controls, Inc.

VG1000 Series Three-Way, Stainless Steel Trim, NPT End Connections Ball Valves with Spring-Return Electric Actuators without Switches (Continued)

Technical Specifications

VG1000 Series Three-Way, Stainless Steel Trim, NPT End Connections Ball Valves with Spring-Return Electric Actuators without Switches		
Service[1]		Hot Water, Chilled Water, 50/50 Glycol Solutions, and 15 psig (103 kPa) Saturated Steam for HVAC Systems
Fluid Temperature Limits	**Water**	-22 to 284°F (-30 to 140°C)
	Steam	15 psig (103 kPa) at 250°F (121°C)
Maximum Actuator Fluid Temperature Limits	**212°F (100°C)**	VA9203 Series Spring-Return Actuators VA9208 Series Spring-Return Actuators
	284°F (140°C)	VA9203 Series Spring-Return Actuators with M9000-561 Thermal Barrier Installed VA9208 Series Spring-Return Actuators with M9000-561 Thermal Barrier Installed
Valve Body Pressure Rating	**Water**	580 psig (4,000 kPa) at 203°F (95°C) (PN40) 464 psig (3,196 kPa) at 284°F (140°C) (PN40)
	Steam	15 psig (103 kPa) Saturated Steam (Applies to VA9208 Series Spring Return Actuator with M9000-561 Thermal Barrier Installed)
Maximum Closeoff Pressure		200 psid (1,378 kPa)
Maximum Recommended Operating Pressure Drop		50 psid (340 kPa)
Flow Characteristics	**Three-Way**	Equal Percentage Flow Characteristics of In-Line Port A (Coil) and Linear Flow Characteristics of Angle Port B (Bypass)
Rangeability[2]		Greater than 500:1
Minimum Ambient Operating Temperature	**-22°F (-30°C)**	VA9203 Series Spring-Return Actuators
	-40°F (-40°C)	VA9208 Series Spring-Return Actuators
Maximum Ambient Operating Temperature[3] **(Limited by the Actuator and Linkage)**	**Direct Mount**	140°F (60°C): VA9208 Series Spring-Return Actuators
Leakage		0.01% of Maximum Flow per ANSI/FCI 70-2, Class 4
		1% of Maximum Flow
End Connections		National Pipe Thread (NPT)
Materials	**Body**	Forged Brass
	Ball	300 Series Stainless Steel
	Blowout-Proof Stem	300 Series Stainless Steel
	Seats	Graphite-Reinforced PTFE with Ethylene Propylene Diene Monomer (EPDM) O-Ring Backing
	Stem Seals	EPDM Double O-Rings
	Characterizing Disk	Amodel® AS-1145HS Polyphthalamide Resin
Compliance CRN		0C16910.5C

1. Proper water treatment is recommended; refer to the VDI 2035 Guideline.
2. Rangeability is defined as the ratio of maximum controllable flow to minimum controllable flow.
3. In steam applications, install the valve with the stem horizontal to the piping and wrap the valve and piping with insulation.

The performance specifications are nominal and conform to acceptable industry standards. For applications at conditions beyond these specifications, consult the local Johnson Controls office. Johnson Controls, Inc. shall not be liable for damages resulting from misapplication or misuse of its products. © 2015 Johnson Controls, Inc.

IDEC GENERAL-PURPOSE RELAYS

RH, RJ, RR SERIES

DESCRIPTION

The IDEC general-purpose relays are available in the **RH Series** blade-style relays and the **RR Series** pin-style relays and the **RJ Series** compact relays.

The **RH Series** features a 10A switching capacity. They are available in SPDT, DPDT, 3PDT, and 4PDT contact configurations, driven by AC or DC coils, and they have blade terminals for socket mounting.

The **RR Series** has a 10A contact rating. The **RR Series** relays are available in SPDT, DPDT, and 3PDT configurations driven by AC or DC coils, and they have pin or blade terminals for socket mounting.

The **RJ Series** is compact to reduce space requirements. They are available in a 12A SPDT version and an 8A DPDT version. They are driven by AC or DC coils and have blade terminals for socket mounting.

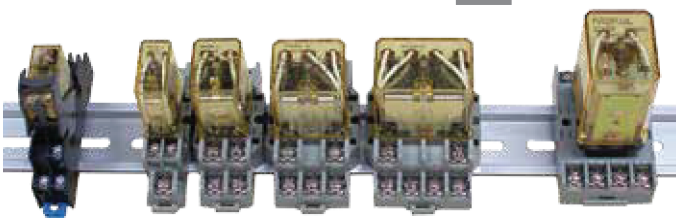

RJ Series RH Series RR Series

FEATURES

- ***Blade style, pin style, and compact models***
- ***Indicator light and/or check button available***
- ***Surface or DIN rail mount***
- ***UL recognized, CSA certified***

SPECIFICATIONS

COIL RATINGS

RH SERIES

RATED VOLTAGE		RATED CURRENT (mA) ±15% @ 20°C 60 Hz SPDT	DPDT	3PDT	4PDT	50 Hz SPDT	DPDT	3PDT	4PDT	COIL RESISTANCE (Ω) ±10% @ 20°C SPDT	DPDT	3PDT	4PDT
AC	12	75	100	140	165	86	121	165	196	165	39.3	25.3	21.2
	24	37	50	70	83	42	60.5	81	98	83	153	103	84.5
	120	7.5	–	14.2	16.5	8.6	–	16.4	19.5	16.5	–	10,800	7,360
	240	4.3	–	7.1	8.3	4.9	–	8.2	9.8	8.3	–	12,100	9,120
		SPDT		DPDT		3PDT		4PDT		SPDT	DPDT	3PDT	4PDT
DC	12	64		75		120		125		188	160	100	96
	24	32		36.9		60		62		750	650	400	388

RR Series

RATED VOLTAGE		Rated Current (mA) ±15% @ 20°C 60 Hz	50 Hz	COIL RESISTANCE (Ω) ±10% @ 20°C
AC	12	210	245	365
	24	105	121	182
	120	20.5	24	35
	240	10.5	12.1	18
DC	12	120		100
	24	60		400

RJ Series

	MODELS		Rated Current (mA) ±15% @ 20°C WITHOUT LED[1] 60 Hz	50 Hz	WITH LED[1] 60 Hz	50 Hz	COIL RESISTANCE (Ω) ±10% @ 20°C
AC	BLADE & PCB	24V	37.5	43.9	41.1	47.5	243
		120V	7.5	8.8	7.4	8.7	6,400
DC	BLADE	24V	22.1		25.7		1,080
	PCB	24V	22.1		–		1,080

1. LED indicator is only available on Blade relays.

Maximum continuous applied voltage
- **RH, RR**: 110% of rated voltage
- **RJ**: 140% of rated voltage

Pull-in voltage
- **RH, RR, RJ/AC**: 80% of rated voltage
- **RJ, RJ/DC**: 70% of rated voltage

Drop-out voltage
- **AC**: 30% or more of rated voltage
- **DC**: 10% or more of rated voltage

Contact material
- **RH**: Silver cadmium oxide
- **RR**: Silver
- **RJ**: Silver nickel alloy

CONTACT RATINGS

RH SERIES (UL ratings)

VOLTAGE	RESISTIVE RH1 RH2	RH3	RH4	GENERAL USE RH1 RH2	RH3	RH4	HORSEPOWER RATING RH1 RH2	RH3	RH4
240V AC	10A	7.5A	7.5A	7A	6.5A	5A	1/3 hp	1/3 hp	–
120V AC	–	10A	10A	–	7.5A	7.5A	1/6 hp	1/6 hp	–
30V DC	10A	10A	–	7A	–	–	–	–	–
28V DC	–	–	10A	–	–	–	–	–	–

RR SERIES (UL ratings)

VOLTAGE	RESITIVE (A)	INDUCTIVE (A) cosΘ= 0.3	MOTOR LOAD (hp)
240 AC	10	7	1/3
120 AC	10	7.5	1/4
30 DC	10	7	–

RJ Series (UL ratings)

	CONTACT	RJ1S	RJ2S
Resistive Load (Maximum)	N.O.	12A @ 250 VAC/30 VDC	8A @ 250 VAC/30 VDC
	N.C.	12A @ 250 VAC; 6A @ 30 VDC	8A @ 250 VAC; 4A @ 30 VDC
Inductive Load (Maximum)	N.O.	7.5A @ 250 VAC; 6A @ 30 VDC	4A @ 250 VAC; 4A @ 30 VDC
	N.C.	7.5A @ 250 VAC; 3A @ 30 VDC	4A @ 250 VAC; 2A @ 30 VDC

Contact resistance
- **RH**: 50 mΩ maximum
- **RR**: 30 mΩ maximum
- **RJ**: 50 mΩ maximum

Operate time
- **RH, RR**: 25 ms maximum
- **RJ**: 15 ms maximum

Release time
- **RH, RR**: 25 ms maximum
- **RJ**: 10 ms maximum

Min load
- **RH**: 24 VDC/30 mA, 5 VDC/100 mA
- **RR**: 1 VDC/10 mA
- **RJ**: 5 VDC/100 mA

Operating temp: -22° to 158°F (-30° to 70°C)

Agency approvals: UL-recognized component, **(RH, RR):** File #E66043, **(RJ):** File #E55996, CSA certified, File #LR35144; CE certified (not RR blade style)

Warranty: 1 year

HUGE IN-STOCK INVENTORY, AVAILABLE TO SHIP SAME DAY
kele.com | 877-826-9037 USA

IDEC GENERAL-PURPOSE RELAYS

RH, RJ, RR SERIES

DIMENSIONS

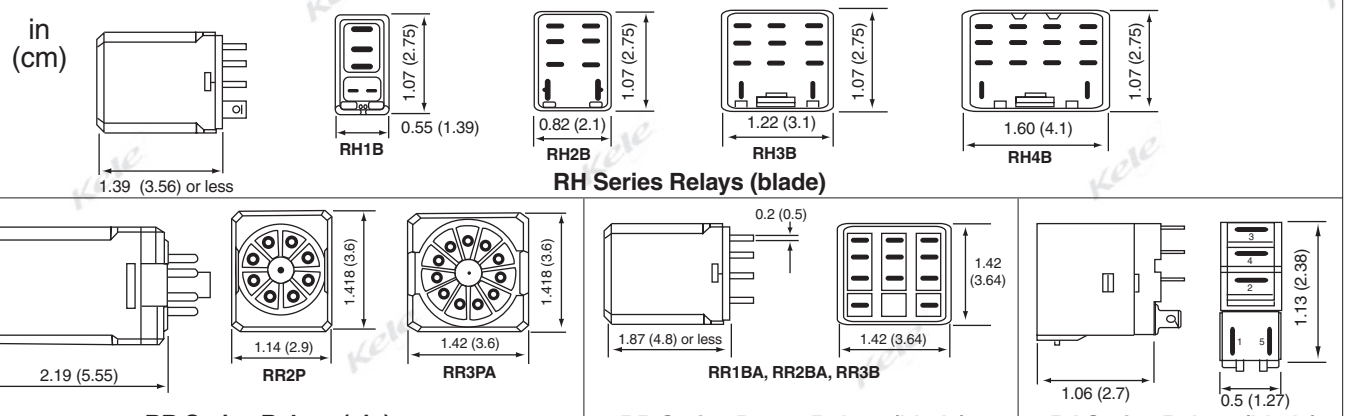

WIRING

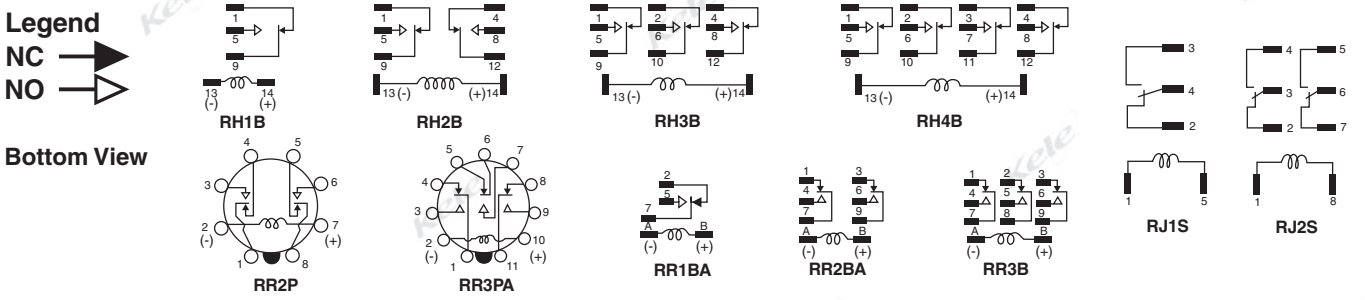

ORDERING INFORMATION

MODEL	DESCRIPTION	
RH1B	Relay, SPDT, blade (use SH1B-05 socket)	
RH2B	Relay, DPDT, blade (use SH2B-05 socket)	
RH3B	Relay, 3PDT, blade (use SH3B-05 socket)	
RH4B	Relay, 4PDT, blade (use SH4B-05 socket)	
	U	Standard relay
	UL	Indicator light
	ULC	Indicator light and check button
		AC12V 12 VAC coil voltage
		AC24V 24 VAC coil voltage
		AC120V 120 VAC coil voltage
		AC240V 240 VAC coil voltage
		DC12V 12 VDC coil voltage
		DC24V 24 VDC coil voltage

RH1B	**U**	**AC24V**

MODEL	DESCRIPTION	
RR2P	Relay, DPDT, 8 pin (use SR2P-05 or SR2P-06)	
RR3PA	Relay, 3PDT, 11 pin (use SR3P-06 socket)	
RR1BA	Relay, SPDT, 11 blade (use SR3B-05 socket)	
RR2BA	Relay, DPDT, 11 blade (use SR3B-05 socket)	
RR3B	Relay, 3PDT, 11 blade (use SR3B-05 socket)	
	U	Standard relay
	UL	Indicator light
	ULC	Indicator light and check button
		AC12V 12 VAC coil voltage
		AC24V 24 VAC coil voltage
		AC120V 120 VAC coil voltage
		AC240V 240 VAC coil voltage
		DC12V 12 VDC coil voltage
		DC24V 24 VDC coil voltage

RR2P	**U**	**AC24V**

Example: **RR2PUAC24V** DPDT relay 8 pin with 24VAC coil

MODEL	DESCRIPTION	
RJ1S	Relay, SPDT (use SJ1S-05B socket)	
RJ2S	Relay, DPDT (use SJ2S-05B socket)	
	C	No options
	CL	LED indicator
		A24 24 VAC coil voltage
		A120 120 VAC coil voltage
		D24 24 VDC coil voltage

RJ1S	**C**	**A24**

RELATED PRODUCTS

DIN-3F	35 mm DIN rail, steel, 39.4" (1m), RoHS compliant
DIN-3F, BAM-1000	DIN rail
SH, SR, SJ Series	Relay sockets

IDEC RELAY SOCKETS

SH, SJ, SR SERIES

DESCRIPTION

The **IDEC SH and SR Series** relay sockets are for use with the IDEC **RH / RR Series** relays and **RTE Series** timers. The **SH** and **SR Series** include both blade and pin style sockets and are available for one, two, three and four pole relays. The **SH** and **SR** sockets can be DIN rail or surface mounted. The **SJ Series** of IDEC relay sockets are for use with the IDEC **RJ1S** and **RJ2S Series** relays. They can be DIN rail or surface mounted.



SJ1S, SJ2S

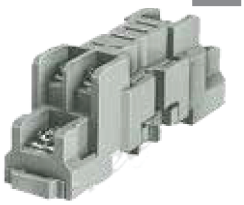

SH1B-05

FEATURES

- ***Use with IDEC RH / RR / RJ relays and RTE timers***
- ***Screw terminals with captive wire clamp***
- ***Surface or DIN rail mount***
- ***UL recognized, CSA certified and CE approved***

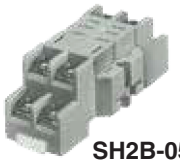

SH2B-05



SH3B-05



SH4B-05



SR2P-05



SR2P-06



SR3P-06



SR3B-05

SPECIFICATIONS

Model	Socket Type	Rated Voltage	Rated Current	Hold Down Clip or SpringWire Size	Wire Size	Weight	Approvals
SJ1S-05B	Blade, DIN rail or surface mount	250V	12A	Lever: SJ9Z-C1 (provided)	Two 14 AWG	0.06 lb (0.03 Kg)	UL recognized File #E62437, CSA certified File #LR84913, CE
SJ2S-05B	Blade, DIN rail or surface mount	250V	8A	Lever: SJ9Z-C1 (provided)	Two 14 AWG	0.07 lb (0.034 Kg)	UL recognized File #E62437, CSA certified File #LR84913, CE
SH1B-05	Blade, DIN rail or surface mount	250V	10A	Spring: SYS-02F1; Clip: SFA-101, SFA-202	Two 12 AWG	0.06 lb (0.03 Kg)	UL recognized File #E62437, CSA certified File #LR35144e, CE
SH2B-05	Blade, DIN rail or surface mount	300V	10A	Spring: SY4S-02F1; Clip: SFA-101, SFA-202	Two 12 AWG	0.10 lb (0.05 Kg)	UL recognized File #E62437, CSA certified File #LR35144e, CE
SH3B-05	Blade, DIN rail or surface mount	300V	10A	Spring: SH3B05F1; Clip: SFA-101, SFA-202	Two 12 AWG	0.13 lb (0.06 Kg)	UL recognized File #E62437, CSA certified File #LR35144e, CE
SH4B-05	Blade, DIN rail or surface mount	300V	10A	Spring: SH4B-02F1; Clip: SFA-101, SFA-202	Two 12 AWG	0.16 lb (0.07 Kg)	UL recognized File #E62437, CSA certified File #LR35144e, CE
SR2P-05	8-Pin DIN rail or surface mount	300V	10A	Spring: SR2B-02F1 (RR2P only); Clip: SFA-203 (RTE-P1 only)	Two 12 AWG	0.10 lb (0.05 Kg)	UL recognized File #E62437, CSA certified File #LR35144e, CE
SR2P-06	8-Pin, DIN rail or surface mount	300V	10A	Spring: SR2B-02F1 (RR2P only); Clip: SFA-202 (RTE-P1 only)	Two 12 AWG	0.10 lb (0.05 Kg)	UL recognized File #E62437, CSA certified File #LR35144e, CE
SR3P-06	11-Pin, DIN rail or surface mount	300V	10A	Spring: SR3B-02F1 (RR only); Clip: SFA-202 (RTE-P2 only)	Two 12 AWG	0.13 lb (0.06 Kg)	UL recognized File #E62437, CSA certified File #LR35144e, CE
SR3B-05	Blade, DIN rail or surface mount	300V	10A	Spring: SR3B-02F1 (RR3PA only); Clip: SFA-202 (RTE-P2 only)	Two 12 AWG	0.14 lb (0.06 Kg)	UL recognized File #E62437, CSA certified File #LR35144e, CE

IDEC RELAY SOCKETS

SH, SJ, SR SERIES

DIMENSIONS

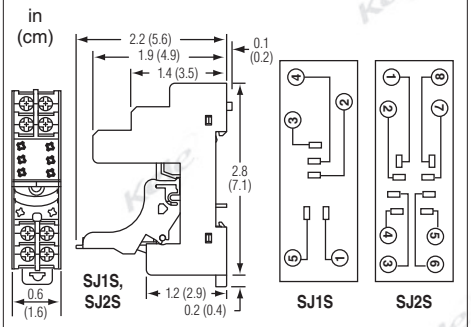

SJ1S, SJ2S

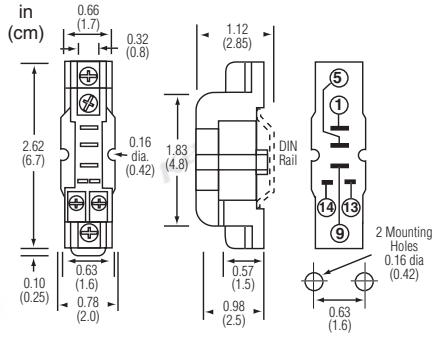

SH1B-05

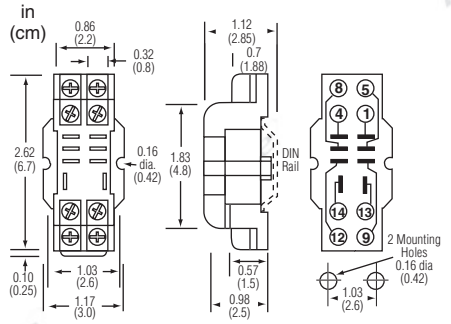

SH2B-05

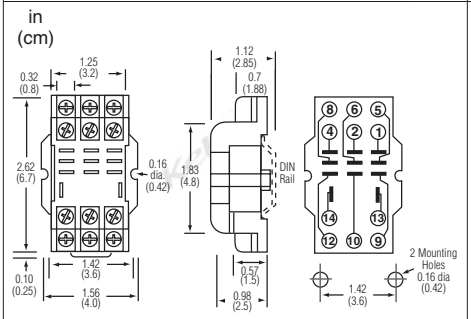

SH3B-05

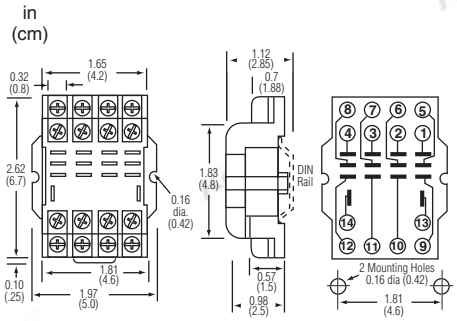

SH4B-05

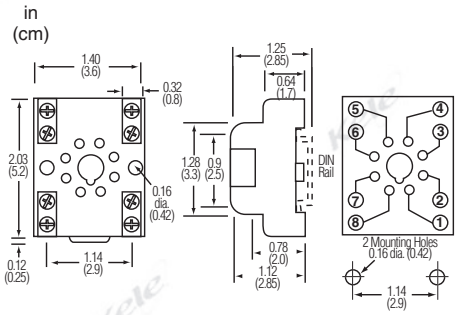

SR2P-05

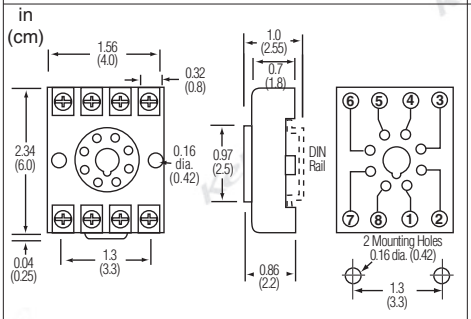

SR2P-06

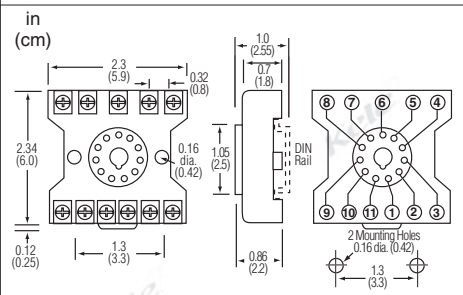

SR3P-06

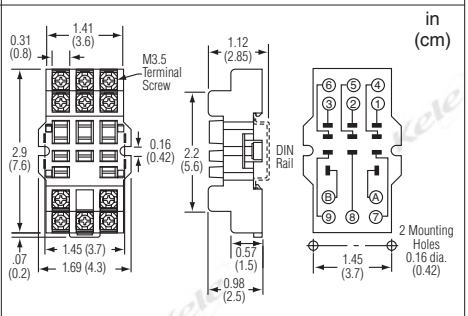

SR3B-05

ORDERING INFORMATION

MODEL	DESCRIPTION
SH1B-05	Relay socket, SPDT blade type, DIN/surface mount
SH2B-05	Relay socket, DPDT blade type, DIN/surface mount
SH3B-05	Relay socket, 3PDT blade type, DIN/surface mount
SH4B-05	Relay socket, 4PDT blade type, DIN/surface mount
SJ1S-05B	Relay socket, SPDT blade type, DIN/surface mount
SJ2S-05B	Relay socket, DPDT blade type, DIN/surface mount
SR2P-05	Relay socket, DPDT pin type, DIN/surface mount
SR2P-06	Relay socket, DPDT pin type, DIN/surface mount
SR3B-05	Relay socket, three-pole blade type, DIN/surface mount
SR3P-06	Relay socket, 3PDT pin type, DIN/surface mount

RELATED PRODUCTS

DIN-3F, BAM-1000	DIN rail
RH, RJ, RR series	Relay
RTE Series	Time delay relay

SECTION 7
EQUIPMENT SCHEDULES

Project Name: Iqualuit Waste Water Treatment Plant Upgrades
Project Number: 8N0Y-0079

Valve Schedule

Tag						Valve Information														Actuator Information		
Item	System	Service	Qty.	JCI DWG	Ref. Dwg.	Code Number	Valve Family	Configuration	Fail Position	Inlet Pipe Size (in)	Valve Size (in)	Medium	Flow (gpm or lbs/hr)	Design Delta P (psi)	Valve Delta P (psi)	Design Coefficient (Cv)	Valve Coefficient (Cv)	Valve Close Off (psi)	Trim Material	Connection	Code Number	Actuator Control	Comments
1	AHU-2	PH-O	1	006.001	M202	VG1245DP+928GGA	Ball Valve	2-Way	Valve Open	2	1-1/4	Water	38.2	5.0	4.2	17.1	18.7	200.0	Stainless Steel	Threaded	VA9208-GGA-2	0-10VDC PROP	
2	AHU-2	RH-O	1	006.001	M202	VG1245CL+923GGA	Ball Valve	2-Way	Valve Open	2	1	Water	11.1	5.0	2.2	5.0	7.4	200.0	Stainless Steel	Threaded	VA9203-GGA-2Z	0-10VDC PROP	
3	AHU-3	RH-O	1	006.006	M301	VG1845DP+948GGA	Ball Valve	3-Way	Normal Position		1-1/4	Water	26.9	5.0	2.1	12.1	18.7	200.0	Stainless Steel	Threaded	VA9208-GGA-2	0-10VDC PROP	NOTE-1
4	CF-1	HTG-O	1	007.001	M500	VG1245AD+923GGA	Ball Valve	2-Way	Valve Open		1/2	Water	1.6	3.0	1.8	0.9	1.2	200.0	Stainless Steel	Threaded	VA9203-GGA-2Z	0-10VDC PROP	NOTE-1
5	HRV-1	PH-O	1	009.001	M601	VG1245AD+923GGA	Ball Valve	2-Way	Valve Open	1	1/2	Water	0.6	3.0	0.3	0.4	1.2	200.0	Stainless Steel	Threaded	VA9203-GGA-2Z	0-10VDC PROP	NOTE-3
6	HRV-1	RH-O	1	009.001	M601	VG1245AD+923GGA	Ball Valve	2-Way	Valve Open	1	1/2	Water	0.5	3.0	0.2	0.3	1.2	200.0	Stainless Steel	Threaded	VA9203-GGA-2Z	0-10VDC PROP	NOTE-3
7	CUH-1.1	HTG-VLV	1	010.001	M602	VG1245CL+923BUB	Ball Valve	2-Way	Valve Open	1	1	Water	1.6	3.0	0.0	0.9	7.4	200.0	Stainless Steel	Threaded	VA9203-BUB-2	120VAC On/Off	
8	UH-2.8	PBUHCV-O	1	010.002	M402	VG1245CL+923GGA	Ball Valve	2-Way	Valve Open		1	Water	4.9	3.0	0.4	2.8	7.4	200.0	Stainless Steel	Threaded	VA9203-GGA-2Z	0-10VDC PROP	NOTE-1
9	RAD-1 (E-WF-1)	RAD1-VLV	1	010.002	M602	VG1245CL+923BGB	Ball Valve	2-Way	Valve Open	1	1	Water		3.0	0.0	0.0	7.4	200.0	Stainless Steel	Threaded	VA9203-BGB-2	24VAC On/Off	NOTE-2, 6
10	RAD-2 (E-WF-1)	RAD2-VLV	1	010.002	M602	VG1245CL+923BGB	Ball Valve	2-Way	Valve Open	1	1	Water		3.0	0.0	0.0	7.4	200.0	Stainless Steel	Threaded	VA9203-BGB-2	24VAC On/Off	NOTE-2, 6
11	RAD-3 (WF-1)	RAD3-VLV	1	010.002	M201	VG1245CL+923BGB	Ball Valve	2-Way	Valve Open	1	1	Water		3.0	0.0	0.0	7.4	200.0	Stainless Steel	Threaded	VA9203-BGB-2	24VAC On/Off	NOTE-2
12	HEAT VENT	HTVENT-VLV	1	010.002	M302	VG1245CL+923BGB	Ball Valve	2-Way	Valve Open	1	1	Water	0.7	3.0	0.0	0.4	7.4	200.0	Stainless Steel	Threaded	VA9203-BGB-2	24VAC On/Off	NOTE-4
13	HEX3.2	HX3.2V-O	1	003.001	M602	VG1245CL+943GGA	Ball Valve	2-Way	Valve Closed		1	Water	11.4	5.0	2.4	5.1	7.4	200.0	Stainless Steel	Threaded	VA9203-GGA-2Z	0-10VDC PROP	NOTE-1
14	HEX3.1	HX3.1V-O	1	004.001	M602	VG1245CL+943GGA	Ball Valve	2-Way	Valve Closed		1	Water	13.5	5.0	3.3	6.0	7.4	200.0	Stainless Steel	Threaded	VA9203-GGA-2Z	0-10VDC PROP	NOTE-1
15	FUEL OIL	TK4.1V-C	1	005.001	M604	7321GBN99N00	Ball Valve	2-Way	Valve Closed	2	2	Oil					38.6		Stainless Steel	Threaded		24VAC On/Off	NOTE-2
16	FUEL OIL	TK4.2V-C	1	005.001	M604	7321BBN64N00	Ball Valve	2-Way	Valve Closed	1	1	Oil					13.5		Stainless Steel	Threaded		24VAC On/Off	NOTE-2
17	FUEL OIL	TK4.3V-C	1	005.001	M604	7321BBN64N00	Ball Valve	2-Way	Valve Closed	1	1	Oil					13.5		Stainless Steel	Threaded		24VAC On/Off	NOTE-2

NOTES:

1. LINE SIZE IS NOT AVAILABLE IN MECHANICAL DRAWINGS. FIELD TO VERIFY LINE SIZE. VALVE IS SELECTED BASED ON FLOW DATA. FIELD TO VERIFY VALVE SELECTION BEFORE MATERIAL ORDERING.
2. FLOW (LIS) VALUE IS NOT PROVIDED IN MECHANICAL DRAWINGS. 2-POSITION VALVE IS SELECTED BASED ON AVAILBLE LINE SIZE. FIELD TO VERIFY VALVE FLOW AND LINE SIZE DATA BEFORE ORDERING.
3. FLOW VALUES PROVIDED FOR HRV-1 VALVES PH-O AND RH-O ARE VERY SMALL. 1/2" VALVES ARE SELECTED FOR THESE APPLICATION. AUTHORITY VALUES FOR 1/2" VALVES ARE NOT COMING WITHIN THE ACCEPTABLE RANGE FOR PROPER CONTROL. FIELD TO VERIFY FLOW DATA AND VALVE SELECTION BEFORE ORDERING THE VALVES.
4. FIELD TO VERIFY SIGNAL FOR HEAT VENT VALVE (HTVENT-VLV) BEFORE MATERIAL ORDERING. PROVIDED IS 2-POSITION VALVE WITH 24VAC ON/OFF SIGNAL.
5. FLOW VALUE PROVIDED FOR HEATING COIL HC1.3 IS VERY SMALL. 1/2" VALVE IS SELECTED FOR THIS APPLICATION WHICH PROVIDES BETTER VALVE AUTHORITY FOR PROPER CONTROL. FIELD TO DETERMINE LIZE SIZE, FLOW DATA FOR THE HEATING COIL HC1.3 AND VALVE SELECTION TO BE VERIFIED BEOFRE MATERIAL ORDERING.
6. NEW CONTROL VALVE IS PROVIDED FOR RADIATORS IN UPPER LEVEL (RAD-1 & RAD-2). FIELD TO VERIFY IF NEW VALVE IS REQUIRED OR EXISTING TO BE REUSED.

SECTION 8
CERTIFICATION AND TESTING

SECTION 9
MAINTENANCE

METASYS™ SYSTEM MAINTENANCE FOR IQALUIT WASTE WATER TREATMENT PLAN

Your Metasys™ system is the brain of your building. Therefore, great care must be taken to make sure it is in the best health possible.

It is our pleasure to present you a service plan for your Metasys™ that will allow you to have your building perform at it's full potential with as less disruptions as possible for years to come.

Items	Quantity of items	Frequency / years
1. Hardware & Software Inspections		
1.1 Critical Air Systems	1	1
2. Calibration of Critical Sensors		
2.1 Air Pressure Sensors	2	1

HVAC control systems are often run by programmable thermostats that schedule heating and cooling for different times of day and days of the week. Such schedules should be set to match the occupancy and activity schedules of different spaces. These schedules change over the years as building use changes, and controls schedules should change to match.

Sensors for HVAC controls, such as temperature and humidity sensors, or occupancy sensors, should be regularly checked for proper operation. Sensors that start shutting off or turning on heating or cooling at the wrong times make people too hot or too cold, and can waste energy.

Control systems that function but are not tuned according to occupant preferences may get manually disabled by them. Such systems are obviously no longer able to do their jobs, and the result is wasted energy.

Building Automation Systems & Controls

Services for equipment and supervisory controllers; operator workstations and servers; thermostats and other field devices; and pneumatic systems.

	SERVICE COMPLETE	
	BASIC	PREMIUM
DESCRIPTION	Factory recommended inspection and maintenance program designed to identify issues preventing covered systems from running efficiently. Recommendations will focus on Johnson Controls 5 Values of Planned Maintenance.	Factory recommended inspection, maintenance and repair program for customers who want budget predictability and protection from unplanned failures of covered systems.
Recommended Number of Visits	4 annual visits (3 operational, 1 comprehensive – customizable to your needs)	4 annual visits (3 operational, 1 comprehensive – customizable to your needs)
Scheduled Operational Inspections	✓	✓
Scheduled Comprehensive Maintenance and Data Backup (if applicable)	✓	✓
Scheduled Service Parts*	✓	✓
Prioritized Unscheduled Service	✓	✓
Unscheduled Repair Parts*		✓
Unscheduled Repair Labor*		✓
24/5 or 24/7 Extended Service Hours		Optional
After-Hours Emergency Call Center	✓	✓
Industry-Leading Safety Program	✓	✓
Factory-Trained Technicians	✓	✓
Dedicated Customer Service Representatives	✓	✓
Customer Portal – Online Access to Service History And Documentation	Optional	Optional

*Certain limitations apply. Contact your Johnson Controls sales representative for more details.

PRODUCTIVITY – OPTIONS

Services that will help you enhance your facility and keep it running smoothly:

- Support center database (Metasys® only)
- Software update subscriptions (Metasys only)
- Ultrasonic leak testing
- ENERGY STAR® benchmarking
- Consultative services
- Training
- Panoptix®

REMOTE MONITORING – OPTIONS

Services that use our 24/7 Remote Operations Center to identify potential problems and corrective actions:

- HVAC/BAS monitoring
- Remote operations
- Critical facility management

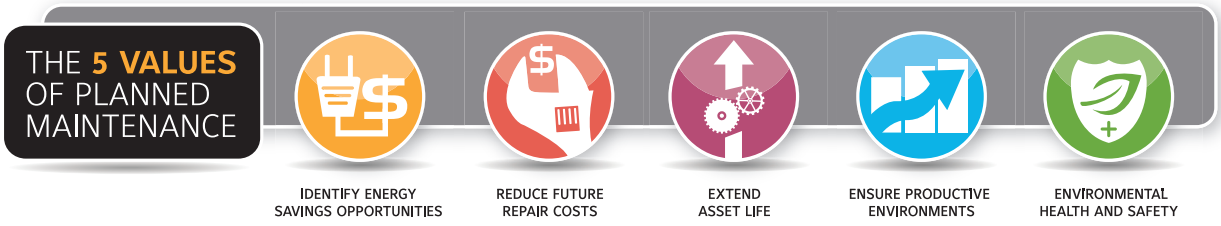

There are five reasons to choose planned maintenance: to identify energy savings opportunities, reduce future repair costs, extend asset life, ensure productive environments, and improve environmental health and safety. All of the services we perform on your controls and equipment are aligned with "The 5 Values of Planned Maintenance."

Johnson Controls

A strategy to meet your needs

The goal of an optimized maintenance strategy is to develop a sustainable maintenance program for your building automation system and controls that helps extend asset life and reduce overall facility costs. We'll develop a service strategy around your requirements, the level of service and technology you want, and the goals you want to achieve. This strategy can combine reactive, planned and predictive service support, as well as advanced technology options for monitoring and analysis.

Productivity Options

Support center database (Metasys only) – This subscription allows online access to thousands of solutions to Johnson Controls product questions, available 24/7 to any customers who want to get the most out of their BAS investment.

Software update subscriptions (Metasys only) – Stay current with Metasys revisions with a software subscription. By subscribing, you'll receive all releases of software, ensuring your system has the latest features.

Ultrasonic leak testing –** Ultrasonic leak testing can locate leaks in your pneumatic controls system that may be wasting energy and impacting the performance of your system. Our technicians will test your system, tag the leaks, and provide a report quantifying the energy and greenhouse gas savings.

ENERGY STAR benchmarking – If you are interested in better understanding your facility's energy performance, or are required to benchmark your facility due to local or state regulations, we can perform the benchmark, provide you a summary report, and keep your information up-to-date.

Consultative services and training – Upon request, our technicians can help your staff troubleshoot tough problems or conduct on-site training.

Panoptix – With the Panoptix building efficiency platform, you can review equipment performance, pinpoint wasted energy, assess effectiveness, monitor and report on carbon emissions and energy efficiency, and much more. Data is pulled from multiple systems, like Metasys®, and presented in a way that lets you act on the information.

** Pneumatic systems only.

Remote Monitoring Options

Our remote monitoring options leverage the power of our Remote Operations Center (ROC), a 5-Diamond Certified center from the Central Station Alarm Association. Less than 5% of monitoring facilities have achieved this prestigious designation.

HVAC/BAS monitoring* –** Let our ROC watch over your building automation system 24/7. This service allows you to define which HVAC/BAS alarms are important to you and how you'd like us to respond, giving you peace of mind that critical issues won't be missed whether you're in the facility or away.

Remote operations – Remote operations take HVAC/BAS monitoring to the next step – providing you with facilities operations support to assist with tasks ranging from scheduling and set-point adjustments to control strategy optimization. A great option to augment your staff after-hours or in satellite locations.

Critical facility management* –** Critical facility management delivers key benefits to owners and operators of data center facilities: higher reliability, better planning and forecasting, and lower operating costs. By connecting the mechanical and electrical systems supporting the critical load to our ROC, we can provide centralized data collection and diagnostic services, which allow our facility experts to provide recommendations to improve both capacity and performance.

*** May not be compatible with all controls systems.
Contact your Johnson Controls sales representative for more details.

Customer Portal

With a Planned Service Agreement, the customer portal is the way to view all service requests, invoices and activities for your site locations. Access reports, request service, and review past, present and future service jobs, all at the click of a button. And better yet, you can retrieve all of this information on your time, when you need it.

ENERGY STAR® is a registered trademark of the U.S. Environmental Protection Agency (EPA) and the Department of Energy (DOE)

Printed on recycled paper.

Johnson Controls, the Johnson Controls logo, Metasys® and Panoptix® are registered trademarks of Johnson Controls, Inc., or its affiliates, in the United States of America and/or other countries.

© 2013 Johnson Controls, Inc. P.O. Box 423, Milwaukee, WI 53201 Printed in USA PUBL-6644 (rev 6/13)
www.johnsoncontrols.com

November 29, 2018

Mécanique Nordique
1255 rue J.A. Bombardier
Lévis (Québec)
G7A 2P4

Project Warranty : Iqaluit WasteWater Treatment Plant Upgrade
Our File Project : 8N0Y-0079

Your control system has been installed as per the contract and specifications and calibrated by people fully trained to provide you its efficient operations. Our mission at Johnson Controls is to provide installation and maintenance services of a high quality and to your full satisfaction. The final adjustments to provide specific requirements for building occupants is provided through your building operating staff – a responsibility that requires skill and a thorough knowledge of controls and mechanical systems.

The Johnson Controls warranty in your building is for a period of one year, commencing on substantial completion. The specific warranty terms are provided in the contract and specifications.
The general terms of our warranty are as follows:

1. Johnson Controls is responsible for repair and replacement of any defective equipment or workmanship.
2. Owner is responsible for preventative maintenance, inspections, calibration, and other general maintenance tasks.
3. Warranty work will be performed during regular working hours, and is subject to availability of personnel on a first call first response basis.
4. Johnson Controls is not responsible for warranty coverage on any equipment repaired by others, abused, altered, misused, damaged by fire, flood, or act of God, or which has not been reasonably and properly maintained.
5. A service call is payable by the owner if the problem is determined to be outside the scope of warranty coverage, in which case a written description of the problem encountered and corrective work performed will be provided.

Please note, your warranty protects you against defects in material and workmanship, but we recommend Preventative Maintenance coverage in addition to your warranty. This is your assurance against subjecting your control system to neglect – neglect, which could shorten equipment life expectancy and affect warranty claims.

Johnson Controls offers planned service agreements to customers whose equipment is in warranty. The coverage includes preventative maintenance visits to inspect and calibrate the system, as well as guarantee service call response time on an around the clock basis, if desired. Seasonal adjustments may be required during the warranty period. We also offer, for an additional cost, 24-hour off-site monitoring. Alarm conditions are handled as you advise. Activity is then compiled into a biweekly report.
We thank you for selecting a Johnson Controls system for this project. If you require additional information or have any questions, please call 1-866-668-0949.

Sincerely,

Philippe Cernosek
Project Owner

SECTION 10
SOFTWARE

APPENDIX E

SPARE PART LIST

Mécanique Nordique
Plumbing
Heating
Ventillation
418 496-1109
1255 rue J.A. Bombardier, Lévis, Québec G7A 2P4 mecanique.nordique@hotmail.com

Date: 18/04/2019

WASTE WATER TREATMENT

Spare Parts

QT	ITEM	MODEL	SYSTEM
2	AHU SUMMER FILTER	25" X 20" X 2" MERV13	
2	AHU SUMMER FILTER	25" X 16" X 2" MERV13	
1	AHU SUMMER FILTER	20" X 20" X 2" MERV13	
1	AHU SUMMER FILTER	20" X 16" X 2" MERV13	
4	AHU WINTER FILTER	25" X 20" X 2" MERV8	
4	AHU WINTER FILTER	25" X 16" X 2" MERV8	
2	AHU WINTER FILTER	20" X 20" X 2" MERV8	
2	AHU WINTER FILTER	20" X 16" X 2" MERV8	
20L	CORROSION INHIBITOR	FERROQUEST FQ7103	
20L	GLYCOL	DOWFROST HD	
10	OIL FILTERS	1 A-25B OIL FILTER	
20	SIDE STREAM FILTER	CARTRIDGE FILTER 24CM 10 MICRON	

9. Exploded views

9.1 Type VL, 56J fractional hp motor (less than 1 hp)

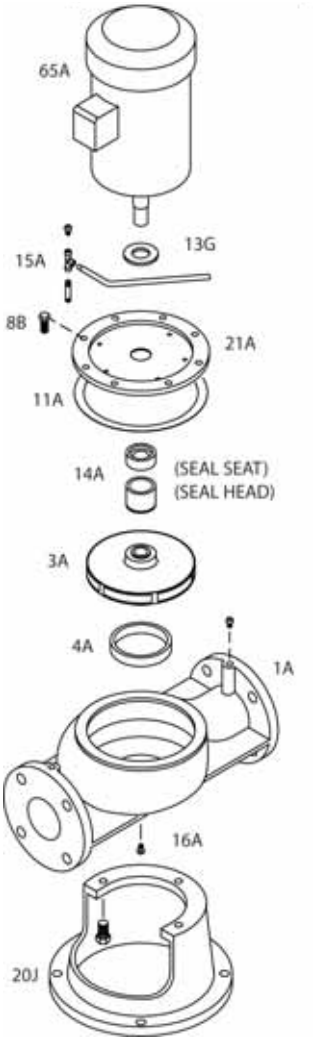

TM05 4877 2612

Pos.	Description
1A	Volute
3A*	Impeller
4A*	Case wear ring
8B	Volute capscrew
11A*	Volute gasket
13G	Slinger
14A*	Seal assembly
15A	Recirc tubing
16A	Pipe plug
20J	Cast iron stand
21A	Motor bracket
65A	Motor, 56J frame

* Recommended spare parts

9.2 Type VL-JM, integral hp motor (1 hp or greater)

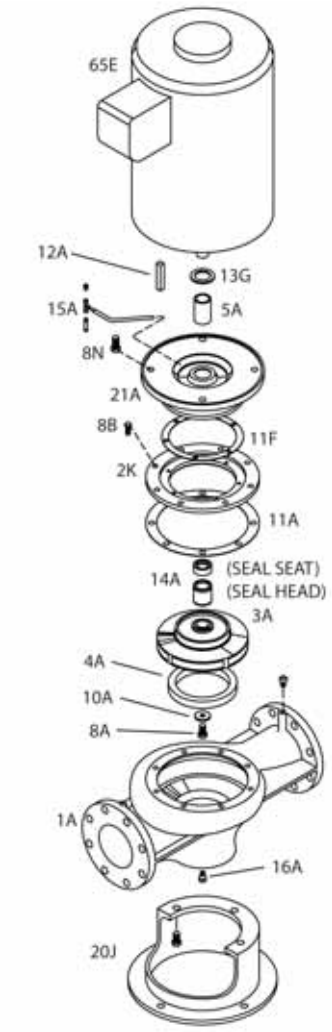

TM05 4878 2612

Pos.	Description
1A	Volute
2K	Back plate
3A*	Impeller
4A*	Case wear ring
5A*	Shaft sleeve
8A*	Impeller screw
8B	Volute screw
8N	Motor screw
10A*	Impeller washer
11A*	Volute gasket
11F*	Bracket gasket
12A*	Impeller key
13G	Slinger
14A*	Seal assembly
15A	Recirc tubing
16A	Pipe plug
20J	Cast iron stand
21A	Motor bracket
65E	Motor, JM frame

* Recommended spare parts

9.3 Type VL-JP, motor (packed pumps)

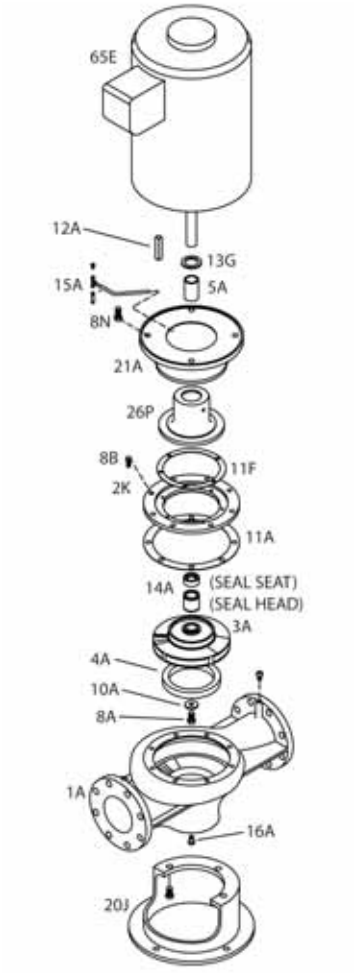

TM05 4879 0213

Pos.	Description
1A	Volute
2K	Back plate
3A*	Impeller
4A*	Case wear ring
5A*	Shaft sleeve
8A*	Impeller screw
8B	Volute screw
8N	Motor screw
10A*	Impeller washer
11A*	Volute gasket
11F*	Bracket gasket
12A*	Impeller key
13G	Slinger
14A*	Seal assembly
15A	Recirc tubing
16A	Pipe plug
20J	Cast iron stand
21A	Motor bracket
26P	Seal cap
65E	Motor, JM frame

* Recommended spare parts

9.4 Type VLS, cross section and parts list

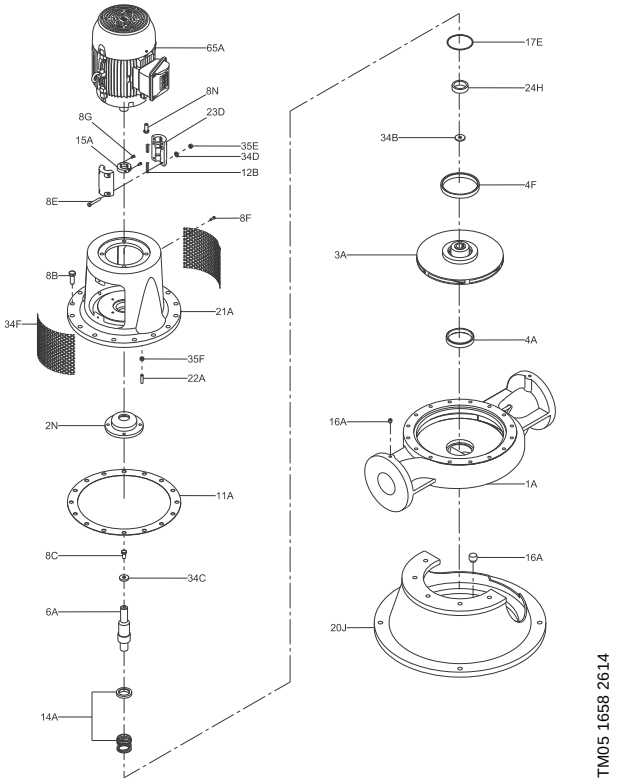

TM05 1658 2614

Pos.	Description
1A	Volute
2N	Seal cap
3A*	Impeller
4A*	Case wear ring
4F	Balance ring
6A	Pump shaft
8B	Volute screw
8C	Pump shaft screw
8E	Coupling screw
8F	Coupling guard screw
8G	Locating ring screw
8N	Motor screw
11A*	Volute gasket
12B	Coupling key
14A*	Seal assembly
15A	Locating ring
16A	Pipe plug
17E	Seal cap o-ring
20J	Cast iron stand
21A	Motor bracket
22A	Seal cap studs
23D	Coupling halves
24H	Bushing
34B*	Impeller washer
34C	Pump shaft washer
34D	Coupling Washer
34F	Coupling guard
35E	Coupling Nut
35F	Seal cap nut
65A	Motor

* Recommended spare parts

APPENDIX F

CONTACT SERVICE INFORMATION

OWNER MANUAL

Project: **IQALUIT WASTE WATER TREATMENT PLANT UPGRADES**

Owner: **CITY OF IQALUIT**
901, Nunavut Drive, PO Box 460
Iqaluit, (Nunavut)
X0A 0H0
Phone: (867) 979-5600
Fax: (867) 979-5922

Consulting Engineer: **NUNAMI STANTEC LIMITED**
P.O. Box 188
Rankin Inlet (Nunavut)
X0C 0G0
Phone: (867) 645-2805
Fax: (867) 645-2063

Gen. Contractor: **Mécanique Nordique**
1255, rue J.A. Bombardier
Lévis, (Québec)
G7A 2P4
Phone: (418) 496-1109
Fax: (418) 496-3803

Controls Contractor: **Johnson Controls**
765, avenue Godin
Québec, (Québec)
G1M 2W8
Phone: (418) 681-0085
Fax: (418) 681-3599

LIST OF SUPPLIERS

SUPPLIERS	CONTACT INFORMATION
JOHNSON EQUIPMENT SETRA EQUIPMENT	**JOHNSON CONTROLS** 765, avenue Godin Québec, (Québec) G1M 2W8 Phone: 418 681-0085 Fax: 418 681-3599
SYSTEM SENSOR FUNCTIONAL DEVICES INC.	**KELE** 3300 Brother Boulevard Memphis, TN 38133 Phone: 877 826-9045 Fax: 800 284-5353
DWYER	**FURNACO INTERNATIONAL** 926, rue Aubry St-Jean sur Richelieu, (Québec) J3B 2H9 Phone: 450 347-2111 Fax: 450 347-2117

APPENDIX G

WARRANTIES & REPORTS

FOR INDIVIDUAL EQUIPMENT WARRANTY INFORMATION REFER TO INDIVIDUAL EQUIPMENT SHOP DRAWINGS AND INSTALLATION, OPERATING, AND MAINTENANCE MANUALS WITHIN THE CONTRACTOR ASSEMBLED O&M MANUAL

Mécanique Nordique
Plumbing
Heating
Ventillation
mecanique.nordique@hotmail.com

1255 Rue J.A. Bombardier Lévis Quebec G7A 2P4
Tél : (418) 496-1109 Fax : (418) 496-3803

Lévis 2018 november 24

City of Iqaluit

WARRANTY LETTER
Project

Waste Water Treatement Upgrade

Iqaluit Nu

With th following Mécanique Nordique Inc warranty that all material and work for Plumbing , Heating , Ventilation and Control system are conform with drawings and specs for this project and warranty materials and labor for one year start with date of project acceptance.

_____

Martin Boucher
Président

APPENDIX H

BUILDING HVAC CONTROLS SEQUENCES OF OPERATION

Part 1 General

1.1 REFERENCES

.1 Canadian Standards Association (CSA)

.1 CSA C22.2-94. 0-M91, Canadian Electrical Code, Part II, General Requirements.

.2 CAN/CSA-Z234.1-89, Canadian Metric Practice Guide.

.2 American National Standards Institute (ANSI)

.1 ANSI/ISAS5.5-1985, Graphic Symbols for Process Displays.

.2 ANSI/IEEE260-1978, Letter Symbols for SI and Certain Other Units of Measurements.

1.2 DESIGN DOCUMENTATION

.1 Design documentation for each system to include, as a minimum:

.1 Narrative type of Sequence of Operation.

.2 Control Description Logic (CDL).

.3 Input/Output Summary Schedules.

.4 Schematics.

Part 2 Products

2.1 NOT USED

Part 3 Execution

3.1 GENERAL

.1 Provide all wiring, conduit, relays, starters, electronics, etc., not indicated or specified but required for a complete and functional automatic control system.

.2 Location of controllers and panels not indicated or not as per drawing locations to be approved by Engineer prior to installation.

.3 All scales to be in SI units.

.4 Operating range to suit application range.

3.2 INSTALLATION

.1 Install all systems and hardware in accordance with the requirements of this specification, good controls practice and the requirements of Division 26.

.2 Install all equipment, components so that manufacturer's and CSA labels are visible and legible after commissioning is complete.

.3 Follow building lines.

.4 Run all systems exposed and do not pass thru or touch un-heated ducts or enclosures.

.5 Locate thermostat sensors 1500 mm above floor as indicated. When conflict occurs follow Engineer's instructions.

.6 All wiring to be in conduit. Wiring,conduit connections and fittings to be as per the requirements of Division 26.

.7 Wiring of line voltage mechanical equipment as per Division 26.

3.3 ELECTRICAL GENERAL

.1 Complete installation in accordance with requirements of:

.1 Division 26, this specification.

.2 ANSI/NFPA 70-1996SB.

.3 ANSI C2-1997.

.2 Fully enclose or properly guard electrical wiring, terminal blocks, all high voltage above 70 V contacts and mark to prevent accidental injury.

.3 Conform to all manufacturer's recommendations for storage, handling and installation.

.4 Check all factory connections and joints. Tighten where necessary to ensure continuity.

.5 Install electrical equipment between 1000 and 2000 mm above finished floor wherever possible and adjacent to related equipment.

.6 Shield and mark all live parts "LIVE 120 VOLTS" or other appropriate voltage.

.7 Holes through exterior wall and roofs: flash and make weatherproof.

.8 All digital controllers to be connected to dedicated surge and transient protected power supply. Reference Division 26.

3.4 CONTROL LOGIC - HW SYSTEM

.1 Building heating water system includes three modulating oil fired hydronic heating water boilers, primary recirculation pumps, packaged glycol fill system and secondary heating water pumps.

.2 The primary heating system consists of 2 glycol boilers B-1 and B-2 each complete with a circulation pump P-1.1 and P-1.2 respectively.

.3 Each boiler is supplied with a digital universal controller. The boiler burner includes local burner management controls that control boiler firing. The controls contractor shall provide boiler staging, boiler circulation pump control and boiler setpoint reset and all safety or operational interlocks to the boiler burner as required.

.4 Primary HW System

.1 The primary heating system is to be enabled when the outdoor air temperature is below 16 degC. An anti short cycle time delay is to be provided.

.2 The heating boilers shall operate in cascade sequence and rotate while maintaining modulation of each boiler as follows:

.1 Once the lead boiler firing rate is greater than 95% for x minutes (time to be determined during commissioning), the lag boiler circulation pump and associated boiler shall be enabled.

.2 The boilers shall be unloaded in reverse order when their firing rate is less than minimum firing rate for x minutes (time to be determined during commissioning).

.3 Provide a dead band between enabling and disabling of the boiler. Dead band to be determined during commissioning to prevent excessive cycling.

.4 Only after the pump status is proven can the associated boiler be enabled.

.5 When a boiler is disabled, its circulation pump shall continue to operate for 5 minutes to dissipate any residual heat in the boiler.

.6 Should the running boiler or circulation pump fail, the other boiler and pump shall be enabled and the previous boiler circulation pump and boiler shall be disabled. Upon a failure of the pump or associated boiler, an alarm shall be generated at the OWS.

.7 The lead boiler is to rotate on a duty run time every week.

.8 Boiler burners to operate using packaged boiler operating controls. Packaged controls modulate burner to satisfy HWST setpoint.

.9 The reset ratio and set points are to be adjustable by graphic operator interface at the OWS rather than at the boiler controller. The HWS temperature is to reset based on O/A temp. Initial HWS reset schedule setpoints:
At OAT < -30 deg C, HWS = 82 deg.C
At OAT > +16 deg C, HWS = 60 deg C

.10 When lead boiler energized, associated boiler primary circulation pump energized. Primary pump status by pump current. On failure of pump, indicate alarm at OWS. Boiler controller to sequence to next scheduled boiler.

.11 Low water cutoff (LWCO) to disable boiler in event of low heating water level.

.12 High limit controller with manual reset to disable boiler in event of high heating water temperature. Setpoint = 93 deg C.

.13 Indicate boiler inlet and outlet water temperatures, temperature differential, set point temperatures, set point differential, outdoor air temperature, and reset temperatures at OWS.

.14 Indicate trouble at OWS in event that HWS temperature is 10 deg C less than HWST setpoint for perdiod greater than 10 minutes.

.5 Secondary HW System

.1 The secondary heating system consists of two pumps sized for 100%

of their respective load. The pump speeds are controlled by variable frequency drive complete with BACnet cards (allow for 5 mapped points) and are normally activated via the control system when the primary heating system is enabled.

.2 Secondary HW Pumps to operate lead/standby. Lead secondary pump to start when primary HW enabled. See Primary HW controls. Lead secondary pumps to alternate on total run time duty cycle. Alternate main pump after 168hrs operation. Indicate transfer.

.3 On pump start lead secondary HW pump to start at 30% flow condition. Modulate pump speed to maintain secondary HWST at reset HW supply temperature and secondary HWRT at maximum 16.7 deg C temperature differential to maximum pump speed 1800rpm. In event of lead HW pump failure auto-change to lag pump and indicate failure.

.4 In event of lead pump and lag pump failure or failure of either pump when both pumps to be operating indicate failure and send signal to station process control PLC.

.5 In event of lead pump failure as sensed by current sensor, alarm lead pump failure at pump sequencer and energize lag pump.

.6 Pumps run continuous until outdoor air temperature greater than 16 deg C for 2 hours. Minimum deadband = 3 deg C.

.6 Terminal Heating

.1 Unit Heaters

.1 Line voltage thermostat cycles blower to satisfy thermostat setpoint.

.2 Initial setpoint = 10 deg C.

.2 Radiation (perimeter baseboards):

.1 Low Voltage thermostat cycles normally open two position zone valve to satisfy thermostat setpoint.

.2 Initial setpoint = 20 deg C.

.3 TWAS Tank Vent heat trace

.1 Normally open two-position zone valve cycles opens when outdoor air temp less than 1 deg C. An anti short cycle time delay is to be provided.

.4 Mech Room Heating Coil

.1 Normally closed two-position zone valve cycles opens when room temperature below 10 degC.

.2 When room temperature is below thermostat heating setpoint, intially set at 10 deg C, energize Mech room cooling.

.1 Energize Mech Room cooling fan

.2 EMCS to modulate normally closed two way control valve

to maintain minimum SAT setpoint. Inital setpoint = 10 deg C.

3.5 CONTROL LOGIC - FUEL SYSTEM

.1 General:

.1 Fuel oil for the WWTP heating plant and the generator is transfered from a single above ground primary fuel oil tank via two (2) fuel oil transfer pumps P-4.1 and P-4.2 to two (2) fuel oil auxilliary day tanks- one for heating plant and second tank for the generator..

.2 The system shall cycle based on fuel demand of either of the two FO day tanks. Upon system start up, the anti-siphon valve and respective tank fuel line solenoid valves open. The lead pump shall operate continuously with auto transfer on lead pump failure. If fuel demand cannot be met after more than 15min, enable the second FO pump. Once the fuel load is met, close anti-siphon valve and tank fuel line solenoid valves, disable the pumps.

.3 The fuel oil transfer pumps operate as lead/lag with the pumps alternating after each duty cycle.

.4 The fuel oil pump status is to monitored and in event of lead pump failure autochange to the lag pump and alarm failure to the OWS.

.5 If both the lead and lag pumps fail, alarm to the OWS and alarm to process control PLC.

.6 If the second tank level control calls for fuel while the lead pump is already ON, delay second tank fill operation until first tank fill complete. FO transfer pump OFF when all the tank levels satisfied.

.7 On high fuel oil level at any day tank, a hardwired override shall shut the transfer pumps off. The pumps shall not restart until the high limit condition is corrected.

.8 On low or high fuel oil level a critical alarm shall be generated. Alarm conditions shall be monitored by the process control PLC.

.9 In event of fuel leak at either auxilliary day tank as sensed by leak detection device, alarm trouble at OWS.

3.6 CONTROL LOGIC - WATER SUPPLY & RECIRCULATION SYSTEM

.1 A new piped potable water system will be provided for the WWTP. The WWTP water supply system includes two domestic water recirculation pumps and a hydronic indirect heat injection system.

.2 Water Supply Recirculation:

.1 Water recirculation pumps are energized and run continuously during the winter months and shoulder seasons. Recirculation pumps are not required when MONTH equals June, July or August.

.2 Pumps P-3.1 and pump P-3.2 operate as duty/standby pumps. Only one (1) pump operates at any time.

.3 Duty pump alternates weekly every 168 hours.

.4 Indicate pump status at OWS.

.5 In event of duty pump failure as sensed by CT current sensor, EMCS to energize standby pump and alarm trouble at OWS.

.6 Indicate entering water temperature and leaving water temperaure at OWS.

.7 In event that leaving water temperature less than 5 deg C (user adjustable at OWS), alarm at OWS.

.3 Water Supply Recirculation Heat Injection System

.1 The heat injection system includes a double walled stainless steel plate heat exchanger designated HEX-3.2 and two (2) injection pumps P-3.4 and P-3.5. The intent is to sidestream and heat recirculation water that is then blended with reciculation water to ensure that recirculation lines does not freeze. The heat injection pumps are interlocked with pumps P-3.1 and P-3.2.

.2 Pumps P-3.4 and P-3.5 operate as duty/standby pumps. Only one (1) pump operates at any time.

.3 Duty pump alternates weekly every 168 hours.

.4 Indicate pump status at OWS

.5 In event of duty pump failure as sensed by CT current sensor, EMCS to energize standby pump and alarm trouble at OWS.

.6 2-way modulating control valve installed on hot side of HEX-3.2 modulates HW flow through HEX-3.2 to maintain water supply recirculation temperature. Initial setpoint = 5 deg C.

.7 Alarm trouble at OWS if water supply return temperature less than 3 deg C.

3.7 CONTROL LOGIC - DOMESTIC HOT WATER and BOOSTER SYSTEM

.1 Domestic Hot Water

.1 Packaged controls on oil fired domestic hot water heater to cycle burner to satisfy DHWH setpoint. Initial setpoint = 60 deg C.

.2 Indicate DHW tank temperature at OWS

.3 DHWR pump P-3.3 to be interlocked with HRV-1. P-3.3 ON when HRV-1 ON.

.4 Indicate DHWH pump status at OWS. In event of P-3.3 failure as sensed by CT sensor, indicate failure at OWS

.5 Alarm trouble at OWS if DHW supply temperature over 65degC for 20 minutes.

.6 Lock out DHWH and alarm trouble at OWS if DHWH temperature above 65degC for 5 minutes.

.2 DHW Booster

.1 HEX-3.1 is installed to boost the DHW temperature to the primary filters. The system includes a flow switch, normal closed modulating two-way control valve and a temperature transmitter.

.2 On call for Primary Filter DHW by PLC, flow switch installed on DHW supply proves DHW flow to filters. On proof of flow, normal closed control valve energized and modulates HW flow through hot side of heat exchanger to achieve DHW supply temperature to Primary filter. Initial setpoint = 80 deg C.

.3 Indicate control valve status and DHW boost temperature at OWS.

3.8 CONTROL LOGIC - SUMP PUMPS

.1 General:

.1 Existing sump pumps P-2.1, P-2.2, P-2.3 and P-2.4 are existing submersible pumps that will be replaced as part of this Contract. The existing pump control panel for each pair of pumps will also be replaced.

.2 Sump Pumps P-2.5 and P-2.6 are new submersible sump pumps. New control panels are to be provided for each pair of sump pumps.

.2 Sump pumps operate as duty/standby. Duty pump switches after each run cycle.

.3 Sump pump controls includes four (4) level switches.

.1 Duty pump ON when Pump Start sump level switch enabled.

.2 Duty pump OFF when Pump Stop sump level switch enabled.

.3 Standby pump ON when 3rd sump level switch (high level) enabled so both pumps ON. Both pump OFF when PUMP Stop sump level switch enabled.

.4 Alarm high level when sump high level switch enabled.

.4 Indicate sump pump status at OWS.

3.9 CONTROL LOGIC - VENTILATION

.1 General:

.1 Ventilation system includes AHU-2, AHU-3 (existing), HRV-1, CF-1 and CF-2

.2 AHU-2 is custom built 100% outdoor air unit complete with two (2) VFD type fans, an air-to-air fixed plate heat exchanger, face and bypass dampers, preheat and reheat hydronic heating coils and exhaust and outdoor air dampers. The unit is installed in above the MBBR cells and provides fresh air to the unclassified areas including the MBBR and upper DAF tank area, upper level mezzanine, Belt Filter Press area, polymer mizing area, process blower area, lower DAF tank area, and the sludge trailer room.

.3 AHU-3 is an existing custom built 100% outdoor air unit complete with two (2) two-speed fans, an air-to-air fixed plate heat exchanger, defrost bypass dampers, a reheat hydronic heating coil and exhaust and outdoor air dampers. The unit is installed on the main floor of the existing headworks building and services the existing headworks room. The controls contractor shall migrate the existing controls to the new control system.

.4 HRV-1 is a light commercial packaged heat recovery ventilator installed on the secondfloor above the office/lab area.

.5 CF-1: Economizer cooling system consisting of in-line cooling fan, and modulating control dampers.

.6 CF-2: Economizer cooling system consisting of in-line cooling fan, and modulating control dampers.

.2 AHU-2

.1 AHU-2 air system operates continuously. AHU-2 shall normally operate with the supply fans and exhaust fan at 50% speed to provide a minimum of 3 ACH of continuous ventilation.

.2 When the AHU-2 area space lights are ON, or when the gas detection system is activated, or when the outside air temperature is above 10° C, the supply and exhaust air fans shall be ramped up to 100% to provide 6 ACH of continuous ventilation. Final fan speeds to be determined during commissioning.

.3 Preliminary calculations indicate that there may be condensation issues at lower air change rates. In the event that condensation is a problem at 3 ACH, Contractor to ramp up lower fan speed so that condensation is avoided.

.4 Gas detection by PLC contractor. Interlock PLC I/O with DDC AHU controls.

.5 Upon system start-up, the unit outdoor air and exhaust air dampers shall be energized open. Once the damper end switches indicates that the dampers are full open, the EMCS shall start the exhaust fan to 3 ACH/50% airflow. Once Exhaust fan status proven, supply fan to start.

.6 The EMCS system shall modulate the exhaust fan as required to maintain the space pressure under positive pressure of 25 Pa (field adjustable) relative to ambient. Final fan speed to be determined during comissioning.

.7 In event of either supply fan failure or exhaust fan failure, alarm trouble at OWS.

.8 Show fan status at OWS.

.9 Show air change per hour (ACH) rate at OWS.

.10 Show relative space pressure at OWS.

.11 Show various air filter DP values at OWS.

.12 Preheat Coil:

.1 Pre-heat coil recirculation pump P-1.6 ON when OAT less than 5 dec C.

.2 EMCS to modulate two way control valve to maintain mimum SAT setpoint after heat transfer core. Inital setpoint = -10C.

.13 Reheat Coil:

.1 EMCS to modulate two way control valve to maintain SAT setpoint to space. Inital setpoint = +10C.

.14 In event that SAT temperature is less than 5 deg C as sensed by duct mounted temperature sensor, alarm trouble at OWS.

.15 AHU heat transfer core bypass dampers are normally closed (full heat recovery mode). EMCS to open dampers fully when OAT greater than 5 deg C (partial heat recovery). When OAT greater than 10 deg C, close heat core face dampers (no heat recovery). Provide anti short-cycle time delay.

.3 AHU-3

.1 Existing AHU-3 consists of a two speed supply and return air fan, reheat coil, defrost bypass, heat recovery section and filter section. AHU-3 is controlled from the current WWTP PLC system located in the office. The Controls Contractor under this Contract shall migrate the existing AHU-3 control field devices to the new WWTP DDC system.

.2 AHU-3 air system to operates continuously. AHU-3 shall normally operate with the supply fans and exhaust fan at 50% speed to provide 6 ACH of continuous ventilation.

.3 During occupied period when existing headworks area lights are ON or when the gas detection is activated, or when the outside air temperature is above 10°C, the supply fan and exhaust fan shall switch to speed 2 (100% speed) to provide 12 ACH of continuous ventilation. Final fan speeds to be determined during commissioning.

.4 Gas detection by PLC contractor. Interlock PLC I/O with DDC AHU controls.

.5 In event of either supply fan failure or exhaust fan failure, alarm trouble at OWS.

.6 Show fan status at OWS.

.7 Show air change per hour (ACH) rate at OWS.

.8 Show relative space pressure at OWS.

.9 Show air filter DP at OWS.

.10 AHU-3 heat transfer core "Defrost Mode" bypass dampers are normally closed (full air flow through heat exchanger). EMCS to switch

AHU-3 to Defrost Mode when supply air temperature down stream of HEX and upstream of reheat coil is less 5 deg C as sensed by averaging type duct temperature sensor. In "Defrost Mode", EMCS modulates AHU-3 Face and Bypass dampers to maintain exhaust air temperature above 2 deg C.

.11 Reheat Coil

.1 Provide new 3-way control valve for AHU-3.

.2 EMCS to modulate AHU-3 reheat coil 3-way control valve to satisfy SAT temperature setpoint. Initial setpoint = 10C.

.12 In event that SAT temperature is less than 5 deg C as sensed by duct mounted averaging type temperature sensor, alarm trouble at OWS.

.4 Mechanical Room Cooling

.1 The air system provides economizer free cooling to Mechanical Room.

.2 When room temperature is above thermostat cooling setpoint, intially set at 24 deg C, energize cooling system.

.3 On call for cooling, energize cooling fan, modulate exhaust air, return air and outdoor air dampers to satisfy T-stat.

.4 If the discharge air temp is less than 5degC for greater than five(5) minutes, lock out the cooling fan, de-energize dampers and alarm at OWS. The alarm suppression time is to be adjustable at the OWS.

.5 If the Mechanical Room temperature exceeds 38degC for longer than 15min, alarm to the OWS.

.6 On a high-pressure drop at the filters alarm to the OWS. Set point to befield determined and adjustable at OWS.

.5 Electrical Room Cooling

.1 As per mechanical room cooling

.6 Generator Cooling

.1 The EG has been provided with a ventilation system to provide economizer free cooling while the generator is operating and the UH provides heating while the generator is OFF. When the generator starts the UH is to be locked out and the two position combustion air damper opens fully. If the damper does not open alarm to the OWS and open the main O/A dampers to minimum 15% open.

.2 While the generator is operating, the O/A, R/A and E/A dampers are to modulate in economizer mixing mode to maintain both the generator radiator discharge air temperature at a maximum 30degC and also the space temperature at set point.

.3 If the generator is ON and the space temp is above 38degC, alarm to the OWS and signal PLC controller.

.4 After the generator is staged OFF, if the space temperature is less than

30deg C, dampers to normal positions. If the space temperature is greater than 30degC, continue to enable and modulate the economizer dampers to maintain space temperature at a maximum 30degC. After cool down is completed dampers to normal position.

.7 HRV-1

.1 HRV provides fresh air and exhaust air for the normally occupied area of the WWTP including the office, washroom and laboratory. The HRV system includes the HRV, outdoor air 2-position normal closed damper, hydronic pre-heat heating coil and hydronic re-heat heating coil.

.2 Time Schedule: Schedule to be fully adjustable at the OWS. HRV-1 operates based on a 365 day time based schedule. Initial time-based setpoint (confirm with Owner):

.1 HRV-1 ON: Mon-Fri @ 0730hrs

.2 HRV-1 OFF: Mon-Fri @ 1700hrs, Sat-Sun

.3 On start-up, HRV outdoor air damper opens fully. When damper position proven by end-switch, energize HRV.

.4 Preheat Coil

.1 EMCS to modulate two way control valve to maintain minimum SAT setpoint into heat transfer core. Inital setpoint = -10 deg C.

.5 Reheat Coil

.1 EMCS to modulate two way control valve to maintain minimum SAT setpoint. Inital setpoint = 18 deg C.

.6 In event that SAT temperature is less than 10 deg C as sensed by duct mounted averaging type temperature sensor, alarm trouble at OWS.

3.10 LOW BUILDING TEMPERATURE ALARM

.1 In event of low building temperature as sensed by temperature sensor and 15 minute time delay, signal process control PLC.

.2 Initial setpoint = 5 deg C

.3 Low temperature sensors located in Mech room, Lower DAF tank area, and near HEX-3.1 on upper level.

END OF SECTION