**Electrical, Instrumentation and Controls Operation & Maintenance Manual**

**for the Iqaluit Wastewater Treatment Plant**

**Iqaluit, Nunavut**

**Expected Year of Completion:** 2020

**Original Scope:** Design and upgrade existing Wastewater Treatment Plant to meet current and future demands.

**This manual has been updated to include:**

| Date | Description of Change |
|---|---|
| 2019-Mar-01 | First Draft – Primary Treatment |
| 2020-Jan-27 | Second Draft – Primary Treatment, Secondary Treatment and Solids Handling. |
| 2020-Apr-24 | Final Compiled Manual |
| | |
| | |
| | |
| | |
| | |
| | |
| | |
| | |
| | |

**CHAPTER 1**

**TABLE OF CONTENTS**

**1. INTRODUCTION ..... 1.1**
1.1 USE OF THE MANUAL ..... 1.1
1.2 PROJECT TEAM ..... 1.1

# CHAPTER 1

# 1. INTRODUCTION

## 1.1 USE OF THE MANUAL

The discussion in this document includes the background and design data for the Electrical, Instrumentation and Controls included in the Iqaluit Wastewater Treatment Plant only. Refer to the Architectural and Structural, Building Mechanical and Process Operation and Maintenance Manuals for information on those systems.

## 1.2 PROJECT TEAM

| | |
|---|---|
| **Project Owner:** | **City of Iqaluit**<br>Building 901,<br>PO Box 460,<br>Iqaluit, NU<br>X0A 0H0<br><br>Matthew Hamp<br>Project Manager |
| **Project Management:** | **Colliers Project Leaders**<br>Suite 700, 150 Isabella Street<br>Ottawa, ON<br>K1S 1V7<br><br>Charles Kretch<br>Project Manager |
| **Consultant:** | **Nunami Stantec Limited**<br>1880C Nobel House<br>Iqaluit, NU<br>X0A 0H0<br><br>Glenn Prosko<br>Project Manager |
| **Contractor:** | **Kudik Construction Ltd**<br>1519 Federal Rd.<br>Iqaluit, NU<br>X0A 0H0<br><br>Sandra Rousseau<br>Project Manager |

**CHAPTER 2**

**TABLE OF CONTENTS**

## 2. INDEX

**1. INTRODUCTION ..... 1.1**
1.1 USE OF THE MANUAL ..... 1.1
1.2 PROJECT TEAM ..... 1.1

**CHAPTER 2 ..... 1.1**

**2. INDEX ..... 2.1**

**CHAPTER 3 ..... 2-1**

**3. BACKGROUND AND DESIGN DATA ..... 3-1**
3.1 PRIOR FACILITIES ..... 3-1
3.2 NEW FACILITIES ..... 3-2
3.2.1 Electrical (General) ..... 3-2
3.2.1.1 Electrical Wiring ..... 3-2
3.2.1.2 Power Distribution Systems ..... 3-2
3.2.1.3 Motor Control Centre – 1 (MCC-1) and 2 (MCC-2) ..... 3-3
3.2.1.4 Distribution Panel 6B ..... 3-3
3.2.1.5 Distribution Panel 2A ..... 3-3
3.2.1.6 Distribution Panel 2B ..... 3-3
3.2.1.7 Distribution Panel 2C ..... 3-3
3.2.1.8 Distribution Panel 4A ..... 3-3
3.2.2 Process Controls and Alarms ..... 3-3
3.2.2.1 Wastewater Treatment Process Control ..... 3-4
3.2.2.2 Telecommunications/Alarm Dialer ..... 3-4
3.2.2.3 WWTP Gas Detection ..... 3-5
3.2.2.4 Instrumentation and Controls Upgrades ..... 3-5

**4. SCHEMATICS AND FUNCTIONAL DATA ..... 4.1**
4.1 GENERAL ..... 4.1
4.2 POWER DISTRIBUTION SCHEMATIC ..... 4.1
4.3 INSTRUMENTS ..... 4.3
4.4 MOTOR CONTROL CENTRE ..... 4.17

**5. COMPONENT DETAILS ..... 5.1**
5.1 GENERAL OVERVIEW ..... 5.1
5.2 POWER DISTRIBUTION SYSTEM ..... 5.1
5.3 PLC CONTROL SCHEMATIC ..... 5.2
5.4 MOTOR CONTROL CENTRE ..... 5.13

**6. OPERATING PROCEDURES ..... 6.1**
6.1 GENERAL ..... 6.1
6.2 FACILITY POWER AND STANDBY POWER SYSTEM ..... 6.1
6.2.1 Controls ..... 6.1
6.2.1.1 Generator ..... 6.1
6.2.1.2 Transfer Switch ..... 6.1
6.2.1.3 Ventilation Louvres ..... 6.1
6.2.2 Emergency Generator ..... 6.2
6.2.2.1 Automatic Operation ..... 6.2
6.2.2.2 Manual Operation ..... 6.2
6.2.2.3 Emergency Stop ..... 6.2
6.2.3 Transfer Switch ..... 6.2
6.2.3.1 Automatic Operation ..... 6.2
6.2.3.2 Test ..... 6.2
6.2.3.3 Alternate Test Procedure ..... 6.2

**7. MAINTENANCE PROCEDURES AND SERVICE INFORMATION ..... 7.1**
7.1 GENERAL ..... 7.1
7.1.1 Keep It Clean ..... 7.1
7.1.2 Keep It Tight ..... 7.1
7.1.3 Renewal Parts ..... 7.1
7.1.4 Parts and Equipment Ordering Procedure ..... 7.2
7.1.5 Scheduled Preventive Maintenance Program ..... 7.2
7.2 MAINTENANCE SCHEDULE ..... 7.2
7.3 MAINTENANCE MANUALS ..... 7.2
7.4 SPARE PARTS LIST ..... 7.3

**8. TESTING AND CERTIFICATION ..... 8.1**

**9. MANUFACTURER DATA AND SERVICE INFORMATION ..... 9.1**

**LIST OF APPENDICES**

**APPENDIX A – AS-BUILT DRAWINGS**

**APPENDIX B – APPROVED SHOP DRAWINGS**

**APPENDIX C – MAINTENANCE SCHEDULE**

**APPENDIX D – EQUIPMENT MAINTENANCE MANUALS**

**APPENDIX E – SPARE PART LIST**

**APPENDIX F – CONTACT SERVICE INFORMATION**

**APPENDIX G – WARRANTIES**

# CHAPTER 3

# 3. BACKGROUND AND DESIGN DATA

## 3.1 PRIOR FACILITIES

Wastewater management in Iqaluit dates back to 1964 when a sanitary sewer outfall, made of five pipes, discharged raw sewage directly onto the beaches of the community of Frobisher Bay, as it was called back then. Shoreline discharge of raw sewage lasted for 12 years when the construction of several lift stations provided the means to pump sewage to a macerator system at the head of Koojesse Inlet. At the same time, a holding pond was built on the tidal plain at the head of the inlet. This facility operated successfully for several decades. However, several overflow and breaching events demanded improvements in the earth structures, and the perimeter drainage of the facility. The lagoon performed well improvements in the earth structures, and the perimeter drainage of the facility. The lagoon performed well as a primary treatment facility, with a continuous discharge. Effluent quality from the lagoon systems varied significantly over the course of the year because the only process at work in the winter months was sedimentation. In the early 90's, regulatory expectations prompted the City to complete an engineering feasibility study on improving the treatment system. The first attempt to implement a secondary treatment for Iqaluit was a design-build contract that was awarded in 1998 to a contractor that selected a membrane bioreactor (MBR) process. Unfortunately, the inexperience of the design builder in northern wastewater treatment became evident by mid-1999. An evaluation of the incomplete sewage treatment plant was performed in 2002 towards conducting remedial work. Phase 1 of the remedial work involved building the primary treatment system in an addition to the original building, and this work was completed in 2006. The following upgrades were implemented at that time:

- All electrical systems installed within the facility were both code compliant and energy efficient. Electrical distribution was sized to accommodate the as-built requirements and future expansion of the treatment systems and/or pumping requirements of the facility.
- The plant electrical and controls system wiring was provided by Teck cabling or wiring contained in conduit.
- The electrical service was provided from the existing Main Distribution Panel (MDP), located in the lower level Motor Control Centre (MCC). Power was distributed from existing MDP through two 3P 200A circuit breakers. One breaker fed the MCC-2, located in Upper Level Electrical Room 3. The other breaker fed panel 6B and panel 2B also located in Upper Level Electrical Room 3. MCC-2 was configured to operate various process and mechanical equipment.
- A 347/600 V, 42-circuit distribution panel feeds the 347/600 V loads. The 347/600 V loads included exterior and interior lighting for WWTP, the headworks hoist and the hot FEW booster heater. A 3P-50A circuit breaker fed transformer TX 2, which feeds distribution panel 2B.

- A 120/208 V, 42-circuit distribution panel powered various single-phase headwork's components.
- The overall wastewater treatment process was controlled utilizing a Programmable Logic Controller (PLC) based on the Allen Bradley SLC 500 series. This PLC system included the Facility Control System and any related communication and operator interface components. The Human Machine Interface (HMI) operator interface system is provided by a single personal computer (PC), located in the plant office. The main control panel of the facility was located in Electrical Room 3. The PLC was remotely accessible via a modem in the HMI PC, and the corresponding Ethernet link between the PC and PLC.
- The WWTP had a dedicated phone line for the facility alarm dialer. When the facility is unoccupied, alarms requiring operator intervention were annunciated on both the PLC and to the operator via an auto dialer.
- The WWTP gas alarm detection system consisted of two LEL and two H2S detectors, a central control panel. Visual and audible annunciation were included in both the Headworks Room and on the building exterior.

## 3.2 NEW FACILITIES

### 3.2.1 Electrical (General)

All electrical systems installed within the new facility are both code compliant and energy efficient. Electrical distribution is sized to accommodate the as-built requirements and future expansion of the treatment systems and/or pumping requirements of the facility.

#### 3.2.1.1 Electrical Wiring

The plant electrical and controls system wiring is provided by Teck cabling or wiring contained in conduit.

#### 3.2.1.2 Power Distribution Systems

The electrical service for Phase 1 is provided from the new Main Distribution Panel (MDP), located in the Electrical Room #2 202. Power is distributed from new MDP through five circuit breakers. One 3P250A breaker feeds the new MCC-1, located in Electrical Room #2 202. The second 3P60A breaker feeds existing MCC-2, located in Electrical Room #1 209. Third 3P150A breaker feeds new CDP-1 located in Electrical Room #2 202 via new TX-1. Fourth 3P100A breaker feeds existing panel 6B located in Electrical Room #1 209. Last 3P200A breaker feeds new panel 4A Electrical Room #2 202 via TX-3. Central Distribution Panel CDP-1 feeds new panel 2C located in Generator Room, existing panel 2B located in Electrical Room #1 209 and new panel 2A located in Generator Room trough three 3P100A circuit breakers. Refer to electrical single line diagram E6031 at the end of Chapter 4 for detailed power distribution.

#### 3.2.1.3 Motor Control Centre – 1 (MCC-1) and 2 (MCC-2)

MCC-1 and MCC-2 are configured to operate various process and mechanical equipment. Refer to Chapter 6 of the Process Operations and Maintenance Manual for the WWTP operating procedures relating to this equipment. Refer to MCC diagram E603 and Controls Table on E-8 at the end of Chapter 4 for details.

#### 3.2.1.4 Distribution Panel 6B

A 347/600 V, 42-circuit distribution panel feeds the 347/600 V loads. The 347/600 V loads include exterior and interior lighting for WWTP. Refer to electrical panel schedule E608 at the end of Chapter 4 for details.

#### 3.2.1.5 Distribution Panel 2A

A 120/208 V, 60-circuit distribution panel powers various single and three phase mechanical equipment.

Refer to electrical panel schedule E608 at the end of Chapter 4 for details.

#### 3.2.1.6 Distribution Panel 2B

A 120/208 V, 42-circuit distribution panel powers various single and three phase WWTP components and mechanical equipment. Refer to electrical panel schedule E608 at the end of Chapter 4 for details.

#### 3.2.1.7 Distribution Panel 2C

A 120/208 V, 42-circuit distribution panel powers various single and three phase WWTP components and mechanical equipment. Refer to electrical panel schedule E608 at the end of Chapter 4 for details.

#### 3.2.1.8 Distribution Panel 4A

A 277/480 V, 42-circuit distribution panel powers various three phase process equipment. Refer to electrical panel schedule E608 at the end of Chapter 4 for details.

### 3.2.2 Process Controls and Alarms

The overall wastewater treatment process is controlled utilizing two (2) Main Programmable Logic Controllers (PLCs) based on the Allen Bradley ControlLogix series. This PLC system includes the Plant Control System equipment, vendor package integration, and any related communication and operator interface components. The Human Machine Interface (HMI) operator interface system is provided by a personal computer (PC) located in the plant office and a touch-panel monitor in the new electrical room. The two main control panels are located in Electrical Room 3 and outside Electrical Room 2 in the DAF area. The PLC system generates discrete output signals to the auto dialer for critical alarm reporting. The PLC and HMI is remotely

accessible via a VPN link of the Internet. The two (2) Main PLCs interact with Vendor PLCs which performs the equipment specific functions.

#### 3.2.2.1 Wastewater Treatment Process Control

Phase 1 of the WWTP is controlled utilizing a PLC with an HMI. The overall WWTP is depicted on the Process and Instrumentation Diagrams (P&ID). The process that is used at the WWTP is Primary Treatment, which consists of the following unit processes:

- Raw Wastewater Pumping;
- Raw Sewage Screening;
- Primary Treatment (Filtration); and
- Solids Handling.

The primary treatment PLC interacts with the vendor PLCs (Primary Filter PLC, Fine Screen PLC, for detailed equipment control.

Phase 2 of the WWTP is controlled utilizing a PLC with an HMI. The process that is used at the WWTP for Secondary Treatment, consists of the following unit processes:

- Process Aeration Blowers;
- Moving Bed Biofilm Reactors;
- Dissolved Air Floatation Tanks complete with Whitewater Pumping;
- Belt Filter Press; and
- Polymer Injection for DAF and BFP systems.

The secondary treatment PLC interacts with the vendor PLCs (DAF PLC, BFP PLC) for detailed equipment control.

Refer to Drawings I101 through I207 in Appendix A of this Manual for the overall wastewater treatment process instrumentation schematic. Refer to Drawing PC-109 in Appendix A for information on local communications.

Refer to Chapter 6 of the Process Operations and Maintenance Manual for the WWTP operating procedures relating to this equipment.

#### 3.2.2.2 Telecommunications/Alarm Dialer

The WWTP has a dedicated phone line for the facility alarm dialer. High priority alarms (operator-adjustable) will be annunciated on both the HMI and to the operator via an auto dialer.

### 3.2.2.3 WWTP Gas Detection

The WWTP gas alarm detection system consists of LEL and $H_2S$ detectors throughout the process area. Visual beacons are located at the entry of any hazardous areas to alert operations to issues before entering a hazardous space. Visual and audible annunciation are also located within the hazardous spaces.

Blue beacons are used to indicate high levels of H2S and amber beacons are used to indicate high levels of methane (LEL). The beacons will illuminate in the room a gas event has been detected in and stay lit until the gas event has been cleared. The audible horn will be enabled in the room the gas event has been detected in but will silence when the alarm has been acknowledged via the plant SCADA system. The horn will re-enable on each new level of alarm (e.g. If the high alarm was silenced, a high-high will re-enable it).

Each gas detector is also fitted with a senor failure alarm. If any gas detector has an internal failure, an alarm is generated on the plant SCADA system.

Initial alarm limits for the gas detection are as follows:

| Type of Gas | High | High-High |
|---|---|---|
| **Methane (% LEL)** | 10% | 20% |
| **$H_2S$** | 2ppm | 10ppm |

Carbon Monoxide Detection has been added to the new Electrical Room 209.

### 3.2.2.4 Instrumentation and Controls Upgrades

The upgraded WWTP has a completely integrated instrumentation and controls system. The system is configured to ensure the reliable operation of the treatment process in a continuous automatic mode. Refer to the Iqaluit WWTP Process Control Narrative for further details regarding the control of the plant.

Refer to Section 4.3 for a list of installed instruments.

In general, the process control of the WWTP is controlled by two Programmable Logic Controllers (PLCs) that communicate with the field instruments/devices and vendor packages required to monitor and control each individual aspect of the treatment process. Plant systems will operate in Automatic, Remote Manual, or Local modes.

**Operation Modes**

**Automatic -** Automatic control will be performed by programmed logic within the PLC that controls the respective segments of the process. The automatic mode is invoked by placing the local selector switch or switches in the automatic position and enabling the programmed logic within the PLC network to provide control. Where local PLCs and operator interface terminals are utilized (with vendor supplied packaged equipment) the onboard interface terminal will be provided with a local/remote select via the operator interface.

**Remote Manual -** With the local switch in the automatic mode, the operator will have the option to manually control the equipment from the main operator work station or the plant floor operator interface terminals.

**Local -** Equipment can be manually controlled by placing the local selector switch in the hand or off position. Vendor supplied packaged equipment will be locally operable on manual mode by selecting local control and interacting with this equipment from the onboard interface terminal.

## Plant Alarms

Plant alarms will be categorized into three groups – Safety, Major, and Minor. The categories are defined as follows:

- Safety alarms are conditions that are dangerous to personnel or property and require immediate response.
- Major alarms are conditions that require immediate attention.
- Minor alarms are conditions that do not require immediate attention.

Each category of alarm will have a resulting outcome with operator actions to manage the alarm condition (e.g. major alarms require immediate attention; minor alarm conditions should be noted but are non-urgent).

For vendor supplied packaged equipment, such as blowers, a separate discrete visual warning display, provided with the package, will be located at the equipment but integrated with the plant computer alarm system.

A safety alarm can be defined as a condition that could cause danger to life if not given the appropriate attention immediately. The alarm could be generated from; process equipment, combustible gas detection systems or fire detection systems. Safety alarms will be wired directly from the primary initiating device to the audible and visual warning devices installed at key locations around the plant (e.g. bells or horns, and warning units including access points in process areas). A discrete status contact will be taken from the primary sensor to the plant computer system to warn that a safety alarm has been initiated.

## Plant Trend Data and Information Archive

The control system computing will be configured to allow the trending of pre-determined process variables. These trends will be operator configurable to allow the selection of trend variables, trend time bases, and the trend scale. The data required for process trending will be stored in a historian database for archive purposes. Archive data can also be retrieved and compiled to provide monthly or annual reports.

**Plant Control System (PCS)**

The plant control system (PCS) will utilize two PLCs and vendor package supplied PLCs based subsystems connected on an industrial control network to form a single integrated PCS. The PLCs, software, and communications network components are of a uniform manufacturer to ensure that the system will not require physical media or software protocol converters to operate.

**System Hardware**

The WWTP is currently fitted with Allen Bradley (Rockwell Automation) PLC and corresponding software systems. The design intent for the new WWTP is to standardize the entire site to Allen Bradley (Rockwell Automation) PLCs and corresponding software systems. This uniformity of technology manufacturer provides advantages in that both operations and maintenance personnel will need to train on, and be familiar with, only one technology platform. Two new operator machines will be provided as part of this work to provide redundant SCADA PCs for the operators.

**System Software**

The PCS will utilize several different pieces of software to provide the various system functions. New PLC logic will be developed and implemented using Rockwell Automation RSLogix 5000. The SCADA system will be replaced by Inductive Automation's Ignition software. Ignition is being utilized for the SCADA system throughout the City of Iqaluit and will provide compatibility and continuity throughout the water/wastewater system. This compatibility minimizes effort required to integrate the operator interface with the process control, allowing for better operator tools.

It is anticipated that the complete PCS will consist of several PLCs installed at the following locations:

- Headworks (new PLC)
- Screens / screenings conveyor/ washer compactor (Vendor package)
- Primary filter (vendor package)
- Secondary treatment (new PLC)
- Blower control (vendor package)
- DAF control (vendor package)
- BFP control (vendor package)
- Polymer injection systems (vendor packages)

PLC hardware and system software packages is standardized to ensure all systems can communicate and share equipment status and control information over a common platform. Where packaged equipment vendors cannot provide PLC based controls that are appropriately compatible with the plant PCS other alternatives will be pursued.

**Control Panel UPS**

Each PCS control panel will be equipped with an uninterruptable power supply (UPS). The UPS will keep the control system powered during momentary power outages. Each UPS generates alarms on loss of utility power, low battery, general fault, and UPS bypass.

**System Communications**

Individual PLCs will be networked together to form a complete plant automation system. The design approach will be to provide the control systems network using an Ethernet/IP protocol. This control network will be configured in a star topology using copper-based Category 6 Cabling. The size of the plant footprint will not require other media to address transmission distance restrictions. The PCS will also be connected to a plant information network. The plant information network will provide data connections for operator interface computers, operator interface terminals on the plant floor, engineering workstations, and the plant data historian.

**Motor Control and Variable Frequency Drives**

A large portion of the plant control will be provided through the control of electric drive motors. These motors will be fed from Motor Control Centers (MCCs) located in the headworks and the secondary treatment areas of the plant. Where variable frequency drives (VFDs) are required to provide a variable pumping or treatment equipment speed, they will be located within the MCCs to avoid the harsh environment of the plant floor. The control system interface for fixed speed motor starters and the variable frequency drives within the MCCs will be via Ethernet/IP communications protocol.

**Process Instruments and Control Devices**

Process measurement and control devices were specified to provide rugged, reliable, industrial quality components. These devices were selected with the intent to ensure that they have local vendor service and support. Where possible, devices such as flow meters, pressure, temperature, and level instruments were selected to correspond with the manufacturers/types that are currently installed in the WWTP.

Where instruments and control devices are to be installed in areas classified as hazardous atmospheres the devices were rated and installed to meet the appropriate code requirements.

Rated spaces such as the headworks area, where possible, have only the essential devices installed within the space.

The rated spaces were fitted with gas detection systems which will provide local, visual, and audible alarm signaling. The gas detection system will be provided as a complete certified system and will not rely on the plant PLCs or control network to operate. The gas detection system will however provide alarm information to the plant PCS so that operations staff will have all required alarm location information available without having to enter the space.

**END OF CHAPTER 3**

# CHAPTER 4

# 4. SCHEMATICS AND FUNCTIONAL DATA

## 4.1 GENERAL

The following tables describe where the components to the various systems are located and the function that each performs. For each table, there are drawings that can be referenced, to better understand the flow of that part of the Water Treatment Plant.

## 4.2 POWER DISTRIBUTION SCHEMATIC

(Refer to Drawing E603 in Appendix A)

The following table identifies the components related to the power distribution system.

| No. | Component | Location | Function Performed | Remarks |
|---|---|---|---|---|
| **1** | 400A Main Distribution | Electrical room 202 | Provides service to facility. | |
| **2** | 400A Transfer Switch | Electrical room 202 | | |
| **3** | 3P 100 Amp circuit breaker to Panel 6B | 400A Main Distribution Panel | Protect circuit to MCC-2 | |
| **4** | 3P 150Amp circuit breaker to CDP-1 | 400A Main Distribution Panel | Protect circuit to MDP-1 | |
| **5** | 3P 60Amp circuit breaker to MCC-1 | 400A Main Distribution Panel | Protect circuit to MDP-1 | |
| **6** | 3P 200Amp circuit breaker to 4A | 400A Main Distribution Panel | Protect circuit to MDP-1 | |
| **7** | 3P 250Amp circuit breaker to MCC-1 | 400A Main Distribution Panel | Protect circuit to MDP-1 | |
| **8** | SPD | MDP-1, DCP-1, MCC-1, MCC-2 | Power Condition Monitor | |
| **9** | Central Distribution Panel CDP-1 | Electrical room 202 | | |
| **10** | 3P 100A Sub breaker, Panel 2A | CDP-1 | Protect circuit to panel 2A | |
| **11** | 3P 100A Sub breaker, Panel 2B | CDP-1 | Protect circuit to panel 2B | |
| **12** | 3P 100A Sub breaker, Panel 2B | CDP-1 | Protect circuit to panel 2C | |

| No. | Component | Location | Function Performed | Remarks |
|---|---|---|---|---|
| **13** | 112.5kVATransformer to CDP-1 | Electrical room 202 | Provide power to panel CDP-1 | |
| **14** | 45kVA Transformer to Panel 4A | Electrical room 202 | Provide power to panel 4A | |
| **15** | Distribution panel 2A | Generator room | | |
| **16** | Distribution panel 2B | Electrical Room 209 | | |
| **17** | Distribution panel 2C | Generator room | | |
| **18** | Distribution panel 4A | Electrical Room 202 | | |
| **19** | Distribution panel 6B | Electrical Room 209 | | |
| **20** | Motor Control Center #1 | Electrical Room 202 | | |
| **21** | Motor Control Center #2 | Electrical Room 209 | | |

## 4.3 INSTRUMENTS

(Refer to Instrumentation Drawings in Appendix A)

The following table identifies the instruments used in the WWTP.

| No. | Component | Location | Function Performed | Remarks |
|---|---|---|---|---|
| 1 | Flow Meter (FQIT-01-150) | RS Piping, Lower Floor | Measures influent flow into the Plant | Signals the PLC |
| 2 | Level Indicating Transmitter (LIT-01-100) | Mounted in the pump well | Indicates the wastewater level in the pump well | Signals the PLC |
| 3 | Level Switch (LSLL-01-111) | Mounted in the pump well | Indicates the low low wastewater level in the pump well | Signals the PLC |
| 4 | Level Switch (LSL-01-112) | Mounted in the pump well | Indicates the low wastewater level in the pump well | Signals the PLC |
| 5 | Level Switch (LSH-01-113) | Mounted in the pump well | Indicates the high wastewater level in the pump well | Signals the PLC |
| 6 | Level Switch (LSHH-01-114) | Mounted in the pump well | Indicates the high-high wastewater level in the pump well | Signals the PLC |
| 7 | Motorized Knife Gate Valve (KV-01-211) | Headworks Upper Floor | Control sewage to SCRN-02-210 | PLC Controlled |
| 8 | Level Indicating Transmitter (LIT-01-211) | Mounted on coarse screen tank wall | Indicates the wastewater level in the screen channel SCRN-01-210 | Signals the vendor PLC |
| 9 | Solenoid Valve (SV-01-120) | In coarse screen tankage | Controls the flow of wash water to SCRN-01-210 | Vendor PLC Controlled |
| 10 | Solenoid Valve (SV-01-122) | In coarse screen tankage | Controls the flow of wash water to SCRN-01-210 | Vendor PLC Controlled |
| 11 | Motorized Knife Gate Valve (KV-01-221) | Headworks Upper Floor | Control sewage to SCRN-02-220 | PLC Controlled |
| 12 | Level Indicating Transmitter (LIT-01-221) | Mounted on coarse screen tank wall | Indicates the wastewater level in the screen channel SCRN-01-220 | Signals the vendor PLC |
| 13 | Solenoid Valve (SV-01-124) | In coarse screen tankage | Controls the flow of wash water to SCRN-01-220 | Vendor PLC Controlled |

| No. | Component | Location | Function Performed | Remarks |
|---|---|---|---|---|
| 14 | Solenoid Valve (SV-01-126) | In coarse screen tankage | Controls the flow of wash water to SCRN-01-220 | Vendor PLC Controlled |
| 15 | Motorized Knife Gate Valve (KV-01-112) | Headworks Lower Floor | Control screening discharge to trailer | PLC Controlled |
| 16 | Motorized Knife Gate Valve (KV-01-112A) | Headworks Lower Floor | Control primary filter discharge to trailer | PLC Controlled |
| 17 | Solenoid Valve (SV-01-113) | Headworks Upper Floor | Drains primary filter PF-01-310 | Vendor PLC Controlled |
| 18 | Solenoid Valve (SV-01-312) | Headworks Upper Floor | Controls flow of hot non-potable wash water to PF-01-310 & SP-01-330 | Vendor PLC Controlled |
| 19 | Solenoid Valve (SV-01-322) | Headworks Upper Floor | Controls flow of cold non-potable wash water to PF-01-310 | Vendor PLC Controlled |
| 20 | Motorized Knife Gate Valve (KV-01-111, FV-111) | Headworks Upper Floor | Controls flow to primary filter PF-01-310 | PLC Controlled |
| 21 | Level Transmitter (LIT-01-115) | Headworks Upper Floor | Indicates level of primary filter PF-01-310 | Vendor PLC Controlled |
| 22 | Pressure Transmitter (PT-01-116) | Headworks Upper Floor | Indicates air pressure to primary filter PF-01-310 | Vendor PLC Controlled |
| 23 | Solenoid Valve (SV-01-123) | Headworks Upper Floor | Drains primary filter PF-01-320 | Vendor PLC Controlled |
| 24 | Solenoid Valve (SV-01-313) | Headworks Upper Floor | Controls flow of hot non-potable wash water to PF-01-320 & SP-01-340 | Vendor PLC Controlled |
| 25 | Solenoid Valve (SV-01-323) | Headworks Upper Floor | Controls flow of cold non-potable wash water to PF-01-320 | Vendor PLC Controlled |
| 26 | Motorized Knife Gate Valve (KV-01-121, FV-121) | Headworks Upper Floor | Controls flow to primary filter PF-01-320 | PLC Controlled |
| 27 | Level Transmitter (LIT-01-125) | Headworks Upper Floor | Indicates level of primary filter PF-01-320 | Vendor PLC Controlled |
| 28 | Pressure Transmitter (PT-01-126) | Headworks Upper Floor | Indicates air pressure to primary filter PF-01-320 | Vendor PLC Controlled |
| 29 | Motorized Knife Gate Valve (KV-01-001, FV-01-001) | Headworks Upper Floor | Diverts primary effluent overflow to outfall | PLC Controlled |

| No. | Component | Location | Function Performed | Remarks |
|---|---|---|---|---|
| 30 | Pressure Indicator (PI-02-217) | Headworks Upper Floor | Indicates air pressure | |
| 31 | Pressure Indicator (PI-02-227) | Headworks Upper Floor | Indicates air pressure | |
| 32 | Pressure Indicator (PI-107) | Secondary Treatment - Upper | Indicates air pressure | |
| 33 | Pressure Switch (PSL-108) | Secondary Treatment - Upper | | Signal to PLC |
| 34 | Pressure Indicator (PI-02-117) | Secondary Treatment - Upper | Indicates air pressure | |
| 35 | Pressure Switch (PSH-02-118) | Secondary Treatment - Upper | | Signal to PLC |
| 36 | Temperature Indicator (TI-02-119) | Secondary Treatment - Upper | Indicates air temperature | |
| 37 | Temperature Switch (TI-02-120) | Secondary Treatment - Upper | | |
| 38 | Pressure Indicator (PI-02-142) | Secondary Treatment - Upper | Indicates air pressure | |
| 39 | Pressure Switch (PSL-02-143) | Secondary Treatment - Upper | | Signal to PLC |
| 40 | Pressure Indicator (PI-02-127) | Secondary Treatment - Upper | | |
| 41 | Pressure Switch (PSH-02-128) | Secondary Treatment - Upper | | Signal to PLC |
| 42 | Temperature Indicator (TI-02-129) | Secondary Treatment - Upper | Indicates air temperature | |
| 43 | Temperature Switch (TI-02-130) | Secondary Treatment - Upper | | |
| 44 | Pressure Indicator (PI-02-145) | Secondary Treatment - Upper | | |
| 45 | Pressure Switch (PSL-02-146) | Secondary Treatment - Upper | | Signal to PLC |
| 46 | Pressure Indicator (PI-02-137) | Secondary Treatment - Upper | Indicates air pressure | |
| 47 | Pressure Switch (PSH-02-138) | Secondary Treatment - Upper | | Signal to PLC |
| 48 | Temperature Indicator (TI-02-139) | Secondary Treatment - Upper | Indicates air temperature | |
| 49 | Temperature Switch (TI-02-140) | Secondary Treatment - Upper | | |
| 50 | Pressure transmitter (PIT-02-195) | Secondary Treatment - Upper | Indicates air pressure from blowers | Signal to PLC |
| 51 | Motorized Butterfly Valve (BFV-02-150) | Secondary Treatment - Upper | Isolates air supply to MBBR2 | PLC Controlled |
| 52 | Flow meter (FQIT-02-152, FE-02-152) | Secondary Treatment - Upper | Measures air supply to MBBR2 | Signal to PLC |

| No. | Component | Location | Function Performed | Remarks |
|---|---|---|---|---|
| 53 | Motorized Butterfly Valve (BFV-02-155) | Secondary Treatment - Upper | Isolates air supply to MBBR1 | PLC Controlled |
| 54 | Flow meter (FQIT-02-156, FE-02-156) | Secondary Treatment - Upper | Measures air supply to MBBR1 | Signal to PLC |
| 55 | Motorized Butterfly Valve (BFV-02-170) | Secondary Treatment - Upper | Isolates air supply to TWAS Tank | PLC Controlled |
| 56 | Flow meter (FQIT-02-172, FE-02-172) | Secondary Treatment - Upper | Measures air supply to TWAS Tank | Signal to PLC |
| 57 | Motorized Knife Gate Valve (KV-02-211, FV-02-211) | Secondary Treatment - Lower | Controls flow to MBBR T-02-210 | PLC Controlled |
| 58 | Dissolved Oxygen Analyzers (AIT-02-211) | Mounted in the MBBR tank T-02-210 | Measures dissolved oxygen concentration in MBBR1 Cell 1-1 | Signal to PLC |
| 59 | Level Switch (LSH-02-213) | Mounted in the MBBR tank T-02-210 | Alarms at high level in Cell 1-1 | Signals to PLC |
| 60 | Dissolved Oxygen Analyzers (AIT-02-212) | Mounted in the MBBR tank T-02-210 | Measures dissolved oxygen concentration in MBBR1 Cell 1-2 | Signal to PLC |
| 61 | Level Switch (LSH-02-214) | Mounted in the MBBR tank T-02-210 | Alarms at high level in Cell 1-2 | Signals to PLC |
| 62 | Motorized Knife Gate Valve (KV-02-221, FV-221) | Secondary Treatment - Lower | Controls flow to MBBR T-02-220 | PLC Controlled |
| 63 | Dissolved Oxygen Analyzers (AIT-02-221) | Mounted in the MBBR tank T-02-220 | Measures dissolved oxygen concentration in MBBR2 Cell 2-1 | Signal to PLC |
| 64 | Level Switch (LSH-02-223) | Mounted in the MBBR tank T-02-220 | Alarms at high level in Cell 2-1 | Signals to PLC |
| 65 | Dissolved Oxygen Analyzers (AIT-02-222) | Mounted in the MBBR tank T-02-220 | Measures dissolved oxygen concentration in MBBR2 Cell 2-2 | Signal to PLC |
| 66 | Level Switch (LSH-02-224) | Mounted in the MBBR tank T-02-210 | Alarms at high level in Cell 2-2 | Signals to PLC |
| 67 | Motorized Knife Gate Valve (KV-02-230, FV-230) | Secondary Treatment - Lower | Isolates mixed liquor to DAFs | |
| 68 | Motorized Valve (BFV-02-312, FV-312) | Secondary Treatment - Lower | Isolates DAF Tank 1 T02-310 | PLC Controlled |

| No. | Component | Location | Function Performed | Remarks |
|---|---|---|---|---|
| 69 | Level Switch (LSH-02-330) | Mounted inside the DAF Tank | High Level in Zone 1 of DAF 1 | Signals to Vendor PLC |
| 70 | Motorized Butterfly Valve (BFV-02-625) | Mounted inside the DAF Tank | Controls white water inlet to DAF 1 | Vendor PLC Controlled |
| 71 | Level Transmitter (LIT-02-331) | Mounted inside the DAF Tank | Level in Zone 3 of DAF 1 | Signals to Vendor PLC |
| 72 | Level Switch (LSH-02-332) | Mounted inside the DAF Tank | High Level in Zone 4 of DAF 1 | Signals to Vendor PLC |
| 73 | Level Switch (LSL-02-333) | Mounted inside the DAF Tank | Low Level in Zone 4 of DAF 1 | Signals to Vendor PLC |
| 74 | TSS Analyzer (AIT-02-334) | Mounted inside the DAF Tank | Indicated suspended solids in Zone 5 of DAF 1 | Signals to Vendor PLC |
| 75 | Motorized Butterfly Valve (BFV-02-309) | Secondary Treatment - Lower | Isolates clarified water to white water pumps | |
| 76 | Motorized Butterfly Valve (BFV-02-310) | Secondary Treatment - Lower | Isolates clarified water to white water pumps | |
| 77 | Flow Transmitter (FQIT-02-317) | Secondary Treatment - Lower | Indicates flow to DAF 1 White water pumps | Signals to Vendor PLC |
| 78 | Flow indicator (FI-02-412) | Secondary Treatment - Lower | Air flow indication to P-02-410 | |
| 79 | Pressure Indicator (PI-02-404) | Secondary Treatment - Lower | Indicates pressure on inlet to P-02-410 | |
| 80 | Pressure Indicator (PI-02-409) | Secondary Treatment - Lower | Indicates pressure on outlet to P-02-410 | |
| 81 | Flow indicator (FI-02-427) | Secondary Treatment - Lower | Air flow indication to P-02-420 | |
| 82 | Pressure Indicator (PI-02-419) | Secondary Treatment - Lower | Indicates pressure on inlet to P-02-420 | |
| 83 | Pressure Indicator (PI-02-424) | Secondary Treatment - Lower | Indicates pressure on outlet to P-02-420 | |
| 84 | Flow Indicator (FI-02-442) | Secondary Treatment - Lower | Air flow indication to P-02-430 | |
| 85 | Pressure Indicator (PI-02-434) | Secondary Treatment - Lower | Indicates pressure on inlet to P-02-430 | |

| No. | Component | Location | Function Performed | Remarks |
|---|---|---|---|---|
| 86 | Pressure Indicator (PI-02-439) | Secondary Treatment - Lower | Indicates pressure on outlet to P-02-430 | |
| 87 | Motorized Butterfly Valve (BFV-02-511) | Secondary Treatment - Lower | Isolates White water Strainer STR-05-510 | Vendor PLC Controlled |
| 88 | Motorized Butterfly Valve (BFV-02-512) | Secondary Treatment - Lower | Isolates White water Strainer Drain | Vendor PLC Controlled |
| 89 | Pressure Indicator (PI-02-510) | Secondary Treatment - Lower | Indicates White water Strainer #1 Drain | |
| 90 | Motorized Butterfly Valve (BFV-02-521) | Secondary Treatment - Lower | Isolates White water Strainer STR-05-520 | Vendor PLC Controlled |
| 91 | Motorized Butterfly Valve (BFV-02-522) | Secondary Treatment - Lower | Isolates White water Strainer Drain | Vendor PLC Controlled |
| 92 | Pressure Indicator (PI-02-520) | Secondary Treatment - Lower | Indicates White water Strainer #2 Drain | |
| 93 | Pressure Transmitter (PT-02-527) | Secondary Treatment - Lower | Pressure indication of DAF 1 Subnatant | Signals to Vendor PLC |
| 94 | Motorized Valve (BFV-02-332, FV-02-332) | Secondary Treatment - Lower | Isolates DAF Tank 2 T-02-320 | PLC Controlled |
| 95 | Level Switch (LSH-02-340) | Mounted inside the DAF Tank | High Level in Zone 1 of DAF 2 | Signals to Vendor PLC |
| 96 | Motorized Butterfly Valve (BFV-02-645) | Mounted inside the DAF Tank | Controls white water inlet to DAF 2 | Vendor PLC Controlled |
| 97 | Level Transmitter (LIT-02-341) | Mounted inside the DAF Tank | Level in Zone 3 of DAF 2 | Signals to Vendor PLC |
| 98 | Level Switch (LSH-02-342) | Mounted inside the DAF Tank | High Level in Zone 4 of DAF 2 | Signals to Vendor PLC |
| 99 | Level Switch (LSL-02-343) | Mounted inside the DAF Tank | Low Level in Zone 4 of DAF 2 | Signals to Vendor PLC |
| 100 | TSS Analyzer (AIT-02-344) | Mounted inside the DAF Tank | Indicated suspended solids in Zone 5 of DAF 2 | Signals to Vendor PLC |
| 101 | Motorized Butterfly Valve (BFV-02-329) | Secondary Treatment - Lower | Isolates clarified water to white water pumps | |
| 102 | Motorized Butterfly Valve (BFV-02-330) | Secondary Treatment - Lower | Isolates clarified water to white water pumps | |

| No. | Component | Location | Function Performed | Remarks |
|---|---|---|---|---|
| 103 | Flow meter (FE-02-328) | Secondary Treatment - Lower | Final Effluent flowmeter | Signals to PLC |
| 104 | Flow meter (FE-02-327) | Secondary Treatment - Lower | Indicates flow to DAF 1 White water pumps | Signals to Vendor PLC |
| 105 | Flow indicator (FI-02-462) | Secondary Treatment - Lower | Air flow indication to P-02-440 | |
| 106 | Pressure Indicator (PI-02-454) | Secondary Treatment - Lower | Indicates pressure on inlet to P-02-440 | |
| 107 | Pressure Indicator (PI-02-459) | Secondary Treatment - Lower | Indicates pressure on outlet to P-02-440 | |
| 108 | Flow indicator (FI-02-477) | Secondary Treatment - Lower | Air flow indication to P-02-450 | |
| 109 | Pressure Indicator (PI-02-469) | Secondary Treatment - Lower | Indicates pressure on inlet to P-02-450 | |
| 110 | Pressure Indicator (PI-02-474) | Secondary Treatment - Lower | Indicates pressure on outlet to P-02-450 | |
| 111 | Flow Indicator (FI-02-492) | Secondary Treatment - Lower | Air flow indication to P-02-460 | |
| 112 | Pressure Indicator (PI-02-484) | Secondary Treatment - Lower | Indicates pressure on inlet to P-02-460 | |
| 113 | Pressure Indicator (PI-02-489) | Secondary Treatment - Lower | Indicates pressure on outlet to P-02-460 | |
| 114 | Motorized Butterfly Valve (BFV-02-531, FV-02-531) | Secondary Treatment - Lower | Isolates White water Strainer STR-05-530 | Vendor PLC Controlled |
| 115 | Motorized Butterfly Valve (BFV-02-532) | Secondary Treatment - Lower | Isolates White water Strainer Drain | Vendor PLC Controlled |
| 116 | Pressure Indicator (PI-02-530) | Secondary Treatment - Lower | Indicates White water Strainer #1 Drain | |
| 117 | Motorized Butterfly Valve (BFV-02-541, FV-02-541) | Secondary Treatment - Lower | Isolates White water Strainer STR-05-540 | Vendor PLC Controlled |
| 118 | Motorized Butterfly Valve (BFV-02-542) | Secondary Treatment - Lower | Isolates White water Strainer Drain | Vendor PLC Controlled |
| 119 | Pressure Indicator (PI-02-540) | Secondary Treatment - Lower | Indicates White water Strainer #2 Drain | |

| No. | Component | Location | Function Performed | Remarks |
|---|---|---|---|---|
| 120 | Pressure Transmitter (PT-02-547) | Secondary Treatment - Lower | Pressure indication of DAF 2 Subnatant | Signals to Vendor PLC |
| 121 | Pressure Switch (PSL-04-711) | Chemical Dosing Upper | Low potable water pressure | Signals to Vendor PLC |
| 122 | Pressure Indicator (PSL-04-712) | Chemical Dosing Upper | Potable water pressure indication | Signals to Vendor PLC |
| 123 | Solenoid Valve (SV-04-713) | Chemical Dosing Upper | Control flow of potable water | Vendor PLC Controlled |
| 124 | Solenoid Valve (SV-04-714) | Chemical Dosing Upper | Control flow of potable water | Vendor PLC Controlled |
| 125 | Level Switch (LSL-04-710) | Chemical Dosing Upper | Vacuum conveyor VAC-04-710 Low Level | Signals to Vendor PLC |
| 126 | Level Transmitter (LIT-04-742) | Chemical Dosing Upper | T-04-740 Polymer Mixing Tank Level | Signals to Vendor PLC |
| 127 | Polymer Analyzer (AIT-04-741) | Chemical Dosing Upper | Polymer Indication of T-04-740 | Signals to Vendor PLC |
| 128 | Temperature Indication (TIT-04-741) | Chemical Dosing Upper | Temperature Indication of T-04-740 | Signals to Vendor PLC |
| 129 | Polymer Analyzer (AE-04-745) | Chemical Dosing Upper | Polymer Indication of T-04-750 | Signals to Vendor PLC |
| 130 | Level Transmitter (LIT-04-746) | Chemical Dosing Upper | T-04-750 Polymer Mixing Tank Level | Signals to Vendor PLC |
| 131 | Motorized Butterfly Valve (BV-04-744) | Chemical Dosing Upper | DAF Polymer to Mixing Tank Isolation | Vendor PLC Controlled |
| 132 | Temperature Element (TE-04-769) | Chemical Dosing Upper | P-04-770 Motor Temperature Alarm | Signals to PLC |
| 133 | Pressure Switch (PSH-04-787) | Chemical Dosing Upper | P-04-770 Outlet Pressure Alarm | Signals to PLC |
| 134 | Temperature Element (TE-04-770) | Chemical Dosing Upper | P-04-780 Motor Temperature Alarm | Signals to PLC |
| 135 | Pressure Switch (PSH-04-793) | Chemical Dosing Upper | P-04-780 Outlet Pressure Alarm | Signals to PLC |
| 136 | Temperature Element (TE-04-771) | Chemical Dosing Upper | P-04-790 Motor Temperature Alarm | Signals to PLC |
| 137 | Pressure Switch (PSH-04-790) | Chemical Dosing Upper | P-04-790 Outlet Pressure Alarm | Signals to PLC |
| 138 | Solenoid Valve (SV-04-783) | Chemical Dosing Upper | Potable Water control for DAF 1 Polymer | Signals to Vendor PLC |

| No. | Component | Location | Function Performed | Remarks |
|---|---|---|---|---|
| 139 | Solenoid Valve (SV-04-784) | Chemical Dosing Upper | Potable Water control for DAF 2 Polymer | Signals to Vendor PLC |
| 140 | Flow Indicator (FI-04-785) | Chemical Dosing Upper | Potable Water flow indication for DAF 1 Polymer | Signals to Vendor PLC |
| 141 | Flow Indicator (FI-04-786) | Chemical Dosing Upper | Potable Water flow indication for DAF 2 Polymer | Signals to Vendor PLC |
| 142 | Flow Transmitter (FIT-04-798) | Chemical Dosing Upper | Flow Indication for Polymer Solution to DAF 1 | Signals to PLC |
| 143 | Flow Transmitter (FIT-04-799) | Chemical Dosing Upper | Flow Indication for Polymer Solution to DAF 2 | Signals to PLC |
| 144 | Pressure Indicator (PI-02-615) | Secondary Treatment Lower | Inlet Pressure of TWAS Pump P-02-610 | |
| 145 | Pressure Indicator (PI-02-618) | Secondary Treatment Lower | Discharge Pressure Indication of TWAS Pump P-02-610 | |
| 146 | Pressure Switch (PSH-619) | Secondary Treatment Lower | Discharge Pressure Indication of TWAS Pump P-02-610 | Signals to PLC |
| 147 | Pressure Indicator (PI-02-635) | Secondary Treatment Lower | Indicates inlet pressure for pump P-02-620 | |
| 148 | Pressure Indicator (PI-02-638) | Secondary Treatment Lower | Discharge Pressure Indication of TWAS Pump P-02-610 | |
| 149 | Pressure Switch (PSH-02-639) | Secondary Treatment Lower | Discharge Pressure Indication of TWAS Pump P-02-610 | Signals to PLC |
| 150 | Level Transmitter (LIT-03-111) | Solids Handling Lower | Indicates level for TWAS Tank 1 T-03-630 | Signal to PLC |
| 151 | Level Switch (LSHH-03-112) | Solids Handling Lower | Indicates level for TWAS Tank 1 T-03-630 | Signal to PLC |
| 152 | Level Switch (LSHH-03-113) | Solids Handling Lower | Indicates level for TWAS Tank 1 T-03-630 | Signal to PLC |
| 153 | Level Transmitter (LIT-03-121) | Solids Handling Lower | Indicates level for TWAS Tank 1 T-03-630 | Signal to PLC |
| 154 | Level Switch (LSHH-03-122) | Solids Handling Lower | Indicates level for TWAS Tank 1 T-03-630 | Signal to PLC |

| No. | Component | Location | Function Performed | Remarks |
|---|---|---|---|---|
| 155 | Level Switch (LSHH-03-123) | Solids Handling Lower | Indicates level for TWAS Tank 1 T-03-630 | Signal to PLC |
| 156 | Pressure Indicator (PI-03-664) | Solids Handling Lower | BFP Feed P-03-630 Inlet Pressure Indication | |
| 157 | Pressure Indicator (PI-03-668) | Solids Handling Lower | Discharge Pressure Indication BFP Feed Pump P-03-630 | |
| 158 | Pressure Switch (PSH-03-669) | Solids Handling Lower | Discharge Pressure High BFP Feed Pump P-03-630 | Signal to PLC |
| 159 | Pressure Transmitter (PDIT-03-640) | Solids Handling Lower | Differential Pressure between atmosphere and TWAS Tank | Signal to PLC |
| 160 | Pressure Indicator (PI-03-684) | Solids Handling Lower | BFP P-03-640 Inlet Pressure Indication | |
| 161 | Pressure Indicator (PI-03-688) | Solids Handling Lower | Discharge Pressure Indication BFP pump P-03-640 | |
| 162 | Pressure Switch (PSH-689) | Solids Handling Lower | Discharge Pressure High BFP pump P-03-640 | Signal to PLC |
| 163 | Flow Meter (FE-695, FM-03-695) | Solids Handling Lower | Flow Indication to Belt Filter Press BFP-03-650 | Signal to PLC |
| 164 | Pressure Indicating Transmitter (PIT-03-606) | Solids Handling Lower | Measures the TWAS flow to belt filter press | Signals to Vendor PLC |
| 165 | Pressure Switch (PSL-04-911) | Chemical Dosing Upper | Indicates booster pump discharge pressure | Signals to Vendor PLC |
| 166 | Pressure Indicator (PI-04-912) | Chemical Dosing Upper | Indicates Potable Water Pressure for BFP Polymer System | |
| 167 | Solenoid Valve (SV-04-913) | Chemical Dosing Upper | Potable Water control to BFP Polymer Dosing System | Vendor PLC Controlled |

| No. | Component | Location | Function Performed | Remarks |
|---|---|---|---|---|
| 168 | Solenoid Valve (SV-04-914) | Chemical Dosing Upper | Potable Water control to BFP Polymer Dosing System | Vendor PLC Controlled |
| 169 | Level Switch (LSL-04-910) | Chemical Dosing Upper | Low Level Polymer Dosing Vacuum Conveyor | Signals to Vendor PLC |
| 170 | Temperature Transmitter (TIT-04-941) | Chemical Dosing Upper | BFP Polymer Mixing Tank Temperature Indication | Signals to Vendor PLC |
| 171 | Polymer Analyzer (AIT-04-941) | Chemical Dosing Upper | BFP Polymer Mixing Tank Polymer Indication | Signals to Vendor PLC |
| 172 | Level Transmitter (LIT-04-942) | Chemical Dosing Upper | BFP Polymer Mixing Tank Level Indication | Signals to Vendor PLC |
| 173 | Motorized Butterfly Valve (BV-04-944) | Chemical Dosing Upper | BFP Polymer to Mixing Tank Isolation | Vendor PLC Controlled |
| 174 | Polymer Analyzer (AE-04-945) | Chemical Dosing Upper | BFP Polymer Aging Tank Polymer Indication | Signals to Vendor PLC |
| 175 | Level Transmitter (LIT-04-946) | Chemical Dosing Upper | BFP Polymer Aging Tank Level Indication | Signals to Vendor PLC |
| 176 | Temperature Element (TE-04-966) | Chemical Dosing Upper | P-04-970 Temperature Alarm | Signals to Vendor PLC |
| 177 | Pressure Switch (PSH-04-987) | Chemical Dosing Upper | P-04-970 Discharge Pressure Alarm | Signals to Vendor PLC |
| 178 | Temperature Element (TE-04-967) | Chemical Dosing Upper | P-04-980 Temperature Alarm | Signals to Vendor PLC |
| 179 | Pressure Switch (PSH-04-990) | Chemical Dosing Upper | P-04-980 Discharge Pressure Alarm | Signals to Vendor PLC |
| 180 | Flow Meter (FIT-04-999, FM-04-999) | Chemical Dosing Upper | Measures polymer flow to belt filter press | Signal to PLC |
| 181 | Solenoid Valve (SV-04-982) | Chemical Dosing Upper | Isolates BFP polymer dosing pump | Signal to PLC |
| 182 | Flow Indicator (FI-04-963) | Chemical Dosing Upper | Indicates potable water to belt filter press | |

| No. | Component | Location | Function Performed | Remarks |
|---|---|---|---|---|
| 183 | Gas Analyzer (AIT-01-901) | Lower Headworks | H2S and LEL Indication | Signal to PLC |
| 184 | Gas Analyzer (AIT-01-902) | Lower Headworks | H2S and LEL Gas Detection | Signal to PLC |
| 185 | Horn (UA-01-940) | Lower Headworks | H2S and LEL Gas Detection Horn | Controlled by PLC |
| 186 | Beacon (UL-01-920A) | Lower Headworks | H2S Beacon | Signal to PLC |
| 187 | Beacon (UL-01-920B) | Lower Headworks | H2S Beacon | Signal to PLC |
| 188 | Beacon (UL-01-920C) | Lower Headworks | H2S Beacon | Signal to PLC |
| 189 | Beacon (UL-01-920D) | Lower Headworks | H2S Beacon | Signal to PLC |
| 190 | Beacon (UL-01-920E) | Lower Headworks | H2S Beacon | Signal to PLC |
| 191 | Beacon (UL-01-930A) | Lower Headworks | H2S Beacon | Signal to PLC |
| 192 | Beacon (UL-01-930B) | Lower Headworks | LEL Beacon | Signal to PLC |
| 193 | Beacon (UL-01-930C) | Lower Headworks | LEL Beacon | Signal to PLC |
| 194 | Beacon (UL-01-930D) | Lower Headworks | LEL Beacon | Signal to PLC |
| 195 | Beacon (UL-01-930E) | Lower Headworks | LEL Beacon | Signal to PLC |
| 196 | Temperature Transmitter (TT-01-950) | Lower Headworks | Temperature Indication | Signal to PLC |
| 197 | Gas Analyzer (AIT-01-903) | Upper Headworks | H2S and LEL Gas Detection | Signal to PLC |
| 198 | Gas Analyzer (AIT-01-904) | Upper Headworks | H2S and LEL Gas Detection | Signal to PLC |
| 199 | Horn (UA-01-941) | Upper Headworks | H2S and LEL Gas Detection Horn | Signal to PLC |
| 200 | Beacon (UL-01-921A) | Upper Headworks | H2S Beacon | Signal to PLC |
| 201 | Beacon (UL-01-921B) | Upper Headworks | H2S Beacon | Signal to PLC |
| 202 | Beacon (UL-01-921C) | Upper Headworks | H2S Beacon | Signal to PLC |
| 203 | Beacon (UL-01-931A) | Upper Headworks | LEL Beacon | Signal to PLC |
| 204 | Beacon (UL-01-931B) | Upper Headworks | LEL Beacon | Signal to PLC |
| 205 | Beacon (UL-01-931C) | Upper Headworks | LEL Beacon | Signal to PLC |
| 206 | Temperature Transmitter (TT-01-951) | Upper Headworks | Temperature Indication | Signal to PLC |

| No. | Component | Location | Function Performed | Remarks |
|---|---|---|---|---|
| 207 | Gas Analyzer (AIT-02-907) | MBBR | H2S Gas Detection | Signal to PLC |
| 208 | Gas Analyzer (AIT-02-909) | DAF 1 Upper | H2S Gas Detection | Signal to PLC |
| 209 | Gas Analyzer (AIT-02-908) | DAF 2 Upper | H2S Gas Detection | Signal to PLC |
| 210 | Gas Analyzer (AIT-02-905) | DAF 2 Lower | H2S Gas Detection | Signal to PLC |
| 211 | Temperature Transmitter (TT-0-954) | DAF | Temperature Indication | Signal to PLC |
| 212 | Beacon (UL-02-922A) | Lower Secondary Treatment | H2S Gas Beacon | Signal to PLC |
| 213 | Beacon (UL-02-922B) | Lower Secondary Treatment | H2S Gas Beacon | Signal to PLC |
| 214 | Beacon (UL-03-922C) | Lower Secondary Treatment | H2S Gas Beacon | Signal to PLC |
| 215 | Horn (UA-02-942) | Lower Secondary Treatment | H2S Gas Horn | Signal to PLC |
| 216 | Beacon (UL-02-923A) | Upper Secondary Treatment | H2S Gas Beacon | Signal to PLC |
| 217 | Beacon (UL-02-923B) | Upper Secondary Treatment | H2S Gas Beacon | Signal to PLC |
| 218 | Beacon (UL-02-923C) | Upper Secondary Treatment | H2S Gas Beacon | Signal to PLC |
| 219 | Beacon (UL-02-923D) | Upper Secondary Treatment | H2S Gas Beacon | Signal to PLC |
| 220 | Horn (UA-02-943) | Upper Secondary Treatment | H2S Gas Horn 1 | Signal to PLC |
| 221 | Horn (UA-02-944) | Upper Secondary Treatment | H2S Gas Horn 2 | Signal to PLC |
| 222 | Flow Transmitter (FQIT-04-300) | | Incoming Potable Water Flow Indication | Signal to PLC |
| 223 | Temperature Transmitter (TT-02-952) | Electrical Room 202 | Temperature Indication | Signal to PLC |
| 224 | Temperature Transmitter (TT-02-953) | Electrical Room 209 | Temperature Indication | Signal to PLC |

| No. | Component | Location | Function Performed | Remarks |
|---|---|---|---|---|
| 225 | Gas Analyzer (AIT-02-801) | Electrical Room 209 | CO Gas Detection | Signal to PLC |
| 226 | Gas Analyzer (AIT-03-910) | Press Room | H2S Gas Detection | Signal to PLC |
| 227 | Gas Analyzer (AIT-03-906) | BFP | H2S Gas Detection | Signal to PLC |
| 228 | Temperature Transmitter (TT-03-955) | BFP | Temperature Indication | Signal to PLC |
|  | Smoke Detection (AS-01-960) |  | Smoke Detection | Signal to PLC |

## 4.4 MOTOR CONTROL CENTRE

(Refer to Drawing E501 in Appendix A)

The following table identifies the components related to the motor control center.

**Motor Control Centre - 1**

| No. | Component | Location | Function Performed | Remarks |
|---|---|---|---|---|
| **1A** | Incoming Lugs | MCC Cabinet | Connection to field devices. | |
| **1U** | SPARE | MCC Cabinet | | Space for Future Expansion |
| **2A** | SPD | MCC Cabinet | | Space for Future Expansion |
| **2C** | DAF-1 P-02-410 | MCC Cabinet | Refer to Process O&M Manual. | |
| **2G** | DAF-1 P-02-420 | MCC Cabinet | Refer to Process O&M Manual. | |
| **2K** | DAF-1 P-02-430 | MCC Cabinet | Refer to Process O&M Manual. | Expansion |
| **2O** | SPARE | MCC Cabinet | | Space for Future Expansion |
| **2S** | SPARE | MCC Cabinet | | Space for Future Expansion |
| **2W** | SPARE | MCC Cabinet | | Space for Future Expansion |
| **3A** | SPARE | MCC Cabinet | | Space for Future Expansion |
| **3E** | SPARE | MCC Cabinet | | Space for Future Expansion |
| **3G** | SPARE | MCC Cabinet | | Space for Future Expansion |
| **3K** | BFP FEED PUMP P-03-640 | MCC Cabinet | Refer to Process O&M Manual. | |
| **3S** | OUTPUT REACTOR FOR P-03-640 | MCC Cabinet | Refer to Process O&M Manual. | |
| **3V** | SPARE | MCC Cabinet | | Space for Future Expansion |

| No. | Component | Location | Function Performed | Remarks |
|---|---|---|---|---|
| **4A** | LINE REACTOR FOR B-102-130 | MCC Cabinet | Refer to Process O&M Manual. | |
| **4D** | BLOWER 3 B-02-130 | MCC Cabinet | Refer to Process O&M Manual. | |
| **4N** | OUTPUT REACTOR FOR B-02-130 | MCC Cabinet | Refer to Process O&M Manual. | |
| **4Q** | SPARE | MCC Cabinet | | Space for Future Expansion |
| **4U** | SPARE | MCC Cabinet | | Space for Future Expansion |
| **5A** | LINE REACTOR FOR B-02-120 | MCC Cabinet | Refer to Process O&M Manual. | |
| **5D** | BLOWER 2 B-02-120 | MCC Cabinet | Refer to Process O&M Manual. | |
| **5N** | OUTPUT REACTOR FOR B-02-120 | MCC Cabinet | Refer to Process O&M Manual. | |
| **5Q** | SPARE | MCC Cabinet | | Space for Future Expansion |
| **5U** | SPARE | MCC Cabinet | | Space for Future Expansion |
| **6A** | LINE REACTOR FOR B-02-110 | MCC Cabinet | Refer to Process O&M Manual. | |
| **6D** | BLOWER 1 B-02-110 | MCC Cabinet | Refer to Process O&M Manual. | |
| **6N** | OUTPUT REACTOR FOR B-02-110 | MCC Cabinet | Refer to Process O&M Manual. | |
| **6Q** | SPARE | MCC Cabinet | | Space for Future Expansion |
| **6U** | SPARE | MCC Cabinet | | Space for Future Expansion |
| **7A** | TWAS PUMP 1 P-02-610 | MCC Cabinet | Refer to Process O&M Manual. | |
| **7I** | OUTPUT REACTOR FOR P-610 | MCC Cabinet | Refer to Process O&M Manual. | |
| **7L** | TWAS PUMP 2 P-02-620 | MCC Cabinet | Refer to Process O&M Manual. | |

| No. | Component | Location | Function Performed | Remarks |
|---|---|---|---|---|
| **7T** | OUTPUT REACTOR FOR P-02-620 | MCC Cabinet | Refer to Process O&M Manual. | |
| **7W** | SPACE | MCC Cabinet | | Space for Future Expansion |
| **8A** | DAF -2 P-02-440 | MCC Cabinet | Refer to Process O&M Manual. | |
| **8E** | DAF-2 P-02-450 | MCC Cabinet | Refer to Process O&M Manual. | |
| **8I** | DAF-2 P-02-460 | MCC Cabinet | Refer to Process O&M Manual. | |
| **8M** | SPACE | MCC Cabinet | | Space for Future Expansion |
| **8Q** | SPACE | MCC Cabinet | | Space for Future Expansion |
| **8U** | SPACE | MCC Cabinet | | Space for Future Expansion |
| **9A** | DAF-1 SLUDGE SCRAPER DDR-02-311 | MCC Cabinet | Refer to Process O&M Manual. | |
| **9I** | OUTPUT REACTOR FOR DDR-02-311 | MCC Cabinet | | |
| **9L** | DAF-2 SLUDGE SCRAPER DDR-02-321 | MCC Cabinet | Refer to Process O&M Manual. | |
| **9T** | OUTPUT REACTOR FOR DDR-02-321 | MCC Cabinet | | |
| **9W** | SPACE | MCC Cabinet | | Space for Future Expansion |
| **10A** | SPACE | MCC Cabinet | | Space for Future Expansion |
| **10C** | SPACE | MCC Cabinet | | Space for Future Expansion |
| **10E** | SPACE | MCC Cabinet | | Space for Future Expansion |
| **10I** | BFP FEED PUMP 1 P-03-630 | MCC Cabinet | Refer to Process O&M Manual. | |

| No. | Component | Location | Function Performed | Remarks |
|---|---|---|---|---|
| **10Q** | OTPUT REACTOR FOR P-03-630 | MCC Cabinet | | |
| **10T** | SPARE | MCC Cabinet | | Space for Future Expansion |
| **11A** | SPARE | MCC Cabinet | | Space for Future Expansion |
| **11C** | DAF PUMPS P-04-770 | MCC Cabinet | Refer to Process O&M Manual. | |
| **11E** | DAF PUMPS P-04-780 | MCC Cabinet | Refer to Process O&M Manual. | |
| **11G** | DAF PUMPS P-04-790 | MCC Cabinet | Refer to Process O&M Manual. | |
| **11I** | SPARE | MCC Cabinet | | Space for Future Expansion |
| **11M** | SPARE | MCC Cabinet | | Space for Future Expansion |
| **11Q** | SPARE | MCC Cabinet | | Space for Future Expansion |
| **11U** | SPARE | MCC Cabinet | | Space for Future Expansion |
| **12A** | SPARE | MCC Cabinet | | Space for Future Expansion |
| **12E** | BFP PUMPS P-04-970 | MCC Cabinet | Refer to Process O&M Manual. | |
| **12G** | BFP PUMPS P-04-980 | MCC Cabinet | Refer to Process O&M Manual. | |
| **12I** | SPARE | MCC Cabinet | | Space for Future Expansion |
| **12M** | SPARE | MCC Cabinet | | Space for Future Expansion |
| **12Q** | SPARE | MCC Cabinet | | Space for Future Expansion |
| **12U** | SPARE | MCC Cabinet | | Space for Future Expansion |

## Motor Control Centre - 2

| No. | Component | Location | Function Performed | Remarks |
|---|---|---|---|---|
| **1** | Incoming Lugs | MCC Cabinet | Connection to field devices. | |
| **2** | AHU-3 SUPPLY | MCC Cabinet | Refer to Mechanical O&M Manual. | |
| **3** | AHU-3 RETURN | MCC Cabinet | Refer to Mechanical O&M Manual. | |
| **4** | SCR-01-210 | MCC Cabinet | Refer to Process O&M Manual. | |
| **5** | SCR-01-220 | MCC Cabinet | Refer to Process O&M Manual. | |
| **6** | SPD | MCC Cabinet | | |
| **7** | SPARE | MCC Cabinet | | Space for Future Expansion |
| **8** | SPARE | MCC Cabinet | | Space for Future Expansion |
| **9** | SPARE | MCC Cabinet | | Space for Future Expansion |
| **10** | SPARE | MCC Cabinet | | Space for Future Expansion |
| **11** | SPARE | MCC Cabinet | | Space for Future Expansion |
| **12** | SPARE | MCC Cabinet | | Space for Future Expansion |
| **13** | SPARE | MCC Cabinet | | Space for Future Expansion |
| **14** | AHU-2 | MCC Cabinet | Refer to Mechanical O&M Manual. | |
| **15** | SPARE | MCC Cabinet | | Space for Future Expansion |
| **16** | PUMP P-01-110 | MCC Cabinet | Refer to Process O&M Manual. | |
| **17** | PUMP P-01-120 | MCC Cabinet | Refer to Process O&M Manual. | |
| **18** | PUMP P-01-130 | MCC Cabinet | Refer to Process O&M Manual. | |

| No. | Component | Location | Function Performed | Remarks |
|---|---|---|---|---|
| **19** | TERMINAL CONTROL SECTION | MCC Cabinet | | |

**END OF CHAPTER**

# CHAPTER 5

## 5. COMPONENT DETAILS

### 5.1 GENERAL OVERVIEW

The following tables describe the components of the various systems and provide some basic details and settings. For each table, there are drawings that can be referenced to better understand in what part of the Water Treatment Plant the components are located.

### 5.2 POWER DISTRIBUTION SYSTEM

(Refer to Drawing E603 in Appendix A)

The following table identifies the components power distribution system.

| No. | Component | Location | Function Performed | Remarks |
|---|---|---|---|---|
| **1** | 400A Main Distribution Panel | Electrical Room 202 | 400A Main Bus Rating 347/600 Volts | |
| **2** | 400A Transfer Switch | Electrical Room 202 | | |
| **3** | 3P 100 Amp circuit breaker to Panel 6B | Electrical Room 202 | | 100A/3P |
| **4** | 3P 150Amp circuit breaker to CDP-1 | Electrical Room 202 | | 150A/3P |
| **5** | 3P 60Amp circuit breaker to MCC-1 | Electrical Room 202 | | 60A/3P |
| **6** | 3P 200Amp circuit breaker to 4A | Electrical Room 202 | | 200A/3P |
| **7** | 3P 250Amp circuit breaker to MCC-1 | Electrical Room 202 | | 250A/3P |
| **8** | SPD | Electrical Room 202 | | |
| **9** | Central Distribution Panel CDP-1 | Electrical Room 202 | 400A Main Bus Rating 120/208 Volts | |
| **10** | 3P 100A Sub breaker, Panel 2A | Electrical Room 202 | | 100A/3P |
| **11** | 3P 100A Sub breaker, Panel 2B | Electrical Room 202 | | 100A/3P |
| **12** | 3P 100A Sub breaker, Panel 2B | Electrical Room 202 | | 100A/3P |

| No. | Component | Location | Function Performed | Remarks |
|---|---|---|---|---|
| **13** | 112.5kVATransformer to CDP-1 | Electrical Room 202 | | 600Δ/208Y120 |
| **14** | 45kVA Transformer to Panel 4A | Electrical Room 202 | | 600Δ/277Y480 |
| **15** | Distribution panel 2A | Generator room | | 60 Circuits<br>225 Amperes<br>120/208 Volts |
| | Distribution panel 2B | Electrical room 209 | | 42 Circuits<br>225 Amperes<br>120/208 Volts |
| | Distribution panel 2C | Generator room | | 42 Circuits<br>225 Amperes<br>120/208 Volts |
| | Distribution panel 4A | Upper headworks | | 42 Circuits<br>225 Amperes<br>277/480 Volts |
| | Distribution panel 6B | Electrical room 209 | | 42 Circuits<br>250 Amperes<br>600Y/347 Volts |
| | Motor Control Center #1 | Electrical Room 202 | | |
| | Motor Control Center #2 | Electrical room 209 | | Existing |

## 5.3 PLC CONTROL SCHEMATIC

(Refer to Drawing PC-101 to PC-222 in Appendix A)

The following table identifies the components related to the PLC Control Schematics.

| No. | Component | Details | Settings | Remarks |
|---|---|---|---|---|
| 1 | Flow Meter (FQIT-150, FM-01-150) | Endress + Hauser, Promag W400-5W4C2HCKL7/0, 200 mm | | Supplier: Endress + Hauser Canada |
| 2 | Level Indicating Transmitter (LIT-01-100) | SITRANS LUT-420 | | Supplier: Vision Solutions de Procedes |
| 3 | Level Switch (LSLL-01-111) | Xylem ENM-10 Level regulator | | Supplier: Xylem |
| 4 | Level Switch (LSL-01-112) | Xylem ENM-10 Level regulator | | Supplier: Xylem |

| No. | Component | Details | Settings | Remarks |
|---|---|---|---|---|
| 5 | Level Switch (LSH-01-113) | Xylem ENM-10 Level regulator | | Supplier: Xylem |
| 6 | Level Switch (LSHH-01-114) | Xylem ENM-10 Level regulator | | Supplier: Xylem |
| 7 | Motorized Knife Gate Valve (KV-01-211) | Orbinox Model Ex Series 10 | | Supplier: Controles Laurentide |
| 8 | Level Indicating Transmitter (LIT-01-211) | Ultrasonic level sensor CID1, Echomax ST-H, Siemens Hydroranger 200 level control (Vendor Package) | | Supplier: Enviro-Care |
| 9 | Solenoid Valve (SV-01-120) | ASCO, 25 mm (Vendor package) | | Supplier: Enviro-Care |
| 10 | Solenoid Valve (SV-01-122) | ASCO, 12 mm (Vendor package) | | Supplier: Enviro-Care |
| 11 | Motorized Knife Gate Valve (KV-01-221) | Orbinox Model Ex Series 10 | | Supplier: Orbinox |
| 12 | Level Indicating Transmitter (LIT-01-221) | Ultrasonic level sensor CID1, Echomax ST-H, Siemens Hydroranger 200 level control (Vendor Package) | | Supplier: Enviro-Care |
| 13 | Solenoid Valve (SV-01-124) | ASCO, 25 mm (Vendor package) | | Supplier: Enviro-Care |
| 14 | Solenoid Valve (SV-01-126) | ASCO, 12 mm (Vendor package) | | Supplier: Enviro-Care |
| 15 | Motorized Knife Gate Valve (KV-01-112) | Orbinox EX Series, 400 mm | | Supplier: Controles Laurentide |
| 16 | Motorized Knife Gate Valve (KV-01-112A, FV-112a) | Orbinox EX Series, 200 mm | | Supplier: Controles Laurentide |
| 17 | Solenoid Valve (SV-01-113) | Salness filter Model SF6000 (Vendor Package) | | Supplier: Trojan Technologies |
| 18 | Solenoid Valve (SV-01-312) | *Salness filter Model SF6000 (Vendor Package)* | | Supplier: Trojan Technologies |
| 19 | Motorized Knife Gate Valve (KV-01-121, FV-121) | Orbinox EX Series, 350 mm | | Supplier: Controles Laurentide |
| 20 | Level Transmitter (LIT-01-125) | - | | Supplier: - |
| 21 | Pressure Transmitter (PT-01-126) | - | | Supplier: - |
| 22 | Solenoid Valve (SV-01-123) | Salness filter Model SF6000 (Vendor Package) | | Supplier: Trojan Technologies |
| 23 | Solenoid Valve (SV-01-313) | Salness filter Model SF6000 (Vendor Package) | | Supplier: Trojan Technologies |

| No. | Component | Details | Settings | Remarks |
|---|---|---|---|---|
| 24 | Solenoid Valve (SV-01-322) | Salness filter Model SF6000 (Vendor Package) | | Supplier: Trojan Technologies |
| 25 | Solenoid Valve (SV-01-323) | Salness filter Model SF6000 (Vendor Package) | | Supplier: Trojan Technologies |
| 26 | Motorized Knife Gate Valve (KV-01-111, FV-111) | Orbinox Model Ex Series 10 | | Supplier: Controles Laurentide |
| 27 | Level Transmitter (LIT-01-115) | - | | Supplier: - |
| 28 | Pressure Transmitter (PT-01-116) | - | | Supplier: - |
| 29 | Motorized Knife Gate Valve (KV-01-001, FV-001) | Orbinox EX Series, 250 mm | | Supplier: Controles Laurentide |
| 30 | Pressure Switch (PSL-108) | Aerzen GM-15L, 25HP (vendor package) | | Supplier: Veolia Water Technologies Canada |
| 31 | Pressure Switch (PSL-02-118) | Aerzen GM-15L, 25HP (vendor package) | | Supplier: Veolia Water Technologies Canada |
| 32 | Pressure Switch (PSL-02-143) | Aerzen GM-15L, 25HP (vendor package) | | Supplier: Veolia Water Technologies Canada |
| 33 | Pressure Switch (PSL-02-128) | Aerzen GM-15L, 25HP (vendor package) | | Supplier: Veolia Water Technologies Canada |
| 34 | Pressure Switch (PSL-02-146) | Aerzen GM-15L, 25HP (vendor package) | | Supplier: Veolia Water Technologies Canada |
| 35 | Pressure Switch (PSH-02-138) | Aerzen GM-15L, 25HP (vendor package) | | Supplier: Veolia Water Technologies Canada |
| 36 | Pressure transmitter (PIT-02-195) | PMP55-56QX2/0 | | Supplier: Endress + Hauser Canada |
| 37 | Motorized Butterfly Valve (BFV-02-150) | Emerson Keystone K-LOK Series 36, 150 mm | | Supplier: Controles Laurentide |
| 38 | Flow meter (FM-02-152, FE-02-152) | t-mass 651 651-20AAA0AD5RABABA | | Supplier: Endress + Hauser Canada |
| 39 | Motorized Butterfly Valve (BFV-02-155) | Emerson Keystone K-LOK Series 36, 150 mm | | Supplier: Controles Laurentide |
| 40 | Flow meter (FM-02-156, FE-02-156) | t-mass 651 651-20AAA0AD5RABABA | | Supplier: Endress + Hauser Canada |
| 41 | Motorized Butterfly Valve (BFV-02-170) | Emerson Keystone K-LOK Series 36, 150 mm | | Supplier: Controles Laurentide |
| 42 | Flow meter (FM-02-172, FE-02-172) | t-mass 651 651-20AAA0AD5RABABA | | Supplier: Endress + Hauser Canada |

| No. | Component | Details | Settings | Remarks |
|---|---|---|---|---|
| 43 | Motorized Knife Gate Valve (KV-02-211, FV-211) | Orbinox EX Series, 350 mm | | Supplier: Controles Laurentide |
| 44 | Dissolved Oxygen Analyzers (AIT-02-211) | Hach 9020000/LXV404.9900552 (Vendor Package) | | Supplier: Veolia Water Technologies Canada |
| 45 | Level Switch (LSH-02-213) | Xylem ENM-10 Level regulator | | Supplier: Xylem |
| 46 | Dissolved Oxygen Analyzers (AIT-02-212) | Hach 9020000/LXV404.9900552 (Vendor Package) | | Supplier: Veolia Water Technologies Canada |
| 47 | Level Switch (LSH-02-214) | Xylem ENM-10 Level regulator | | Supplier: Xylem |
| 48 | Motorized Knife Gate Valve (KV-02-221, FV-221) | Orbinox EX Series, 350 mm | | Supplier: Controles Laurentide |
| 49 | Dissolved Oxygen Analyzers (AIT-02-221) | Hach 9020000/LXV404.9900552 (Vendor Package) | | Supplier: Veolia Water Technologies Canada |
| 50 | Level Switch (LSH-02-223) | Xylem ENM-10 Level regulator | | Supplier: Xylem |
| 51 | Dissolved Oxygen Analyzers (AIT-02-222) | Hach 9020000/LXV404.9900552 (Vendor Package) | | Supplier: Veolia Water Technologies Canada |
| 52 | Level Switch (LSH-02-224) | Xylem ENM-10 Level regulator | | Supplier: Xylem |
| 53 | Level Switch (LSH-02-330) | Xylem ENM-10 Level regulator | | Supplier: Xylem |
| 54 | Motorized Valve (BFV-02-312, FV-312) | Keystone Series GR DN0350/NPS 14" | | Supplier: Emerson |
| 55 | Motorized Butterfly Valve (BFV-02-625, FV-625) | Bray Series 31 (Vendor Package), 150 mm | | Supplier: Veolia Water Technologies Canada |
| 56 | Level Transmitter (LIT-02-331) | Endress &Hauser (Vendor Package) | | Supplier: Veolia Water Technologies Canada |
| 57 | Level Switch (LSH-02-332) | Xylem ENM-10 (Vendor Package) | | Supplier: Veolia Water Technologies Canada |
| 58 | Level Switch (LSL-02-333) | Xylem ENM-10 (Vendor Package) | | Supplier: Veolia Water Technologies Canada |
| 59 | TSS Analyzer (AIT-02-334) | Hach Solitax LXV328.99.10002 (Vendor Package) | | Supplier: Veolia Water Technologies Canada |

| No. | Component | Details | Settings | Remarks |
|---|---|---|---|---|
| 60 | Flow meter (FE-02-317) | Endress & Hauser 50W80ULGA1RC2BAAW+1 (Vendor Package) 150 mm | | Supplier: Veolia Water Technologies Canada |
| 61 | Motorized Butterfly Valve (BFV-02-511) | Bray Series 31 (Vendor Package), 150 mm | | Supplier: Veolia Water Technologies Canada |
| 62 | Motorized Butterfly Valve (BFV-02-512) | Flow-tek 7108-3R-R-L (Vendor Package), 50 mm | | Supplier: Veolia Water Technologies Canada |
| 63 | Motorized Butterfly Valve (BFV-02-521) | Bray Series 31 (Vendor Package), 150 mm | | Supplier: Veolia Water Technologies Canada |
| 64 | Motorized Butterfly Valve (BFV-02-522) | Flow-tek 7108-3R-R-L (Vendor Package), 50 mm | | Supplier: Veolia Water Technologies Canada |
| 65 | Pressure Transmitter (PT-02-527) | Endress & Hauser PMP51-CA21JD1PGDRKJA1 (Vendor Package) | | Supplier: Veolia Water Technologies Canada |
| 66 | Motorized Valve (BFV-02-332, FV-332) | Keystone Series GR DN0350/NPS 14" | | Supplier: Emerson |
| 67 | Motorized Butterfly Valve (BFV-02-645, FV-645) | Bray Series 31 (Vendor Package), 150 mm | | Supplier: Veolia Water Technologies Canada |
| 68 | Level Transmitter (LIT-02-341) | Endress &Hauser (Vendor Package) | | Supplier: Veolia Water Technologies Canada |
| 69 | Level Switch (LSH-02-342) | Xylem ENM-10 (Vendor Package) | | Supplier: Veolia Water Technologies Canada |
| 70 | Level Switch (LSL-02-343) | Xylem ENM-10 (Vendor Package) | | Supplier: Veolia Water Technologies Canada |
| 71 | TSS Analyzer (AIT-02-344) | Hach Solitax LXV328.99.10002 (Vendor Package) | | Supplier: Veolia Water Technologies Canada |
| 72 | Flow meter (FE-02-328) | Secondary Treatment - Lower | Final Effluent flowmeter | Supplier: |
| 73 | Flow meter (FE-02-327) | Endress & Hauser 50W80ULGA1RC2BAAW+1 (Vendor Package), 150 mm | | Supplier: Veolia Water Technologies Canada |
| 74 | Motorized Butterfly Valve (BFV-02-531) | Bray Series 31 (Vendor Package), 150 mm | | Supplier: Veolia Water Technologies Canada |

| No. | Component | Details | Settings | Remarks |
|---|---|---|---|---|
| 75 | Motorized Butterfly Valve (BFV-02-532) | Flow-tek 7108-3R-R-L (Vendor Package), 50 mm | | Supplier: Veolia Water Technologies Canada |
| 76 | Motorized Butterfly Valve (BFV-02-542) | Bray Series 31 (Vendor Package), 150 mm | | Supplier: Veolia Water Technologies Canada |
| 77 | Motorized Butterfly Valve (BFV-02-542) | Flow-tek 7108-3R-R-L (Vendor Package), 50 mm | | Supplier: Veolia Water Technologies Canada |
| 78 | Pressure Transmitter (PT-02-547) | Endress & Hauser PMP51-CA21JD1PGDRKJA1 (Vendor Package) | | Supplier: Veolia Water Technologies Canada |
| 79 | Pressure Switch (PSL-04-711) | Allen Bradley 836T-T253J (Vendor Package) | | Supplier: Veolia Water Technologies Canada |
| 80 | Pressure Switch (PSL-04-712) | Vendor Package | | Supplier: Veolia Water Technologies Canada |
| 81 | Solenoid Valve (SV-04-713) | Tekno Valve ASCO 8345G001-120VAC (Vendor Package), 6 mm | | Supplier: Veolia Water Technologies Canada |
| 82 | Solenoid Valve (SV-04-714) | Tekno Valve ASCO 8210G004-120VAC (Vendor Package), 25 mm | | Supplier: Veolia Water Technologies Canada |
| 83 | Polymer Analyzer (AIT-04-741) | Hach LXV404.99.00552 (Vendor Package) | | Supplier: Veolia Water Technologies Canada |
| 84 | Level Transmitter (LIT-04-742) | Endress & Hausser PMC21-CA1V1ECVXJJ (Vendor Package) | | Supplier: Veolia Water Technologies Canada |
| 85 | Level Switch (LSL-04-710) | Vendor Package | | Supplier: Veolia Water Technologies Canada |
| 86 | Temperature Indication (TIT-04-741) | Vendor Package | | Supplier: Veolia Water Technologies Canada |
| 87 | Level Transmitter (LIT-04-746) | Endress & Hausser PMC21-CA1V1ECVXJJ (Vendor Package) | | Supplier: Veolia Water Technologies Canada |
| 88 | Polymer Analyzer (AE-04-745) | Vendor Package | | Supplier: Veolia Water Technologies Canada |
| 89 | Motorized Butterfly Valve (BFV-04-744) | Vendor Package | | Supplier: Veolia Water Technologies Canada |

| No. | Component | Details | Settings | Remarks |
|---|---|---|---|---|
| 90 | Temperature Element (TE-04-769) | Vendor Package | | Supplier: Veolia Water Technologies Canada |
| 91 | Pressure Switch (PSH-04-787) | Vendor Package | | Supplier: Veolia Water Technologies Canada |
| 92 | Temperature Element (TE-04-770) | Vendor Package | | Supplier: Veolia Water Technologies Canada |
| 93 | Pressure Switch (PSH-04-793) | Vendor Package | | Supplier: Veolia Water Technologies Canada |
| 94 | Temperature Element (TE-04-771) | Vendor Package | | Supplier: Veolia Water Technologies Canada |
| 95 | Pressure Switch (PSH-04-790) | Vendor Package | | Supplier: Veolia Water Technologies Canada |
| 96 | Solenoid Valve (SV-04-783) | Tekno Valve ASCO 8210G094 (Vendor Package), 13 mm | | Supplier: Veolia Water Technologies Canada |
| 97 | Solenoid Valve (SV-04-784) | Tekno Valve ASCO 8210G094 (Vendor Package), 13 mm | | Supplier: Veolia Water Technologies Canada |
| 98 | Flow Indicator (FI-04-785) | Chemline FCA00401 (Vendor Package), 12 mm | | Supplier: Veolia Water Technologies Canada |
| 99 | Flow Indicator (FI-04-786) | Chemline FCA00401 (Vendor Package), 12 mm | | Supplier: Veolia Water Technologies Canada |
| 100 | Flow Transmitter (FIT-04-798) | Promag 50H08, DN08 5/16" | | Supplier: Endress + Hauser Canada |
| 101 | Flow Transmitter (FIT-04-799) | Promag 50H08, DN08 5/16" | | Supplier: Endress + Hauser Canada |
| 102 | Pressure Switch (PSH-02-619) | B-Series Switches | | Supplier: Ashcroft |
| 103 | Pressure Switch (PSH-02-639) | B-Series Switches | | Supplier: Ashcroft |
| 104 | Level Element (LE-03-111) | Endress + Hauser, Prosonic S FDU91-SN6AA | | Supplier: Endress + Hauser Canada |
| 105 | Level Switch (LSHH-03-112) | Xylem ENM-10 Level regulator | | Supplier: Xylem |
| 106 | Level Switch (LSHH-03-113) | Xylem ENM-10 Level regulator | | Supplier: Xylem |
| 107 | Level Transmitter (LE-03-121) | Endress + Hauser, Prosonic S FDU91-SN6AA | | Supplier: Endress + Hauser Canada |

| No. | Component | Details | Settings | Remarks |
|---|---|---|---|---|
| 108 | Level Switch (LSHH-03-122) | Xylem ENM-10 Level regulator | | Supplier: Xylem |
| 109 | Level Switch (LSHH-03-123) | Xylem ENM-10 Level regulator | | Supplier: Xylem |
| 110 | Pressure Switch (PSH-03-669) | B-Series Switches | | Supplier: Ashcroft |
| 111 | Pressure Switch (PSH-03-689) | B-Series Switches | | Supplier: Ashcroft |
| 112 | Pressure Differential Transmitter (PDIT-03-640) | Deltabar-PMD75 | | Supplier: Endress + Hauser Canada |
| 113 | Flow Meter (FE-695, FM-03-695) | Endress + Hauser Promag W400-5W4C3F-C6ALHA0DUA1K0A+Z1, 350 mm | | Supplier: Endress + Hauser Canada |
| 114 | Pressure Indicating Transmitter (PIT-03-606) | Phoenix LC-1200LS (Vendor Package) | | Supplier: Phoenix Process Equipment Co. |
| 115 | Pressure Switch (PSL-04-911) | Vendor Package | | Supplier: |
| 116 | Solenoid Valve (SV-04-913) | Vendor Package | | Supplier: |
| 117 | Solenoid Valve (SV-04-914) | Vendor Package | | Supplier: |
| 118 | Level Switch (LSL-04-910) | Vendor Package | | Supplier: |
| 119 | Temperature Transmitter (TIT-04-941) | Vendor Package | | Supplier: |
| 120 | Polymer Analyzer (AIT-04-941) | Vendor Package | | Supplier: |
| 121 | Level Transmitter (LIT-04-942) | Vendor Package | | Supplier: |
| 122 | Motorized Butterfly Valve (BV-04-944) | Vendor Package | | Supplier: |
| 123 | Polymer Analyzer (AE-04-945) | Vendor Package | | Supplier: |
| 124 | Level Transmitter (LIT-04-946) | Vendor Package | | Supplier: |
| 125 | Temperature Element (TE-04-966) | Vendor Package | | Supplier: |
| 126 | Pressure Switch (PSH-04-987) | Vendor Package | | Supplier: |
| 127 | Temperature Element (TE-04-967) | Vendor Package | | Supplier: |
| 128 | Pressure Switch (PSH-04-990) | Vendor Package | | Supplier: |

| No. | Component | Details | Settings | Remarks |
|---|---|---|---|---|
| 129 | Flow Meter (FIT-04-999, FM-04-999) | Promag 50H15, DN15 /2" | | Supplier: Endress + Hauser Canada |
| 130 | Solenoid Valve (SV-04-982) | - | | Supplier: - |
| 131 | Gas Analyzer (AIT-01-901) | Ultima X5000 | | Supplier: MSA |
| 132 | Gas Analyzer (AIT-01-902) | Ultima X5000 | | Supplier: MSA |
| 133 | Horn (UA-01-940) | Bulletin 855 Electronic Horn | | Supplier: Rockwell Automation |
| 134 | Beacon (UL-01-920A) | Blue H2S Pendant Mount | | Supplier: Applied Strobe Technology |
| 135 | Beacon (UL-01-920B) | Blue H2S Pendant Mount | | Supplier: Applied Strobe Technology |
| 136 | Beacon (UL-01-920C) | Blue H2S Pendant Mount | | Supplier: Applied Strobe Technology |
| 137 | Beacon (UL-01-920D) | Blue H2S Pendant Mount | | Supplier: Applied Strobe Technology |
| 138 | Beacon (UL-01-920E) | Blue H2S Pendant Mount | | Supplier: Applied Strobe Technology |
| 139 | Beacon (UL-01-930A) | Amber LEL Pendant Mount | | Supplier: Applied Strobe Technology |
| 140 | Beacon (UL-01-930B) | Amber LEL Pendant Mount | | Supplier: Applied Strobe Technology |
| 141 | Beacon (UL-01-930C) | Amber LEL Pendant Mount | | Supplier: Applied Strobe Technology |
| 142 | Beacon (UL-01-930D) | Amber LEL Pendant Mount | | Supplier: Applied Strobe Technology |
| 143 | Beacon (UL-01-930E) | Amber LEL Pendant Mount | | Supplier: Applied Strobe Technology |
| 144 | Temperature Transmitter (TT-01-950) | - | | Supplier: - |
| 145 | Gas Analyzer (AIT-01-903) | Ultima X5000 | | Supplier: MSA |
| 146 | Gas Analyzer (AIT-01-904) | Ultima X5000 | | Supplier: MSA |
| 147 | Horn (UA-01-941) | Bulletin 855 Electronic Horn | | Supplier: Rockwell Automation |
| 148 | Beacon (UL-01-921A) | Blue H2S Pendant Mount | | Supplier: Applied Strobe Technology |
| 149 | Beacon (UL-01-921B) | Blue H2S Pendant Mount | | Supplier: Applied Strobe Technology |
| 150 | Beacon (UL-01-921C) | Blue H2S Pendant Mount | | Supplier: Applied Strobe Technology |

| No. | Component | Details | Settings | Remarks |
|---|---|---|---|---|
| 151 | Beacon (UL-01-931A) | Amber LEL Pendant Mount | | Supplier: Applied Strobe Technology |
| 152 | Beacon (UL-01-931B) | Amber LEL Pendant Mount | | Supplier: Applied Strobe Technology |
| 153 | Beacon (UL-01-931C) | Amber LEL Pendant Mount | | Supplier: Applied Strobe Technology |
| 154 | Temperature Transmitter (TT-01-951) | - | | Supplier: - |
| 155 | Gas Analyzer (AIT-02-907) | Ultima X5000 | | Supplier: MSA |
| 156 | Gas Analyzer (AIT-02-909) | Ultima X5000 | | Supplier: MSA |
| 157 | Gas Analyzer (AIT-02-908) | Ultima X5000 | | Supplier: MSA |
| 158 | Gas Analyzer (AIT-02-905) | Ultima X5000 | | Supplier: MSA |
| 159 | Temperature Transmitter (TT-0-954) | - | | Supplier: - |
| 160 | Beacon (UL-02-922A) | Blue H2S Pendant Mount | | Supplier: Applied Strobe Technology |
| 161 | Beacon (UL-02-922B) | Blue H2S Pendant Mount | | Supplier: Applied Strobe Technology |
| 162 | Beacon (UL-03-922C) | Blue H2S Pendant Mount | | Supplier: Applied Strobe Technology |
| 163 | Horn (UA-02-942) | Bulletin 855 Electronic Horn | | Supplier: Rockwell Automation |
| 164 | Beacon (UL-02-923A) | Blue H2S Pendant Mount | | Supplier: Applied Strobe Technology |
| 165 | Beacon (UL-02-923B) | Blue H2S Pendant Mount | | Supplier: Applied Strobe Technology |
| 166 | Beacon (UL-02-923C) | Blue H2S Pendant Mount | | Supplier: Applied Strobe Technology |
| 167 | Beacon (UL-02-923D) | Blue H2S Pendant Mount | | Supplier: Applied Strobe Technology |
| 168 | Horn (UA-02-943) | Bulletin 855 Electronic Horn | | Supplier: Rockwell Automation |
| 169 | Horn (UA-02-944) | Bulletin 855 Electronic Horn | | Supplier: Rockwell Automation |
| 170 | Flow Transmitter (FQIT-04-300) | - | | Supplier: - |
| 171 | Temperature Transmitter (TT-02-952) | - | | Supplier: - |

| No. | Component | Details | Settings | Remarks |
|---|---|---|---|---|
| 172 | Temperature Transmitter (TT-02-953) | - | | Supplier: - |
| 173 | Gas Analyzer (AIT-02-801) | Ultima X5000 | | Supplier: MSA |
| 174 | Gas Analyzer (AIT-03-910) | Ultima X5000 | | Supplier: MSA |
| 175 | Gas Analyzer (AIT-03-906) | Ultima X5000 | | Supplier: MSA |
| 176 | Temperature Transmitter (TT-03-955) | - | | Supplier: - |
| | Smoke Detection (AS-01-960) | IO1000G | | Supplier: Edwards United Technology |

## 5.4 MOTOR CONTROL CENTRE

(Refer to Drawing E501 in Appendix A)

The following table identifies the components of the motor control centre.

**Motor Control Centre - 1**

| No. | Component | Details | Setting | Remarks |
|---|---|---|---|---|
| **1A** | Incoming Lugs | MCC Cabinet | | |
| **1U** | SPARE | MCC Cabinet | | Space for Future Expansion |
| **2A** | SPD | MCC Cabinet | | Space for Future Expansion |
| **2C** | DAF-1 P-02-410 | MCC Cabinet | 60A | |
| **2G** | DAF-1 P-02-420 | MCC Cabinet | 60A | |
| **2K** | DAF-1 P-02-430 | MCC Cabinet | 60A | Expansion |
| **2O** | SPARE | MCC Cabinet | | Space for Future Expansion |
| **2S** | SPARE | MCC Cabinet | | Space for Future Expansion |
| **2W** | SPARE | MCC Cabinet | | Space for Future Expansion |
| **3A** | SPARE | MCC Cabinet | | Space for Future Expansion |
| **3E** | SPARE | MCC Cabinet | | Space for Future Expansion |
| **3G** | SPARE | MCC Cabinet | | Space for Future Expansion |
| **3K** | BFP FEED PUMP P-03-640 | MCC Cabinet | 30A | |
| **3S** | OUTPUT REACTOR FOR P-03-640 | MCC Cabinet | | |
| **3V** | SPARE | MCC Cabinet | | Space for Future Expansion |
| **4A** | LINE REACTOR FOR B-102-130 | MCC Cabinet | | |
| **4D** | BLOWER 3 B-02-130 | MCC Cabinet | 60A | |

| No. | Component | Details | Setting | Remarks |
|---|---|---|---|---|
| **4N** | OUTPUT REACTOR FOR B-02-130 | MCC Cabinet | | |
| **4Q** | SPARE | MCC Cabinet | | Space for Future Expansion |
| **4U** | SPARE | MCC Cabinet | | Space for Future Expansion |
| **5A** | LINE REACTOR FOR B-02-120 | MCC Cabinet | | |
| **5D** | BLOWER 2 B-02-120 | MCC Cabinet | 60A | |
| **5N** | OUTPUT REACTOR FOR B-02-120 | MCC Cabinet | | |
| **5Q** | SPARE | MCC Cabinet | | Space for Future Expansion |
| **5U** | SPARE | MCC Cabinet | | Space for Future Expansion |
| **6A** | LINE REACTOR FOR B-02-110 | MCC Cabinet | | |
| **6D** | BLOWER 1 B-02-110 | MCC Cabinet | 60A | |
| **6N** | OUTPUT REACTOR FOR B-02-110 | MCC Cabinet | | |
| **6Q** | SPARE | MCC Cabinet | | Space for Future Expansion |
| **6U** | SPARE | MCC Cabinet | | Space for Future Expansion |
| **7A** | TWAS PUMP 1 P-02-610 | MCC Cabinet | 30A | |
| **7I** | OUTPUT REACTOR FOR P-610 | MCC Cabinet | | |
| **7L** | TWAS PUMP 2 P-02-620 | MCC Cabinet | 30A | |
| **7T** | OUTPUT REACTOR FOR P-02-620 | MCC Cabinet | | |
| **7W** | SPACE | MCC Cabinet | | Space for Future Expansion |
| **8A** | DAF -2 P-02-440 | MCC Cabinet | 60A | |
| **8E** | DAF-2 P-02-450 | MCC Cabinet | 60A | |

| No. | Component | Details | Setting | Remarks |
|---|---|---|---|---|
| **8I** | DAF-2 P-02-460 | MCC Cabinet | 60A | |
| **8M** | SPACE | MCC Cabinet | | Space for Future Expansion |
| **8Q** | SPACE | MCC Cabinet | | Space for Future Expansion |
| **8U** | SPACE | MCC Cabinet | | Space for Future Expansion |
| **9A** | DAF-1 SLUDGE SCRAPER DDR-02-311 | MCC Cabinet | 30A | |
| **9I** | OUTPUT REACTOR FOR DDR-02-311 | MCC Cabinet | | |
| **9L** | DAF-2 SLUDGE SCRAPER DDR-02-321 | MCC Cabinet | 30A | |
| **9T** | OUTPUT REACTOR FOR DDR-02-321 | MCC Cabinet | | |
| **9W** | SPACE | MCC Cabinet | | Space for Future Expansion |
| **10A** | SPACE | MCC Cabinet | | Space for Future Expansion |
| **10C** | SPACE | MCC Cabinet | | Space for Future Expansion |
| **10E** | SPACE | MCC Cabinet | | Space for Future Expansion |
| **10I** | BFP FEED PUMP 1 P-03-630 | MCC Cabinet | 30A | |
| **10Q** | OTPUT REACTOR FOR P-03-630 | MCC Cabinet | | |
| **10T** | SPARE | MCC Cabinet | | Space for Future Expansion |
| **11A** | SPARE | MCC Cabinet | | Space for Future Expansion |
| **11C** | DAF PUMPS P-04-770 | MCC Cabinet | 30A | |
| **11E** | DAF PUMPS P-04-780 | MCC Cabinet | 30A | |
| **11G** | DAF PUMPS P-04-790 | MCC Cabinet | 30A | |

| No. | Component | Details | Setting | Remarks |
|---|---|---|---|---|
| **11I** | SPARE | MCC Cabinet | | Space for Future Expansion |
| **11M** | SPARE | MCC Cabinet | | Space for Future Expansion |
| **11Q** | SPARE | MCC Cabinet | | Space for Future Expansion |
| **11U** | SPARE | MCC Cabinet | | Space for Future Expansion |
| **12A** | SPARE | MCC Cabinet | | Space for Future Expansion |
| **12E** | BFP PUMPS P-04-970 | MCC Cabinet | 30A | |
| **12G** | BFP PUMPS P-04-980 | MCC Cabinet | 30A | |
| **12I** | SPARE | MCC Cabinet | | Space for Future Expansion |
| **12M** | SPARE | MCC Cabinet | | Space for Future Expansion |
| **12Q** | SPARE | MCC Cabinet | | Space for Future Expansion |
| **12U** | SPARE | MCC Cabinet | | Space for Future Expansion |

**Motor Control Centre - 2**

| No. | Component | Details | Setting | Remarks |
|---|---|---|---|---|
| **1** | Incoming Lugs | | | |
| **2** | AHU-3 SUPPLY | | 15A | |
| **3** | AHU-3 RETURN | | 15A | |
| **4** | SCR-01-210 | | 15A | |
| **5** | SCR-01-220 | | 15A | |
| **6** | SPD | | 30A | |
| **7** | SPARE | | | Space for Future Expansion |
| **8** | SPARE | | | Space for Future Expansion |

| No. | Component | Details | Setting | Remarks |
|---|---|---|---|---|
| **9** | SPARE | | 15A | Space for Future Expansion |
| **10** | SPARE | | 15A | Space for Future Expansion |
| **11** | SPARE | | 15A | Space for Future Expansion |
| **12** | SPARE | | 15A | Space for Future Expansion |
| **13** | SPARE | | 15A | Space for Future Expansion |
| **14** | AHU-2 | | 25A | |
| **15** | SPARE | | 15A | Space for Future Expansion |
| **16** | PUMP P-01-110 | | 60A | |
| **17** | PUMP P-01-120 | | 60A | |
| **18** | PUMP P-01-130 | | 60A | |
| **19** | TERMINAL CONTROL SECTION | | | |

**END OF CHAPTER 5**

# CHAPTER 6

# 6. OPERATING PROCEDURES

## 6.1 GENERAL

The operations portion of this manual should be read in conjunction with Chapter 6 of the Process and Mechanical Operations and Maintenance Manuals. The operating procedures described in this section will relate to the WWTP Electrical and Controls systems.

## 6.2 FACILITY POWER AND STANDBY POWER SYSTEM

The WWTP facility is powered by existing local service. A Standby Generator automatically starts and assumes the full plant load on power failure. The power is switched by a Thomson Power System. Automatic louvers control the temperature in the Generator Room.

### 6.2.1 Controls

#### 6.2.1.1 Generator

The generator has a control panel attached with control switches and monitoring indicators. The main control has a rotary switch to select between OFF RESET, AUTO, MANUAL START and COOLDOWN STOP. There is an E-stop that can be used to instantly stop and disconnect the generator from the electrical system.

There is a toggle switch labelled Panel Lights that can be used to supply light to the controls.

The Control Panel has a monitoring interface that displays monitored information and a set of LED lamps for alarm status. These are discussed in detail in the manufacturer's O&M Manual.

#### 6.2.1.2 Transfer Switch

The transfer switch is located in the Electrical Room 202. It has a selector switch for AUTO and TEST, a green indicator lamp for Normal Power and a Red indicator lamp for Emergency Power. It also has a rotary handle that shows the present operating mode and that can be used for manual operation. The manual handle drives the switch when turned in the counter-clockwise direction and freewheels when turned in the clockwise direction. An indicator is located behind the handle and points to the present switch position (Normal, Off, Emergency, Off).

#### 6.2.1.3 Ventilation Louvres

The ventilation louvers are controlled locally by a dedicated temperature controller. This is described in detail in the Building Mechanical O&M Manual.

### 6.2.2 Emergency Generator

#### 6.2.2.1 Automatic Operation

With the selector switch in AUTO, the generator will start when line power fails. It operates until line power is restored. When line power is restored, it continues to run under no load for ___ minutes to allow the engine to cool down.

#### 6.2.2.2 Manual Operation

The generator can be started manually by placing the selector switch in the MAN START position. The generator will run regardless of the line power condition. The generator is stopped by placing the selector switch in the COOL DOWN STOP position. The generator will go through a cool down cycle and then stop. If the generator has not been running under load, the switch can be set directly to the OFF RESET or AUTO position.

#### 6.2.2.3 Emergency Stop

If the Emergency Stop button is pushed, the main breaker will be tripped and the generator will stop. Before the breaker can be reset, the selector switch must be set to the OFF RESET position. When the breaker is reset, the selector switch can then be set to the desired position.

### 6.2.3 Transfer Switch

#### 6.2.3.1 Automatic Operation

With the selector switch in the AUTO position, the transfer switch will automatically switch to backup power on loss of line power. On return of line power, it will first switch to the Off position. If the power is stable, it continues on to the Normal position.

#### 6.2.3.2 Test

When the selector switch is set to the TEST position, the Emergency Generator will start and the Transfer Switch will switch the load to the generator. When the switch is returned to the AUTO position, the switch returns the load to the normal line power. The generator shuts down after its Cool Down period.

#### 6.2.3.3 Alternate Test Procedure

The system can be fully tested by opening the Main Incoming Breaker located to the right of the Transfer Switch. This simulates a power failure and tests all components of the system, including the power sensor. When the breaker is reset, the Transfer Switch returns the load to normal line power, and the generator shuts down after its Cool Down period.

**END OF CHAPER 6**

# CHAPTER 7

# 7. MAINTENANCE PROCEDURES AND SERVICE INFORMATION

## 7.1 GENERAL

To ensure uninterrupted use, equipment should be regularly inspected, tested, and proper repairs made and recorded. The objective is to minimize equipment operating problems and prevent failures by making minor or necessary repairs before major difficulties occur. The importance of record keeping cannot be over-emphasized. Good maintenance protects the owner's interest with manufacturer warranties, continuity, or maintenance despite staff turnovers and equipment reliability track record.

Environmental and operating conditions are key elements affecting proper and reliable operation of equipment. Costly repairs can be minimized if the following items are attended to:

**KEEP IT CLEAN**

**KEEP IT TIGHT**

### 7.1.1 Keep It Clean

Day-to day accumulation of normal atmospheric particles, lint, metallic particles form mechanical equipment cause problems with equipment over a long period of time. An accumulation affects equipment reliability and operating life. ALL equipment should be regularly cleaned.

### 7.1.2 Keep It Tight

All contactors and control devices operate with high speed movement. This motion creates vibration that can loosen hardware and other parts. External vibration from equipment may cause the loosening of hardware and connections in any equipment. All hardware and connections should be tightened regularly. This simple procedure takes only a small amount of time and can save hours of searching for intermittent problems. All rotating equipment such as motors are affected by vibrations. This can cause alignment problems, which can result in bearing failures.

### 7.1.3 Renewal Parts

Availability of parts can be a major problem these days as distributors are keeping very low inventories in a move to economize. This may make any part a long delivery item. For this reason local distributors should be contacted and parts availability assessed.

Any critical part affecting the reliability of the system should be ordered, recorded and stored by the maintenance department.

### 7.1.4 Parts and Equipment Ordering Procedure

During the first year of operation, the Contractor should be contacted for any replacement parts required. This will ensure that parts covered by warranty will be replaced under warranty. Failure to contact the Contractor may result in difficulties in obtaining warranty replacement.

Following the first year of operation, it is recommended that the Contractor also be contacted as many of the suppliers have a wholesale only policy. If it is necessary to purchase parts directly from the original supplier, the following information is required.

**Make**

**Model No.**

**Year of Installation**

**Installing Contractor**

**Description of Part Required (i.e. Fan Bearing)**

**Part No. if Available**

When quoting a part number contained in manufacturer's catalogue, always provide the date of the catalogue you are referring to, as these numbers are often subject to change. The equipment supplier will have the latest edition of the manufacturer's catalogue.

If the original supplier is no longer in business, contact the contractor who will be able to suggest an alternate source of supply.

### 7.1.5 Scheduled Preventive Maintenance Program

Scheduled preventive maintenance is an effective means to improve services from systems and equipment. Where failure of equipment can result in shutdown, scheduled preventive maintenance is an economical alternative.

## 7.2 MAINTENANCE SCHEDULE

Maintenance to be conducted as per recommendations of components suppliers. **Appendix C** provide a suggested maintenance schedule.

## 7.3 MAINTENANCE MANUALS

For all maintenance and inspection schedules, please refer to the manuals provided by component suppliers (**Appendix D**) and manufacturers and as shown in maintenance schedule (**Appendix C**), shop drawings (**Appendix E**) and contact service information (**Appendix F**). Maintenance manuals of the following major process components are provided in **Appendix D**.

## 7.4 SPARE PARTS LIST

Spare part list is provided in **Appendix E**.

**END OF CHAPTER 7**

# CHAPTER 8

## 8. TESTING AND CERTIFICATION

Testing records, certificates and warranties are provided in **Appendix G**.

# CHAPTER 9

## 9. CONTACT SERVICE INFORMATION

Owner, consulting engineer, contractors and main suppliers contact service information is grouped in **Appendix F**.

# APPENDIX

# APPENDIX A

# AS-BUILT DRAWINGS

STANTEC DRAWINGS SUPPLIED IN A SEPARATE BINDER

# WWTP UPGRADE
# IQALUIT - WASTE WATER PROJECT
# CONTROL PANEL LCP-02-300
# PROJET #5000218036

| REV | DESCRIPTION | DATE | REVD | CHKD | APVD | ECN |
|---|---|---|---|---|---|---|
| 5 | AS BUILT \|\| FIELD MODIFICATION | 2020-02-28 | SB | RA | – | – |
| 4 | AS BUILT \|\| FIELD MODIFICATION | 2019-07-29 | JC | RA | – | – |
| 3 | AS BUILT | 2019-03-27 | HZ | RA | – | – |
| 2 | FOR FABRICATION | 2019-03-19 | HZ | RA | – | – |
| 1 | FOR APPROVAL | 2019-01-03 | RA | HZ | – | – |

**CONFIDENTIALITY AND INTELLECTUAL PROPERTY NOTICE**
ALL INFORMATION CONTAINED IN THIS DOCUMENT IS THE SOLE PROPERTY OF VEOLIA WATER TECHNOLOGIES CANADA INC. AND IS PROTECTED BY ALL APPLICABLE LAWS, INCLUDING BUT NOT LIMITED TO COPYRIGHT AND OTHER INTELLECTUAL PROPERTY LAWS. THE DESIGN CONCEPTS AND INFORMATION CONTAINED HEREIN ARE PROPRIETARY TO V.W.T AND ARE SUBMITTED IN CONFIDENCE. THEY ARE NOT TRANSFERABLE. THEY MUST BE USED ONLY FOR THE PURPOSE FOR WHICH THE DOCUMENT IS EXPRESSLY SUBMITTED AND NO IMPLICIT LICENCE IS GRANTED OTHERWISE BY THE SUBMISSION OF THIS DOCUMENT. THEY ARE CONFIDENTIAL AND PRIVILEGED INFORMATION OF V.W.T. AND THEY MUST NOT BE DISCLOSED, REPRODUCED, LOANED, REMITTED OR USED IN ANY OTHER MANNER WITHOUT THE EXPRESS WRITTEN CONSENT OF V.W.T. V.W.T. ASSUMES NO RESPONSIBILITY OR LIABILITY FOR THE USE OF THIS DOCUMENT OR THE DESIGN CONCEPTS AND INFORMATION CONTAINED HEREIN FOR ANOTHER PROJECT, OR IN A MANNER THAT DOES NOT RELATE TO THE FITNESS OR PURPOSE OF THIS DOCUMENT. IN NO EVENT SHALL THIS DOCUMENT OR THE DESIGN CONCEPTS AND INFORMATION CONTAINED HEREIN BE USED IN A MANNER DETRIMENTAL TO THE INTEREST OF V.W.T. ALL COPYRIGHT, PATENT AND OTHER INTELLECTUAL PROPERTY RIGHTS ARE RESERVED. ACCEPTANCE OF THE DELIVERY OF THIS DOCUMENT CONSTITUTES AGREEMENT TO THESE TERMS AND CONDITIONS.

| | |
|---|---|
| DESIGNER | DATE |
| – | – |
| CHECKER | DATE |
| – | – |
| ENGINEER | DATE |
| – | – |
| SCALE: | N/A |

TITLE
CONTROL PANEL LCP-02-300
TITLE PAGE

CLIENT
WWTP UPGRADE
CITY OF IQALUIT

VEOLIA
VEOLIA WATER TECHNOLOGIES CANADA INC. 4105 Sartelon, Saint-Laurent, Qc, Canada. Tel: (514) 334-7230

| PROJECT DRAWING | INTERNAL | SHEET | REV |
|---|---|---|---|
| 5000218036-EPL – 0001-AU-VWT | – | 01 OF 06 | 5 |

BAR = 1" AT PLOT SCALE
REF: A6798A
STD: "D" 11x17
Mar 09, 2020 15:31:44 – G:\Projets A67XX\A6798A @ A6798D – VEOLIA – 5000218036 Iqaluit WWTP Upgrade\DOC\DESSIN\000-DRAWINGS\LCP-02-300\REV 5\5000218036-EPL-0001-AU-VWT-001.dwg – sbouya

| DESCRIPTION | DRAWING NUMBER |
|---|---|
| MAIN CONTROL PANEL LCP-02-300 | |
| TITLE PAGE | 5000218036-EPL-0001-AU-VWT-001 |
| LEGEND & DRAWING LIST | 5000218036-EPL-0001-AU-VWT-002 |
| EXTERNAL LAYOUT | 5000218036-EPL-0001-AU-VWT-003 |
| INTERNAL LAYOUT | 5000218036-EPL-0001-AU-VWT-004 |
| TERMINAL LAYOUT | 5000218036-EPL-0001-AU-VWT-005 |
| BILL OF MATERIAL | 5000218036-EPL-0001-AU-VWT-006 |
| | |
| ELECTRICAL SCHEMATICS | 5000218036-ELD-0001-AU-VWT-001 |
| ELECTRICAL SCHEMATICS | 5000218036-ELD-0001-AU-VWT-002 |
| ELECTRICAL SCHEMATICS | 5000218036-ELD-0001-AU-VWT-003 |
| ELECTRICAL SCHEMATICS | 5000218036-ELD-0001-AU-VWT-004 |
| ELECTRICAL SCHEMATICS | 5000218036-ELD-0001-AU-VWT-005 |
| ELECTRICAL SCHEMATICS | 5000218036-ELD-0001-AU-VWT-006 |
| ELECTRICAL SCHEMATICS | 5000218036-ELD-0001-AU-VWT-007 |
| ELECTRICAL SCHEMATICS | 5000218036-ELD-0001-AU-VWT-008 |
| ELECTRICAL SCHEMATICS | 5000218036-ELD-0001-AU-VWT-009 |
| ELECTRICAL SCHEMATICS | 5000218036-ELD-0001-AU-VWT-010 |
| ELECTRICAL SCHEMATICS | 5000218036-ELD-0001-AU-VWT-011 |
| ELECTRICAL SCHEMATICS | 5000218036-ELD-0001-AU-VWT-012 |
| ELECTRICAL SCHEMATICS | 5000218036-ELD-0001-AU-VWT-013 |
| ELECTRICAL SCHEMATICS | 5000218036-ELD-0001-AU-VWT-014 |
| ELECTRICAL SCHEMATICS | 5000218036-ELD-0001-AU-VWT-015 |
| ELECTRICAL SCHEMATICS | 5000218036-ELD-0001-AU-VWT-016 |
| ELECTRICAL SCHEMATICS | 5000218036-ELD-0001-AU-VWT-017 |
| ELECTRICAL SCHEMATICS | 5000218036-ELD-0001-AU-VWT-018 |
| ELECTRICAL SCHEMATICS | 5000218036-ELD-0001-AU-VWT-019 |
| ELECTRICAL SCHEMATICS | 5000218036-ELD-0001-AU-VWT-020 |
| ELECTRICAL SCHEMATICS | 5000218036-ELD-0001-AU-VWT-021 |
| | |
| FIELS DIAGRAM | 5000218036-EID-0001-AU-VWT-001 |
| FIELS DIAGRAM | 5000218036-EID-0001-AU-VWT-002 |
| FIELS DIAGRAM | 5000218036-EID-0001-AU-VWT-003 |
| FIELS DIAGRAM | 5000218036-EID-0001-AU-VWT-004 |
| FIELS DIAGRAM | 5000218036-EID-0001-AU-VWT-005 |
| FIELS DIAGRAM | 5000218036-EID-0001-AU-VWT-006 |
| FIELS DIAGRAM | 5000218036-EID-0001-AU-VWT-007 |
| FIELS DIAGRAM | 5000218036-EID-0001-AU-VWT-008 |
| FIELS DIAGRAM | 5000218036-EID-0001-AU-VWT-009 |
| FIELS DIAGRAM | 5000218036-EID-0001-AU-VWT-010 |
| FIELS DIAGRAM | 5000218036-EID-0001-AU-VWT-011 |
| FIELS DIAGRAM | 5000218036-EID-0001-AU-VWT-012 |
| FIELS DIAGRAM | 5000218036-EID-0001-AU-VWT-013 |
| FIELS DIAGRAM | 5000218036-EID-0001-AU-VWT-014 |
| FIELS DIAGRAM | 5000218036-EID-0001-AU-VWT-015 |
| FIELS DIAGRAM | 5000218036-EID-0001-AU-VWT-016 |
| FIELS DIAGRAM | 5000218036-EID-0001-AU-VWT-017 |

## LEGEND

- LOW PRESSURE
- HIGH PRESSURE
- LOW LEVEL
- HIGH LEVEL
- LIMIT SWITCH
- LIMIT SWITCH
- LOW FLOW
- HIGH FLOW
- RELAY CONTACT
- RELAY CONTACT
- RELAY CONTACT
- ON DELAY TIMER
- OFF DELAY TIMER
- GROUND
- ISOLATED GROUND
- FUSE (POWER)
- FUSE (CONTROL)
- DISTRIBUTION BLOCK
- MAINTAINED TWO SELECTOR SWITCH
- MAINTAINED 3 POSITIONS SELECTOR SWITCH
- SPRING RETURN FROM LEFT 3 POSITIONS SELECTOR SWITCH
- SPRING RETURN FROM RIGHT 3 POSITIONS SELECTOR SWITCH
- SPRING RETURN FROM BOTH 3 POSITIONS SELECTOR SWITCH
- PUSH BUTTON
- PUSH BUTTON
- PULL BUTTON
- PULL BUTTON
- EMERGENCY STOP BUTTON
- POTENTIOMETER
- CURRENT TRANSFORMER
- THERMOSTAT
- THERMOSTAT
- 1 POLE CIRCUIT BREAKER
- COOLING FAN
- RECEPTACLE 120VAC WITH RJ45
- RECEPTACLE 120VAC DUPLEX
- PILOT LIGHT
- PUSH TO TEST PILOT LIGHT
- RELAY COIL
- RELAY COIL WITH SURGE SUPPRESSOR
- CONTACTOR COIL
- CONTACTOR COIL WITH SURGE SUPPRESSOR
- ALARM
- RESISTOR
- SOLENOID
- PULL CORD
- ZERO SPEED DETECTOR
- POWER BLOCK FOR FIELD WIRING
- TERMINAL
- WIRING JUNCTION
- KNIFE TERMINAL
- 3 POLES THERMAL MAGNETIC CIRCUIT BREAKER
- 3 POLES MAGNETIC CIRCUIT BREAKER
- 3 POLES FUSIBLE DISCONNECT SWITCH
- 3 POLES DISCONNECT SWITCH
- 3 POLES CONTACTOR
- 3 POLES OVERLOAD RELAY

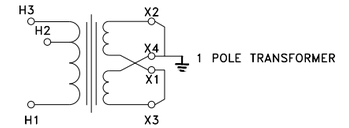


| WIRE COLOR CODE | |
|---|---|
| MINIMAL 16AWG GAUGE, XLPE WIRE TYPE. | |
| | |
| POWER 120VAC | BLACK |
| CONTROL 120VAC | RED |
| NEUTRAL | WHITE |
| 24VDC | BLUE |
| 0VDC | BLUE/WHITE |
| DRY CONTRACT | YELLOW, 14AWG |
| NON-ISOLATED GROUND | GREEN |
| ISOLATED GROUND | GREEN/YELLOW |
| TWISTED PAIR | (+) BLACK & (-) WHITE |

WIRE NUMBER

XX XX XX
- LINE NUMBER
- PAGE NUMBER
- PANEL NUMBER

| REV | DESCRIPTION | DATE | REVD | CHKD | APVD | ECN |
|---|---|---|---|---|---|---|
| 5 | AS BUILT \|\| FIELD MODIFICATION | 2020-02-28 | SB | RA | – | – |
| 4 | AS BUILT \|\| FIELD MODIFICATION | 2019-07-29 | JC | RA | – | – |
| 3 | AS BUILT | 2019-03-27 | HZ | RA | – | – |
| 2 | FOR FABRICATION | 2019-03-19 | HZ | RA | – | – |
| 1 | FOR APPROVAL | 2019-01-03 | RA | HZ | – | – |


**CONFIDENTIALITY AND INTELLECTUAL PROPERTY NOTICE**

ALL INFORMATION CONTAINED IN THIS DOCUMENT IS THE SOLE PROPERTY OF VEOLIA WATER TECHNOLOGIES CANADA INC. AND IS PROTECTED BY ALL APPLICABLE LAWS, INCLUDING BUT NOT LIMITED TO COPYRIGHT AND OTHER INTELLECTUAL PROPERTY LAWS. THE DESIGN CONCEPTS AND INFORMATION CONTAINED HEREIN ARE PROPRIETARY TO V.W.T AND ARE SUBMITTED IN CONFIDENCE. THEY ARE NOT TRANSFERABLE. THEY MUST BE USED ONLY FOR THE PURPOSE FOR WHICH THE DOCUMENT IS EXPRESSLY SUBMITTED AND NO IMPLICIT LICENCE IS GRANTED OTHERWISE BY THE SUBMISSION OF THIS DOCUMENT. THEY ARE CONFIDENTIAL AND PRIVILEGED INFORMATION OF V.W.T. AND THEY MUST NOT BE DISCLOSED, REPRODUCED, LOANED, REMITTED OR USED IN ANY OTHER MANNER WITHOUT THE EXPRESS WRITTEN CONSENT OF V.W.T. V.W.T. ASSUMES NO RESPONSIBILITY OR LIABILITY FOR THE USE OF THIS DOCUMENT OR THE DESIGN CONCEPTS AND INFORMATION CONTAINED HEREIN FOR ANOTHER PROJECT, OR IN A MANNER THAT DOES NOT RELATE TO THE FITNESS OR PURPOSE OF THIS DOCUMENT. IN NO EVENT SHALL THIS DOCUMENT OR THE DESIGN CONCEPTS AND INFORMATION CONTAINED HEREIN BE USED IN A MANNER DETRIMENTAL TO THE INTEREST OF V.W.T. ALL COPYRIGHT, PATENT AND OTHER INTELLECTUAL PROPERTY RIGHTS ARE RESERVED. ACCEPTANCE OF THE DELIVERY OF THIS DOCUMENT CONSTITUTES AGREEMENT TO THESE TERMS AND CONDITIONS.


| | | |
|---|---|---|
| DESIGNER | – | DATE – |
| CHECKER | – | DATE – |
| ENGINEER | – | DATE – |
| SCALE: | N/A | |

TITLE
CONTROL PANEL LCP-02-300
LEGEND & DRAWING LIST

CLIENT
WWTP UPGRADE
CITY OF IQALUIT

VEOLIA
VEOLIA WATER TECHNOLOGIES CANADA INC. 4105 Sartelon, Saint-Laurent, Qc, Canada. Tel: (514) 334-7230

| PROJECT DRAWING | INTERNAL | SHEET | REV |
|---|---|---|---|
| 5000218036-EPL – 0001-AU-VWT | – | 02 OF 06 | 5 |

BAR = 1" AT PLOT SCALE
REF: A6798A
STD: "B" 11x17

Mar 09, 2020 15:31:46 – G:\Projets A67XX\A6798A @ A6798D – VEOLIA – Upgrade\DOC\DESSIN\000-DRAWINGS\LCP-02-300\REV 5\5000218036-EPL-0001-AU-VWT-002.dwg – sbouya

5000218036 Iqaluit WWTP

ENCLOSURE NEMA 4X–SS304 / 72H'' X 36W'' X 16D''
CSA APPROVAL

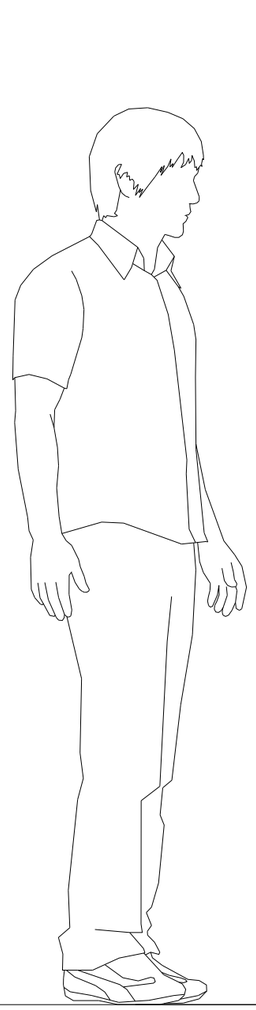

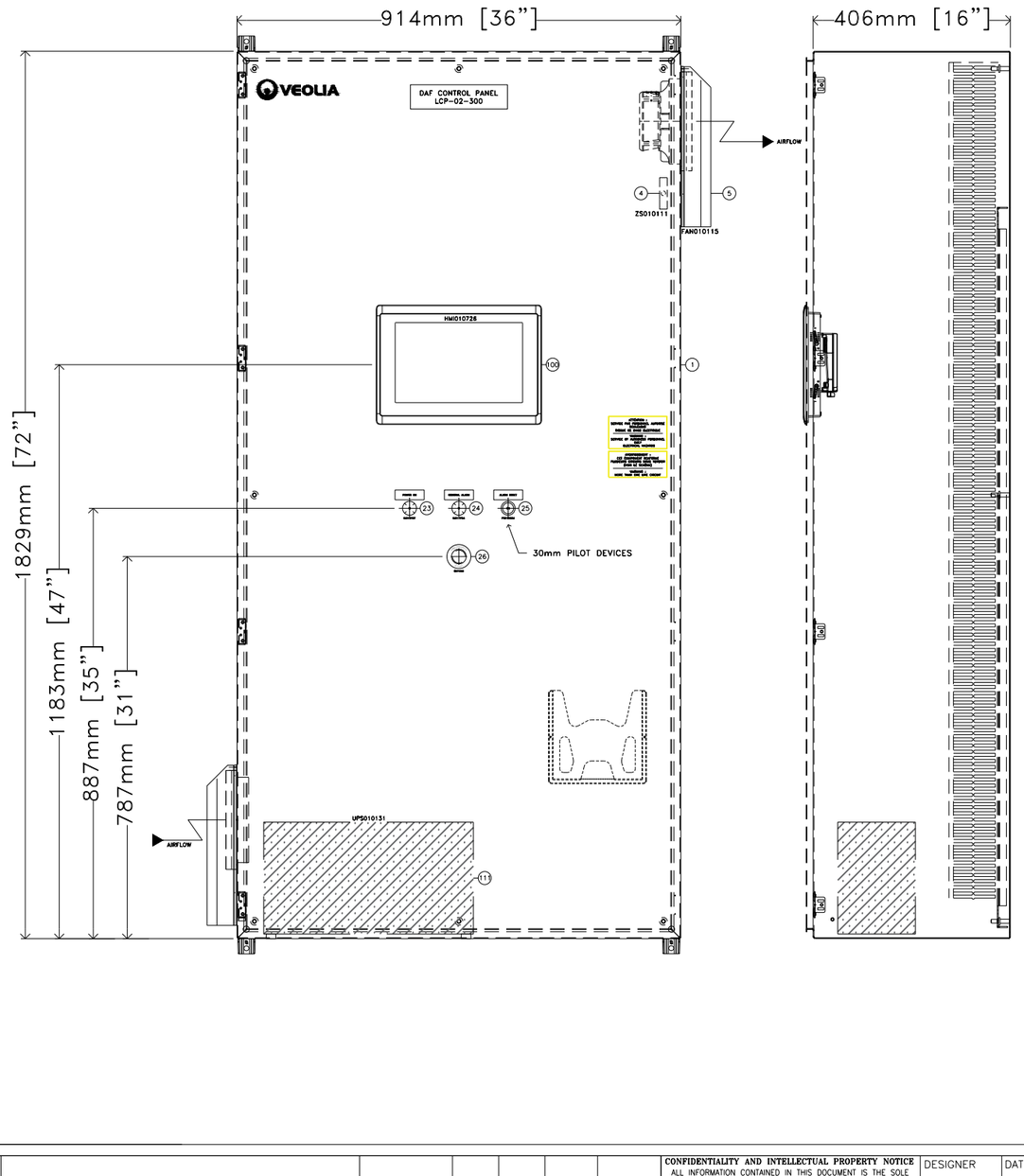


NAME–PLATES DETAILS :

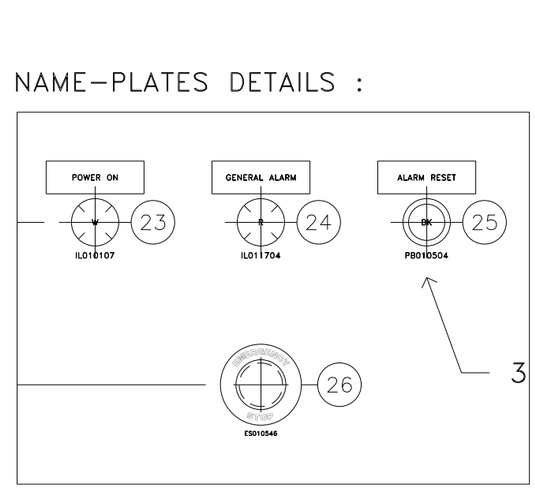


| REV | DESCRIPTION | DATE | REVD | CHKD | APVD | ECN |
|---|---|---|---|---|---|---|
| 5 | AS BUILT \|\| FIELD MODIFICATION | 2020–02–28 | SB | RA | – | – |
| 4 | AS BUILT \|\| FIELD MODIFICATION | 2019–07–29 | JC | RA | – | – |
| 3 | AS BUILT | 2019–03–27 | HZ | RA | – | – |
| 2 | FOR FABRICATION | 2019–03–19 | HZ | RA | – | – |
| 1 | FOR APPROVAL | 2019–01–03 | RA | HZ | – | – |


**CONFIDENTIALITY AND INTELLECTUAL PROPERTY NOTICE**
ALL INFORMATION CONTAINED IN THIS DOCUMENT IS THE SOLE PROPERTY OF VEOLIA WATER TECHNOLOGIES CANADA INC. AND IS PROTECTED BY ALL APPLICABLE LAWS, INCLUDING BUT NOT LIMITED TO COPYRIGHT AND OTHER INTELLECTUAL PROPERTY LAWS. THE DESIGN CONCEPTS AND INFORMATION CONTAINED HEREIN ARE PROPRIETARY TO V.W.T AND ARE SUBMITTED IN CONFIDENCE. THEY ARE NOT TRANSFERABLE. THEY MUST BE USED ONLY FOR THE PURPOSE FOR WHICH THE DOCUMENT IS EXPRESSLY SUBMITTED AND NO IMPLICIT LICENCE IS GRANTED OTHERWISE BY THE SUBMISSION OF THIS DOCUMENT. THEY ARE CONFIDENTIAL AND PRIVILEGED INFORMATION OF V.W.T. AND THEY MUST NOT BE DISCLOSED, REPRODUCED, LOANED, REMITTED OR USED IN ANY OTHER MANNER WITHOUT THE EXPRESS WRITTEN CONSENT OF V.W.T. V.W.T. ASSUMES NO RESPONSIBILITY OR LIABILITY FOR THE USE OF THIS DOCUMENT OR THE DESIGN CONCEPTS AND INFORMATION CONTAINED HEREIN FOR ANOTHER PROJECT, OR IN A MANNER THAT DOES NOT RELATE TO THE FITNESS OR PURPOSE OF THIS DOCUMENT. IN NO EVENT SHALL THIS DOCUMENT OR THE DESIGN CONCEPTS AND INFORMATION CONTAINED HEREIN BE USED IN A MANNER DETRIMENTAL TO THE INTEREST OF V.W.T. ALL COPYRIGHT, PATENT AND OTHER INTELLECTUAL PROPERTY RIGHTS ARE RESERVED. ACCEPTANCE OF THE DELIVERY OF THIS DOCUMENT CONSTITUTES AGREEMENT TO THESE TERMS AND CONDITIONS.


| | |
|---|---|
| DESIGNER | DATE |
| – | – |
| CHECKER | DATE |
| – | – |
| ENGINEER | DATE |
| – | – |
| SCALE: | N/A |

TITLE
CONTROL PANEL LCP–02–300
INTERNAL LAYOUT

CLIENT
WWTP UPGRADE
CITY OF IQALUIT

VEOLIA
VEOLIA WATER TECHNOLOGIES CANADA INC. 4105 Sartelon, Saint-Laurent, Qc, Canada. Tel: (514) 334-7230

| PROJECT | DRAWING | INTERNAL | SHEET | REV |
|---|---|---|---|---|
| 5000218036–EPL | 0001–AU–VWT | – | 03 OF 06 | 5 |

BAR = 1" AT PLOT SCALE
REF: A6798A
STD: "B" 11x17

Mar 09, 2020 15:31:49 – G:\Projets A67XX\A6798A @ A6798D – VEOLIA – 5000218036 Iqaluit WWTP Upgrade\DOC\DESSIN\000–DRAWINGS\LCP–02–300\REV 5\5000218036–EPL–0001–AU–VWT–003.dwg – sbouya

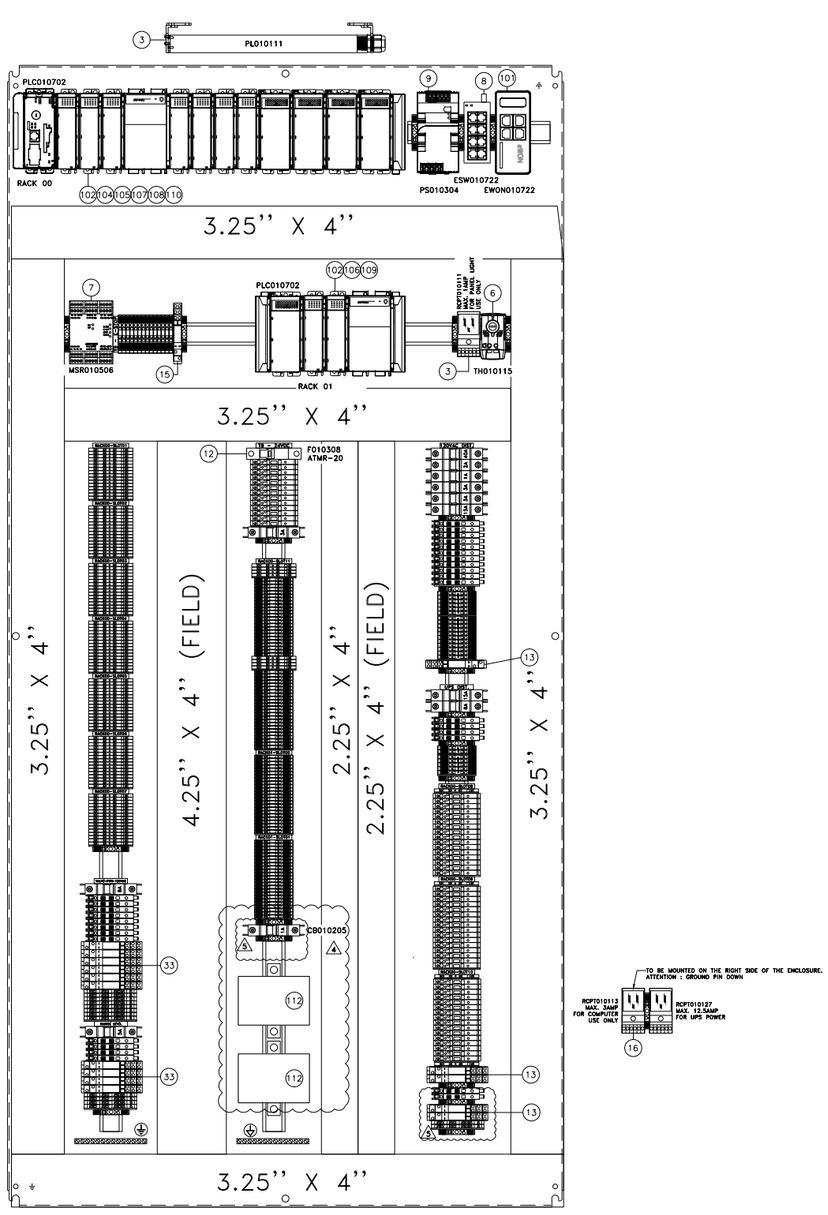


| REV | DESCRIPTION | DATE | REVD | CHKD | APVD | ECN |
|---|---|---|---|---|---|---|
| 5 | AS BUILT \|\| FIELD MODIFICATION | 2020-02-28 | SB | RA | – | – |
| 4 | AS BUILT \|\| FIELD MODIFICATION | 2019-07-29 | JC | RA | – | – |
| 3 | AS BUILT | 2019-03-27 | HZ | RA | – | – |
| 2 | FOR FABRICATION | 2019-03-19 | HZ | RA | – | – |
| 1 | FOR APPROVAL | 2019-01-03 | RA | HZ | – | – |

**CONFIDENTIALITY AND INTELLECTUAL PROPERTY NOTICE**
ALL INFORMATION CONTAINED IN THIS DOCUMENT IS THE SOLE PROPERTY OF VEOLIA WATER TECHNOLOGIES CANADA INC. AND IS PROTECTED BY ALL APPLICABLE LAWS, INCLUDING BUT NOT LIMITED TO COPYRIGHT AND OTHER INTELLECTUAL PROPERTY LAWS. THE DESIGN CONCEPTS AND INFORMATION CONTAINED HEREIN ARE PROPRIETARY TO V.W.T AND ARE SUBMITTED IN CONFIDENCE. THEY ARE NOT TRANSFERABLE. THEY MUST BE USED ONLY FOR THE PURPOSE FOR WHICH THE DOCUMENT IS EXPRESSLY SUBMITTED AND NO IMPLICIT LICENCE IS GRANTED OTHERWISE BY THE SUBMISSION OF THIS DOCUMENT. THEY ARE CONFIDENTIAL AND PRIVILEGED INFORMATION OF V.W.T. AND THEY MUST NOT BE DISCLOSED, REPRODUCED, LOANED, REMITTED OR USED IN ANY OTHER MANNER WITHOUT THE EXPRESS WRITTEN CONSENT OF V.W.T. V.W.T. ASSUMES NO RESPONSIBILITY OR LIABILITY FOR THE USE OF THIS DOCUMENT OR THE DESIGN CONCEPTS AND INFORMATION CONTAINED HEREIN FOR ANOTHER PROJECT, OR IN A MANNER THAT DOES NOT RELATE TO THE FITNESS OR PURPOSE OF THIS DOCUMENT. IN NO EVENT SHALL THIS DOCUMENT OR THE DESIGN CONCEPTS AND INFORMATION CONTAINED HEREIN BE USED IN A MANNER DETRIMENTAL TO THE INTEREST OF V.W.T. ALL COPYRIGHT, PATENT AND OTHER INTELLECTUAL PROPERTY RIGHTS ARE RESERVED. ACCEPTANCE OF THE DELIVERY OF THIS DOCUMENT CONSTITUTES AGREEMENT TO THESE TERMS AND CONDITIONS.

| | |
|---|---|
| DESIGNER | DATE – |
| CHECKER | DATE – |
| ENGINEER | DATE – |
| SCALE: | N/A |

TITLE
CONTROL PANEL LCP-02-300
INTERNAL LAYOUT

CLIENT
WWTP UPGRADE
CITY OF IQALUIT

VEOLIA
VEOLIA WATER TECHNOLOGIES CANADA INC. 4105 Sartelon, Saint-Laurent, Qc, Canada. Tel: (514) 334-7230

| PROJECT | DRAWING | INTERNAL | SHEET | REV |
|---|---|---|---|---|
| 5000218036-EPL – | 0001-AU-VWT | – | 04 OF 06 | 5 |

BAR = 1" AT PLOT SCALE
REF: A6798A
STD: "B" 11x17
Mar 09, 2020 15:31:53 – G:\Projets A67XX\A6798A @ A6798D – VEOLIA – 5000218036 Iqaluit WWTP Upgrade\DOC\DESSIN\000 DRAWINGS\LCP 02 300\REV 5\5000218036 EPL 0001 AU VWT 004.dwg – sbouyo

BAR = 1" AT PLOT SCALE
REF: A6798A
STD: "B" 11x17

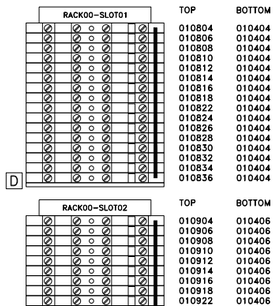


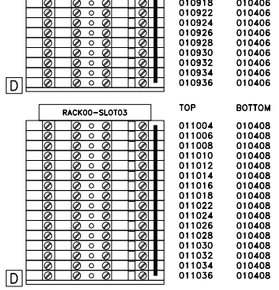





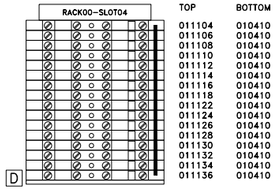


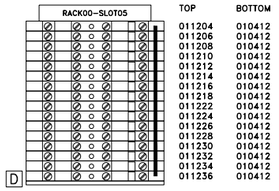


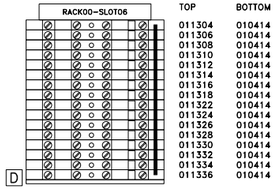


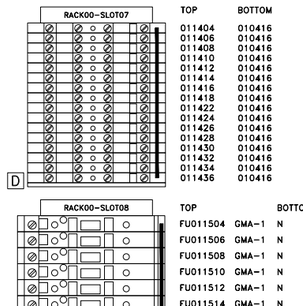


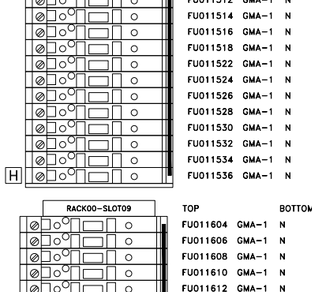


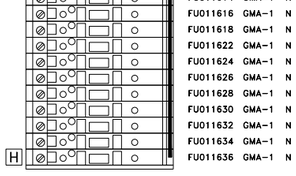


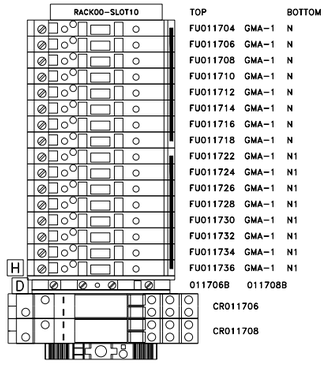


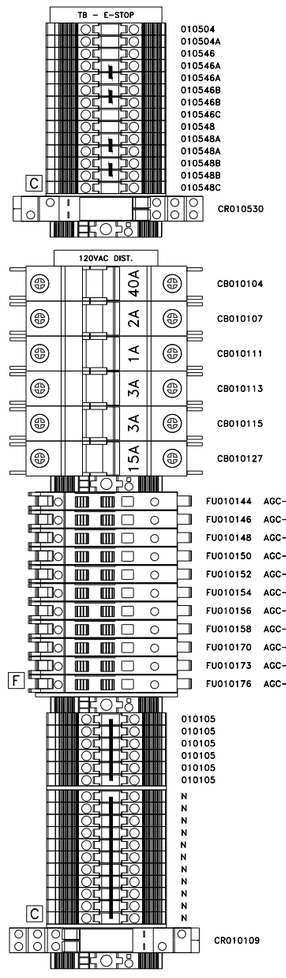


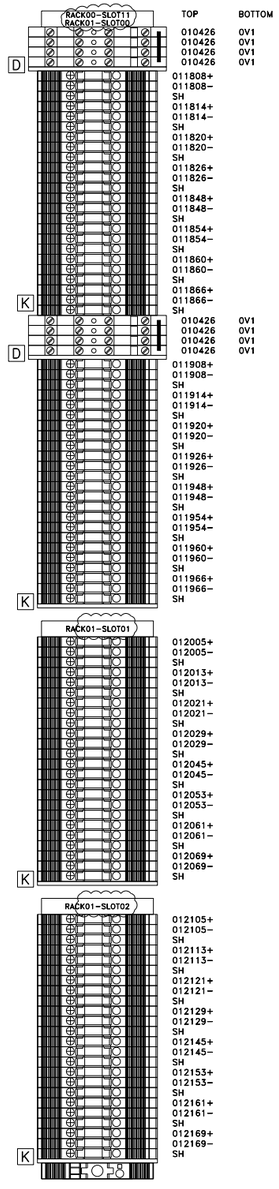


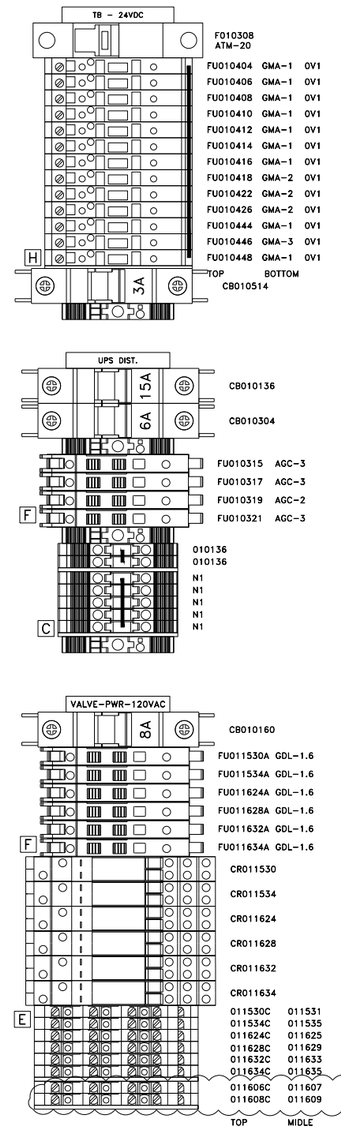


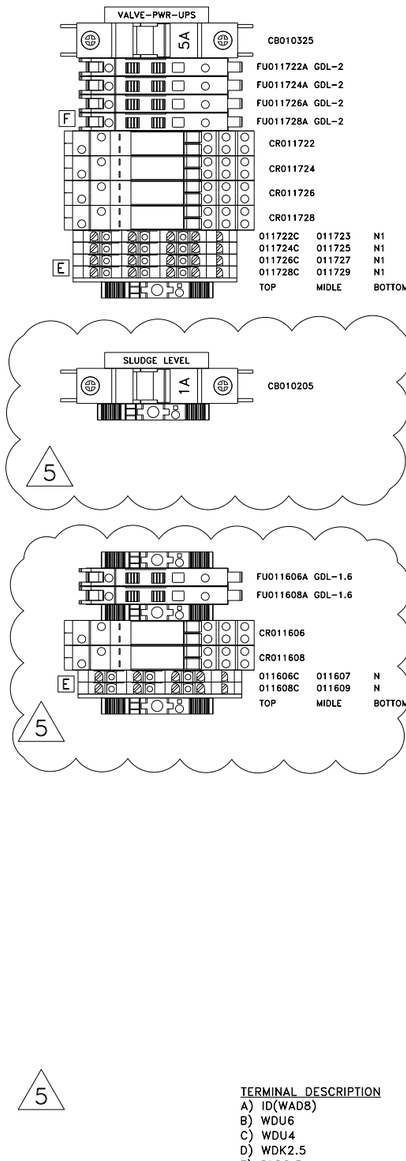


TERMINAL DESCRIPTION
A) ID(WAD8)
B) WDU6
C) WDU4
D) WDK2.5
E) DLD2.5
F) FUSE WSI 4/2
G) FUSE WSI 4
H) FUSE KDKS 1/EN4
J) WTR 2.5
K) WDU 2.5

| REV | DESCRIPTION | DATE | REVD | CHKD | APVD | ECN |
|---|---|---|---|---|---|---|
| 5 | AS BUILT \|\| FIELD MODIFICATION | 2020-02-28 | SB | RA | – | – |
| 4 | AS BUILT \|\| FIELD MODIFICATION | 2019-07-29 | JC | RA | – | – |
| 3 | AS BUILT | 2019-03-27 | HZ | RA | – | – |
| 2 | FOR FABRICATION | 2019-03-19 | HZ | RA | – | – |
| 1 | FOR APPROVAL | 2019-01-03 | RA | HZ | – | – |

CONFIDENTIALITY AND INTELLECTUAL PROPERTY NOTICE
ALL INFORMATION CONTAINED IN THIS DOCUMENT IS THE SOLE PROPERTY OF VEOLIA WATER TECHNOLOGIES CANADA INC. AND IS PROTCTED BY ALL APPLICABLE LAWS, INCLUDING BUT NOT LIMITED TO COPYRIGHT AND OTHER INTELLECTUAL PROPERTY LAWS. THE DESIGN CONCEPTS AND INFORMATION CONTAINED HEREIN ARE PROPRIETARY TO V.W.T AND ARE SUBMITTED IN CONFIDENCE. THEY ARE NOT TRANSFERABLE. THEY MUST BE USED ONLY FOR THE PURPOSE FOR WHICH THE DOCUMENT IS EXPRESSLY SUBMITTED AND NO IMPLICIT LICENCE IS GRANTED OTHERWISE BY THE SUBMISSION OF THIS DOCUMENT. THEY ARE CONFIDENTIAL AND PRIVILEGED INFORMATION OF V.W.T. AND THEY MUST NOT BE DISCLOSED, REPRODUCED, LOANED, REMITTED OR USED IN ANY OTHER MANNER WITHOUT THE EXPRESS WRITTEN CONSENT OF V.W.T. V.W.T. ASSUMES NO RESPONSIBILITY OR LIABILITY FOR THE USE OF THIS DOCUMENT OR THE DESIGN CONCEPTS AND INFORMATION CONTAINED HEREIN FOR ANOTHER PROJECT, OR IN A MANNER THAT DOES NOT RELATE TO THE FITNESS OR PURPOSE OF THIS DOCUMENT. IN NO EVENT SHALL THIS DOCUMENT OR THE DESIGN CONCEPTS AND INFORMATION CONTAINED HEREIN BE USED IN A MANNER DETRIMENTAL TO THE INTEREST OF V.W.T. ALL COPYRIGHT, PATENT AND OTHER INTELLECTUAL PROPERTY RIGHTS ARE RESERVED. ACCEPTANCE OF THE DELIVERY OF THIS DOCUMENT CONSTITUTES AGREEMENT TO THESE TERMS AND CONDITIONS.

| | |
|---|---|
| DESIGNER | DATE – |
| CHECKER | DATE – |
| ENGINEER | DATE – |
| SCALE: | N/A |

TITLE
CONTROL PANEL LCP-02-300
TERMINAL LAYOUT

CLIENT
WWTP UPGRADE
CITY OF IQALUIT

VEOLIA
VEOLIA WATER TECHNOLOGIES CANADA INC. 4105 Sartelon, Saint-Laurent, Qc, Canada. Tel: (514) 334-7230

| PROJECT | DRAWING | INTERNAL | SHEET | REV |
|---|---|---|---|---|
| 5000218036-EPL | 0001-AU-VWT | – | 05 OF 06 | 5 |

Mar 09, 2020 15:31:56 - G:\Projets A67XX\A6798A @ A6798D - VEOLIA - 5000218036-EPL-0001-AU-VWT-005.dwg - sbouya
Upgrade\DOC\DESSIN\000-DRAWINGS\LCP-02-300\REV 5\5000218036-EPL-0001-AU-VWT-005.dwg - sbouya

| ITEM | DESCRIPTION | PART NUMBER | MANUF. | QTY | BY |
|---|---|---|---|---|---|
| 1 | NEMA 4X ENCLOSURE, SS304, DIM 72"H x 36"W x 16"D<br>C/W CP7236, CMFKSS | CSD723616SSR | HOFFMAN | 1 | ENV |
| 2 | DATA POCKET 6"H x 6"W x 0.75"D | – | – | 1 | ENV |
| 3 | LED LIGHT 23 IN, 120V 10W<br>C/W CABLE LS2-PC6 + SIMPLE OUTLET 120VAC 2963860 PHOENIX | LS2-239-4 | PREMISE | 1 | ENV |
| 4 | DOOR SWITCH 1NO | FLKDS | HAMMOND | 1 | ENV |
| 5 | COOLING FILTER FAN NEMA12 120VAC<br>C/W OUTLET FILTER RITTAL 3239.200 + 3239.080 (2X) | 3239.110 | RITTAL | 1 | ENV |
| 6 | COOLING THERMOSTAT 0@60DEG C, 1NO CONTACT | FGT-200 | DBK | 1 | ENV |
| 7 | SAFETY RELAY<br>24VDC | 440R-G23216 | ALLEN-BRADLEY | 1 | ENV |
| 8 | UNMANAGED ETHERNET SWITCH, 8 PORT | IES-180B | WEIDMULLER | 1 | ENV |
| 9 | POWER SUPPLY 24VDC, 480W, 20AMP | 1606XLS480EC | ALLEN-BRADLEY | 1 | ENV |
| 10 | GND LUG, COPPER | CB3536CY | PANDUIT | 1 | ENV |
| 11 | GND BAR, COPPER | 4C-190 | NSI | 1 | ENV |
| 12 | FUSE HOLDER 1 POLE TYPE CC<br>C/W FUSE, ATMR-20(1X) | USCC1 | MERSEN | 1 | ENV |
| 13 | 2 POLES RELAY, 120VAC COIL<br>C/W BASE 700-HN222 | 700-HK32A1 | ALLEN-BRADLEY | A/R | ENV |
| 14 | BREAKER 1P, 277VCA, CURVE C, XA<br>ACCORDING TO THE TERMINAL LAYOUT PAGE | M9FXXXX | SCHNEIDER | A/R | ENV |
| 15 | RELAY 2PDT COIL 24VDC<br>C/W BASE 700-HN222 | 700-HK32Z24 | ALLEN-BRADLEY | A/R | ENV |
| 16 | SIMPLE OUTLET, 120VAC | 2963860 | PHOENIX CONTACT | 2 | ENV |
| 17 | TERMINAL 2 LEVEL WDK 2.5<br>C/W END PLATE 1059100000 | 1021500000 | WEIDMULLER | LOT | ENV |
| 18 | TERMINAL 3 LEVEL DLD 2.5<br>C/W END PLATE 1784210000 | 1784180000 | WEIDMULLER | LOT | ENV |
| 19 | TERMINAL 600VAC/DC, 20A WDU 2.5<br>C/W END PLATE 1050000000 | 1020000000 | WEIDMULLER | LOT | ENV |
| 20 | KNIFE TERMINAL 300VAC/DC, 10A, WTR 2.5<br>C/W END PLATE 1050000000 | 1855610000 | WEIDMULLER | LOT | ENV |
| 21 | TERMINAL 1 LEVEL WDU 4<br>C/W END PLATE 1050000000 | 1020100000 | WEIDMULLER | LOT | ENV |
| 22 | TERMINAL 1 LEVEL WDU 6<br>C/W SEPARATOR 1050100000 | 1020200000 | WEIDMULLER | LOT | ENV |
| 23 | WHITE PILOT LIGHT, 30mm<br>120VAC | 9001SKP38W31 | SQUARE D | 1 | ENV |
| 24 | RED PILOT LIGHT, 30mm<br>24VDC | 9001SKP35R31 | SQUARE D | 1 | ENV |
| 25 | BLACK PUSH BUTTON, 30mm<br>NEMA4X | 9001SKR1U | SQUARE D | 1 | ENV |
| 26 | RED EMERGENCY STOP PUSH BUTTON, 30mm<br>C/W CONTACT | 9001SKR16H2 | SQUARE D | 1 | ENV |
| 27 | END ANCHOR WEW 35/2 | 1061200000 | WEIDMULLER | A/R | ENV |
| 28 | FUSE HOLDER ¼ X 1¼ WSI 4/2 | 1880430000 | WEIDMULLER | A/R | ENV |
| 29 | FUSE TERMINAL<br>C/W END PLATE WEIDMULLER 9532470000 | 9532440000 | WEIDMULLER | A/R | ENV |
| 30 | FAST ACTING MINI FUSE 5X20MM 250VAC XA<br>C/W SPARE | GMA-X | BUSSMANN | A/R | ENV |
| 31 | FUSE, FAST ACTING, 1/4 x 1-1/4, XA | AGC-X | BUSSMANN | A/R | ENV |
| 32 | FUSE, FAST ACTING, 1/4 x 1-1/4, XA | GDL-X | BUSSMANN | A/R | ENV |
| 33 | RELAY SPDT 10A 120VAC<br>C/W BASE 700-HN221 | 700-HK36A1 | ALLEN-BRADLEY | 10 | ENV |

VEOLIA PARTS LIST

| ITEM | DESCRIPTION | PART NUMBER | MANUF. | QTY | BY |
|---|---|---|---|---|---|
| 100 | PanelView Plus 7 Performance Terminal, Touch Screen, 12 WXGA<br>24VDC | 2711P-T12W22D9P | ALLEN-BRADLEY | 1 | VEO |
| 101 | MODEM, 24VDC<br>C/W ANTENNA EW40205, FLB3205-00/5 + SIM CARD | E-WON | FLEXY20500-00 | 1 | VEO |
| 102 | PLC POWER SUPPLY<br>120VAC, 200VA | 1769-PA4 | ALLEN-BRADLEY | 2 | VEO |
| 103 | | | | | VEO |
| 104 | INPUT CARD, 16 PTS, 24VDC | 1769-IQ16 | ALLEN-BRADLEY | 7 | VEO |
| 105 | OUTPUT CARD, 16 PTS | 1769-OW16 | ALLEN-BRADLEY | 3 | VEO |
| 106 | ANALOG OUTPUT CARD, 8 PTS | 1769-OF8C | ALLEN-BRADLEY | 2 | VEO |
| 107 | ANALOG INPUT CARD, 8PTS | 1756-IF8 | ALLEN-BRADLEY | 2 | VEO |
| 108 | PLC CPU | 1769-L33ER | ALLEN-BRADLEY | 1 | VEO |
| 109 | LEFT END CAP | 1769-ECL | ALLEN-BRADLEY | 1 | VEO |
| 110 | EXPANSION CABLE<br>RIGHT TO LEFT CABLE | 1769-CRR1 | ALLEN-BRADLEY | 1 | VEO |
| 111 | UPS, 1500VA, 120VAC, 1PH | 9SX1500 | EATON | 1 | VEO |
| 112 | INTRINSICALLY SAFE CONTROLS | SERIES 27 | WARRICK | 2 | VEO |

Mar 09, 2020 15:31:58 - G:\Projets A67XX\A6798A @ A6798D - VEOLIA - 5000218036 Iqaluit WWTP Upgrade\DOC\DESSIN\000-DRAWINGS\LCP-02-300\REV 5\5000218036-EPL-0001-AU-VWT-006.dwg - sbouya

BAR = 1" AT PLOT SCALE

REF: A6798A

STD: "B" 11x17

| REV | DESCRIPTION | DATE | REVD | CHKD | APVD | ECN |
|---|---|---|---|---|---|---|
| 5 | AS BUILT \|\| FIELD MODIFICATION | 2020-02-28 | SB | RA | – | – |
| 4 | AS BUILT \|\| FIELD MODIFICATION | 2019-07-29 | JC | RA | – | – |
| 3 | AS BUILT | 2019-03-27 | HZ | RA | – | – |
| 2 | FOR FABRICATION | 2019-03-19 | HZ | RA | – | – |
| 1 | FOR APPROVAL | 2019-01-03 | RA | HZ | – | – |

**CONFIDENTIALITY AND INTELLECTUAL PROPERTY NOTICE**
ALL INFORMATION CONTAINED IN THIS DOCUMENT IS THE SOLE PROPERTY OF VEOLIA WATER TECHNOLOGIES CANADA INC. AND IS PROTECTED BY ALL APPLICABLE LAWS, INCLUDING BUT NOT LIMITED TO COPYRIGHT AND OTHER INTELLECTUAL PROPERTY LAWS.. THE DESIGN CONCEPTS AND INFORMATION CONTAINED HEREIN ARE PROPRIETARY TO V.W.T AND ARE SUBMITTED IN CONFIDENCE. THEY ARE NOT TRANSFERABLE. THEY MUST BE USED ONLY FOR THE PURPOSE FOR WHICH THE DOCUMENT IS EXPRESSLY SUBMITTED AND NO IMPLICIT LICENCE IS GRANTED OTHERWISE BY THE SUBMISSION OF THIS DOCUMENT. THEY ARE CONFIDENTIAL AND PRIVILEGED INFORMATION OF V.W.T. AND THEY MUST NOT BE DISCLOSED, REPRODUCED, LOANED, REMITTED OR USED IN ANY OTHER MANNER WITHOUT THE EXPRESS WRITTEN CONSENT OF V.W.T. V.W.T. ASSUMES NO RESPONSIBILITY OR LIABILITY FOR THE USE OF THIS DOCUMENT OR THE DESIGN CONCEPTS AND INFORMATION CONTAINED HEREIN FOR ANOTHER PROJECT, OR IN A MANNER THAT DOES NOT RELATE TO THE FITNESS OR PURPOSE OF THIS DOCUMENT. IN NO EVENT SHALL THIS DOCUMENT OR THE DESIGN CONCEPTS AND INFORMATION CONTAINED HEREIN BE USED IN A MANNER DETRIMENTAL TO THE INTEREST OF V.W.T. ALL COPYRIGHT, PATENT AND OTHER INTELLECTUAL PROPERTY RIGHTS ARE RESERVED. ACCEPTANCE OF THE DELIVERY OF THIS DOCUMENT CONSTITUTES AGREEMENT TO THESE TERMS AND CONDITIONS.

| | |
|---|---|
| DESIGNER | DATE |
| – | – |
| CHECKER | DATE |
| – | – |
| ENGINEER | DATE |
| – | – |
| SCALE: | N/A |

TITLE
CONTROL PANEL LCP-02-300
BILL OF MATERIAL

CLIENT
WWTP UPGRADE
CITY OF IQALUIT

VEOLIA
VEOLIA WATER TECHNOLOGIES CANADA INC. 4105 Sartelon, Saint-Laurent, Qc, Canada. Tel: (514) 334-7230

| PROJECT | DRAWING | INTERNAL | SHEET | REV |
|---|---|---|---|---|
| 5000218036-EPL | 0001-AU-VWT | – | 06 OF 06 | 5 |

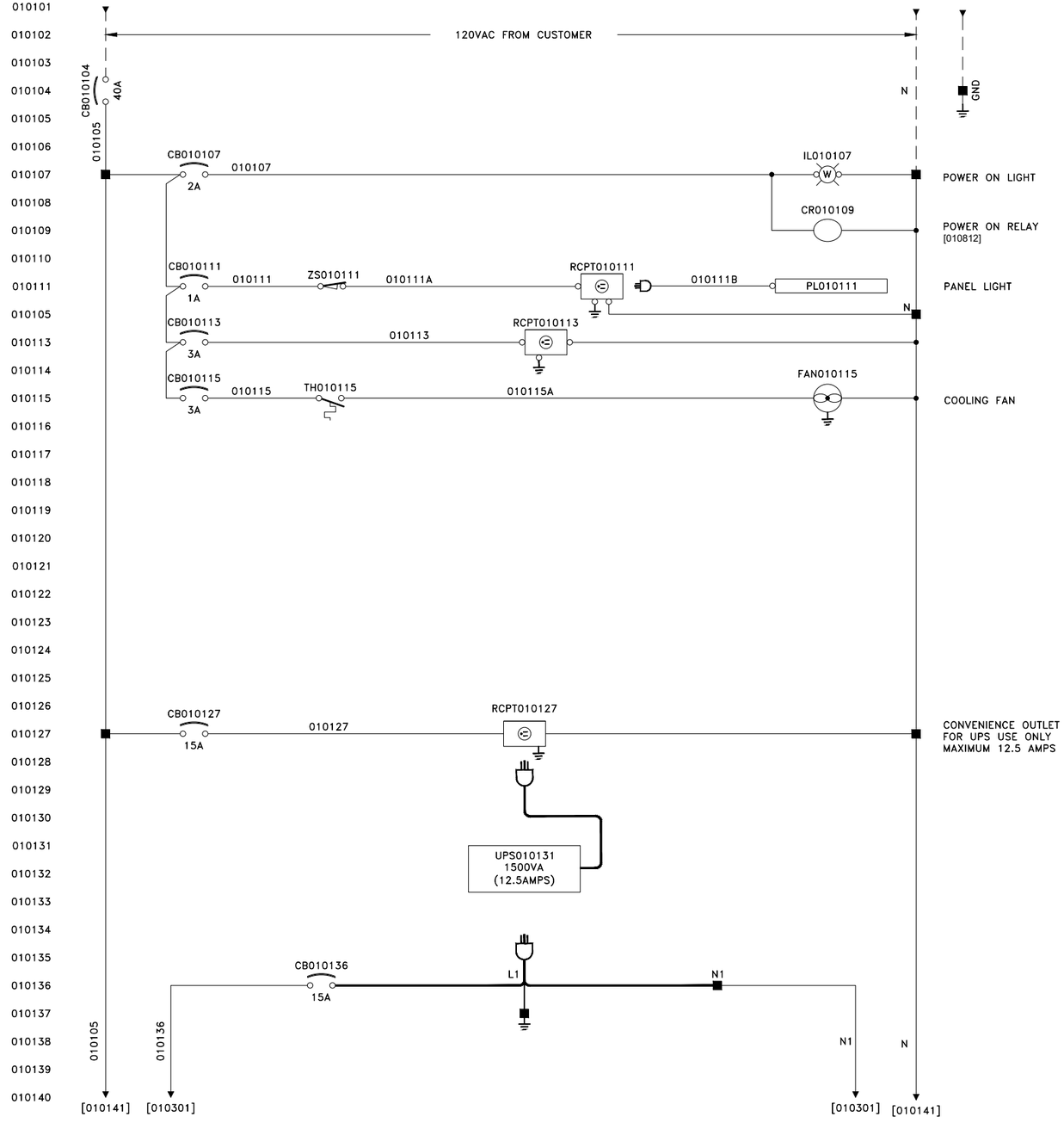


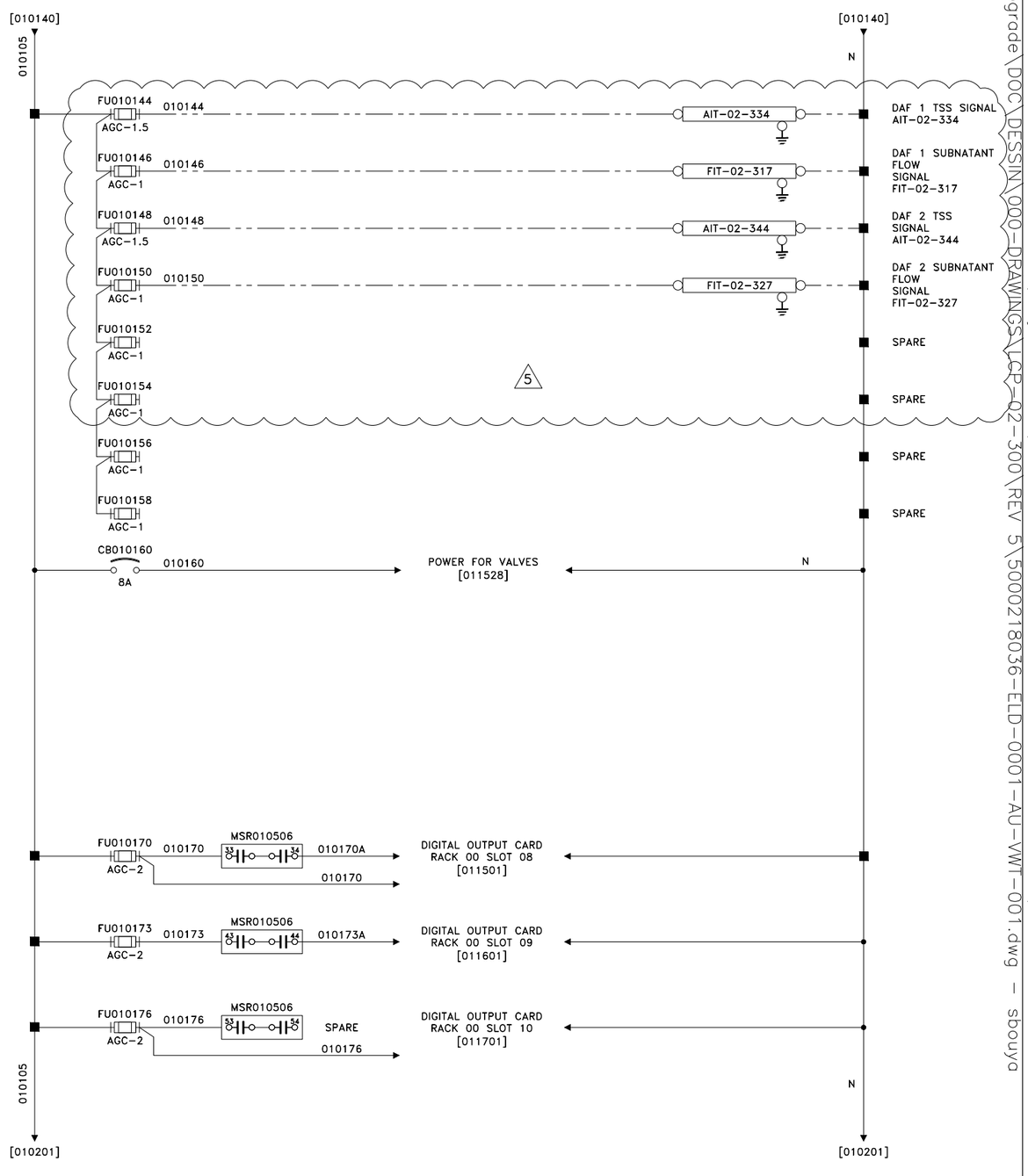


WIRING

VEOLIA

CUSTOMER

INTERNAL WIRING

| REV | DESCRIPTION | DATE | REVD | CHKD | APVD | ECN |
|---|---|---|---|---|---|---|
| 5 | AS BUILT \|\| FIELD MODIFICATION | 2020-02-28 | SB | RA | – | – |
| 4 | AS BUILT \|\| FIELD MODIFICATION | 2019-07-29 | JC | RA | – | – |
| 3 | AS BUILT | 2019-03-27 | HZ | RA | – | – |
| 2 | FOR FABRICATION | 2019-03-19 | HZ | RA | – | – |
| 1 | FOR APPROVAL | 2019-01-03 | HZ | RA | – | – |


**CONFIDENTIALITY AND INTELLECTUAL PROPERTY NOTICE**

ALL INFORMATION CONTAINED IN THIS DOCUMENT IS THE SOLE PROPERTY OF VEOLIA WATER TECHNOLOGIES CANADA INC. AND IS PROTECTED BY ALL APPLICABLE LAWS, INCLUDING BUT NOT LIMITED TO COPYRIGHT AND OTHER INTELLECTUAL PROPERTY LAWS. THE DESIGN CONCEPTS AND INFORMATION CONTAINED HEREIN ARE PROPRIETARY TO V.W.T. AND ARE SUBMITTED IN CONFIDENCE. THEY ARE NOT TRANSFERABLE. THEY MUST BE USED ONLY FOR THE PURPOSE FOR WHICH THE DOCUMENT IS EXPRESSLY SUBMITTED AND NO IMPLICIT LICENCE IS GRANTED OTHERWISE BY THE SUBMISSION OF THIS DOCUMENT. THEY ARE CONFIDENTIAL AND PRIVILEGED INFORMATION OF V.W.T. AND THEY MUST NOT BE DISCLOSED, REPRODUCED, LOANED, REMITTED OR USED IN ANY OTHER MANNER WITHOUT THE EXPRESS WRITTEN CONSENT OF V.W.T. V.W.T. ASSUMES NO RESPONSIBILITY OR LIABILITY FOR THE USE OF THIS DOCUMENT OR THE DESIGN CONCEPTS AND INFORMATION CONTAINED HEREIN FOR ANOTHER PROJECT, OR IN A MANNER THAT DOES NOT RELATE TO THE FITNESS OR PURPOSE OF THIS DOCUMENT. IN NO EVENT SHALL THIS DOCUMENT OR THE DESIGN CONCEPTS AND INFORMATION CONTAINED HEREIN BE USED IN A MANNER DETRIMENTAL TO THE INTEREST OF V.W.T. ALL COPYRIGHT, PATENT AND OTHER INTELLECTUAL PROPERTY RIGHTS ARE RESERVED. ACCEPTANCE OF THE DELIVERY OF THIS DOCUMENT CONSTITUTES AGREEMENT TO THESE TERMS AND CONDITIONS.


| | |
|---|---|
| DESIGNER | DATE |
| – | – |
| CHECKER | DATE |
| – | – |
| ENGINEER | DATE |
| – | – |
| SCALE: | N/A |

TITLE

CONTROL PANEL LCP-02-300
ELECTRICAL SCHEMATIC

CLIENT

WWTP UPGRADE
CITY OF IQALUIT

VEOLIA


VEOLIA WATER TECHNOLOGIES CANADA INC. 4105 Sartelon, Saint-Laurent, Qc, Canada. Tel: (514) 334-7230


| PROJECT | DRAWING | INTERNAL | SHEET | REV |
|---|---|---|---|---|
| 5000218036-ELD | 0001-AU-VWT | – | 01 OF 21 | 5 |

BAR = 1" AT PLOT SCALE

REF: A6798A

STD: "B" 11x17


Mar 09, 2020 15:31:59 – G:\Projets A67XX\A6798A @ A6798D – VEOLIA – 5000218036 Iqaluit WWTP Upgrade\DOC\DESSIN_000–DRAWINGS\LCP–02–300\REV 5\5000218036–ELD–0001–AU–VWT–001.dwg – sbouya

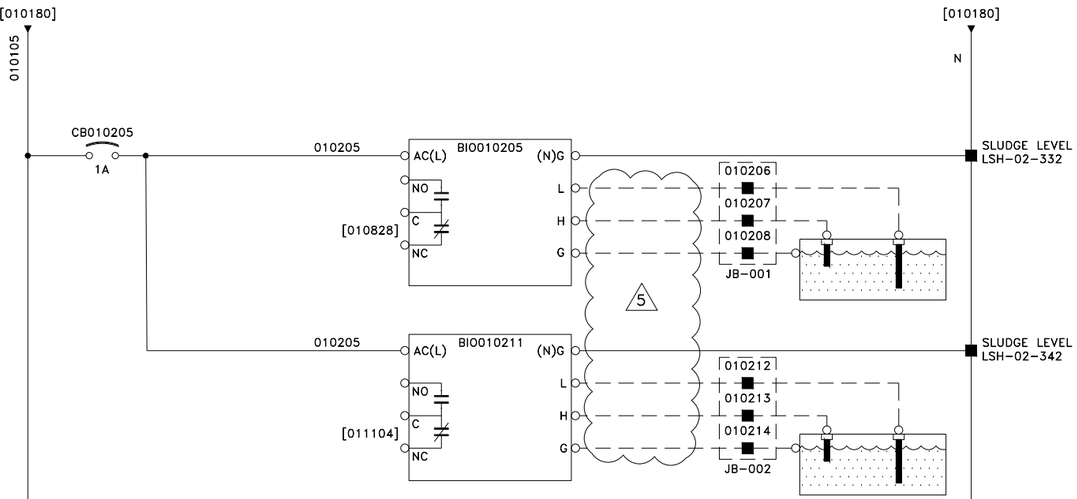





| REV | DESCRIPTION | DATE | REVD | CHKD | APVD | ECN |
|---|---|---|---|---|---|---|
| 5 | AS BUILT \|\| FIELD MODIFICATION | 2020-02-28 | SB | RA | – | – |
| 4 | AS BUILT \|\| FIELD MODIFICATION | 2019-07-29 | JC | RA | – | – |
| 3 | AS BUILT | 2019-03-27 | HZ | RA | – | – |
| 2 | FOR FABRICATION | 2019-03-19 | HZ | RA | – | – |
| 1 | FOR APPROVAL | 2019-01-03 | HZ | RA | – | – |

**CONFIDENTIALITY AND INTELLECTUAL PROPERTY NOTICE**
ALL INFORMATION CONTAINED IN THIS DOCUMENT IS THE SOLE PROPERTY OF VEOLIA WATER TECHNOLOGIES CANADA INC. AND IS PROTECTED BY ALL APPLICABLE LAWS, INCLUDING BUT NOT LIMITED TO COPYRIGHT AND OTHER INTELLECTUAL PROPERTY LAWS. THE DESIGN CONCEPTS AND INFORMATION CONTAINED HEREIN ARE PROPRIETARY TO V.W.T AND ARE SUBMITTED IN CONFIDENCE. THEY ARE NOT TRANSFERABLE. THEY MUST BE USED ONLY FOR THE PURPOSE FOR WHICH THE DOCUMENT IS EXPRESSLY SUBMITTED AND NO IMPLICIT LICENCE IS GRANTED OTHERWISE BY THE SUBMISSION OF THIS DOCUMENT. THEY ARE CONFIDENTIAL AND PRIVILEGED INFORMATION OF V.W.T. AND THEY MUST NOT BE DISCLOSED, REPRODUCED, LOANED, REMITTED OR USED IN ANY OTHER MANNER WITHOUT THE EXPRESS WRITTEN CONSENT OF V.W.T. V.W.T. ASSUMES NO RESPONSIBILITY OR LIABILITY FOR THE USE OF THIS DOCUMENT OR THE DESIGN CONCEPTS AND INFORMATION CONTAINED HEREIN FOR ANOTHER PROJECT, OR IN A MANNER THAT DOES NOT RELATE TO THE FITNESS OR PURPOSE OF THIS DOCUMENT. IN NO EVENT SHALL THIS DOCUMENT OR THE DESIGN CONCEPTS AND INFORMATION CONTAINED HEREIN BE USED IN A MANNER DETRIMENTAL TO THE INTEREST OF V.W.T. ALL COPYRIGHT, PATENT AND OTHER INTELLECTUAL PROPERTY RIGHTS ARE RESERVED. ACCEPTANCE OF THE DELIVERY OF THIS DOCUMENT CONSTITUTES AGREEMENT TO THESE TERMS AND CONDITIONS.

| | |
|---|---|
| DESIGNER | DATE – |
| CHECKER | DATE – |
| ENGINEER | DATE – |
| SCALE: | N/A |

TITLE
CONTROL PANEL LCP-02-300
ELECTRICAL SCHEMATIC

CLIENT
WWTP UPGRADE
CITY OF IQALUIT

VEOLIA
VEOLIA WATER TECHNOLOGIES CANADA INC. 4105 Sartelon, Saint-Laurent, Qc, Canada. Tel: (514) 334-7230

| PROJECT | DRAWING | INTERNAL | SHEET | REV |
|---|---|---|---|---|
| 5000218036-ELD | 0001-AU-VWT | – | 02 OF 21 | 5 |

BAR = 1" AT PLOT SCALE
REF: A6798A
STD: "B" 11x17

Mar 09, 2020 15:32:01 – G:\Projets A67XX\A6798A @ A6798D – VEOLIA – 5000218036 Iqaluit WWTP Upgrade\DOC\DESSIN\000-DRAWINGS\LCP-02-300\REV 5\5000218036-ELD-0001-AU-VWT-002.dwg – sbouya

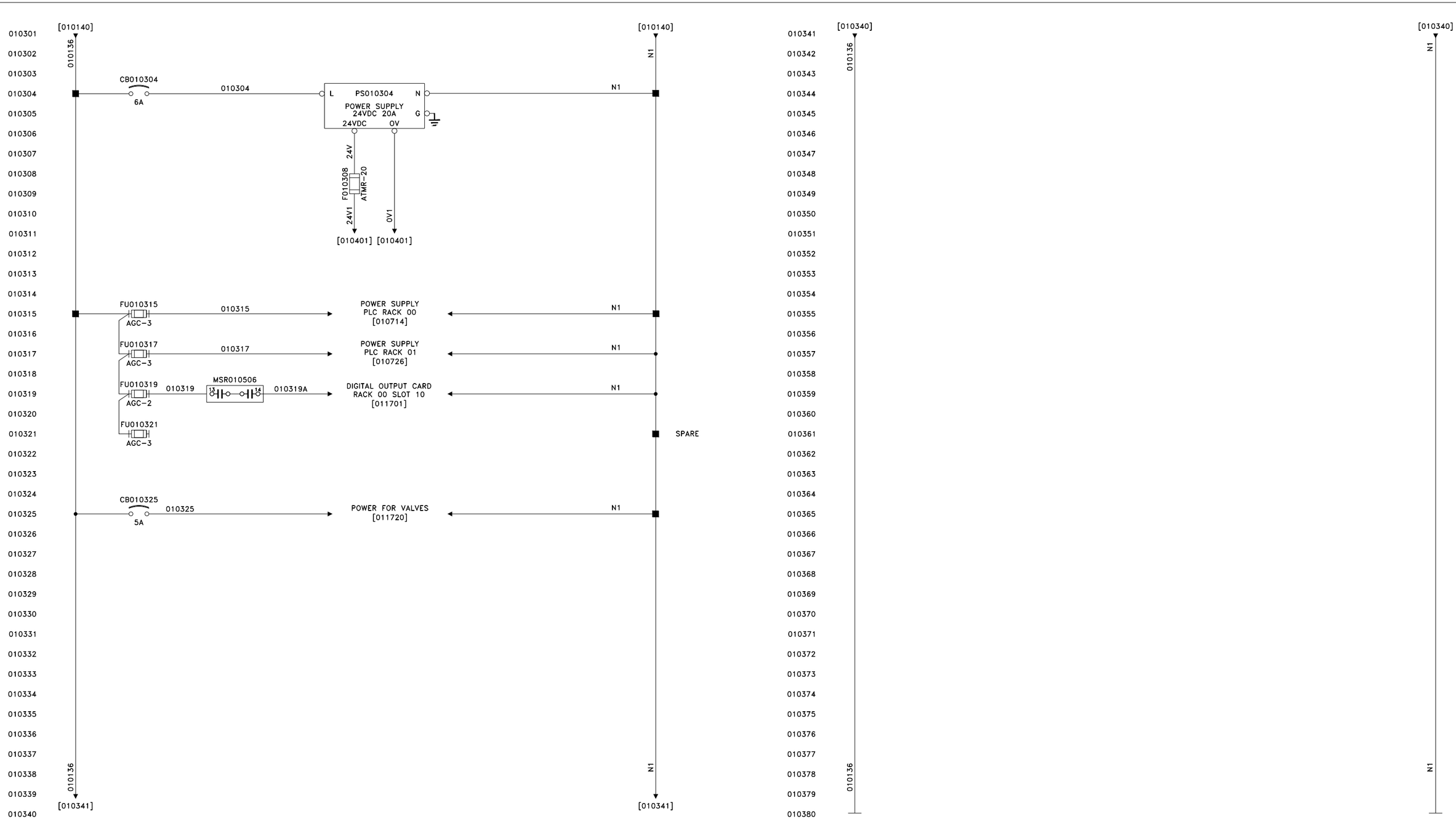


BAR = 1" AT PLOT SCALE

REF: A6798A

STD: "B" 11x17

| REV | DESCRIPTION | DATE | REVD | CHKD | APVD | ECN |
|---|---|---|---|---|---|---|
| 5 | AS BUILT \|\| FIELD MODIFICATION | 2020-02-28 | SB | RA | – | – |
| 4 | AS BUILT \|\| FIELD MODIFICATION | 2019-07-29 | JC | RA | – | – |
| 3 | AS BUILT | 2019-03-27 | HZ | RA | – | – |
| 2 | FOR FABRICATION | 2019-03-19 | HZ | RA | – | – |
| 1 | FOR APPROVAL | 2019-01-03 | HZ | RA | – | – |

**CONFIDENTIALITY AND INTELLECTUAL PROPERTY NOTICE**
ALL INFORMATION CONTAINED IN THIS DOCUMENT IS THE SOLE PROPERTY OF VEOLIA WATER TECHNOLOGIES CANADA INC. AND IS PROTECTED BY ALL APPLICABLE LAWS, INCLUDING BUT NOT LIMITED TO COPYRIGHT AND OTHER INTELLECTUAL PROPERTY LAWS. THE DESIGN CONCEPTS AND INFORMATION CONTAINED HEREIN ARE PROPRIETARY TO V.W.T AND ARE SUBMITTED IN CONFIDENCE. THEY ARE NOT TRANSFERABLE. THEY MUST BE USED ONLY FOR THE PURPOSE FOR WHICH THE DOCUMENT IS EXPRESSLY SUBMITTED AND NO IMPLICIT LICENCE IS GRANTED OTHERWISE BY THE SUBMISSION OF THIS DOCUMENT. THEY ARE CONFIDENTIAL AND PRIVILEGED INFORMATION OF V.W.T. AND THEY MUST NOT BE DISCLOSED, REPRODUCED, LOANED, REMITTED OR USED IN ANY OTHER MANNER WITHOUT THE EXPRESS WRITTEN CONSENT OF V.W.T. V.W.T. ASSUMES NO RESPONSIBILITY OR LIABILITY FOR THE USE OF THIS DOCUMENT OR THE DESIGN CONCEPTS AND INFORMATION CONTAINED HEREIN FOR ANOTHER PROJECT, OR IN A MANNER THAT DOES NOT RELATE TO THE FITNESS OR PURPOSE OF THIS DOCUMENT. IN NO EVENT SHALL THIS DOCUMENT OR THE DESIGN CONCEPTS AND INFORMATION CONTAINED HEREIN BE USED IN A MANNER DETRIMENTAL TO THE INTEREST OF V.W.T. ALL COPYRIGHT, PATENT AND OTHER INTELLECTUAL PROPERTY RIGHTS ARE RESERVED. ACCEPTANCE OF THE DELIVERY OF THIS DOCUMENT CONSTITUTES AGREEMENT TO THESE TERMS AND CONDITIONS.

| | |
|---|---|
| DESIGNER | DATE |
| – | – |
| CHECKER | DATE |
| – | – |
| ENGINEER | DATE |
| – | – |
| SCALE: | N/A |

TITLE
CONTROL PANEL LCP-02-300
ELECTRICAL SCHEMATIC

CLIENT
WWTP UPGRADE
CITY OF IQALUIT

VEOLIA
VEOLIA WATER TECHNOLOGIES CANADA INC. 4105 Sartelon, Saint-Laurent, Qc, Canada. Tel: (514) 334-7230

| PROJECT | DRAWING | INTERNAL | SHEET | REV |
|---|---|---|---|---|
| 5000218036-ELD | 0001-AU-VWT | – | 03 OF 21 | 5 |

Mar 09, 2020 15:32:03 - G:\Projets A67XX\A6798A @ A6798D - VEOLIA - 5000218036 Iqaluit WWTP Upgrade\DOC\DESSIN\000-DRAWINGS\LCP-02-300\REV 5\5000218036-ELD-0001-AU-VWT-003.dwg - sbouya

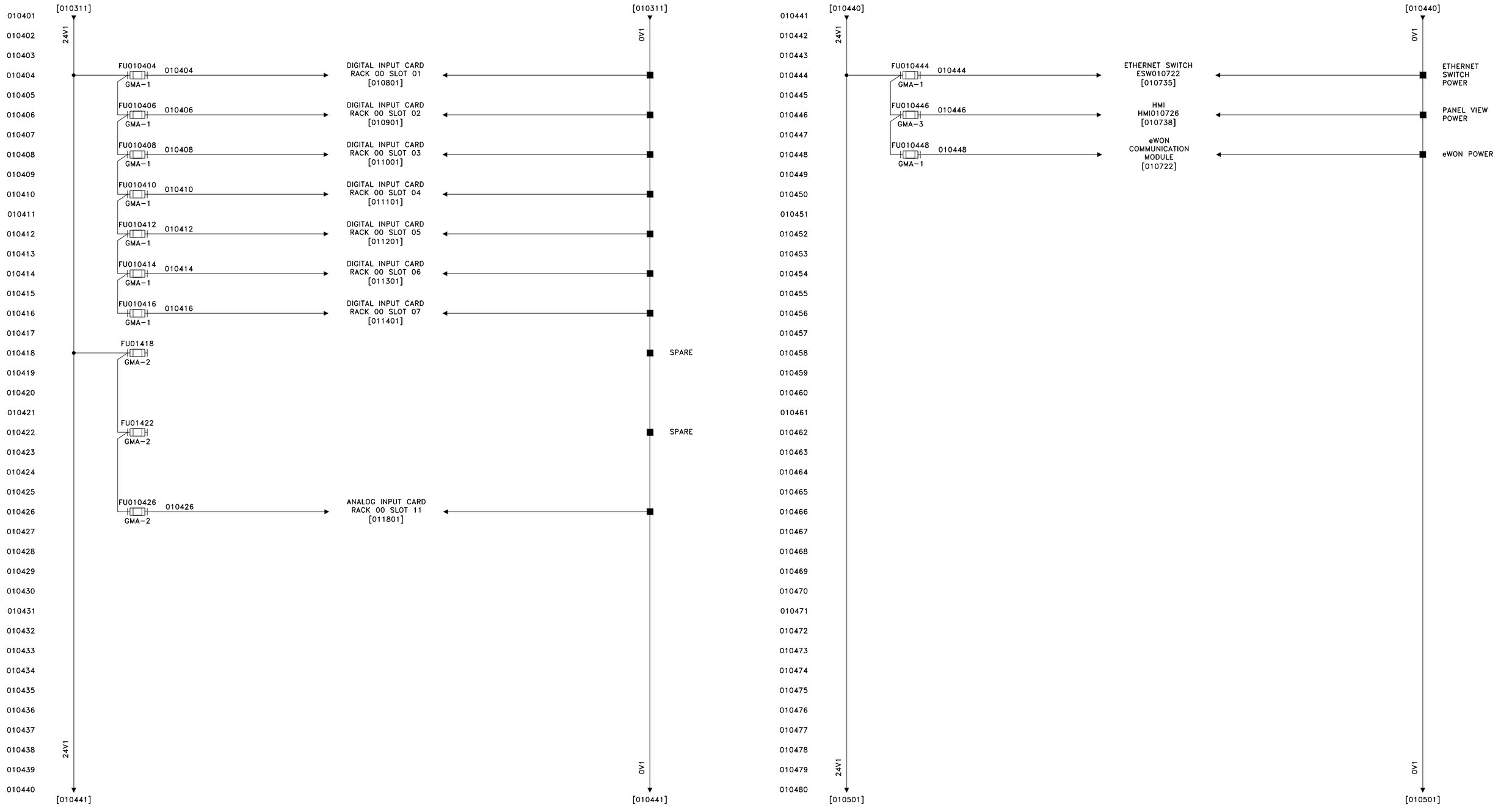


| REV | DESCRIPTION | DATE | REVD | CHKD | APVD | ECN |
|---|---|---|---|---|---|---|
| 5 | AS BUILT \|\| FIELD MODIFICATION | 2020-02-28 | SB | RA | – | – |
| 4 | AS BUILT \|\| FIELD MODIFICATION | 2019-07-29 | JC | RA | – | – |
| 3 | AS BUILT | 2019-03-27 | HZ | RA | – | – |
| 2 | FOR FABRICATION | 2019-03-19 | HZ | RA | – | – |
| 1 | FOR APPROVAL | 2019-01-03 | HZ | RA | – | – |

**CONFIDENTIALITY AND INTELLECTUAL PROPERTY NOTICE**
ALL INFORMATION CONTAINED IN THIS DOCUMENT IS THE SOLE PROPERTY OF VEOLIA WATER TECHNOLOGIES CANADA INC. AND IS PROTECTED BY ALL APPLICABLE LAWS, INCLUDING BUT NOT LIMITED TO COPYRIGHT AND OTHER INTELLECTUAL PROPERTY LAWS. THE DESIGN CONCEPTS AND INFORMATION CONTAINED HEREIN ARE PROPRIETARY TO V.W.T AND ARE SUBMITTED IN CONFIDENCE. THEY ARE NOT TRANSFERABLE. THEY MUST BE USED ONLY FOR THE PURPOSE FOR WHICH THE DOCUMENT IS EXPRESSLY SUBMITTED AND NO IMPLICIT LICENCE IS GRANTED OTHERWISE BY THE SUBMISSION OF THIS DOCUMENT. THEY ARE CONFIDENTIAL AND PRIVILEGED INFORMATION OF V.W.T. AND THEY MUST NOT BE DISCLOSED, REPRODUCED, LOANED, REMITTED OR USED IN ANY OTHER MANNER WITHOUT THE EXPRESS WRITTEN CONSENT OF V.W.T. V.W.T. ASSUMES NO RESPONSIBILITY OR LIABILITY FOR THE USE OF THIS DOCUMENT OR THE DESIGN CONCEPTS AND INFORMATION CONTAINED HEREIN FOR ANOTHER PROJECT, OR IN A MANNER THAT DOES NOT RELATE TO THE FITNESS OR PURPOSE OF THIS DOCUMENT. IN NO EVENT SHALL THIS DOCUMENT OR THE DESIGN CONCEPTS AND INFORMATION CONTAINED HEREIN BE USED IN A MANNER DETRIMENTAL TO THE INTEREST OF V.W.T. ALL COPYRIGHT, PATENT AND OTHER INTELLECTUAL PROPERTY RIGHTS ARE RESERVED. ACCEPTANCE OF THE DELIVERY OF THIS DOCUMENT CONSTITUTES AGREEMENT TO THESE TERMS AND CONDITIONS.

| | |
|---|---|
| DESIGNER | DATE – |
| CHECKER | DATE – |
| ENGINEER | DATE – |
| SCALE: | N/A |

TITLE
CONTROL PANEL LCP-02-300
ELECTRICAL SCHEMATIC

CLIENT
WWTP UPGRADE
CITY OF IQALUIT

VEOLIA
VEOLIA WATER TECHNOLOGIES CANADA INC. 4105 Sartelon, Saint-Laurent, Qc, Canada. Tel: (514) 334-7230

| PROJECT DRAWING | INTERNAL | SHEET | REV |
|---|---|---|---|
| 5000218036-ELD – 0001-AU-VWT | – | 04 OF 21 | 5 |

BAR = 1" AT PLOT SCALE
REF: A6798A
STD: "B" 11x17
Mar 09, 2020 15:32:04 – G:\Projets A67XX\A6798A @ A6798D – VEOLIA – 5000218036 Iqaluit WWTP Upgrade\DOC\DESSIN\000-DRAWINGS\LCP-02-300\REV 5\5000218036-ELD-0001-AU-VWT-004.dwg – sbouya

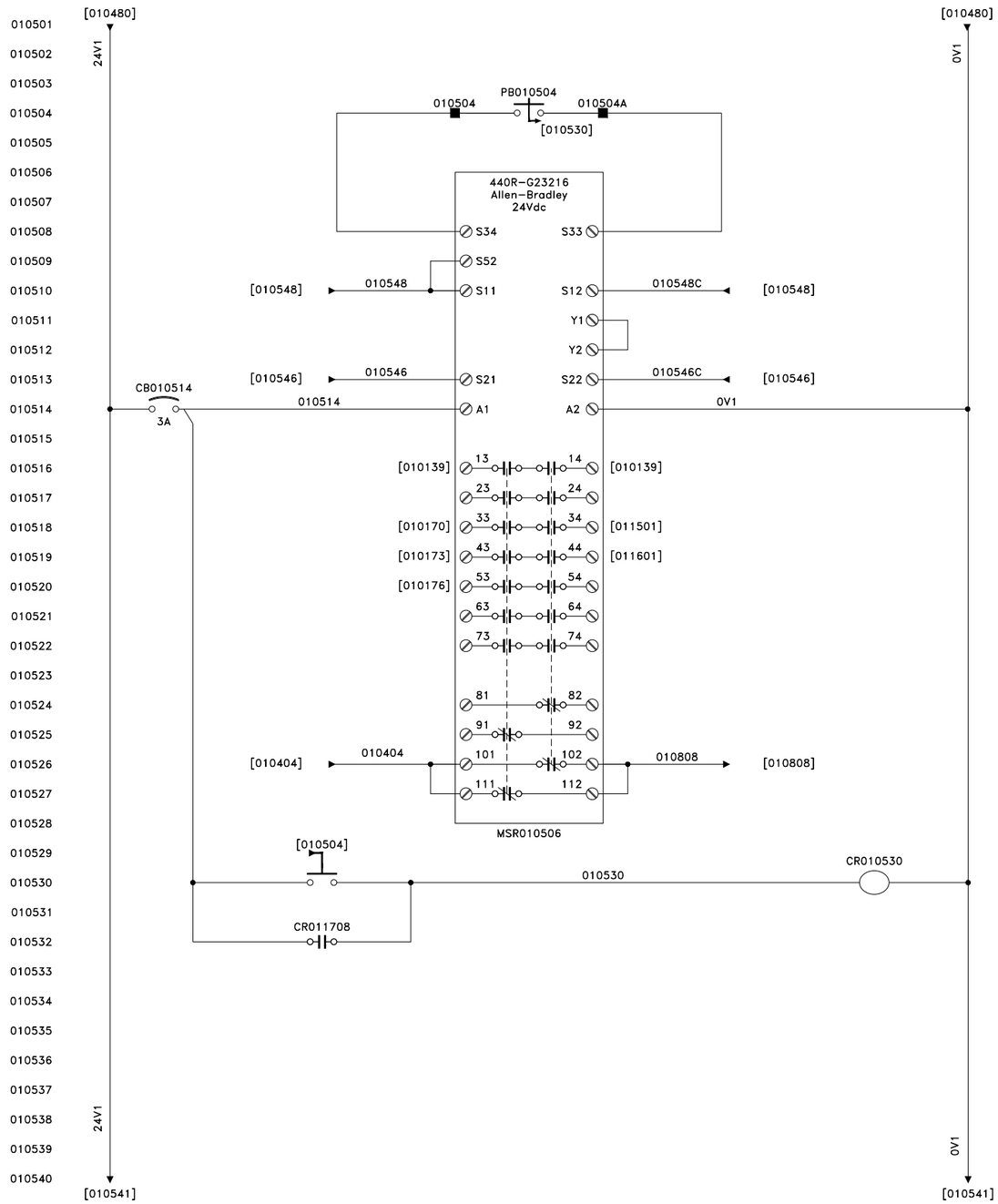


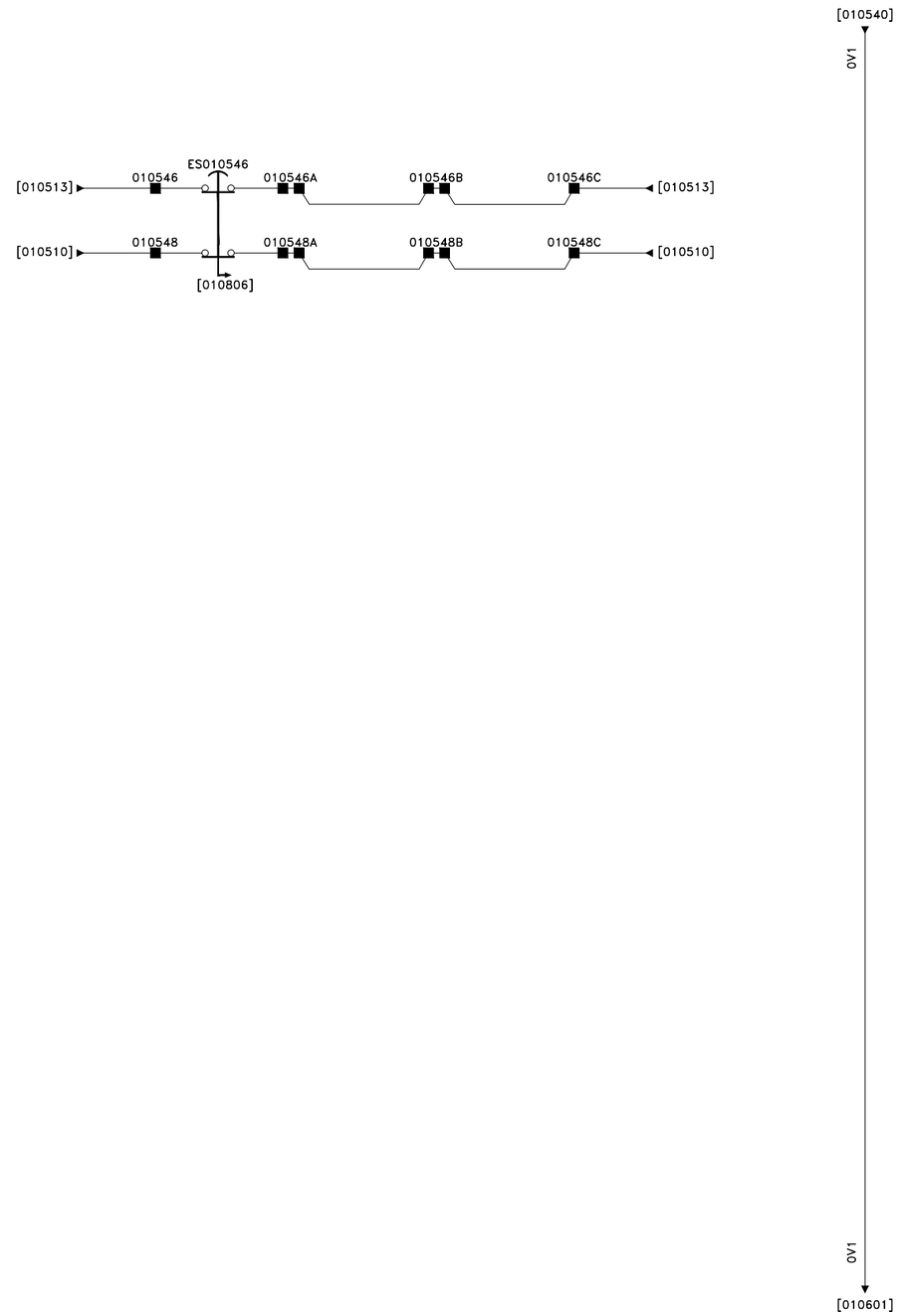


| REV | DESCRIPTION | DATE | REVD | CHKD | APVD | ECN |
|---|---|---|---|---|---|---|
| 5 | AS BUILT \|\| FIELD MODIFICATION | 2020-02-28 | SB | RA | – | – |
| 4 | AS BUILT \|\| FIELD MODIFICATION | 2019-07-29 | JC | RA | – | – |
| 3 | AS BUILT | 2019-03-27 | HZ | RA | – | – |
| 2 | FOR FABRICATION | 2019-03-19 | HZ | RA | – | – |
| 1 | FOR APPROVAL | 2019-01-03 | HZ | RA | – | – |

**CONFIDENTIALITY AND INTELLECTUAL PROPERTY NOTICE**
ALL INFORMATION CONTAINED IN THIS DOCUMENT IS THE SOLE PROPERTY OF VEOLIA WATER TECHNOLOGIES CANADA INC. AND IS PROTECTED BY ALL APPLICABLE LAWS, INCLUDING BUT NOT LIMITED TO COPYRIGHT AND OTHER INTELLECTUAL PROPERTY LAWS. THE DESIGN CONCEPTS AND INFORMATION CONTAINED HEREIN ARE PROPRIETARY TO V.W.T AND ARE SUBMITTED IN CONFIDENCE. THEY ARE NOT TRANSFERABLE. THEY MUST BE USED ONLY FOR THE PURPOSE FOR WHICH THE DOCUMENT IS EXPRESSLY SUBMITTED AND NO IMPLICIT LICENCE IS GRANTED OTHERWISE BY THE SUBMISSION OF THIS DOCUMENT. THEY ARE CONFIDENTIAL AND PRIVILEGED INFORMATION OF V.W.T. AND THEY MUST NOT BE DISCLOSED, REPRODUCED, LOANED, REMITTED OR USED IN ANY OTHER MANNER WITHOUT THE EXPRESS WRITTEN CONSENT OF V.W.T. V.W.T. ASSUMES NO RESPONSIBILITY OR LIABILITY FOR THE USE OF THIS DOCUMENT OR THE DESIGN CONCEPTS AND INFORMATION CONTAINED HEREIN FOR ANOTHER PROJECT, OR IN A MANNER THAT DOES NOT RELATE TO THE FITNESS OR PURPOSE OF THIS DOCUMENT. IN NO EVENT SHALL THIS DOCUMENT OR THE DESIGN CONCEPTS AND INFORMATION CONTAINED HEREIN BE USED IN A MANNER DETRIMENTAL TO THE INTEREST OF V.W.T. ALL COPYRIGHT, PATENT AND OTHER INTELLECTUAL PROPERTY RIGHTS ARE RESERVED. ACCEPTANCE OF THE DELIVERY OF THIS DOCUMENT CONSTITUTES AGREEMENT TO THESE TERMS AND CONDITIONS.

| | |
|---|---|
| DESIGNER | DATE – |
| CHECKER | DATE – |
| ENGINEER | DATE – |
| SCALE: | N/A |

TITLE
CONTROL PANEL LCP-02-300
ELECTRICAL SCHEMATIC

CLIENT
WWTP UPGRADE
CITY OF IQALUIT

VEOLIA
VEOLIA WATER TECHNOLOGIES CANADA INC. 4105 Sartelon, Saint-Laurent, Qc, Canada. Tel: (514) 334-7230

| PROJECT / DRAWING | INTERNAL | SHEET | REV |
|---|---|---|---|
| 5000218036-ELD – 0001-AU-VWT | – | 05 OF 21 | 5 |

BAR = 1" AT PLOT SCALE
REF: A6798A
STD: "B" 11x17

Mar 09, 2020 15:32:06 - G:\Projets A67XX\A6798A @ A6798D - VEOLIA - 5000218036 Iqaluit WWTP Upgrade\DOC\DESSIN\000-DRAWINGS\LCP-02-300\REV 5\5000218036-ELD-0001-AU-VWT-005.dwg - sbouya

BAR = 1" AT PLOT SCALE
REF: 4
STD: "B" 11x17

Mar 09, 2020 15:32:08 - G:\Projets A67XX\A6798A @ A6798D - VEOLIA - 5000218036 Iqaluit WWTP Upgrade\DOC\DESSIN\000-DRAWINGS\LCP-02-300\REV 5\5000218036-ELD-0001-AU-VWT-006.dwg - sbouya

[010580]
24V1
010601
010602
010603
010604
010605
010606
010607
010608
010609
010610
010611
010612
010613
010614
010615
010616
010617
010618
010619
010620
010621
010622
010623
010624
010625
010626
010627
010628
010629
010630
010631
010632
010633
010634
010635
010636
010637
010638
24V1
010639
010640
[010641]

[010580]
0V1
0V1
[010641]

[010640]
010641
010642
24V1
010643
010644
010645
010646
010647
010648
010649
010650
010651
010652
010653
010654
010655
010656
010657
010658
010659
010660
010661
010662
010663
010664
010665
010666
010667
010668
010669
010670
010671
010672
010673
010674
010675
010676
010677
010678
010679
24V1
010680

[010640]
0V1
SPARE
0V1

| REV | DESCRIPTION | DATE | REVD | CHKD | APVD | ECN |
|---|---|---|---|---|---|---|
| 5 | AS BUILT \|\| FIELD MODIFICATION | 2020-02-28 | SB | RA | – | – |
| 4 | AS BUILT \|\| FIELD MODIFICATION | 2019-07-29 | JC | RA | – | – |
| 3 | AS BUILT | 2019-03-27 | HZ | RA | – | – |
| 2 | FOR FABRICATION | 2019-03-19 | HZ | RA | – | – |
| 1 | FOR APPROVAL | 2019-01-03 | HZ | RA | – | – |

**CONFIDENTIALITY AND INTELLECTUAL PROPERTY NOTICE**
ALL INFORMATION CONTAINED IN THIS DOCUMENT IS THE SOLE PROPERTY OF VEOLIA WATER TECHNOLOGIES CANADA INC. AND IS PROTECTED BY ALL APPLICABLE LAWS, INCLUDING BUT NOT LIMITED TO COPYRIGHT AND OTHER INTELLECTUAL PROPERTY LAWS. THE DESIGN CONCEPTS AND INFORMATION CONTAINED HEREIN ARE PROPRIETARY TO V.W.T AND ARE SUBMITTED IN CONFIDENCE. THEY ARE NOT TRANSFERABLE. THEY MUST BE USED ONLY FOR THE PURPOSE FOR WHICH THE DOCUMENT IS EXPRESSLY SUBMITTED AND NO IMPLICIT LICENCE IS GRANTED OTHERWISE BY THE SUBMISSION OF THIS DOCUMENT. THEY ARE CONFIDENTIAL AND PRIVILEGED INFORMATION OF V.W.T. AND THEY MUST NOT BE DISCLOSED, REPRODUCED, LOANED, REMITTED OR USED IN ANY OTHER MANNER WITHOUT THE EXPRESS WRITTEN CONSENT OF V.W.T. V.W.T. ASSUMES NO RESPONSIBILITY OR LIABILITY FOR THE USE OF THIS DOCUMENT OR THE DESIGN CONCEPTS AND INFORMATION CONTAINED HEREIN FOR ANOTHER PROJECT, OR IN A MANNER THAT DOES NOT RELATE TO THE FITNESS OR PURPOSE OF THIS DOCUMENT. IN NO EVENT SHALL THIS DOCUMENT OR THE DESIGN CONCEPTS AND INFORMATION CONTAINED HEREIN BE USED IN A MANNER DETRIMENTAL TO THE INTEREST OF V.W.T. ALL COPYRIGHT, PATENT AND OTHER INTELLECTUAL PROPERTY RIGHTS ARE RESERVED. ACCEPTANCE OF THE DELIVERY OF THIS DOCUMENT CONSTITUTES AGREEMENT TO THESE TERMS AND CONDITIONS.

| | |
|---|---|
| DESIGNER | DATE |
| – | – |
| CHECKER | DATE |
| – | – |
| ENGINEER | DATE |
| – | – |
| SCALE: N/A | |

TITLE
CONTROL PANEL LCP-02-300
ELECTRICAL SCHEMATIC

CLIENT
WWTP UPGRADE
CITY OF IQALUIT

VEOLIA
VEOLIA WATER TECHNOLOGIES CANADA INC. 4105 Sartelon, Saint-Laurent, Qc, Canada. Tel: (514) 334-7230

| PROJECT DRAWING | INTERNAL | SHEET | REV |
|---|---|---|---|
| 5000218036-ELD – 0001-AU-VWT | – | 06 OF 21 | 5 |

BAR = 1" AT PLOT SCALE
REF: A6798A
STD: "B" 11x17

010701
010702
010703
010704
010705
010706
010707
010708
010709
010710
010711
010712
010713
010714
010715
010716
010717
010718
010719
010720
010721
010722
010723
010724
010725
010726
010727
010728
010729
010730
010731
010732
010733
010734
010735
010736
010737
010738
010739
010740

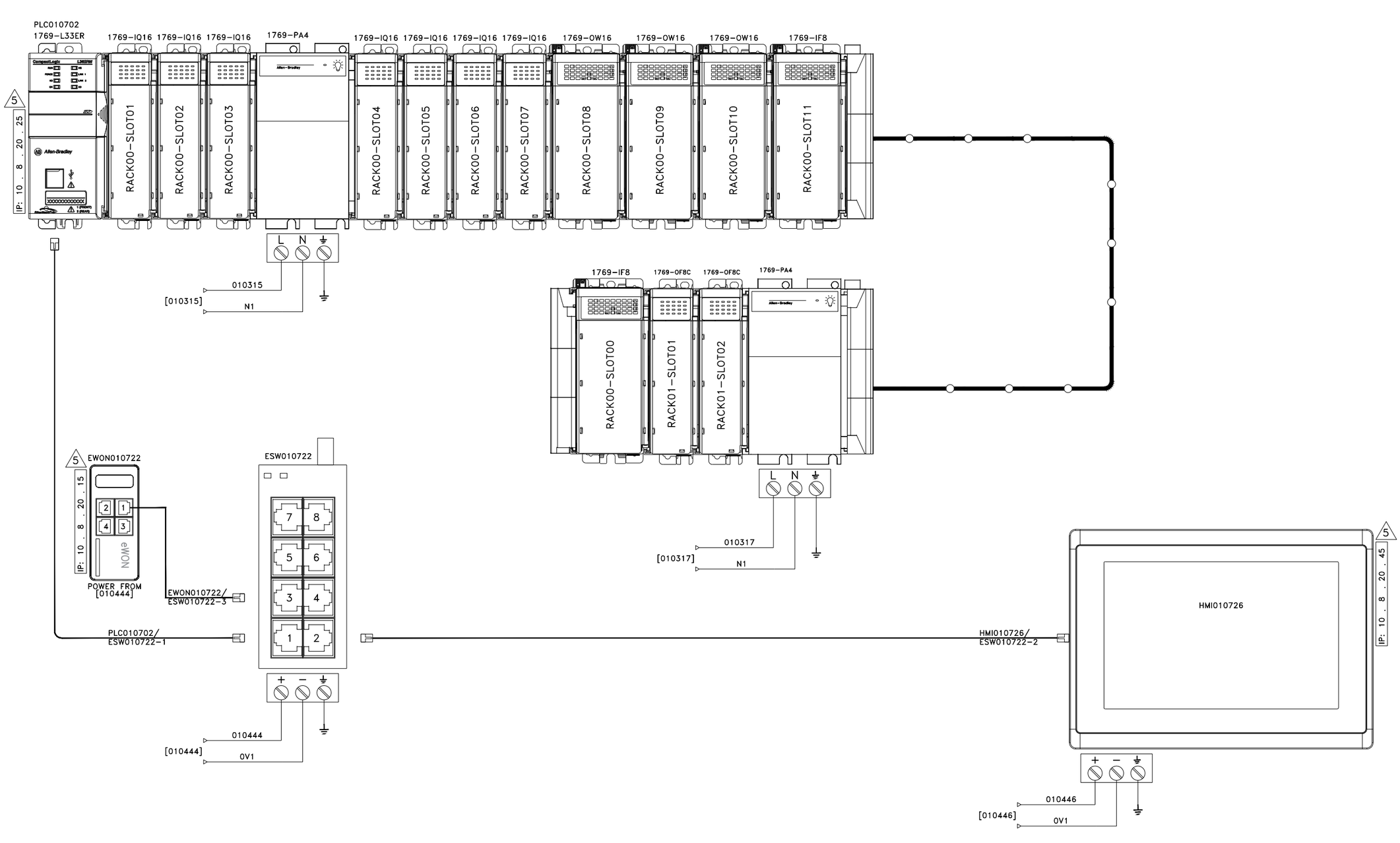


| REV | DESCRIPTION | DATE | REVD | CHKD | APVD | ECN |
|---|---|---|---|---|---|---|
| 5 | AS BUILT \|\| FIELD MODIFICATION | 2020-02-28 | SB | RA | – | – |
| 4 | AS BUILT \|\| FIELD MODIFICATION | 2019-07-29 | JC | RA | – | – |
| 3 | AS BUILT | 2019-03-27 | HZ | RA | – | – |
| 2 | FOR FABRICATION | 2019-03-19 | HZ | RA | – | – |
| 1 | FOR APPROVAL | 2019-01-03 | HZ | RA | – | – |

**CONFIDENTIALITY AND INTELLECTUAL PROPERTY NOTICE**
ALL INFORMATION CONTAINED IN THIS DOCUMENT IS THE SOLE PROPERTY OF VEOLIA WATER TECHNOLOGIES CANADA INC. AND IS PROTECTED BY ALL APPLICABLE LAWS, INCLUDING BUT NOT LIMITED TO COPYRIGHT AND OTHER INTELLECTUAL PROPERTY LAWS. THE DESIGN CONCEPTS AND INFORMATION CONTAINED HEREIN ARE PROPRIETARY TO V.W.T AND ARE SUBMITTED IN CONFIDENCE. THEY ARE NOT TRANSFERABLE. THEY MUST BE USED ONLY FOR THE PURPOSE FOR WHICH THE DOCUMENT IS EXPRESSLY SUBMITTED AND NO IMPLICIT LICENCE IS GRANTED OTHERWISE BY THE SUBMISSION OF THIS DOCUMENT. THEY ARE CONFIDENTIAL AND PRIVILEGED INFORMATION OF V.W.T. AND THEY MUST NOT BE DISCLOSED, REPRODUCED, LOANED, REMITTED OR USED IN ANY OTHER MANNER WITHOUT THE EXPRESS WRITTEN CONSENT OF V.W.T. V.W.T. ASSUMES NO RESPONSIBILITY OR LIABILITY FOR THE USE OF THIS DOCUMENT OR THE DESIGN CONCEPTS AND INFORMATION CONTAINED HEREIN FOR ANOTHER PROJECT, OR IN A MANNER THAT DOES NOT RELATE TO THE FITNESS OR PURPOSE OF THIS DOCUMENT. IN NO EVENT SHALL THIS DOCUMENT OR THE DESIGN CONCEPTS AND INFORMATION CONTAINED HEREIN BE USED IN A MANNER DETRIMENTAL TO THE INTEREST OF V.W.T. ALL COPYRIGHT, PATENT AND OTHER INTELLECTUAL PROPERTY RIGHTS ARE RESERVED. ACCEPTANCE OF THE DELIVERY OF THIS DOCUMENT CONSTITUTES AGREEMENT TO THESE TERMS AND CONDITIONS.

| | | |
|---|---|---|
| DESIGNER | – | DATE – |
| CHECKER | – | DATE – |
| ENGINEER | – | DATE – |
| SCALE: | N/A | |

TITLE
CONTROL PANEL LCP-02-300
ELECTRICAL SCHEMATIC

CLIENT
WWTP UPGRADE
CITY OF IQALUIT

VEOLIA WATER TECHNOLOGIES CANADA INC. 4105 Sartelon, Saint-Laurent, Qc, Canada. Tel: (514) 334-7230

| PROJECT / DRAWING | INTERNAL | SHEET | REV |
|---|---|---|---|
| 5000218036-ELD – 0001-AU-VWT | - | 07 OF 21 | 5 |

Mar 09, 2020 15:32:09 - G:\Projets A67XX\A6798A @ A6798D - VEOLIA - 5000218036 Iqaluit WWTP Upgrade\DOC\DESSIN\000-DRAWINGS\LCP-02-300\REV 5\5000218036-ELD-0001-AU-VWT-007.dwg - sbouya

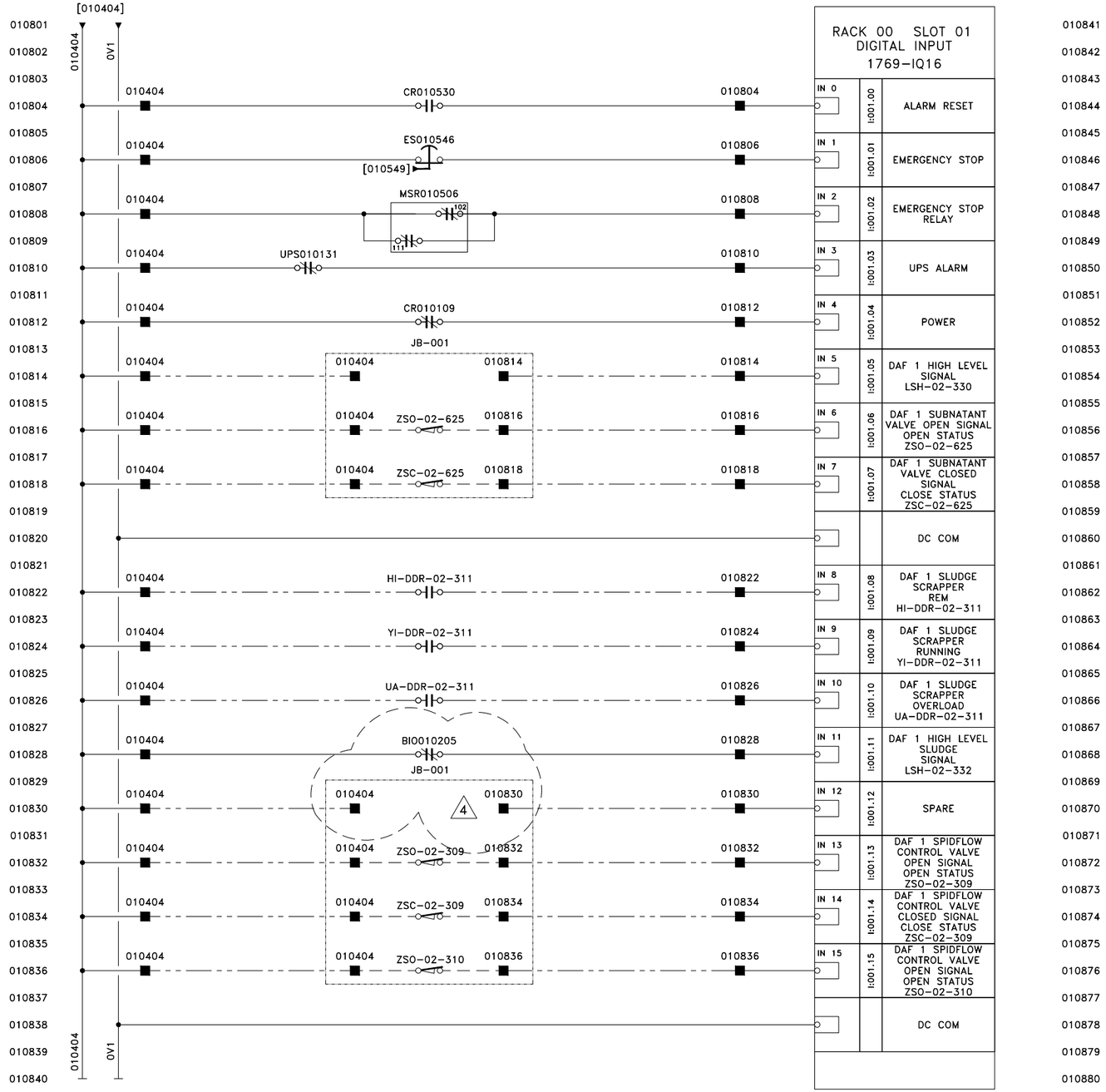


| RACK 00 SLOT 01 DIGITAL INPUT 1769-IQ16 | | |
|---|---|---|
| IN 0 | I:001.00 | ALARM RESET |
| IN 1 | I:001.01 | EMERGENCY STOP |
| IN 2 | I:001.02 | EMERGENCY STOP RELAY |
| IN 3 | I:001.03 | UPS ALARM |
| IN 4 | I:001.04 | POWER |
| IN 5 | I:001.05 | DAF 1 HIGH LEVEL SIGNAL LSH-02-330 |
| IN 6 | I:001.06 | DAF 1 SUBNATANT VALVE OPEN SIGNAL OPEN STATUS ZSO-02-625 |
| IN 7 | I:001.07 | DAF 1 SUBNATANT VALVE CLOSED SIGNAL CLOSE STATUS ZSC-02-625 |
| | | DC COM |
| IN 8 | I:001.08 | DAF 1 SLUDGE SCRAPPER REM HI-DDR-02-311 |
| IN 9 | I:001.09 | DAF 1 SLUDGE SCRAPPER RUNNING YI-DDR-02-311 |
| IN 10 | I:001.10 | DAF 1 SLUDGE SCRAPPER OVERLOAD UA-DDR-02-311 |
| IN 11 | I:001.11 | DAF 1 HIGH LEVEL SLUDGE SIGNAL LSH-02-332 |
| IN 12 | I:001.12 | SPARE |
| IN 13 | I:001.13 | DAF 1 SPIDFLOW CONTROL VALVE OPEN SIGNAL OPEN STATUS ZSO-02-309 |
| IN 14 | I:001.14 | DAF 1 SPIDFLOW CONTROL VALVE CLOSED SIGNAL CLOSE STATUS ZSC-02-309 |
| IN 15 | I:001.15 | DAF 1 SPIDFLOW CONTROL VALVE OPEN SIGNAL OPEN STATUS ZSO-02-310 |
| | | DC COM |

BAR = 1" AT PLOT SCALE

REF: A6798A

STD: "B" 11x17

WIRING

VEOLIA

CUSTOMER

INTERNAL WIRING

| REV | DESCRIPTION | DATE | REVD | CHKD | APVD | ECN |
|---|---|---|---|---|---|---|
| 5 | AS BUILT \|\| FIELD MODIFICATION | 2020-02-28 | SB | RA | – | – |
| 4 | AS BUILT \|\| FIELD MODIFICATION | 2019-07-29 | JC | RA | – | – |
| 3 | AS BUILT | 2019-03-27 | HZ | RA | – | – |
| 2 | FOR FABRICATION | 2019-03-19 | HZ | RA | – | – |
| 1 | FOR APPROVAL | 2019-01-03 | HZ | RA | – | – |


**CONFIDENTIALITY AND INTELLECTUAL PROPERTY NOTICE**

ALL INFORMATION CONTAINED IN THIS DOCUMENT IS THE SOLE PROPERTY OF VEOLIA WATER TECHNOLOGIES CANADA INC. AND IS PROTECTED BY ALL APPLICABLE LAWS, INCLUDING BUT NOT LIMITED TO COPYRIGHT AND OTHER INTELLECTUAL PROPERTY LAWS. THE DESIGN CONCEPTS AND INFORMATION CONTAINED HEREIN ARE PROPRIETARY TO V.W.T AND ARE SUBMITTED IN CONFIDENCE. THEY ARE NOT TRANSFERABLE. THEY MUST BE USED ONLY FOR THE PURPOSE FOR WHICH THE DOCUMENT IS EXPRESSLY SUBMITTED AND NO IMPLICIT LICENCE IS GRANTED OTHERWISE BY THE SUBMISSION OF THIS DOCUMENT. THEY ARE CONFIDENTIAL AND PRIVILEGED INFORMATION OF V.W.T. AND THEY MUST NOT BE DISCLOSED, REPRODUCED, LOANED, REMITTED OR USED IN ANY OTHER MANNER WITHOUT THE EXPRESS WRITTEN CONSENT OF V.W.T. V.W.T. ASSUMES NO RESPONSIBILITY OR LIABILITY FOR THE USE OF THIS DOCUMENT OR THE DESIGN CONCEPTS AND INFORMATION CONTAINED HEREIN FOR ANOTHER PROJECT, OR IN A MANNER THAT DOES NOT RELATE TO THE FITNESS OR PURPOSE OF THIS DOCUMENT. IN NO EVENT SHALL THIS DOCUMENT OR THE DESIGN CONCEPTS AND INFORMATION CONTAINED HEREIN BE USED IN A MANNER DETRIMENTAL TO THE INTEREST OF V.W.T. ALL COPYRIGHT, PATENT AND OTHER INTELLECTUAL PROPERTY RIGHTS ARE RESERVED. ACCEPTANCE OF THE DELIVERY OF THIS DOCUMENT CONSTITUTES AGREEMENT TO THESE TERMS AND CONDITIONS.


| | |
|---|---|
| DESIGNER | DATE |
| – | – |
| CHECKER | DATE |
| – | – |
| ENGINEER | DATE |
| – | – |
| SCALE: N/A | |

TITLE

CONTROL PANEL LCP-02-300
ELECTRICAL SCHEMATIC

CLIENT

WWTP UPGRADE
CITY OF IQALUIT

VEOLIA


VEOLIA WATER TECHNOLOGIES CANADA INC. 4105 Sartelon, Saint-Laurent, Qc, Canada. Tel: (514) 334-7230


| PROJECT DRAWING | INTERNAL | SHEET | REV |
|---|---|---|---|
| 5000218036-ELD – 0001-AU-VWT | – | 08 OF 21 | 5 |


Mar 09, 2020 15:32:11 – G:\Projets A67XX\A6798A @ A6798D – VEOLIA Upgrade\DOC\DESSIN\000-DRAWINGS\LCP-02-300\REV 5\5000218036-ELD-0001-AU-VWT-008.dwg – sbouya

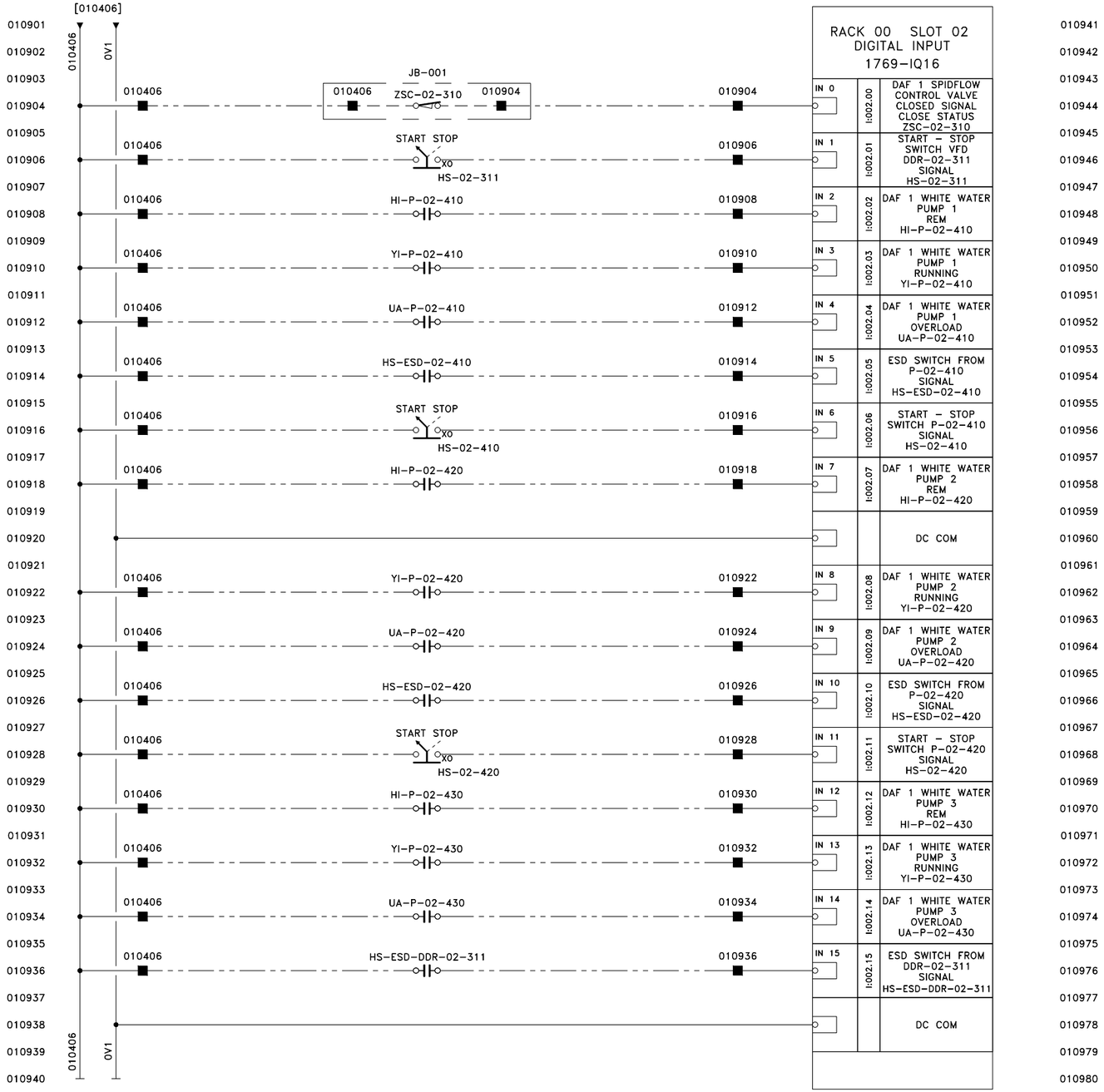


| RACK 00 SLOT 02 DIGITAL INPUT 1769-IQ16 | | |
|---|---|---|
| IN 0 | I:002.00 | DAF 1 SPIDFLOW CONTROL VALVE CLOSED SIGNAL CLOSE STATUS ZSC-02-310 |
| IN 1 | I:002.01 | START - STOP SWITCH VFD DDR-02-311 SIGNAL HS-02-311 |
| IN 2 | I:002.02 | DAF 1 WHITE WATER PUMP 1 REM HI-P-02-410 |
| IN 3 | I:002.03 | DAF 1 WHITE WATER PUMP 1 RUNNING YI-P-02-410 |
| IN 4 | I:002.04 | DAF 1 WHITE WATER PUMP 1 OVERLOAD UA-P-02-410 |
| IN 5 | I:002.05 | ESD SWITCH FROM P-02-410 SIGNAL HS-ESD-02-410 |
| IN 6 | I:002.06 | START - STOP SWITCH P-02-410 SIGNAL HS-02-410 |
| IN 7 | I:002.07 | DAF 1 WHITE WATER PUMP 2 REM HI-P-02-420 |
| | | DC COM |
| IN 8 | I:002.08 | DAF 1 WHITE WATER PUMP 2 RUNNING YI-P-02-420 |
| IN 9 | I:002.09 | DAF 1 WHITE WATER PUMP 2 OVERLOAD UA-P-02-420 |
| IN 10 | I:002.10 | ESD SWITCH FROM P-02-420 SIGNAL HS-ESD-02-420 |
| IN 11 | I:002.11 | START - STOP SWITCH P-02-420 SIGNAL HS-02-420 |
| IN 12 | I:002.12 | DAF 1 WHITE WATER PUMP 3 REM HI-P-02-430 |
| IN 13 | I:002.13 | DAF 1 WHITE WATER PUMP 3 RUNNING YI-P-02-430 |
| IN 14 | I:002.14 | DAF 1 WHITE WATER PUMP 3 OVERLOAD UA-P-02-430 |
| IN 15 | I:002.15 | ESD SWITCH FROM DDR-02-311 SIGNAL HS-ESD-DDR-02-311 |
| | | DC COM |

BAR = 1" AT PLOT SCALE

REF: 4

STD: "B" 11x17

WIRING

VEOLIA

CUSTOMER

INTERNAL WIRING

| REV | DESCRIPTION | DATE | REVD | CHKD | APVD | ECN |
|---|---|---|---|---|---|---|
| 5 | AS BUILT \|\| FIELD MODIFICATION | 2020-02-28 | SB | RA | – | – |
| 4 | AS BUILT \|\| FIELD MODIFICATION | 2019-07-29 | JC | RA | – | – |
| 3 | AS BUILT | 2019-03-27 | HZ | RA | – | – |
| 2 | FOR FABRICATION | 2019-03-19 | HZ | RA | – | – |
| 1 | FOR APPROVAL | 2019-01-03 | HZ | RA | – | – |

**CONFIDENTIALITY AND INTELLECTUAL PROPERTY NOTICE**
ALL INFORMATION CONTAINED IN THIS DOCUMENT IS THE SOLE PROPERTY OF VEOLIA WATER TECHNOLOGIES CANADA INC. AND IS PROTECTED BY ALL APPLICABLE LAWS, INCLUDING BUT NOT LIMITED TO COPYRIGHT AND OTHER INTELLECTUAL PROPERTY LAWS. THE DESIGN CONCEPTS AND INFORMATION CONTAINED HEREIN ARE PROPRIETARY TO V.W.T AND ARE SUBMITTED IN CONFIDENCE. THEY ARE NOT TRANSFERABLE. THEY MUST BE USED ONLY FOR THE PURPOSE FOR WHICH THE DOCUMENT IS EXPRESSLY SUBMITTED AND NO IMPLICIT LICENCE IS GRANTED OTHERWISE BY THE SUBMISSION OF THIS DOCUMENT. THEY ARE CONFIDENTIAL AND PRIVILEGED INFORMATION OF V.W.T. AND THEY MUST NOT BE DISCLOSED, REPRODUCED, LOANED, REMITTED OR USED IN ANY OTHER MANNER WITHOUT THE EXPRESS WRITTEN CONSENT OF V.W.T. V.W.T. ASSUMES NO RESPONSIBILITY OR LIABILITY FOR THE USE OF THIS DOCUMENT OR THE DESIGN CONCEPTS AND INFORMATION CONTAINED HEREIN FOR ANOTHER PROJECT, OR IN A MANNER THAT DOES NOT RELATE TO THE FITNESS OR PURPOSE OF THIS DOCUMENT. IN NO EVENT SHALL THIS DOCUMENT OR THE DESIGN CONCEPTS AND INFORMATION CONTAINED HEREIN BE USED IN A MANNER DETRIMENTAL TO THE INTEREST OF V.W.T. ALL COPYRIGHT, PATENT AND OTHER INTELLECTUAL PROPERTY RIGHTS ARE RESERVED. ACCEPTANCE OF THE DELIVERY OF THIS DOCUMENT CONSTITUTES AGREEMENT TO THESE TERMS AND CONDITIONS.

| | |
|---|---|
| DESIGNER | DATE |
| – | – |
| CHECKER | DATE |
| – | – |
| ENGINEER | DATE |
| – | – |
| SCALE: N/A | |

TITLE
CONTROL PANEL LCP-02-300
ELECTRICAL SCHEMATIC

CLIENT
WWTP UPGRADE
CITY OF IQALUIT

VEOLIA
VEOLIA WATER TECHNOLOGIES CANADA INC. 4105 Sartelon, Saint-Laurent, Qc, Canada. Tel: (514) 334-7230

| PROJECT | DRAWING | INTERNAL | SHEET | REV |
|---|---|---|---|---|
| 5000218036-ELD | 0001-AU-VWT | – | 09 OF 21 | 5 |

Mar 09, 2020 15:32:13 - G:\Projets A67XX\A6798A @ A6798D - VEOLIA Upgrade\DOC\DESSIN\000-DRAWINGS\LCP-02-300\REV 5\5000218036-ELD-0001-AU-VWT-009.dwg - sbouya
5000218036 Iqaluit WWTP

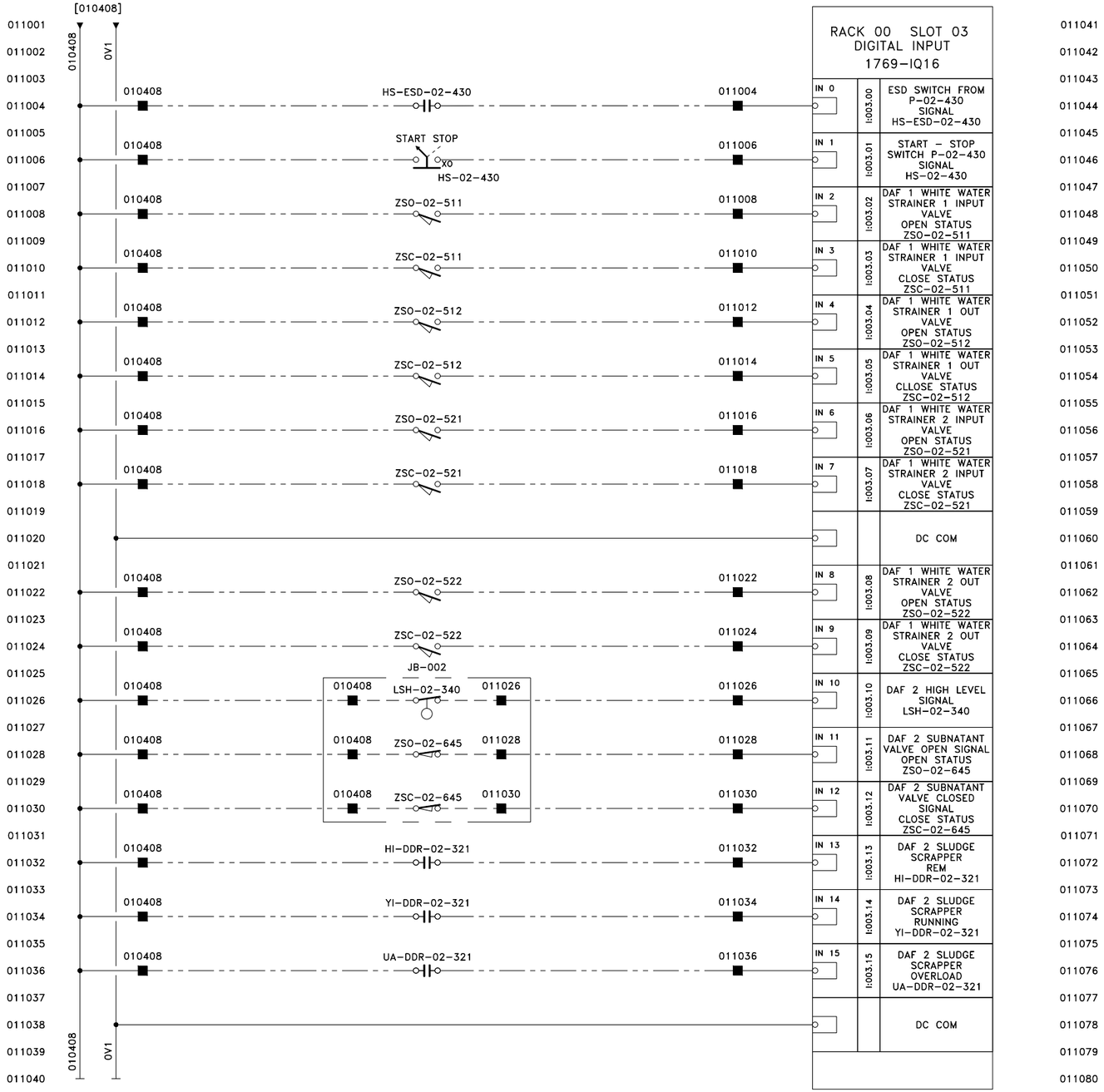


RACK 00 SLOT 03
DIGITAL INPUT
1769-IQ16

| | | |
|---|---|---|
| IN 0 | I:003.00 | ESD SWITCH FROM P-02-430 SIGNAL HS-ESD-02-430 |
| IN 1 | I:003.01 | START - STOP SWITCH P-02-430 SIGNAL HS-02-430 |
| IN 2 | I:003.02 | DAF 1 WHITE WATER STRAINER 1 INPUT VALVE OPEN STATUS ZSO-02-511 |
| IN 3 | I:003.03 | DAF 1 WHITE WATER STRAINER 1 INPUT VALVE CLOSE STATUS ZSC-02-511 |
| IN 4 | I:003.04 | DAF 1 WHITE WATER STRAINER 1 OUT VALVE OPEN STATUS ZSO-02-512 |
| IN 5 | I:003.05 | DAF 1 WHITE WATER STRAINER 1 OUT VALVE CLLOSE STATUS ZSC-02-512 |
| IN 6 | I:003.06 | DAF 1 WHITE WATER STRAINER 2 INPUT VALVE OPEN STATUS ZSO-02-521 |
| IN 7 | I:003.07 | DAF 1 WHITE WATER STRAINER 2 INPUT VALVE CLOSE STATUS ZSC-02-521 |
| | | DC COM |
| IN 8 | I:003.08 | DAF 1 WHITE WATER STRAINER 2 OUT VALVE OPEN STATUS ZSO-02-522 |
| IN 9 | I:003.09 | DAF 1 WHITE WATER STRAINER 2 OUT VALVE CLOSE STATUS ZSC-02-522 |
| IN 10 | I:003.10 | DAF 2 HIGH LEVEL SIGNAL LSH-02-340 |
| IN 11 | I:003.11 | DAF 2 SUBNATANT VALVE OPEN SIGNAL OPEN STATUS ZSO-02-645 |
| IN 12 | I:003.12 | DAF 2 SUBNATANT VALVE CLOSED SIGNAL CLOSE STATUS ZSC-02-645 |
| IN 13 | I:003.13 | DAF 2 SLUDGE SCRAPPER REM HI-DDR-02-321 |
| IN 14 | I:003.14 | DAF 2 SLUDGE SCRAPPER RUNNING YI-DDR-02-321 |
| IN 15 | I:003.15 | DAF 2 SLUDGE SCRAPPER OVERLOAD UA-DDR-02-321 |
| | | DC COM |

011001 011002 011003 011004 011005 011006 011007 011008 011009 011010 011011 011012 011013 011014 011015 011016 011017 011018 011019 011020 011021 011022 011023 011024 011025 011026 011027 011028 011029 011030 011031 011032 011033 011034 011035 011036 011037 011038 011039 011040

011041 011042 011043 011044 011045 011046 011047 011048 011049 011050 011051 011052 011053 011054 011055 011056 011057 011058 011059 011060 011061 011062 011063 011064 011065 011066 011067 011068 011069 011070 011071 011072 011073 011074 011075 011076 011077 011078 011079 011080

BAR = 1" AT PLOT SCALE

REF.: A6798A

STD: "B" 11x17

WIRING

- VEOLIA
- CUSTOMER
- INTERNAL WIRING

| REV | DESCRIPTION | DATE | REVD | CHKD | APVD | ECN |
|---|---|---|---|---|---|---|
| 5 | AS BUILT \|\| FIELD MODIFICATION | 2020-02-28 | SB | RA | – | – |
| 4 | AS BUILT \|\| FIELD MODIFICATION | 2019-07-29 | JC | RA | – | – |
| 3 | AS BUILT | 2019-03-27 | HZ | RA | – | – |
| 2 | FOR FABRICATION | 2019-03-19 | HZ | RA | – | – |
| 1 | FOR APPROVAL | 2019-01-03 | HZ | RA | – | – |

**CONFIDENTIALITY AND INTELLECTUAL PROPERTY NOTICE**
ALL INFORMATION CONTAINED IN THIS DOCUMENT IS THE SOLE PROPERTY OF VEOLIA WATER TECHNOLOGIES CANADA INC. AND IS PROTECTED BY ALL APPLICABLE LAWS, INCLUDING BUT NOT LIMITED TO COPYRIGHT AND OTHER INTELLECTUAL PROPERTY LAWS. THE DESIGN CONCEPTS AND INFORMATION CONTAINED HEREIN ARE PROPRIETARY TO V.W.T AND ARE SUBMITTED IN CONFIDENCE. THEY ARE NOT TRANSFERABLE. THEY MUST BE USED ONLY FOR THE PURPOSE FOR WHICH THE DOCUMENT IS EXPRESSLY SUBMITTED AND NO IMPLICIT LICENCE IS GRANTED OTHERWISE BY THE SUBMISSION OF THIS DOCUMENT. THEY ARE CONFIDENTIAL AND PRIVILEGED INFORMATION OF V.W.T. AND THEY MUST NOT BE DISCLOSED, REPRODUCED, LOANED, REMITTED OR USED IN ANY OTHER MANNER WITHOUT THE EXPRESS WRITTEN CONSENT OF V.W.T. V.W.T. ASSUMES NO RESPONSIBILITY OR LIABILITY FOR THE USE OF THIS DOCUMENT OR THE DESIGN CONCEPTS AND INFORMATION CONTAINED HEREIN FOR ANOTHER PROJECT, OR IN A MANNER THAT DOES NOT RELATE TO THE FITNESS OR PURPOSE OF THIS DOCUMENT. IN NO EVENT SHALL THIS DOCUMENT OR THE DESIGN CONCEPTS AND INFORMATION CONTAINED HEREIN BE USED IN A MANNER DETRIMENTAL TO THE INTEREST OF V.W.T. ALL COPYRIGHT, PATENT AND OTHER INTELLECTUAL PROPERTY RIGHTS ARE RESERVED. ACCEPTANCE OF THE DELIVERY OF THIS DOCUMENT CONSTITUTES AGREEMENT TO THESE TERMS AND CONDITIONS.

| | |
|---|---|
| DESIGNER | DATE |
| – | – |
| CHECKER | DATE |
| – | – |
| ENGINEER | DATE |
| – | – |
| SCALE: | N/A |

TITLE
CONTROL PANEL LCP-02-300
ELECTRICAL SCHEMATIC

CLIENT
WWTP UPGRADE
CITY OF IQALUIT

VEOLIA
VEOLIA WATER TECHNOLOGIES CANADA INC. 4105 Sartelon, Saint-Laurent, Qc, Canada. Tel: (514) 334-7230

| PROJECT DRAWING | INTERNAL | SHEET | REV |
|---|---|---|---|
| 5000218036-ELD – 0001-AU-VWT | – | 10 OF 21 | 5 |

Mar 09, 2020 15:32:14 – G:\Projets A67XX\A6798A @ A6798D – VEOLIA – 5000218036 Iqaluit WWTP Upgrade\DOC\DESSIN\000-DRAWINGS\LCP-02-300\REV 5\5000218036-ELD-0001-AU-VWT-010.dwg – sbouya

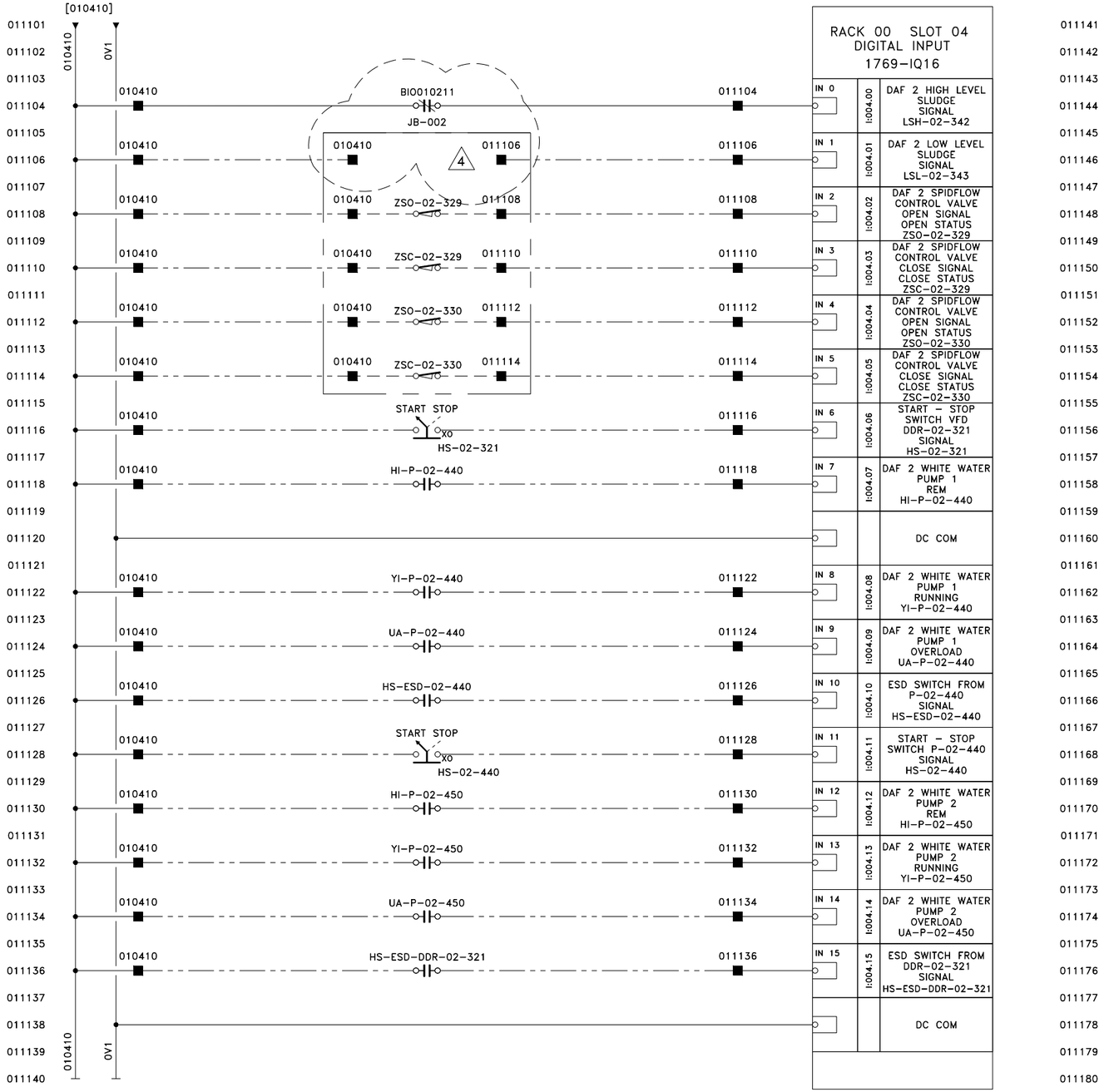


BAR = 1" AT PLOT SCALE

REF: A6798A

STD: "B" 11x17

WIRING

- VEOLIA
- CUSTOMER
- INTERNAL WIRING

| REV | DESCRIPTION | DATE | REVD | CHKD | APVD | ECN |
|---|---|---|---|---|---|---|
| 5 | AS BUILT \|\| FIELD MODIFICATION | 2020-02-28 | SB | RA | – | – |
| 4 | AS BUILT \|\| FIELD MODIFICATION | 2019-07-29 | JC | RA | – | – |
| 3 | AS BUILT | 2019-03-27 | HZ | RA | – | – |
| 2 | FOR FABRICATION | 2019-03-19 | HZ | RA | – | – |
| 1 | FOR APPROVAL | 2019-01-03 | HZ | RA | – | – |

**CONFIDENTIALITY AND INTELLECTUAL PROPERTY NOTICE**
ALL INFORMATION CONTAINED IN THIS DOCUMENT IS THE SOLE PROPERTY OF VEOLIA WATER TECHNOLOGIES CANADA INC. AND IS PROTECTED BY ALL APPLICABLE LAWS, INCLUDING BUT NOT LIMITED TO COPYRIGHT AND OTHER INTELLECTUAL PROPERTY LAWS. THE DESIGN CONCEPTS AND INFORMATION CONTAINED HEREIN ARE PROPRIETARY TO V.W.T AND ARE SUBMITTED IN CONFIDENCE. THEY ARE NOT TRANSFERABLE. THEY MUST BE USED ONLY FOR THE PURPOSE FOR WHICH THE DOCUMENT IS EXPRESSLY SUBMITTED AND NO IMPLICIT LICENCE IS GRANTED OTHERWISE BY THE SUBMISSION OF THIS DOCUMENT. THEY ARE CONFIDENTIAL AND PRIVILEGED INFORMATION OF V.W.T. AND THEY MUST NOT BE DISCLOSED, REPRODUCED, LOANED, REMITTED OR USED IN ANY OTHER MANNER WITHOUT THE EXPRESS WRITTEN CONSENT OF V.W.T. V.W.T. ASSUMES NO RESPONSIBILITY OR LIABILITY FOR THE USE OF THIS DOCUMENT OR THE DESIGN CONCEPTS AND INFORMATION CONTAINED HEREIN FOR ANOTHER PROJECT, OR IN A MANNER THAT DOES NOT RELATE TO THE FITNESS OR PURPOSE OF THIS DOCUMENT. IN NO EVENT SHALL THIS DOCUMENT OR THE DESIGN CONCEPTS AND INFORMATION CONTAINED HEREIN BE USED IN A MANNER DETRIMENTAL TO THE INTEREST OF V.W.T. ALL COPYRIGHT, PATENT AND OTHER INTELLECTUAL PROPERTY RIGHTS ARE RESERVED. ACCEPTANCE OF THE DELIVERY OF THIS DOCUMENT CONSTITUTES AGREEMENT TO THESE TERMS AND CONDITIONS.

| | | DATE |
|---|---|---|
| DESIGNER | – | – |
| CHECKER | – | – |
| ENGINEER | – | – |
| SCALE: | N/A | |

TITLE
CONTROL PANEL LCP-02-300
ELECTRICAL SCHEMATIC

CLIENT
WWTP UPGRADE
CITY OF IQALUIT

VEOLIA
VEOLIA WATER TECHNOLOGIES CANADA INC. 4105 Sartelon, Saint-Laurent, Qc, Canada. Tel: (514) 334-7230

| PROJECT | DRAWING | INTERNAL | SHEET | REV |
|---|---|---|---|---|
| 5000218036-ELD | 0001-AU-VWT | – | 11 OF 21 | 5 |

Mar 09, 2020 15:32:16 - G:\Projets A67XX\A6798A @ A6798D - VEOLIA Upgrade\DOC\DESSIN\000-DRAWINGS\LCP-02-300\REV 5\5000218036-ELD-0001-AU-VWT-011.dwg - sbouya

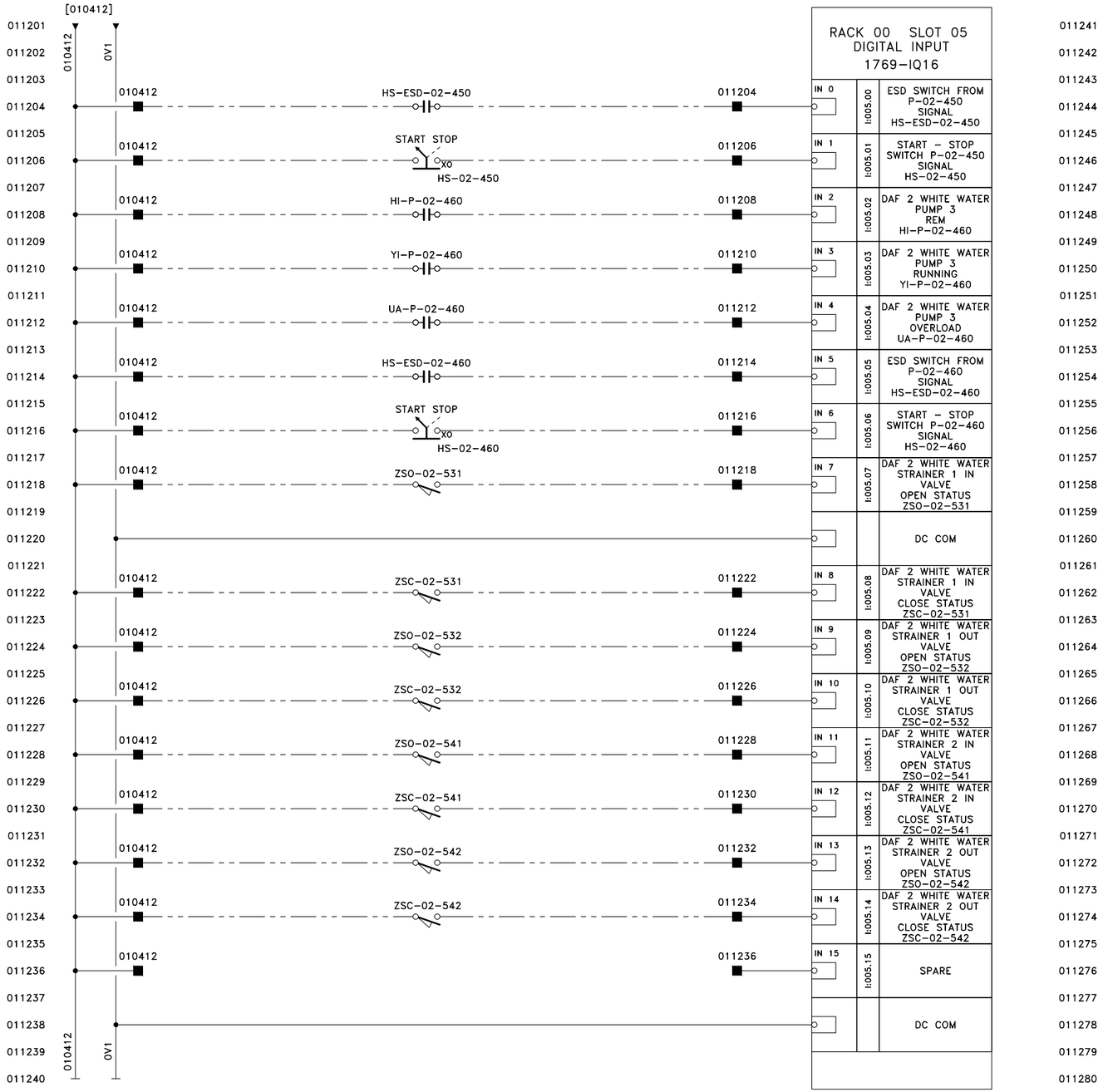


| RACK 00 SLOT 05 DIGITAL INPUT 1769-IQ16 | | |
|---|---|---|
| IN 0 | I:005.00 | ESD SWITCH FROM P-02-450 SIGNAL HS-ESD-02-450 |
| IN 1 | I:005.01 | START - STOP SWITCH P-02-450 SIGNAL HS-02-450 |
| IN 2 | I:005.02 | DAF 2 WHITE WATER PUMP 3 REM HI-P-02-460 |
| IN 3 | I:005.03 | DAF 2 WHITE WATER PUMP 3 RUNNING YI-P-02-460 |
| IN 4 | I:005.04 | DAF 2 WHITE WATER PUMP 3 OVERLOAD UA-P-02-460 |
| IN 5 | I:005.05 | ESD SWITCH FROM P-02-460 SIGNAL HS-ESD-02-460 |
| IN 6 | I:005.06 | START - STOP SWITCH P-02-460 SIGNAL HS-02-460 |
| IN 7 | I:005.07 | DAF 2 WHITE WATER STRAINER 1 IN VALVE OPEN STATUS ZSO-02-531 |
| | | DC COM |
| IN 8 | I:005.08 | DAF 2 WHITE WATER STRAINER 1 IN VALVE CLOSE STATUS ZSC-02-531 |
| IN 9 | I:005.09 | DAF 2 WHITE WATER STRAINER 1 OUT VALVE OPEN STATUS ZSO-02-532 |
| IN 10 | I:005.10 | DAF 2 WHITE WATER STRAINER 1 OUT VALVE CLOSE STATUS ZSC-02-532 |
| IN 11 | I:005.11 | DAF 2 WHITE WATER STRAINER 2 IN VALVE OPEN STATUS ZSO-02-541 |
| IN 12 | I:005.12 | DAF 2 WHITE WATER STRAINER 2 IN VALVE CLOSE STATUS ZSC-02-541 |
| IN 13 | I:005.13 | DAF 2 WHITE WATER STRAINER 2 OUT VALVE OPEN STATUS ZSO-02-542 |
| IN 14 | I:005.14 | DAF 2 WHITE WATER STRAINER 2 OUT VALVE CLOSE STATUS ZSC-02-542 |
| IN 15 | I:005.15 | SPARE |
| | | DC COM |


BAR = 1" AT PLOT SCALE
REF: A6798A
STD: "B" 11x17
Mar 09, 2020 15:32:19 - G:\Projets A67XX\A6798A @ A6798D - VEOLIA - 5000218036 Iqaluit WWTP Upgrade\DOC\DESSIN\000-DRAWINGS\LCP-02-300\REV 5\5000218036-ELD-0001-AU-VWT-012.dwg - sbouya


WIRING

VEOLIA
CUSTOMER
INTERNAL WIRING

| REV | DESCRIPTION | DATE | REVD | CHKD | APVD | ECN |
|---|---|---|---|---|---|---|
| 5 | AS BUILT \|\| FIELD MODIFICATION | 2020-02-28 | SB | RA | – | – |
| 4 | AS BUILT \|\| FIELD MODIFICATION | 2019-07-29 | JC | RA | – | – |
| 3 | AS BUILT | 2019-03-27 | HZ | RA | – | – |
| 2 | FOR FABRICATION | 2019-03-19 | HZ | RA | – | – |
| 1 | FOR APPROVAL | 2019-01-03 | HZ | RA | – | – |


**CONFIDENTIALITY AND INTELLECTUAL PROPERTY NOTICE**
ALL INFORMATION CONTAINED IN THIS DOCUMENT IS THE SOLE PROPERTY OF VEOLIA WATER TECHNOLOGIES CANADA INC. AND IS PROTECTED BY ALL APPLICABLE LAWS, INCLUDING BUT NOT LIMITED TO COPYRIGHT AND OTHER INTELLECTUAL PROPERTY LAWS. THE DESIGN CONCEPTS AND INFORMATION CONTAINED HEREIN ARE PROPRIETARY TO V.W.T AND ARE SUBMITTED IN CONFIDENCE. THEY ARE NOT TRANSFERABLE. THEY MUST BE USED ONLY FOR THE PURPOSE FOR WHICH THE DOCUMENT IS EXPRESSLY SUBMITTED AND NO IMPLICIT LICENCE IS GRANTED OTHERWISE BY THE SUBMISSION OF THIS DOCUMENT. THEY ARE CONFIDENTIAL AND PRIVILEGED INFORMATION OF V.W.T. AND THEY MUST NOT BE DISCLOSED, REPRODUCED, LOANED, REMITTED OR USED IN ANY OTHER MANNER WITHOUT THE EXPRESS WRITTEN CONSENT OF V.W.T. V.W.T. ASSUMES NO RESPONSIBILITY OR LIABILITY FOR THE USE OF THIS DOCUMENT OR THE DESIGN CONCEPTS AND INFORMATION CONTAINED HEREIN FOR ANOTHER PROJECT, OR IN A MANNER THAT DOES NOT RELATE TO THE FITNESS OR PURPOSE OF THIS DOCUMENT. IN NO EVENT SHALL THIS DOCUMENT OR THE DESIGN CONCEPTS AND INFORMATION CONTAINED HEREIN BE USED IN A MANNER DETRIMENTAL TO THE INTEREST OF V.W.T. ALL COPYRIGHT, PATENT AND OTHER INTELLECTUAL PROPERTY RIGHTS ARE RESERVED. ACCEPTANCE OF THE DELIVERY OF THIS DOCUMENT CONSTITUTES AGREEMENT TO THESE TERMS AND CONDITIONS.


| | |
|---|---|
| DESIGNER | DATE |
| – | – |
| CHECKER | DATE |
| – | – |
| ENGINEER | DATE |
| – | – |
| SCALE: | N/A |

TITLE
CONTROL PANEL LCP-02-300
ELECTRICAL SCHEMATIC

CLIENT
WWTP UPGRADE
CITY OF IQALUIT

VEOLIA
VEOLIA WATER TECHNOLOGIES CANADA INC. 4105 Sartelon, Saint-Laurent, Qc, Canada. Tel: (514) 334-7230

| PROJECT | DRAWING | INTERNAL | SHEET | REV |
|---|---|---|---|---|
| 5000218036-ELD | 0001-AU-VWT | - | 12 OF 21 | 5 |

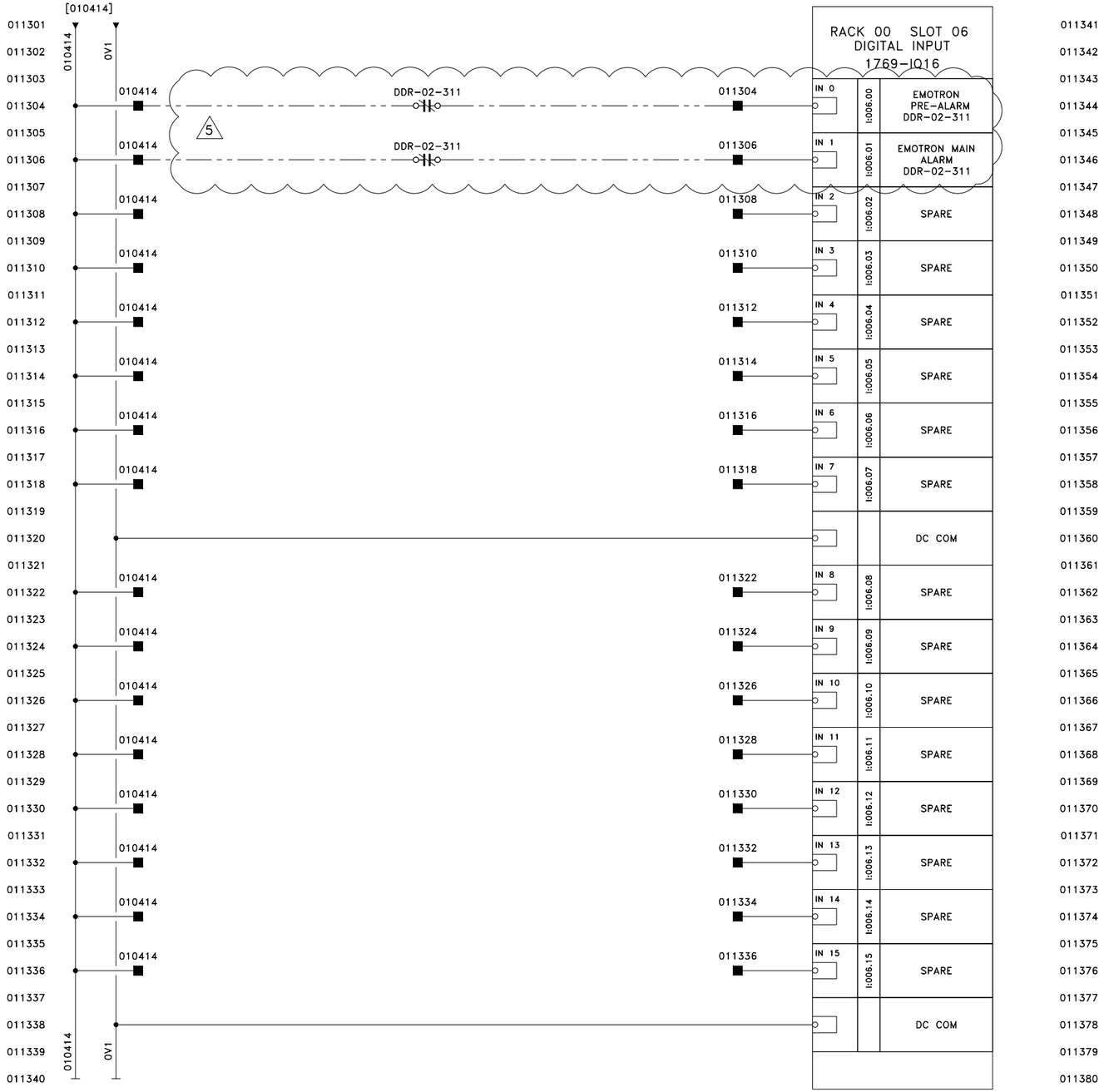


BAR = 1" AT PLOT SCALE

REF: A6798A

STD: "B" 11x17

WIRING

VEOLIA

CUSTOMER

INTERNAL WIRING

| REV | DESCRIPTION | DATE | REVD | CHKD | APVD | ECN |
|---|---|---|---|---|---|---|
| 5 | AS BUILT \|\| FIELD MODIFICATION | 2020-02-28 | SB | RA | – | – |
| 4 | AS BUILT \|\| FIELD MODIFICATION | 2019-07-29 | JC | RA | – | – |
| 3 | AS BUILT | 2019-03-27 | HZ | RA | – | – |
| 2 | FOR FABRICATION | 2019-03-19 | HZ | RA | – | – |
| 1 | FOR APPROVAL | 2019-01-03 | HZ | RA | – | – |

**CONFIDENTIALITY AND INTELLECTUAL PROPERTY NOTICE**
ALL INFORMATION CONTAINED IN THIS DOCUMENT IS THE SOLE PROPERTY OF VEOLIA WATER TECHNOLOGIES CANADA INC. AND IS PROTECTED BY ALL APPLICABLE LAWS, INCLUDING BUT NOT LIMITED TO COPYRIGHT AND OTHER INTELLECTUAL PROPERTY LAWS. THE DESIGN CONCEPTS AND INFORMATION CONTAINED HEREIN ARE PROPRIETARY TO V.W.T AND ARE SUBMITTED IN CONFIDENCE. THEY ARE NOT TRANSFERABLE. THEY MUST BE USED ONLY FOR THE PURPOSE FOR WHICH THE DOCUMENT IS EXPRESSLY SUBMITTED AND NO IMPLICIT LICENCE IS GRANTED OTHERWISE BY THE SUBMISSION OF THIS DOCUMENT. THEY ARE CONFIDENTIAL AND PRIVILEGED INFORMATION OF V.W.T. AND THEY MUST NOT BE DISCLOSED, REPRODUCED, LOANED, REMITTED OR USED IN ANY OTHER MANNER WITHOUT THE EXPRESS WRITTEN CONSENT OF V.W.T. V.W.T. ASSUMES NO RESPONSIBILITY OR LIABILITY FOR THE USE OF THIS DOCUMENT OR THE DESIGN CONCEPTS AND INFORMATION CONTAINED HEREIN FOR ANOTHER PROJECT, OR IN A MANNER THAT DOES NOT RELATE TO THE FITNESS OR PURPOSE OF THIS DOCUMENT. IN NO EVENT SHALL THIS DOCUMENT OR THE DESIGN CONCEPTS AND INFORMATION CONTAINED HEREIN BE USED IN A MANNER DETRIMENTAL TO THE INTEREST OF V.W.T. ALL COPYRIGHT, PATENT AND OTHER INTELLECTUAL PROPERTY RIGHTS ARE RESERVED. ACCEPTANCE OF THE DELIVERY OF THIS DOCUMENT CONSTITUTES AGREEMENT TO THESE TERMS AND CONDITIONS.

| | |
|---|---|
| DESIGNER | DATE |
| – | – |
| CHECKER | DATE |
| – | – |
| ENGINEER | DATE |
| – | – |
| SCALE: | N/A |

TITLE
CONTROL PANEL LCP-02-300
ELECTRICAL SCHEMATIC

CLIENT
WWTP UPGRADE
CITY OF IQALUIT

VEOLIA
VEOLIA WATER TECHNOLOGIES CANADA INC. 4105 Sartelon, Saint-Laurent, Qc, Canada. Tel: (514) 334-7230

| PROJECT | DRAWING | INTERNAL | SHEET | REV |
|---|---|---|---|---|
| 5000218036-ELD | 0001-AU-VWT | – | 13 OF 21 | 5 |

Mar 09, 2020 15:32:21 - G:\Projets A67XX\A6798A @ A6798D - VEOLIA - 5000218036 Iqaluit WWTP Upgrade\DOC\DESSIN\000-DRAWINGS\LCP-02-300\REV 5\5000218036-ELD-0001-AU-VWT-013.dwg - sbouya

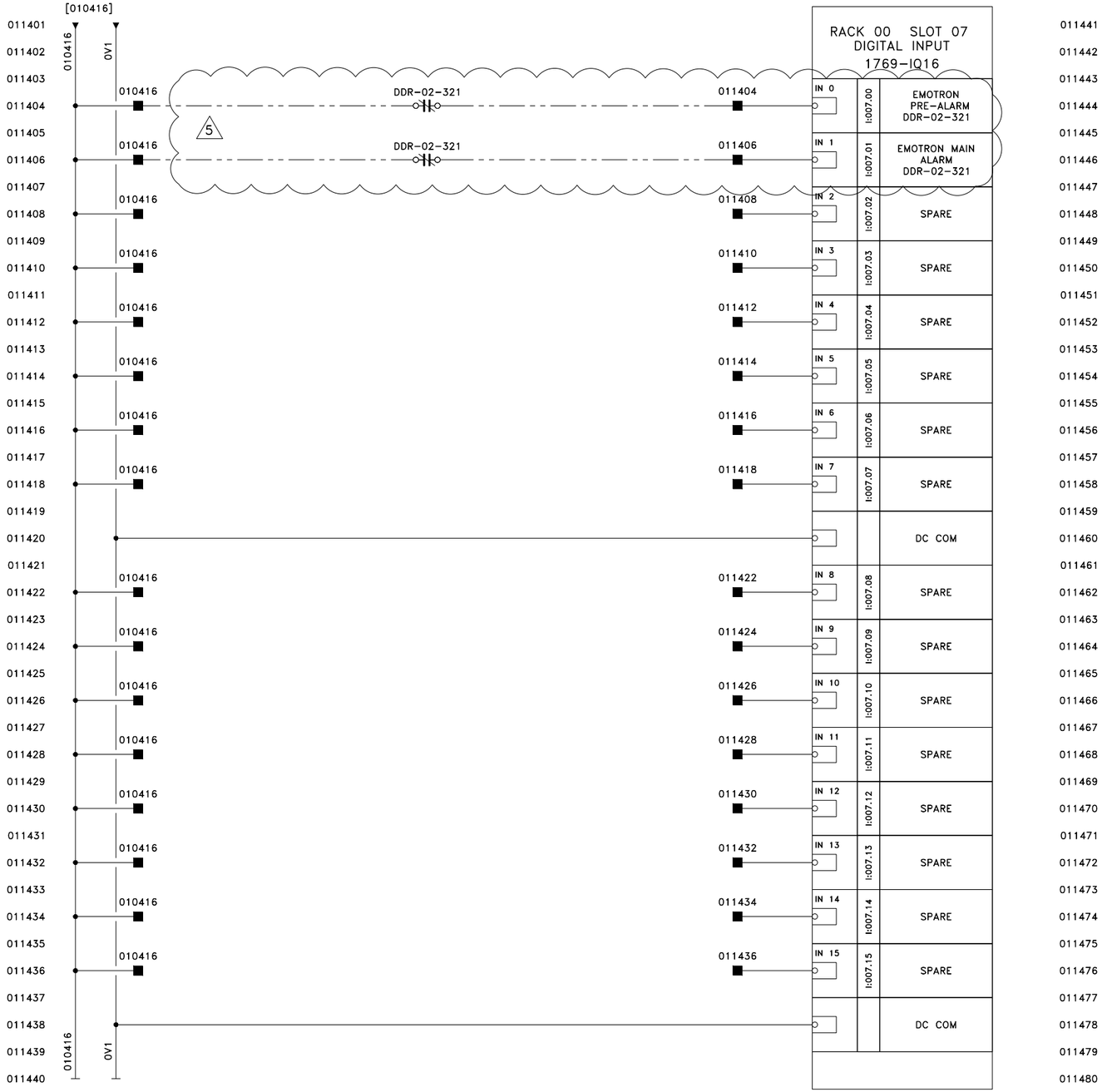


BAR = 1" AT PLOT SCALE

REF: A6798A

STD: "B" 11x17

WIRING

VEOLIA

CUSTOMER

INTERNAL WIRING

| REV | DESCRIPTION | DATE | REVD | CHKD | APVD | ECN |
|---|---|---|---|---|---|---|
| 5 | AS BUILT \|\| FIELD MODIFICATION | 2020-02-28 | SB | RA | – | – |
| 4 | AS BUILT \|\| FIELD MODIFICATION | 2019-07-29 | JC | RA | – | – |
| 3 | AS BUILT | 2019-03-27 | HZ | RA | – | – |
| 2 | FOR FABRICATION | 2019-03-19 | HZ | RA | – | – |
| 1 | FOR APPROVAL | 2019-01-03 | SG | RA | – | – |

**CONFIDENTIALITY AND INTELLECTUAL PROPERTY NOTICE**

ALL INFORMATION CONTAINED IN THIS DOCUMENT IS THE SOLE PROPERTY OF VEOLIA WATER TECHNOLOGIES CANADA INC. AND IS PROTECTED BY ALL APPLICABLE LAWS, INCLUDING BUT NOT LIMITED TO COPYRIGHT AND OTHER INTELLECTUAL PROPERTY LAWS. THE DESIGN CONCEPTS AND INFORMATION CONTAINED HEREIN ARE PROPRIETARY TO V.W.T AND ARE SUBMITTED IN CONFIDENCE. THEY ARE NOT TRANSFERABLE. THEY MUST BE USED ONLY FOR THE PURPOSE FOR WHICH THE DOCUMENT IS EXPRESSLY SUBMITTED AND NO IMPLICIT LICENCE IS GRANTED OTHERWISE BY THE SUBMISSION OF THIS DOCUMENT. THEY ARE CONFIDENTIAL AND PRIVILEGED INFORMATION OF V.W.T. AND THEY MUST NOT BE DISCLOSED, REPRODUCED, LOANED, REMITTED OR USED IN ANY OTHER MANNER WITHOUT THE EXPRESS WRITTEN CONSENT OF V.W.T. V.W.T. ASSUMES NO RESPONSIBILITY OR LIABILITY FOR THE USE OF THIS DOCUMENT OR THE DESIGN CONCEPTS AND INFORMATION CONTAINED HEREIN FOR ANOTHER PROJECT, OR IN A MANNER THAT DOES NOT RELATE TO THE FITNESS OR PURPOSE OF THIS DOCUMENT. IN NO EVENT SHALL THIS DOCUMENT OR THE DESIGN CONCEPTS AND INFORMATION CONTAINED HEREIN BE USED IN A MANNER DETRIMENTAL TO THE INTEREST OF V.W.T. ALL COPYRIGHT, PATENT AND OTHER INTELLECTUAL PROPERTY RIGHTS ARE RESERVED. ACCEPTANCE OF THE DELIVERY OF THIS DOCUMENT CONSTITUTES AGREEMENT TO THESE TERMS AND CONDITIONS.

| | |
|---|---|
| DESIGNER | DATE |
| – | – |
| CHECKER | DATE |
| – | – |
| ENGINEER | DATE |
| – | – |
| SCALE: | N/A |

TITLE

CONTROL PANEL LCP-02-300
ELECTRICAL SCHEMATIC

CLIENT

WWTP UPGRADE
CITY OF IQALUIT

VEOLIA

VEOLIA WATER TECHNOLOGIES CANADA INC. 4105 Sartelon, Saint-Laurent, Qc, Canada. Tel: (514) 334-7230

| PROJECT | DRAWING | INTERNAL | SHEET | REV |
|---|---|---|---|---|
| 5000218036-ELD | 0001-AU-VWT | – | 14 OF 21 | 5 |

Mar 09, 2020 15:32:23 – G:\Projets A67XX\A6798A @ A6798D – VEOLIA – 5000218036 Iqaluit WWTP Upgrade\DOC\DESSIN\000-DRAWINGS\LCP-02-300\REV 5\5000218036-ELD-0001-AU-VWT-014.dwg – sbouya

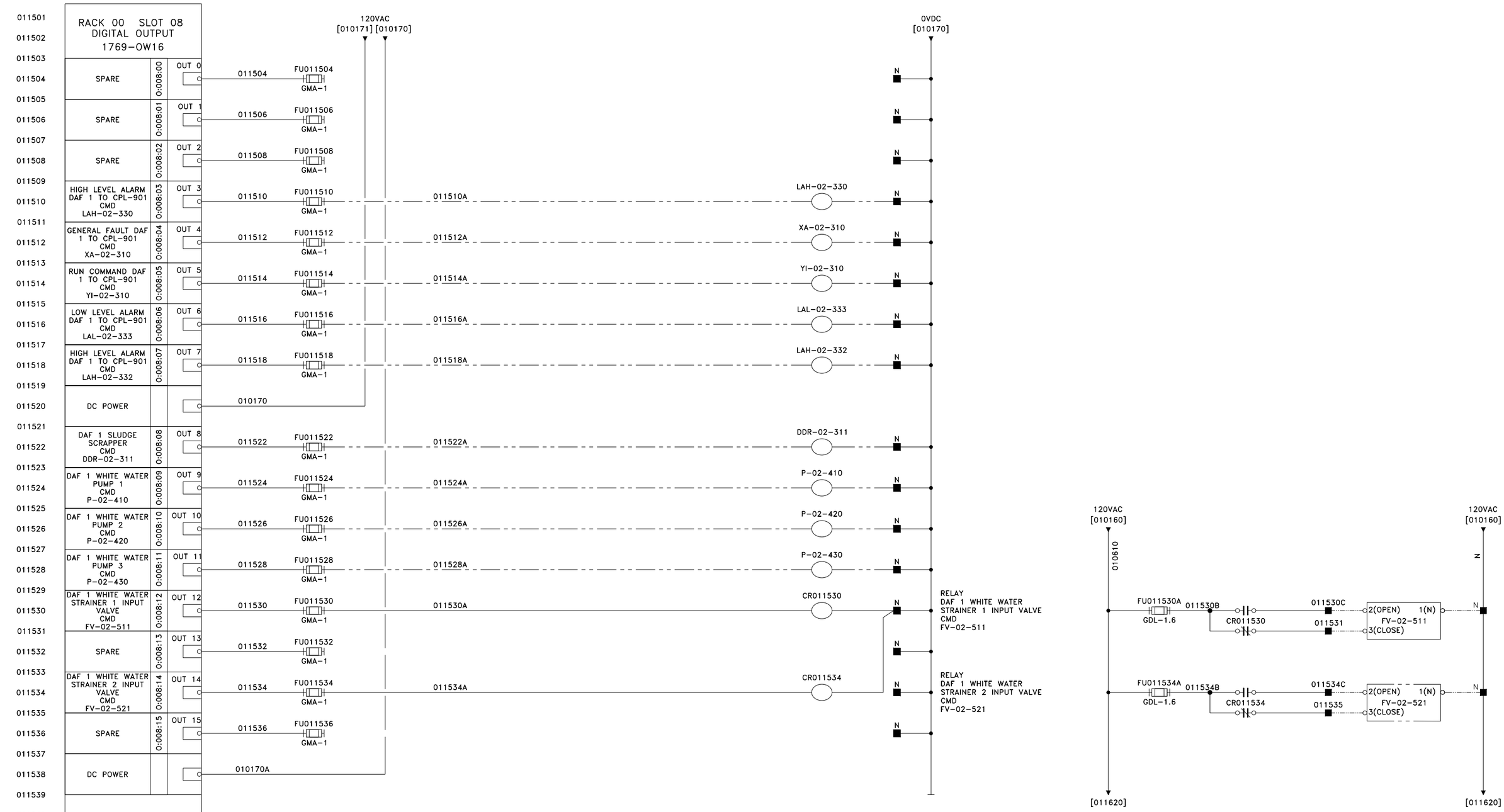


| | | | | | | |
|---|---|---|---|---|---|---|
| 5 | AS BUILT \|\| FIELD MODIFICATION | 2020-02-28 | SB | RA | – | – |
| 4 | AS BUILT \|\| FIELD MODIFICATION | 2019-07-29 | JC | RA | – | – |
| 3 | AS BUILT | 2019-03-27 | HZ | RA | – | – |
| 2 | FOR FABRICATION | 2019-03-19 | HZ | RA | – | – |
| 1 | FOR APPROVAL | 2019-01-03 | HZ | RA | – | – |
| REV | DESCRIPTION | DATE | REVD | CHKD | APVD | ECN |

WIRING

— — — — VEOLIA
———— CUSTOMER
———— INTERNAL WIRING

**CONFIDENTIALITY AND INTELLECTUAL PROPERTY NOTICE**
ALL INFORMATION CONTAINED IN THIS DOCUMENT IS THE SOLE PROPERTY OF VEOLIA WATER TECHNOLOGIES CANADA INC. AND IS PROTECTED BY ALL APPLICABLE LAWS, INCLUDING BUT NOT LIMITED TO COPYRIGHT AND OTHER INTELLECTUAL PROPERTY LAWS. THE DESIGN CONCEPTS AND INFORMATION CONTAINED HEREIN ARE PROPRIETARY TO V.W.T AND ARE SUBMITTED IN CONFIDENCE. THEY ARE NOT TRANSFERABLE. THEY MUST BE USED ONLY FOR THE PURPOSE FOR WHICH THE DOCUMENT IS EXPRESSLY SUBMITTED AND NO IMPLICIT LICENCE IS GRANTED OTHERWISE BY THE SUBMISSION OF THIS DOCUMENT. THEY ARE CONFIDENTIAL AND PRIVILEGED INFORMATION OF V.W.T. AND THEY MUST NOT BE DISCLOSED, REPRODUCED, LOANED, REMITTED OR USED IN ANY OTHER MANNER WITHOUT THE EXPRESS WRITTEN CONSENT OF V.W.T. V.W.T. ASSUMES NO RESPONSIBILITY OR LIABILITY FOR THE USE OF THIS DOCUMENT OR THE DESIGN CONCEPTS AND INFORMATION CONTAINED HEREIN FOR ANOTHER PROJECT, OR IN A MANNER THAT DOES NOT RELATE TO THE FITNESS OR PURPOSE OF THIS DOCUMENT. IN NO EVENT SHALL THIS DOCUMENT OR THE DESIGN CONCEPTS AND INFORMATION CONTAINED HEREIN BE USED IN A MANNER DETRIMENTAL TO THE INTEREST OF V.W.T. ALL COPYRIGHT, PATENT AND OTHER INTELLECTUAL PROPERTY RIGHTS ARE RESERVED. ACCEPTANCE OF THE DELIVERY OF THIS DOCUMENT CONSTITUTES AGREEMENT TO THESE TERMS AND CONDITIONS.

| | |
|---|---|
| DESIGNER | DATE |
| – | – |
| CHECKER | DATE |
| – | – |
| ENGINEER | DATE |
| – | – |
| SCALE: | N/A |

TITLE
CONTROL PANEL LCP-02-300
ELECTRICAL SCHEMATIC

CLIENT
WWTP UPGRADE
CITY OF IQALUIT

VEOLIA
VEOLIA WATER TECHNOLOGIES CANADA INC. 4105 Sartelon, Saint-Laurent, Qc, Canada. Tel: (514) 334-7230

| PROJECT / DRAWING | INTERNAL | SHEET | REV |
|---|---|---|---|
| 5000218036-ELD – 0001-AU-VWT | – | 15 OF 21 | 5 |

REF: A6798A
BAR = 1" AT PLOT SCALE
STD: "B" 11x17

Mar 09, 2020 15:32:25 – G:\Projets A67XX\A6798A @ A6798D – VEOLIA Upgrade\DOC\DESSIN\000-DRAWINGS\LCP-02-300\REV 5\5000218036-ELD-0001-AU-VWT-015.dwg – sbouya

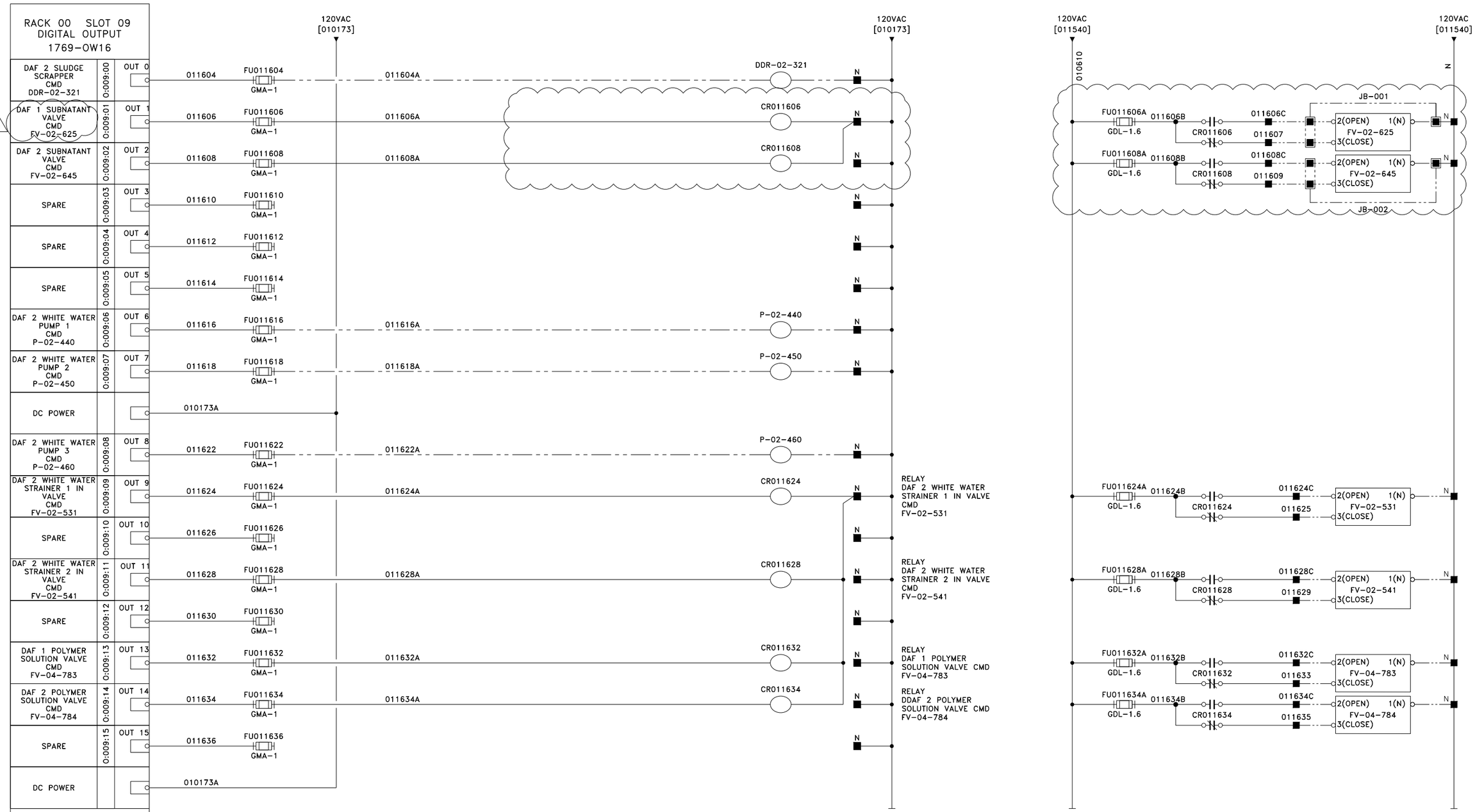


WIRING

VEOLIA

CUSTOMER

INTERNAL WIRING

| REV | DESCRIPTION | DATE | REVD | CHKD | APVD | ECN |
|---|---|---|---|---|---|---|
| 5 | AS BUILT \|\| FIELD MODIFICATION | 2020-02-28 | SB | RA | – | – |
| 4 | AS BUILT \|\| FIELD MODIFICATION | 2019-07-29 | JC | RA | – | – |
| 3 | AS BUILT | 2019-03-27 | HZ | RA | – | – |
| 2 | FOR FABRICATION | 2019-03-19 | HZ | RA | – | – |
| 1 | FOR APPROVAL | 2019-01-03 | HZ | RA | – | – |

**CONFIDENTIALITY AND INTELLECTUAL PROPERTY NOTICE**
ALL INFORMATION CONTAINED IN THIS DOCUMENT IS THE SOLE PROPERTY OF VEOLIA WATER TECHNOLOGIES CANADA INC. AND IS PROTECTED BY ALL APPLICABLE LAWS, INCLUDING BUT NOT LIMITED TO COPYRIGHT AND OTHER INTELLECTUAL PROPERTY LAWS. THE DESIGN CONCEPTS AND INFORMATION CONTAINED HEREIN ARE PROPRIETARY TO V.W.T AND ARE SUBMITTED IN CONFIDENCE. THEY ARE NOT TRANSFERABLE. THEY MUST BE USED ONLY FOR THE PURPOSE FOR WHICH THE DOCUMENT IS EXPRESSLY SUBMITTED AND NO IMPLICIT LICENCE IS GRANTED OTHERWISE BY THE SUBMISSION OF THIS DOCUMENT. THEY ARE CONFIDENTIAL AND PRIVILEGED INFORMATION OF V.W.T. AND THEY MUST NOT BE DISCLOSED, REPRODUCED, LOANED, REMITTED OR USED IN ANY OTHER MANNER WITHOUT THE EXPRESS WRITTEN CONSENT OF V.W.T. V.W.T. ASSUMES NO RESPONSIBILITY OR LIABILITY FOR THE USE OF THIS DOCUMENT OR THE DESIGN CONCEPTS AND INFORMATION CONTAINED HEREIN FOR ANOTHER PROJECT, OR IN A MANNER THAT DOES NOT RELATE TO THE FITNESS OR PURPOSE OF THIS DOCUMENT. IN NO EVENT SHALL THIS DOCUMENT OR THE DESIGN CONCEPTS AND INFORMATION CONTAINED HEREIN BE USED IN A MANNER DETRIMENTAL TO THE INTEREST OF V.W.T. ALL COPYRIGHT, PATENT AND OTHER INTELLECTUAL PROPERTY RIGHTS ARE RESERVED. ACCEPTANCE OF THE DELIVERY OF THIS DOCUMENT CONSTITUTES AGREEMENT TO THESE TERMS AND CONDITIONS.

| | | |
|---|---|---|
| DESIGNER | – | DATE – |
| CHECKER | – | DATE – |
| ENGINEER | – | DATE – |
| SCALE: | N/A | |

TITLE
CONTROL PANEL LCP-02-300
ELECTRICAL SCHEMATIC

CLIENT
WWTP UPGRADE
CITY OF IQALUIT

VEOLIA
VEOLIA WATER TECHNOLOGIES CANADA INC. 4105 Sartelon, Saint-Laurent, Qc, Canada. Tel: (514) 334-7230

| PROJECT | DRAWING | INTERNAL | SHEET | REV |
|---|---|---|---|---|
| 5000218036-ELD | 0001-AU-VWT | – | 16 OF 21 | 5 |

BAR = 1" AT PLOT SCALE
REF: A6798A
STD: "B" 11x17
Mar 09, 2020 15:32:26 - G:\Projets A67XX\A6798A @ A6798D - VEOLIA - 5000218036 Iqaluit WWTP Upgrade\DOC\DESSIN\000-DRAWINGS\LCP-02-300\REV 5\5000218036-ELD-0001-AU-VWT-016.dwg - sbouya

BAR = 1" AT PLOT SCALE
REF: 4
STD: "B" 11x17

Mar 09, 2020 15:32:28 - G:\Projets A67XX\A6798A @ A6798D - VEOLIA - 5000218036 Iqaluit WWTP Upgrade\DOC\DESSIN\000-DRAWINGS\LCP-02-300\REV 5\5000218036-ELD-0001-AU-VWT-017.dwg - sbouya

RACK 00 SLOT 10
DIGITAL OUTPUT
1769-OW16

| | | | |
|---|---|---|---|
| GENERAL ALARM LIGHT CMD ALIGHT | 0:010:00 | OUT 0 | 011704 |
| GENERAL ALARM RELAY CMD ARELAY | 0:010:01 | OUT 1 | 011706 |
| PLC E-STOP RESET CMD E_STOP_RESET | 0:010:02 | OUT 2 | 011708 |
| GENERAL FAULT DAF 2 TO CPL-901 CMD XA-02-320 | 0:010:03 | OUT 3 | 011710 |
| RUN COMMAND DAF 2 TO CPL-901 CMD YI-02-320 | 0:010:04 | OUT 4 | 011712 |
| LOW LEVEL ALARM DAF 2 TO CPL-901 CMD LAL-02-343 | 0:010:05 | OUT 5 | 011714 |
| HIGH LEVEL ALARM DAF 2 TO CPL-901 CMD LAH-02-342 | 0:010:06 | OUT 6 | 011716 |
| HIGH LEVEL ALARM DAF 2 TO CPL-901 CMD LAH-02-340 | 0:010:07 | OUT 7 | 011718 |
| DC POWER | | | 010176 |
| DAF 1 WHITE WATER STRAINER 1 OUT VALVE CMD FV-02-512 | 0:010:08 | OUT 8 | 011722 |
| DAF 1 WHITE WATER STRAINER 2 OUT VALVE CMD FV-02-522 | 0:010:09 | OUT 9 | 011724 |
| DAF 2 WHITE WATER STRAINER 1 OUT VALVE CMD FV-02-532 | 0:010:10 | OUT 10 | 011726 |
| DAF 2 WHITE WATER STRAINER 2 OUT VALVE CMD FV-02-542 | 0:010:11 | OUT 11 | 011728 |
| SPARE | 0:010:12 | OUT 12 | 011730 |
| SPARE | 0:010:13 | OUT 13 | 011732 |
| SPARE | 0:010:14 | OUT 14 | 011734 |
| SPARE | 0:010:15 | OUT 15 | 011736 |
| DC POWER | | | 010319A |

120VAC [010177] 120VAC UPS [010319]

120VAC [010176]

011704 FU011704 GMA-1 011704A — IL011704 (R) — N

011706 FU011706 GMA-1 011706A — CR011706 — N — [011706]

CR011706 011706B / 011708B

011708 FU011708 GMA-1 011708A — CR011708 — N — [010532]

011710 FU011710 GMA-1 011710A — XA-02-320 — N

011712 FU011712 GMA-1 011712A — YI-02-320 — N

011714 FU011714 GMA-1 011714A — LAL-02-343 — N

011716 FU011716 GMA-1 011716A — LAH-02-342 — N

011718 FU011718 GMA-1 011718A — LAH-02-340 — N

N1 UPS [010319]

011722 FU011722 GMA-1 011722A — CR011722 — N1 — RELAY DAF 1 WHITE WATER STRAINER 1 OUT VALVE CMD FV-02-512

011724 FU011724 GMA-1 011724A — CR011724 — N1 — RELAY DAF 1 WHITE WATER STRAINER 2 OUT VALVE CMD FV-02-522

011726 FU011726 GMA-1 011726A — CR011726 — N1 — RELAY DAF 2 WHITE WATER STRAINER 1 OUT VALVE CMD FV-02-532

011728 FU011728 GMA-1 011728A — CR011728 — N1 — RELAY DAF 2 WHITE WATER STRAINER 2 OUT VALVE CMD FV-02-542

120VAC UPS [010325] — 010325

FU011722A GDL-2 011722B CR011722 011722C 011723 — 2(OPEN) 1(N) 3(CLOSE) FV-02-512 — N1

FU011724A GDL-2 011724B CR011724 011724C 011725 — 2(OPEN) 1(N) 3(CLOSE) FV-02-522 — N1

FU011726A GDL-2 011726B CR011726 011726C 011727 — 2(OPEN) 1(N) 3(CLOSE) FV-02-532 — N1

FU011728A GDL-2 011728B CR011728 011728C 011729 — 2(OPEN) 1(N) 3(CLOSE) FV-02-542 — N1

N1 UPS [010325] — N1

WIRING
VEOLIA
CUSTOMER
INTERNAL WIRING

| REV | DESCRIPTION | DATE | REVD | CHKD | APVD | ECN |
|---|---|---|---|---|---|---|
| 5 | AS BUILT \|\| FIELD MODIFICATION | 2020-02-28 | SB | RA | – | – |
| 4 | AS BUILT \|\| FIELD MODIFICATION | 2019-07-29 | JC | RA | – | – |
| 3 | AS BUILT | 2019-03-27 | HZ | RA | – | – |
| 2 | FOR FABRICATION | 2019-03-19 | HZ | RA | – | – |
| 1 | FOR APPROVAL | 2019-01-03 | HZ | RA | – | – |

CONFIDENTIALITY AND INTELLECTUAL PROPERTY NOTICE
ALL INFORMATION CONTAINED IN THIS DOCUMENT IS THE SOLE PROPERTY OF VEOLIA WATER TECHNOLOGIES CANADA INC. AND IS PROTECTED BY ALL APPLICABLE LAWS, INCLUDING BUT NOT LIMITED TO COPYRIGHT AND OTHER INTELLECTUAL PROPERTY LAWS. THE DESIGN CONCEPTS AND INFORMATION CONTAINED HEREIN ARE PROPRIETARY TO V.W.T AND ARE SUBMITTED IN CONFIDENCE. THEY ARE NOT TRANSFERABLE. THEY MUST BE USED ONLY FOR THE PURPOSE FOR WHICH THE DOCUMENT IS EXPRESSLY SUBMITTED AND NO IMPLICIT LICENCE IS GRANTED OTHERWISE BY THE SUBMISSION OF THIS DOCUMENT. THEY ARE CONFIDENTIAL AND PRIVILEGED INFORMATION OF V.W.T. AND THEY MUST NOT BE DISCLOSED, REPRODUCED, LOANED, REMITTED OR USED IN ANY OTHER MANNER WITHOUT THE EXPRESS WRITTEN CONSENT OF V.W.T. V.W.T. ASSUMES NO RESPONSIBILITY OR LIABILITY FOR THE USE OF THIS DOCUMENT OR THE DESIGN CONCEPTS AND INFORMATION CONTAINED HEREIN FOR ANOTHER PROJECT, OR IN A MANNER THAT DOES NOT RELATE TO THE FITNESS OR PURPOSE OF THIS DOCUMENT. IN NO EVENT SHALL THIS DOCUMENT OR THE DESIGN CONCEPTS AND INFORMATION CONTAINED HEREIN BE USED IN A MANNER DETRIMENTAL TO THE INTEREST OF V.W.T. ALL COPYRIGHT, PATENT AND OTHER INTELLECTUAL PROPERTY RIGHTS ARE RESERVED. ACCEPTANCE OF THE DELIVERY OF THIS DOCUMENT CONSTITUTES AGREEMENT TO THESE TERMS AND CONDITIONS.

| | |
|---|---|
| DESIGNER | DATE |
| – | – |
| CHECKER | DATE |
| – | – |
| ENGINEER | DATE |
| – | – |
| SCALE: | N/A |

TITLE
CONTROL PANEL LCP-02-300
ELECTRICAL SCHEMATIC

CLIENT
WWTP UPGRADE
CITY OF IQALUIT

VEOLIA
VEOLIA WATER TECHNOLOGIES CANADA INC. 4105 Sartelon, Saint-Laurent, Qc, Canada. Tel: (514) 334-7230

| PROJECT DRAWING | INTERNAL | SHEET | REV |
|---|---|---|---|
| 5000218036-ELD – 0001-AU-VWT | – | 17 OF 21 | 5 |

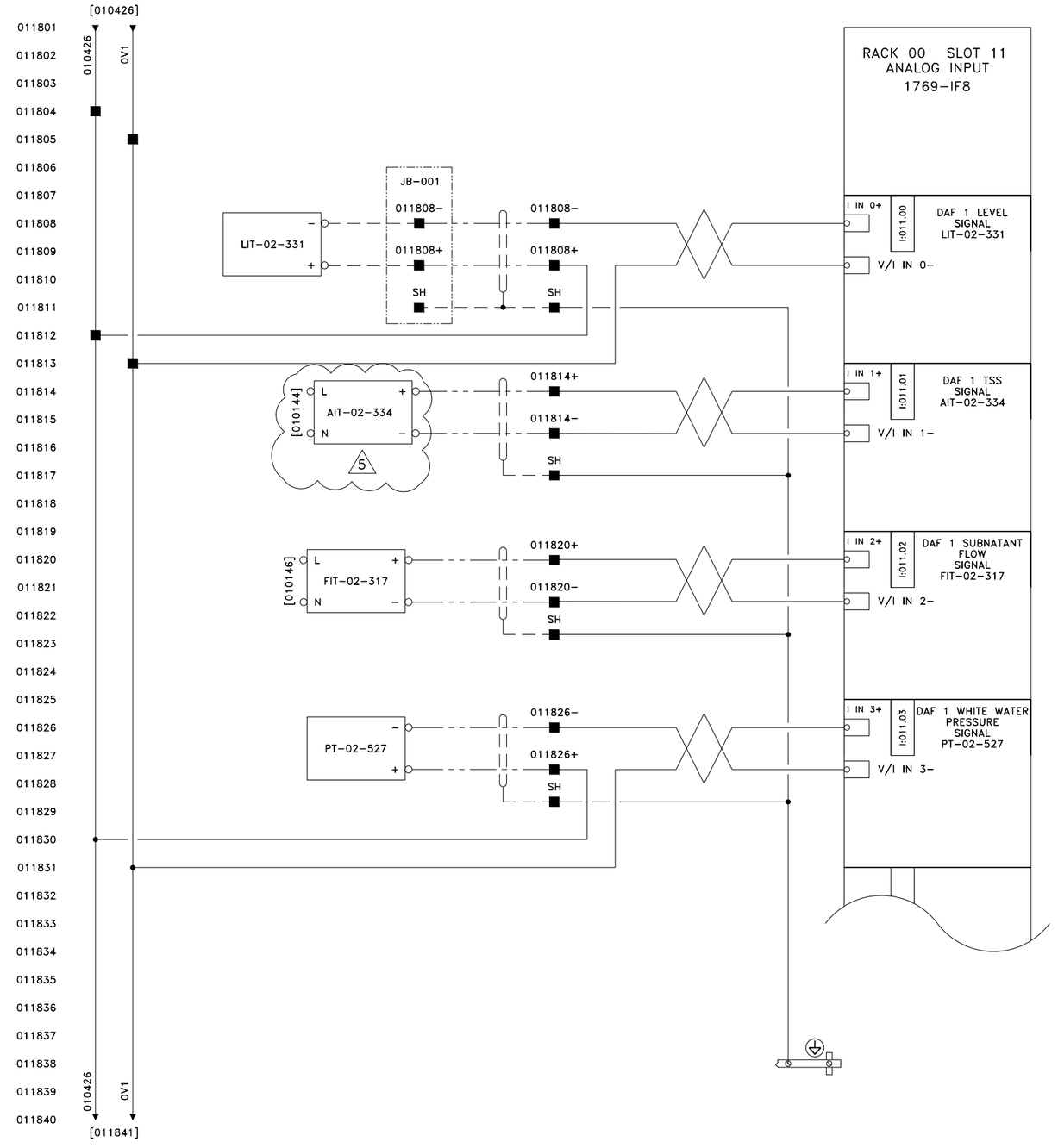


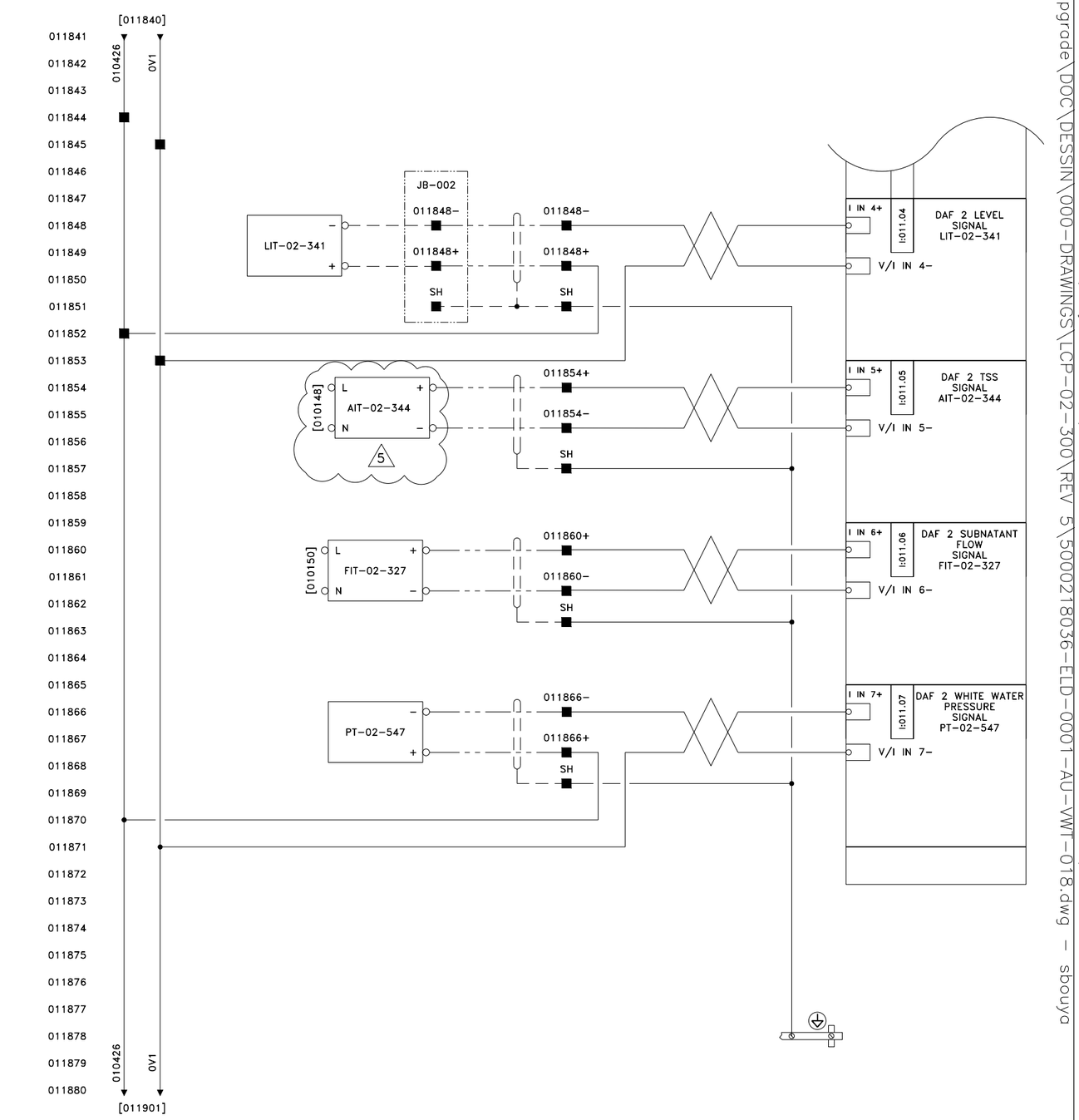


BAR = 1" AT PLOT SCALE

REF: A6798A

STD: "B" 11x17

WIRING

- VEOLIA
- CUSTOMER
- INTERNAL WIRING

| REV | DESCRIPTION | DATE | REVD | CHKD | APVD | ECN |
|---|---|---|---|---|---|---|
| 5 | AS BUILT \|\| FIELD MODIFICATION | 2020-02-28 | SB | RA | – | – |
| 4 | AS BUILT \|\| FIELD MODIFICATION | 2019-07-29 | JC | RA | – | – |
| 3 | AS BUILT | 2019-03-27 | HZ | RA | – | – |
| 2 | FOR FABRICATION | 2019-03-19 | HZ | RA | – | – |
| 1 | FOR APPROVAL | 2019-01-03 | HZ | RA | – | – |


**CONFIDENTIALITY AND INTELLECTUAL PROPERTY NOTICE**

ALL INFORMATION CONTAINED IN THIS DOCUMENT IS THE SOLE PROPERTY OF VEOLIA WATER TECHNOLOGIES CANADA INC. AND IS PROTECTED BY ALL APPLICABLE LAWS, INCLUDING BUT NOT LIMITED TO COPYRIGHT AND OTHER INTELLECTUAL PROPERTY LAWS. THE DESIGN CONCEPTS AND INFORMATION CONTAINED HEREIN ARE PROPRIETARY TO V.W.T. AND ARE SUBMITTED IN CONFIDENCE. THEY ARE NOT TRANSFERABLE. THEY MUST BE USED ONLY FOR THE PURPOSE FOR WHICH THE DOCUMENT IS EXPRESSLY SUBMITTED AND NO IMPLICIT LICENCE IS GRANTED OTHERWISE BY THE SUBMISSION OF THIS DOCUMENT. THEY ARE CONFIDENTIAL AND PRIVILEGED INFORMATION OF V.W.T. AND THEY MUST NOT BE DISCLOSED, REPRODUCED, LOANED, REMITTED OR USED IN ANY OTHER MANNER WITHOUT THE EXPRESS WRITTEN CONSENT OF V.W.T. V.W.T. ASSUMES NO RESPONSIBILITY OR LIABILITY FOR THE USE OF THIS DOCUMENT OR THE DESIGN CONCEPTS AND INFORMATION CONTAINED HEREIN FOR ANOTHER PROJECT, OR IN A MANNER THAT DOES NOT RELATE TO THE FITNESS OR PURPOSE OF THIS DOCUMENT. IN NO EVENT SHALL THIS DOCUMENT OR THE DESIGN CONCEPTS AND INFORMATION CONTAINED HEREIN BE USED IN A MANNER DETRIMENTAL TO THE INTEREST OF V.W.T. ALL COPYRIGHT, PATENT AND OTHER INTELLECTUAL PROPERTY RIGHTS ARE RESERVED. ACCEPTANCE OF THE DELIVERY OF THIS DOCUMENT CONSTITUTES AGREEMENT TO THESE TERMS AND CONDITIONS.


| | |
|---|---|
| DESIGNER | DATE |
| – | – |
| CHECKER | DATE |
| – | – |
| ENGINEER | DATE |
| – | – |
| SCALE: | N/A |

TITLE

CONTROL PANEL LCP-02-300
ELECTRICAL SCHEMATIC

CLIENT

WWTP UPGRADE
CITY OF IQALUIT

VEOLIA


VEOLIA WATER TECHNOLOGIES CANADA INC. 4105 Sartelon, Saint-Laurent, Qc, Canada. Tel: (514) 334-7230


| PROJECT DRAWING | INTERNAL | SHEET | REV |
|---|---|---|---|
| 5000218036-ELD – 0001-AU-VWT | – | 18 OF 21 | 5 |


Mar 09, 2020 15:32:30 – G:\Projets A67XX\A6798A @ A6798D – VEOLIA – 5000218036 Iqaluit WWTP Upgrade\DOC\DESSIN\000-DRAWINGS\LCP-02-300\REV 5\5000218036-ELD-0001-AU-VWT-018.dwg – sbouya

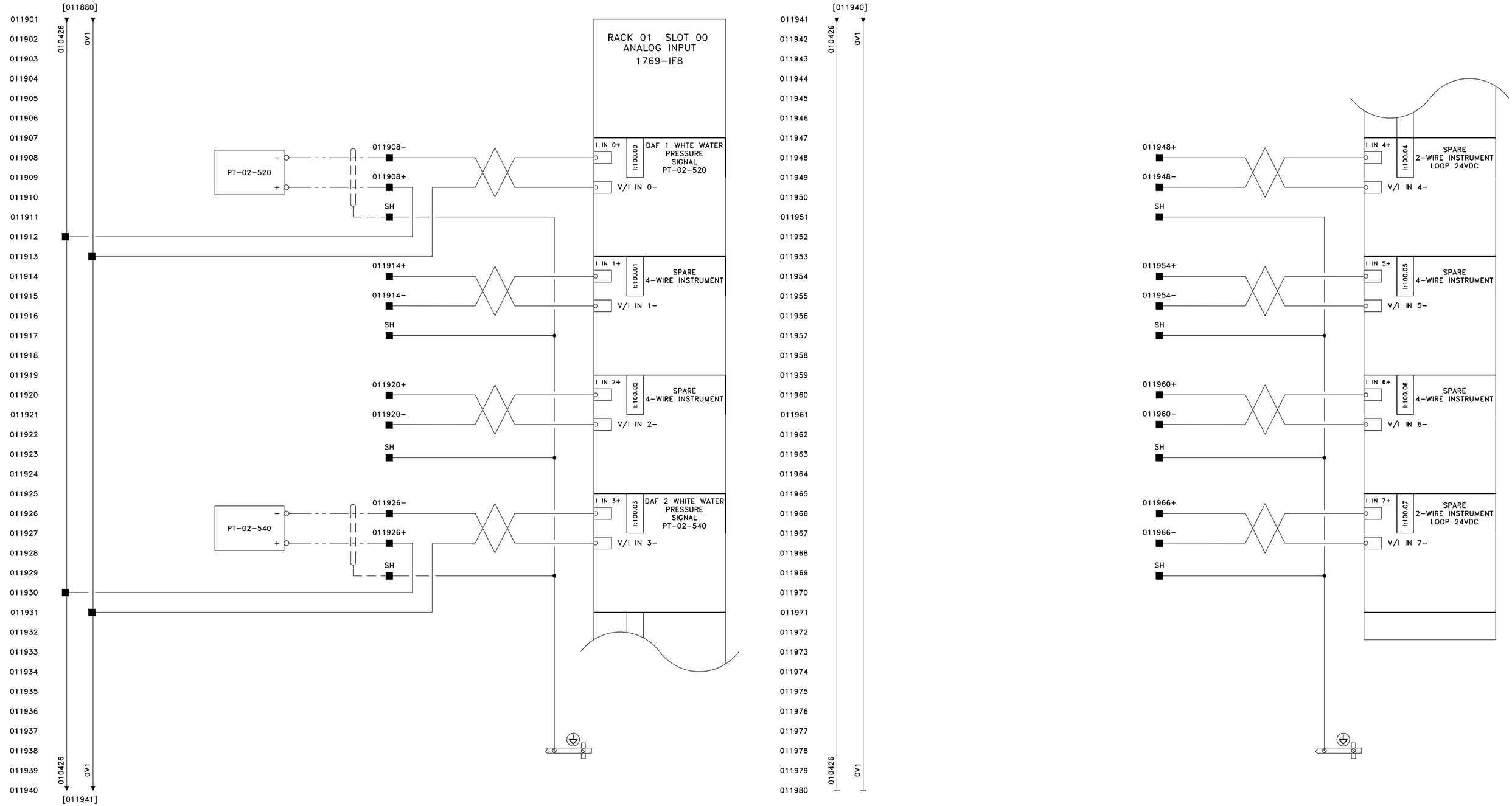


BAR = 1" AT PLOT SCALE

REF: A6798A

STD: "B" 11x17

WIRING

- VEOLIA
- CUSTOMER
- INTERNAL WIRING

| REV | DESCRIPTION | DATE | REVD | CHKD | APVD | ECN |
|---|---|---|---|---|---|---|
| 5 | AS BUILT \|\| FIELD MODIFICATION | 2020-02-28 | SB | RA | – | – |
| 4 | AS BUILT \|\| FIELD MODIFICATION | 2019-07-29 | JC | RA | – | – |
| 3 | AS BUILT | 2019-03-27 | HZ | RA | – | – |
| 2 | FOR FABRICATION | 2019-03-19 | HZ | RA | – | – |
| 1 | FOR APPROVAL | 2019-01-03 | HZ | RA | – | – |

**CONFIDENTIALITY AND INTELLECTUAL PROPERTY NOTICE**
ALL INFORMATION CONTAINED IN THIS DOCUMENT IS THE SOLE PROPERTY OF VEOLIA WATER TECHNOLOGIES CANADA INC. AND IS PROTECTED BY ALL APPLICABLE LAWS, INCLUDING BUT NOT LIMITED TO COPYRIGHT AND OTHER INTELLECTUAL PROPERTY LAWS. THE DESIGN CONCEPTS AND INFORMATION CONTAINED HEREIN ARE PROPRIETARY TO V.W.T AND ARE SUBMITTED IN CONFIDENCE. THEY ARE NOT TRANSFERABLE. THEY MUST BE USED ONLY FOR THE PURPOSE FOR WHICH THE DOCUMENT IS EXPRESSLY SUBMITTED AND NO IMPLICIT LICENCE IS GRANTED OTHERWISE BY THE SUBMISSION OF THIS DOCUMENT. THEY ARE CONFIDENTIAL AND PRIVILEGED INFORMATION OF V.W.T. AND THEY MUST NOT BE DISCLOSED, REPRODUCED, LOANED, REMITTED OR USED IN ANY OTHER MANNER WITHOUT THE EXPRESS WRITTEN CONSENT OF V.W.T. V.W.T. ASSUMES NO RESPONSIBILITY OR LIABILITY FOR THE USE OF THIS DOCUMENT OR THE DESIGN CONCEPTS AND INFORMATION CONTAINED HEREIN FOR ANOTHER PROJECT, OR IN A MANNER THAT DOES NOT RELATE TO THE FITNESS OR PURPOSE OF THIS DOCUMENT. IN NO EVENT SHALL THIS DOCUMENT OR THE DESIGN CONCEPTS AND INFORMATION CONTAINED HEREIN BE USED IN A MANNER DETRIMENTAL TO THE INTEREST OF V.W.T. ALL COPYRIGHT, PATENT AND OTHER INTELLECTUAL PROPERTY RIGHTS ARE RESERVED. ACCEPTANCE OF THE DELIVERY OF THIS DOCUMENT CONSTITUTES AGREEMENT TO THESE TERMS AND CONDITIONS.

| | |
|---|---|
| DESIGNER | DATE |
| – | – |
| CHECKER | DATE |
| – | – |
| ENGINEER | DATE |
| – | – |
| SCALE: | N/A |

TITLE
CONTROL PANEL LCP-02-300
ELECTRICAL SCHEMATIC

CLIENT
WWTP UPGRADE
CITY OF IQALUIT

VEOLIA
VEOLIA WATER TECHNOLOGIES CANADA INC. 4105 Sartelon, Saint-Laurent, Qc, Canada. Tel: (514) 334-7230

| PROJECT | DRAWING | INTERNAL | SHEET | REV |
|---|---|---|---|---|
| 5000218036-ELD | 0001-AU-VWT | – | 19 OF 21 | 5 |

Mar 09, 2020 15:32:31 – G:\Projets A67XX\A6798A @ A6798D – VEOLIA – 5000218036 Iqaluit WWTP Upgrade\DOC\DESSIN\000-DRAWINGS\LCP-02-300\REV 5\5000218036-ELD-0001-AU-VWT-019.dwg – sbouya

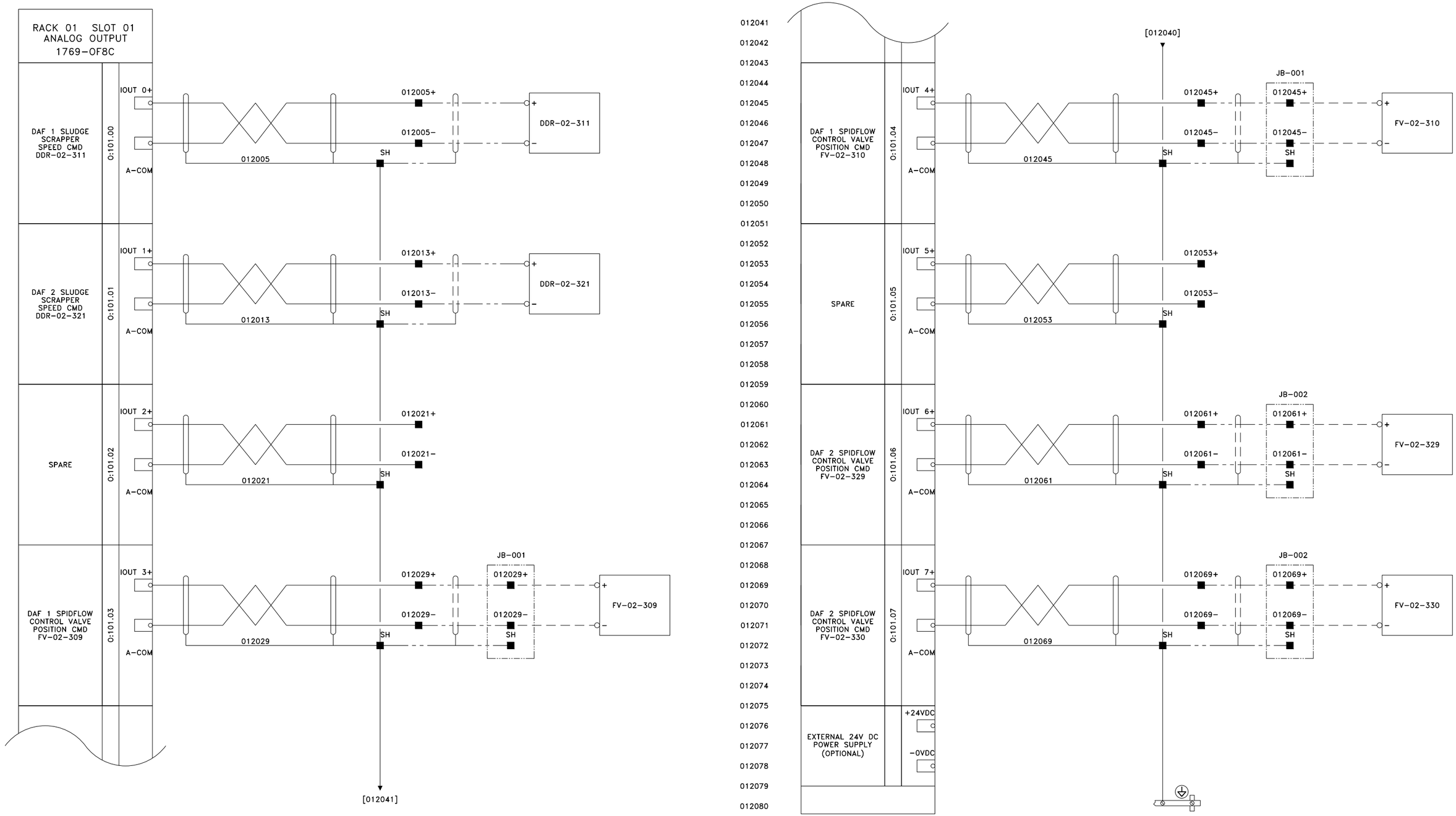


BAR = 1" AT PLOT SCALE

REF: A6798A

STD: "B" 11x17

WIRING

VEOLIA

CUSTOMER

INTERNAL WIRING

| REV | DESCRIPTION | DATE | REVD | CHKD | APVD | ECN |
|---|---|---|---|---|---|---|
| 5 | AS BUILT \|\| FIELD MODIFICATION | 2020-02-28 | SB | RA | – | – |
| 4 | AS BUILT \|\| FIELD MODIFICATION | 2019-07-29 | JC | RA | – | – |
| 3 | AS BUILT | 2019-03-27 | HZ | RA | – | – |
| 2 | FOR FABRICATION | 2019-03-19 | HZ | RA | – | – |
| 1 | FOR APPROVAL | 2019-01-03 | HZ | RA | – | – |

**CONFIDENTIALITY AND INTELLECTUAL PROPERTY NOTICE**
ALL INFORMATION CONTAINED IN THIS DOCUMENT IS THE SOLE PROPERTY OF VEOLIA WATER TECHNOLOGIES CANADA INC. AND IS PROTCTED BY ALL APPLICABLE LAWS, INCLUDING BUT NOT LIMITED TO COPYRIGHT AND OTHER INTELLECTUAL PROPERTY LAWS. THE DESIGN CONCEPTS AND INFORMATION CONTAINED HEREIN ARE PROPRIETARY TO V.W.T AND ARE SUBMITTED IN CONFIDENCE. THEY ARE NOT TRANSFERABLE. THEY MUST BE USED ONLY FOR THE PURPOSE FOR WHICH THE DOCUMENT IS EXPRESSLY SUBMITTED AND NO IMPLICIT LICENCE IS GRANTED OTHERWISE BY THE SUBMISSION OF THIS DOCUMENT. THEY ARE CONFIDENTIAL AND PRIVILEGED INFORMATION OF V.W.T. AND THEY MUST NOT BE DISCLOSED, REPRODUCED, LOANED, REMITTED OR USED IN ANY OTHER MANNER WITHOUT THE EXPRESS WRITTEN CONSENT OF V.W.T. V.W.T. ASSUMES NO RESPONSIBILITY OR LIABILITY FOR THE USE OF THIS DOCUMENT OR THE DESIGN CONCEPTS AND INFORMATION CONTAINED HEREIN FOR ANOTHER PROJECT, OR IN A MANNER THAT DOES NOT RELATE TO THE FITNESS OR PURPOSE OF THIS DOCUMENT. IN NO EVENT SHALL THIS DOCUMENT OR THE DESIGN CONCEPTS AND INFORMATION CONTAINED HEREIN BE USED IN A MANNER DETRIMENTAL TO THE INTEREST OF V.W.T. ALL COPYRIGHT, PATENT AND OTHER INTELLECTUAL PROPERTY RIGHTS ARE RESERVED. ACCEPTANCE OF THE DELIVERY OF THIS DOCUMENT CONSTITUTES AGREEMENT TO THESE TERMS AND CONDITIONS.

| | |
|---|---|
| DESIGNER | DATE – |
| CHECKER | DATE – |
| ENGINEER | DATE – |
| SCALE: | N/A |

TITLE
CONTROL PANEL LCP-02-300
ELECTRICAL SCHEMATIC

CLIENT
WWTP UPGRADE
CITY OF IQALUIT

VEOLIA
VEOLIA WATER TECHNOLOGIES CANADA INC. 4105 Sartelon, Saint-Laurent, Qc, Canada. Tel: (514) 334-7230

| PROJECT | DRAWING | INTERNAL | SHEET | REV |
|---|---|---|---|---|
| 5000218036-ELD | 0001-AU-VWT | – | 20 OF 21 | 5 |

Mar 09, 2020 15:32:33 - G:\Projets A67XX\A6798A @ A6798D - VEOLIA - 5000218036 Iqaluit WWTP Upgrade\DOC\DESSIN\000-DRAWINGS\LCP-02-300\REV 5\5000218036-ELD-0001-AU-VWT-020.dwg - sbouya

BAR = 1" AT PLOT SCALE
REF: A6798A
STD: "B" 11x17

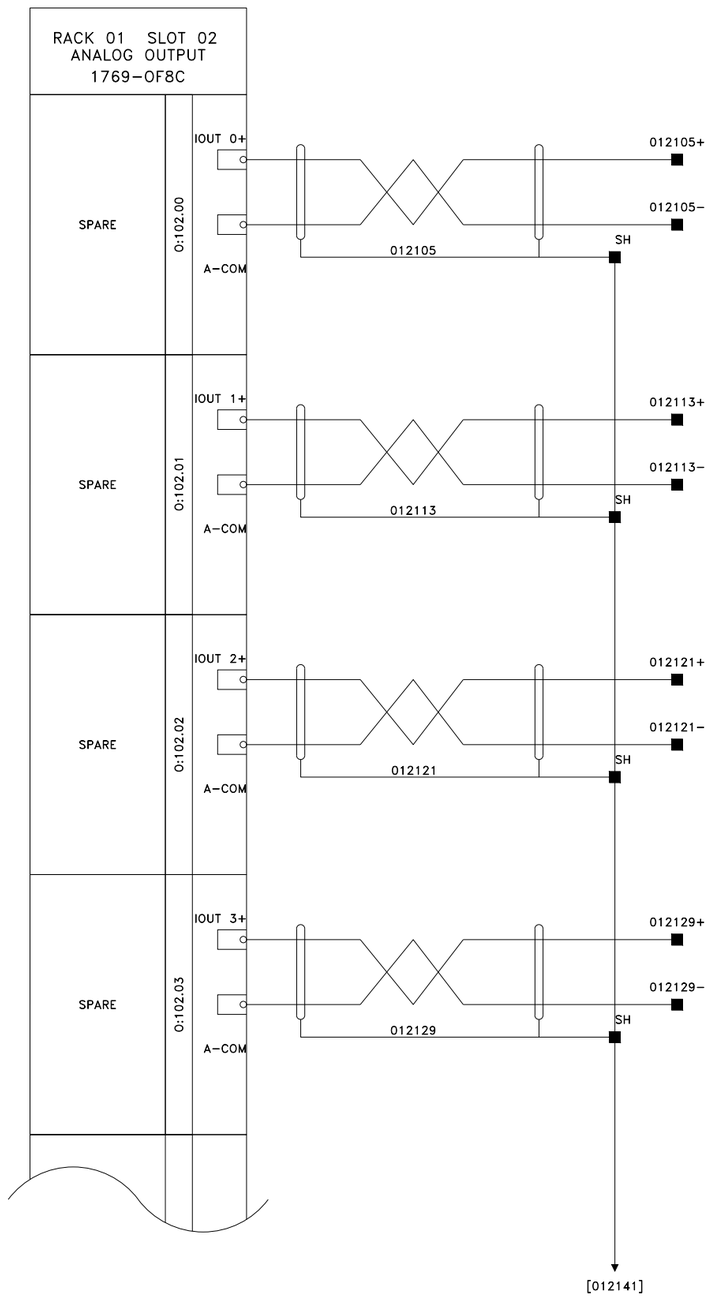


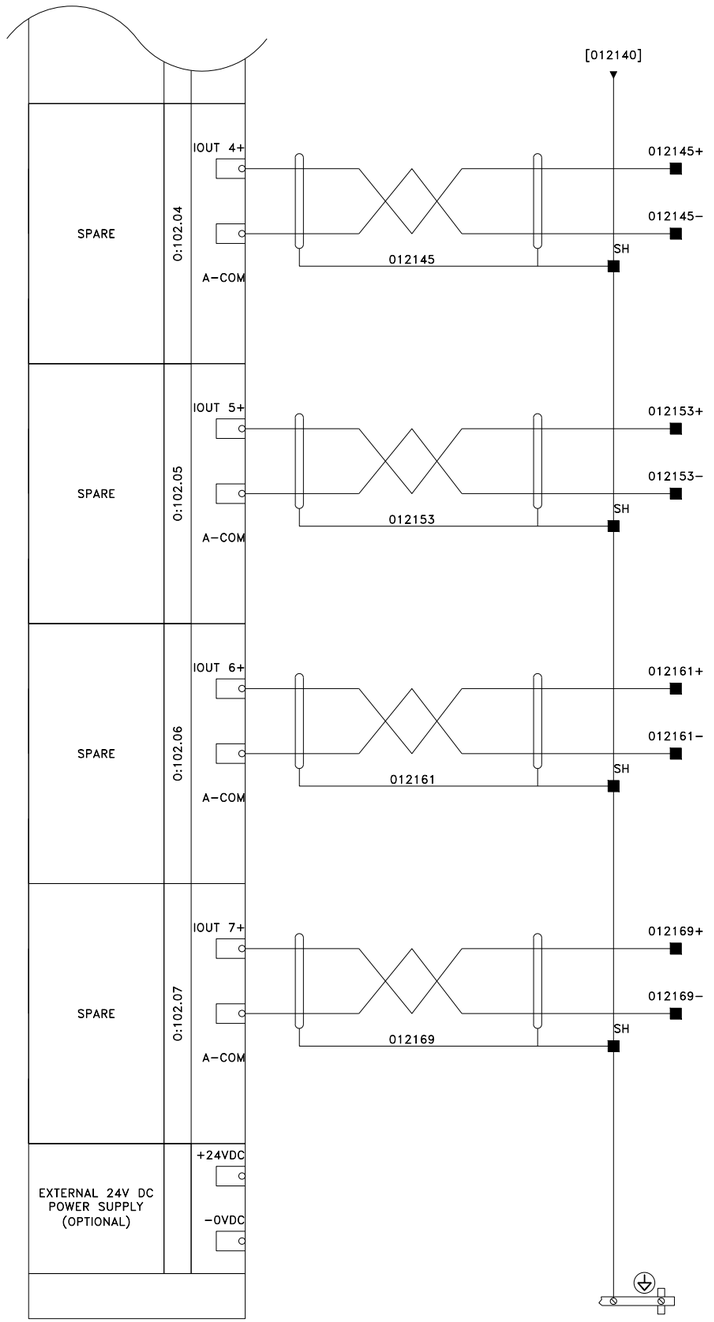


WIRING

— — — — VEOLIA
— - - - — CUSTOMER
——— INTERNAL WIRING

| REV | DESCRIPTION | DATE | REVD | CHKD | APVD | ECN |
|---|---|---|---|---|---|---|
| 5 | AS BUILT \|\| FIELD MODIFICATION | 2020-02-28 | SB | RA | – | – |
| 4 | AS BUILT \|\| FIELD MODIFICATION | 2019-07-29 | JC | RA | – | – |
| 3 | AS BUILT | 2019-03-27 | HZ | RA | – | – |
| 2 | FOR FABRICATION | 2019-03-19 | HZ | RA | – | – |
| 1 | FOR APPROVAL | 2019-01-03 | HZ | RA | – | – |

**CONFIDENTIALITY AND INTELLECTUAL PROPERTY NOTICE**
ALL INFORMATION CONTAINED IN THIS DOCUMENT IS THE SOLE PROPERTY OF VEOLIA WATER TECHNOLOGIES CANADA INC. AND IS PROTECTED BY ALL APPLICABLE LAWS, INCLUDING BUT NOT LIMITED TO COPYRIGHT AND OTHER INTELLECTUAL PROPERTY LAWS. THE DESIGN CONCEPTS AND INFORMATION CONTAINED HEREIN ARE PROPRIETARY TO V.W.T AND ARE SUBMITTED IN CONFIDENCE. THEY ARE NOT TRANSFERABLE. THEY MUST BE USED ONLY FOR THE PURPOSE FOR WHICH THE DOCUMENT IS EXPRESSLY SUBMITTED AND NO IMPLICIT LICENCE IS GRANTED OTHERWISE BY THE SUBMISSION OF THIS DOCUMENT. THEY ARE CONFIDENTIAL AND PRIVILEGED INFORMATION OF V.W.T. AND THEY MUST NOT BE DISCLOSED, REPRODUCED, LOANED, REMITTED OR USED IN ANY OTHER MANNER WITHOUT THE EXPRESS WRITTEN CONSENT OF V.W.T. V.W.T. ASSUMES NO RESPONSIBILITY OR LIABILITY FOR THE USE OF THIS DOCUMENT OR THE DESIGN CONCEPTS AND INFORMATION CONTAINED HEREIN FOR ANOTHER PROJECT, OR IN A MANNER THAT DOES NOT RELATE TO THE FITNESS OR PURPOSE OF THIS DOCUMENT. IN NO EVENT SHALL THIS DOCUMENT OR THE DESIGN CONCEPTS AND INFORMATION CONTAINED HEREIN BE USED IN A MANNER DETRIMENTAL TO THE INTEREST OF V.W.T. ALL COPYRIGHT, PATENT AND OTHER INTELLECTUAL PROPERTY RIGHTS ARE RESERVED. ACCEPTANCE OF THE DELIVERY OF THIS DOCUMENT CONSTITUTES AGREEMENT TO THESE TERMS AND CONDITIONS.

| | |
|---|---|
| DESIGNER | DATE |
| – | – |
| CHECKER | DATE |
| – | – |
| ENGINEER | DATE |
| – | – |
| SCALE: | N/A |

TITLE
CONTROL PANEL LCP-02-300
ELECTRICAL SCHEMATIC

CLIENT
WWTP UPGRADE
CITY OF IQALUIT

VEOLIA
VEOLIA WATER TECHNOLOGIES CANADA INC. 4105 Sartelon, Saint-Laurent, Qc, Canada. Tel: (514) 334-7230

| PROJECT DRAWING | INTERNAL | SHEET | REV |
|---|---|---|---|
| 5000218036-ELD – 0001-AU-VWT | – | 21 OF 21 | 5 |

Mar 09, 2020 15:32:35 – G:\Projets A67XX\A6798A @ A6798D – VEOLIA – 5000218036 Iqaluit WWTP Upgrade\DOC\DESSIN\000-DRAWINGS\LCP-02-300\REV 5\5000218036-ELD-0001-AU-VWT-021.dwg – sbouya

BAR = 1" AT PLOT SCALE
REF: A6798A
STD: "B" 11x17

Mar 09, 2020 15:32:36 - G:\Projets A67XX\A6798A @ A6798D - VEOLIA - 5000218036 Iqaluit WWTP Upgrade\DOC\DESSIN\000-DRAWINGS\LCP-02-300\REV 5\5000218036-EID-0001-AU-VWT-001.dwg - sbouya

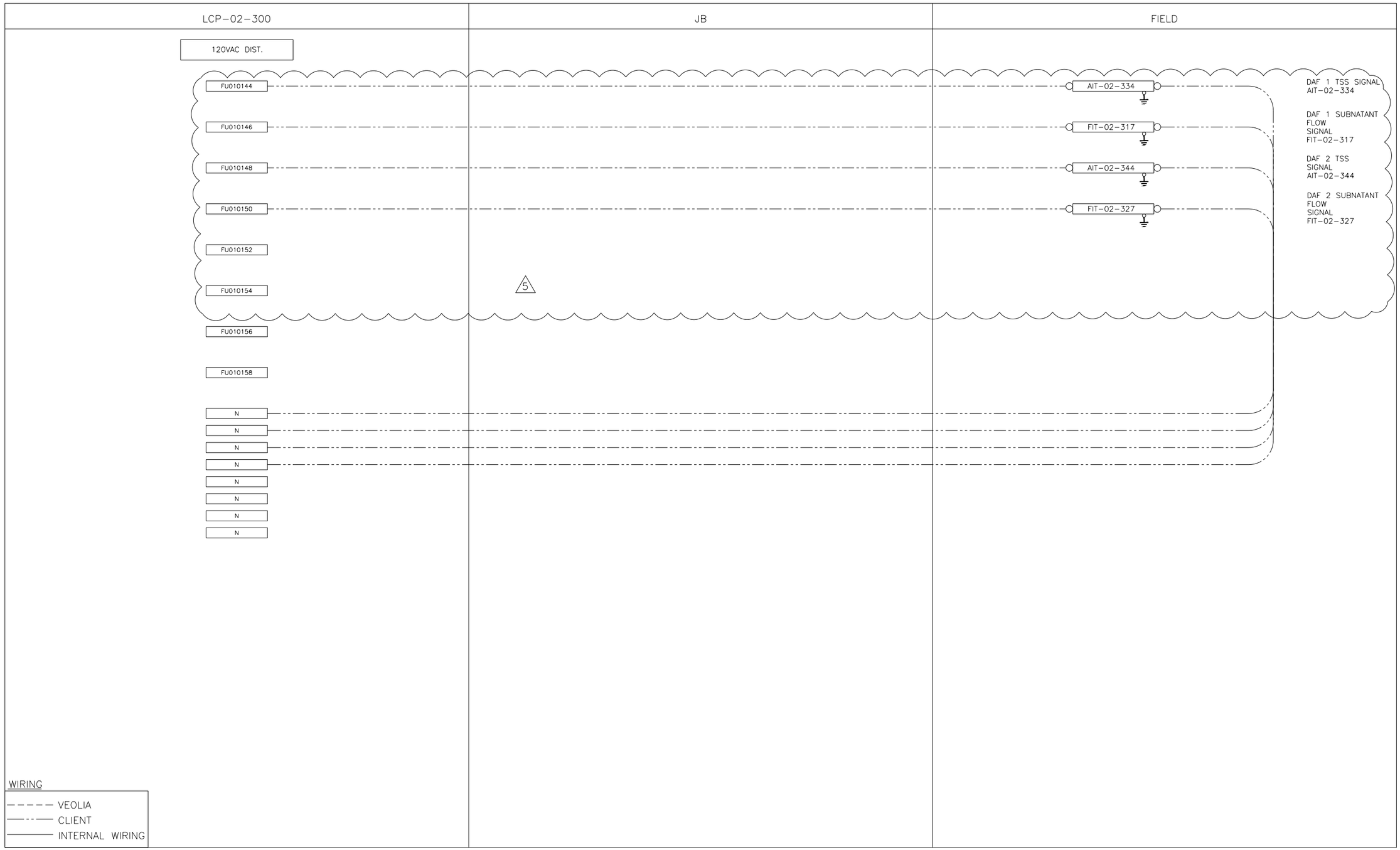


| REV | DESCRIPTION | DATE | REVD | CHKD | APVD | ECN |
|---|---|---|---|---|---|---|
| 5 | AS BUILT \|\| FIELD MODIFICATION | 2020-02-28 | SB | RA | – | – |
| 4 | AS BUILT \|\| FIELD MODIFICATION | 2019-07-29 | JC | RA | – | – |
| 3 | AS BUILT | 2019-03-27 | HZ | RA | – | – |
| 2 | FOR FABRICATION | 2019-03-19 | HZ | RA | – | – |
| 1 | FOR APPROVAL | 2019-01-03 | HZ | RA | – | – |

**CONFIDENTIALITY AND INTELLECTUAL PROPERTY NOTICE**
ALL INFORMATION CONTAINED IN THIS DOCUMENT IS THE SOLE PROPERTY OF VEOLIA WATER TECHNOLOGIES CANADA INC. AND IS PROTECTED BY ALL APPLICABLE LAWS, INCLUDING BUT NOT LIMITED TO COPYRIGHT AND OTHER INTELLECTUAL PROPERTY LAWS.. THE DESIGN CONCEPTS AND INFORMATION CONTAINED HEREIN ARE PROPRIETARY TO V.W.T AND ARE SUBMITTED IN CONFIDENCE. THEY ARE NOT TRANSFERABLE. THEY MUST BE USED ONLY FOR THE PURPOSE FOR WHICH THE DOCUMENT IS EXPRESSLY SUBMITTED AND NO IMPLICIT LICENCE IS GRANTED OTHERWISE BY THE SUBMISSION OF THIS DOCUMENT. THEY ARE CONFIDENTIAL AND PRIVILEGED INFORMATION OF V.W.T. AND THEY MUST NOT BE DISCLOSED, REPRODUCED, LOANED, REMITTED OR USED IN ANY OTHER MANNER WITHOUT THE EXPRESS WRITTEN CONSENT OF V.W.T. V.W.T. ASSUMES NO RESPONSIBILITY OR LIABILITY FOR THE USE OF THIS DOCUMENT OR THE DESIGN CONCEPTS AND INFORMATION CONTAINED HEREIN FOR ANOTHER PROJECT, OR IN A MANNER THAT DOES NOT RELATE TO THE FITNESS OR PURPOSE OF THIS DOCUMENT. IN NO EVENT SHALL THIS DOCUMENT OR THE DESIGN CONCEPTS AND INFORMATION CONTAINED HEREIN BE USED IN A MANNER DETRIMENTAL TO THE INTEREST OF V.W.T. ALL COPYRIGHT, PATENT AND OTHER INTELLECTUAL PROPERTY RIGHTS ARE RESERVED. ACCEPTANCE OF THE DELIVERY OF THIS DOCUMENT CONSTITUTES AGREEMENT TO THESE TERMS AND CONDITIONS.

| | |
|---|---|
| DESIGNER | DATE |
| – | – |
| CHECKER | DATE |
| – | – |
| ENGINEER | DATE |
| – | – |
| SCALE: | N/A |

TITLE
CONTROL PANEL LCP-02-300
FIELD WIRING

CLIENT
CITY OF IQALUIT

VEOLIA
VEOLIA WATER TECHNOLOGIES CANADA INC. 4105 Sartelon, Saint-Laurent, Qc, Canada. Tel: (514) 334-7230

| PROJECT DRAWING | INTERNAL | SHEET | REV |
|---|---|---|---|
| 5000218036-EID – 0001-AU-VWT | - | 01 OF 17 | 5 |

BAR = 1" AT PLOT SCALE
REF: A6798A
STD: "B" 11x17

Mar 09, 2020 15:32:38 - G:\Projets A67XX\A6798A @ A6798D - VEOLIA - 5000218036 Iqaluit WWTP Upgrade\DOC\DESSIN\000-DRAWINGS\LCP-02-300\REV 5\5000218036-EID-0001-AU-VWT-002.dwg - sbouya

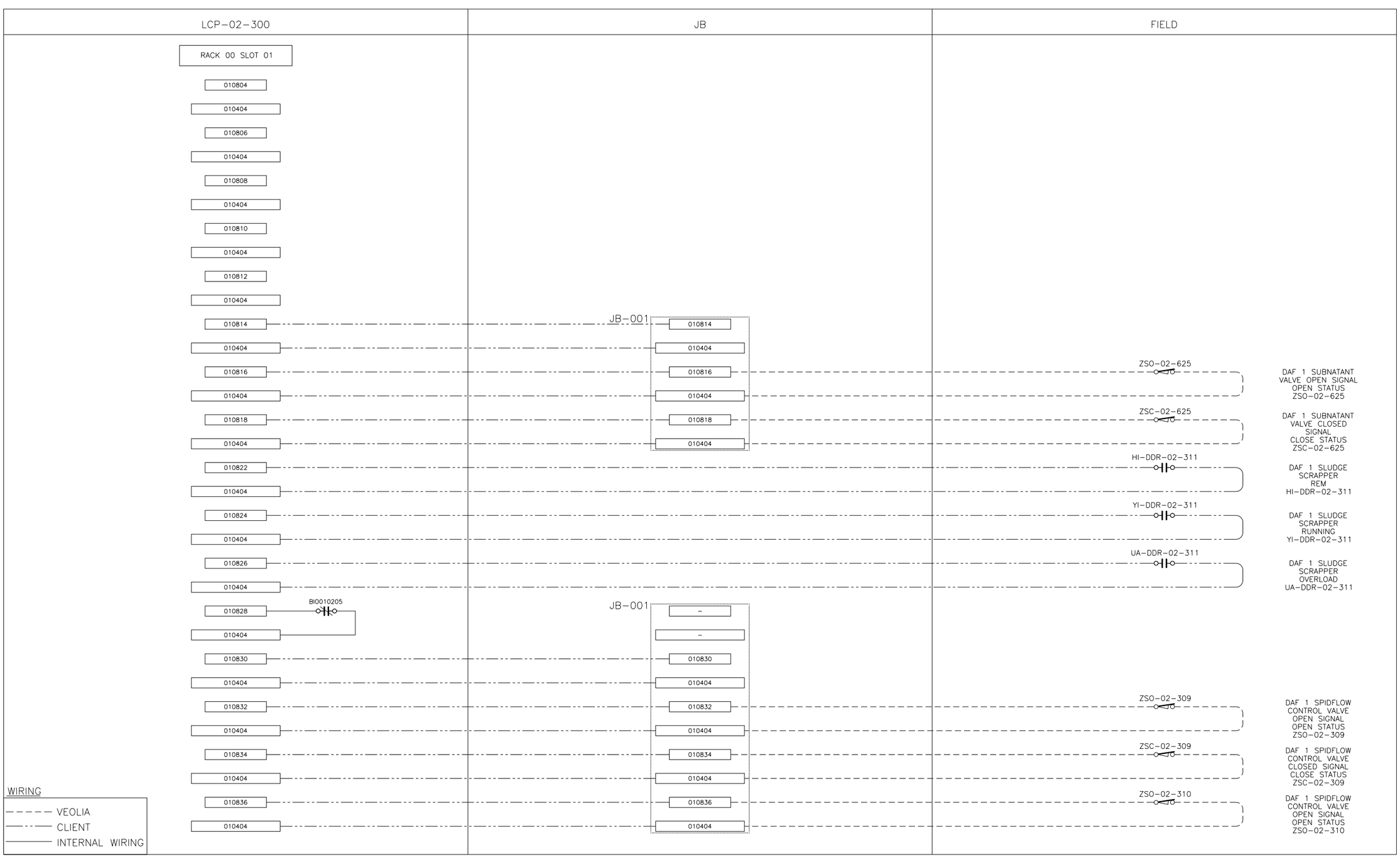


| REV | DESCRIPTION | DATE | REVD | CHKD | APVD | ECN |
|---|---|---|---|---|---|---|
| 5 | AS BUILT \|\| FIELD MODIFICATION | 2020-02-28 | SB | RA | – | – |
| 4 | AS BUILT \|\| FIELD MODIFICATION | 2019-07-29 | JC | RA | – | – |
| 3 | AS BUILT | 2019-03-27 | HZ | RA | – | – |
| 2 | FOR FABRICATION | 2019-03-19 | HZ | RA | – | – |
| 1 | FOR APPROVAL | 2019-01-03 | HZ | RA | – | – |

**CONFIDENTIALITY AND INTELLECTUAL PROPERTY NOTICE**
ALL INFORMATION CONTAINED IN THIS DOCUMENT IS THE SOLE PROPERTY OF VEOLIA WATER TECHNOLOGIES CANADA INC. AND IS PROTECTED BY ALL APPLICABLE LAWS, INCLUDING BUT NOT LIMITED TO COPYRIGHT AND OTHER INTELLECTUAL PROPERTY LAWS. THE DESIGN CONCEPTS AND INFORMATION CONTAINED HEREIN ARE PROPRIETARY TO V.W.T AND ARE SUBMITTED IN CONFIDENCE. THEY ARE NOT TRANSFERABLE. THEY MUST BE USED ONLY FOR THE PURPOSE FOR WHICH THE DOCUMENT IS EXPRESSLY SUBMITTED AND NO IMPLICIT LICENCE IS GRANTED OTHERWISE BY THE SUBMISSION OF THIS DOCUMENT. THEY ARE CONFIDENTIAL AND PRIVILEGED INFORMATION OF V.W.T. AND THEY MUST NOT BE DISCLOSED, REPRODUCED, LOANED, REMITTED OR USED IN ANY OTHER MANNER WITHOUT THE EXPRESS WRITTEN CONSENT OF V.W.T. V.W.T. ASSUMES NO RESPONSIBILITY OR LIABILITY FOR THE USE OF THIS DOCUMENT OR THE DESIGN CONCEPTS AND INFORMATION CONTAINED HEREIN FOR ANOTHER PROJECT, OR IN A MANNER THAT DOES NOT RELATE TO THE FITNESS OR PURPOSE OF THIS DOCUMENT. IN NO EVENT SHALL THIS DOCUMENT OR THE DESIGN CONCEPTS AND INFORMATION CONTAINED HEREIN BE USED IN A MANNER DETRIMENTAL TO THE INTEREST OF V.W.T. ALL COPYRIGHT, PATENT AND OTHER INTELLECTUAL PROPERTY RIGHTS ARE RESERVED. ACCEPTANCE OF THE DELIVERY OF THIS DOCUMENT CONSTITUTES AGREEMENT TO THESE TERMS AND CONDITIONS.

| | |
|---|---|
| DESIGNER | DATE |
| – | – |
| CHECKER | DATE |
| – | – |
| ENGINEER | DATE |
| – | – |
| SCALE: | N/A |

TITLE
# CONTROL PANEL LCP-02-300 FIELD WIRING

CLIENT
CITY OF IQALUIT

VEOLIA WATER TECHNOLOGIES CANADA INC. 4105 Sartelon, Saint-Laurent, Qc, Canada. Tel: (514) 334-7230

| PROJECT DRAWING | INTERNAL | SHEET | REV |
|---|---|---|---|
| 5000218036-EID – 0001-AU-VWT | – | 02 OF 17 | 5 |

BAR = 1" AT PLOT SCALE
REF: A6798A
STD: "B" 11x17

Mar 09, 2020 15:32:40 - G:\Projets A67XX\A6798A @ A6798D - VEOLIA - 5000218036 Iqaluit WWTP Upgrade\DOC\DESSIN\000-DRAWINGS\LCP-02-300\REV 5\5000218036-EID-0001-AU-VWT-003.dwg - sbouya

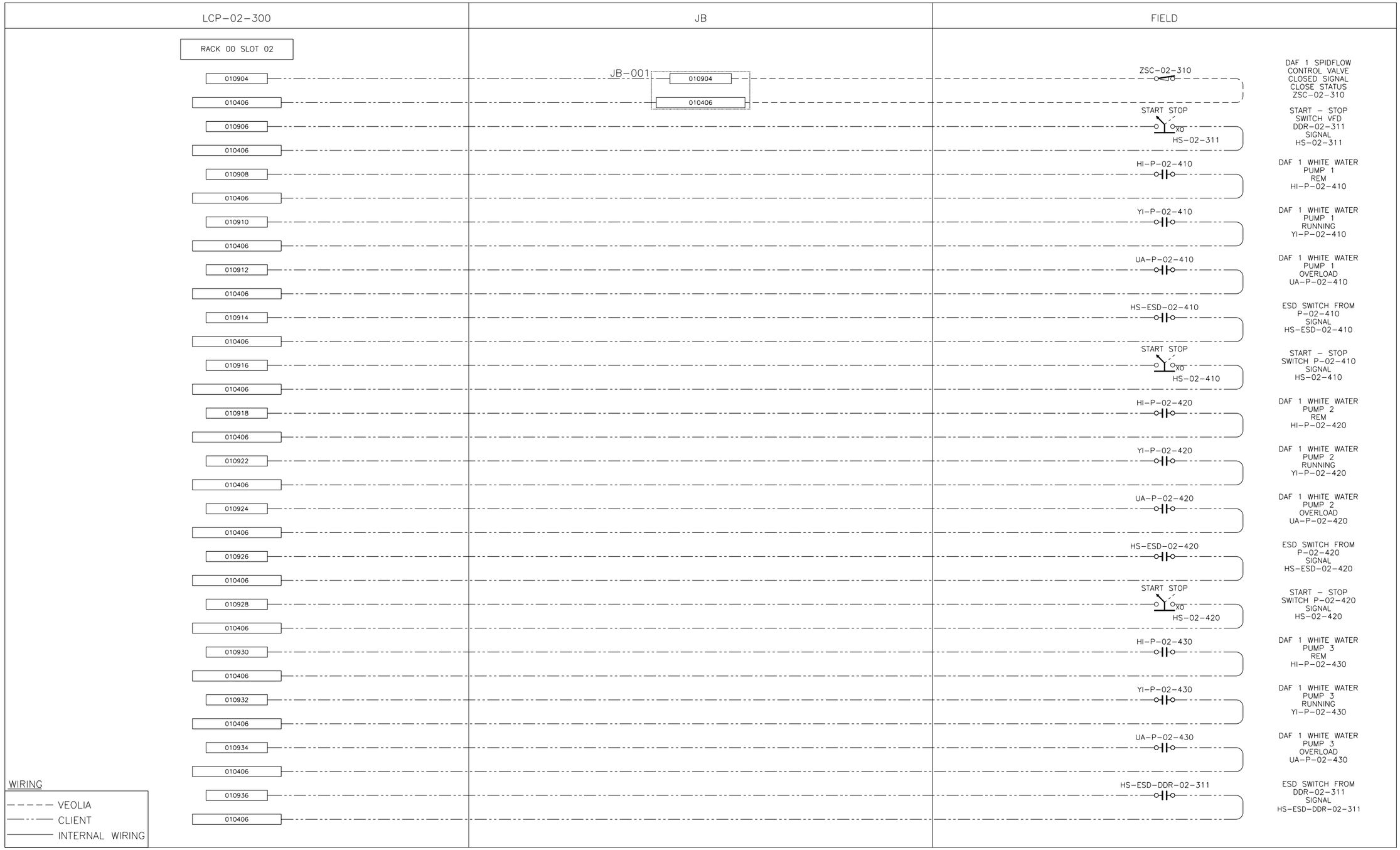


| REV | DESCRIPTION | DATE | REVD | CHKD | APVD | ECN |
|---|---|---|---|---|---|---|
| 5 | AS BUILT \|\| FIELD MODIFICATION | 2020-02-28 | SB | RA | – | – |
| 4 | AS BUILT \|\| FIELD MODIFICATION | 2019-07-29 | JC | RA | – | – |
| 3 | AS BUILT | 2019-03-27 | HZ | RA | – | – |
| 2 | FOR FABRICATION | 2019-03-19 | HZ | RA | – | – |
| 1 | FOR APPROVAL | 2019-01-03 | HZ | RA | – | – |

**CONFIDENTIALITY AND INTELLECTUAL PROPERTY NOTICE**
ALL INFORMATION CONTAINED IN THIS DOCUMENT IS THE SOLE PROPERTY OF VEOLIA WATER TECHNOLOGIES CANADA INC. AND IS PROTECTED BY ALL APPLICABLE LAWS, INCLUDING BUT NOT LIMITED TO COPYRIGHT AND OTHER INTELLECTUAL PROPERTY LAWS. THE DESIGN CONCEPTS AND INFORMATION CONTAINED HEREIN ARE PROPRIETARY TO V.W.T AND ARE SUBMITTED IN CONFIDENCE. THEY ARE NOT TRANSFERABLE. THEY MUST BE USED ONLY FOR THE PURPOSE FOR WHICH THE DOCUMENT IS EXPRESSLY SUBMITTED AND NO IMPLICIT LICENCE IS GRANTED OTHERWISE BY THE SUBMISSION OF THIS DOCUMENT. THEY ARE CONFIDENTIAL AND PRIVILEGED INFORMATION OF V.W.T. AND THEY MUST NOT BE DISCLOSED, REPRODUCED, LOANED, REMITTED OR USED IN ANY OTHER MANNER WITHOUT THE EXPRESS WRITTEN CONSENT OF V.W.T. V.W.T. ASSUMES NO RESPONSIBILITY OR LIABILITY FOR THE USE OF THIS DOCUMENT OR THE DESIGN CONCEPTS AND INFORMATION CONTAINED HEREIN FOR ANOTHER PROJECT, OR IN A MANNER THAT DOES NOT RELATE TO THE FITNESS OR PURPOSE OF THIS DOCUMENT. IN NO EVENT SHALL THIS DOCUMENT OR THE DESIGN CONCEPTS AND INFORMATION CONTAINED HEREIN BE USED IN A MANNER DETRIMENTAL TO THE INTEREST OF V.W.T. ALL COPYRIGHT, PATENT AND OTHER INTELLECTUAL PROPERTY RIGHTS ARE RESERVED. ACCEPTANCE OF THE DELIVERY OF THIS DOCUMENT CONSTITUTES AGREEMENT TO THESE TERMS AND CONDITIONS.

| | |
|---|---|
| DESIGNER | DATE |
| – | – |
| CHECKER | DATE |
| – | – |
| ENGINEER | DATE |
| – | – |
| SCALE: | N/A |

TITLE
CONTROL PANEL LCP-02-300
FIELD WIRING

CLIENT
CITY OF IQALUIT

VEOLIA
VEOLIA WATER TECHNOLOGIES CANADA INC. 4105 Sartelon, Saint-Laurent, Qc, Canada. Tel: (514) 334-7230

| PROJECT / DRAWING | INTERNAL | SHEET | REV |
|---|---|---|---|
| 5000218036-EID – 0001-AU-VWT | – | 03 OF 17 | 5 |

BAR = 1" AT PLOT SCALE
REF: A6798A
STD: "B" 11x17

Mar 09, 2020 15:32:42 - G:\Projets A67XX\A6798A @ A6798D - VEOLIA - 5000218036 Iqaluit WWTP Upgrade\DOC\DESSIN\000-DRAWINGS\LCP-02-300\REV 5\5000218036-EID-0001-AU-VWT-004.dwg - sbouya

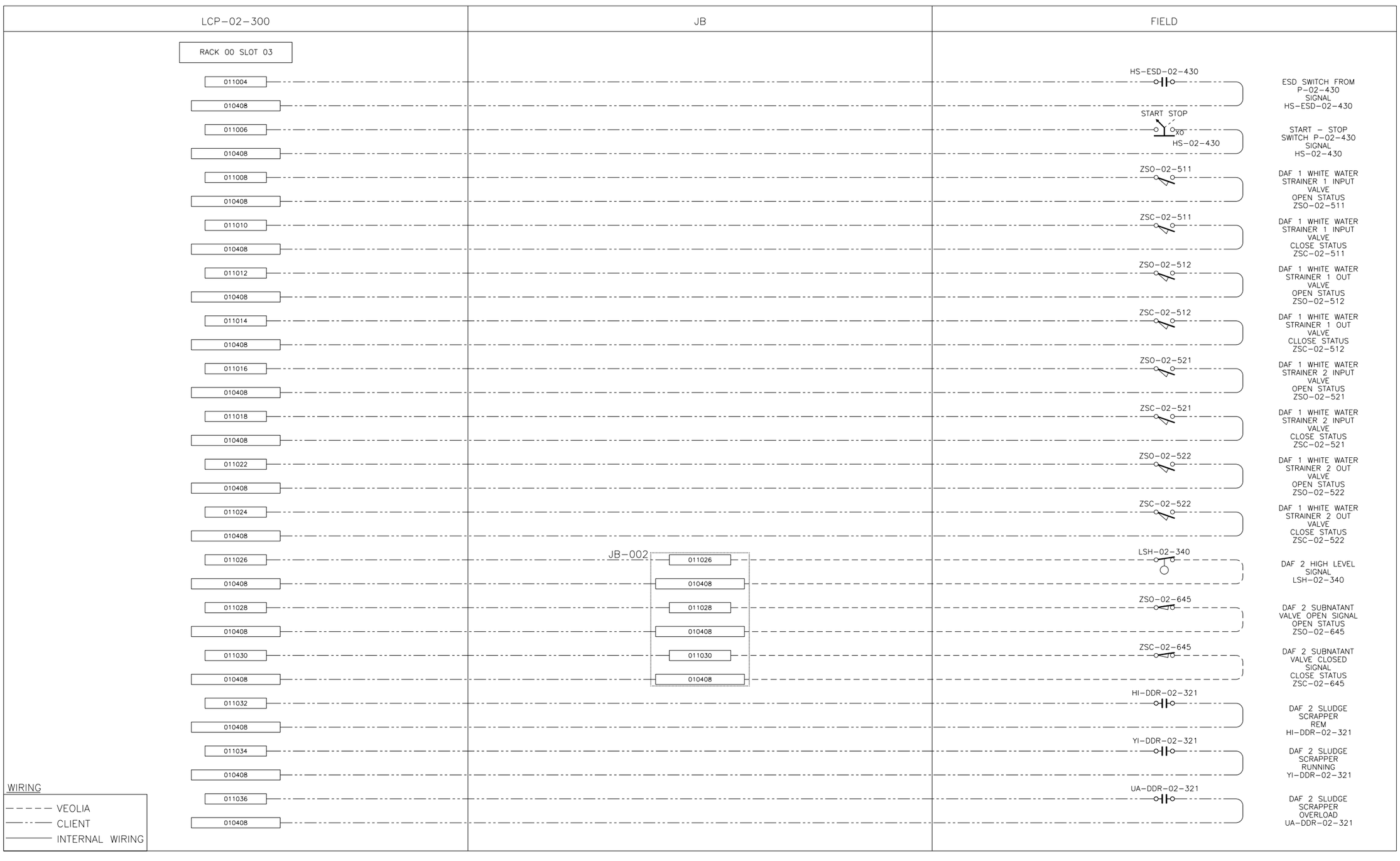


| REV | DESCRIPTION | DATE | REVD | CHKD | APVD | ECN |
|---|---|---|---|---|---|---|
| 5 | AS BUILT \|\| FIELD MODIFICATION | 2020-02-28 | SB | RA | – | – |
| 4 | AS BUILT \|\| FIELD MODIFICATION | 2019-07-29 | JC | RA | – | – |
| 3 | AS BUILT | 2019-03-27 | HZ | RA | – | – |
| 2 | FOR FABRICATION | 2019-03-19 | HZ | RA | – | – |
| 1 | FOR APPROVAL | 2019-01-03 | HZ | RA | – | – |

**CONFIDENTIALITY AND INTELLECTUAL PROPERTY NOTICE**
ALL INFORMATION CONTAINED IN THIS DOCUMENT IS THE SOLE PROPERTY OF VEOLIA WATER TECHNOLOGIES CANADA INC. AND IS PROTECTED BY ALL APPLICABLE LAWS, INCLUDING BUT NOT LIMITED TO COPYRIGHT AND OTHER INTELLECTUAL PROPERTY LAWS. THE DESIGN CONCEPTS AND INFORMATION CONTAINED HEREIN ARE PROPRIETARY TO V.W.T AND ARE SUBMITTED IN CONFIDENCE. THEY ARE NOT TRANSFERABLE. THEY MUST BE USED ONLY FOR THE PURPOSE FOR WHICH THE DOCUMENT IS EXPRESSLY SUBMITTED AND NO IMPLICIT LICENCE IS GRANTED OTHERWISE BY THE SUBMISSION OF THIS DOCUMENT. THEY ARE CONFIDENTIAL AND PRIVILEGED INFORMATION OF V.W.T. AND THEY MUST NOT BE DISCLOSED, REPRODUCED, LOANED, REMITTED OR USED IN ANY OTHER MANNER WITHOUT THE EXPRESS WRITTEN CONSENT OF V.W.T. V.W.T. ASSUMES NO RESPONSIBILITY OR LIABILITY FOR THE USE OF THIS DOCUMENT OR THE DESIGN CONCEPTS AND INFORMATION CONTAINED HEREIN FOR ANOTHER PROJECT, OR IN A MANNER THAT DOES NOT RELATE TO THE FITNESS OR PURPOSE OF THIS DOCUMENT. IN NO EVENT SHALL THIS DOCUMENT OR THE DESIGN CONCEPTS AND INFORMATION CONTAINED HEREIN BE USED IN A MANNER DETRIMENTAL TO THE INTEREST OF V.W.T. ALL COPYRIGHT, PATENT AND OTHER INTELLECTUAL PROPERTY RIGHTS ARE RESERVED. ACCEPTANCE OF THE DELIVERY OF THIS DOCUMENT CONSTITUTES AGREEMENT TO THESE TERMS AND CONDITIONS.

| | |
|---|---|
| DESIGNER | DATE |
| – | – |
| CHECKER | DATE |
| – | – |
| ENGINEER | DATE |
| – | – |
| SCALE: | N/A |

TITLE
CONTROL PANEL LCP-02-300
FIELD WIRING

CLIENT
CITY OF IQALUIT

VEOLIA
VEOLIA WATER TECHNOLOGIES CANADA INC. 4105 Sartelon, Saint-Laurent, Qc, Canada. Tel: (514) 334-7230

| PROJECT | DRAWING | INTERNAL | SHEET | REV |
|---|---|---|---|---|
| 5000218036-EID – | 0001-AU-VWT | – | 04 OF 17 | 5 |

BAR = 1" AT PLOT SCALE
REF: A6798A
STD: "B" 11x17

Mar 09, 2020 15:32:43 – G:\Projets A67XX\A6798A @ A6798D – VEOLIA – 5000218036 Iqaluit WWTP Upgrade\DOC\DESSIN\000-DRAWINGS\LCP-02-300\REV 5\5000218036-EID-0001-AU-VWT-005.dwg – sbouya

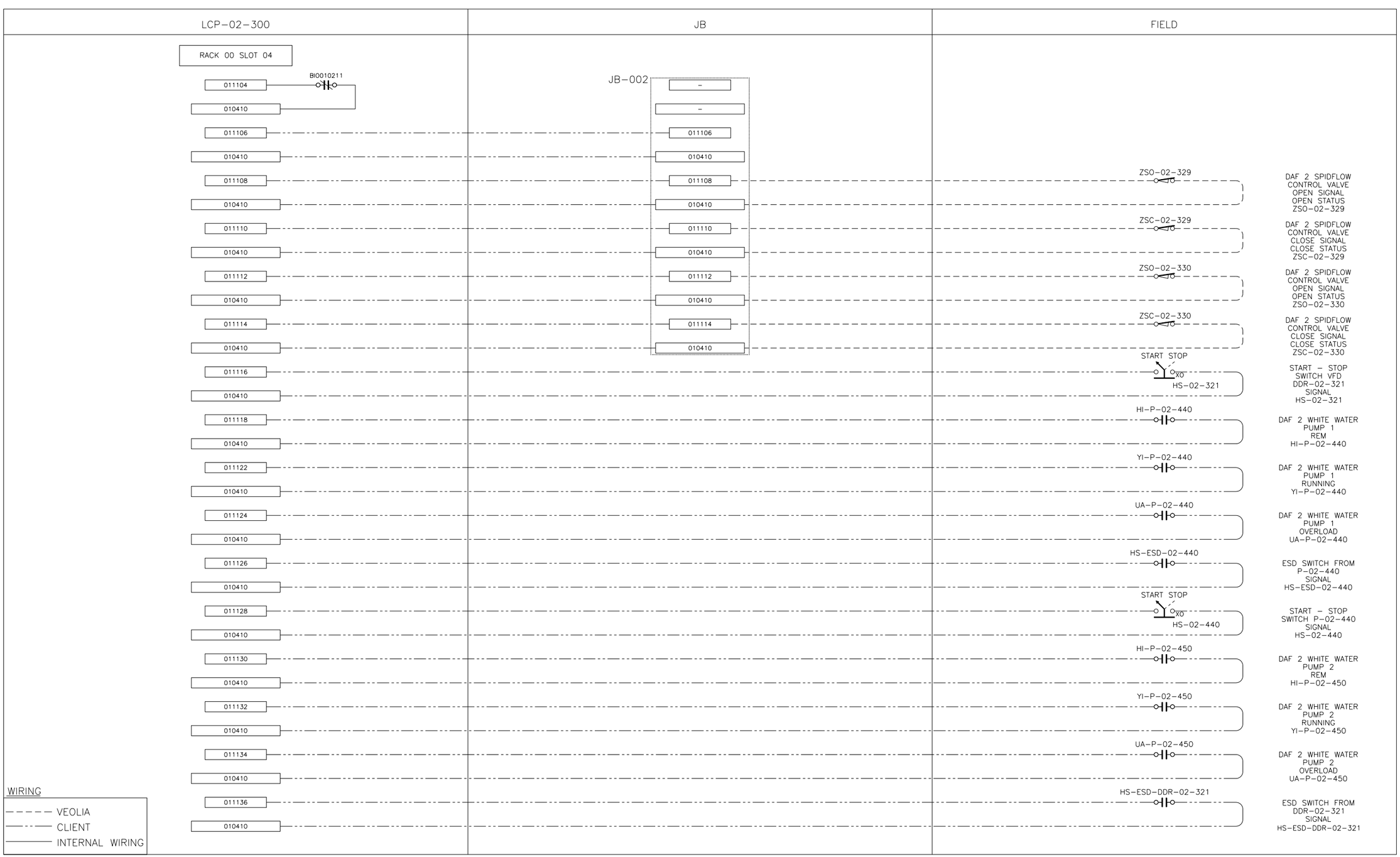


| REV | DESCRIPTION | DATE | REVD | CHKD | APVD | ECN |
|---|---|---|---|---|---|---|
| 5 | AS BUILT \|\| FIELD MODIFICATION | 2020-02-28 | SB | RA | – | – |
| 4 | AS BUILT \|\| FIELD MODIFICATION | 2019-07-29 | JC | RA | – | – |
| 3 | AS BUILT | 2019-03-27 | HZ | RA | – | – |
| 2 | FOR FABRICATION | 2019-03-19 | HZ | RA | – | – |
| 1 | FOR APPROVAL | 2019-01-03 | HZ | RA | – | – |

**CONFIDENTIALITY AND INTELLECTUAL PROPERTY NOTICE**
ALL INFORMATION CONTAINED IN THIS DOCUMENT IS THE SOLE PROPERTY OF VEOLIA WATER TECHNOLOGIES CANADA INC. AND IS PROTECTED BY ALL APPLICABLE LAWS, INCLUDING BUT NOT LIMITED TO COPYRIGHT AND OTHER INTELLECTUAL PROPERTY LAWS. THE DESIGN CONCEPTS AND INFORMATION CONTAINED HEREIN ARE PROPRIETARY TO V.W.T AND ARE SUBMITTED IN CONFIDENCE. THEY ARE NOT TRANSFERABLE. THEY MUST BE USED ONLY FOR THE PURPOSE FOR WHICH THE DOCUMENT IS EXPRESSLY SUBMITTED AND NO IMPLICIT LICENCE IS GRANTED OTHERWISE BY THE SUBMISSION OF THIS DOCUMENT. THEY ARE CONFIDENTIAL AND PRIVILEGED INFORMATION OF V.W.T. AND THEY MUST NOT BE DISCLOSED, REPRODUCED, LOANED, REMITTED OR USED IN ANY OTHER MANNER WITHOUT THE EXPRESS WRITTEN CONSENT OF V.W.T. V.W.T. ASSUMES NO RESPONSIBILITY OR LIABILITY FOR THE USE OF THIS DOCUMENT OR THE DESIGN CONCEPTS AND INFORMATION CONTAINED HEREIN FOR ANOTHER PROJECT, OR IN A MANNER THAT DOES NOT RELATE TO THE FITNESS OR PURPOSE OF THIS DOCUMENT. IN NO EVENT SHALL THIS DOCUMENT OR THE DESIGN CONCEPTS AND INFORMATION CONTAINED HEREIN BE USED IN A MANNER DETRIMENTAL TO THE INTEREST OF V.W.T. ALL COPYRIGHT, PATENT AND OTHER INTELLECTUAL PROPERTY RIGHTS ARE RESERVED. ACCEPTANCE OF THE DELIVERY OF THIS DOCUMENT CONSTITUTES AGREEMENT TO THESE TERMS AND CONDITIONS.

| | |
|---|---|
| DESIGNER | DATE |
| – | – |
| CHECKER | DATE |
| – | – |
| ENGINEER | DATE |
| – | – |
| SCALE: | N/A |

TITLE
# CONTROL PANEL LCP-02-300 FIELD WIRING

CLIENT
CITY OF IQALUIT

VEOLIA
VEOLIA WATER TECHNOLOGIES CANADA INC. 4105 Sartelon, Saint-Laurent, Qc, Canada. Tel: (514) 334-7230

| PROJECT DRAWING | INTERNAL | SHEET | REV |
|---|---|---|---|
| 5000218036-EID – 0001-AU-VWT | – | 05 OF 17 | 5 |

BAR = 1" AT PLOT SCALE
REF: A6798A
STD: "B" 11x17

Mar 09, 2020 15:32:45 - G:\Projets A67XX\A6798A @ A6798D - VEOLIA - 5000218036 Iqaluit WWTP Upgrade\DOC\DESSIN\000-DRAWINGS\LCP-02-300\REV 5\5000218036-EID-0001-AU-VWT-006.dwg - sbouya

| LCP-02-300 | | JB | FIELD | |
|---|---|---|---|---|
| RACK 00 SLOT 05 | | | | |
| 011204 | | | HS-ESD-02-450 | ESD SWITCH FROM P-02-450 SIGNAL HS-ESD-02-450 |
| 010412 | | | | |
| 011206 | | | START STOP X0 HS-02-450 | START - STOP SWITCH P-02-450 SIGNAL HS-02-450 |
| 010412 | | | | |
| 011208 | | | HI-P-02-460 | DAF 2 WHITE WATER PUMP 3 REM HI-P-02-460 |
| 010412 | | | | |
| 011210 | | | YI-P-02-460 | DAF 2 WHITE WATER PUMP 3 RUNNING YI-P-02-460 |
| 010412 | | | | |
| 011212 | | | UA-P-02-460 | DAF 2 WHITE WATER PUMP 3 OVERLOAD UA-P-02-460 |
| 010412 | | | | |
| 011214 | | | HS-ESD-02-460 | ESD SWITCH FROM P-02-460 SIGNAL HS-ESD-02-460 |
| 010412 | | | | |
| 011216 | | | START STOP X0 HS-02-460 | START - STOP SWITCH P-02-460 SIGNAL HS-02-460 |
| 010412 | | | | |
| 011218 | | | ZSO-02-531 | DAF 2 WHITE WATER STRAINER 1 IN VALVE OPEN STATUS ZSO-02-531 |
| 010412 | | | | |
| 011222 | | | ZSC-02-531 | DAF 2 WHITE WATER STRAINER 1 IN VALVE CLOSE STATUS ZSC-02-531 |
| 010412 | | | | |
| 011224 | | | ZSO-02-532 | DAF 2 WHITE WATER STRAINER 1 OUT VALVE OPEN STATUS ZSO-02-532 |
| 010412 | | | | |
| 011226 | | | ZSC-02-532 | DAF 2 WHITE WATER STRAINER 1 OUT VALVE CLOSE STATUS ZSC-02-532 |
| 010412 | | | | |
| 011228 | | | ZSO-02-541 | DAF 2 WHITE WATER STRAINER 2 IN VALVE OPEN STATUS ZSO-02-541 |
| 010412 | | | | |
| 011230 | | | ZSC-02-541 | DAF 2 WHITE WATER STRAINER 2 IN VALVE CLOSE STATUS ZSC-02-541 |
| 010412 | | | | |
| 011232 | | | ZSO-02-542 | DAF 2 WHITE WATER STRAINER 2 OUT VALVE OPEN STATUS ZSO-02-542 |
| 010412 | | | | |
| 011234 | | | ZSC-02-542 | DAF 2 WHITE WATER STRAINER 2 OUT VALVE CLOSE STATUS ZSC-02-542 |
| 010412 | | | | |
| 011236 | | | | |
| 010412 | | | | |

WIRING

- VEOLIA
- CLIENT
- INTERNAL WIRING

| REV | DESCRIPTION | DATE | REVD | CHKD | APVD | ECN |
|---|---|---|---|---|---|---|
| 5 | AS BUILT || FIELD MODIFICATION | 2020-02-28 | SB | RA | - | - |
| 4 | AS BUILT || FIELD MODIFICATION | 2019-07-29 | JC | RA | - | - |
| 3 | AS BUILT | 2019-03-27 | HZ | RA | - | - |
| 2 | FOR FABRICATION | 2019-03-19 | HZ | RA | - | - |
| 1 | FOR APPROVAL | 2019-01-03 | HZ | RA | - | - |

**CONFIDENTIALITY AND INTELLECTUAL PROPERTY NOTICE**
ALL INFORMATION CONTAINED IN THIS DOCUMENT IS THE SOLE PROPERTY OF VEOLIA WATER TECHNOLOGIES CANADA INC. AND IS PROTECTED BY ALL APPLICABLE LAWS, INCLUDING BUT NOT LIMITED TO COPYRIGHT AND OTHER INTELLECTUAL PROPERTY LAWS. THE DESIGN CONCEPTS AND INFORMATION CONTAINED HEREIN ARE PROPRIETARY TO V.W.T AND ARE SUBMITTED IN CONFIDENCE. THEY ARE NOT TRANSFERABLE. THEY MUST BE USED ONLY FOR THE PURPOSE FOR WHICH THE DOCUMENT IS EXPRESSLY SUBMITTED AND NO IMPLICIT LICENCE IS GRANTED OTHERWISE BY THE SUBMISSION OF THIS DOCUMENT. THEY ARE CONFIDENTIAL AND PRIVILEGED INFORMATION OF V.W.T. AND THEY MUST NOT BE DISCLOSED, REPRODUCED, LOANED, REMITTED OR USED IN ANY OTHER MANNER WITHOUT THE EXPRESS WRITTEN CONSENT OF V.W.T. V.W.T. ASSUMES NO RESPONSIBILITY OR LIABILITY FOR THE USE OF THIS DOCUMENT OR THE DESIGN CONCEPTS AND INFORMATION CONTAINED HEREIN FOR ANOTHER PROJECT, OR IN A MANNER THAT DOES NOT RELATE TO THE FITNESS OR PURPOSE OF THIS DOCUMENT. IN NO EVENT SHALL THIS DOCUMENT OR THE DESIGN CONCEPTS AND INFORMATION CONTAINED HEREIN BE USED IN A MANNER DETRIMENTAL TO THE INTEREST OF V.W.T. ALL COPYRIGHT, PATENT AND OTHER INTELLECTUAL PROPERTY RIGHTS ARE RESERVED. ACCEPTANCE OF THE DELIVERY OF THIS DOCUMENT CONSTITUTES AGREEMENT TO THESE TERMS AND CONDITIONS.

| | |
|---|---|
| DESIGNER | DATE |
| - | - |
| CHECKER | DATE |
| - | - |
| ENGINEER | DATE |
| - | - |
| SCALE: | N/A |

TITLE

CONTROL PANEL LCP-02-300
FIELD WIRING

CLIENT

CITY OF IQALUIT

VEOLIA
VEOLIA WATER TECHNOLOGIES CANADA INC. 4105 Sartelon, Saint-Laurent, Qc, Canada. Tel: (514) 334-7230

| PROJECT | DRAWING | INTERNAL | SHEET | REV |
|---|---|---|---|---|
| 5000218036-EID - | 0001-AU-VWT | - | 06 OF 17 | 5 |

| LCP-02-300 | JB | FIELD |
|---|---|---|

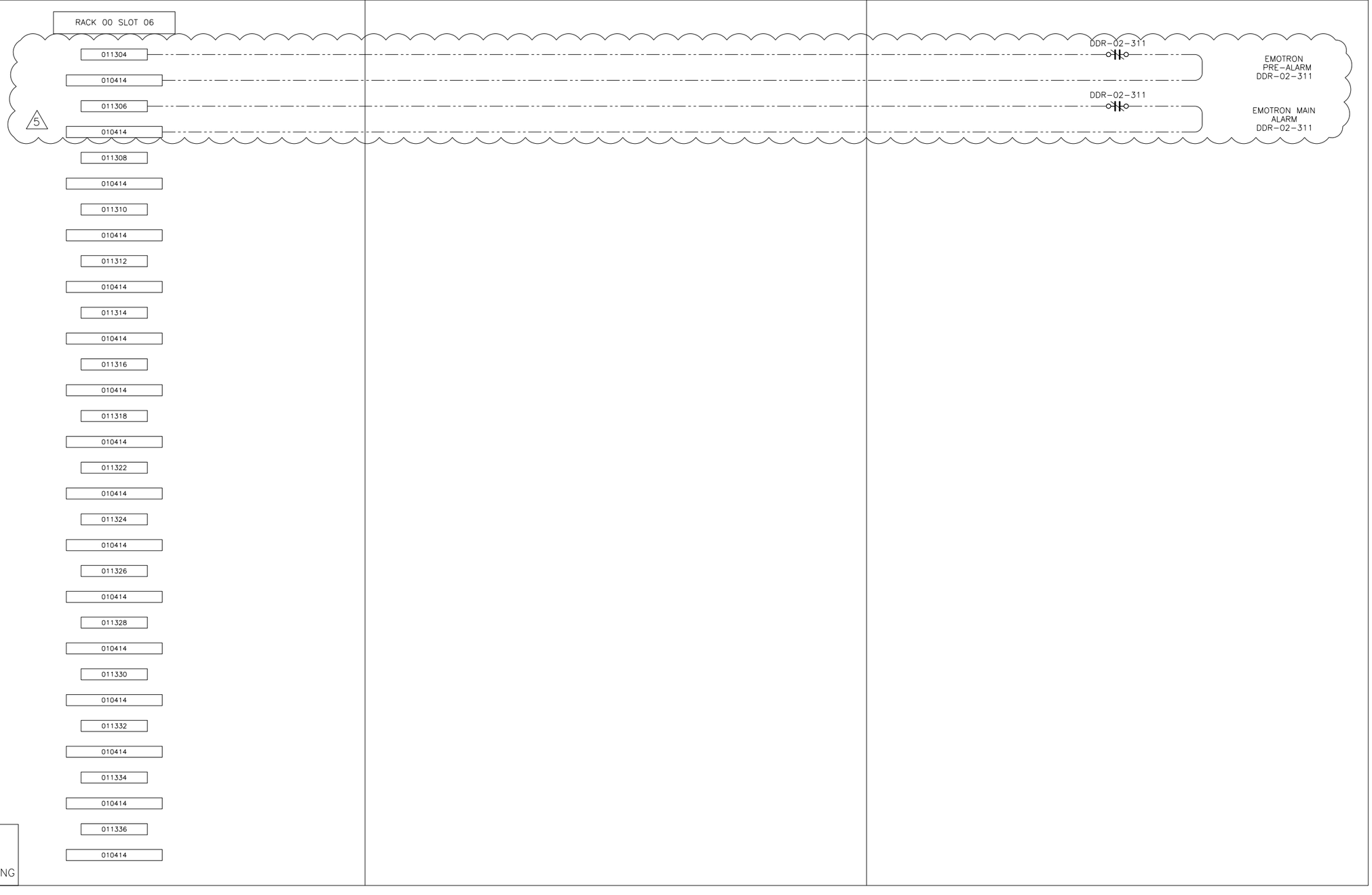


WIRING

- VEOLIA
- CLIENT
- INTERNAL WIRING

| REV | DESCRIPTION | DATE | REVD | CHKD | APVD | ECN |
|---|---|---|---|---|---|---|
| 5 | AS BUILT \|\| FIELD MODIFICATION | 2020-02-28 | SB | RA | – | – |
| 4 | AS BUILT \|\| FIELD MODIFICATION | 2019-07-29 | JC | RA | – | – |
| 3 | AS BUILT | 2019-03-27 | HZ | RA | – | – |
| 2 | FOR FABRICATION | 2019-03-19 | HZ | RA | – | – |
| 1 | FOR APPROVAL | 2019-01-03 | HZ | RA | – | – |

**CONFIDENTIALITY AND INTELLECTUAL PROPERTY NOTICE**
ALL INFORMATION CONTAINED IN THIS DOCUMENT IS THE SOLE PROPERTY OF VEOLIA WATER TECHNOLOGIES CANADA INC. AND IS PROTECTED BY ALL APPLICABLE LAWS, INCLUDING BUT NOT LIMITED TO COPYRIGHT AND OTHER INTELLECTUAL PROPERTY LAWS. THE DESIGN CONCEPTS AND INFORMATION CONTAINED HEREIN ARE PROPRIETARY TO V.W.T AND ARE SUBMITTED IN CONFIDENCE. THEY ARE NOT TRANSFERABLE. THEY MUST BE USED ONLY FOR THE PURPOSE FOR WHICH THE DOCUMENT IS EXPRESSLY SUBMITTED AND NO IMPLICIT LICENCE IS GRANTED OTHERWISE BY THE SUBMISSION OF THIS DOCUMENT. THEY ARE CONFIDENTIAL AND PRIVILEGED INFORMATION OF V.W.T. AND THEY MUST NOT BE DISCLOSED, REPRODUCED, LOANED, REMITTED OR USED IN ANY OTHER MANNER WITHOUT THE EXPRESS WRITTEN CONSENT OF V.W.T. V.W.T. ASSUMES NO RESPONSIBILITY OR LIABILITY FOR THE USE OF THIS DOCUMENT OR THE DESIGN CONCEPTS AND INFORMATION CONTAINED HEREIN FOR ANOTHER PROJECT, OR IN A MANNER THAT DOES NOT RELATE TO THE FITNESS OR PURPOSE OF THIS DOCUMENT. IN NO EVENT SHALL THIS DOCUMENT OR THE DESIGN CONCEPTS AND INFORMATION CONTAINED HEREIN BE USED IN A MANNER DETRIMENTAL TO THE INTEREST OF V.W.T. ALL COPYRIGHT, PATENT AND OTHER INTELLECTUAL PROPERTY RIGHTS ARE RESERVED. ACCEPTANCE OF THE DELIVERY OF THIS DOCUMENT CONSTITUTES AGREEMENT TO THESE TERMS AND CONDITIONS.

| | |
|---|---|
| DESIGNER | DATE |
| – | – |
| CHECKER | DATE |
| – | – |
| ENGINEER | DATE |
| – | – |
| SCALE: | N/A |

TITLE
CONTROL PANEL LCP-02-300
FIELD WIRING

CLIENT
CITY OF IQALUIT

VEOLIA
VEOLIA WATER TECHNOLOGIES CANADA INC. 4105 Sartelon, Saint-Laurent, Qc, Canada. Tel: (514) 334-7230

| PROJECT DRAWING | INTERNAL | SHEET | REV |
|---|---|---|---|
| 5000218036-EID – 0001-AU-VWT | – | 07 OF 17 | 5 |

BAR = 1" AT PLOT SCALE
REF: A6798A
STD: "B" 11x17

Mar 09, 2020 15:32:46 – G:\Projets A67XX\A6798A @ A6798D – VEOLIA – 5000218036 Iqaluit WWTP Upgrade\DOC\DESSIN\000-DRAWINGS\LCP-02-300\REV 5\5000218036-EID-0001-AU-VWT-007.dwg – sbouya

| LCP-02-300 | JB | FIELD |
|---|---|---|

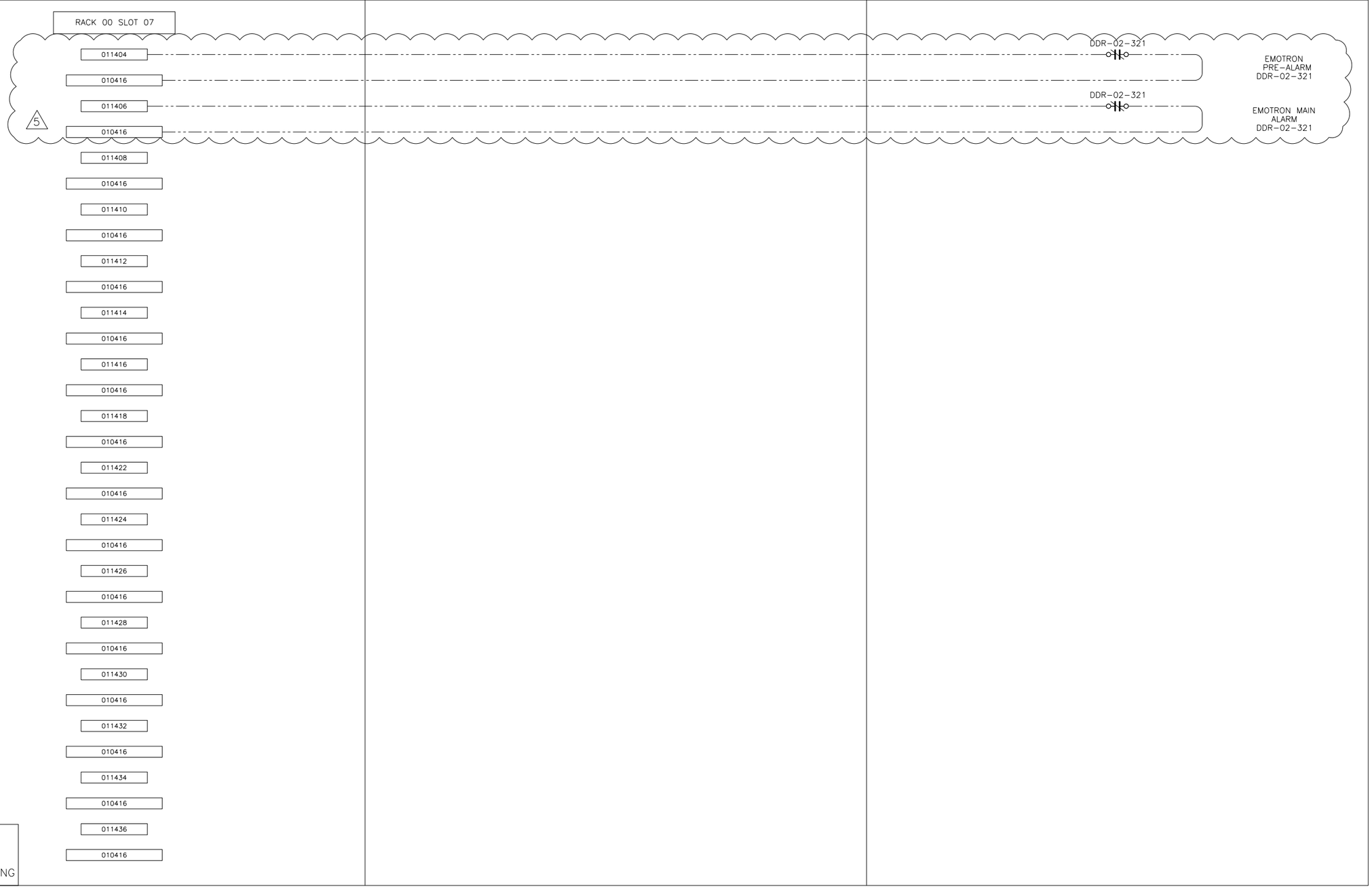


WIRING

- VEOLIA
- CLIENT
- INTERNAL WIRING

| REV | DESCRIPTION | DATE | REVD | CHKD | APVD | ECN |
|---|---|---|---|---|---|---|
| 5 | AS BUILT \|\| FIELD MODIFICATION | 2020-02-28 | SB | RA | – | – |
| 4 | AS BUILT \|\| FIELD MODIFICATION | 2019-07-29 | JC | RA | – | – |
| 3 | AS BUILT | 2019-03-27 | HZ | RA | – | – |
| 2 | FOR FABRICATION | 2019-03-19 | HZ | RA | – | – |
| 1 | FOR APPROVAL | 2019-01-03 | HZ | RA | – | – |

**CONFIDENTIALITY AND INTELLECTUAL PROPERTY NOTICE**
ALL INFORMATION CONTAINED IN THIS DOCUMENT IS THE SOLE PROPERTY OF VEOLIA WATER TECHNOLOGIES CANADA INC. AND IS PROTECTED BY ALL APPLICABLE LAWS, INCLUDING BUT NOT LIMITED TO COPYRIGHT AND OTHER INTELLECTUAL PROPERTY LAWS. THE DESIGN CONCEPTS AND INFORMATION CONTAINED HEREIN ARE PROPRIETARY TO V.W.T AND ARE SUBMITTED IN CONFIDENCE. THEY ARE NOT TRANSFERABLE. THEY MUST BE USED ONLY FOR THE PURPOSE FOR WHICH THE DOCUMENT IS EXPRESSLY SUBMITTED AND NO IMPLICIT LICENCE IS GRANTED OTHERWISE BY THE SUBMISSION OF THIS DOCUMENT. THEY ARE CONFIDENTIAL AND PRIVILEGED INFORMATION OF V.W.T. AND THEY MUST NOT BE DISCLOSED, REPRODUCED, LOANED, REMITTED OR USED IN ANY OTHER MANNER WITHOUT THE EXPRESS WRITTEN CONSENT OF V.W.T. V.W.T. ASSUMES NO RESPONSIBILITY OR LIABILITY FOR THE USE OF THIS DOCUMENT OR THE DESIGN CONCEPTS AND INFORMATION CONTAINED HEREIN FOR ANOTHER PROJECT, OR IN A MANNER THAT DOES NOT RELATE TO THE FITNESS OR PURPOSE OF THIS DOCUMENT. IN NO EVENT SHALL THIS DOCUMENT OR THE DESIGN CONCEPTS AND INFORMATION CONTAINED HEREIN BE USED IN A MANNER DETRIMENTAL TO THE INTEREST OF V.W.T. ALL COPYRIGHT, PATENT AND OTHER INTELLECTUAL PROPERTY RIGHTS ARE RESERVED. ACCEPTANCE OF THE DELIVERY OF THIS DOCUMENT CONSTITUTES AGREEMENT TO THESE TERMS AND CONDITIONS.

| | |
|---|---|
| DESIGNER | DATE |
| – | – |
| CHECKER | DATE |
| – | – |
| ENGINEER | DATE |
| – | – |
| SCALE: | N/A |

TITLE
CONTROL PANEL LCP-02-300
FIELD WIRING

CLIENT
CITY OF IQALUIT

VEOLIA
VEOLIA WATER TECHNOLOGIES CANADA INC. 4105 Sartelon, Saint-Laurent, Qc, Canada. Tel: (514) 334-7230

| PROJECT DRAWING | INTERNAL | SHEET | REV |
|---|---|---|---|
| 5000218036-EID – 0001-AU-VWT | – | 08 OF 17 | 5 |

BAR = 1" AT PLOT SCALE
REF: A6798A
STD: "B" 11x17

Mar 09, 2020 15:32:48 – G:\Projets A67XX\A6798A @ A6798D – VEOLIA – 5000218036 Iqaluit WWTP Upgrade\DOC\DESSIN\000-DRAWINGS\LCP-02-300\REV 5\5000218036-EID-0001-AU-VWT-008.dwg – sbouya

BAR = 1" AT PLOT SCALE
REF: A6798A
STD: "B" 11x17

Mar 09, 2020 15:32:51 - G:\Projets A67XX\A6798A @ A6798D - VEOLIA - 5000218036 Iqaluit WWTP Upgrade\DOC\DESSIN\000-DRAWINGS\LCP-02-300\REV 5\5000218036-EID-0001-AU-VWT-009.dwg - sbouya

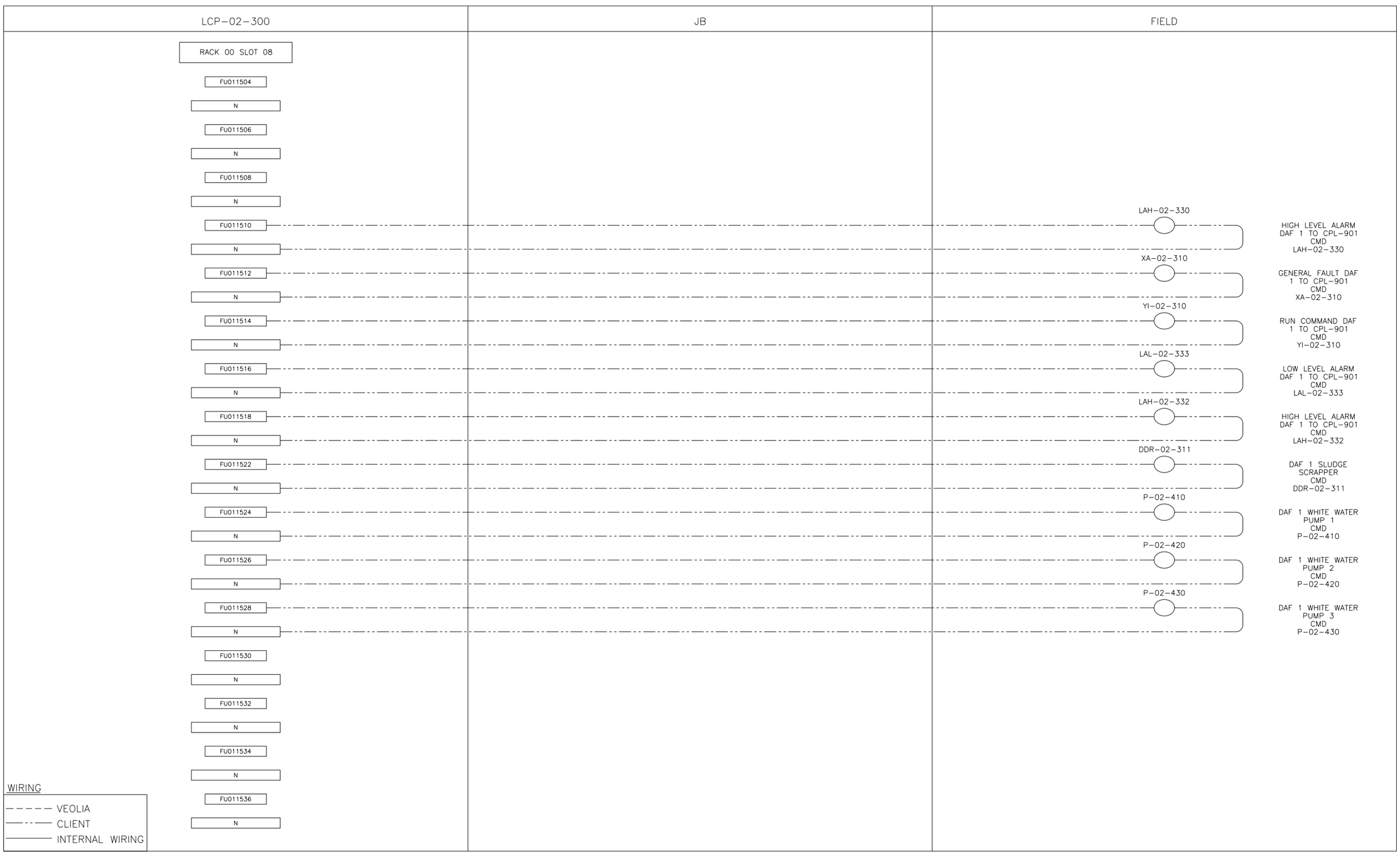


| REV | DESCRIPTION | DATE | REVD | CHKD | APVD | ECN |
|---|---|---|---|---|---|---|
| 5 | AS BUILT \|\| FIELD MODIFICATION | 2020-02-28 | SB | RA | – | – |
| 4 | AS BUILT \|\| FIELD MODIFICATION | 2019-07-29 | JC | RA | – | – |
| 3 | AS BUILT | 2019-03-27 | HZ | RA | – | – |
| 2 | FOR FABRICATION | 2019-03-19 | HZ | RA | – | – |
| 1 | FOR APPROVAL | 2019-01-03 | HZ | RA | – | – |

**CONFIDENTIALITY AND INTELLECTUAL PROPERTY NOTICE**
ALL INFORMATION CONTAINED IN THIS DOCUMENT IS THE SOLE PROPERTY OF VEOLIA WATER TECHNOLOGIES CANADA INC. AND IS PROTCOID BY ALL APPLICABLE LAWS, INCLUDING BUT NOT LIMITED TO COPYRIGHT AND OTHER INTELLECTUAL PROPERTY LAWS. THE DESIGN CONCEPTS AND INFORMATION CONTAINED HEREIN ARE PROPRIETARY TO V.W.T AND ARE SUBMITTED IN CONFIDENCE. THEY ARE NOT TRANSFERABLE. THEY MUST BE USED ONLY FOR THE PURPOSE FOR WHICH THE DOCUMENT IS EXPRESSLY SUBMITTED AND NO IMPLICIT LICENCE IS GRANTED OTHERWISE BY THE SUBMISSION OF THIS DOCUMENT. THEY ARE CONFIDENTIAL AND PRIVILEGED INFORMATION OF V.W.T. AND THEY MUST NOT BE DISCLOSED, REPRODUCED, LOANED, REMITTED OR USED IN ANY OTHER MANNER WITHOUT THE EXPRESS WRITTEN CONSENT OF V.W.T. V.W.T. ASSUMES NO RESPONSIBILITY OR LIABILITY FOR THE USE OF THIS DOCUMENT OR THE DESIGN CONCEPTS AND INFORMATION CONTAINED HEREIN FOR ANOTHER PROJECT, OR IN A MANNER THAT DOES NOT RELATE TO THE FITNESS OR PURPOSE OF THIS DOCUMENT. IN NO EVENT SHALL THIS DOCUMENT OR THE DESIGN CONCEPTS AND INFORMATION CONTAINED HEREIN BE USED IN A MANNER DETRIMENTAL TO THE INTEREST OF V.W.T. ALL COPYRIGHT, PATENT AND OTHER INTELLECTUAL PROPERTY RIGHTS ARE RESERVED. ACCEPTANCE OF THE DELIVERY OF THIS DOCUMENT CONSTITUTES AGREEMENT TO THESE TERMS AND CONDITIONS.

| | |
|---|---|
| DESIGNER | DATE |
| – | – |
| CHECKER | DATE |
| – | – |
| ENGINEER | DATE |
| – | – |
| SCALE: | N/A |

TITLE
# CONTROL PANEL LCP-02-300 FIELD WIRING

CLIENT
CITY OF IQALUIT

VEOLIA WATER TECHNOLOGIES CANADA INC. 4105 Sartelon, Saint-Laurent, Qc, Canada. Tel: (514) 334-7230

| PROJECT DRAWING | INTERNAL | SHEET | REV |
|---|---|---|---|
| 5000218036-EID – 0001-AU-VWT | – | 09 OF 17 | 5 |

BAR = 1" AT PLOT SCALE
REF: A6798A
STD: "B" 11x17

Mar 09, 2020 15:32:53 - G:\Projets A67XX\A6798A @ A6798D - VEOLIA - 5000218036 Iqaluit WWTP Upgrade\DOC\DESSIN\000-DRAWINGS\LCP-02-300\REV 5\5000218036-EID-0001-AU-VWT-010.dwg - sbouya

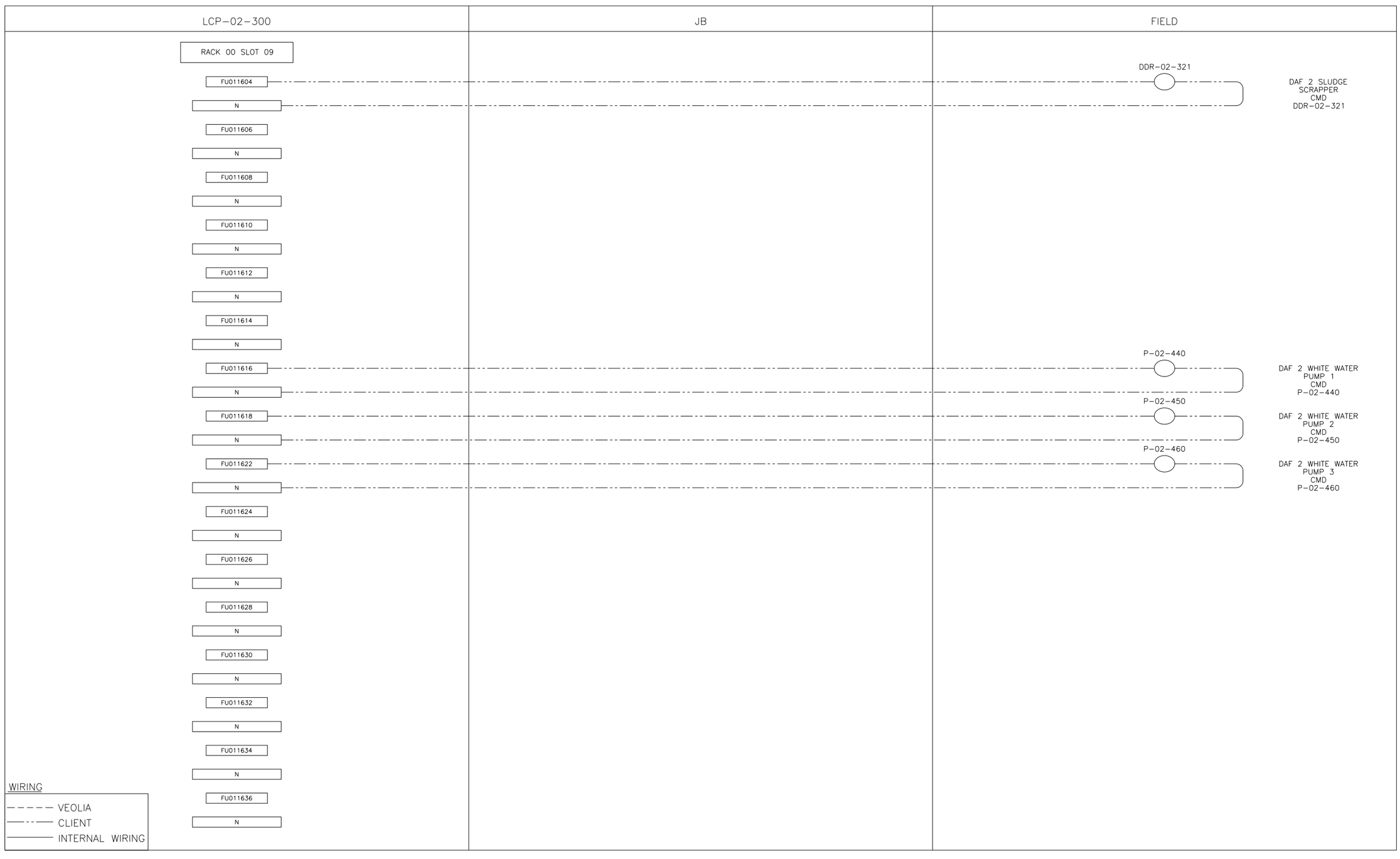


| REV | DESCRIPTION | DATE | REVD | CHKD | APVD | ECN |
|---|---|---|---|---|---|---|
| 5 | AS BUILT \|\| FIELD MODIFICATION | 2020-02-28 | SB | RA | – | – |
| 4 | AS BUILT \|\| FIELD MODIFICATION | 2019-07-29 | JC | RA | – | – |
| 3 | AS BUILT | 2019-03-27 | HZ | RA | – | – |
| 2 | FOR FABRICATION | 2019-03-19 | HZ | RA | – | – |
| 1 | FOR APPROVAL | 2019-01-03 | HZ | RA | – | – |

**CONFIDENTIALITY AND INTELLECTUAL PROPERTY NOTICE**
ALL INFORMATION CONTAINED IN THIS DOCUMENT IS THE SOLE PROPERTY OF VEOLIA WATER TECHNOLOGIES CANADA INC. AND IS PROTECTED BY ALL APPLICABLE LAWS, INCLUDING BUT NOT LIMITED TO COPYRIGHT AND OTHER INTELLECTUAL PROPERTY LAWS. THE DESIGN CONCEPTS AND INFORMATION CONTAINED HEREIN ARE PROPRIETARY TO V.W.T AND ARE SUBMITTED IN CONFIDENCE. THEY ARE NOT TRANSFERABLE. THEY MUST BE USED ONLY FOR THE PURPOSE FOR WHICH THE DOCUMENT IS EXPRESSLY SUBMITTED AND NO IMPLICIT LICENCE IS GRANTED OTHERWISE BY THE SUBMISSION OF THIS DOCUMENT. THEY ARE CONFIDENTIAL AND PRIVILEGED INFORMATION OF V.W.T. AND THEY MUST NOT BE DISCLOSED, REPRODUCED, LOANED, REMITTED OR USED IN ANY OTHER MANNER WITHOUT THE EXPRESS WRITTEN CONSENT OF V.W.T. V.W.T. ASSUMES NO RESPONSIBILITY OR LIABILITY FOR THE USE OF THIS DOCUMENT OR THE DESIGN CONCEPTS AND INFORMATION CONTAINED HEREIN FOR ANOTHER PROJECT, OR IN A MANNER THAT DOES NOT RELATE TO THE FITNESS OR PURPOSE OF THIS DOCUMENT. IN NO EVENT SHALL THIS DOCUMENT OR THE DESIGN CONCEPTS AND INFORMATION CONTAINED HEREIN BE USED IN A MANNER DETRIMENTAL TO THE INTEREST OF V.W.T. ALL COPYRIGHT, PATENT AND OTHER INTELLECTUAL PROPERTY RIGHTS ARE RESERVED. ACCEPTANCE OF THE DELIVERY OF THIS DOCUMENT CONSTITUTES AGREEMENT TO THESE TERMS AND CONDITIONS.

| | |
|---|---|
| DESIGNER | DATE |
| – | – |
| CHECKER | DATE |
| – | – |
| ENGINEER | DATE |
| – | – |
| SCALE: | N/A |

TITLE
CONTROL PANEL LCP-02-300
FIELD WIRING

CLIENT
CITY OF IQALUIT

VEOLIA
VEOLIA WATER TECHNOLOGIES CANADA INC. 4105 Sartelon, Saint-Laurent, Qc, Canada. Tel: (514) 334-7230

| PROJECT | DRAWING | INTERNAL | SHEET | REV |
|---|---|---|---|---|
| 5000218036-EID – | 0001-AU-VWT | – | 10 OF 17 | 5 |

BAR = 1" AT PLOT SCALE
REF: A6798A
STD: "B" 11x17

| LCP-02-300 | JB | FIELD |
|---|---|---|

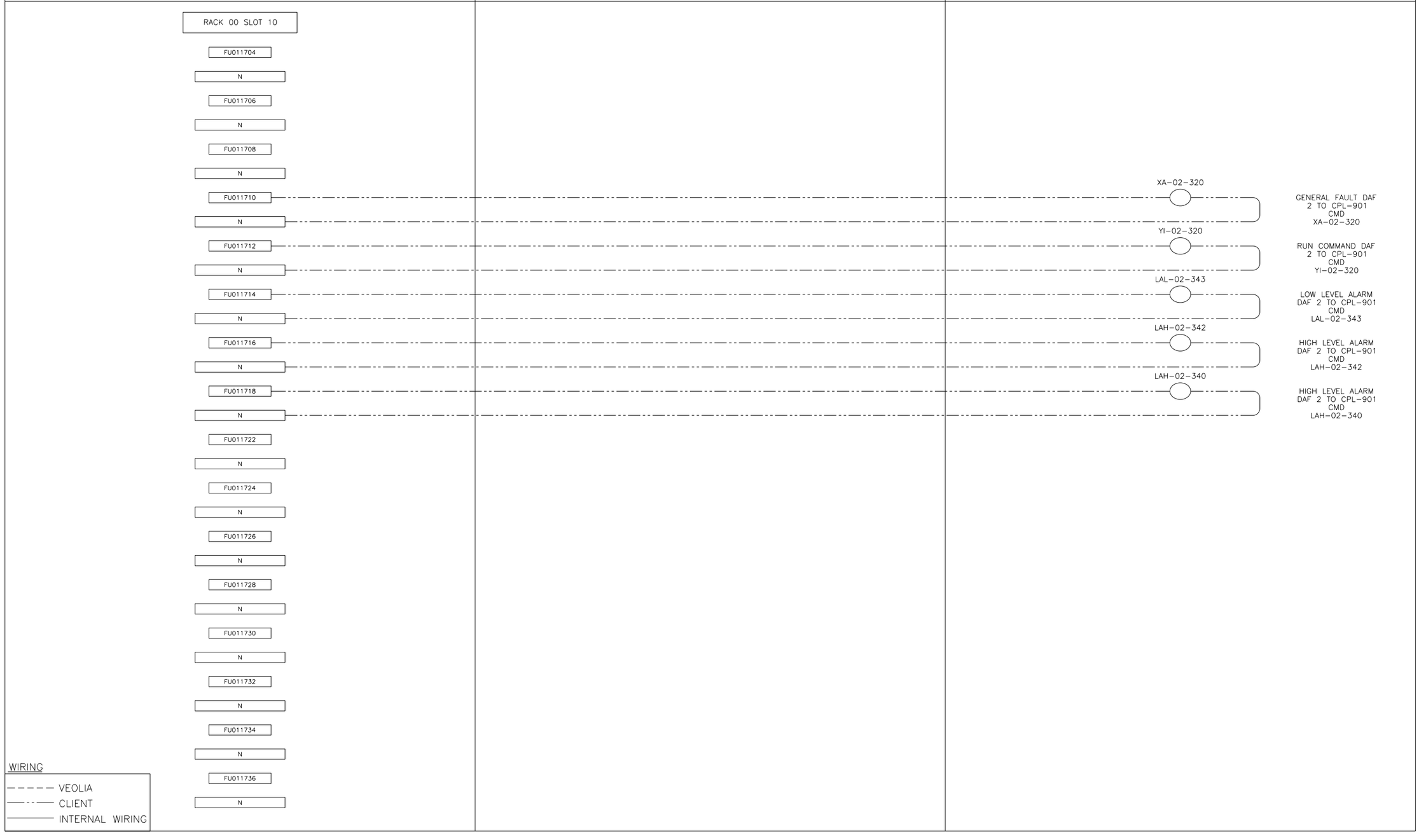


| REV | DESCRIPTION | DATE | REVD | CHKD | APVD | ECN |
|---|---|---|---|---|---|---|
| 5 | AS BUILT \|\| FIELD MODIFICATION | 2020-02-28 | SB | RA | – | – |
| 4 | AS BUILT \|\| FIELD MODIFICATION | 2019-07-29 | JC | RA | – | – |
| 3 | AS BUILT | 2019-03-27 | HZ | RA | – | – |
| 2 | FOR FABRICATION | 2019-03-19 | HZ | RA | – | – |
| 1 | FOR APPROVAL | 2019-01-03 | HZ | RA | – | – |

**CONFIDENTIALITY AND INTELLECTUAL PROPERTY NOTICE**
ALL INFORMATION CONTAINED IN THIS DOCUMENT IS THE SOLE PROPERTY OF VEOLIA WATER TECHNOLOGIES CANADA INC. AND IS PROTECTED BY ALL APPLICABLE LAWS, INCLUDING BUT NOT LIMITED TO COPYRIGHT AND OTHER INTELLECTUAL PROPERTY LAWS. THE DESIGN CONCEPTS AND INFORMATION CONTAINED HEREIN ARE PROPRIETARY TO V.W.T AND ARE SUBMITTED IN CONFIDENCE. THEY ARE NOT TRANSFERABLE. THEY MUST BE USED ONLY FOR THE PURPOSE FOR WHICH THE DOCUMENT IS EXPRESSLY SUBMITTED AND NO IMPLICIT LICENCE IS GRANTED OTHERWISE BY THE SUBMISSION OF THIS DOCUMENT. THEY ARE CONFIDENTIAL AND PRIVILEGED INFORMATION OF V.W.T. AND THEY MUST NOT BE DISCLOSED, REPRODUCED, LOANED, REMITTED OR USED IN ANY OTHER MANNER WITHOUT THE EXPRESS WRITTEN CONSENT OF V.W.T. V.W.T. ASSUMES NO RESPONSIBILITY OR LIABILITY FOR THE USE OF THIS DOCUMENT OR THE DESIGN CONCEPTS AND INFORMATION CONTAINED HEREIN FOR ANOTHER PROJECT, OR IN A MANNER THAT DOES NOT RELATE TO THE FITNESS OR PURPOSE OF THIS DOCUMENT. IN NO EVENT SHALL THIS DOCUMENT OR THE DESIGN CONCEPTS AND INFORMATION CONTAINED HEREIN BE USED IN A MANNER DETRIMENTAL TO THE INTEREST OF V.W.T. ALL COPYRIGHT, PATENT AND OTHER INTELLECTUAL PROPERTY RIGHTS ARE RESERVED. ACCEPTANCE OF THE DELIVERY OF THIS DOCUMENT CONSTITUTES AGREEMENT TO THESE TERMS AND CONDITIONS.

| | |
|---|---|
| DESIGNER | DATE |
| – | – |
| CHECKER | DATE |
| – | – |
| ENGINEER | DATE |
| – | – |
| SCALE: | N/A |

TITLE
CONTROL PANEL LCP-02-300
FIELD WIRING

CLIENT
CITY OF IQALUIT

VEOLIA
VEOLIA WATER TECHNOLOGIES CANADA INC. 4105 Sartelon, Saint-Laurent, Qc, Canada. Tel: (514) 334-7230

| PROJECT DRAWING | INTERNAL | SHEET | REV |
|---|---|---|---|
| 5000218036-EID – 0001-AU-VWT | – | 11 OF 17 | 5 |

Mar 09, 2020 15:32:53 – G:\Projets A67XX\A6798A @ A6798D – VEOLIA – 5000218036 Iqaluit WWTP Upgrade\DOC\DESSIN\000-DRAWINGS\LCP-02-300\REV 5\5000218036-EID-0001-AU-VWT-011.dwg – sbouya

BAR = 1" AT PLOT SCALE
REF: A6798A
STD: "B" 11x17

Mar 09, 2020 15:32:55 - G:\Projets A67XX\A6798A @ A6798D - VEOLIA - 5000218036 Iqaluit WWTP Upgrade\DOC\DESSIN\000-DRAWINGS\LCP-02-300\REV 5\5000218036-EID-0001-AU-VWT-012.dwg - sbouya

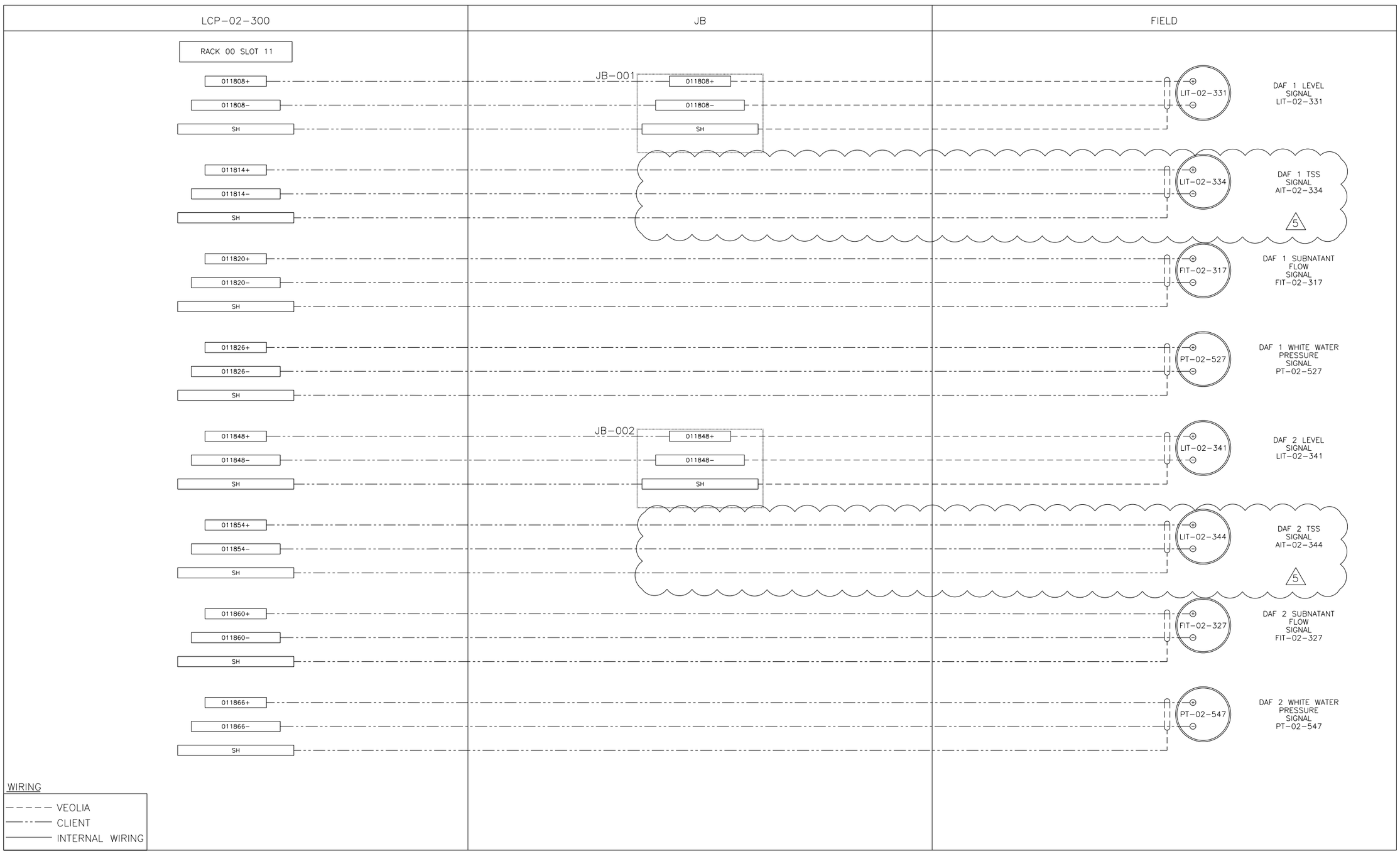


| REV | DESCRIPTION | DATE | REVD | CHKD | APVD | ECN |
|---|---|---|---|---|---|---|
| 5 | AS BUILT \|\| FIELD MODIFICATION | 2020-02-28 | SB | RA | – | – |
| 4 | AS BUILT \|\| FIELD MODIFICATION | 2019-07-29 | JC | RA | – | – |
| 3 | AS BUILT | 2019-03-27 | HZ | RA | – | – |
| 2 | FOR FABRICATION | 2019-03-19 | HZ | RA | – | – |
| 1 | FOR APPROVAL | 2019-01-03 | HZ | RA | – | – |

**CONFIDENTIALITY AND INTELLECTUAL PROPERTY NOTICE**
ALL INFORMATION CONTAINED IN THIS DOCUMENT IS THE SOLE PROPERTY OF VEOLIA WATER TECHNOLOGIES CANADA INC. AND IS PROTCIED BY ALL APPLICABLE LAWS, INCLUDING BUT NOT LIMITED TO COPYRIGHT AND OTHER INTELLECTUAL PROPERTY LAWS. THE DESIGN CONCEPTS AND INFORMATION CONTAINED HEREIN ARE PROPRIETARY TO V.W.T AND ARE SUBMITTED IN CONFIDENCE. THEY ARE NOT TRANSFERABLE. THEY MUST BE USED ONLY FOR THE PURPOSE FOR WHICH THE DOCUMENT IS EXPRESSLY SUBMITTED AND NO IMPLICIT LICENCE IS GRANTED OTHERWISE BY THE SUBMISSION OF THIS DOCUMENT. THEY ARE CONFIDENTIAL AND PRIVILEGED INFORMATION OF V.W.T. AND THEY MUST NOT BE DISCLOSED, REPRODUCED, LOANED, REMITTED OR USED IN ANY OTHER MANNER WITHOUT THE EXPRESS WRITTEN CONSENT OF V.W.T. V.W.T. ASSUMES NO RESPONSIBILITY OR LIABILITY FOR THE USE OF THIS DOCUMENT OR THE DESIGN CONCEPTS AND INFORMATION CONTAINED HEREIN FOR ANOTHER PROJECT, OR IN A MANNER THAT DOES NOT RELATE TO THE FITNESS OR PURPOSE OF THIS DOCUMENT. IN NO EVENT SHALL THIS DOCUMENT OR THE DESIGN CONCEPTS AND INFORMATION CONTAINED HEREIN BE USED IN A MANNER DETRIMENTAL TO THE INTEREST OF V.W.T. ALL COPYRIGHT, PATENT AND OTHER INTELLECTUAL PROPERTY RIGHTS ARE RESERVED. ACCEPTANCE OF THE DELIVERY OF THIS DOCUMENT CONSTITUTES AGREEMENT TO THESE TERMS AND CONDITIONS.

| | |
|---|---|
| DESIGNER | DATE |
| – | – |
| CHECKER | DATE |
| – | – |
| ENGINEER | DATE |
| – | – |
| SCALE: | N/A |

TITLE
CONTROL PANEL LCP-02-300
FIELD WIRING

CLIENT
CITY OF IQALUIT

VEOLIA
VEOLIA WATER TECHNOLOGIES CANADA INC. 4105 Sartelon, Saint-Laurent, Qc, Canada. Tel: (514) 334-7230

| PROJECT | DRAWING | INTERNAL | SHEET | REV |
|---|---|---|---|---|
| 5000218036-EID | 0001-AU-VWT | – | 12 OF 17 | 5 |

BAR = 1" AT PLOT SCALE
REF: A6798A
STD: "B" 11x17

Mar 09, 2020 15:32:57 - G:\Projets A67XX\A6798A @ A6798D - VEOLIA - 5000218036 Iqaluit WWTP Upgrade\DOC\DESSIN\000-DRAWINGS\LCP-02-300\REV 5\5000218036-EID-0001-AU-VWT-013.dwg - sbouya

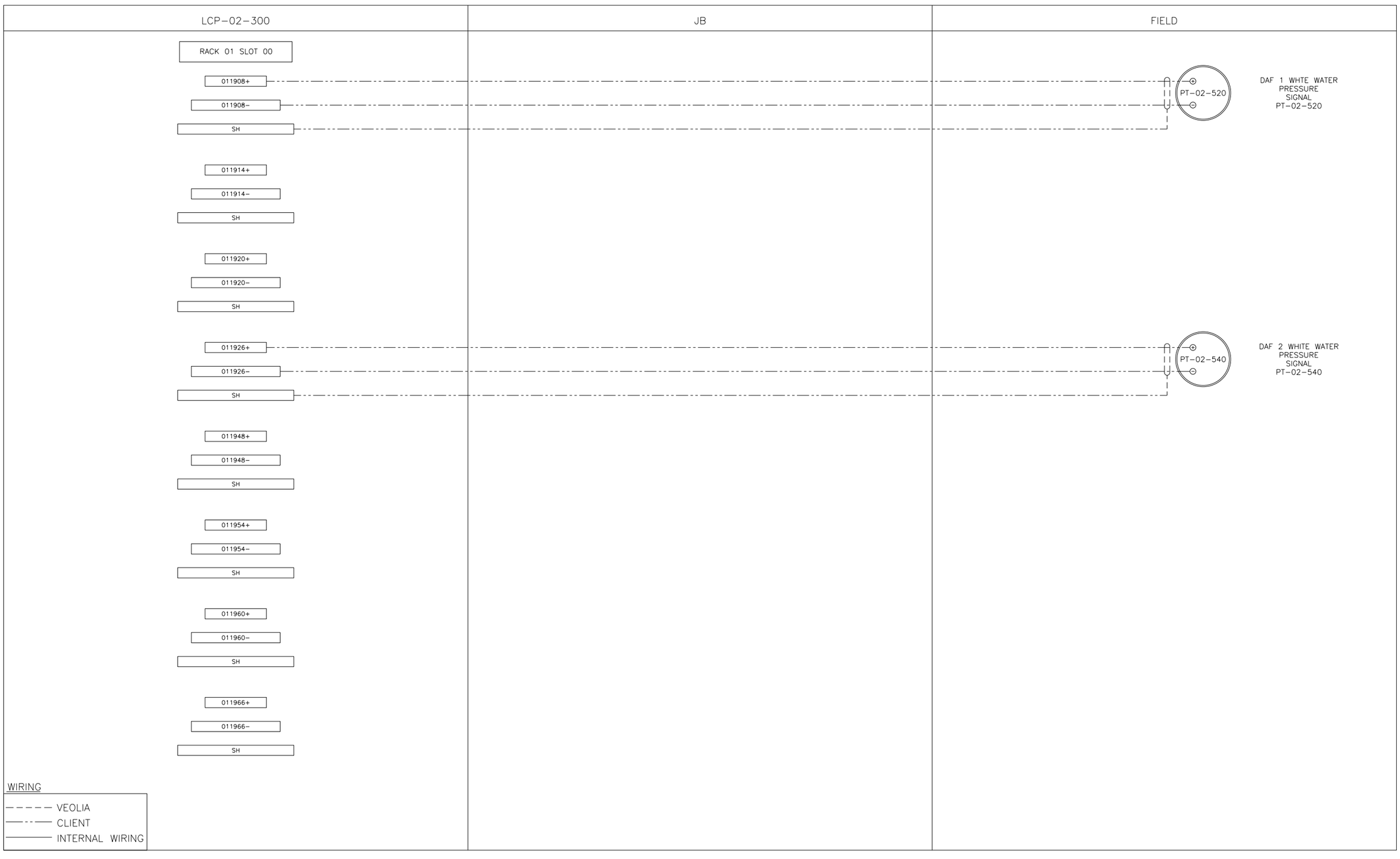


| REV | DESCRIPTION | DATE | REVD | CHKD | APVD | ECN |
|---|---|---|---|---|---|---|
| 5 | AS BUILT \|\| FIELD MODIFICATION | 2020-02-28 | SB | RA | - | - |
| 4 | AS BUILT \|\| FIELD MODIFICATION | 2019-07-29 | JC | RA | - | - |
| 3 | AS BUILT | 2019-03-27 | HZ | RA | - | - |
| 2 | FOR FABRICATION | 2019-03-19 | HZ | RA | - | - |
| 1 | FOR APPROVAL | 2019-01-03 | HZ | RA | - | - |

**CONFIDENTIALITY AND INTELLECTUAL PROPERTY NOTICE**
ALL INFORMATION CONTAINED IN THIS DOCUMENT IS THE SOLE PROPERTY OF VEOLIA WATER TECHNOLOGIES CANADA INC. AND IS PROTECTED BY ALL APPLICABLE LAWS, INCLUDING BUT NOT LIMITED TO COPYRIGHT AND OTHER INTELLECTUAL PROPERTY LAWS. THE DESIGN CONCEPTS AND INFORMATION CONTAINED HEREIN ARE PROPRIETARY TO V.W.T AND ARE SUBMITTED IN CONFIDENCE. THEY ARE NOT TRANSFERABLE. THEY MUST BE USED ONLY FOR THE PURPOSE FOR WHICH THE DOCUMENT IS EXPRESSLY SUBMITTED AND NO IMPLICIT LICENCE IS GRANTED OTHERWISE BY THE SUBMISSION OF THIS DOCUMENT. THEY ARE CONFIDENTIAL AND PRIVILEGED INFORMATION OF V.W.T. AND THEY MUST NOT BE DISCLOSED, REPRODUCED, LOANED, REMITTED OR USED IN ANY OTHER MANNER WITHOUT THE EXPRESS WRITTEN CONSENT OF V.W.T. V.W.T. ASSUMES NO RESPONSIBILITY OR LIABILITY FOR THE USE OF THIS DOCUMENT OR THE DESIGN CONCEPTS AND INFORMATION CONTAINED HEREIN FOR ANOTHER PROJECT, OR IN A MANNER THAT DOES NOT RELATE TO THE FITNESS OR PURPOSE OF THIS DOCUMENT. IN NO EVENT SHALL THIS DOCUMENT OR THE DESIGN CONCEPTS AND INFORMATION CONTAINED HEREIN BE USED IN A MANNER DETRIMENTAL TO THE INTEREST OF V.W.T. ALL COPYRIGHT, PATENT AND OTHER INTELLECTUAL PROPERTY RIGHTS ARE RESERVED. ACCEPTANCE OF THE DELIVERY OF THIS DOCUMENT CONSTITUTES AGREEMENT TO THESE TERMS AND CONDITIONS.

| | |
|---|---|
| DESIGNER | DATE |
| - | - |
| CHECKER | DATE |
| - | - |
| ENGINEER | DATE |
| - | - |
| SCALE: | N/A |

TITLE
CONTROL PANEL LCP-02-300
FIELD WIRING

CLIENT
CITY OF IQALUIT

VEOLIA
VEOLIA WATER TECHNOLOGIES CANADA INC. 4105 Sartelon, Saint-Laurent, Qc, Canada. Tel: (514) 334-7230

| PROJECT | DRAWING | INTERNAL | SHEET | REV |
|---|---|---|---|---|
| 5000218036-EID | 0001-AU-VWT | - | 13 OF 17 | 5 |

BAR = 1" AT PLOT SCALE
REF: A6798A
STD: "B" 11x17

Mar 09, 2020 15:32:58 - G:\Projets A67XX\A6798A @ A6798D - VEOLIA - 5000218036 Iqaluit WWTP Upgrade\DOC\DESSIN\000-DRAWINGS\LCP-02-300\REV 5\5000218036-EID-0001-AU-VWT-014.dwg - sbouya

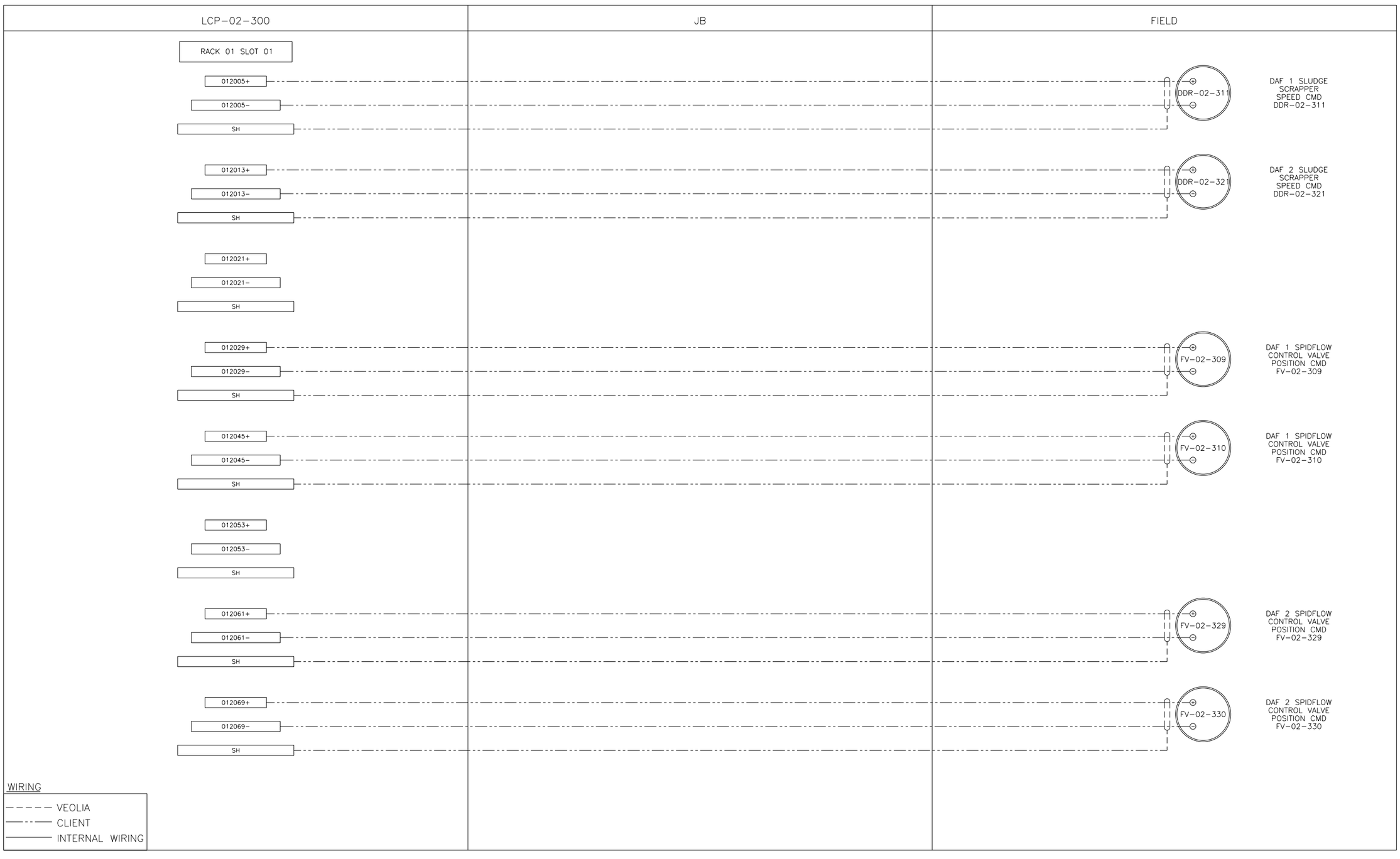


| REV | DESCRIPTION | DATE | REVD | CHKD | APVD | ECN |
|---|---|---|---|---|---|---|
| 5 | AS BUILT \|\| FIELD MODIFICATION | 2020-02-28 | SB | RA | – | – |
| 4 | AS BUILT \|\| FIELD MODIFICATION | 2019-07-29 | JC | RA | – | – |
| 3 | AS BUILT | 2019-03-27 | HZ | RA | – | – |
| 2 | FOR FABRICATION | 2019-03-19 | HZ | RA | – | – |
| 1 | FOR APPROVAL | 2019-01-03 | HZ | RA | – | – |

**CONFIDENTIALITY AND INTELLECTUAL PROPERTY NOTICE**
ALL INFORMATION CONTAINED IN THIS DOCUMENT IS THE SOLE PROPERTY OF VEOLIA WATER TECHNOLOGIES CANADA INC. AND IS PROTCIED BY ALL APPLICABLE LAWS, INCLUDING BUT NOT LIMITED TO COPYRIGHT AND OTHER INTELLECTUAL PROPERTY LAWS. THE DESIGN CONCEPTS AND INFORMATION CONTAINED HEREIN ARE PROPRIETARY TO V.W.T AND ARE SUBMITTED IN CONFIDENCE. THEY ARE NOT TRANSFERABLE. THEY MUST BE USED ONLY FOR THE PURPOSE FOR WHICH THE DOCUMENT IS EXPRESSLY SUBMITTED AND NO IMPLICIT LICENCE IS GRANTED OTHERWISE BY THE SUBMISSION OF THIS DOCUMENT. THEY ARE CONFIDENTIAL AND PRIVILEGED INFORMATION OF V.W.T. AND THEY MUST NOT BE DISCLOSED, REPRODUCED, LOANED, REMITTED OR USED IN ANY OTHER MANNER WITHOUT THE EXPRESS WRITTEN CONSENT OF V.W.T. V.W.T. ASSUMES NO RESPONSIBILITY OR LIABILITY FOR THE USE OF THIS DOCUMENT OR THE DESIGN CONCEPTS AND INFORMATION CONTAINED HEREIN FOR ANOTHER PROJECT, OR IN A MANNER THAT DOES NOT RELATE TO THE FITNESS OR PURPOSE OF THIS DOCUMENT. IN NO EVENT SHALL THIS DOCUMENT OR THE DESIGN CONCEPTS AND INFORMATION CONTAINED HEREIN BE USED IN A MANNER DETRIMENTAL TO THE INTEREST OF V.W.T. ALL COPYRIGHT, PATENT AND OTHER INTELLECTUAL PROPERTY RIGHTS ARE RESERVED. ACCEPTANCE OF THE DELIVERY OF THIS DOCUMENT CONSTITUTES AGREEMENT TO THESE TERMS AND CONDITIONS.

| | |
|---|---|
| DESIGNER | DATE |
| – | – |
| CHECKER | DATE |
| – | – |
| ENGINEER | DATE |
| – | – |
| SCALE: | N/A |

TITLE
CONTROL PANEL LCP-02-300
FIELD WIRING

CLIENT
CITY OF IQALUIT

VEOLIA
VEOLIA WATER TECHNOLOGIES CANADA INC. 4105 Sartelon, Saint-Laurent, Qc, Canada. Tel: (514) 334-7230

| PROJECT | DRAWING | INTERNAL | SHEET | REV |
|---|---|---|---|---|
| 5000218036-EID – | 0001-AU-VWT | – | 14 OF 17 | 5 |

Mar 09, 2020 15:33:00 - G:\Projets A67XX\A6798A @ A6798D - VEOLIA - 5000218036 Iqaluit WWTP
Upgrade\DOC\DESSIN\000-DRAWINGS\LCP-02-300\REV 5\5000218036-EID-0001-AU-VWT-015.dwg - sbouya

BAR = 1" AT PLOT SCALE

REF: A6798A

STD: "B" 11x17

| LCP-02-300 | JB | FIELD |
|---|---|---|
| RACK 01 SLOT 02 | | |
| 012105+ | | |
| 012105- | | |
| SH | | |
| 012113+ | | |
| 012113- | | |
| SH | | |
| 012121+ | | |
| 012121- | | |
| SH | | |
| 012129+ | | |
| 012129- | | |
| SH | | |
| 012145+ | | |
| 012145- | | |
| SH | | |
| 012153+ | | |
| 012153- | | |
| SH | | |
| 012161+ | | |
| 012161- | | |
| SH | | |
| 012169+ | | |
| 012169- | | |
| SH | | |

WIRING

- - - - - VEOLIA
—·—·— CLIENT
——— INTERNAL WIRING

| REV | DESCRIPTION | DATE | REVD | CHKD | APVD | ECN |
|---|---|---|---|---|---|---|
| 5 | AS BUILT \|\| FIELD MODIFICATION | 2020-02-28 | SB | RA | - | - |
| 4 | AS BUILT \|\| FIELD MODIFICATION | 2019-07-29 | JC | RA | - | - |
| 3 | AS BUILT | 2019-03-27 | HZ | RA | - | - |
| 2 | FOR FABRICATION | 2019-03-19 | HZ | RA | - | - |
| 1 | FOR APPROVAL | 2019-01-03 | HZ | RA | - | - |

**CONFIDENTIALITY AND INTELLECTUAL PROPERTY NOTICE**
ALL INFORMATION CONTAINED IN THIS DOCUMENT IS THE SOLE PROPERTY OF VEOLIA WATER TECHNOLOGIES CANADA INC. AND IS PROTECTED BY ALL APPLICABLE LAWS, INCLUDING BUT NOT LIMITED TO COPYRIGHT AND OTHER INTELLECTUAL PROPERTY LAWS. THE DESIGN CONCEPTS AND INFORMATION CONTAINED HEREIN ARE PROPRIETARY TO V.W.T AND ARE SUBMITTED IN CONFIDENCE. THEY ARE NOT TRANSFERABLE. THEY MUST BE USED ONLY FOR THE PURPOSE FOR WHICH THE DOCUMENT IS EXPRESSLY SUBMITTED AND NO IMPLICIT LICENCE IS GRANTED OTHERWISE BY THE SUBMISSION OF THIS DOCUMENT. THEY ARE CONFIDENTIAL AND PRIVILEGED INFORMATION OF V.W.T. AND THEY MUST NOT BE DISCLOSED, REPRODUCED, LOANED, REMITTED OR USED IN ANY OTHER MANNER WITHOUT THE EXPRESS WRITTEN CONSENT OF V.W.T. V.W.T. ASSUMES NO RESPONSIBILITY OR LIABILITY FOR THE USE OF THIS DOCUMENT OR THE DESIGN CONCEPTS AND INFORMATION CONTAINED HEREIN FOR ANOTHER PROJECT, OR IN A MANNER THAT DOES NOT RELATE TO THE FITNESS OR PURPOSE OF THIS DOCUMENT. IN NO EVENT SHALL THIS DOCUMENT OR THE DESIGN CONCEPTS AND INFORMATION CONTAINED HEREIN BE USED IN A MANNER DETRIMENTAL TO THE INTEREST OF V.W.T. ALL COPYRIGHT, PATENT AND OTHER INTELLECTUAL PROPERTY RIGHTS ARE RESERVED. ACCEPTANCE OF THE DELIVERY OF THIS DOCUMENT CONSTITUTES AGREEMENT TO THESE TERMS AND CONDITIONS.

| DESIGNER | DATE |
|---|---|
| - | - |
| CHECKER | DATE |
| - | - |
| ENGINEER | DATE |
| - | - |
| SCALE: N/A | |

TITLE
CONTROL PANEL LCP-02-300
FIELD WIRING

CLIENT
CITY OF IQALUIT

VEOLIA
VEOLIA WATER TECHNOLOGIES CANADA INC. 4105 Sartelon, Saint-Laurent, Qc, Canada. Tel: (514) 334-7230

| PROJECT | DRAWING | INTERNAL | SHEET | REV |
|---|---|---|---|---|
| 5000218036-EID | 0001-AU-VWT | - | 15 OF 17 | 5 |

BAR = 1" AT PLOT SCALE
REF: A6798A
STD: "B" 11x17

Mar 09, 2020 15:33:02 - G:\Projets A67XX\A6798A @ A6798D - VEOLIA - 5000218036 Iqaluit WWTP Upgrade\DOC\DESSIN\000-DRAWINGS\LCP-02-300\REV 5\5000218036-EID-0001-AU-VWT-016.dwg - sbouya

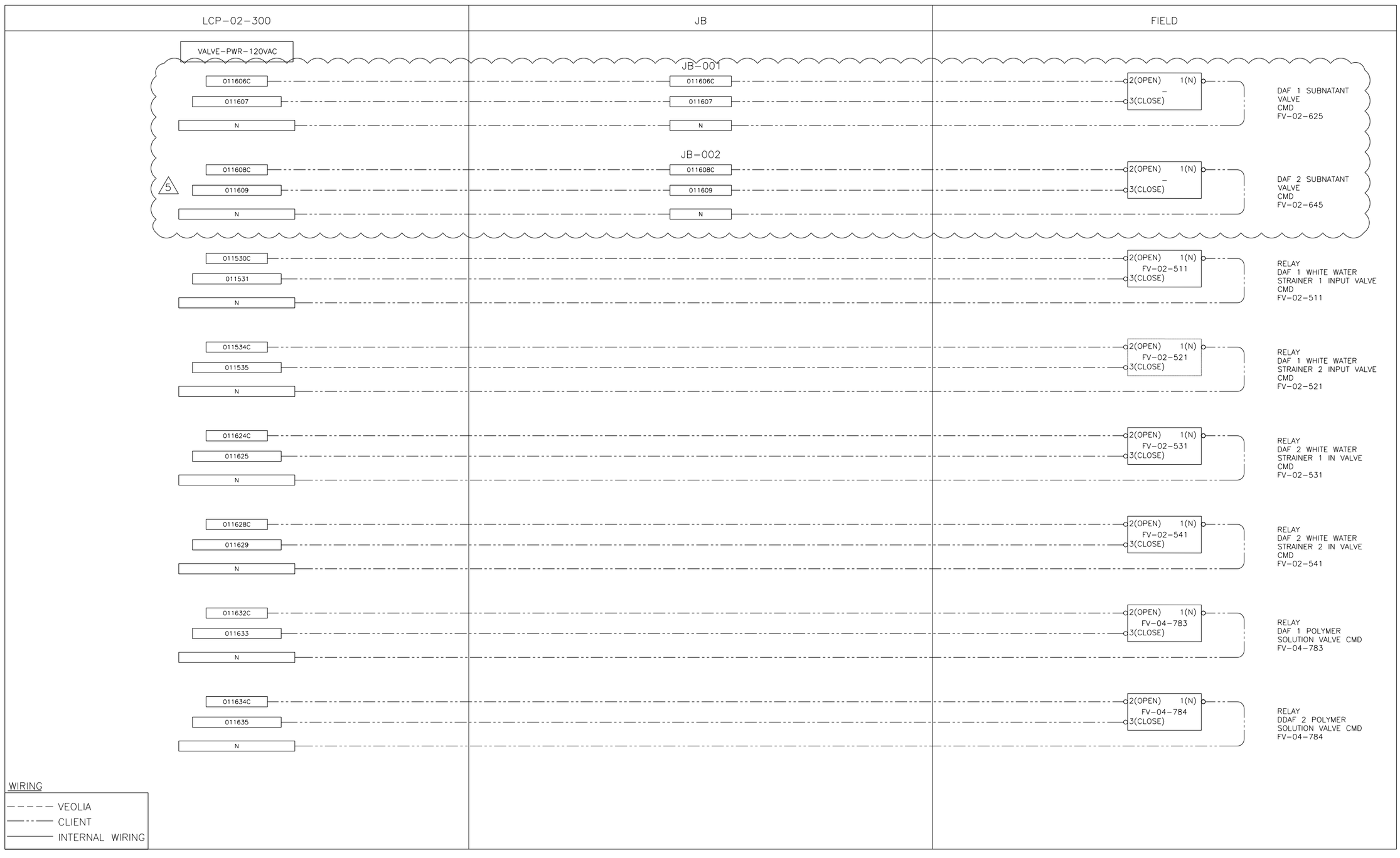


| REV | DESCRIPTION | DATE | REVD | CHKD | APVD | ECN |
|---|---|---|---|---|---|---|
| 5 | AS BUILT \|\| FIELD MODIFICATION | 2020-02-28 | SB | RA | – | – |
| 4 | AS BUILT \|\| FIELD MODIFICATION | 2019-07-29 | JC | RA | – | – |
| 3 | AS BUILT | 2019-03-27 | HZ | RA | – | – |
| 2 | FOR FABRICATION | 2019-03-19 | HZ | RA | – | – |
| 1 | FOR APPROVAL | 2019-01-03 | HZ | RA | – | – |

**CONFIDENTIALITY AND INTELLECTUAL PROPERTY NOTICE**
ALL INFORMATION CONTAINED IN THIS DOCUMENT IS THE SOLE PROPERTY OF VEOLIA WATER TECHNOLOGIES CANADA INC. AND IS PROTECTED BY ALL APPLICABLE LAWS, INCLUDING BUT NOT LIMITED TO COPYRIGHT AND OTHER INTELLECTUAL PROPERTY LAWS. THE DESIGN CONCEPTS AND INFORMATION CONTAINED HEREIN ARE PROPRIETARY TO V.W.T AND ARE SUBMITTED IN CONFIDENCE. THEY ARE NOT TRANSFERABLE. THEY MUST BE USED ONLY FOR THE PURPOSE FOR WHICH THE DOCUMENT IS EXPRESSLY SUBMITTED AND NO IMPLICIT LICENCE IS GRANTED OTHERWISE BY THE SUBMISSION OF THIS DOCUMENT. THEY ARE CONFIDENTIAL AND PRIVILEGED INFORMATION OF V.W.T. AND THEY MUST NOT BE DISCLOSED, REPRODUCED, LOANED, REMITTED OR USED IN ANY OTHER MANNER WITHOUT THE EXPRESS WRITTEN CONSENT OF V.W.T. V.W.T. ASSUMES NO RESPONSIBILITY OR LIABILITY FOR THE USE OF THIS DOCUMENT OR THE DESIGN CONCEPTS AND INFORMATION CONTAINED HEREIN FOR ANOTHER PROJECT, OR IN A MANNER THAT DOES NOT RELATE TO THE FITNESS OR PURPOSE OF THIS DOCUMENT. IN NO EVENT SHALL THIS DOCUMENT OR THE DESIGN CONCEPTS AND INFORMATION CONTAINED HEREIN BE USED IN A MANNER DETRIMENTAL TO THE INTEREST OF V.W.T. ALL COPYRIGHT, PATENT AND OTHER INTELLECTUAL PROPERTY RIGHTS ARE RESERVED. ACCEPTANCE OF THE DELIVERY OF THIS DOCUMENT CONSTITUTES AGREEMENT TO THESE TERMS AND CONDITIONS.

| | |
|---|---|
| DESIGNER | DATE |
| – | – |
| CHECKER | DATE |
| – | – |
| ENGINEER | DATE |
| – | – |
| SCALE: | N/A |

TITLE
CONTROL PANEL LCP-02-300
FIELD WIRING

CLIENT
CITY OF IQALUIT

VEOLIA
VEOLIA WATER TECHNOLOGIES CANADA INC. 4105 Sartelon, Saint-Laurent, Qc, Canada. Tel: (514) 334-7230

| PROJECT DRAWING | INTERNAL | SHEET | REV |
|---|---|---|---|
| 5000218036-EID – 0001-AU-VWT | – | 16 OF 17 | 5 |

BAR = 1" AT PLOT SCALE
REF: A6798A
STD: "B" 11x17

Mar 09, 2020 15:33:03 - G:\Projets A67XX\A6798A @ A6798D - VEOLIA - 5000218036 Iqaluit WWTP Upgrade\DOC\DESSIN\000-DRAWINGS\LCP-02-300\REV 5\5000218036-EID-0001-AU-VWT-017.dwg - sbouya

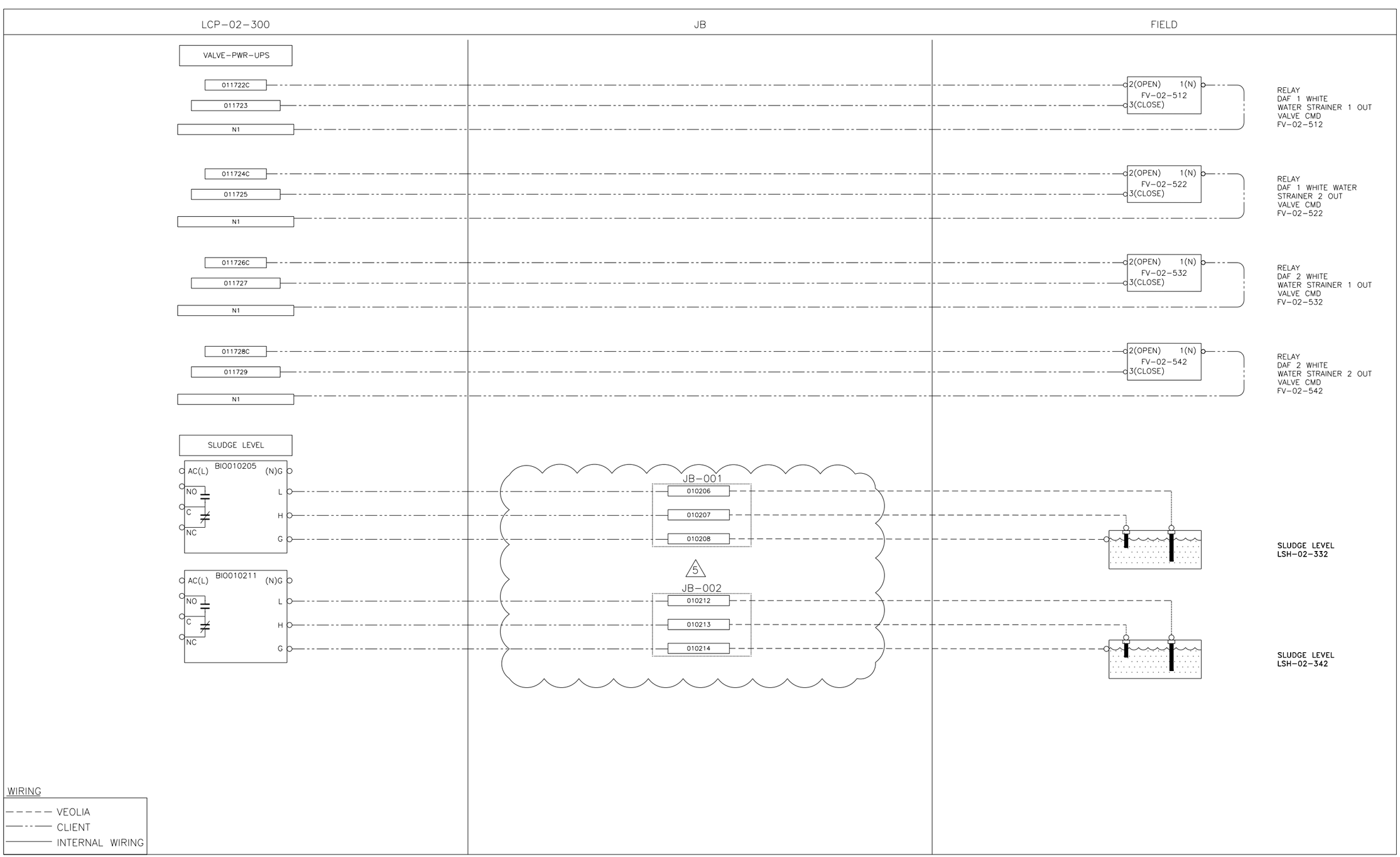


| REV | DESCRIPTION | DATE | REVD | CHKD | APVD | ECN |
|---|---|---|---|---|---|---|
| 5 | AS BUILT \|\| FIELD MODIFICATION | 2020-02-28 | SB | RA | – | – |
| 4 | AS BUILT \|\| FIELD MODIFICATION | 2019-07-29 | JC | RA | – | – |
| 3 | AS BUILT | 2019-03-27 | HZ | RA | – | – |
| 2 | FOR FABRICATION | 2019-03-19 | HZ | RA | – | – |
| 1 | FOR APPROVAL | 2019-01-03 | HZ | RA | – | – |

**CONFIDENTIALITY AND INTELLECTUAL PROPERTY NOTICE**
ALL INFORMATION CONTAINED IN THIS DOCUMENT IS THE SOLE PROPERTY OF VEOLIA WATER TECHNOLOGIES CANADA INC. AND IS PROTECTED BY ALL APPLICABLE LAWS, INCLUDING BUT NOT LIMITED TO COPYRIGHT AND OTHER INTELLECTUAL PROPERTY LAWS. THE DESIGN CONCEPTS AND INFORMATION CONTAINED HEREIN ARE PROPRIETARY TO V.W.T AND ARE SUBMITTED IN CONFIDENCE. THEY ARE NOT TRANSFERABLE. THEY MUST BE USED ONLY FOR THE PURPOSE FOR WHICH THE DOCUMENT IS EXPRESSLY SUBMITTED AND NO IMPLICIT LICENCE IS GRANTED OTHERWISE BY THE SUBMISSION OF THIS DOCUMENT. THEY ARE CONFIDENTIAL AND PRIVILEGED INFORMATION OF V.W.T. AND THEY MUST NOT BE DISCLOSED, REPRODUCED, LOANED, REMITTED OR USED IN ANY OTHER MANNER WITHOUT THE EXPRESS WRITTEN CONSENT OF V.W.T. V.W.T. ASSUMES NO RESPONSIBILITY OR LIABILITY FOR THE USE OF THIS DOCUMENT OR THE DESIGN CONCEPTS AND INFORMATION CONTAINED HEREIN FOR ANOTHER PROJECT, OR IN A MANNER THAT DOES NOT RELATE TO THE FITNESS OR PURPOSE OF THIS DOCUMENT. IN NO EVENT SHALL THIS DOCUMENT OR THE DESIGN CONCEPTS AND INFORMATION CONTAINED HEREIN BE USED IN A MANNER DETRIMENTAL TO THE INTEREST OF V.W.T. ALL COPYRIGHT, PATENT AND OTHER INTELLECTUAL PROPERTY RIGHTS ARE RESERVED. ACCEPTANCE OF THE DELIVERY OF THIS DOCUMENT CONSTITUTES AGREEMENT TO THESE TERMS AND CONDITIONS.

| | |
|---|---|
| DESIGNER | DATE |
| – | – |
| CHECKER | DATE |
| – | – |
| ENGINEER | DATE |
| – | – |
| SCALE: | N/A |

TITLE
CONTROL PANEL LCP-02-300
FIELD WIRING

CLIENT
CITY OF IQALUIT

VEOLIA
VEOLIA WATER TECHNOLOGIES CANADA INC. 4105 Sartelon, Saint-Laurent, Qc, Canada. Tel: (514) 334-7230

| PROJECT DRAWING | INTERNAL | SHEET | REV |
|---|---|---|---|
| 5000218036-EID – 0001-AU-VWT | – | 17 OF 17 | 5 |

# WWTP UPGRADE
# CITY OF IQALUIT
# CONTROL JUNCTION BOX
# JB-001 SPIDFLOW T-02 310
# PROJECT: 5000218036

| REV | DESCRIPTION | DATE | REVD | CHKD | APVD | ECN |
|---|---|---|---|---|---|---|
| 5 | AS BUIILT \|\| FIELD MODIFICATION | 2020-03-05 | SB | RA | – | – |
| 4 | AS BUIILT \|\| FIELD MODIFICATION | 2019-07-29 | JC | RA | – | – |
| 3 | AS BUILT | 2019-03-26 | HZ | RA | – | – |
| 2 | FOR FABRICATION | 2019-03-15 | MR | RA | – | – |
| 1 | FOR APPROVAL | 2019-01-09 | HZ | RA | – | – |

**CONFIDENTIALITY AND INTELLECTUAL PROPERTY NOTICE**
ALL INFORMATION CONTAINED IN THIS DOCUMENT IS THE SOLE PROPERTY OF VEOLIA WATER TECHNOLOGIES CANADA INC. AND IS PROTCEID BY ALL APPLICABLE LWS, INCLUDING BUT NOT LMIED TO COPRIGHT AND OTHER INTELLECTUAL PROPERTY LAWS. THE DESIGN CONCEPTS AND INFORMATION CONTAINED HEREIN ARE PROPRIETARY TO V.W.T AND ARE SUBMITTED IN CONFIDENCE. THEY ARE NOT TRANSFERABLE. THEY MUST BE USED ONLY FOR THE PURPOSE FOR WHICH THE DOCUMENT IS EXPRESSLY SUBMITTED AND NO IMPLICIT LICENCE IS GRANTED OTHERWISE BY THE SUBMISSION OF THIS DOCUMENT. THEY ARE CONFIDENTIAL AND PRIVILEGED INFORMATION OF V.W.T. AND THEY MUST NOT BE DISCLOSED, REPRODUCED, LOANED, REMITTED OR USED IN ANY OTHER MANNER WITHOUT THE EXPRESS WRITTEN CONSENT OF V.W.T. V.W.T. ASSUMES NO RESPONSIBILITY OR LIABILITY FOR THE USE OF THIS DOCUMENT OR THE DESIGN CONCEPTS AND INFORMATION CONTAINED HEREIN FOR ANOTHER PROJECT, OR IN A MANNER THAT DOES NOT RELATE TO THE FITNESS OR PURPOSE OF THIS DOCUMENT. IN NO EVENT SHALL THIS DOCUMENT OR THE DESIGN CONCEPTS AND INFORMATION CONTAINED HEREIN BE USED IN A MANNER DETRIMENTAL TO THE INTEREST OF V.W.T. ALL COPYRIGHT, PATENT AND OTHER INTELLECTUAL PROPERTY RIGHTS ARE RESERVED. ACCEPTANCE OF THE DELIVERY OF THIS DOCUMENT CONSTITUTES AGREEMENT TO THESE TERMS AND CONDITIONS.

| | |
|---|---|
| DESIGNER | DATE – |
| CHECKER | DATE – |
| ENGINEER | DATE – |
| SCALE: | N/A |

TITLE: JB-001 SPIDFLOW T-02 310
CONTROL JUNCTION BOX
TITLE PAGE

CLIENT: WWTP UPGRADE
CITY OF IQALUIT

VEOLIA
VEOLIA WATER TECHNOLOGIES CANADA INC. 4105 Sartelon, Saint-Laurent, Qc, Canada. Tel: (514) 334-7230

| PROJECT / DRAWING | INTERNAL | SHEET | REV |
|---|---|---|---|
| 5000218036-EPL – 0002-AU-VWT | – | 01 OF 05 | 5 |

BAR = 1" AT PLOT SCALE
REF: A6798A
STD: "B" 11x17
Mar 09, 2020 16:09:19 – G:\Projets A67XX\A6798A @ A6798D – VEOLIA – 5000218036 Iqaluit WWTP Upgrade\DOC\DESSIN\000-DRAWINGS\JB-001\REV5\5000218036-EPL-0002-AU-VWT-001.dwg – sbouya

DRAWING LIST

| DESCRIPTION | DRAWING NUMBER |
|---|---|
| CONTROL JUNCTION BOX JB-001 | |
| TITLE PAGE | 5000218036-EPL-0002-AU-VWT-001 |
| LEGEND & DRAWING LIST | 5000218036-EPL-0002-AU-VWT-002 |
| EXTERNAL & INTERNAL LAYOUT | 5000218036-EPL-0002-AU-VWT-003 |
| BILL OF MATERIAL | 5000218036-EPL-0002-AU-VWT-004 |
| TERMINAL LAYOUT | 5000218036-EPL-0002-AU-VWT-005 |
| FIELD WIRING | 5000218036-EID-0002-AU-VWT-001 |
| FIELD WIRING | 5000218036-EID-0002-AU-VWT-002 |

LEGEND

LOW PRESSURE
HIGH PRESSURE
LOW LEVEL
HIGH LEVEL
LIMIT SWITCH
LIMIT SWITCH
LOW FLOW
HIGH FLOW
RELAY CONTACT
RELAY CONTACT
RELAY CONTACT
ON DELAY TIMER
OFF DELAY TIMER
GROUND
ISOLATED GROUND
FUSE (POWER)
FUSE (CONTROL)
DISTRIBUTION BLOCK

MAINTAINED TWO SELECTOR SWITCH
MAINTAINED 3 POSITIONS SELECTOR SWITCH
SPRING RETURN FROM LEFT 3 POSITIONS SELECTOR SWITCH
SPRING RETURN FROM RIGHT 3 POSITIONS SELECTOR SWITCH
SPRING RETURN FROM BOTH 3 POSITIONS SELECTOR SWITCH
PUSH BUTTON
PUSH BUTTON
PULL BUTTON
PULL BUTTON
EMERGENCY STOP BUTTON
POTENTIOMETER
CURRENT TRANSFORMER
THERMOSTAT
THERMOSTAT
1 POLE CIRCUIT BREAKER

COOLING FAN
RECEPTACLE 120VAC WITH RJ45
RECEPTACLE 120VAC DUPLEX
PILOT LIGHT
PUSH TO TEST PILOT LIGHT
RELAY COIL
RELAY COIL WITH SURGE SUPPRESSOR
CONTACTOR COIL
CONTACTOR COIL WITH SURGE SUPPRESSOR
ALARM
RESISTOR
SOLENOID
PULL CORD
ZERO SPEED DETECTOR

POWER BLOCK FOR FIELD WIRING
TERMINAL
WIRING JUNCTION
KNIFE TERMINAL

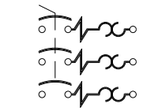
3 POLES THERMAL MAGNETIC CIRCUIT BREAKER

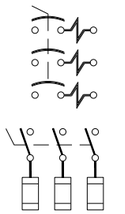
3 POLES MAGNETIC CIRCUIT BREAKER


3 POLES FUSIBLE DISCONNECT SWITCH

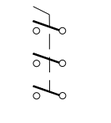
3 POLES DISCONNECT SWITCH

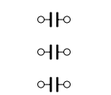
3 POLES CONTACTOR


3 POLES OVERLOAD RELAY

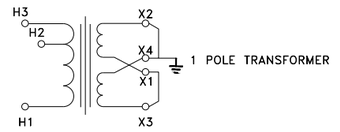

1 POLE TRANSFORMER

WIRE COLOR CODE

| MINIMAL 18AWG GAUGE | |
|---|---|
| | |
| POWER 120VAC | BLACK |
| CONTROL 120VAC | RED |
| NEUTRAL | WHITE |
| 24VDC | BLUE |
| 0VDC | BLUE/WHITE |
| DRY CONTRACT | YELLOW, 14AWG |
| NON-ISOLATED GROUND | GREEN |
| ISOLATED GROUND | GREEN/YELLOW |
| TWISTED PAIR | (+) BLACK & (-) WHITE |

| REV | DESCRIPTION | DATE | REVD | CHKD | APVD | ECN |
|---|---|---|---|---|---|---|
| 5 | AS BUIILT \|\| FIELD MODIFICATION | 2020-03-05 | SB | RA | - | - |
| 4 | AS BUIILT \|\| FIELD MODIFICATION | 2019-07-29 | JC | RA | - | - |
| 3 | AS BUILT | 2019-03-26 | HZ | RA | - | - |
| 2 | FOR FABRICATION | 2019-03-15 | MR | RA | - | - |
| 1 | FOR APPROVAL | 2019-01-09 | HZ | RA | - | - |

**CONFIDENTIALITY AND INTELLECTUAL PROPERTY NOTICE**
ALL INFORMATION CONTAINED IN THIS DOCUMENT IS THE SOLE PROPERTY OF VEOLIA WATER TECHNOLOGIES CANADA INC. AND IS PROTECTED BY ALL APPLICABLE LAWS, INCLUDING BUT NOT LIMITED TO COPYRIGHT AND OTHER INTELLECTUAL PROPERTY LAWS. THE DESIGN CONCEPTS AND INFORMATION CONTAINED HEREIN ARE PROPRIETARY TO V.W.T AND ARE SUBMITTED IN CONFIDENCE. THEY ARE NOT TRANSFERABLE. THEY MUST BE USED ONLY FOR THE PURPOSE FOR WHICH THE DOCUMENT IS EXPRESSLY SUBMITTED AND NO IMPLICIT LICENCE IS GRANTED OTHERWISE BY THE SUBMISSION OF THIS DOCUMENT. THEY ARE CONFIDENTIAL AND PRIVILEGED INFORMATION OF V.W.T. AND THEY MUST NOT BE DISCLOSED, REPRODUCED, LOANED, REMITTED OR USED IN ANY OTHER MANNER WITHOUT THE EXPRESS WRITTEN CONSENT OF V.W.T. V.W.T. ASSUMES NO RESPONSIBILITY OR LIABILITY FOR THE USE OF THIS DOCUMENT OR THE DESIGN CONCEPTS AND INFORMATION CONTAINED HEREIN FOR ANOTHER PROJECT, OR IN A MANNER THAT DOES NOT RELATE TO THE FITNESS OR PURPOSE OF THIS DOCUMENT. IN NO EVENT SHALL THIS DOCUMENT OR THE DESIGN CONCEPTS AND INFORMATION CONTAINED HEREIN BE USED IN A MANNER DETRIMENTAL TO THE INTEREST OF V.W.T. ALL COPYRIGHT, PATENT AND OTHER INTELLECTUAL PROPERTY RIGHTS ARE RESERVED. ACCEPTANCE OF THE DELIVERY OF THIS DOCUMENT CONSTITUTES AGREEMENT TO THESE TERMS AND CONDITIONS.

| | |
|---|---|
| DESIGNER | DATE |
| - | - |
| CHECKER | DATE |
| - | - |
| ENGINEER | DATE |
| - | - |
| SCALE: | N/A |

TITLE: JB-001 SPIDFLOW T-02 310
CONTROL JUNCTION BOX
LEGEND & DRAWING LIST

CLIENT: WWTP UPGRADE
CITY OF IQALUIT

VEOLIA
VEOLIA WATER TECHNOLOGIES CANADA INC. 4105 Sartelon, Saint-Laurent, Qc, Canada. Tel: (514) 334-7230

| PROJECT | DRAWING | INTERNAL | SHEET | REV |
|---|---|---|---|---|
| 5000218036-EPL | 0002-AU-VWT | - | 02 OF 05 | 5 |

BAR = 1" AT PLOT SCALE
REF: A6798A
STD: "B" 11x17

Mar 09, 2020 16:09:20 - G:\Projets A67XX\A6798A @ A6798D - VEOLIA - 5000218036 Iqaluit WWTP Upgrade\DOC\DESSIN\000-DRAWINGS\JB-001\REV5\5000218036-EPL-0002-AU-VWT-002.dwg - sbouya

ENCLOSURE NEMA 4X–FIERGLASS / 14H'' X 12W'' X 6D'' (PJ14126RL)
cUL APPROVAL

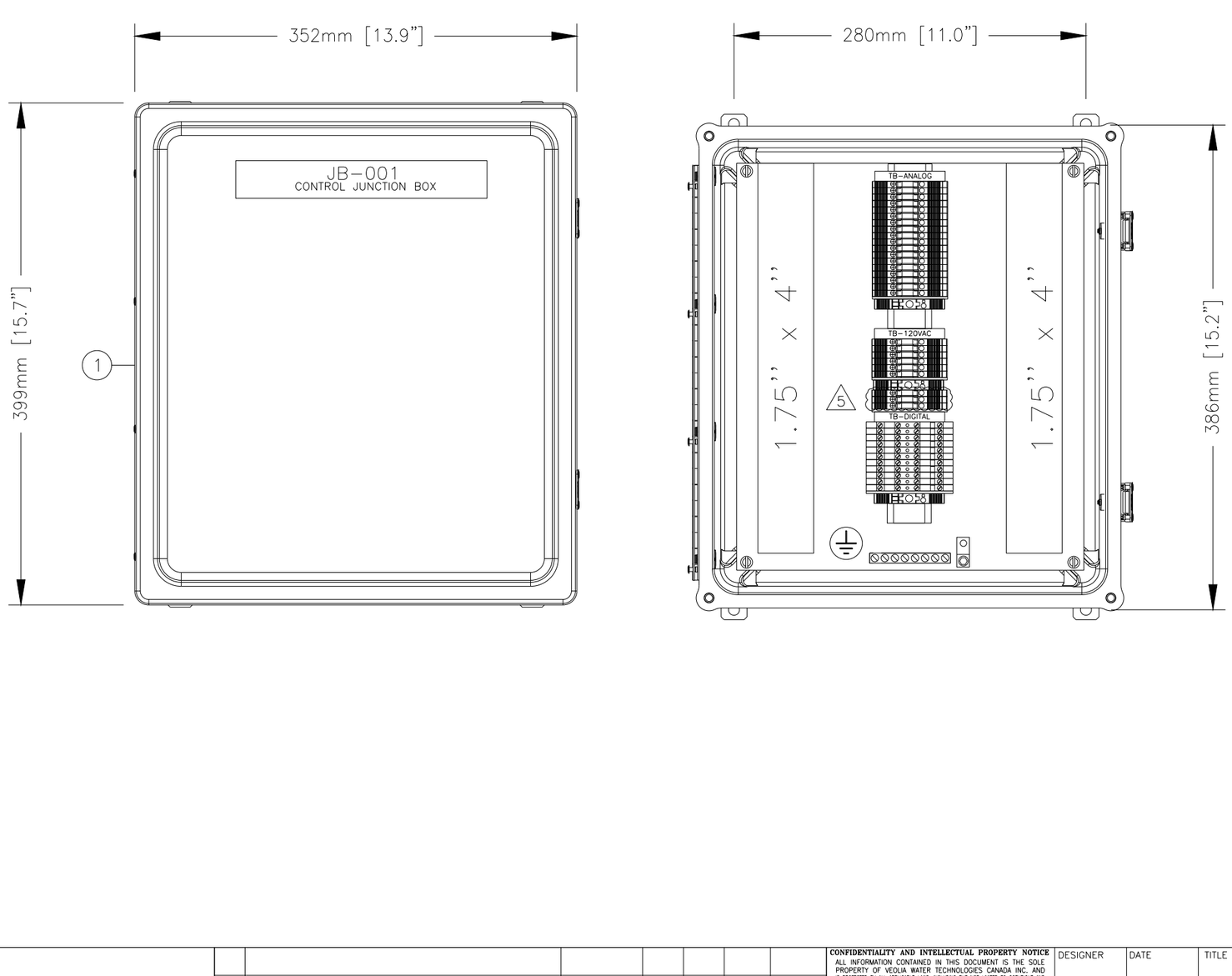


| REV | DESCRIPTION | DATE | REVD | CHKD | APVD | ECN |
|---|---|---|---|---|---|---|
| 5 | AS BUIILT || FIELD MODIFICATION | 2020–03–05 | SB | RA | – | – |
| 4 | AS BUIILT || FIELD MODIFICATION | 2019–07–29 | JC | RA | – | – |
| 3 | AS BUILT | 2019–03–26 | HZ | RA | – | – |
| 2 | FOR FABRICATION | 2019–03–15 | MR | RA | – | – |
| 1 | FOR APPROVAL | 2019–01–09 | HZ | RA | – | – |

**CONFIDENTIALITY AND INTELLECTUAL PROPERTY NOTICE**
ALL INFORMATION CONTAINED IN THIS DOCUMENT IS THE SOLE PROPERTY OF VEOLIA WATER TECHNOLOGIES CANADA INC. AND IS PROTECTED BY ALL APPLICABLE LAWS, INCLUDING BUT NOT LIMITED TO COPYRIGHT AND OTHER INTELLECTUAL PROPERTY LAWS. THE DESIGN CONCEPTS AND INFORMATION CONTAINED HEREIN ARE PROPRIETARY TO V.W.T AND ARE SUBMITTED IN CONFIDENCE. THEY ARE NOT TRANSFERABLE. THEY MUST BE USED ONLY FOR THE PURPOSE FOR WHICH THE DOCUMENT IS EXPRESSLY SUBMITTED AND NO IMPLICIT LICENCE IS GRANTED OTHERWISE BY THE SUBMISSION OF THIS DOCUMENT. THEY ARE CONFIDENTIAL AND PRIVILEGED INFORMATION OF V.W.T. AND THEY MUST NOT BE DISCLOSED, REPRODUCED, LOANED, REMITTED OR USED IN ANY OTHER MANNER WITHOUT THE EXPRESS WRITTEN CONSENT OF V.W.T. V.W.T. ASSUMES NO RESPONSIBILITY OR LIABILITY FOR THE USE OF THIS DOCUMENT OR THE DESIGN CONCEPTS AND INFORMATION CONTAINED HEREIN FOR ANOTHER PROJECT, OR IN A MANNER THAT DOES NOT RELATE TO THE FITNESS OR PURPOSE OF THIS DOCUMENT. IN NO EVENT SHALL THIS DOCUMENT OR THE DESIGN CONCEPTS AND INFORMATION CONTAINED HEREIN BE USED IN A MANNER DETRIMENTAL TO THE INTEREST OF V.W.T. ALL COPYRIGHT, PATENT AND OTHER INTELLECTUAL PROPERTY RIGHTS ARE RESERVED. ACCEPTANCE OF THE DELIVERY OF THIS DOCUMENT CONSTITUTES AGREEMENT TO THESE TERMS AND CONDITIONS.

| | |
|---|---|
| DESIGNER | DATE |
| – | – |
| CHECKER | DATE |
| – | – |
| ENGINEER | DATE |
| – | – |
| SCALE: | N/A |

TITLE: JB–001 SPIDFLOW T–02 310
CONTROL JUNCTION BOX
EXTERNAL & INTERNAL LAYOUT

CLIENT: WWTP UPGRADE
CITY OF IQALUIT

VEOLIA
VEOLIA WATER TECHNOLOGIES CANADA INC. 4105 Sartelon, Saint-Laurent, Qc, Canada. Tel: (514) 334-7230

| PROJECT | DRAWING | INTERNAL | SHEET | REV |
|---|---|---|---|---|
| 5000218036–EPL | – 0002–AU–VWT | – | 03 OF 05 | 5 |

BAR = 1" AT PLOT SCALE
REF: A6798A
STD: "B" 11x17
Mar 09, 2020 16:09:22 – G:\Projets A67XX\A6798A @ A6798D – VEOLIA – Upgrade\DOC\DESSIN\000–DRAWINGS\JB–001\REV5\5000218036–EPL–0002–AU–VWT–003.dwg – sbouya
5000218036 Iqaluit WWTP

BAR = 1" AT PLOT SCALE
REF: A6798A
STD: "B" 11x17

Mar 09, 2020 16:09:24 - G:\Projets A67XX\A6798A @ A6798D - VEOLIA - 5000218036 Iqaluit WWTP Upgrade\DOC\DESSIN\000-DRAWINGS\JB-001\REV5\5000218036-EPL-0002-AU-VWT-004.dwg - sbouya

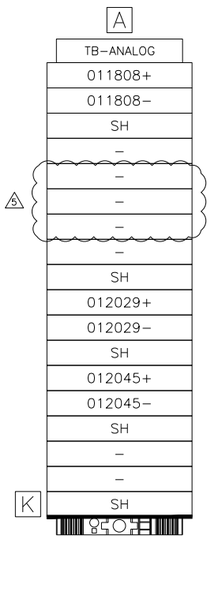


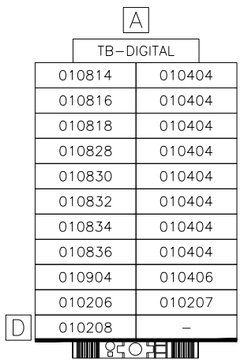


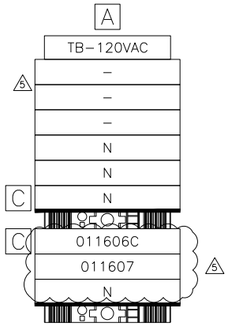


TERMINAL DESCRIPTION
A) ID(WAD8)
B) WDU6
C) WDU4
D) WDK2.5
E) DLD2.5
F) FUSE WSI 4/2
G) FUSE WSI 4
H) FUSE KDKS 1/EN4
J) WTR 2.5
K) WDU 2.5

| REV | DESCRIPTION | DATE | REVD | CHKD | APVD | ECN |
|---|---|---|---|---|---|---|
| 5 | AS BUIILT \|\| FIELD MODIFICATION | 2020-03-05 | SB | RA | - | - |
| 4 | AS BUIILT \|\| FIELD MODIFICATION | 2019-07-29 | JC | RA | - | - |
| 3 | AS BUILT | 2019-03-26 | HZ | RA | - | - |
| 2 | FOR FABRICATION | 2019-03-15 | MR | RA | - | - |
| 1 | FOR APPROVAL | 2019-01-09 | HZ | RA | - | - |

**CONFIDENTIALITY AND INTELLECTUAL PROPERTY NOTICE**
ALL INFORMATION CONTAINED IN THIS DOCUMENT IS THE SOLE PROPERTY OF VEOLIA WATER TECHNOLOGIES CANADA INC. AND IS PROTECTED BY ALL APPLICABLE LAWS, INCLUDING BUT NOT LIMITED TO COPYRIGHT AND OTHER INTELLECTUAL PROPERTY LAWS. THE DESIGN CONCEPTS AND INFORMATION CONTAINED HEREIN ARE PROPRIETARY TO V.W.T AND ARE SUBMITTED IN CONFIDENCE. THEY ARE NOT TRANSFERABLE. THEY MUST BE USED ONLY FOR THE PURPOSE FOR WHICH THE DOCUMENT IS EXPRESSLY SUBMITTED AND NO IMPLICIT LICENCE IS GRANTED OTHERWISE BY THE SUBMISSION OF THIS DOCUMENT. THEY ARE CONFIDENTIAL AND PRIVILEGED INFORMATION OF V.W.T. AND THEY MUST NOT BE DISCLOSED, REPRODUCED, LOANED, REMITTED OR USED IN ANY OTHER MANNER WITHOUT THE EXPRESS WRITTEN CONSENT OF V.W.T. V.W.T. ASSUMES NO RESPONSIBILITY OR LIABILITY FOR THE USE OF THIS DOCUMENT OR THE DESIGN CONCEPTS AND INFORMATION CONTAINED HEREIN FOR ANOTHER PROJECT, OR IN A MANNER THAT DOES NOT RELATE TO THE FITNESS OR PURPOSE OF THIS DOCUMENT. IN NO EVENT SHALL THIS DOCUMENT OR THE DESIGN CONCEPTS AND INFORMATION CONTAINED HEREIN BE USED IN A MANNER DETRIMENTAL TO THE INTEREST OF V.W.T. ALL COPYRIGHT, PATENT AND OTHER INTELLECTUAL PROPERTY RIGHTS ARE RESERVED. ACCEPTANCE OF THE DELIVERY OF THIS DOCUMENT CONSTITUTES AGREEMENT TO THESE TERMS AND CONDITIONS.

| | | DATE |
|---|---|---|
| DESIGNER | - | - |
| CHECKER | - | - |
| ENGINEER | - | - |
| SCALE: | N/A | |

TITLE: JB-001 SPIDFLOW T-02 310 CONTROL JUNCTION BOX TERMINAL LAYOUT

CLIENT: WWTP UPGRADE CITY OF IQALUIT

VEOLIA
VEOLIA WATER TECHNOLOGIES CANADA INC. 4105 Sartelon, Saint-Laurent, Qc, Canada. Tel: (514) 334-7230

| PROJECT | DRAWING | INTERNAL | SHEET | REV |
|---|---|---|---|---|
| 5000218036-EPL | 0002-AU-VWT | - | 04 OF 05 | 5 |

| ITEM | DESCRIPTION | PART NUMBER | MANUF. | QTY | BY |
|---|---|---|---|---|---|
| 1 | NEMA 4X ENCLOSURE, C/W PAN 14R1311<br>DIM 14"H x 12"W x 6"D, FIBERGLASS REINFORCED POLYESTER | PJ14126RL | HAMMOND | 1 | ENV |
| 2 | TERMINAL 600VAC/DC, 20A WDU 2.5<br>C/W END PLATE 1050000000 | 1020000000 | WEIDMULLER | A/R | ENV |
| 3 | TERMINAL 600VAC/DC, 30A WDU 4<br>C/W END PLATE 1050000000 | 1020100000 | WEIDMULLER | A/R | ENV |
| 4 | TERMINAL 600VAC/DC, 50A WDU 6<br>C/W END PLATE 1050000000 OR SEPERATOR 1050100000 | 1020200000 | WEIDMULLER | A/R | ENV |
| 5 | KNIFE TERMINAL 300VAC/DC, 10A, WTR 2.5<br>C/W END PLATE 1050000000 | 1855610000 | WEIDMULLER | A/R | ENV |
| 6 | TERMINAL 2 LEVEL 300VAC/DC, 10A, WDK 2.5<br>C/W END PLATE 1059100000 | 1021500000 | WEIDMULLER | A/R | ENV |
| 7 | TERMINAL 3 LEVEL 300VAC/DC, 10A, DLD 2.5<br>C/W END PLATE 1784210000 | 1784180000 | WEIDMULLER | A/R | ENV |
| 8 | FUSE TERMINAL ¼ X 1¼, 300VAC/DC, 15A, WSI 4/2<br>C/W END PLATE 1880450000 | 1880430000 | WEIDMULLER | A/R | ENV |
| 9 | FUSE TERMINAL 5 X 20mm, 300VAC/DC, 15A, WSI 4 | 1886580000 | WEIDMULLER | A/R | ENV |
| 10 | FUSE TERMINAL 2 LEVEL 5 X 20mm, 300VAC/DC, 10A, KDKS 1/EN4<br>C/W END PLATE 9503330000 | 9503350000 | WEIDMULLER | A/R | ENV |
| 11 | FUSE TERMINAL 2 LEVEL ¼ X 1¼, 300VAC/DC, 10A, KDKS 1/35DB<br>C/W END PLATE 9532470000 | 9532440000 | WEIDMULLER | A/R | ENV |
| 12 | END STOPPER WEW 35/2 | 1061200000 | WEIDMULLER | A/R | ENV |
| 13 | COPPER GROUND BAR, #4-14 | 4C-190 | NSI-INDUSTRIES | A/R | ENV |
| 14 | COPPER GROUND LUG, 600VAC, #6-14, STR | CB35-36-LY | PANDUIT | A/R | ENV |

| REV | DESCRIPTION | DATE | REVD | CHKD | APVD | ECN |
|---|---|---|---|---|---|---|
| 5 | AS BUIILT \|\| FIELD MODIFICATION | 2020-03-05 | SB | RA | – | – |
| 4 | AS BUIILT \|\| FIELD MODIFICATION | 2019-07-29 | JC | RA | – | – |
| 3 | AS BUILT | 2019-03-26 | HZ | RA | – | – |
| 2 | FOR FABRICATION | 2019-03-15 | MR | RA | – | – |
| 1 | FOR APPROVAL | 2019-01-09 | HZ | RA | – | – |

**CONFIDENTIALITY AND INTELLECTUAL PROPERTY NOTICE**
ALL INFORMATION CONTAINED IN THIS DOCUMENT IS THE SOLE PROPERTY OF VEOLIA WATER TECHNOLOGIES CANADA INC. AND IS PROTECTED BY ALL APPLICABLE LAWS, INCLUDING BUT NOT LIMITED TO COPYRIGHT AND OTHER INTELLECTUAL PROPERTY LAWS. THE DESIGN CONCEPTS AND INFORMATION CONTAINED HEREIN ARE PROPRIETARY TO V.W.T AND ARE SUBMITTED IN CONFIDENCE. THEY ARE NOT TRANSFERABLE. THEY MUST BE USED ONLY FOR THE PURPOSE FOR WHICH THE DOCUMENT IS EXPRESSLY SUBMITTED AND NO IMPLICIT LICENCE IS GRANTED OTHERWISE BY THE SUBMISSION OF THIS DOCUMENT. THEY ARE CONFIDENTIAL AND PRIVILEGED INFORMATION OF V.W.T. AND THEY MUST NOT BE DISCLOSED, REPRODUCED, LOANED, REMITTED OR USED IN ANY OTHER MANNER WITHOUT THE EXPRESS WRITTEN CONSENT OF V.W.T. V.W.T. ASSUMES NO RESPONSIBILITY OR LIABILITY FOR THE USE OF THIS DOCUMENT OR THE DESIGN CONCEPTS AND INFORMATION CONTAINED HEREIN FOR ANOTHER PROJECT, OR IN A MANNER THAT DOES NOT RELATE TO THE FITNESS OR PURPOSE OF THIS DOCUMENT. IN NO EVENT SHALL THIS DOCUMENT OR THE DESIGN CONCEPTS AND INFORMATION CONTAINED HEREIN BE USED IN A MANNER DETRIMENTAL TO THE INTEREST OF V.W.T. ALL COPYRIGHT, PATENT AND OTHER INTELLECTUAL PROPERTY RIGHTS ARE RESERVED. ACCEPTANCE OF THE DELIVERY OF THIS DOCUMENT CONSTITUTES AGREEMENT TO THESE TERMS AND CONDITIONS.

| | |
|---|---|
| DESIGNER | DATE |
| – | – |
| CHECKER | DATE |
| – | – |
| ENGINEER | DATE |
| – | – |
| SCALE: | N/A |

TITLE: JB-001 SPIDFLOW T-02 310
CONTROL JUNCTION BOX
BILL OF MATERIAL

CLIENT: WWTP UPGRADE
CITY OF IQALUIT

VEOLIA

VEOLIA WATER TECHNOLOGIES CANADA INC. 4105 Sartelon, Saint-Laurent, Qc, Canada. Tel: (514) 334-7230

| PROJECT / DRAWING | INTERNAL | SHEET | REV |
|---|---|---|---|
| 5000218036-EPL – 0002-AU-VWT | – | 05 OF 05 | 5 |

BAR = 1" AT PLOT SCALE
REF: A6798A
STD: "B" 11x17
Mar 09, 2020 16:09:25 – G:\Projets A67XX\A6798A @ A6798D – VEOLIA – 5000218036 Iqaluit WWTP Upgrade\DOC\DESSIN\000-DRAWINGS\JB-001\REV5\5000218036-EPL-0002-AU-VWT-005.dwg – sbouya

BAR = 1" AT PLOT SCALE
REF: A6798A
STD: "B" 11x17

Mar 09, 2020 16:09:27 - G:\Projets A67XX\A6798A @ A6798D - VEOLIA - Upgrade\DOC\DESSIN\000-DRAWINGS\JB-001\REV5\5000218036-EID-0002-AU-VWT-001.dwg - sbouya

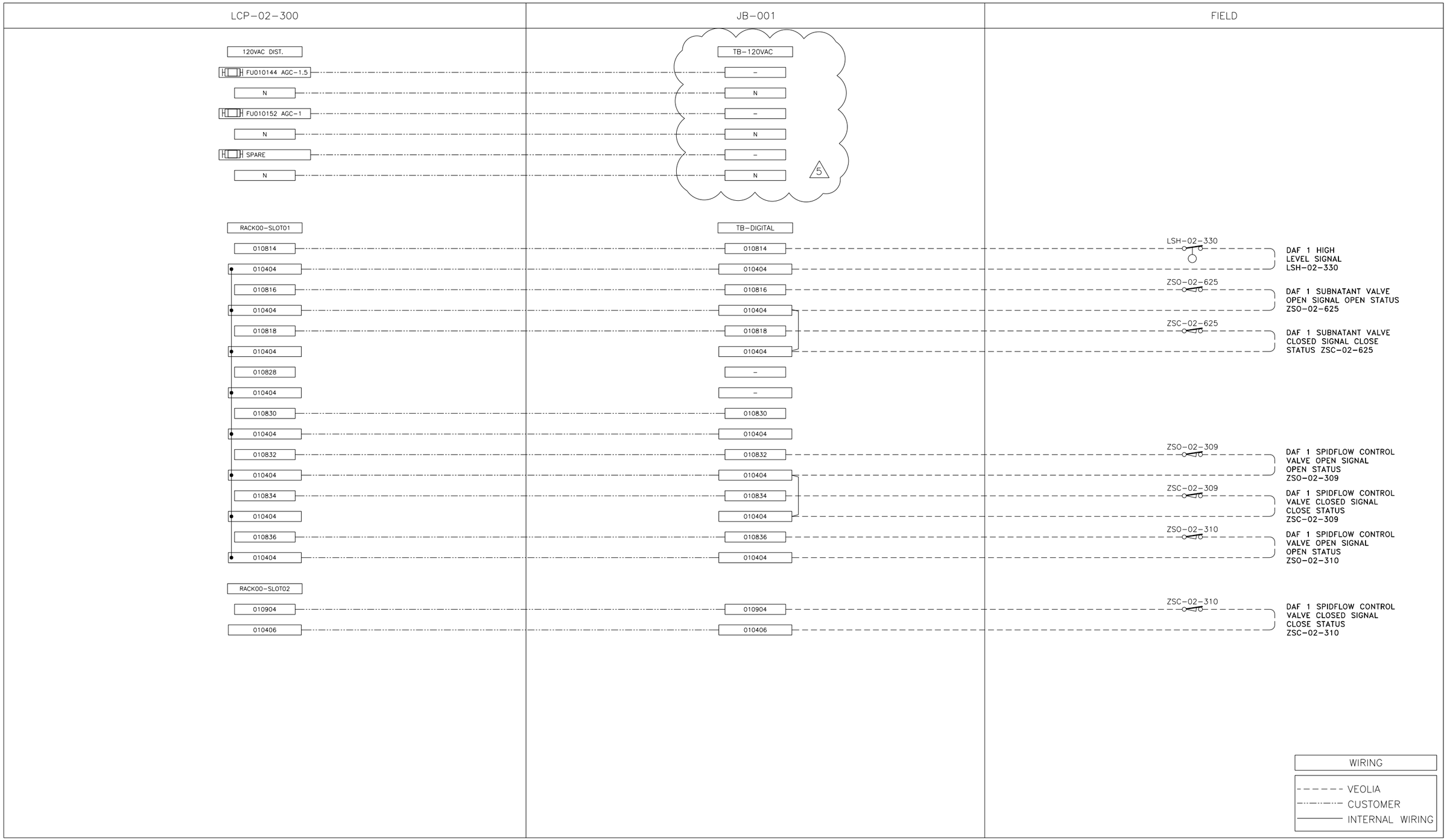


| REV | DESCRIPTION | DATE | REVD | CHKD | APVD | ECN |
|---|---|---|---|---|---|---|
| 5 | AS BUIILT \|\| FIELD MODIFICATION | 2020-03-05 | SB | RA | – | – |
| 4 | AS BUIILT \|\| FIELD MODIFICATION | 2019-07-29 | JC | RA | – | – |
| 3 | AS BUILT | 2019-03-26 | HZ | RA | – | – |
| 2 | FOR FABRICATION | 2019-03-15 | MR | RA | – | – |
| 1 | FOR APPROVAL | 2019-01-09 | HZ | RA | – | – |

**CONFIDENTIALITY AND INTELLECTUAL PROPERTY NOTICE**
ALL INFORMATION CONTAINED IN THIS DOCUMENT IS THE SOLE PROPERTY OF VEOLIA WATER TECHNOLOGIES CANADA INC. AND IS PROTECTED BY ALL APPLICABLE LAWS, INCLUDING BUT NOT LIMITED TO COPYRIGHT AND OTHER INTELLECTUAL PROPERTY LAWS. THE DESIGN CONCEPTS AND INFORMATION CONTAINED HEREIN ARE PROPRIETARY TO V.W.T AND ARE SUBMITTED IN CONFIDENCE. THEY ARE NOT TRANSFERABLE. THEY MUST BE USED ONLY FOR THE PURPOSE FOR WHICH THE DOCUMENT IS EXPRESSLY SUBMITTED AND NO IMPLICIT LICENCE IS GRANTED OTHERWISE BY THE SUBMISSION OF THIS DOCUMENT. THEY ARE CONFIDENTIAL AND PRIVILEGED INFORMATION OF V.W.T. AND THEY MUST NOT BE DISCLOSED, REPRODUCED, LOANED, REMITTED OR USED IN ANY OTHER MANNER WITHOUT THE EXPRESS WRITTEN CONSENT OF V.W.T. V.W.T. ASSUMES NO RESPONSIBILITY OR LIABILITY FOR THE USE OF THIS DOCUMENT OR THE DESIGN CONCEPTS AND INFORMATION CONTAINED HEREIN FOR ANOTHER PROJECT, OR IN A MANNER THAT DOES NOT RELATE TO THE FITNESS OR PURPOSE OF THIS DOCUMENT. IN NO EVENT SHALL THIS DOCUMENT OR THE DESIGN CONCEPTS AND INFORMATION CONTAINED HEREIN BE USED IN A MANNER DETRIMENTAL TO THE INTEREST OF V.W.T. ALL COPYRIGHT, PATENT AND OTHER INTELLECTUAL PROPERTY RIGHTS ARE RESERVED. ACCEPTANCE OF THE DELIVERY OF THIS DOCUMENT CONSTITUTES AGREEMENT TO THESE TERMS AND CONDITIONS.

| | | |
|---|---|---|
| DESIGNER | – | DATE – |
| CHECKER | – | DATE – |
| ENGINEER | – | DATE – |
| SCALE: | N/A | |

TITLE: JB-001 SPIDFLOW T-02 310 CONTROL JUNCTION BOX FIELD WIRING

CLIENT: WWTP UPGRADE CITY OF IQALUIT

VEOLIA

VEOLIA WATER TECHNOLOGIES CANADA INC. 4105 Sartelon, Saint-Laurent, Qc, Canada. Tel: (514) 334-7230

| PROJECT DRAWING | INTERNAL | SHEET | REV |
|---|---|---|---|
| 5000218036-EID – 0002-AU-VWT | - | 01 OF 02 | 5 |

BAR = 1" AT PLOT SCALE
REF: A6798A
STD: "B" 11x17

Mar 09, 2020 16:09:29 - G:\Projets A67XX\A6798A @ A6798D - VEOLIA - Upgrade\DOC\DESSIN\000-DRAWINGS\JB-001\REV5\5000218036-EID-0002-AU-VWT-002.dwg - sbouyo
5000218036 Iqaluit WWTP

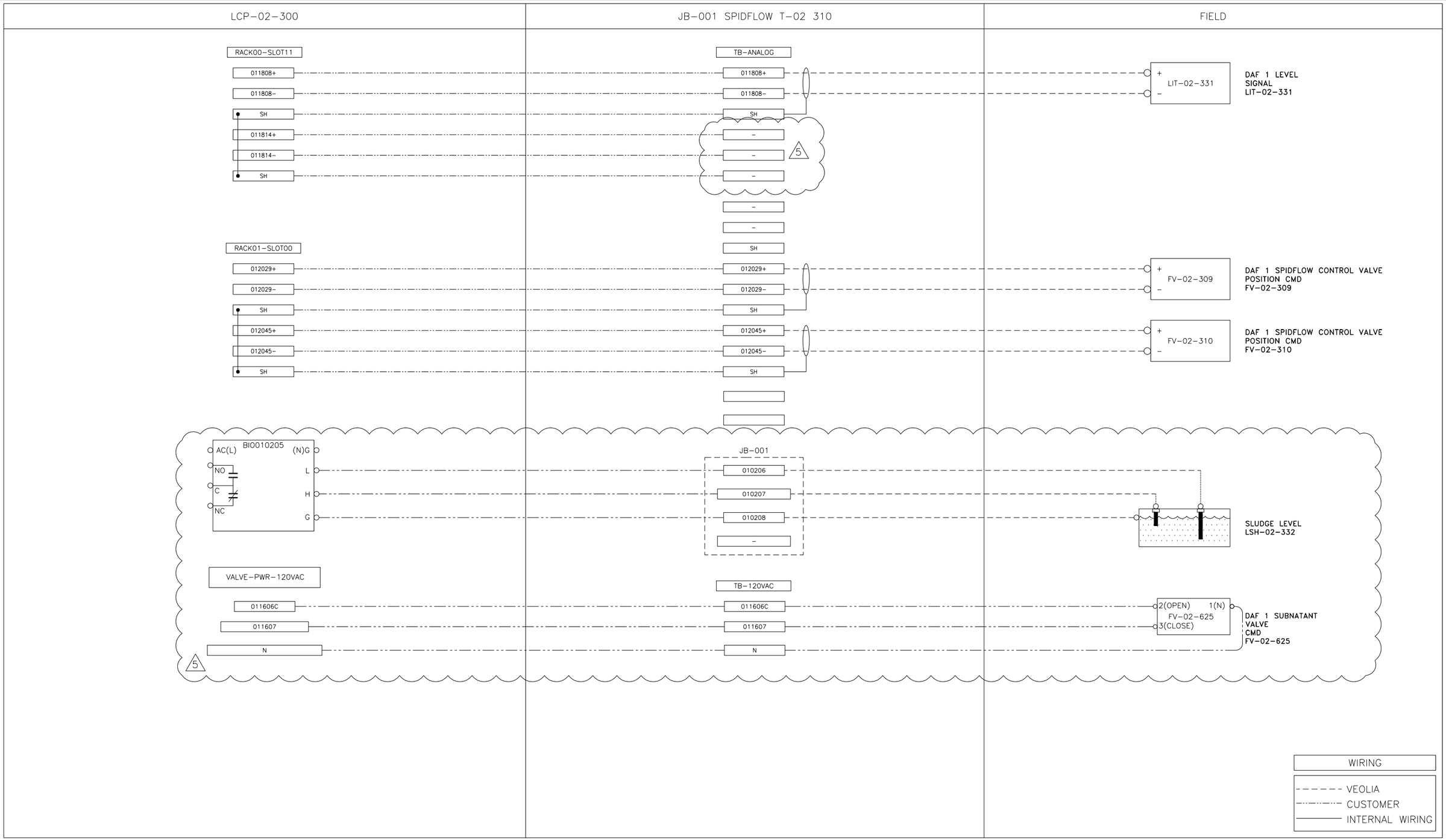


| REV | DESCRIPTION | DATE | REVD | CHKD | APVD | ECN |
|---|---|---|---|---|---|---|
| 5 | AS BUIILT || FIELD MODIFICATION | 2020-03-05 | SB | RA | – | – |
| 4 | AS BUIILT || FIELD MODIFICATION | 2019-07-29 | JC | RA | – | – |
| 3 | AS BUILT | 2019-03-26 | HZ | RA | – | – |
| 2 | FOR FABRICATION | 2019-03-15 | MR | RA | – | – |
| 1 | FOR APPROVAL | 2019-01-09 | HZ | RA | – | – |

**CONFIDENTIALITY AND INTELLECTUAL PROPERTY NOTICE**
ALL INFORMATION CONTAINED IN THIS DOCUMENT IS THE SOLE PROPERTY OF VEOLIA WATER TECHNOLOGIES CANADA INC. AND IS PROTECTED BY ALL APPLICABLE LAWS, INCLUDING BUT NOT LIMITED TO COPYRIGHT AND OTHER INTELLECTUAL PROPERTY LAWS. THE DESIGN CONCEPTS AND INFORMATION CONTAINED HEREIN ARE PROPRIETARY TO V.W.T AND ARE SUBMITTED IN CONFIDENCE. THEY ARE NOT TRANSFERABLE. THEY MUST BE USED ONLY FOR THE PURPOSE FOR WHICH THE DOCUMENT IS EXPRESSLY SUBMITTED AND NO IMPLICIT LICENCE IS GRANTED OTHERWISE BY THE SUBMISSION OF THIS DOCUMENT. THEY ARE CONFIDENTIAL AND PRIVILEGED INFORMATION OF V.W.T. AND THEY MUST NOT BE DISCLOSED, REPRODUCED, LOANED, REMITTED OR USED IN ANY OTHER MANNER WITHOUT THE EXPRESS WRITTEN CONSENT OF V.W.T. V.W.T. ASSUMES NO RESPONSIBILITY OR LIABILITY FOR THE USE OF THIS DOCUMENT OR THE DESIGN CONCEPTS AND INFORMATION CONTAINED HEREIN FOR ANOTHER PROJECT, OR IN A MANNER THAT DOES NOT RELATE TO THE FITNESS OR PURPOSE OF THIS DOCUMENT. IN NO EVENT SHALL THIS DOCUMENT OR THE DESIGN CONCEPTS AND INFORMATION CONTAINED HEREIN BE USED IN A MANNER DETRIMENTAL TO THE INTEREST OF V.W.T. ALL COPYRIGHT, PATENT AND OTHER INTELLECTUAL PROPERTY RIGHTS ARE RESERVED. ACCEPTANCE OF THE DELIVERY OF THIS DOCUMENT CONSTITUTES AGREEMENT TO THESE TERMS AND CONDITIONS.

| | | DATE |
|---|---|---|
| DESIGNER | – | – |
| CHECKER | – | – |
| ENGINEER | – | – |
| SCALE: | N/A | |

TITLE: JB-001 SPIDFLOW T-02 310
CONTROL JUNCTION BOX
FIELD WIRING

CLIENT: WWTP UPGRADE
CITY OF IQALUIT

VEOLIA WATER TECHNOLOGIES CANADA INC. 4105 Sartelon, Saint-Laurent, Qc, Canada. Tel: (514) 334-7230

| PROJECT | DRAWING | INTERNAL | SHEET | REV |
|---|---|---|---|---|
| 5000218036-EID | 0002-AU-VWT | – | 02 OF 02 | 5 |

BAR = 1" AT PLOT SCALE
REF: A6798A
STD: "B" 11x17

# WWTP UPGRADE
# CITY OF IQALUIT
# CONTROL JUNCTION BOX
# JB-001 SPIDFLOW T-02 310
# PROJECT: 5000218036

Mar 09, 2020 16:06:57 - G:\Projets A67XX\A6798A @ A6798D - VEOLIA - 5000218036 Iqaluit WWTP Upgrade\DOC\DESSIN\000-DRAWINGS\JB-001\REV5\5000218036-EPL-0002-AU-VWT-001.dwg - sbouya

| REV | DESCRIPTION | DATE | REVD | CHKD | APVD | ECN |
|---|---|---|---|---|---|---|
| 5 | AS BUIILT || FIELD MODIFICATION | 2020-03-05 | SB | RA | – | – |
| 4 | AS BUIILT || FIELD MODIFICATION | 2019-07-29 | JC | RA | – | – |
| 3 | AS BUILT | 2019-03-26 | HZ | RA | – | – |
| 2 | FOR FABRICATION | 2019-03-15 | MR | RA | – | – |
| 1 | FOR APPROVAL | 2019-01-09 | HZ | RA | – | – |

**CONFIDENTIALITY AND INTELLECTUAL PROPERTY NOTICE**
ALL INFORMATION CONTAINED IN THIS DOCUMENT IS THE SOLE PROPERTY OF VEOLIA WATER TECHNOLOGIES CANADA INC. AND IS PROTCEID BY ALL APPLICABLE LWS, INCLUDING BUT NOT LMIED TO COPRIGHT AND OTHER INTELLECTUAL PROPERTY LAWS. THE DESIGN CONCEPTS AND INFORMATION CONTAINED HEREIN ARE PROPRIETARY TO V.W.T AND ARE SUBMITTED IN CONFIDENCE. THEY ARE NOT TRANSFERABLE. THEY MUST BE USED ONLY FOR THE PURPOSE FOR WHICH THE DOCUMENT IS EXPRESSLY SUBMITTED AND NO IMPLICIT LICENCE IS GRANTED OTHERWISE BY THE SUBMISSION OF THIS DOCUMENT. THEY ARE CONFIDENTIAL AND PRIVILEGED INFORMATION OF V.W.T. AND THEY MUST NOT BE DISCLOSED, REPRODUCED, LOANED, REMITTED OR USED IN ANY OTHER MANNER WITHOUT THE EXPRESS WRITTEN CONSENT OF V.W.T. V.W.T. ASSUMES NO RESPONSIBILITY OR LIABILITY FOR THE USE OF THIS DOCUMENT OR THE DESIGN CONCEPTS AND INFORMATION CONTAINED HEREIN FOR ANOTHER PROJECT, OR IN A MANNER THAT DOES NOT RELATE TO THE FITNESS OR PURPOSE OF THIS DOCUMENT. IN NO EVENT SHALL THIS DOCUMENT OR THE DESIGN CONCEPTS AND INFORMATION CONTAINED HEREIN BE USED IN A MANNER DETRIMENTAL TO THE INTEREST OF V.W.T. ALL COPYRIGHT, PATENT AND OTHER INTELLECTUAL PROPERTY RIGHTS ARE RESERVED. ACCEPTANCE OF THE DELIVERY OF THIS DOCUMENT CONSTITUTES AGREEMENT TO THESE TERMS AND CONDITIONS.

| | |
|---|---|
| DESIGNER | DATE |
| – | – |
| CHECKER | DATE |
| – | – |
| ENGINEER | DATE |
| – | – |
| SCALE: | N/A |

TITLE: JB-001 SPIDFLOW T-02 310
CONTROL JUNCTION BOX
TITLE PAGE

CLIENT: WWTP UPGRADE
CITY OF IQALUIT

VEOLIA
VEOLIA WATER TECHNOLOGIES CANADA INC. 4105 Sartelon, Saint-Laurent, Qc, Canada. Tel: (514) 334-7230

| PROJECT | DRAWING | INTERNAL | SHEET | REV |
|---|---|---|---|---|
| 5000218036 | EPL – 0002-AU-VWT | – | 01 OF 05 | 5 |

DRAWING LIST

| DESCRIPTION | DRAWING NUMBER |
|---|---|
| CONTROL JUNCTION BOX JB-002 SPIDFLOW T-02-320 | |
| TITLE PAGE | 5000218036-EPL-0003-AU-VWT-001 |
| LEGEND & DRAWING LIST | 5000218036-EPL-0003-AU-VWT-002 |
| EXTERNAL & INTERNAL LAYOUT | 5000218036-EPL-0003-AU-VWT-003 |
| BILL OF MATERIAL | 5000218036-EPL-0003-AU-VWT-004 |
| TERMINAL LAYOUT | 5000218036-EPL-0003-AU-VWT-005 |
| FIELD WIRING | 5000218036-EID-0003-AU-VWT-001 |
| FIELD WIRING | 5000218036-EID-0003-AU-VWT-002 |

LEGEND

LOW PRESSURE
HIGH PRESSURE
LOW LEVEL
HIGH LEVEL
LIMIT SWITCH
LIMIT SWITCH
LOW FLOW
HIGH FLOW
RELAY CONTACT
RELAY CONTACT
RELAY CONTACT
ON DELAY TIMER
OFF DELAY TIMER
GROUND
ISOLATED GROUND
FUSE (POWER)
FUSE (CONTROL)
DISTRIBUTION BLOCK

MAINTAINED TWO SELECTOR SWITCH
MAINTAINED 3 POSITIONS SELECTOR SWITCH
SPRING RETURN FROM LEFT 3 POSITIONS SELECTOR SWITCH
SPRING RETURN FROM RIGHT 3 POSITIONS SELECTOR SWITCH
SPRING RETURN FROM BOTH 3 POSITIONS SELECTOR SWITCH
PUSH BUTTON
PUSH BUTTON
PULL BUTTON
PULL BUTTON
EMERGENCY STOP BUTTON
POTENTIOMETER
CURRENT TRANSFORMER
THERMOSTAT
THERMOSTAT
1 POLE CIRCUIT BREAKER

COOLING FAN
RECEPTACLE 120VAC WITH RJ45
RECEPTACLE 120VAC DUPLEX
PILOT LIGHT
PUSH TO TEST PILOT LIGHT
RELAY COIL
RELAY COIL WITH SURGE SUPPRESSOR
CONTACTOR COIL
CONTACTOR COIL WITH SURGE SUPPRESSOR
ALARM
RESISTOR
SOLENOID
PULL CORD
ZERO SPEED DETECTOR

POWER BLOCK FOR FIELD WIRING
TERMINAL
WIRING JUNCTION
KNIFE TERMINAL

3 POLES THERMAL MAGNETIC CIRCUIT BREAKER
3 POLES MAGNETIC CIRCUIT BREAKER
3 POLES FUSIBLE DISCONNECT SWITCH
3 POLES DISCONNECT SWITCH
3 POLES CONTACTOR
3 POLES OVERLOAD RELAY

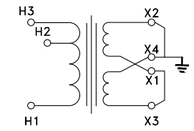

1 POLE TRANSFORMER

WIRE COLOR CODE

| MINIMAL 18AWG GAUGE | |
|---|---|
| | |
| POWER 120VAC | BLACK |
| CONTROL 120VAC | RED |
| NEUTRAL | WHITE |
| 24VDC | BLUE |
| 0VDC | BLUE/WHITE |
| DRY CONTRACT | YELLOW, 14AWG |
| NON-ISOLATED GROUND | GREEN |
| ISOLATED GROUND | GREEN/YELLOW |
| TWISTED PAIR | (+) BLACK & (-) WHITE |

| REV | DESCRIPTION | DATE | REVD | CHKD | APVD | ECN |
|---|---|---|---|---|---|---|
| 5 | AS BUILT \|\| FIELD MODIFICATION | 2020-03-05 | SB | RA | – | – |
| 4 | AS BUILT \|\| FIELD MODIFICATION | 2019-07-30 | JC | RA | – | – |
| 3 | AS BUILT | 2019-03-26 | HZ | RA | – | – |
| 2 | FOR FABRICATION | 2019-03-19 | HZ | RA | – | – |
| 1 | FOR APPROVAL | 2019-01-09 | HZ | RA | – | – |


CONFIDENTIALITY AND INTELLECTUAL PROPERTY NOTICE
ALL INFORMATION CONTAINED IN THIS DOCUMENT IS THE SOLE PROPERTY OF VEOLIA WATER TECHNOLOGIES CANADA INC. AND IS PROTECTED BY ALL APPLICABLE LAWS, INCLUDING BUT NOT LIMITED TO COPYRIGHT AND OTHER INTELLECTUAL PROPERTY LAWS. THE DESIGN CONCEPTS AND INFORMATION CONTAINED HEREIN ARE PROPRIETARY TO V.W.T AND ARE SUBMITTED IN CONFIDENCE. THEY ARE NOT TRANSFERABLE. THEY MUST BE USED ONLY FOR THE PURPOSE FOR WHICH THE DOCUMENT IS EXPRESSLY SUBMITTED AND NO IMPLICIT LICENCE IS GRANTED OTHERWISE BY THE SUBMISSION OF THIS DOCUMENT. THEY ARE CONFIDENTIAL AND PRIVILEGED INFORMATION OF V.W.T. AND THEY MUST NOT BE DISCLOSED, REPRODUCED, LOANED, REMITTED OR USED IN ANY OTHER MANNER WITHOUT THE EXPRESS WRITTEN CONSENT OF V.W.T. V.W.T. ASSUMES NO RESPONSIBILITY OR LIABILITY FOR THE USE OF THIS DOCUMENT OR THE DESIGN CONCEPTS AND INFORMATION CONTAINED HEREIN FOR ANOTHER PROJECT, OR IN A MANNER THAT DOES NOT RELATE TO THE FITNESS OR PURPOSE OF THIS DOCUMENT. IN NO EVENT SHALL THIS DOCUMENT OR THE DESIGN CONCEPTS AND INFORMATION CONTAINED HEREIN BE USED IN A MANNER DETRIMENTAL TO THE INTEREST OF V.W.T. ALL COPYRIGHT, PATENT AND OTHER INTELLECTUAL PROPERTY RIGHTS ARE RESERVED. ACCEPTANCE OF THE DELIVERY OF THIS DOCUMENT CONSTITUTES AGREEMENT TO THESE TERMS AND CONDITIONS.


| | | DATE |
|---|---|---|
| DESIGNER | – | – |
| CHECKER | – | – |
| ENGINEER | – | – |
| SCALE: | N/A | |

TITLE: JB-002 SPIDFLOW T-02-320
CONTROL JUNCTION BOX
LEGEND & DRAWING LIST

CLIENT: WWTP UPGRADE
CITY OF IQALUIT


VEOLIA
VEOLIA WATER TECHNOLOGIES CANADA INC. 4105 Sartelon, Saint-Laurent, Qc, Canada. Tel: (514) 334-7230


| PROJECT DRAWING | INTERNAL | SHEET | REV |
|---|---|---|---|
| 5000218036-EPL – 0003-AU-VWT | – | 02 OF 05 | 5 |


BAR = 1" AT PLOT SCALE
REF: A6798A
STD: "B" 11x17
Mar 09, 2020 16:06:58 – G:\Projets A67XX\A6798A @ A6798D – VEOLIA – 5000218036 Iqaluit WWTP Upgrade\DOC\DESSIN\000-DRAWINGS\JB-002\REV 5\5000218036-EPL-0003-AU-VWT-002.dwg – sbouya

ENCLOSURE NEMA 4X–FIERGLASS / 14H'' X 12W'' X 6D'' (PJ14126RL)
cUL APPROVAL

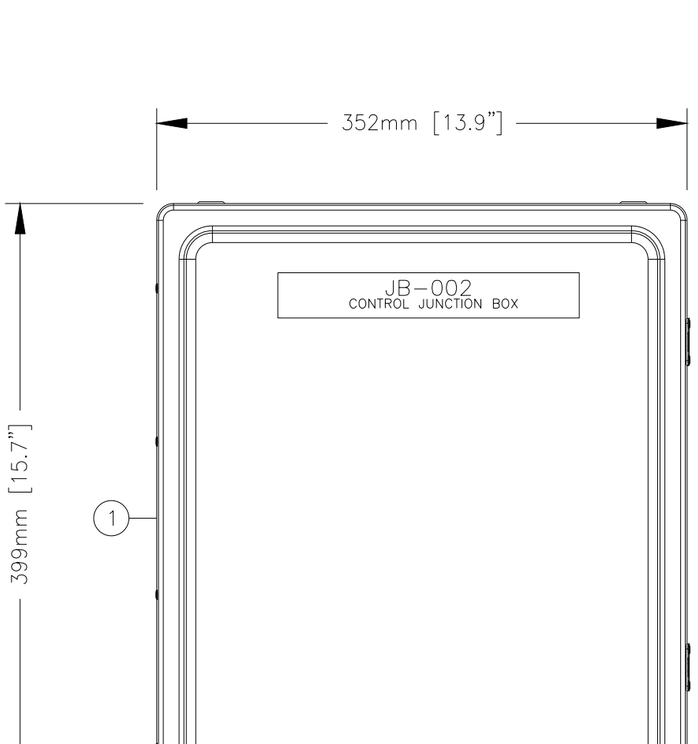


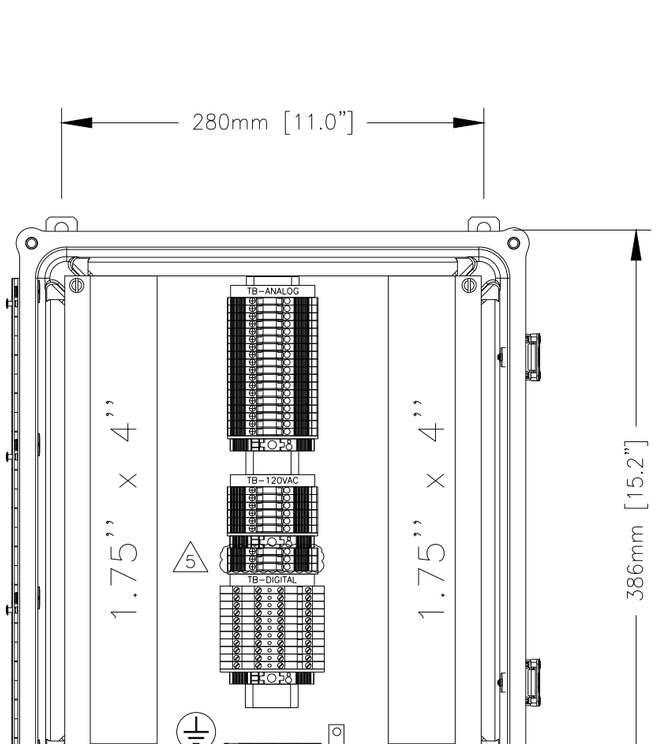


| REV | DESCRIPTION | DATE | REVD | CHKD | APVD | ECN |
|---|---|---|---|---|---|---|
| 5 | AS BUILT \|\| FIELD MODIFICATION | 2020–03–05 | SB | RA | – | – |
| 4 | AS BUILT \|\| FIELD MODIFICATION | 2019–07–30 | JC | RA | – | – |
| 3 | AS BUILT | 2019–03–26 | HZ | RA | – | – |
| 2 | FOR FABRICATION | 2019–03–19 | HZ | RA | – | – |
| 1 | FOR APPROVAL | 2019–01–09 | HZ | RA | – | – |

**CONFIDENTIALITY AND INTELLECTUAL PROPERTY NOTICE**
ALL INFORMATION CONTAINED IN THIS DOCUMENT IS THE SOLE PROPERTY OF VEOLIA WATER TECHNOLOGIES CANADA INC. AND IS PROTECTED BY ALL APPLICABLE LAWS, INCLUDING BUT NOT LIMITED TO COPYRIGHT AND OTHER INTELLECTUAL PROPERTY LAWS. THE DESIGN CONCEPTS AND INFORMATION CONTAINED HEREIN ARE PROPRIETARY TO V.W.T AND ARE SUBMITTED IN CONFIDENCE. THEY ARE NOT TRANSFERABLE. THEY MUST BE USED ONLY FOR THE PURPOSE FOR WHICH THE DOCUMENT IS EXPRESSLY SUBMITTED AND NO IMPLICIT LICENCE IS GRANTED OTHERWISE BY THE SUBMISSION OF THIS DOCUMENT. THEY ARE CONFIDENTIAL AND PRIVILEGED INFORMATION OF V.W.T. AND THEY MUST NOT BE DISCLOSED, REPRODUCED, LOANED, REMITTED OR USED IN ANY OTHER MANNER WITHOUT THE EXPRESS WRITTEN CONSENT OF V.W.T. V.W.T. ASSUMES NO RESPONSIBILITY OR LIABILITY FOR THE USE OF THIS DOCUMENT OR THE DESIGN CONCEPTS AND INFORMATION CONTAINED HEREIN FOR ANOTHER PROJECT, OR IN A MANNER THAT DOES NOT RELATE TO THE FITNESS OR PURPOSE OF THIS DOCUMENT. IN NO EVENT SHALL THIS DOCUMENT OR THE DESIGN CONCEPTS AND INFORMATION CONTAINED HEREIN BE USED IN A MANNER DETRIMENTAL TO THE INTEREST OF V.W.T. ALL COPYRIGHT, PATENT AND OTHER INTELLECTUAL PROPERTY RIGHTS ARE RESERVED. ACCEPTANCE OF THE DELIVERY OF THIS DOCUMENT CONSTITUTES AGREEMENT TO THESE TERMS AND CONDITIONS.

| | | DATE |
|---|---|---|
| DESIGNER | – | – |
| CHECKER | – | – |
| ENGINEER | – | – |
| SCALE: | N/A | |

TITLE: JB–002 SPIDFLOW T–02–320
CONTROL JUNCTION BOX
EXTERNAL & INTERNAL LAYOUT

CLIENT: WWTP UPGRADE
CITY OF IQALUIT

VEOLIA
VEOLIA WATER TECHNOLOGIES CANADA INC. 4105 Sartelon, Saint-Laurent, Qc, Canada. Tel: (514) 334-7230

| PROJECT | DRAWING | INTERNAL | SHEET | REV |
|---|---|---|---|---|
| 5000218036–EPL | – 0003–AU–VWT | – | 03 OF 05 | 5 |

BAR = 1" AT PLOT SCALE
REF: 4
STD: "B" 11x17
Mar 09, 2020 16:07:00 – G:\Projets A67XX\A6798A @ A6798D – VEOLIA – 5000218036 Iqaluit WWTP Upgrade\DOC\DESSIN\000–DRAWINGS\JB–002\REV 5\5000218036–EPL–0003–AU–VWT–003.dwg – sbouya

BAR = 1" AT PLOT SCALE
REF: A6798A
STD: "B" 11x17

Mar 09, 2020 16:07:02 – G:\Projets A67XX\A6798A @ A6798D – VEOLIA – 5000218036 Iqaluit WWTP Upgrade\DOC\DESSIN\000-DRAWINGS\JB-002\REV 5\5000218036-EPL-0003-AU-VWT-004.dwg – sbouya

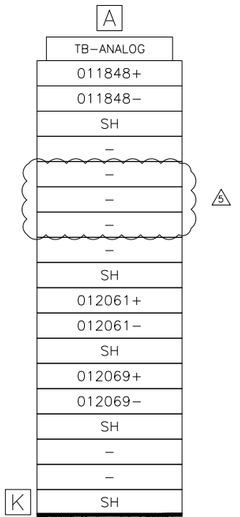


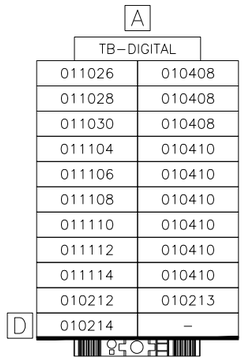


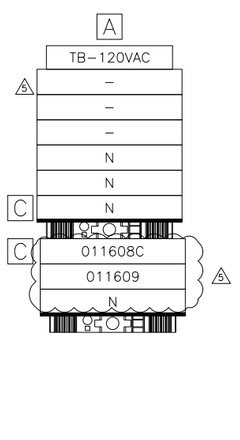


TERMINAL DESCRIPTION
A) ID(WAD8)
B) WDU6
C) WDU4
D) WDK2.5
E) DLD2.5
F) FUSE WSI 4/2
G) FUSE WSI 4
H) FUSE KDKS 1/EN4
J) WTR 2.5
K) WDU 2.5

| REV | DESCRIPTION | DATE | REVD | CHKD | APVD | ECN |
|---|---|---|---|---|---|---|
| 5 | AS BUILT \|\| FIELD MODIFICATION | 2020-03-05 | SB | RA | – | – |
| 4 | AS BUILT \|\| FIELD MODIFICATION | 2019-07-30 | JC | RA | – | – |
| 3 | AS BUILT | 2019-03-26 | HZ | RA | – | – |
| 2 | FOR FABRICATION | 2019-03-19 | HZ | RA | – | – |
| 1 | FOR APPROVAL | 2019-01-09 | HZ | RA | – | – |

**CONFIDENTIALITY AND INTELLECTUAL PROPERTY NOTICE**
ALL INFORMATION CONTAINED IN THIS DOCUMENT IS THE SOLE PROPERTY OF VEOLIA WATER TECHNOLOGIES CANADA INC. AND IS PROTECTED BY ALL APPLICABLE LAWS, INCLUDING BUT NOT LIMITED TO COPYRIGHT AND OTHER INTELLECTUAL PROPERTY LAWS. THE DESIGN CONCEPTS AND INFORMATION CONTAINED HEREIN ARE PROPRIETARY TO V.W.T AND ARE SUBMITTED IN CONFIDENCE. THEY ARE NOT TRANSFERABLE. THEY MUST BE USED ONLY FOR THE PURPOSE FOR WHICH THE DOCUMENT IS EXPRESSLY SUBMITTED AND NO IMPLICIT LICENCE IS GRANTED OTHERWISE BY THE SUBMISSION OF THIS DOCUMENT. THEY ARE CONFIDENTIAL AND PRIVILEGED INFORMATION OF V.W.T. AND THEY MUST NOT BE DISCLOSED, REPRODUCED, LOANED, REMITTED OR USED IN ANY OTHER MANNER WITHOUT THE EXPRESS WRITTEN CONSENT OF V.W.T. V.W.T. ASSUMES NO RESPONSIBILITY OR LIABILITY FOR THE USE OF THIS DOCUMENT OR THE DESIGN CONCEPTS AND INFORMATION CONTAINED HEREIN FOR ANOTHER PROJECT, OR IN A MANNER THAT DOES NOT RELATE TO THE FITNESS OR PURPOSE OF THIS DOCUMENT. IN NO EVENT SHALL THIS DOCUMENT OR THE DESIGN CONCEPTS AND INFORMATION CONTAINED HEREIN BE USED IN A MANNER DETRIMENTAL TO THE INTEREST OF V.W.T. ALL COPYRIGHT, PATENT AND OTHER INTELLECTUAL PROPERTY RIGHTS ARE RESERVED. ACCEPTANCE OF THE DELIVERY OF THIS DOCUMENT CONSTITUTES AGREEMENT TO THESE TERMS AND CONDITIONS.

| | | DATE |
|---|---|---|
| DESIGNER | – | – |
| CHECKER | – | – |
| ENGINEER | – | – |
| SCALE: | N/A | |

TITLE: JB–002 SPIDFLOW T–02–320
CONTROL JUNCTION BOX
TERMINAL LAYOUT

CLIENT: WWTP UPGRADE
CITY OF IQALUIT

VEOLIA WATER TECHNOLOGIES CANADA INC. 4105 Sartelon, Saint-Laurent, Qc, Canada. Tel: (514) 334-7230

| PROJECT | DRAWING | INTERNAL | SHEET | REV |
|---|---|---|---|---|
| 5000218036–EPL | 0003–AU–VWT | – | 04 OF 05 | 5 |

| ITEM | DESCRIPTION | PART NUMBER | MANUF. | QTY | BY |
|---|---|---|---|---|---|
| 1 | NEMA 4X ENCLOSURE, C/W PAN 14R1311<br>DIM 14"H x 12"W x 6"D, FIBERGLASS REINFORCED POLYESTER | PJ14126RL | HAMMOND | 1 | ENV |
| 2 | TERMINAL 600VAC/DC, 20A WDU 2.5<br>C/W END PLATE 1050000000 | 1020000000 | WEIDMULLER | A/R | ENV |
| 3 | TERMINAL 600VAC/DC, 30A WDU 4<br>C/W END PLATE 1050000000 | 1020100000 | WEIDMULLER | A/R | ENV |
| 4 | TERMINAL 600VAC/DC, 50A WDU 6<br>C/W END PLATE 1050000000 OR SEPERATOR 1050100000 | 1020200000 | WEIDMULLER | A/R | ENV |
| 5 | KNIFE TERMINAL 300VAC/DC, 10A, WTR 2.5<br>C/W END PLATE 1050000000 | 1855610000 | WEIDMULLER | A/R | ENV |
| 6 | TERMINAL 2 LEVEL 300VAC/DC, 10A, WDK 2.5<br>C/W END PLATE 1059100000 | 1021500000 | WEIDMULLER | A/R | ENV |
| 7 | TERMINAL 3 LEVEL 300VAC/DC, 10A, DLD 2.5<br>C/W END PLATE 1784210000 | 1784180000 | WEIDMULLER | A/R | ENV |
| 8 | FUSE TERMINAL ¼ X 1¼, 300VAC/DC, 15A, WSI 4/2<br>C/W END PLATE 1880450000 | 1880430000 | WEIDMULLER | A/R | ENV |
| 9 | FUSE TERMINAL 5 X 20mm, 300VAC/DC, 15A, WSI 4 | 1886580000 | WEIDMULLER | A/R | ENV |
| 10 | FUSE TERMINAL 2 LEVEL 5 X 20mm, 300VAC/DC, 10A, KDKS 1/EN4<br>C/W END PLATE 9503330000 | 9503350000 | WEIDMULLER | A/R | ENV |
| 11 | FUSE TERMINAL 2 LEVEL ¼ X 1¼, 300VAC/DC, 10A, KDKS 1/35DB<br>C/W END PLATE 9532470000 | 9532440000 | WEIDMULLER | A/R | ENV |
| 12 | END STOPPER WEW 35/2 | 1061200000 | WEIDMULLER | A/R | ENV |
| 13 | COPPER GROUND BAR, #4-14 | 4C-190 | NSI-INDUSTRIES | A/R | ENV |
| 14 | COPPER GROUND LUG, 600VAC, #6-14, STR | CB35-36-LY | PANDUIT | A/R | ENV |

BAR = 1" AT PLOT SCALE

REF: A6798A

STD: "B" 11x17

| REV | DESCRIPTION | DATE | REVD | CHKD | APVD | ECN |
|---|---|---|---|---|---|---|
| 5 | AS BUILT \|\| FIELD MODIFICATION | 2020-03-05 | SB | RA | – | – |
| 4 | AS BUILT \|\| FIELD MODIFICATION | 2019-07-30 | JC | RA | – | – |
| 3 | AS BUILT | 2019-03-26 | HZ | RA | – | – |
| 2 | FOR FABRICATION | 2019-03-19 | HZ | RA | – | – |
| 1 | FOR APPROVAL | 2019-01-09 | HZ | RA | – | – |

**CONFIDENTIALITY AND INTELLECTUAL PROPERTY NOTICE**
ALL INFORMATION CONTAINED IN THIS DOCUMENT IS THE SOLE PROPERTY OF VEOLIA WATER TECHNOLOGIES CANADA INC. AND IS PROTECTED BY ALL APPLICABLE LAWS, INCLUDING BUT NOT LIMITED TO COPYRIGHT AND OTHER INTELLECTUAL PROPERTY LAWS. THE DESIGN CONCEPTS AND INFORMATION CONTAINED HEREIN ARE PROPRIETARY TO V.W.T AND ARE SUBMITTED IN CONFIDENCE. THEY ARE NOT TRANSFERABLE. THEY MUST BE USED ONLY FOR THE PURPOSE FOR WHICH THE DOCUMENT IS EXPRESSLY SUBMITTED AND NO IMPLICIT LICENCE IS GRANTED OTHERWISE BY THE SUBMISSION OF THIS DOCUMENT. THEY ARE CONFIDENTIAL AND PRIVILEGED INFORMATION OF V.W.T. AND THEY MUST NOT BE DISCLOSED, REPRODUCED, LOANED, REMITTED OR USED IN ANY OTHER MANNER WITHOUT THE EXPRESS WRITTEN CONSENT OF V.W.T. V.W.T. ASSUMES NO RESPONSIBILITY OR LIABILITY FOR THE USE OF THIS DOCUMENT OR THE DESIGN CONCEPTS AND INFORMATION CONTAINED HEREIN FOR ANOTHER PROJECT, OR IN A MANNER THAT DOES NOT RELATE TO THE FITNESS OR PURPOSE OF THIS DOCUMENT. IN NO EVENT SHALL THIS DOCUMENT OR THE DESIGN CONCEPTS AND INFORMATION CONTAINED HEREIN BE USED IN A MANNER DETRIMENTAL TO THE INTEREST OF V.W.T. ALL COPYRIGHT, PATENT AND OTHER INTELLECTUAL PROPERTY RIGHTS ARE RESERVED. ACCEPTANCE OF THE DELIVERY OF THIS DOCUMENT CONSTITUTES AGREEMENT TO THESE TERMS AND CONDITIONS.

| | |
|---|---|
| DESIGNER | DATE |
| – | – |
| CHECKER | DATE |
| – | – |
| ENGINEER | DATE |
| – | – |
| SCALE: | N/A |

TITLE
JB-002 SPIDFLOW T-02-320
CONTROL JUNCTION BOX
BILL OF MATERIAL

CLIENT
WWTP UPGRADE
CITY OF IQALUIT

VEOLIA WATER TECHNOLOGIES CANADA INC. 4105 Sartelon, Saint-Laurent, Qc, Canada. Tel: (514) 334-7230

| PROJECT | DRAWING | INTERNAL | SHEET | REV |
|---|---|---|---|---|
| 5000218036-EPL – 0003-AU-VWT | | – | 05 OF 05 | 5 |

Mar 09, 2020 16:07:04 – G:\Projets A67XX\A6798A @ A6798D – VEOLIA – 5000218036 Iqaluit WWTP Upgrade\DOC\DESSIN\000-DRAWINGS\JB-002\REV 5\5000218036-EPL-0003-AU-VWT-005.dwg – sbouya

BAR = 1" AT PLOT SCALE
REF: A6798A
STD: "B" 11x17

Mar 09, 2020 16:07:05 - G:\Projets A67XX\A6798A @ A6798D - VEOLIA - 5000218036 Iqaluit WWTP Upgrade\DOC\DESSIN\000-DRAWINGS\JB-002\REV 5\5000218036-EID-0003-AU-VWT-001.dwg - sbouya




| REV | DESCRIPTION | DATE | REVD | CHKD | APVD | ECN |
|---|---|---|---|---|---|---|
| | | | | | | |
| | | | | | | |
| 4 | AS BUILT \|\| FIELD MODIFICATION | 2020-03-05 | SB | RA | - | - |
| 3 | AS BUILT | 2019-03-26 | HZ | RA | - | - |
| 2 | FOR FABRICATION | 2019-03-19 | MR | RA | - | - |
| 1 | FOR APPROVAL | 2019-01-09 | HZ | RA | - | - |

**CONFIDENTIALITY AND INTELLECTUAL PROPERTY NOTICE**
ALL INFORMATION CONTAINED IN THIS DOCUMENT IS THE SOLE PROPERTY OF VEOLIA WATER TECHNOLOGIES CANADA INC. AND IS PROTCTED BY ALL APPLICABLE LAWS, INCLUDING BUT NOT LIMITED TO COPYRIGHT AND OTHER INTELLECTUAL PROPERTY LAWS. THE DESIGN CONCEPTS AND INFORMATION CONTAINED HEREIN ARE PROPRIETARY TO V.W.T AND ARE SUBMITTED IN CONFIDENCE. THEY ARE NOT TRANSFERABLE. THEY MUST BE USED ONLY FOR THE PURPOSE FOR WHICH THE DOCUMENT IS EXPRESSLY SUBMITTED AND NO IMPLICIT LICENCE IS GRANTED OTHERWISE BY THE SUBMISSION OF THIS DOCUMENT. THEY ARE CONFIDENTIAL AND PRIVILEGED INFORMATION OF V.W.T. AND THEY MUST NOT BE DISCLOSED, REPRODUCED, LOANED, REMITTED OR USED IN ANY OTHER MANNER WITHOUT THE EXPRESS WRITTEN CONSENT OF V.W.T. V.W.T. ASSUMES NO RESPONSIBILITY OR LIABILITY FOR THE USE OF THIS DOCUMENT OR THE DESIGN CONCEPTS AND INFORMATION CONTAINED HEREIN FOR ANOTHER PROJECT, OR IN A MANNER THAT DOES NOT RELATE TO THE FITNESS OR PURPOSE OF THIS DOCUMENT. IN NO EVENT SHALL THIS DOCUMENT OR THE DESIGN CONCEPTS AND INFORMATION CONTAINED HEREIN BE USED IN A MANNER DETRIMENTAL TO THE INTEREST OF V.W.T. ALL COPYRIGHT, PATENT AND OTHER INTELLECTUAL PROPERTY RIGHTS ARE RESERVED. ACCEPTANCE OF THE DELIVERY OF THIS DOCUMENT CONSTITUTES AGREEMENT TO THESE TERMS AND CONDITIONS.

| | |
|---|---|
| DESIGNER | DATE |
| - | - |
| CHECKER | DATE |
| - | - |
| ENGINEER | DATE |
| - | - |
| SCALE: | N/A |

TITLE
JB-002 SPIDFLOW T-02-320
CONTROL JUNCTION BOX
FIELD WIRING

CLIENT
WWTP UPGRADE
CITY OF IQALUIT

VEOLIA
VEOLIA WATER TECHNOLOGIES CANADA INC. 4105 Sartelon, Saint-Laurent, Qc, Canada. Tel: (514) 334-7230

| PROJECT | DRAWING | INTERNAL | SHEET | REV |
|---|---|---|---|---|
| 5000218036 | EID - 0003-AU-VWT | - | 01 OF 02 | 4 |

BAR = 1" AT PLOT SCALE
REF: A6798A
STD: "B" 11x17

Mar 09, 2020 16:07:07 - G:\Projets A67XX\A6798A @ A6798D - VEOLIA - 5000218036 Iqaluit WWTP Upgrade\DOC\DESSIN\000-DRAWINGS\JB-002_REV 5\5000218036-EID-0003-AU-VWT-002.dwg - sbouya

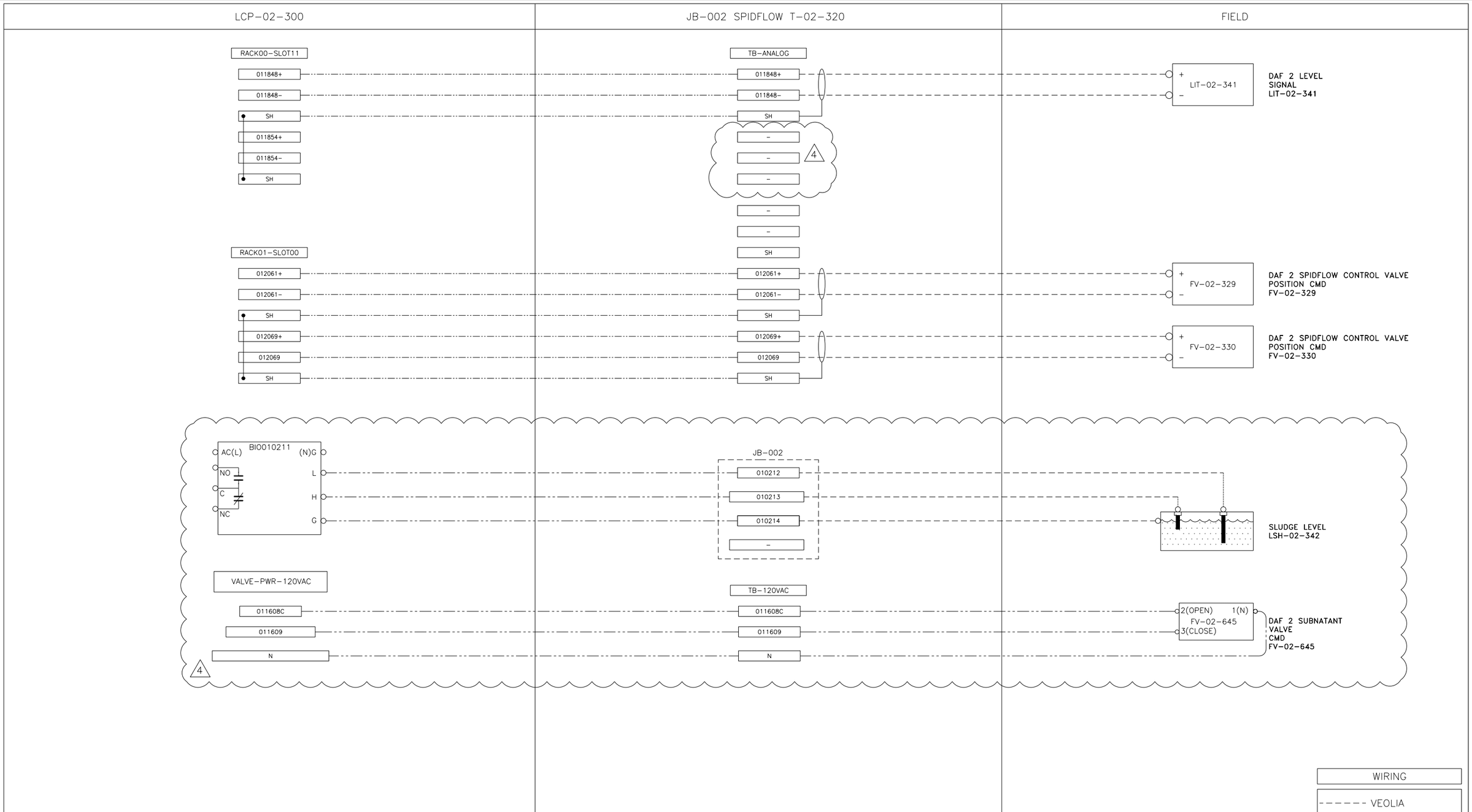


| REV | DESCRIPTION | DATE | REVD | CHKD | APVD | ECN |
|---|---|---|---|---|---|---|
| | | | | | | |
| | | | | | | |
| 4 | AS BUILT \|\| FIELD MODIFICATION | 2020-03-05 | SB | RA | – | – |
| 3 | AS BUILT | 2019-03-26 | HZ | RA | – | – |
| 2 | FOR FABRICATION | 2019-03-19 | HZ | RA | – | – |
| 1 | FOR APPROVAL | 2019-01-09 | HZ | RA | – | – |

**CONFIDENTIALITY AND INTELLECTUAL PROPERTY NOTICE**
ALL INFORMATION CONTAINED IN THIS DOCUMENT IS THE SOLE PROPERTY OF VEOLIA WATER TECHNOLOGIES CANADA INC. AND IS PROTECTED BY ALL APPLICABLE LAWS, INCLUDING BUT NOT LIMITED TO COPYRIGHT AND OTHER INTELLECTUAL PROPERTY LAWS. THE DESIGN CONCEPTS AND INFORMATION CONTAINED HEREIN ARE PROPRIETARY TO V.W.T AND ARE SUBMITTED IN CONFIDENCE. THEY ARE NOT TRANSFERABLE. THEY MUST BE USED ONLY FOR THE PURPOSE FOR WHICH THE DOCUMENT IS EXPRESSLY SUBMITTED AND NO IMPLICIT LICENCE IS GRANTED OTHERWISE BY THE SUBMISSION OF THIS DOCUMENT. THEY ARE CONFIDENTIAL AND PRIVILEGED INFORMATION OF V.W.T. AND THEY MUST NOT BE DISCLOSED, REPRODUCED, LOANED, REMITTED OR USED IN ANY OTHER MANNER WITHOUT THE EXPRESS WRITTEN CONSENT OF V.W.T. V.W.T. ASSUMES NO RESPONSIBILITY OR LIABILITY FOR THE USE OF THIS DOCUMENT OR THE DESIGN CONCEPTS AND INFORMATION CONTAINED HEREIN FOR ANOTHER PROJECT, OR IN A MANNER THAT DOES NOT RELATE TO THE FITNESS OR PURPOSE OF THIS DOCUMENT. IN NO EVENT SHALL THIS DOCUMENT OR THE DESIGN CONCEPTS AND INFORMATION CONTAINED HEREIN BE USED IN A MANNER DETRIMENTAL TO THE INTEREST OF V.W.T. ALL COPYRIGHT, PATENT AND OTHER INTELLECTUAL PROPERTY RIGHTS ARE RESERVED. ACCEPTANCE OF THE DELIVERY OF THIS DOCUMENT CONSTITUTES AGREEMENT TO THESE TERMS AND CONDITIONS.

| | | |
|---|---|---|
| DESIGNER | – | DATE – |
| CHECKER | – | DATE – |
| ENGINEER | – | DATE – |
| SCALE: | N/A | |

TITLE
JB-002 SPIDFLOW T-02-320
CONTROL JUNCTION BOX
FIELD WIRING

CLIENT
WWTP UPGRADE
CITY OF IQALUIT

VEOLIA
VEOLIA WATER TECHNOLOGIES CANADA INC. 4105 Sartelon, Saint-Laurent, Qc, Canada. Tel: (514) 334-7230

| PROJECT DRAWING | INTERNAL | SHEET | REV |
|---|---|---|---|
| 5000218036-EID – 0003-AU-VWT | – | 02 OF 02 | 4 |

# APPENDIX B

# APPROVED SHOP DRAWINGS

REVIEWED BY CONTRACTOR
Kudlik Construction Ltd.
NAME: Sandra Rousseau P.Eng
DATE: Jul 12, 2018

Mécanique Nordique
Plumbing
Heating
Ventillation
mecanique.nordique@hotmail.com

1255 Rue J.A.Bombardier
Lévis, Québec
G7A 2P4
Téléphone: 418-496-1109
Télécopieur: 418-496-3803

# IQALUIT WWTP UPGRADE

## DRAWING FOR APPROVAL

Ingineer : NUNAMI STANTEC

## DRAWING #: AD-029

Section 25 30 02
Article 2.27.1
Plans M-601
Application : Wirings Conduit , Terminations , Boxes
Brand : Differents
Model : Differents
Revised # :
Supplyer : JOHNSON CONTROLS

Pages incl. 291
Date : **2018-07-12**
By : **Mécanique Nordique Inc.**

STANTEC PROJECT #: 110126045
SUBMITTAL # AD-029
This review by Stantec is for general conformance with the design concept of Stantec's design of the:
☐ Architectural ☑ Electrical
☐ Structural ☐ Other
☐ Mechanical
component(s) only and does not mean that Stantec has verified or approves the shop drawing(s). The Contractor remains solely responsible for the shop drawing(s) and this review by Stantec does not relieve the Contractor of the Contractor's responsibility for errors or omissions in the shop drawing(s) or for meeting all requirements of the contract documents. This review does not mean that Stantec approves the detailed design inherent in the shop drawing, responsibility for which shall remain with the Contractor submitting same, nor does this review mean that Stantec accepts any deviation of the shop drawing(s) from the contract documents. The Contractor is responsible for confirming all dimensions and correlating them at the job site, for all construction means, methods and techniques, and for coordination of construction work of all trades, including coordination of all shop drawings.
Stantec
☑ REVIEWED
☐ REVIEWED, AS NOTED
☐ REVISE AND RESUBMIT
☐ NOT REVIEWED
DATE 2018-07-30
BY Konrad Goluch

INSTALLATION TYPE
CLASS 0 : NO CLASSIFICATION

DRAWING REFERENCE : 3309-INST-1

1.1 E.M.T. SET-SCREW COUPLING
1.2 ELECTRICAL METALLIC TUBING E.M.T.
1.3 E.M.T. SET-SCREW FITTING
1.4 4 INCH. SQUARE BOXE COVER
1.5 4 INCH. SQUARE BOXE
1.6 UTILITY BOXE COVER
1.7 ARMOURED CABLE/FLEXIBLE CONDUIT-ONE SCREW FITTING
1.8 UTILITY BOXE
1.9 LIQUATITE FLEXIBLE CONDUIT
1.10 WIRE/CABLE TYPE

CATEGORY 1: WET LOCATION

DRAWING REFERENCE: 3309-INST-2

2.1 RIGID PVC CONDUIT COUPLING
2.2 PVC STRAP 2 HOLES
2.3 RIGID TUBING PVC CONDUIT
2.4 RIGID PVC CONDUIT TERMINAL ADAPTER
2.5 JUNCTION BOX WITH GASKET
2.6 UTILITY BOXE SINGLE GANG
2.7 LIQUIDTIGHT ZINC ALLOY FITTING
2.8 LIQUATITE FLEXIBLE CONDUIT STEEL

CLASS 1, ZONE 2 AND CATEGORY 1

DRAWING REFERENCE : 3309-INST-3

3.1 CONDULET CONDUIT OUTLET
3.2 VINYL INSULATED BUTT SPLICE
3.3 FS BOXE FSC
3.4 BLANK COVER GASKET
3.5 STAR TECK FITTING
3.6 WIRE/CABLE TYPE

*tous droits réservés ©2017 copyright*
service technique solution inc.

**INSTALLATION TYPE FOR CLASS SHOWN:**
- ☑ CLASS 0: NO CLASSIFICATION
- ☐ CATEGORY 1: WET LOCATION
- ☐ CLASS 1, ZONE2 AND CATEGORY 1

SUBMITTED FOR APPROVAL

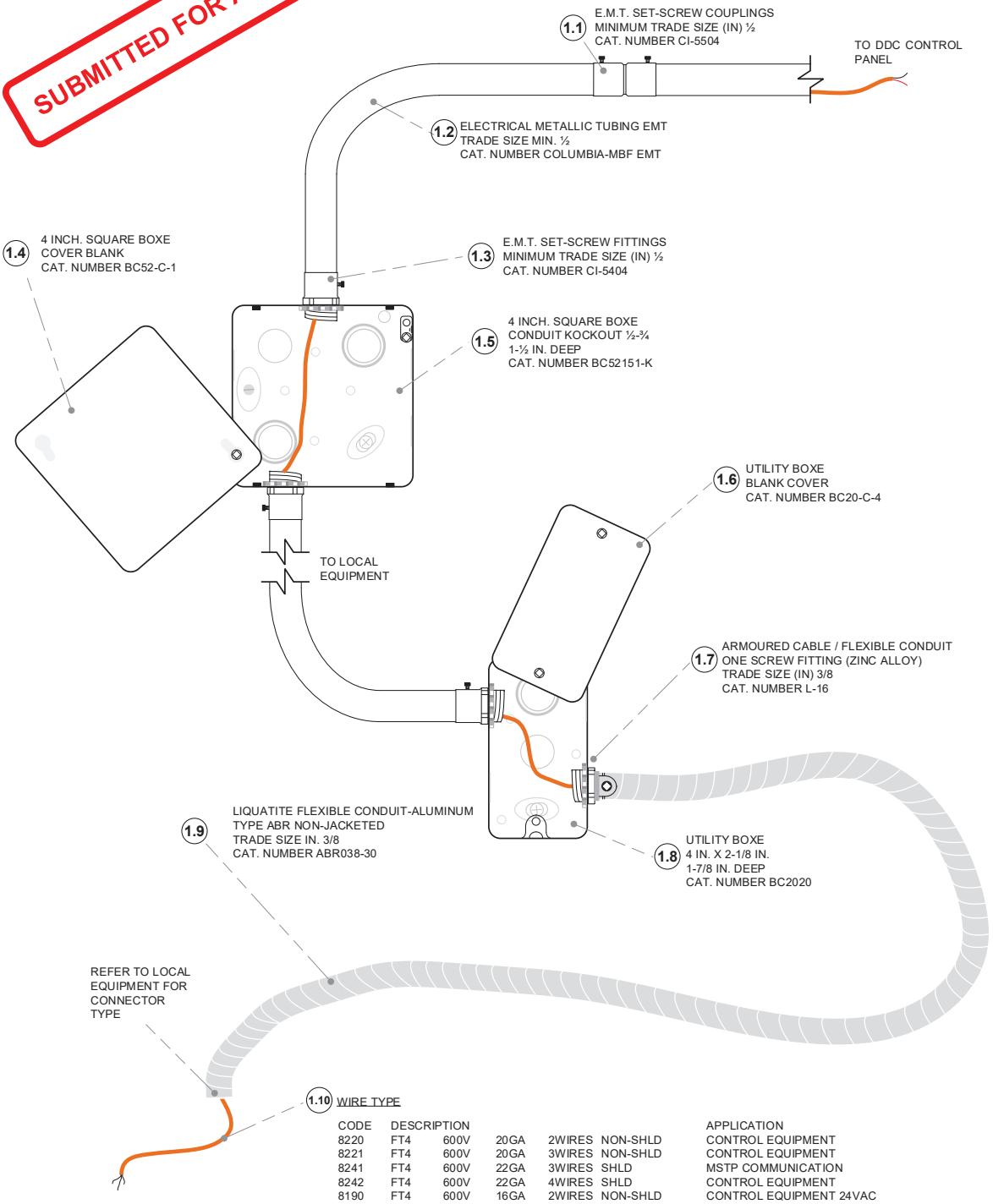


| CODE | DESCRIPTION | | | | | APPLICATION |
|---|---|---|---|---|---|---|
| 8220 | FT4 | 600V | 20GA | 2WIRES | NON-SHLD | CONTROL EQUIPMENT |
| 8221 | FT4 | 600V | 20GA | 3WIRES | NON-SHLD | CONTROL EQUIPMENT |
| 8241 | FT4 | 600V | 22GA | 3WIRES | SHLD | MSTP COMMUNICATION |
| 8242 | FT4 | 600V | 22GA | 4WIRES | SHLD | CONTROL EQUIPMENT |
| 8190 | FT4 | 600V | 16GA | 2WIRES | NON-SHLD | CONTROL EQUIPMENT 24VAC |

SEE DATA SHEET FOR MORE DETAILS

CLIENT
**SOCIÉTÉ DE CONTRÔLE JOHNSON S.E.C.**
765 avenue Godin, Ville de Québec
QC, Canada G1M 2W8

PROJET
**WASTEWATER TREATMENT PLANT UPG.**
City of Iqaluit
NU, Canada

TITRE
**INSTALLATION TYPE CLASSIFICATION AREA REF. E002**


STS service technique solution
Service Technique Solution Inc.
2112 ave. de la Rivière-Jaune
Québec, QC
G2N 1T5
Tel.: (418) 849-4004
Fax: (418) 841-7820
R.B.Q. 5605-0495-01


| REPRESENTANT | GERANT DE PROJET | CONCEPTEUR |
|---|---|---|
| S. TURBIDE | S. TURBIDE | S. TURBIDE |

DESSINÉ PAR: S.T. 04/07/18
APPROUVÉ PAR: S.L. 05/07/18

| DESSIN DE REFERENCE | NO. | REVISION | ECN | DATE | PAR |
|---|---|---|---|---|---|
| | | | | | |

NUMERO PROJET **3309-06-06**
NUMERO DESSIN **3309-INST-1**
PAGE **1 / 1**


TOUS DROITS RÉSERVÉS/COPYRIGHT SERVICE TECHNIQUE SOLUTION INC.

**INSTALLATION TYPE FOR CLASS SHOWN:**

- ☐ CLASS 0: NO CLASSIFICATION
- ☑ CATEGORY 1: WET LOCATION
- ☐ CLASS 1, ZONE2 AND CATEGORY 1

SUBMITTED FOR APPROVAL

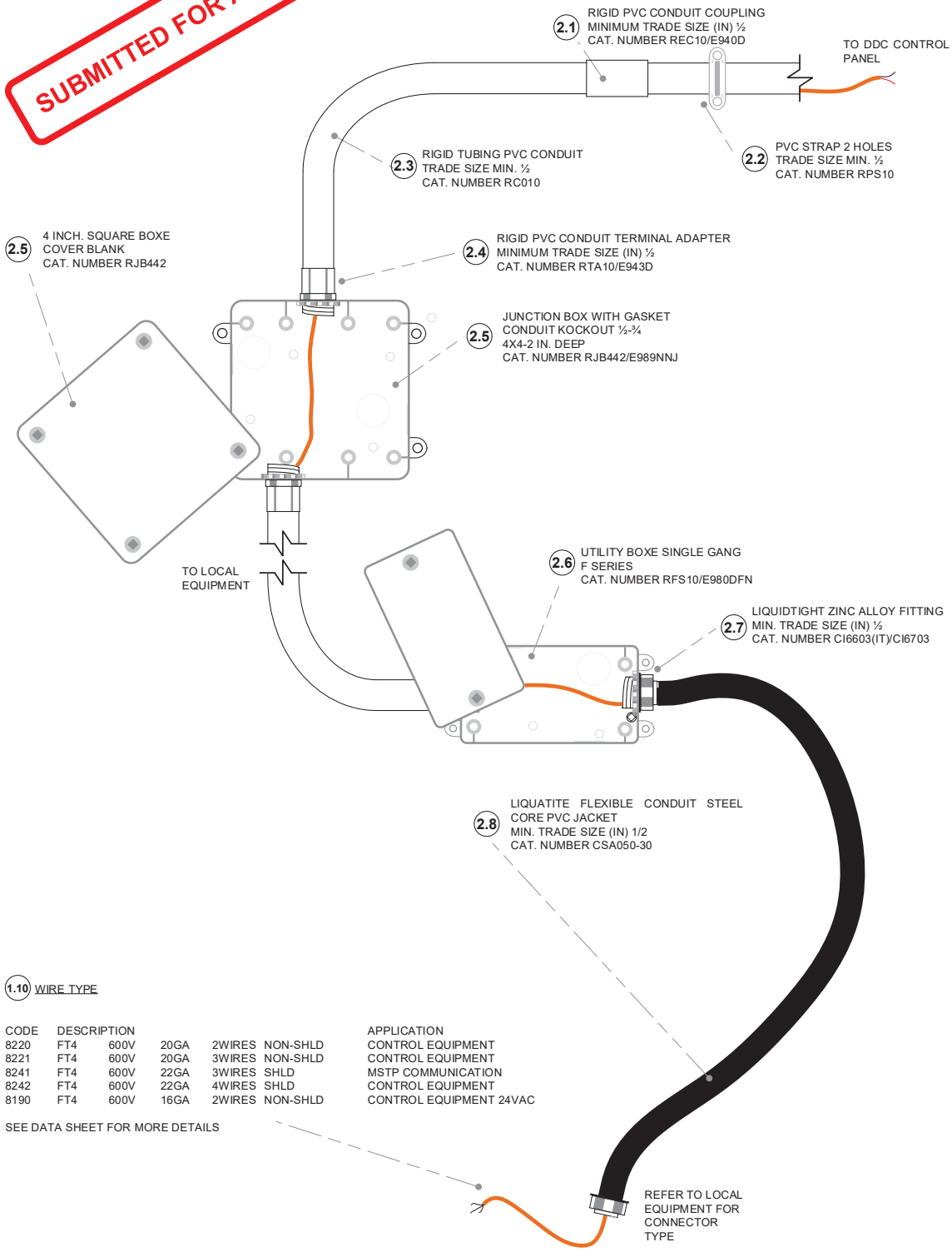


1.10 WIRE TYPE

| CODE | DESCRIPTION | | | | | APPLICATION |
|---|---|---|---|---|---|---|
| 8220 | FT4 | 600V | 20GA | 2WIRES | NON-SHLD | CONTROL EQUIPMENT |
| 8221 | FT4 | 600V | 20GA | 3WIRES | NON-SHLD | CONTROL EQUIPMENT |
| 8241 | FT4 | 600V | 22GA | 3WIRES | SHLD | MSTP COMMUNICATION |
| 8242 | FT4 | 600V | 22GA | 4WIRES | SHLD | CONTROL EQUIPMENT |
| 8190 | FT4 | 600V | 16GA | 2WIRES | NON-SHLD | CONTROL EQUIPMENT 24VAC |

SEE DATA SHEET FOR MORE DETAILS

CLIENT
**SOCIÉTÉ DE CONTRÔLE JOHNSON S.E.C.**
765 avenue Godin, Ville de Québec
QC, Canada G1M 2W8

PROJET
**WASTEWATER TREATMENT PLANT UPG.**
City of Iqaluit
NU, Canada

TITRE
**INSTALLATION TYPE CLASSIFICATION AREA REF. E002**


STS service technique solution
Service Technique Solution Inc.
2112 ave. de la Rivière-Jaune
Québec, QC
G2N 1T5
Tel.: (418) 849-4004
Fax: (418) 841-7820
R.B.Q. 5605-0495-01


| REPRESENTANT | GERANT DE PROJET | CONCEPTEUR |
|---|---|---|
| S. TURBIDE | S. TURBIDE | S. TURBIDE |

DESSINÉ PAR: S.T. 04/07/18
APPROUVÉ PAR: S.L. 05/07/18

| DESSIN DE REFERENCE | NO. | REVISION | ECN | DATE | PAR |
|---|---|---|---|---|---|
| | | | | | |

NUMERO PROJET **3309-06-06**
NUMERO DESSIN **3309-INST-2**
PAGE **1 / 1**


TOUS DROITS RÉSERVÉS/COPYRIGHT SERVICE TECHNIQUE SOLUTION INC.

SUBMITTED FOR APPROVAL

**INSTALLATION TYPE FOR CLASS SHOWN:**

- ☐ CLASS 0: NO CLASSIFICATION
- ☐ CATEGORY 1: WET LOCATION
- ☑ CLASS 1, ZONE2 AND CATEGORY 1

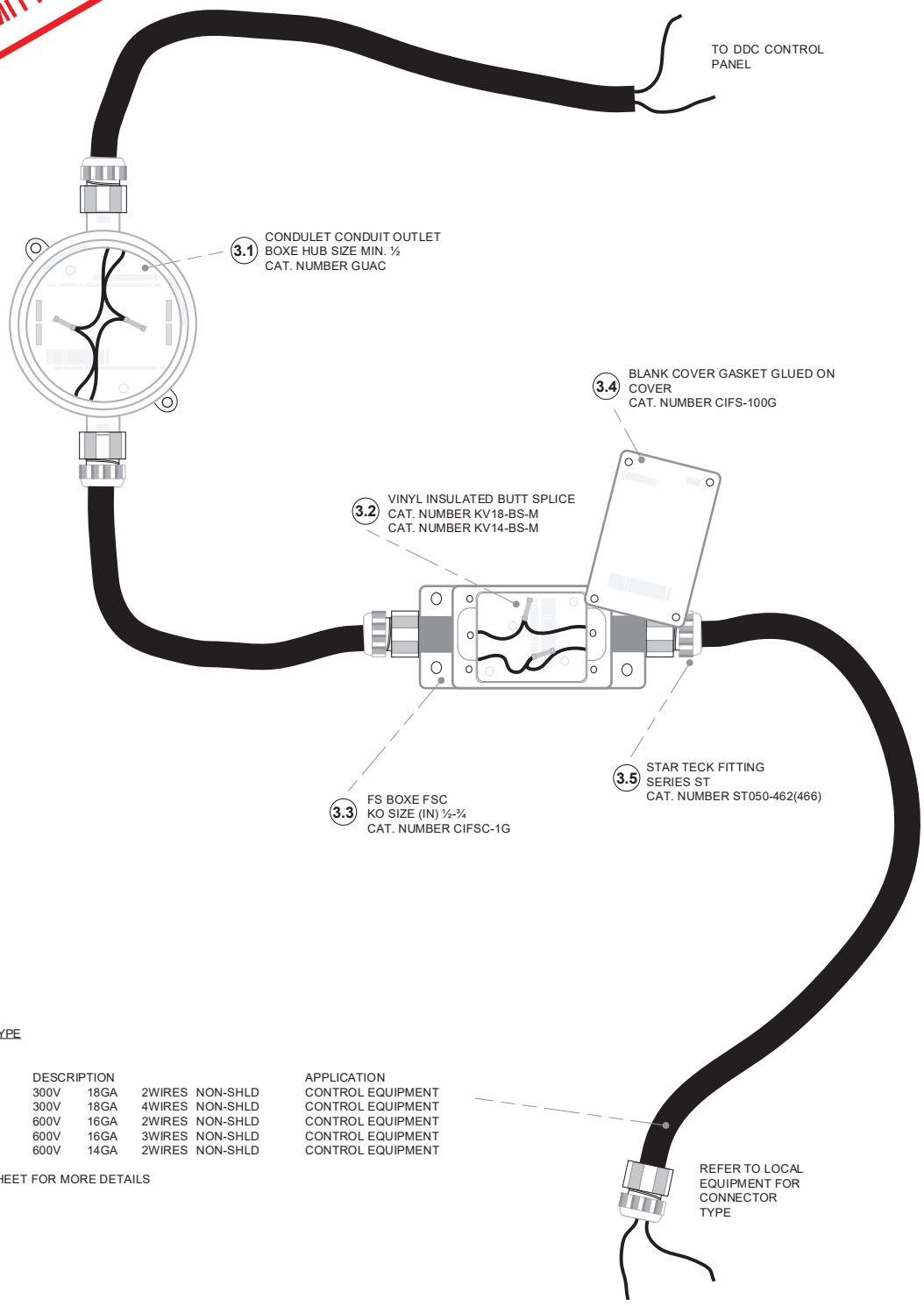


3.6 WIRE TYPE

| CODE | DESCRIPTION | | | | APPLICATION |
|---|---|---|---|---|---|
| 33H1801X | 300V | 18GA | 2WIRES | NON-SHLD | CONTROL EQUIPMENT |
| 33H1802X | 300V | 18GA | 4WIRES | NON-SHLD | CONTROL EQUIPMENT |
| 46A1602-40 | 600V | 16GA | 2WIRES | NON-SHLD | CONTROL EQUIPMENT |
| 46A1603-40 | 600V | 16GA | 3WIRES | NON-SHLD | CONTROL EQUIPMENT |
| 19A1402 | 600V | 14GA | 2WIRES | NON-SHLD | CONTROL EQUIPMENT |

SEE DATA SHEET FOR MORE DETAILS

CLIENT
**SOCIÉTÉ DE CONTRÔLE JOHNSON S.E.C.**
765 avenue Godin, Ville de Québec
QC, Canada G1M 2W8

PROJET
**WASTEWATER TREATMENT PLANT UPG.**
City of Iqaluit
NU, Canada

TITRE
**INSTALLATION TYPE CLASSIFICATION AREA REF. E002**


STS service technique solution
Service Technique Solution Inc.
2112 ave. de la Rivière-Jaune
Québec, QC
G2N 1T5
Tel.: (418) 849-4004
Fax: (418) 841-7820
R.B.Q. 5605-0495-01


| REPRESENTANT | GERANT DE PROJET | CONCEPTEUR |
|---|---|---|
| S. TURBIDE | S. TURBIDE | S. TURBIDE |

| DESSINÉ PAR: | APPROUVÉ PAR: |
|---|---|
| S.T. 04/07/18 | S.L. 05/07/18 |

| DESSIN DE REFERENCE | NO. | REVISION | ECN | DATE | PAR |
|---|---|---|---|---|---|
| | | | | | |

NUMERO PROJET **3309-06-06**

NUMERO DESSIN **3309-INST-3**

PAGE **1 / 1**

TOUS DROITS RÉSERVÉS/COPYRIGHT SERVICE TECHNIQUE SOLUTION INC.

# EMT

## Set Screw Fittings

CI5404 (-IT) / CI5408 (-IT)



CI5410 (-IT) / CI5432 (-IT)



c UL us LISTED

| Cat. No. | | Trade Size (in.) |
|---|---|---|
| Regular | Insulated | |
| **EMT Set Screw Fittings** (Steel) | | |
| CI5404 | CI5404-IT | 1/2 |
| CI5406 | CI5406-IT | 3/4 |
| CI5408 | CI5408-IT | 1 |
| CI5410 | CI5410-IT | 1-1/4 |
| CI5412 | CI5412-IT | 1-1/2 |
| CI5416 | CI5416-IT | 2 |
| CI5420 | CI5420-IT | 2-1/2 |
| CI5424 | CI5424-IT | 3 |
| CI5432 | CI5432-IT | 4 |

Concrete-tight

CI5004 (-IT) / CI5008 (-IT)



CI5010 (-IT) / CI5016 (-IT)



CI5020 (-IT) / CI5032 (-IT)



| Cat. No. | | Trade Size (in.) |
|---|---|---|
| Regular (Zinc) | Insulated (Steel) | |
| **EMT Set Screw Fittings** (Zinc) | | |
| CI5004 | CI5004-IT | 1/2 |
| CI5006 | CI5006-IT | 3/4 |
| CI5008 | CI5008-IT | 1 |
| CI5010 | CI5010-IT | 1-1/4 |
| CI5012 | CI5012-IT | 1-1/2 |
| CI5016 | CI5016-IT | 2 |
| CI5020 | CI5020-IT | 2-1/2 |
| CI5024 | CI5024-IT | 3 |
| CI5032 | CI5032-IT | 4 |

Concrete-tight. Zinc Die Cast Locknut. IT: with insulated throat.

CI5054 / CI5058



| Cat. No. | Trade Size (in.) | Offset (in.) |
|---|---|---|
| **EMT Set Screw Offset Body Fittings** (Zinc Alloy) | | |
| CI5054 | 1/2 | 3/8 |
| CI5056 | 3/4 | 3/4 |
| CI5058 | 1 | 3/4 |

Concrete-tight.

TC121A-FA






| Cat. No. | | Trade Size (in.) | Std. Pkg. Qty |
|---|---|---|---|
| Regular | Insulated | | |
| **EMT / Fire Alarm Set Screw Fittings** (Red Steel) | | | |
| TC121A-FA | TC721A-FA | 1/2 | 50 |
| TC122A-FA | TC722A-FA | 3/4 | 50 |
| TC123A-FA | TC723A-FA | 1 | 25 |

# EMT

## Set Screw Couplings

CI5504 / CI5508



CI5120 / CI5132



CI5104 / CI5116



CI5510 / CI5532



1.1

| Cat. No. | | Trade Size (in.) |
|---|---|---|
| Steel | Zinc Alloy | |
| **EMT Set Screw Couplings** | | |
| CI5504* | CI5104 | 1/2 |
| CI5506* | CI5106 | 3/4 |
| CI5508* | CI5108 | 1 |
| CI5510* | CI5110 | 1-1/4 |
| CI5512* | CI5112 | 1-1/2 |
| CI5516* | CI5116 | 2 |
| CI5520* | CI5120 | 2-1/2 |
| CI5524* | CI5124 | 3 |
| CI5532* | CI5132 | 4 |

* cULus Listed only
Concrete-tight

CI5164 / CI5168



| Cat. No. | Trade Size (in.) | |
|---|---|---|
| | EMT | Rigid |
| **EMT / Rigid Couplings** (Zinc Alloy) | | |
| CI5164 | 1/2 | 1/2 |
| CI5166 | 3/4 | 3/4 |
| CI5168 | 1 | 1 |

Concrete-tight

TK121A-FA






| Cat. No. | Trade Size (in.) | Std. Pkg. Qty |
|---|---|---|
| **EMT / Fire Alarm Set Screw Couplings** (Red Steel) | | |
| TK121A-FA | 1/2 | 50 |
| TK122A-FA | 3/4 | 50 |
| TK123A-FA | 1 | 25 |

# EMT

## Compression Fittings and Couplings

- Models from 2-1/2 to 4 in. are also suitable for rigid and IMC conduit

TC111A



TC711A



| Cat. No. | | Trade Size (in.) |
|---|---|---|
| Regular | Insulated | |
| **EMT Compression Fittings** (Zinc-plated steel) | | |
| TC111A | TC711A | 1/2 |
| TC112A | TC712A | 3/4 |
| TC113A | TC713A | 1 |
| TC114A* | TC714A | 1-1/4 |
| TC115A* | TC715A | 1-1/2 |
| TC116A* | TC716A | 2 |
| TC117A | TC717A | 2-1/2 |
| TC118A | TC718A | 3 |
| TC119A | TC719A | 3-1/2 |
| TC1110A | TC7110A | 4 |

UL FILE NO. E-16592. * O-rings are supplied.
Concrete-tight.

TK111A



| Cat. No. | Trade Size (in.) |
|---|---|
| **EMT Compression Couplings** (Zinc-plated steel) | |
| TK111A | 1/2 |
| TK112A | 3/4 |
| TK113A | 1 |
| TK114A | 1-1/4 |
| TK115A | 1-1/2 |
| TK116A | 2 |
| TK117A | 2-1/2 |
| TK118A | 3 |
| TK119A | 3-1/2 |
| TK1110A | 4 |

UL FILE NO. E-16592.
Concrete-tight.

CI5804 (-IT) / CI5832 (-IT)



Zinc Die Cast Locknut
**IT**: with insulated throat

| Cat. No. | | Trade Size (in.) |
|---|---|---|
| Regular | Insulated | |
| **EMT Compression Fittings** (Zinc Alloy) | | |
| CI5804 | CI5804-IT | 1/2 |
| CI5806 | CI5806-IT | 3/4 |
| CI5808 | CI5808-IT | 1 |
| CI5810 | CI5810-IT | 1-1/4 |
| CI5812 | CI5812-IT | 1-1/2 |
| CI5816 | CI5816-IT | 2 |
| CI5820 | CI5820-IT | 2-1/2 |
| CI5824 | CI5824-IT | 3 |
| CI5832 | CI5832-IT | 4 |

Concrete-tight.

CI5904 / CI5932



| Cat. No. | Trade Size (in.) |
|---|---|
| **EMT Compression Couplings** (Zinc Alloy) | |
| CI5904 | 1/2 |
| CI5906 | 3/4 |
| CI5908 | 1 |
| CI5910 | 1-1/4 |
| CI5912 | 1-1/2 |
| CI5916 | 2 |
| CI5920 | 2-1/2 |
| CI5924 | 3 |
| CI5932 | 4 |

Concrete-tight.

# EMT

## Wet-location fittings



CI5612-IT-WL






CI5706-WL



CI5620-WL

## Specifications

**Material:** Steel body and steel locknut
**Finish:** Electro zinc plated
**Liner (insulated fittings only):** Nylon
**Threads:** Hub threads (NPS)
**Sealing Gasket:** Neoprene
**Sealing Ring:** Nylon
**Use:** Wet locations, concrete-tight

UL Listed Raintight (File E-16592)
UL514B / CSAC22.2–N°18.3
NEMA FB-1
NEMA 3R

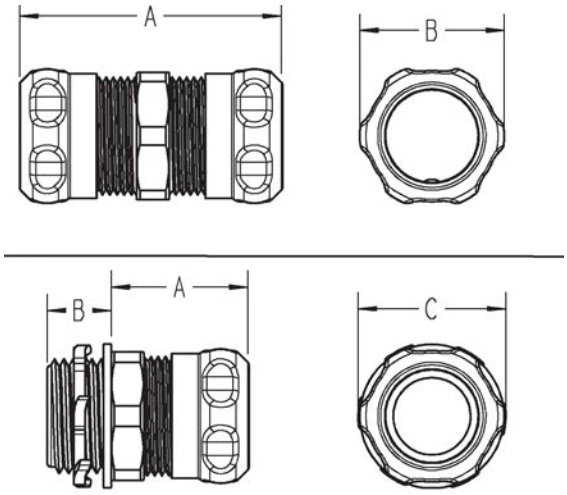


## Wet-location EMT compression fittings

| Cat. No. | Hub Size (in.) | Dimensions (in.) | | | Std. Ctn. |
|---|---|---|---|---|---|
| | | A | B | C | |
| Non-insulated | | | | | |
| CI5604-WL | ½ | 1.22 | 0.47 | 1.14 | 100 |
| CI5606-WL | ¾ | 1.21 | 0.48 | 1.38 | 50 |
| CI5608-WL | 1 | 1.30 | 0.50 | 1.67 | 25 |
| CI5610-WL | 1-¼ | 1.50 | 0.60 | 2.06 | 25 |
| CI5612-WL | 1-½ | 1.53 | 0.65 | 2.27 | 20 |
| CI5616-WL | 2 | 1.67 | 0.73 | 2.77 | 10 |
| CI5620-WL | 2-½ | 2.77 | 0.87 | 3.65 | 5 |
| CI5624-WL | 3 | 2.75 | 0.87 | 4.30 | 5 |
| CI5632-WL | 4 | 3.12 | 0.92 | 5.23 | 5 |
| Insulated | | | | | |
| CI5604-IT-WL | ½ | 1.22 | 0.54 | 1.14 | 100 |
| CI5606-IT-WL | ¾ | 1.21 | 0.55 | 1.38 | 50 |
| CI5608-IT-WL | 1 | 1.30 | 0.57 | 1.67 | 25 |
| CI5610-IT-WL | 1-¼ | 1.50 | 0.69 | 2.06 | 25 |
| CI5612-IT-WL | 1-½ | 1.53 | 0.74 | 2.27 | 20 |
| CI5616-IT-WL | 2 | 1.67 | 0.82 | 2.77 | 10 |
| CI5620-IT-WL | 2-½ | 2.77 | 0.99 | 3.65 | 5 |
| CI5624-IT-WL | 3 | 2.75 | 0.99 | 4.30 | 5 |
| CI5632-IT-WL | 4 | 3.12 | 1.04 | 5.23 | 5 |

## Wet-location EMT compression couplings

| Cat. No. | Hub Size (in.) | Dimensions (in.) | | | Std. Ctn. |
|---|---|---|---|---|---|
| | | A | B | C | |
| CI5704-WL | ½ | 1.94 | 1.14 | – | 100 |
| CI5706-WL | ¾ | 2.09 | 1.38 | – | 50 |
| CI5708-WL | 1 | 2.31 | 1.67 | – | 25 |
| CI5710-WL | 1-¼ | 2.58 | 2.06 | – | 25 |
| CI5712-WL | 1-½ | 2.74 | 2.27 | – | 20 |
| CI5716-WL | 2 | 2.83 | 2.77 | – | 10 |
| CI5720-WL | 2-½ | 4.47 | 3.65 | – | 5 |
| CI5724-WL | 3 | 4.70 | 4.30 | – | 5 |
| CI5732-WL | 4 | 5.75 | 5.23 | – | 5 |

# EMT

## Accessories

CI1304 / CI1316



CI1404 / CI1416



CI1520 / CI1532



| Cat. No. | Trade Size (in.) | Max. EMT Dia. (in.) | Hole Size (in.) |
|---|---|---|---|
| **One Hole EMT Straps** (Galvanized Steel) | | | |
| CI1304 | 1/2 | 0.71 | 1/4 |
| CI1306 | 3/4 | 0.92 | 1/4 |
| CI1308 | 1 | 1.16 | 5/16 |
| CI1310 | 1-1/4 | 1.51 | 7/16 |
| CI1312 | 1-1/2 | 1.74 | 7/16 |
| CI1316 | 2 | 2.20 | 9/16 |
| **Two Hole EMT Straps** (Galvanized Steel) | | | |
| CI1404 | 1/2 | 0.71 | 3/16 |
| CI1406 | 3/4 | 0.92 | 3/16 |
| CI1408 | 1 | 1.16 | 3/16 |
| CI1410 | 1-1/4 | 1.51 | 1/4 |
| CI1412 | 1-1/2 | 1.74 | 1/4 |
| CI1416 | 2 | 2.20 | 3/8 |
| CI1520 | 2-1/2 | 2.88 | 3/8 |
| CI1524 | 3 | 3.50 | 3/8 |
| CI1528 | 3-1/2 | 4.00 | 1/2 |
| CI1532 | 4 | 4.50 | 1/2 |

CI5153



CI5154



| Cat. No. | Trade Size (in.) | | Clamping Range (in.) | |
|---|---|---|---|---|
| | EMT | Flex. | Min. | Max. |
| **EMT / Flex Couplings** (Zinc Alloy) | | | | |
| CI5153 | 1/2 | 3/8 | 0.17 | 0.63 |
| CI5154 | 1/2 | 1/2 | 0.75 | 0.95 |

CI7538



| Cat. No. | Max. Flex. Conduit Dia. (in.) | Hole Size (in.) |
|---|---|---|
| **One Hole Double Sided Strap** (Galvanized Steel) | | |
| CI7538* | 1.05 | 3/16 |

*Any combination of 3/8 in., 1/2 in. and 3/4 in. EMT, rigid conduit, flexible conduit or teck cables

# EMT

## Accessories

500-SC / 503-SC

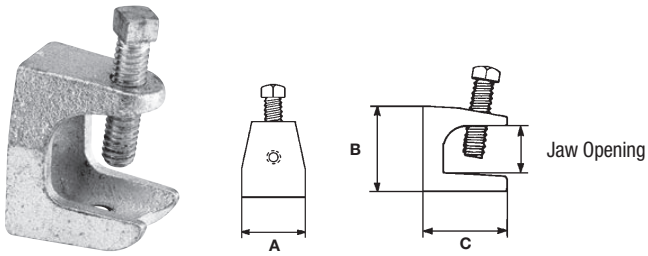


| Cat. No. | Trade Size (in.) | Jaw Opening (in.) | Tap Base and Back | Dimensions (in.) | | |
|---|---|---|---|---|---|---|
| | | | | A | B | C |
| **Beam Clamps** (Malleable Iron) | | | | | | |
| 500-SC | 1/4NC | 15/16 | 1/4-20 | 1 | 1-1/4 | 1-7/16 |
| 501 | 5/16NC | 7/8 | 5/16-18 | 1-9/16 | 1-9/16 | 1-11/16 |
| 502 | 3/8NC | 1 | 3/8-16 | 2 | 1-7/8 | 1-3/4 |
| 503-SC | 1/2NC | 1 | 1/2-13 | 2-1/2 | 2-3/8 | 2-3/8 |

CICH-0404 / CICH-3232



| Cat. No. | Trade Size (in.) | |
|---|---|---|
| | EMT | Rigid |
| **Conduit Hangers-Steel** (with nuts & bolts) | | |
| CICH-0404 | 1/2 | 1/2 |
| CICH-0606 | 3/4 | 3/4 |
| CICH-0808 | 1 | 1 |
| CICH-0010 | 1-1/4 | — |
| CICH-1012 | 1-1/2 | 1-1/4 |
| CICH-1200 | — | 1-1/2 |
| CICH-1616 | 2 | 2 |
| CICH-2020 | 2-1/2 | 2-1/2 |
| CICH-2424 | 3 | 3 |
| CICH-2828 | 3-1/2 | 3-1/2 |
| CICH-3232 * | 4 | 4 |

* Not CSA certified

# EMT

## Pull Elbows and Conduit Fittings

CI5204 / CI5206



Zinc Die Cast Locknut

CI5304 / CI5306 / CI5308-G / CI5310-G



-G: with gasket.

CICA-1/2 / CICA-2



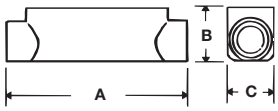


CILBA-1/2 / CILBA-2 / CILBSA-2-1/2 / CILBSA-4



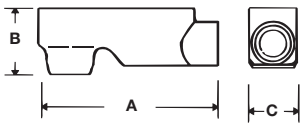


| Cat. No. | Trade Size (in.) | Dimensions (in.) | | |
|---|---|---|---|---|
| | | A | B | C |
| **Pull Elbows, EMT to Box** (Zinc Alloy) | | | | |
| CI5204 | 1/2 | 1-5/16 | 1-1/8 | — |
| CI5206 | 3/4 | 1-1/2 | 1-1/4 | — |
| **Pull Elbows, EMT to EMT** (Zinc Alloy) | | | | |
| CI5304 | 1/2 | 1-5/16 | 15/16 | — |
| CI5306 | 3/4 | 1-5/8 | 1-1/4 | — |
| CI5308-G | 1 | 1-15/16 | 1-5/8 | — |
| CI5310-G | 1-1/4 | 2-1/4 | 2 | — |
| **EMT Conduit Fittings - "C" Type** (Cast Aluminum) | | | | |
| CICA-1/2 | 1/2 | 4-7/8 | 1-3/8 | 1-3/8 |
| CICA-3/4 | 3/4 | 5-9/16 | 1-1/2 | 1-7/16 |
| CICA-1 | 1 | 6-1/2 | 1-3/4 | 1-3/4 |
| CICA-1-1/4 | 1-1/4 | 8-5/8 | 1-15/16 | 2-1/2 |
| CICA-1-1/2 | 1-1/2 | 8-5/8 | 2-11/16 | 2-1/2 |
| CICA-2 | 2 | 10-15/16 | 3 | 3-3/16 |
| **EMT Conduit Fittings - "LB" Type** (Cast Aluminum) | | | | |
| CILBA-1/2 | 1/2 | 4-5/16 | 1-1/2 | 1-3/8 |
| CILBA-3/4 | 3/4 | 4-15/16 | 1-7/8 | 1-9/16 |
| CILBA-1 | 1 | 6-1/16 | 2-1/16 | 1-13/16 |
| CILBA-1-1/4 | 1-1/4 | 7-7/8 | 2-15/16 | 2-1/2 |
| CILBA-1-1/2 | 1-1/2 | 7-7/8 | 3-1/16 | 2-1/2 |
| CILBA-2 | 2 | 10 | 3-3/4 | 3-3/16 |
| CILBSA-2-1/2 * | 2-1/2 | 13 | 7-3/8 | 4-1/4 |
| CILBSA-3 * | 3 | 13 | 7-3/8 | 4-1/4 |
| CILBSA-3-1/2 * | 3-1/2 | 15-1/4 | 9 | 5-1/4 |
| CILBSA-4 * | 4 | 15-1/4 | 9 | 5-1/4 |

Covers and gaskets are included with all aluminum conduit fittings
Types CICA and CILBA are also suitable for use with rigid conduit (NPSM threads)
* For EMT only, not threaded

# EMT

## Conduit Fittings, Accessories and Entrance Heads

CILRL-1/2 / CILRL-2



Combined LL/LR
Left and right
application

CITA-1/2 / CITA-2



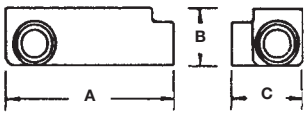


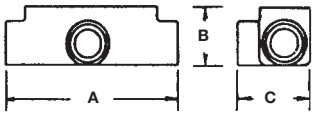


| Cat. No. | Trade Size (in.) | Dimensions (in.) | | |
|---|---|---|---|---|
| | | A | B | C |
| **EMT Conduit Fittings - "LRL" Type** (Cast Aluminum) | | | | |
| CILRL-1/2 | 1/2 | 4-7/16 | 1-11/16 | 2-1/8 |
| CILRL-3/4 | 3/4 | 5-3/16 | 1-7/8 | 2-1/4 |
| CILRL-1 | 1 | 6 | 2-3/16 | 2-1/2 |
| CILRL-1-1/4 | 1-1/4 | 7-15/16 | 2-3/4 | 3-1/2 |
| CILRL-1-1/2 | 1-1/2 | 7-15/16 | 3-1/4 | 3-1/2 |
| CILRL-2 | 2 | 10-3/16 | 3-11/16 | 4-1/8 |
| **EMT Conduit Fittings - "T" Type** (Cast Aluminum) | | | | |
| CITA-1/2 | 1/2 | 4-7/8 | 1-3/8 | 2-1/16 |
| CITA-3/4 | 3/4 | 5-9/16 | 1-3/4 | 2-1/8 |
| CITA-1 | 1 | 6-1/2 | 2 | 2-1/2 |
| CITA-1-1/4 | 1-1/4 | 8-11/16 | 2-5/8 | 3-1/2 |
| CITA-1-1/2 | 1-1/2 | 8-11/16 | 3 | 3-9/16 |
| CITA-2 | 2 | 10-7/8 | 3-1/4 | 4-3/16 |

Covers and gaskets are included with all aluminum conduit fittings
Types CILRL and CITA are also suitable for use with rigid conduit (NPSM Threads)

CIBC-1/2 / CIBC-2



| Cat. No. | Gros. nom. (in.) |
|---|---|
| **Blank Covers for Aluminum Conduit Fittings** (Stamped Aluminum) | |
| CIBC-1/2 | 1/2 |
| CIBC-3/4 | 3/4 |
| CIBC-1 | 1 |
| CIBC-1-1/4 | 1-1/4 |
| CIBC-2 | 2 |

For 1-1/2, use CIBC-1-1/4
Screws not included

CIG-1/2 / CIG-2



| Cat. No. | Trade Size (in.) |
|---|---|
| **Gaskets for Aluminum Conduit Fittings** (Neoprene) | |
| CIG-1/2 | 1/2 |
| CIG-3/4 | 3/4 |
| CIG-1 | 1 |
| CIG-1-1/4 | 1-1/4 |
| CIG-2 | 2 |

For 1-1/2, use CIG-1-1/4

CIEFSA-1/2 / CIEFSA-4



| Cat. No. | Trade Size (in.) |
|---|---|
| **Service Entrance Heads** (Cast Aluminum) | |
| CIEFSA-1/2 | 1/2 |
| CIEFSA-3/4 | 3/4 |
| CIEFSA-1 | 1 |
| CIEFSA-1 1/4 | 1-1/4 |
| CIEFSA-1 1/2 | 1-1/2 |
| CIEFSA-2 | 2 |
| CIEFSA-2 1/2 | 2-1/2 |
| CIEFSA-3 | 3 |
| CIEFSA-3 1/2 | 3-1/2 |
| CIEFSA-4 | 4 |

Consult page D10 for technical specifications

FT-10.1

# 8241 SPECIFICATIONS

## Building Automation & Control

Non-Plenum (FT4)

APPLICATION

Building Automation - HVAC
Régulation

| CONDUCTORS | |
|---|---|
| Material | Tinned copper |
| Size | 22 AWG |
| Stranding | 7 x 0.010" |
| Configuration | Triad |
| No. of triads | 1 |
| Color code | A (see chart) |

| INSULATION | |
|---|---|
| Material | Semi-Rigid PVC |
| Temperature | 105 °C |
| Insulation thickness | 0.01 mm |
| Voltage | 600 Volts |

| SHIELD | |
|---|---|
| Type | Foil |
| Material | Aluminum/Mylar |
| Thickness | 0.025 mm |
| Apply to | Triad |

| DRAIN WIRE | |
|---|---|
| Material | Tinned Copper |
| Size | 24 awg |
| Construction | 7 x 32 awg |

| OUTER JACKET | |
|---|---|
| Material | PVC |
| Jacket thickness | 0.167 mm |
| Color | Orange |
| Rip cord | Apply |
| Diameter | 4.24 mm |

| OPTIONS | |
|---|---|
| CSA/UL approbation | FT4 |
| Quality insurance | ISO 9002 |
| ROHS | Yes |

| CHARACTERISTICS | |
|---|---|
| Outer diameter | 0.15 mm |
| Bending radius | 50.8 mm |
| Weight | 29.7 kgs/km |
| Capacitance A* | 40.2 pF/ft |
| Capacitance B** | 72.9 pF/ft |
| Impedance | 60 Ohms |
| Conductor resistance at 20°C | 16.6 Ohms/1000 |

The values shown are nominal.
* Capacitance between conductors
** Capacitance between one conductor and other conductors connected to shield
last revision: 2015-08-19 18:13:06.

FT-10.2

# 8242 SPECIFICATIONS

## Building Automation & Control

Non-Plenum (FT4)

APPLICATION

Building Automation - HVAC
Régulation

| CONDUCTORS | |
|---|---|
| Material | Tinned copper |
| Size | 22 AWG |
| Stranding | 7 x 0.010" |
| Cabling lay | 9 T.P.F. |
| Configuration | Conductors |
| Conductor(s) | 4 |
| Color code | 1 (see chart) |

| INSULATION | |
|---|---|
| Material | Semi-rigid PVC |
| Temperature | 105 °C |
| Insulation thickness | 0.25 mm |
| Voltage | 600 Volts |

| SHIELD | |
|---|---|
| Type | Foil |
| Material | Aluminum/Mylar |
| Thickness | 0.038 mm |
| Apply to | Conductors |

| DRAIN WIRE | |
|---|---|
| Material | Tinned Copper |
| Size | 24 awg |
| Construction | 7 x 32 awg |

| OUTER JACKET | |
|---|---|
| Material | PVC |
| Jacket thickness | 0.38 mm |
| Color | Orange |
| Rip cord | Apply |
| Diameter | 5.23 mm |
| Temperature | 105 °C |

| OPTIONS | |
|---|---|
| CSA/UL approbation | FT4 |
| Quality insurance | ISO 9002 |
| ROHS | Yes |

| CHARACTERISTICS | |
|---|---|
| Outer diameter | 4.14 mm |
| Bending radius | 50.8 mm |
| Weight | 26.47 kgs/km |
| Capacitance A* | 36 pF/ft |
| Capacitance B** | 65 pF/ft |
| Impedance | 60 ohms |
| Conductor resistance at 20°C | 15.7 ohms/1000 ft |

The values shown are nominal.
* Capacitance between conductors
** Capacitance between one conductor and other conductors connected to shield
last revision: 2015-08-19 18:13:06.

FT-10.3

# 8220 SPECIFICATIONS

## Building Automation & Control

Non-Plenum (FT4)

APPLICATION

Contrôle de bâtiment - (HVAC)
Régulation

| CONDUCTORS | |
|---|---|
| Material | Bare Copper |
| Size | 20 AWG |
| Stranding | 7 x 0.0126" |
| Cabling lay | 6.67 T.P.F. |
| Configuration | Pair |
| Pair(s) | 1 |
| Color code | A (see chart) |

| INSULATION | |
|---|---|
| Material | Semi-Rigid PVC |
| Temperature | 105 °C |
| Insulation thickness | 0.25 mm |
| Voltage | 600 Volts |
| Attenuation | |

| OUTER JACKET | |
|---|---|
| Material | PVC |
| Jacket thickness | 0.38 mm |
| Color | Orange |
| Rip cord | Apply |
| Diameter | 3.94 mm |
| Temperature | 105 °C |

| OPTIONS | |
|---|---|
| Quality insurance | ISO 9002 |
| ROHS | Yes |

| CHARACTERISTICS | |
|---|---|
| Bending radius | 50.8 mm |
| Weight | 19 kgs/km |
| Capacitance A* | 30 pF/pi |
| Impedance | 64 Ohms |
| Conductor resistance at 20°C | 9.33 Ohms/1000' |

The values shown are nominal.
* Capacitance between conductors
** Capacitance between one conductor and other conductors connected to shield
last revision: 2016-03-19 17:50:35.

FT-10.4

# 8221 SPECIFICATIONS

## Building Automation & Control

Non-Plenum (FT4)

APPLICATION

Building Automation - HVAC
Régulation

| CONDUCTORS | |
|---|---|
| Material | Bare Copper |
| Size | 20 AWG |
| Stranding | 7 x 0.0126" |
| Cabling lay | 6.67 T.P.F. |
| Configuration | Triad |
| No. of triads | 1 |
| Color code | A (see chart) |

| INSULATION | |
|---|---|
| Material | Semi-rigid PVC |
| Temperature | 105 °C |
| Insulation thickness | 0.25 mm |
| Voltage | 600 Volts |

| OUTER JACKET | |
|---|---|
| Material | PVC |
| Jacket thickness | 0.38 mm |
| Color | Orange |
| Rip cord | Apply |
| Diameter | 4.04 mm |
| Temperature | 105 °C |

| OPTIONS | |
|---|---|
| Quality insurance | ISO 9002 |
| ROHS | Yes |

| CHARACTERISTICS | |
|---|---|
| Bending radius | 50.8 mm |
| Weight | 21 kgs/km |
| Capacitance A* | 30 pF/ft |
| Impedance | 64 Ohms |
| Conductor resistance at 20°C | 9.33 Ohms/1000 ft |

The values shown are nominal.
* Capacitance between conductors
** Capacitance between one conductor and other conductors connected to shield
last revision: 2015-08-19 18:13:06.

FT-10

# 8190 SPECIFICATIONS

## Building Automation & Control

Non-Plenum (FT4)

APPLICATION

Building Automation - HVAC
Régulation

| CONDUCTORS | |
|---|---|
| Material | Bare Copper |
| Size | 16 AWG |
| Stranding | 7 x 0.0192" |
| Cabling lay | 3.71 TPF |
| Configuration | Pair |
| Pair(s) | 1 |
| Color code | A (see chart) |

| INSULATION | |
|---|---|
| Material | Semi-Rigid PVC |
| Temperature | 105 °C |
| Insulation thickness | 0.508 mm |
| Voltage | 600 Volts |

| OUTER JACKET | |
|---|---|
| Material | PVC |
| Jacket thickness | 0.58 mm |
| Color | Orange |
| Rip cord | Apply |
| Diameter | 5.99 mm |
| Temperature | 105 °C |

| OPTIONS | |
|---|---|
| CSA/UL approbation | FT4 |
| Quality insurance | ISO 9002 |
| ROHS | Yes |

| CHARACTERISTICS | |
|---|---|
| Bending radius | 50.8 mm |
| Weight | 54 kgs/km |
| Capacitance A* | 30 pF/ft |
| Impedance | 64 Ohms |
| Conductor resistance at 20°C | 4.19 Ohms/1000 foot |

The values shown are nominal.
* Capacitance between conductors
** Capacitance between one conductor and other conductors connected to shield
last revision: 2016-04-12 10:44:06.

# Electrical Metallic Tubing (EMT) and True Color™ EMT

Columbia-MBF™
A PART OF atkore INTERNATIONAL

## E-Z Pull™ EMT

- Hot galvanized steel using patented inline Flo-Coat® process for long lasting exterior protection
- E-Z Pull interior coating provides a smooth raceway for fast, easier wire-pulling
- Excellent mechanical protection for conductors
- Ductility for faster and easier bending
- Optimal EMI shielding characteristics
- Listed to Underwriters Laboratories Safety Standard UL 797
- Manufactured in accordance with ANSI C80.3
- Available in sizes 1/2 (16) - 4 (103)

## Quality Electrical Metallic Tubing

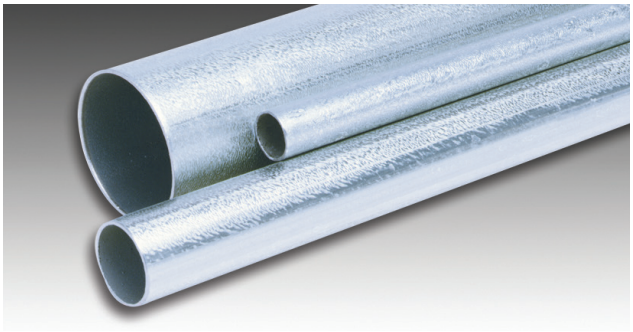

## True Color™ EMT

- All the benefits of E-Z Pull EMT
- Instant identification of multiple circuits
- Fire Alarm® Red EMT
- Healthcare Green EMT
- Data Com Blue EMT
- Available in 8 colors
- Available in sizes 1/2 (16) - 4 (103)

## Identify Important Circuits Instantly!



## True Color™ Applications

**Black EMT**
- Blends in dark colored areas

**Fire Alarm® EMT**
- Emergency circuits
- Fire alarm and Security systems

**Orange EMT**
- Construction/research areas
- Fiber optic systems
- Auto repair/maintenance

**Yellow EMT**
- High voltage wiring
- Caution areas
- Special equipment

**Green EMT**
- Hospital and healthcare areas
- Nurse call stations
- Critical circuits

**Blue EMT**
- Low voltage wiring
- Data com/video
- Network security

**Purple EMT**
- Specialty wiring systems
- Security systems

**White EMT**
- Blends in light colored areas

**Silver EMT**
- Standard Use
- Contemporary architecture








### Project Information

Company Name: _____
Address: _____
City: _____
State & Zip: _____
Phone: _____
Project Name: _____
City: _____
State: _____

NOTE: Special orders are non-cancelable, non-returnable and non-refundable

# Electrical Metallic Tubing (EMT) and True Color™ EMT

Columbia-MBF™
A PART OF atkore INTERNATIONAL

## FEATURES & SPECIFICATIONS

### Manufactured for Long Life

Columbia-MBF® EMT is precision manufactured from high grade mild strip steel for exceptional durability and long-lasting life. Columbia-MBF EMT is hot galvanized using a patented inline Flo-Coat™ process. This process combines zinc, a conversion coating, and a clear organic polymer topcoat to form a triple layer of protection against corrosion and abrasion.

E-Z Pull™ EMT combines strength with ductility, providing easy bending, cutting and joining while resisting flattening, kinking and splitting. Available in sizes 1/2 (16) - 4 (103).

### Coatings

Columbia-MBF's EMT (Electrical Metallic Tubing) has a special low friction ID coating called E-Z Pull that greatly improves the slip properties between conduit and wire. With E-Z Pull EMT, wire pulls through the EMT smoothly and easily, making installation easier and faster.

### EMI Shielding

Columbia-MBF EMT is very effective in reducing electromagnetic field levels for encased power distribution circuits, shielding computers and other sensitive electronic equipment from the effects of electromagnetic interference.

For more information on EMT shielding, visit www.columbia-mbf.ca to obtain the **GEMI** (**G**rounding and **E**lectro-**M**agnetic **I**nterference) software analysis program.

### Codes & Standards Compliance

Columbia-MBF EMT is Certified to Canadian Standards Association C22.2 No.83.1. As a metal raceway, EMT functions as an equipment bonding conductor when installed in compliance with the Canadian Electrical Code (CEC), including Section 10 *Grounding and Bonding* and Section 12-1400 *Electrical Metallic Tubing*. Documentation is available in the GEMI (Grounding and Electro-Magnetic Interference) analysis software and related research studies found at the www.columbia-mbf.ca website.

Installation of EMT shall be in accordance with the Canadian Electrical Code and the CSA Certification information.

### Specification Data

To specify Columbia-MBF EMT, include the following: Electrical Metallic Tubing shall be equal to that manufactured by Columbia-MBF Inc. EMT shall be hot galvanized steel O.D. with an organic corrosion resistant I.D. coating, and shall be CSA Certified to Standard C22.2 No. 83.1 and manufactured in accordance with ANSI C80.3.

### Electrical Metallic Tubing (EMT) and True Color™ EMT

Certified to Canadian Standards Association Safety Standard CSA C22.2 No.83.1
Manufactured in accordance with ANSI C80.3

| Trade Size | Metric Designator | Outside Diameter[1] | | Nominal Wall Thickness[2] | | Approximate Weight Per 100 Ft. (30.5M) | | Standard Bundle Quantity | | True Color** Bundle Qty. | |
|---|---|---|---|---|---|---|---|---|---|---|---|
| | | in | mm | in | mm | lb | kg | ft | m | ft | m |
| 1/2 | 16 | 0.706 | 17.93 | 0.042 | 1.07 | 30 | 13.6 | 2500 | 762.0 | 3500 | 1066.8 |
| 3/4 | 21 | 0.922 | 23.42 | 0.049 | 1.24 | 46 | 20.9 | 2000 | 609.6 | 2500 | 762.0 |
| 1 | 27 | 1.163 | 29.54 | 0.057 | 1.45 | 67 | 30.4 | 1000 | 304.8 | 1500* | 457.2 |
| 1-1/4 | 35 | 1.510 | 38.35 | 0.065 | 1.65 | 101 | 45.8 | 500 | 152.4 | 2000 | 609.6 |
| 1-1/2 | 41 | 1.740 | 44.20 | 0.065 | 1.65 | 116 | 52.6 | 500 | 152.4 | 1500 | 457.2 |
| 2 | 53 | 2.197 | 55.80 | 0.065 | 1.65 | 148 | 67.1 | 510 | 155.4 | 1200 | 365.7 |
| 2-1/2 | 63 | 2.875 | 73.03 | 0.072 | 1.83 | 216 | 98.0 | 250 | 76.2 | 610 | 185.9 |
| 3 | 78 | 3.500 | 88.90 | 0.072 | 1.83 | 263 | 119.3 | 200 | 61.0 | 510 | 155.4 |
| 3-1/2 | 91 | 4.000 | 101.60 | 0.083 | 2.11 | 349 | 158.3 | 100 | 30.5 | 370 | 112.7 |
| 4 | 103 | 4.500 | 114.30 | 0.083 | 2.11 | 393 | 178.3 | 100 | 30.5 | 300 | 91.5 |

1.2

[1]Outside diameter tolerances: +/- .005 in. (.13mm) for size 1/2 (16mm) through 2 (53mm);
+/- .010 in. (.25mm) for size 2-1/2 (63);
+/- .015 in. (.38mm) for size 3 (78);
+/- .020 in. (.50mm) for size 3-1/2 (91) and 4 (103).
NOTE: Length = 10 ft. (3.05m) with a tolerance of +/- .25 in. (6mm)
[2]For information only. Not a requirement of the CSA standard.

*True Color Blue size 1 (27) bundle quantity: 3000 ft / (914.4m)
** True Color Size 2 (53)- 4 (103) are available through special order

NOTE: Special orders are non-cancelable, non-returnable and non-refundable

6560 Northwest Drive, Mississauga, Ontario L4V 1P2
Phone / 905.362.0180 • Toll-Free / 866.632.0180
www.columbia-mbf.ca

# Electrical Metallic Tubing (EMT) Elbows

Columbia-MBF™
A PART OF atkore INTERNATIONAL

## EMT 90° Elbows

Certified to Canadian Standards Association Safety Standard CSA C22.2 No.83.1
Manufactured in accordance with ANSI C80.3

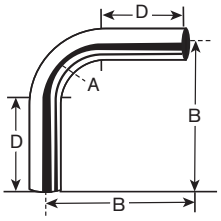


| Trade Size | Metric Designator | Radius (A)[1] | | Offset (B)[2] | | Straight (D)[1] | | Approximate Weight Per 100 Pieces | | Standard Package |
|---|---|---|---|---|---|---|---|---|---|---|
| | | in | mm | in | mm | in | mm | lb | kg | |
| 1/2 | 16 | 4 | 102 | 5 7/8 | 149 | 1 1/2 | 38 | 25 | 11.3 | 25 |
| 3/4 | 21 | 4 1/2 | 114 | 7 | 178 | 1 1/2 | 38 | 46 | 20.9 | 50 |
| 1 | 27 | 5 3/4 | 146 | 8 3/4 | 222 | 1 7/8 | 48 | 84 | 38.1 | 25 |
| 1 1/4 | 35 | 7 1/4 | 184 | 10 1/8 | 257 | 2 | 51 | 144 | 65.3 | 20 |
| 1 1/2 | 41 | 8 1/4 | 210 | 11 3/4 | 298 | 2 | 51 | 193 | 87.5 | 15 |
| 2 | 53 | 9 1/2 | 241 | 14 | 356 | 2 | 51 | 296 | 134.3 | 10 |
| 2 1/2 | 63 | 10 1/2 | 267 | 16 1/4 | 413 | 3 | 76 | 504 | 228.6 | 80 |
| 3 | 78 | 13 | 330 | 18 3/4 | 476 | 3 1/8 | 79 | 701 | 318.0 | 50 |
| 3 1/2 | 91 | 15 | 381 | 21 1/4 | 540 | 3 1/4 | 83 | 1047 | 474.9 | 50 |
| 4 | 103 | 16 | 406 | 23 3/8 | 594 | 3 3/8 | 86 | 1310 | 594.2 | 36 |

[1]Minimum requirement as per CSA Standard
[2]For information only, not a requirement as per CSA Standard
Sizes 2-1/2 (63) and larger shipped in palletized cartons or bulk.
Also available in the following Degrees (60°, 45°, 30°, 22-1/2°, 15° & 11-1/4°)

## EMT 45° Elbows

Certified to Canadian Standards Association Safety Standard CSA C22.2 No.83.1
Manufactured in accordance with ANSI C80.3

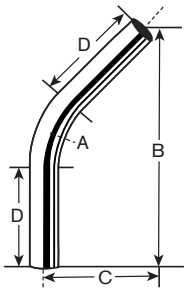


| Trade Size | Metric Designator | Radius (A)[1] | | Offset (B)[2] | | Offset (C)[2] | | Straight (D)[1] | | Approximate Weight Per 100 Pieces | | Standard Package |
|---|---|---|---|---|---|---|---|---|---|---|---|---|
| | | in | mm | in | mm | in | mm | in | mm | lb | kg | |
| 1/2 | 16 | 4 | 102 | 6 1/8 | 156 | 2 1/2 | 64 | 1 1/2 | 38 | 18 | 8.2 | 25 |
| 3/4 | 21 | 4 1/2 | 114 | 7 3/8 | 187 | 3 1/8 | 79 | 1 1/2 | 38 | 33 | 15.0 | 50 |
| 1 | 27 | 5 3/4 | 146 | 8 3/4 | 222 | 3 5/8 | 92 | 1 7/8 | 48 | 56 | 25.4 | 25 |
| 1 1/4 | 35 | 7 1/4 | 184 | 10 1/8 | 257 | 4 1/8 | 105 | 2 | 51 | 97 | 44.0 | 20 |
| 1 1/2 | 41 | 8 1/4 | 210 | 13 1/8 | 333 | 5 3/8 | 137 | 2 | 51 | 145 | 65.8 | 15 |
| 2 | 53 | 9 1/2 | 241 | 13 1/8 | 333 | 5 1/2 | 140 | 2 | 51 | 185 | 83.9 | 10 |
| 2 1/2 | 63 | 10 1/2 | 267 | 17 1/2 | 445 | 7 1/4 | 184 | 3 | 76 | 360 | 163.3 | 80 |
| 3 | 78 | 13 | 330 | 17 1/2 | 445 | 7 1/4 | 184 | 3 1/8 | 79 | 438 | 198.7 | 50 |
| 3 1/2 | 91 | 15 | 381 | 26 1/8 | 664 | 10 7/8 | 276 | 3 1/4 | 83 | 873 | 396.0 | 50 |
| 4 | 103 | 16 | 406 | 26 1/4 | 667 | 10 7/8 | 276 | 3 3/8 | 86 | 983 | 445.9 | 36 |

[1]Minimum requirement as per CSA Standard
[2]For information only, not a requirement as per CSA Standard
Sizes 2-1/2 (63) and larger shipped in palletized cartons or bulk.
Also available in the following Degrees (90°, 60°, 30°, 22-1/2°, 15° & 11-1/4°)

NOTE: Special orders are non-cancelable, non-returnable and non-refundable

6560 Northwest Drive, Mississauga, Ontario L4V 1P2
**Phone /** 905.362.0180 • **Toll-Free /** 866.632.0180
**www.columbia-mbf.ca**

# Electrical Metallic Tubing (EMT) Elbows

Columbia-MBF™
A PART OF atkore INTERNATIONAL

## EMT Large Radius 90° Elbows

Certified to Canadian Standards Association Safety Standard CSA C22.2 No.83.1
Manufactured in accordance with ANSI C80.3

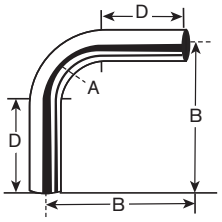


| Trade Size | Metric Designator | Radius (A) | | Offset (B)[2] | | Straight (D)[2] | | Approximate Weight Per 100 Pieces | |
|---|---|---|---|---|---|---|---|---|---|
| | | in | mm | in | mm | in | mm | lb | kg |
| 1 | 27 | 12 | 305 | 20 5/8 | 524 | 8 5/8 | 219 | 201 | 91.2 |
| 1 | 27 | 15 | 381 | 24 1/4 | 616 | 9 1/4 | 235 | 235 | 106.6 |
| 1 | 27 | 18 | 457 | 27 7/8 | 708 | 9 7/8 | 251 | 268 | 121.6 |
| 1 | 27 | 24 | 610 | 34 5/8 | 879 | 10 5/8 | 270 | 329 | 149.2 |
| 1 | 27 | 30 | 762 | 41 | 1041 | 11 | 279 | 385 | 174.6 |
| 1 | 27 | 36 | 914 | 46 3/4 | 1187 | 10 3/4 | 273 | 436 | 197.8 |
| 1 | 27 | 42 | 1067 | 54 | 1372 | 12 | 305 | 503 | 228.2 |
| 1 | 27 | 48 | 1219 | 60 1/4 | 1530 | 12 1/4 | 311 | 558 | 253.1 |
| 1 1/4 | 35 | 12 | 305 | 20 5/8 | 524 | 8 5/8 | 219 | 303 | 137.4 |
| 1 1/4 | 35 | 15 | 381 | 24 1/4 | 616 | 9 1/4 | 235 | 354 | 160.6 |
| 1 1/4 | 35 | 18 | 457 | 27 7/8 | 708 | 9 7/8 | 251 | 404 | 183.3 |
| 1 1/4 | 35 | 24 | 610 | 34 5/8 | 879 | 10 5/8 | 270 | 497 | 225.4 |
| 1 1/4 | 35 | 30 | 762 | 41 | 1041 | 11 | 279 | 581 | 263.5 |
| 1 1/4 | 35 | 36 | 914 | 46 3/4 | 1187 | 10 3/4 | 273 | 657 | 298.0 |
| 1 1/4 | 35 | 42 | 1067 | 54 | 1372 | 12 | 305 | 758 | 343.8 |
| 1 1/4 | 35 | 48 | 1219 | 60 1/4 | 1530 | 12 1/4 | 311 | 842 | 381.9 |
| 1 1/2 | 41 | 12 | 305 | 20 5/8 | 524 | 8 5/8 | 219 | 348 | 157.9 |
| 1 1/2 | 41 | 15 | 381 | 24 1/4 | 616 | 9 1/4 | 235 | 406 | 184.2 |
| 1 1/2 | 41 | 18 | 457 | 27 7/8 | 708 | 9 7/8 | 251 | 464 | 210.5 |
| 1 1/2 | 41 | 24 | 610 | 34 5/8 | 879 | 10 5/8 | 270 | 570 | 258.6 |
| 1 1/2 | 41 | 30 | 762 | 41 | 1041 | 11 | 279 | 667 | 302.6 |
| 1 1/2 | 41 | 36 | 914 | 46 3/4 | 1187 | 10 3/4 | 273 | 754 | 342.0 |
| 1 1/2 | 41 | 42 | 1067 | 54 | 1372 | 12 | 305 | 870 | 394.6 |
| 1 1/2 | 41 | 48 | 1219 | 60 1/4 | 1530 | 12 1/4 | 311 | 967 | 438.6 |
| 2 | 53 | 12 | 305 | 20 5/8 | 524 | 8 5/8 | 219 | 444 | 201.4 |
| 2 | 53 | 15 | 381 | 24 1/4 | 616 | 9 1/4 | 235 | 518 | 235.0 |
| 2 | 53 | 18 | 457 | 27 7/8 | 708 | 9 7/8 | 251 | 592 | 268.5 |
| 2 | 53 | 24 | 610 | 34 5/8 | 879 | 10 5/8 | 270 | 728 | 330.2 |
| 2 | 53 | 30 | 762 | 41 | 1041 | 11 | 279 | 851 | 386.0 |
| 2 | 53 | 36 | 914 | 46 3/4 | 1187 | 10 3/4 | 273 | 962 | 436.4 |
| 2 | 53 | 42 | 1067 | 54 | 1372 | 12 | 305 | 1110 | 503.5 |
| 2 | 53 | 48 | 1219 | 60 1/4 | 1530 | 12 1/4 | 311 | 1233 | 559.3 |
| 2 1/2 | 63 | 12 | 305 | 20 5/8 | 524 | 8 5/8 | 219 | 648 | 293.9 |
| 2 1/2 | 63 | 15 | 381 | 24 1/4 | 616 | 9 1/4 | 235 | 756 | 342.9 |
| 2 1/2 | 63 | 18 | 457 | 27 7/8 | 708 | 9 7/8 | 251 | 864 | 391.9 |
| 2 1/2 | 63 | 24 | 610 | 34 5/8 | 879 | 10 5/8 | 270 | 1062 | 481.7 |
| 2 1/2 | 63 | 30 | 762 | 41 | 1041 | 11 | 279 | 1242 | 563.4 |
| 2 1/2 | 63 | 36 | 914 | 46 3/4 | 1187 | 10 3/4 | 273 | 1404 | 636.9 |
| 2 1/2 | 63 | 42 | 1067 | 54 | 1372 | 12 | 305 | 1620 | 734.8 |
| 2 1/2 | 63 | 48 | 1219 | 60 1/4 | 1530 | 12 1/4 | 311 | 1800 | 816.5 |

[2]For information only, not a requirement as per CSA Standard

Chart continued on the next page

Sizes 2-1/2 (63) and larger shipped in palletized cartons or bulk.
Also available in the following Degrees (60°, 45°, 30°, 22-1/2°, 15° & 11-1/4°)

NOTE: Special orders are non-cancelable, non-returnable and non-refundable

6560 Northwest Drive, Mississauga, Ontario L4V 1P2
Phone / 905.362.0180 • Toll-Free / 866.632.0180
www.columbia-mbf.ca

# Electrical Metallic Tubing (EMT) Elbows

Columbia-MBF™
A PART OF atkore INTERNATIONAL

## EMT Large Radius 90° Elbows (continued)

Certified to Canadian Standards Association Safety Standard CSA C22.2 No.83.1
Manufactured in accordance with ANSI C80.3

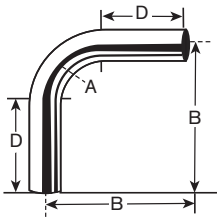


| Trade Size | Metric Designator | Radius (A) | | Offset (B)[2] | | Straight (D) [2] | | Approximate Weight Per 100 Pieces | |
|---|---|---|---|---|---|---|---|---|---|
| | | in | mm | in | mm | in | mm | lb | kg |
| 3 | 78 | 15 | 381 | 24 1/4 | 616 | 9 1/4 | 235 | 921 | 417.8 |
| 3 | 78 | 18 | 457 | 27 7/8 | 708 | 9 7/8 | 251 | 1052 | 477.2 |
| 3 | 78 | 24 | 610 | 34 5/8 | 879 | 10 5/8 | 270 | 1293 | 586.5 |
| 3 | 78 | 30 | 762 | 41 | 1041 | 11 | 279 | 1512 | 685.8 |
| 3 | 78 | 36 | 914 | 46 3/4 | 1187 | 10 3/4 | 273 | 1710 | 775.7 |
| 3 | 78 | 42 | 1067 | 54 | 1372 | 12 | 305 | 1973 | 895.0 |
| 3 | 78 | 48 | 1219 | 60 1/4 | 1530 | 12 1/4 | 311 | 2192 | 994.3 |
| 3 1/2 | 91 | 18 | 457 | 27 7/8 | 708 | 9 7/8 | 251 | 1396 | 633.2 |
| 3 1/2 | 91 | 24 | 610 | 34 5/8 | 879 | 10 5/8 | 270 | 1716 | 778.4 |
| 3 1/2 | 91 | 30 | 762 | 41 | 1041 | 11 | 279 | 2007 | 910.4 |
| 3 1/2 | 91 | 36 | 914 | 46 3/4 | 1187 | 10 3/4 | 273 | 2269 | 1029.2 |
| 3 1/2 | 91 | 42 | 1067 | 54 | 1372 | 12 | 305 | 2618 | 1187.5 |
| 3 1/2 | 91 | 48 | 1219 | 60 1/4 | 1530 | 12 1/4 | 311 | 2908 | 1319.1 |
| 4 | 103 | 18 | 457 | 27 7/8 | 708 | 9 7/8 | 251 | 1572 | 713.1 |
| 4 | 103 | 24 | 610 | 34 5/8 | 879 | 10 5/8 | 270 | 1932 | 876.4 |
| 4 | 103 | 30 | 762 | 41 | 1041 | 11 | 279 | 2260 | 1025.1 |
| 4 | 103 | 36 | 914 | 46 3/4 | 1187 | 10 3/4 | 273 | 2555 | 1158.9 |
| 4 | 103 | 42 | 1067 | 54 | 1372 | 12 | 305 | 2948 | 1337.2 |
| 4 | 103 | 48 | 1219 | 60 1/4 | 1530 | 12 1/4 | 311 | 3275 | 1485.5 |

[2]For information only, not a requirement as per CSA Standard
Sizes 2-1/2 (63) and larger shipped in palletized cartons or bulk.
Also available in the following Degrees (60°, 45°, 30°, 22-1/2°, 15° & 11-1/4°)

NOTE: Special orders are non-cancelable, non-returnable and non-refundable

6560 Northwest Drive, Mississauga, Ontario L4V 1P2
Phone / 905.362.0180 • Toll-Free / 866.632.0180
www.columbia-mbf.ca

# EMT

## Set Screw Fittings

CI5404 (-IT) / CI5408 (-IT)



CI5410 (-IT) / CI5432 (-IT)



c UL us LISTED

| Cat. No. | | Trade Size (in.) |
|---|---|---|
| Regular | Insulated | |
| **EMT Set Screw Fittings** (Steel) | | |
| CI5404 | CI5404-IT | 1/2 |
| CI5406 | CI5406-IT | 3/4 |
| CI5408 | CI5408-IT | 1 |
| CI5410 | CI5410-IT | 1-1/4 |
| CI5412 | CI5412-IT | 1-1/2 |
| CI5416 | CI5416-IT | 2 |
| CI5420 | CI5420-IT | 2-1/2 |
| CI5424 | CI5424-IT | 3 |
| CI5432 | CI5432-IT | 4 |

Concrete-tight

1.3

CI5004 (-IT) / CI5008 (-IT)



CI5010 (-IT) / CI5016 (-IT)



CI5020 (-IT) / CI5032 (-IT)



| Cat. No. | | Trade Size (in.) |
|---|---|---|
| Regular (Zinc) | Insulated (Steel) | |
| **EMT Set Screw Fittings** (Zinc) | | |
| CI5004 | CI5004-IT | 1/2 |
| CI5006 | CI5006-IT | 3/4 |
| CI5008 | CI5008-IT | 1 |
| CI5010 | CI5010-IT | 1-1/4 |
| CI5012 | CI5012-IT | 1-1/2 |
| CI5016 | CI5016-IT | 2 |
| CI5020 | CI5020-IT | 2-1/2 |
| CI5024 | CI5024-IT | 3 |
| CI5032 | CI5032-IT | 4 |

Concrete-tight. Zinc Die Cast Locknut. IT: with insulated throat.

CI5054 / CI5058



| Cat. No. | Trade Size (in.) | Offset (in.) |
|---|---|---|
| **EMT Set Screw Offset Body Fittings** (Zinc Alloy) | | |
| CI5054 | 1/2 | 3/8 |
| CI5056 | 3/4 | 3/4 |
| CI5058 | 1 | 3/4 |

Concrete-tight.

TC121A-FA






| Cat. No. | | Trade Size (in.) | Std. Pkg. Qty |
|---|---|---|---|
| Regular | Insulated | | |
| **EMT / Fire Alarm Set Screw Fittings** (Red Steel) | | | |
| TC121A-FA | TC721A-FA | 1/2 | 50 |
| TC122A-FA | TC722A-FA | 3/4 | 50 |
| TC123A-FA | TC723A-FA | 1 | 25 |

# EMT

## Set Screw Couplings

CI5504 / CI5508



CI5120 / CI5132



CI5104 / CI5116



CI5510 / CI5532



| Cat. No. | | Trade Size (in.) |
|---|---|---|
| Steel | Zinc Alloy | |
| **EMT Set Screw Couplings** | | |
| CI5504* | CI5104 | 1/2 |
| CI5506* | CI5106 | 3/4 |
| CI5508* | CI5108 | 1 |
| CI5510* | CI5110 | 1-1/4 |
| CI5512* | CI5112 | 1-1/2 |
| CI5516* | CI5116 | 2 |
| CI5520* | CI5120 | 2-1/2 |
| CI5524* | CI5124 | 3 |
| CI5532* | CI5132 | 4 |

* cULus Listed only
Concrete-tight

CI5164 / CI5168



| Cat. No. | Trade Size (in.) | |
|---|---|---|
| | EMT | Rigid |
| **EMT / Rigid Couplings** (Zinc Alloy) | | |
| CI5164 | 1/2 | 1/2 |
| CI5166 | 3/4 | 3/4 |
| CI5168 | 1 | 1 |

Concrete-tight

TK121A-FA






| Cat. No. | Trade Size (in.) | Std. Pkg. Qty |
|---|---|---|
| **EMT / Fire Alarm Set Screw Couplings** (Red Steel) | | |
| TK121A-FA | 1/2 | 50 |
| TK122A-FA | 3/4 | 50 |
| TK123A-FA | 1 | 25 |

# EMT

## Compression Fittings and Couplings

- Models from 2-1/2 to 4 in. are also suitable for rigid and IMC conduit

TC111A



TC711A



| Cat. No. | | Trade Size (in.) |
|---|---|---|
| Regular | Insulated | |
| **EMT Compression Fittings** (Zinc-plated steel) | | |
| TC111A | TC711A | 1/2 |
| TC112A | TC712A | 3/4 |
| TC113A | TC713A | 1 |
| TC114A* | TC714A | 1-1/4 |
| TC115A* | TC715A | 1-1/2 |
| TC116A* | TC716A | 2 |
| TC117A | TC717A | 2-1/2 |
| TC118A | TC718A | 3 |
| TC119A | TC719A | 3-1/2 |
| TC1110A | TC7110A | 4 |

UL FILE NO. E-16592. * O-rings are supplied.
Concrete-tight.

TK111A



| Cat. No. | Trade Size (in.) |
|---|---|
| **EMT Compression Couplings** (Zinc-plated steel) | |
| TK111A | 1/2 |
| TK112A | 3/4 |
| TK113A | 1 |
| TK114A | 1-1/4 |
| TK115A | 1-1/2 |
| TK116A | 2 |
| TK117A | 2-1/2 |
| TK118A | 3 |
| TK119A | 3-1/2 |
| TK1110A | 4 |

UL FILE NO. E-16592.
Concrete-tight.

CI5804 (-IT) / CI5832 (-IT)



Zinc Die Cast Locknut
**IT**: with insulated throat

| Cat. No. | | Trade Size (in.) |
|---|---|---|
| Regular | Insulated | |
| **EMT Compression Fittings** (Zinc Alloy) | | |
| CI5804 | CI5804-IT | 1/2 |
| CI5806 | CI5806-IT | 3/4 |
| CI5808 | CI5808-IT | 1 |
| CI5810 | CI5810-IT | 1-1/4 |
| CI5812 | CI5812-IT | 1-1/2 |
| CI5816 | CI5816-IT | 2 |
| CI5820 | CI5820-IT | 2-1/2 |
| CI5824 | CI5824-IT | 3 |
| CI5832 | CI5832-IT | 4 |

Concrete-tight.

CI5904 / CI5932



| Cat. No. | Trade Size (in.) |
|---|---|
| **EMT Compression Couplings** (Zinc Alloy) | |
| CI5904 | 1/2 |
| CI5906 | 3/4 |
| CI5908 | 1 |
| CI5910 | 1-1/4 |
| CI5912 | 1-1/2 |
| CI5916 | 2 |
| CI5920 | 2-1/2 |
| CI5924 | 3 |
| CI5932 | 4 |

Concrete-tight.

# EMT

## Wet-location fittings



CI5612-IT-WL






CI5706-WL



CI5620-WL

## Specifications

**Material:** Steel body and steel locknut
**Finish:** Electro zinc plated
**Liner (insulated fittings only):** Nylon
**Threads:** Hub threads (NPS)
**Sealing Gasket:** Neoprene
**Sealing Ring:** Nylon
**Use:** Wet locations, concrete-tight

UL Listed Raintight (File E-16592)
UL514B / CSAC22.2–N°18.3
NEMA FB-1
NEMA 3R

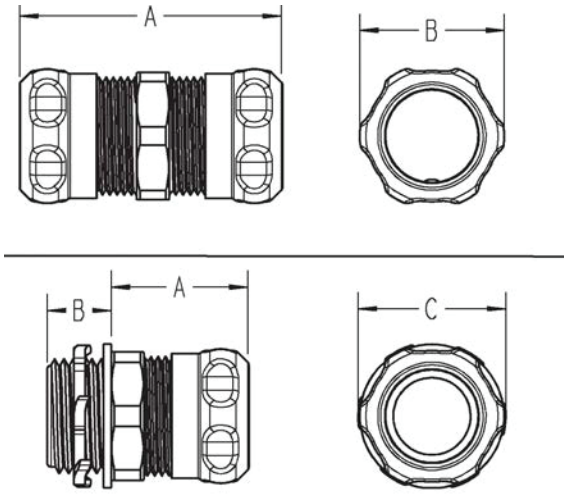


## Wet-location EMT compression fittings

| Cat. No. | Hub Size (in.) | Dimensions (in.) | | | Std. Ctn. |
|---|---|---|---|---|---|
| | | A | B | C | |
| Non-insulated | | | | | |
| CI5604-WL | ½ | 1.22 | 0.47 | 1.14 | 100 |
| CI5606-WL | ¾ | 1.21 | 0.48 | 1.38 | 50 |
| CI5608-WL | 1 | 1.30 | 0.50 | 1.67 | 25 |
| CI5610-WL | 1-¼ | 1.50 | 0.60 | 2.06 | 25 |
| CI5612-WL | 1-½ | 1.53 | 0.65 | 2.27 | 20 |
| CI5616-WL | 2 | 1.67 | 0.73 | 2.77 | 10 |
| CI5620-WL | 2-½ | 2.77 | 0.87 | 3.65 | 5 |
| CI5624-WL | 3 | 2.75 | 0.87 | 4.30 | 5 |
| CI5632-WL | 4 | 3.12 | 0.92 | 5.23 | 5 |
| Insulated | | | | | |
| CI5604-IT-WL | ½ | 1.22 | 0.54 | 1.14 | 100 |
| CI5606-IT-WL | ¾ | 1.21 | 0.55 | 1.38 | 50 |
| CI5608-IT-WL | 1 | 1.30 | 0.57 | 1.67 | 25 |
| CI5610-IT-WL | 1-¼ | 1.50 | 0.69 | 2.06 | 25 |
| CI5612-IT-WL | 1-½ | 1.53 | 0.74 | 2.27 | 20 |
| CI5616-IT-WL | 2 | 1.67 | 0.82 | 2.77 | 10 |
| CI5620-IT-WL | 2-½ | 2.77 | 0.99 | 3.65 | 5 |
| CI5624-IT-WL | 3 | 2.75 | 0.99 | 4.30 | 5 |
| CI5632-IT-WL | 4 | 3.12 | 1.04 | 5.23 | 5 |

## Wet-location EMT compression couplings

| Cat. No. | Hub Size (in.) | Dimensions (in.) | | | Std. Ctn. |
|---|---|---|---|---|---|
| | | A | B | C | |
| CI5704-WL | ½ | 1.94 | 1.14 | – | 100 |
| CI5706-WL | ¾ | 2.09 | 1.38 | – | 50 |
| CI5708-WL | 1 | 2.31 | 1.67 | – | 25 |
| CI5710-WL | 1-¼ | 2.58 | 2.06 | – | 25 |
| CI5712-WL | 1-½ | 2.74 | 2.27 | – | 20 |
| CI5716-WL | 2 | 2.83 | 2.77 | – | 10 |
| CI5720-WL | 2-½ | 4.47 | 3.65 | – | 5 |
| CI5724-WL | 3 | 4.70 | 4.30 | – | 5 |
| CI5732-WL | 4 | 5.75 | 5.23 | – | 5 |

# EMT

## Accessories

CI1304 / CI1316



CI1404 / CI1416



CI1520 / CI1532



| Cat. No. | Trade Size (in.) | Max. EMT Dia. (in.) | Hole Size (in.) |
|---|---|---|---|
| **One Hole EMT Straps** (Galvanized Steel) | | | |
| CI1304 | 1/2 | 0.71 | 1/4 |
| CI1306 | 3/4 | 0.92 | 1/4 |
| CI1308 | 1 | 1.16 | 5/16 |
| CI1310 | 1-1/4 | 1.51 | 7/16 |
| CI1312 | 1-1/2 | 1.74 | 7/16 |
| CI1316 | 2 | 2.20 | 9/16 |
| **Two Hole EMT Straps** (Galvanized Steel) | | | |
| CI1404 | 1/2 | 0.71 | 3/16 |
| CI1406 | 3/4 | 0.92 | 3/16 |
| CI1408 | 1 | 1.16 | 3/16 |
| CI1410 | 1-1/4 | 1.51 | 1/4 |
| CI1412 | 1-1/2 | 1.74 | 1/4 |
| CI1416 | 2 | 2.20 | 3/8 |
| CI1520 | 2-1/2 | 2.88 | 3/8 |
| CI1524 | 3 | 3.50 | 3/8 |
| CI1528 | 3-1/2 | 4.00 | 1/2 |
| CI1532 | 4 | 4.50 | 1/2 |

CI5153



CI5154



| Cat. No. | Trade Size (in.) | | Clamping Range (in.) | |
|---|---|---|---|---|
| | EMT | Flex. | Min. | Max. |
| **EMT / Flex Couplings** (Zinc Alloy) | | | | |
| CI5153 | 1/2 | 3/8 | 0.17 | 0.63 |
| CI5154 | 1/2 | 1/2 | 0.75 | 0.95 |

CI7538



| Cat. No. | Max. Flex. Conduit Dia. (in.) | Hole Size (in.) |
|---|---|---|
| **One Hole Double Sided Strap** (Galvanized Steel) | | |
| CI7538* | 1.05 | 3/16 |

*Any combination of 3/8 in., 1/2 in. and 3/4 in. EMT, rigid conduit, flexible conduit or teck cables

# EMT

## Accessories

500-SC / 503-SC

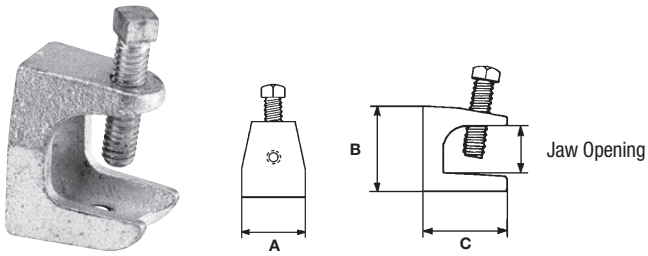


| Cat. No. | Trade Size (in.) | Jaw Opening (in.) | Tap Base and Back | Dimensions (in.) | | |
|---|---|---|---|---|---|---|
| | | | | A | B | C |
| **Beam Clamps** (Malleable Iron) | | | | | | |
| 500-SC | 1/4NC | 15/16 | 1/4-20 | 1 | 1-1/4 | 1-7/16 |
| 501 | 5/16NC | 7/8 | 5/16-18 | 1-9/16 | 1-9/16 | 1-11/16 |
| 502 | 3/8NC | 1 | 3/8-16 | 2 | 1-7/8 | 1-3/4 |
| 503-SC | 1/2NC | 1 | 1/2-13 | 2-1/2 | 2-3/8 | 2-3/8 |

CICH-0404 / CICH-3232



| Cat. No. | Trade Size (in.) | |
|---|---|---|
| | EMT | Rigid |
| **Conduit Hangers-Steel** (with nuts & bolts) | | |
| CICH-0404 | 1/2 | 1/2 |
| CICH-0606 | 3/4 | 3/4 |
| CICH-0808 | 1 | 1 |
| CICH-0010 | 1-1/4 | — |
| CICH-1012 | 1-1/2 | 1-1/4 |
| CICH-1200 | — | 1-1/2 |
| CICH-1616 | 2 | 2 |
| CICH-2020 | 2-1/2 | 2-1/2 |
| CICH-2424 | 3 | 3 |
| CICH-2828 | 3-1/2 | 3-1/2 |
| CICH-3232 * | 4 | 4 |

* Not CSA certified

# EMT

## Pull Elbows and Conduit Fittings

CI5204 / CI5206



Zinc Die Cast Locknut

CI5304 / CI5306 / CI5308-G / CI5310-G



-G: with gasket.

CICA-1/2 / CICA-2



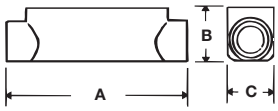


CILBA-1/2 / CILBA-2 / CILBSA-2-1/2 / CILBSA-4



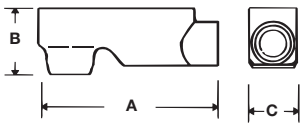


| Cat. No. | Trade Size (in.) | Dimensions (in.) | | |
|---|---|---|---|---|
| | | A | B | C |
| **Pull Elbows, EMT to Box** (Zinc Alloy) | | | | |
| CI5204 | 1/2 | 1-5/16 | 1-1/8 | — |
| CI5206 | 3/4 | 1-1/2 | 1-1/4 | — |
| **Pull Elbows, EMT to EMT** (Zinc Alloy) | | | | |
| CI5304 | 1/2 | 1-5/16 | 15/16 | — |
| CI5306 | 3/4 | 1-5/8 | 1-1/4 | — |
| CI5308-G | 1 | 1-15/16 | 1-5/8 | — |
| CI5310-G | 1-1/4 | 2-1/4 | 2 | — |
| **EMT Conduit Fittings - "C" Type** (Cast Aluminum) | | | | |
| CICA-1/2 | 1/2 | 4-7/8 | 1-3/8 | 1-3/8 |
| CICA-3/4 | 3/4 | 5-9/16 | 1-1/2 | 1-7/16 |
| CICA-1 | 1 | 6-1/2 | 1-3/4 | 1-3/4 |
| CICA-1-1/4 | 1-1/4 | 8-5/8 | 1-15/16 | 2-1/2 |
| CICA-1-1/2 | 1-1/2 | 8-5/8 | 2-11/16 | 2-1/2 |
| CICA-2 | 2 | 10-15/16 | 3 | 3-3/16 |
| **EMT Conduit Fittings - "LB" Type** (Cast Aluminum) | | | | |
| CILBA-1/2 | 1/2 | 4-5/16 | 1-1/2 | 1-3/8 |
| CILBA-3/4 | 3/4 | 4-15/16 | 1-7/8 | 1-9/16 |
| CILBA-1 | 1 | 6-1/16 | 2-1/16 | 1-13/16 |
| CILBA-1-1/4 | 1-1/4 | 7-7/8 | 2-15/16 | 2-1/2 |
| CILBA-1-1/2 | 1-1/2 | 7-7/8 | 3-1/16 | 2-1/2 |
| CILBA-2 | 2 | 10 | 3-3/4 | 3-3/16 |
| CILBSA-2-1/2 * | 2-1/2 | 13 | 7-3/8 | 4-1/4 |
| CILBSA-3 * | 3 | 13 | 7-3/8 | 4-1/4 |
| CILBSA-3-1/2 * | 3-1/2 | 15-1/4 | 9 | 5-1/4 |
| CILBSA-4 * | 4 | 15-1/4 | 9 | 5-1/4 |

Covers and gaskets are included with all aluminum conduit fittings
Types CICA and CILBA are also suitable for use with rigid conduit (NPSM threads)
* For EMT only, not threaded

# EMT

## Conduit Fittings, Accessories and Entrance Heads

CILRL-1/2 / CILRL-2



Combined LL/LR
Left and right
application

CITA-1/2 / CITA-2



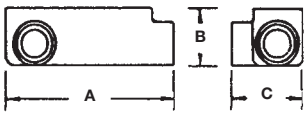


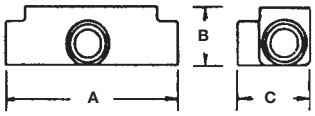


| Cat. No. | Trade Size (in.) | Dimensions (in.) | | |
|---|---|---|---|---|
| | | A | B | C |
| **EMT Conduit Fittings - "LRL" Type** (Cast Aluminum) | | | | |
| CILRL-1/2 | 1/2 | 4-7/16 | 1-11/16 | 2-1/8 |
| CILRL-3/4 | 3/4 | 5-3/16 | 1-7/8 | 2-1/4 |
| CILRL-1 | 1 | 6 | 2-3/16 | 2-1/2 |
| CILRL-1-1/4 | 1-1/4 | 7-15/16 | 2-3/4 | 3-1/2 |
| CILRL-1-1/2 | 1-1/2 | 7-15/16 | 3-1/4 | 3-1/2 |
| CILRL-2 | 2 | 10-3/16 | 3-11/16 | 4-1/8 |
| **EMT Conduit Fittings - "T" Type** (Cast Aluminum) | | | | |
| CITA-1/2 | 1/2 | 4-7/8 | 1-3/8 | 2-1/16 |
| CITA-3/4 | 3/4 | 5-9/16 | 1-3/4 | 2-1/8 |
| CITA-1 | 1 | 6-1/2 | 2 | 2-1/2 |
| CITA-1-1/4 | 1-1/4 | 8-11/16 | 2-5/8 | 3-1/2 |
| CITA-1-1/2 | 1-1/2 | 8-11/16 | 3 | 3-9/16 |
| CITA-2 | 2 | 10-7/8 | 3-1/4 | 4-3/16 |

Covers and gaskets are included with all aluminum conduit fittings
Types CILRL and CITA are also suitable for use with rigid conduit (NPSM Threads)

CIBC-1/2 / CIBC-2



| Cat. No. | Gros. nom. (in.) |
|---|---|
| **Blank Covers for Aluminum Conduit Fittings** (Stamped Aluminum) | |
| CIBC-1/2 | 1/2 |
| CIBC-3/4 | 3/4 |
| CIBC-1 | 1 |
| CIBC-1-1/4 | 1-1/4 |
| CIBC-2 | 2 |

For 1-1/2, use CIBC-1-1/4
Screws not included

CIG-1/2 / CIG-2



| Cat. No. | Trade Size (in.) |
|---|---|
| **Gaskets for Aluminum Conduit Fittings** (Neoprene) | |
| CIG-1/2 | 1/2 |
| CIG-3/4 | 3/4 |
| CIG-1 | 1 |
| CIG-1-1/4 | 1-1/4 |
| CIG-2 | 2 |

For 1-1/2, use CIG-1-1/4

CIEFSA-1/2 / CIEFSA-4



| Cat. No. | Trade Size (in.) |
|---|---|
| **Service Entrance Heads** (Cast Aluminum) | |
| CIEFSA-1/2 | 1/2 |
| CIEFSA-3/4 | 3/4 |
| CIEFSA-1 | 1 |
| CIEFSA-1 1/4 | 1-1/4 |
| CIEFSA-1 1/2 | 1-1/2 |
| CIEFSA-2 | 2 |
| CIEFSA-2 1/2 | 2-1/2 |
| CIEFSA-3 | 3 |
| CIEFSA-3 1/2 | 3-1/2 |
| CIEFSA-4 | 4 |

Consult page D10 for technical specifications

# 4 in. Square Boxes

## Conduit Knockouts



**BC52151-K**

Concentric knockouts.



**CI52151-KSB**

Concentric knockouts.

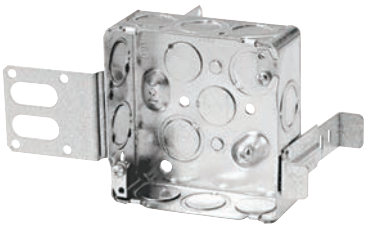

**BC52151-KSSX**

Concentric knockouts. “Wraparound” bracket for 2-1/2 in. and 3-5/8 in. steel studs. With integral support bracket.



**BC53151-K**

Concentric knockouts.

| Cat. No. | Volume (Cu. in.) | Features | | Knockouts | | | |
|---|---|---|---|---|---|---|---|
| | | Bracket | Raised Ground Screw | 1/2 in. sides | 1/2 in. bottom | 3/4 in. sides | 3/4 in. bottom |
| **1-1/2 in. Deep** | | | | | | | |
| BC52151-K | 21.0 | - | yes | 10 | 4 | 6 | 2 |
| CI52151-KSB | 21.0 | “SB” | yes | 8 | 4 | 4 | 2 |
| BC52151-KSSX | 21.0 | “SSX” | yes | 7 | 4 | 3 | 2 |
| BC53151-K | 21.0 | - | - | 10 | - | 6 | - |

# 4 in. Square Boxes

## Conduit Knockouts



**BC52171-HV-KIT**



**BC52171-KSSXHVKIT**

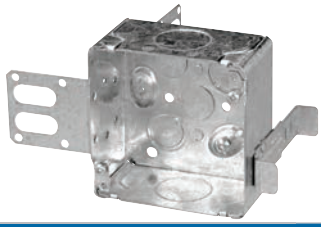

**CI52171-1-SSX-1**

"Wraparound" bracket for 2-1/2 in. and 3-5/8 in. steel studs.
With integral support bracket.
Present for 2 x 1/2 in. drywall thickness.



**CI52171-1**



**BC52171-K**

Concentric knockouts.



**CI52171-KSB**

Concentric knockouts.

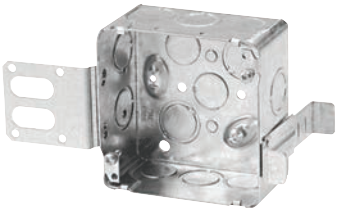

**BC52171-KSSX**

Concentric knockouts. "Wraparound" bracket for 2-1/2 in. and 3-5/8 in. steel studs.
With integral support bracket.
Present for 1 x 1/2 in. drywall thickness.

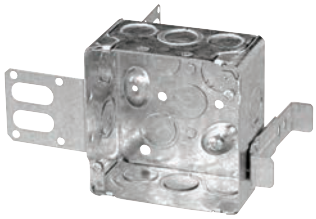

**CI52171-KSSX-1**

Concentric knockouts. "Wraparound" bracket for 2-1/2 in. and 3-5/8 in. steel studs.
With integral support bracket.
Present for 2 x 1/2 in. drywall thickness.

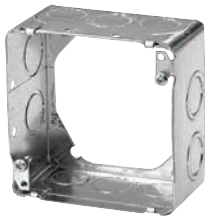

**BC53171-K**

Concentric knockouts.

| Cat. No. | Volume (Cu. in.) | Features | | Knockouts | | | | |
|---|---|---|---|---|---|---|---|---|
| | | Bracket | Raised Ground Screw | 1/2 in. sides | 1/2 in. bottom | 3/4 in. sides | 3/4 in. bottom | 1 in. sides |
| **2-1/8 in. Deep** | | | | | | | | |
| BC52171-HV-KIT | 33.6 | - | yes | 6 | - | 2 | - | - |
| BC52171-KSSXHVKIT | 33.6 | "SSX" | yes | 6 | - | 2 | - | - |
| CI52171-1 | 30.0 | - | yes | - | 4 | - | 2 | 4 |
| CI52171-1-SSX | 21.0 | "SSX" | yes | - | 4 | - | 2 | 2 |
| CI52171-1-SSX-1 | 21.0 | "SSX" | yes | - | 4 | - | 2 | 2 |
| BC52171-K | 30.0 | - | yes | 10 | 4 | 6 | 2 | - |
| CI52171-KSB | 30.0 | "SB" | yes | 8 | 4 | 4 | 2 | - |
| BC52171-KSSX | 30.0 | "SSX" | yes | 7 | 4 | 3 | 2 | - |
| CI52171-KSSX-1 | 30.0 | "SSX" | yes | 7 | 4 | 3 | 2 | - |
| BC53171-K | 30.0 | - | - | 10 | - | 6 | - | - |

# 4 in. Square Boxes

## Covers



BC52-C-1



BC52-C-6



CI52-C-3



BC52-C-0



CI52-C-10 to CI-52-C-62




BC52-C-0-B

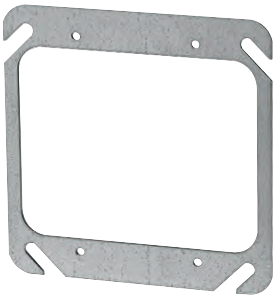

BC52-C-00



BC52-C-17 to CI52-C-18-5/8

| Cat. No. | Description |
|---|---|
| **Flat Covers** | |
| BC52-C-1 | Blank |
| BC52-C-6 | 1/2 in. conduit knockout |
| **Plaster Ring Cover** | |
| CI52-C-3 | Raised 1/2 in. (3.4 cu. in.) Tapped ears on 2-3/4 in. centers |
| **Single Device Covers** | |
| BC52-C-0 | Flat |
| BC52-C-0-B | Flat blank cover |
| CI52-C-10 | Raised 1/8 in. (1.0 cu. in.) |
| BC52-C-13 | Raised 1/2 in. (3.6 cu. in.) |
| CI52-C-14 | Raised 3/4 in. (5.7 cu. in.) |
| CI52-C-14-5/8 | Raised 5/8 in. (4.3 cu. in.) |
| CI52-C-15 | Raised 7/8 in. (6.8 cu. in.) |
| CI52-C-16 | Raised 1-1/4 in. (9.5 cu. in.) |
| CI52-C-62 | Raised 1/4 in. (1.8 cu. in.) |
| **Two Device Covers** | |
| BC52-C-00 | Flat |
| BC52-C-17 | Raised 1/2 in. (6.2 cu. in.) |
| CI52-C-18 | Raised 3/4 in. (10.3 cu. in.) |
| CI52-C-18-5/8 | Raised 5/8 in. (8.3 cu. in.) |

1.4

# 4 in. Square Boxes

## Covers

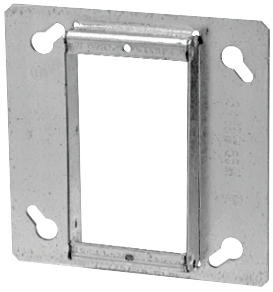

BC52C49-1/2 to CI52-C-51-2

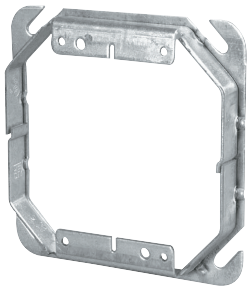

52 C 52 1/2 to 52 C 54 2

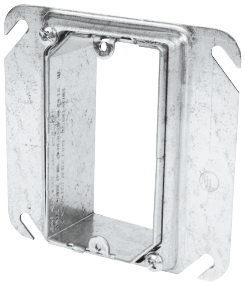

52CADJ

| Cat. No. | Description |
|---|---|
| **One Device Square Cornered Tile Covers** | |
| BC52C49-1/2 | Raised 1/2 in. (3.4 cu. in.) |
| BC52C49-3/4 | Raised 3/4 in. (5.3 cu. in.) |
| BC52-C-49-5/8 | Raised 5/8 in. (4.3 cu. in.) |
| BC52-C-49-1 | Raised 1 in. (6.8 cu. in.) |
| CI52-C-49-1 1/4 | Raised 1-1/4 in. (8.6 cu. in.) |
| CI52-C-50-1 1/2 | Raised 1-1/2 in. (10.0 cu. in.) |
| CI52-C-51-2 | Raised 2 in. (14.0 cu. in.) |
| **One Device Square Cornered Tile Covers - Adjustable** | |
| 52CADJ | Adjustable from 1/2 in. to 1-1/2 in. raise (from 3.4 to 10.0 cu. in.) |
| **Two Device Square Cornered Tile Covers** | |
| 52 C 52 1/2 | Raised 1/2 in. (6.0 cu. in.) |
| 52 C 52 5/8 | Raised 5/8 in. (8.3 cu. in.) |
| 52 C 52 3/4 | Raised 3/4 in. (9.0 cu. in.) |
| 52 C 52 1 | Raised 1 in. (12.5 cu. in.) |
| 52 C 52 1 1/4 | Raised 1-1/4 in. (15.5 cu. in.) |
| 52 C 53 1 1/2 | Raised 1-1/2 in. (19.0 cu. in.) |
| 52 C 54 2 | Raised 2 in. (25.5 cu. in.) |

# 4 in. Square Boxes

## Covers



BC8361 | BC8362 | BC8363

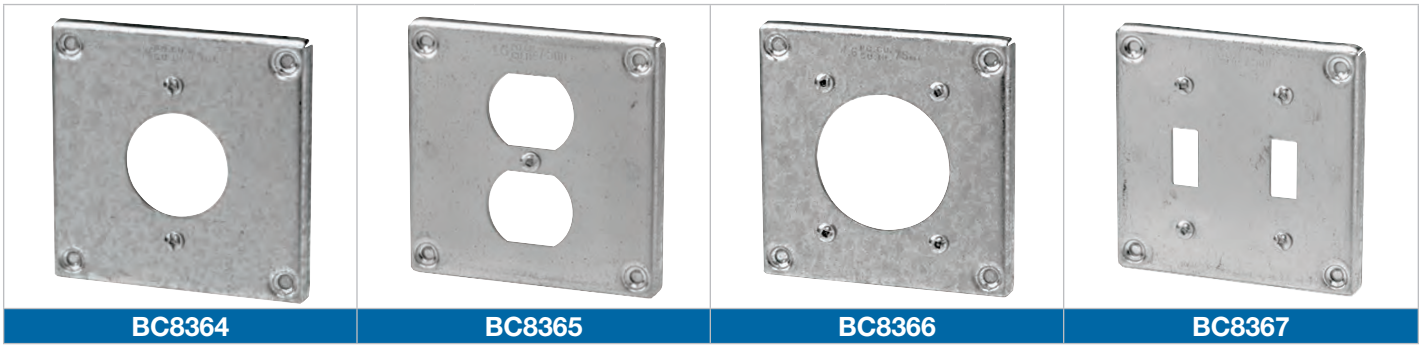

BC8364 | BC8365 | BC8366 | BC8367

| Cat. No. | Description |
|---|---|
| **3/8 in. Raised Surface Covers** (4.6 cu. in.) **Device Mount** | |
| BC8361 | One toggle switch |
| BC8362 | For 2-5/8 in. diameter 30 / 50 A single receptacle |
| BC8363 | For 1-13/32 in. diameter 15 A single receptacle |
| BC8364 | For 1-19/32 in. diameter 20 / 30 A single locking receptacle |
| BC8365 | One duplex receptacle |
| BC8366 | For 2-9/64 in. diameter 30 A single receptacle |
| BC8367 | Two toggle switches |

Complete with device mounting screws

| NEMA Configuration | | | | | | | |
|---|---|---|---|---|---|---|---|
| Cover | A | V | Pole | Wire | Phase | Rec. Dia | NEMA |
| BC8363 | 15 | 125 | 2 | 3 | 1 | 1.406 | 5-15R |
| BC8364 | 20 | 125 | 2 | 3 | 1 | 1.562 | L5-20R |
| BC8364 | 20 | 250 | 2 | 3 | 1 | 1.562 | L6-20-R |
| BC8364 | 20 | 347 | 2 | 3 | 1 | 1.562 | L24-20R |
| BC8364 | 20 | 600 | 2 | 3 | 1 | 1.562 | L9-20R |
| BC8364 | 20 | 125/250 | 3 | 3 | 1 | 1.562 | L10-20R |
| BC8364 | 20 | 250 | 3 | 3 | 3 | 1.562 | L11-20R |
| BC8364 | 20 | 125/250 | 3 | 4 | 3 | 1.562 | L14-20R |
| BC8366 | 30 | 125 | 2 | 3 | 1 | 2.109 | 5-30R |
| BC8364 | 30 | 125 | 2 | 3 | 1 | 1.562 | L5-30R |
| BC8366 | 30 | 250 | 2 | 3 | 1 | 2.109 | 6-30R |
| BC8364 | 30 | 250 | 2 | 3 | 1 | 1.562 | L6-30R |
| BC8362 | 30 | 125/250 | 3 | 4 | 3 | 2.647 | 14-30R |
| BC8362 | 50 | 125/250 | 3 | 4 | 1 | 2.647 | 14-50R |

# 4 in. Square Boxes

## Covers

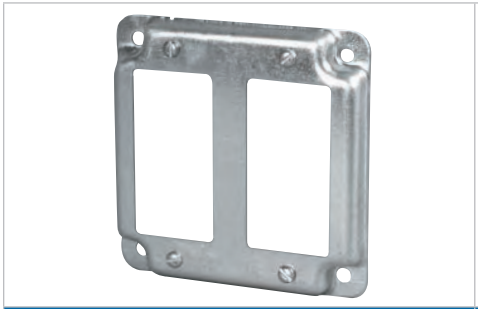
BC8368

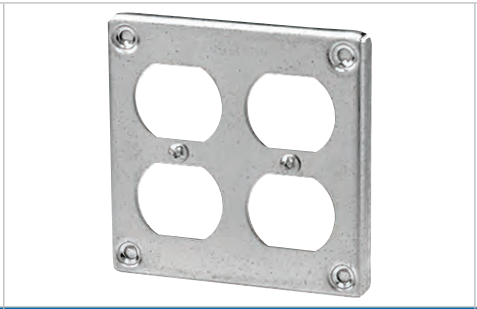
BC8371


BC8375

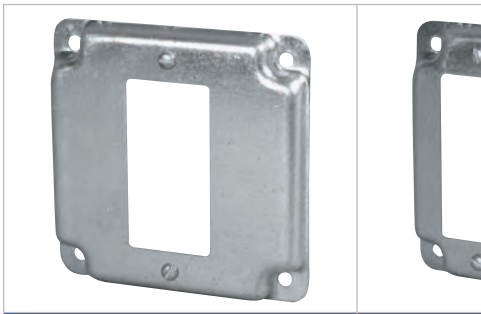
BC8376


BC8377

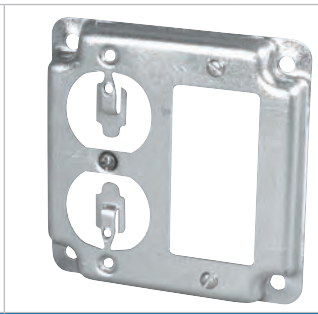
BC8378

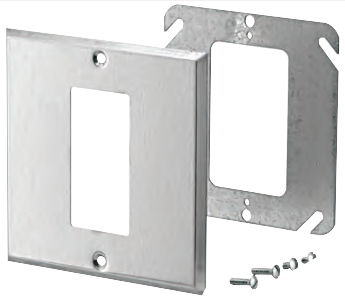
BC97002

| Cat. No. | Description |
|---|---|
| **3/8 in. Raised Surface Covers** (4.6 cu. in.) | |
| BC8368 | 2 Decora/GFCI |
| BC8371 | Two duplex receptacles |
| BC8375 | One toggle switch, one duplex receptacle |
| BC8376 | One Decora/GFCI |
| BC8377 | One toggle switch, one Decora/GFCI |
| BC8378 | One duplex receptacle, one Decora/GFCI |
| **GFCI Conversion Kits** (Stainless Steel / Steel) | |
| BC97002 | To install GFCI on 4 in. square boxes. Complete with mounting screws |

Complete with device mounting screws
When extra capacity is required, the 8300 Series of 4 in. square covers can be mounted on a 72 Series of 4-11/16 in. square boxes using a CI72-A-52 adaptor. (see page A41)

# 4 in. Square Boxes

## Conduit Knockouts



**BC52151-K**

Concentric knockouts.



**CI52151-KSB**

Concentric knockouts.

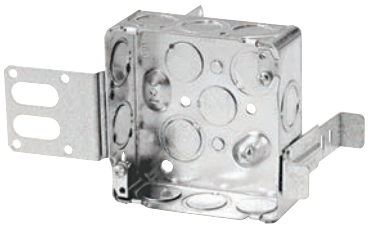

**BC52151-KSSX**

Concentric knockouts. "Wraparound" bracket for 2-1/2 in. and 3-5/8 in. steel studs. With integral support bracket.



**BC53151-K**

Concentric knockouts.

| Cat. No. | Volume (Cu. in.) | Features | | Knockouts | | | |
|---|---|---|---|---|---|---|---|
| | | Bracket | Raised Ground Screw | 1/2 in. sides | 1/2 in. bottom | 3/4 in. sides | 3/4 in. bottom |
| **1-1/2 in. Deep** | | | | | | | |
| 1.5 BC52151-K | 21.0 | - | yes | 10 | 4 | 6 | 2 |
| CI52151-KSB | 21.0 | "SB" | yes | 8 | 4 | 4 | 2 |
| BC52151-KSSX | 21.0 | "SSX" | yes | 7 | 4 | 3 | 2 |
| BC53151-K | 21.0 | - | - | 10 | - | 6 | - |

# 4 in. Square Boxes

## Conduit Knockouts



**BC52171-HV-KIT**



**BC52171-KSSXHVKIT**

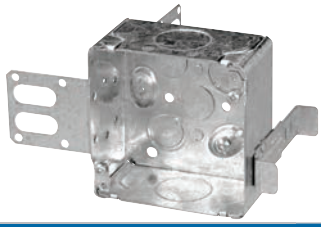

**CI52171-1-SSX-1**

"Wraparound" bracket for 2-1/2 in. and 3-5/8 in. steel studs.
With integral support bracket.
Present for 2 x 1/2 in. drywall thickness.



**CI52171-1**



**BC52171-K**

Concentric knockouts.



**CI52171-KSB**

Concentric knockouts.

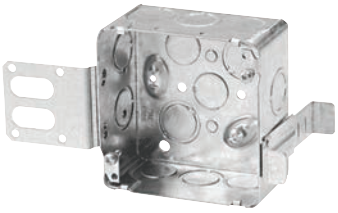

**BC52171-KSSX**

Concentric knockouts. "Wraparound" bracket for 2-1/2 in. and 3-5/8 in. steel studs.
With integral support bracket.
Present for 1 x 1/2 in. drywall thickness.

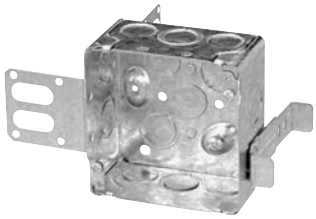

**CI52171-KSSX-1**

Concentric knockouts. "Wraparound" bracket for 2-1/2 in. and 3-5/8 in. steel studs.
With integral support bracket.
Present for 2 x 1/2 in. drywall thickness.

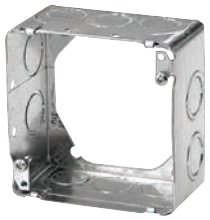

**BC53171-K**

Concentric knockouts.

| Cat. No. | Volume (Cu. in.) | Features | | Knockouts | | | | |
|---|---|---|---|---|---|---|---|---|
| | | Bracket | Raised Ground Screw | 1/2 in. sides | 1/2 in. bottom | 3/4 in. sides | 3/4 in. bottom | 1 in. sides |
| **2-1/8 in. Deep** | | | | | | | | |
| BC52171-HV-KIT | 33.6 | - | yes | 6 | - | 2 | - | - |
| BC52171-KSSXHVKIT | 33.6 | "SSX" | yes | 6 | - | 2 | - | - |
| CI52171-1 | 30.0 | - | yes | - | 4 | - | 2 | 4 |
| CI52171-1-SSX | 21.0 | "SSX" | yes | - | 4 | - | 2 | 2 |
| CI52171-1-SSX-1 | 21.0 | "SSX" | yes | - | 4 | - | 2 | 2 |
| BC52171-K | 30.0 | - | yes | 10 | 4 | 6 | 2 | - |
| CI52171-KSB | 30.0 | "SB" | yes | 8 | 4 | 4 | 2 | - |
| BC52171-KSSX | 30.0 | "SSX" | yes | 7 | 4 | 3 | 2 | - |
| CI52171-KSSX-1 | 30.0 | "SSX" | yes | 7 | 4 | 3 | 2 | - |
| BC53171-K | 30.0 | - | - | 10 | - | 6 | - | - |

# 4 in. Square Boxes

## Covers



BC52-C-1



BC52-C-6



CI52-C-3



BC52-C-0



CI52-C-10 to CI-52-C-62




BC52-C-0-B

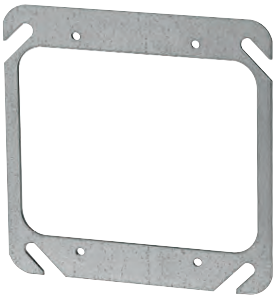

BC52-C-00



BC52-C-17 to CI52-C-18-5/8

| Cat. No. | Description |
|---|---|
| **Flat Covers** | |
| BC52-C-1 | Blank |
| BC52-C-6 | 1/2 in. conduit knockout |
| **Plaster Ring Cover** | |
| CI52-C-3 | Raised 1/2 in. (3.4 cu. in.) Tapped ears on 2-3/4 in. centers |
| **Single Device Covers** | |
| BC52-C-0 | Flat |
| BC52-C-0-B | Flat blank cover |
| CI52-C-10 | Raised 1/8 in. (1.0 cu. in.) |
| BC52-C-13 | Raised 1/2 in. (3.6 cu. in.) |
| CI52-C-14 | Raised 3/4 in. (5.7 cu. in.) |
| CI52-C-14-5/8 | Raised 5/8 in. (4.3 cu. in.) |
| CI52-C-15 | Raised 7/8 in. (6.8 cu. in.) |
| CI52-C-16 | Raised 1-1/4 in. (9.5 cu. in.) |
| CI52-C-62 | Raised 1/4 in. (1.8 cu. in.) |
| **Two Device Covers** | |
| BC52-C-00 | Flat |
| BC52-C-17 | Raised 1/2 in. (6.2 cu. in.) |
| CI52-C-18 | Raised 3/4 in. (10.3 cu. in.) |
| CI52-C-18-5/8 | Raised 5/8 in. (8.3 cu. in.) |

# 4 in. Square Boxes

## Covers

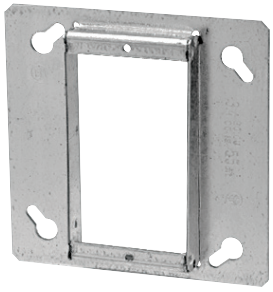

BC52C49-1/2 to CI52-C-51-2

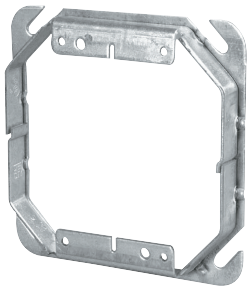

52 C 52 1/2 to 52 C 54 2

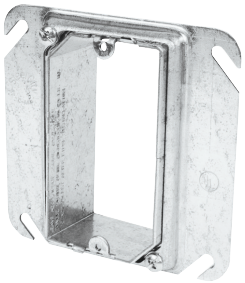

52CADJ

| Cat. No. | Description |
|---|---|
| **One Device Square Cornered Tile Covers** | |
| BC52C49-1/2 | Raised 1/2 in. (3.4 cu. in.) |
| BC52C49-3/4 | Raised 3/4 in. (5.3 cu. in.) |
| BC52-C-49-5/8 | Raised 5/8 in. (4.3 cu. in.) |
| BC52-C-49-1 | Raised 1 in. (6.8 cu. in.) |
| CI52-C-49-1 1/4 | Raised 1-1/4 in. (8.6 cu. in.) |
| CI52-C-50-1 1/2 | Raised 1-1/2 in. (10.0 cu. in.) |
| CI52-C-51-2 | Raised 2 in. (14.0 cu. in.) |
| **One Device Square Cornered Tile Covers - Adjustable** | |
| 52CADJ | Adjustable from 1/2 in. to 1-1/2 in. raise (from 3.4 to 10.0 cu. in.) |
| **Two Device Square Cornered Tile Covers** | |
| 52 C 52 1/2 | Raised 1/2 in. (6.0 cu. in.) |
| 52 C 52 5/8 | Raised 5/8 in. (8.3 cu. in.) |
| 52 C 52 3/4 | Raised 3/4 in. (9.0 cu. in.) |
| 52 C 52 1 | Raised 1 in. (12.5 cu. in.) |
| 52 C 52 1 1/4 | Raised 1-1/4 in. (15.5 cu. in.) |
| 52 C 53 1 1/2 | Raised 1-1/2 in. (19.0 cu. in.) |
| 52 C 54 2 | Raised 2 in. (25.5 cu. in.) |

# 4 in. Square Boxes

## Covers



BC8361 | BC8362 | BC8363

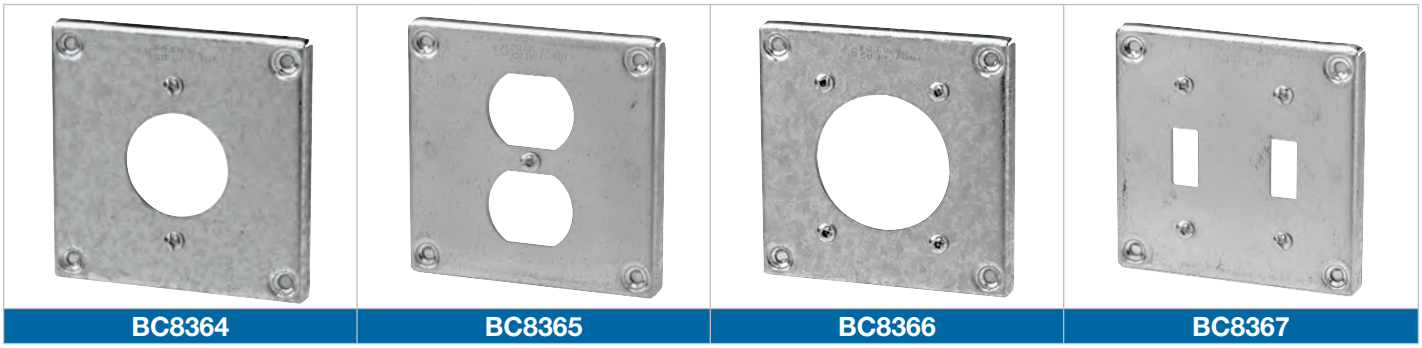

BC8364 | BC8365 | BC8366 | BC8367

| Cat. No. | Description |
|---|---|
| **3/8 in. Raised Surface Covers** (4.6 cu. in.) **Device Mount** | |
| BC8361 | One toggle switch |
| BC8362 | For 2-5/8 in. diameter 30 / 50 A single receptacle |
| BC8363 | For 1-13/32 in. diameter 15 A single receptacle |
| BC8364 | For 1-19/32 in. diameter 20 / 30 A single locking receptacle |
| BC8365 | One duplex receptacle |
| BC8366 | For 2-9/64 in. diameter 30 A single receptacle |
| BC8367 | Two toggle switches |

Complete with device mounting screws

| NEMA Configuration | | | | | | | |
|---|---|---|---|---|---|---|---|
| Cover | A | V | Pole | Wire | Phase | Rec. Dia | NEMA |
| BC8363 | 15 | 125 | 2 | 3 | 1 | 1.406 | 5-15R |
| BC8364 | 20 | 125 | 2 | 3 | 1 | 1.562 | L5-20R |
| BC8364 | 20 | 250 | 2 | 3 | 1 | 1.562 | L6-20-R |
| BC8364 | 20 | 347 | 2 | 3 | 1 | 1.562 | L24-20R |
| BC8364 | 20 | 600 | 2 | 3 | 1 | 1.562 | L9-20R |
| BC8364 | 20 | 125/250 | 3 | 3 | 1 | 1.562 | L10-20R |
| BC8364 | 20 | 250 | 3 | 3 | 3 | 1.562 | L11-20R |
| BC8364 | 20 | 125/250 | 3 | 4 | 3 | 1.562 | L14-20R |
| BC8366 | 30 | 125 | 2 | 3 | 1 | 2.109 | 5-30R |
| BC8364 | 30 | 125 | 2 | 3 | 1 | 1.562 | L5-30R |
| BC8366 | 30 | 250 | 2 | 3 | 1 | 2.109 | 6-30R |
| BC8364 | 30 | 250 | 2 | 3 | 1 | 1.562 | L6-30R |
| BC8362 | 30 | 125/250 | 3 | 4 | 3 | 2.647 | 14-30R |
| BC8362 | 50 | 125/250 | 3 | 4 | 1 | 2.647 | 14-50R |

# 4 in. Square Boxes

## Covers

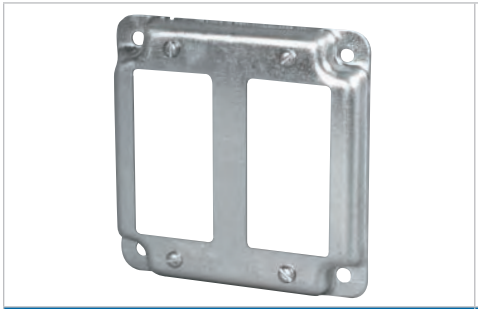
BC8368

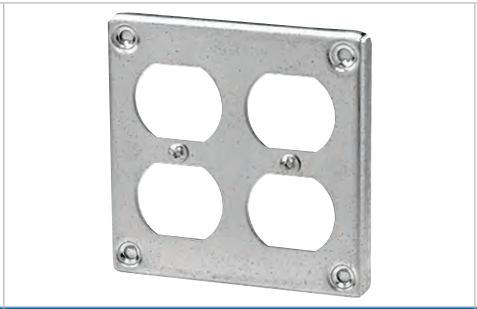
BC8371


BC8375

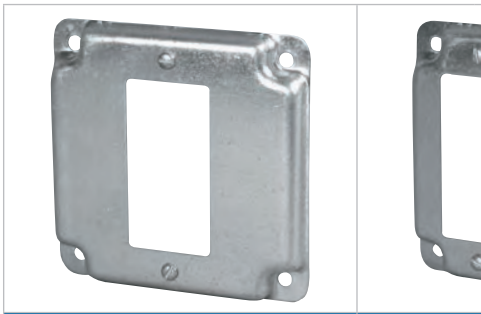
BC8376


BC8377

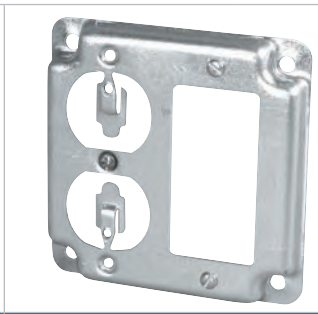
BC8378

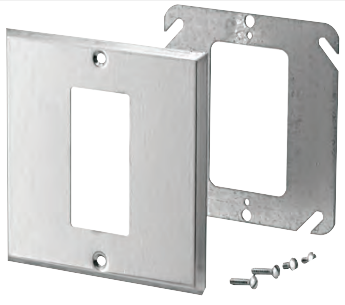
BC97002

| Cat. No. | Description |
|---|---|
| **3/8 in. Raised Surface Covers** (4.6 cu. in.) | |
| BC8368 | 2 Decora/GFCI |
| BC8371 | Two duplex receptacles |
| BC8375 | One toggle switch, one duplex receptacle |
| BC8376 | One Decora/GFCI |
| BC8377 | One toggle switch, one Decora/GFCI |
| BC8378 | One duplex receptacle, one Decora/GFCI |
| **GFCI Conversion Kits** (Stainless Steel / Steel) | |
| BC97002 | To install GFCI on 4 in. square boxes. Complete with mounting screws |

Complete with device mounting screws
When extra capacity is required, the 8300 Series of 4 in. square covers can be mounted on a 72 Series of 4-11/16 in. square boxes using a CI72-A-52 adaptor. (see page A41)

# Utility Boxes and Covers

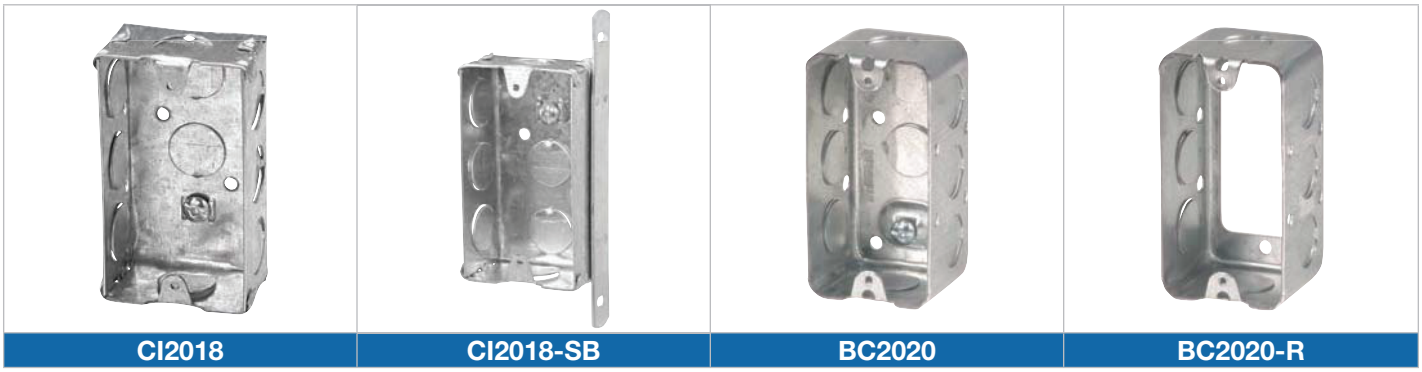

CI2018 | CI2018-SB | BC2020 | BC2020-R

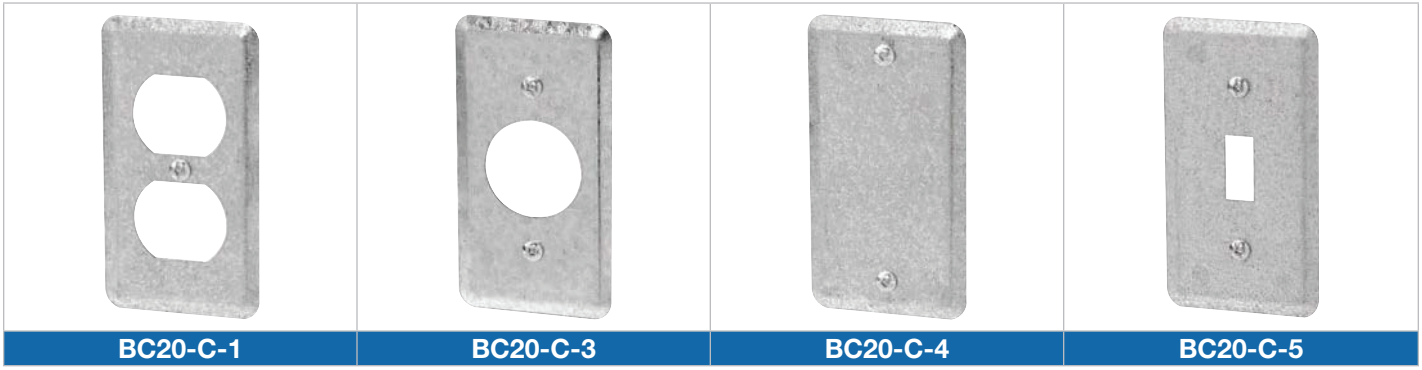

BC20-C-1 | BC20-C-3 | BC20-C-4 | BC20-C-5

| Cat. No. | Volume (Cu. in.) | Features | | Knockouts | | |
|---|---|---|---|---|---|---|
| | | Bracket | Raised Ground Screw | 1/2 in. ends | 1/2 in. bottom | 1/2 in. sides |
| **1-1/2 in. Deep — 4 in. x 2-1/4 in.** | | | | | | |
| CI2018 | 13.0 | - | no | 2 | 2 | 6 |
| CI2018-SB | 13.0 | "SB" | no | 2 | 2 | 3 |
| **1-7/8 in. Deep — 4 in. x 2-1/8 in.** | | | | | | |
| BC2020 | 14.0 | - | yes | 2 | 2 | 6 |
| BC2020-R | 14.0 | - | - | 2 | - | 6 |

| Cat. No. | Description |
|---|---|
| **Covers — 20 Series** | |
| BC20-C-1 | For duplex receptacle |
| BC20-C-3 | For 1-13/32 in. diameter 15 A single receptacle |
| BC20-C-4 | Blank |
| BC20-C-5 | For toggle switch |

1.6

**Note**: BC2020-R can be installed on CI2018 / BC2020 Series Covers: Device mounting screws included

# Utility Boxes and Covers




| Cat. No. | Volume (Cu. in.) | Features | | Knockouts | | |
|---|---|---|---|---|---|---|
| | | Bracket | Raised Ground Screw | 1/2 in. ends | 1/2 in. bottom | 1/2 in. sides |
| **1-1/2 in. Deep – 4 in. x 2-1/4 in.** | | | | | | |
| CI1141 | 13.0 | mounting ears | no | 2 | 2 | 6 |
| **1-7/8 in. Deep – 4 in. x 2-3/8 in.** | | | | | | |
| BC1110 | 16.5 | - | yes | 2 | 2 | 6 |
| CI1110-SB | 16.5 | "SB" | yes | 2 | 2 | 3 |
| BC1110-R | 16.5 | - | - | 2 | - | 6 |
| **2-1/8 in. Deep – 4 in. x 2-1/2 in.** | | | | | | |
| 1151 | 18.5 | - | yes | 2 | 2 | - |
| 1198 | 18.5 | - | yes | 2 | 2 | - |
| 1199 | 18.5 | - | yes | 2 | 2 | - |
| **1-7/8 in. Deep – 4 in. x 2-3/8 in.** | | | | | | |
| BC1110-LSKO | 16.5 | - | yes | 2 | 2 | - |
| BC1110-SSX | 16.5 | "SSX" | yes | 2 | 2 | - |

| Cat. No. | Description | Cat. No. | Description |
|---|---|---|---|
| **Covers – 11 Series** | | | |
| BC11-C-1 | For duplex receptacle | BC11-C-10 | Decora/GFCI |
| BC11-C-2 | For 1-19/32 in. diameter 20 A single locking receptacle | CI11-C-10-HV | Decora 347 V |
| BC11-C-3 | For 1-13/32 in. diameter 15 A single receptacle | BC11-C-4-HV | Blank 347 V |
| BC11-C-4 | Blank | BC11-C-5-HV | For toggle switch |
| BC11-C-5 | For toggle switch | | |

Note: Covers: Device mounting screws included

# Câbles armés et conduits flexibles

## Connecteurs

CI70



Contre-écrou
en zinc moulé

L-16



Contre-écrou
en zinc moulé

CI71 / CI73

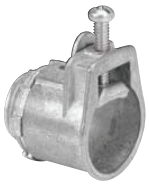

Contre-écrou
en zinc moulé

CI2175



Contre-écrou
en zinc moulé

CI2210 / CI2236



Contre-écrou
en zinc moulé

CI2238 / CI2240



Contre-écrou
en zinc moulé

CI4090



Contre-écrou
en aluminium

1.7

| N° de cat. | Grosseur nom. (po) | Gamme de serrage (po) | | Applications suggérées | Conduit flexible |
|---|---|---|---|---|---|
| | | Min. | Max. | AC90 (BX) | |
| **Connecteurs à une vis** (alliage de zinc) | | | | | |
| L-16 | 3/8 | 0,12 | 0,63 | 14/2-10/2-14/3-10/3-14/4-10/4 | 5/16-3/8 |
| CI70 | 3/8 | 0,13 | 0,70 | 14/2, 12/2, 10/2, 14/3, 12/3, 10/3, 14/4 | 3/8 |
| CI71 | 1/2 | 0,33 | 0,95 | 14/2-10/2; 14/3-10/3; 14/4-8/4 | 5/16, 3/8, 1/2 |
| CI72 | 3/4 | 0,60 | 1,15 | 6/2; 8/3-3/3; 8/4-3/4 | 1/2, 3/4 |
| CI73 | 1 | 0,93 | 1,47 | 3/3-3/0/3; 2/4-1/4 | 3/4, 1 |
| **Connecteurs doubles** (alliage de zinc) | | | | | |
| CI2175 | 3/8 | 0,15 | 0,65 | 14/2-10/2; 14/3-10/3; 14/4-12/4 | 3/8 |
| **Connecteurs coudés à 90°** (alliage de zinc) | | | | | |
| CI2210 | 3/8 | 0,40 | 0,63 | 14/2-10/2; 14/3-10/3 14/4-12/4 | 3/8 |
| CI2211 | 1/2 | 0,65 | 0,97 | 8/2; 8/3; 10/4 | 1/2 |
| CI2214 | 3/4 | 0,77 | 1,12 | 1/0/1-4/0/1; 6/2-4/2; 8/3-3/3; 8/4-6/4 | 3/4 |
| CI2216 | 1 | 1,06 | 1,40 | 4/0/1-350/1; 2/2; 4/3-2/3; 6/4-4/4 | 1 |
| CI2218 | 1-1/4 | 1,34 | 1,65 | 500/1-750/1; 1/3-3/0/3; 1/4-1/0/4 | 1-1/4 |
| CI2234 | 1-1/2 | 1,70 | 2,15 | 600/1-1000/1; 2/0/3; 1/4-3/0/4 | 1-1/2 |
| CI2236 | 2 | 1,51 | 2,47 | 600/1-1000/1; 2/0/3-400/3; 1/4-4/0/4 | 1-1/2 - 2 |
| **Connecteurs coudés à 90°** (aluminium) | | | | | |
| CI2238 | 2-1/2 | 2,50 | 3,08 | 600/3-750/3 | 2-1/2 |
| CI2240 | 3 | 2,95 | 3,55 | 1000/3 | 3 |
| CI4090 | 4 | 4,17 | 4,62 | — | 4 |

Utilisés en emplacements secs, ces connecteurs conviennent également aux câbles ACWU90 de diamètres équivalents. Un connecteur et un contre-écrou non ferreux doivent servir au raccord de câbles à monoconducteur lorsque le courant nominal est de plus de 200 ampères.

**REMARQUE**: Les connecteurs de grosseur nominale de 3/8 po se posent sur une débouchure de 1/2 po.

Dans l'industrie électrique, les améliorations techniques sont chose de tous les jours. Il en va donc de soi que les fabricants de câbles modifient leurs produits de temps à autre. Pour cette raison, il est fortement recommandé de vérifier la grosseur des câbles auprès du fabricant avant de faire le choix d'un connecteur.

Voir le guide technique pour les dimensions (D38-D39).

# Utility Boxes and Covers



CI2018



CI2018-SB



BC2020



BC2020-R

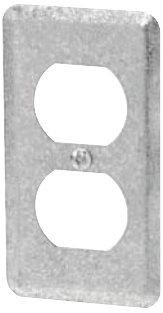

BC20-C-1

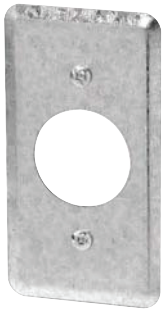

BC20-C-3



BC20-C-4



BC20-C-5

| Cat. No. | Volume (Cu. in.) | Features | | Knockouts | | |
|---|---|---|---|---|---|---|
| | | Bracket | Raised Ground Screw | 1/2 in. ends | 1/2 in. bottom | 1/2 in. sides |
| **1-1/2 in. Deep — 4 in. x 2-1/4 in.** | | | | | | |
| CI2018 | 13.0 | - | no | 2 | 2 | 6 |
| CI2018-SB | 13.0 | "SB" | no | 2 | 2 | 3 |
| **1-7/8 in. Deep — 4 in. x 2-1/8 in.** | | | | | | |
| 1.8 BC2020 | 14.0 | - | yes | 2 | 2 | 6 |
| BC2020-R | 14.0 | - | - | 2 | - | 6 |

| Cat. No. | Description |
|---|---|
| **Covers — 20 Series** | |
| BC20-C-1 | For duplex receptacle |
| BC20-C-3 | For 1-13/32 in. diameter 15 A single receptacle |
| BC20-C-4 | Blank |
| BC20-C-5 | For toggle switch |

**Note**: BC2020-R can be installed on CI2018 / BC2020 Series Covers: Device mounting screws included

# Utility Boxes and Covers




| Cat. No. | Volume (Cu. in.) | Features | | Knockouts | | |
|---|---|---|---|---|---|---|
| | | Bracket | Raised Ground Screw | 1/2 in. ends | 1/2 in. bottom | 1/2 in. sides |
| **1-1/2 in. Deep – 4 in. x 2-1/4 in.** | | | | | | |
| CI1141 | 13.0 | mounting ears | no | 2 | 2 | 6 |
| **1-7/8 in. Deep – 4 in. x 2-3/8 in.** | | | | | | |
| BC1110 | 16.5 | - | yes | 2 | 2 | 6 |
| CI1110-SB | 16.5 | "SB" | yes | 2 | 2 | 3 |
| BC1110-R | 16.5 | - | - | 2 | - | 6 |
| **2-1/8 in. Deep – 4 in. x 2-1/2 in.** | | | | | | |
| 1151 | 18.5 | - | yes | 2 | 2 | - |
| 1198 | 18.5 | - | yes | 2 | 2 | - |
| 1199 | 18.5 | - | yes | 2 | 2 | - |
| **1-7/8 in. Deep – 4 in. x 2-3/8 in.** | | | | | | |
| BC1110-LSKO | 16.5 | - | yes | 2 | 2 | - |
| BC1110-SSX | 16.5 | "SSX" | yes | 2 | 2 | - |

| Cat. No. | Description | Cat. No. | Description |
|---|---|---|---|
| **Covers – 11 Series** | | | |
| BC11-C-1 | For duplex receptacle | BC11-C-10 | Decora/GFCI |
| BC11-C-2 | For 1-19/32 in. diameter 20 A single locking receptacle | CI11-C-10-HV | Decora 347 V |
| BC11-C-3 | For 1-13/32 in. diameter 15 A single receptacle | BC11-C-4-HV | Blank 347 V |
| BC11-C-4 | Blank | BC11-C-5-HV | For toggle switch |
| BC11-C-5 | For toggle switch | | |

Note: Covers: Device mounting screws included

## Type ABR

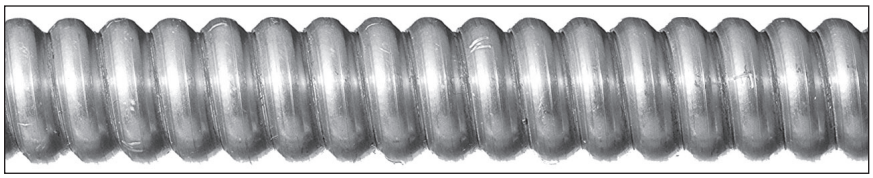

| Trade Size (in.) | Cat. No. | Coil Length (m) | Cat. No. | Coil Length (m) | Cat. No. | Coil Length (m) | Cat. No. | Reel Content* (m) | Wt. kg/30m |
|---|---|---|---|---|---|---|---|---|---|
| - | - | - | - | - | **ABR716-30** | 30 | **ABR716-300** | 300 | - |
| 3/8 | **ABR038-8†** | 8 | **ABR038-15†** | 15 | **ABR038-30†** | 30 | **ABR038-300†** | 300 | 7.0 |
| 1/2 | **ABR050-8** | 8 | **ABR050-15** | 15 | **ABR050-30** | 30 | **ABR050-300** | 300 | 9.5 |
| 3/4 | **ABR075-8** | 8 | **ABR075-15** | 15 | **ABR075-30** | 30 | **ABR075-150** | 150 | 13.5 |
| 1 | - | - | **ABR100-15** | 15 | - | - | **ABR100-120** | 120 | 24.0 |
| 1-1/4 | - | - | **ABR125-15** | 15 | - | - | **ABR125-120** | 120 | 31.0 |
| 1-1/2 | - | - | **ABR150-8** | 8 | - | - | **ABR150-90** | 90 | 47.0 |
| 2 | - | - | **ABR200-8** | 8 | - | - | **ABR200-45** | 45 | 67.0 |
| 2-1/2 | - | - | **ABR250-8** | 8 | - | - | | - | 92.0 |
| 3 | - | - | **ABR300-8** | 8 | - | - | | - | 107.0 |
| 3-1/2 | - | - | **ABR350-8** | 8 | - | - | | - | 122.0 |
| 4 | - | - | **ABR400-8** | 8 | - | - | | - | 142.0 |

1.9

*See Chart on p.153 for dimensions and tolerances.*
** See p.153 for label and packaging detail.*
*Note: Dimensions and Bend Radii are identical to Type BR, p. 140.*
*† CSA Certified.*

### Type ABR
This non-jacketed flexible aluminum conduit has many universal wiring applications. It is often referred to as "Greenfield" or "Reduced Wall Flex".

### Construction
Type ABR is formed using a high strength aluminum alloy strip. The result is a conduit with similar characteristics to those of type BR steel but at about 1/3 the weight.

### Applications
General Use:
In accordance with CEC Rule 12-1002 (1) the flexible metal conduit is permitted in or on buildings of either combustible or non-combustible constructions.
Restriction and Exception:
CEC Rule 12-1004 (a) states:"12 (3/8) trade size flexible metal conduit shall be permitted to be used for runs of not more than 1.5 m (5 ft) for the connection of equipment." and CEC Rule 12-1004 (b) states:"12 (3/8) trade size liquidtight flexible conduit may be used as permitted by this code."
Securements with straps:
CEC Rule 12-1010 (3) states: "When flexible metal conduit is installed, it shall be secured at intervals not exceeding 1.5 m (5 ft) and within 300 mm (12 in.) on each side of every outlet box or fitting except where flexible metal conduit is fished and except for lengths of not over 900 mm (3 ft) at terminals where flexibility is necessary."
Conductor fill:
CEC Rule 12-1014 defines the maximum number of conductor, the CEC Tables 6 provides the maximum number of conductors of one size in trade sizes of conduit, CEC Table 8 provides the maximum allowable per cent conduit fill, and CEC Table 9 provides the cross-sectional areas of conduit.
Applications: refer to Type BR, p. 140.

### Listing / Certification
Listed. (sizes 3/8 through 3 in.). Conforms to UL Standard ANSI/UL-1 for Flexible Metal Conduit.
Certified. (**3/8 inch size only**). Conforms to CSA 22.2 No. 56 for use per CEC C22.1 Section 12-1300.
Meets Federal Specification WW-C-566c Type II

## Type ABRH

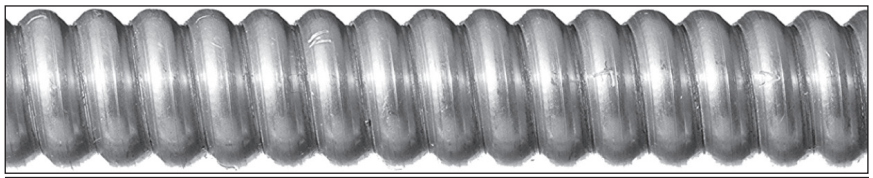

| Trade Size | CSA Metric Desig. | T&B Type | Internal Diameter (in.) Min. | Internal Diameter (in.) Max. | Outer Diameter (in.) Min. | Outer Diameter (in.) Max. | Inside Bend Radius | WT. Lbs. per 100 Ft. | Coil Lenght Mtr. |
|---|---|---|---|---|---|---|---|---|---|
| 3/8 | 12 | **ABRH038** | 0.375 | 0.393 | 0.560 | 0.610 | 2 | 7 | 30, 150, 300 |
| 7/16 | 14 | **ABRH716** | 0.437 | 0.457 | - | 0.675 | 2.25 | 8 | 30, 150, 300 |
| 1/2 | 16 | **ABRH050** | 0.625 | 0.645 | 0.860 | 0.920 | 3 | 16 | 30, 150, 300 |
| 3/4 | 21 | **ABRH075** | 0.812 | 0.835 | 1.045 | 1.105 | 4 | 18 | 30, 150, 300 |
| 1 | 27 | **ABRH100** | 1.000 | 1.040 | 1.300 | 1.380 | 5 | 35 | 15, 120 |
| 1-1/4 | 35 | **ABRH125** | 1.250 | 1.300 | 1.550 | 1.630 | 6.2 | 43 | 15, 120 |
| 1-1/2 | 41 | **ABRH150** | 1.500 | 1.575 | 1.850 | 1.950 | 7.5 | 55 | 8, 15, 30 |
| 2 | 53 | **ABRH200** | 2.000 | 2.080 | 2.350 | 2.454 | 10 | 73 | 8, 15 |
| 2-1/2 | 63 | **ABRH250** | 2.500 | 2.700 | 2.860 | 3.060 | 12.5 | 90 | 8, 15 |
| 3 | 78 | **ABRH300** | 3.000 | 3.200 | 3.360 | 3.560 | 15 | 107 | 8, 15 |
| 4 | 103 | **ABRH400** | 4.000 | - | 4.360 | 4.560 | 20 | 142 | 8, 15 |

### TYPE - ABRH
This non-jacketed flexible aluminum conduit has many universal wiring applications.

### Construction
Type ABRH is formed from a heavy gauge aluminum strip. Its profile and helical shape allow it to withstand substantial impact and crushing forces.

### Applications
This conduit is intended as a metal raceway for wires and cable where CSA Certification is required. Suitable for use with connectors intended for "FMC (Flexible Metal Conduit).

### Certified
File # LL 18858 Conforms to CSA 22.2 No. 56 for use per the Canadian Electrical Code C22.1 Section 12-1300.

# Rigid PVC Conduit Pipe & Fittings

A system for residential, industrial, commercial and institutional applications.







ROYAL® Electrical Solutions

ROYAL Electrical Solutions

# Table of Contents




| | |
|---|---|
| Product Description - Features and Benefits | 1 |
| Installation Guidelines - Solvent Welding Joints | 2 |
| Solvent Welding Joints/Pipe Dimensions/Specs | 3 |
| Solvent Cementing | 4 |
| Expansion and Contraction | 5 |
| Setting the Piston Opening | 6 |
| Fittings - Bends (Bell End) | 7-8 |
| Fittings - Miscellaneous | 9-18 |


**Note:** This brochure is not intended to assume the authority of the Design Engineer. Actual jobsite conditions will vary significantly. The sole responsibility for all design and installation decisions lies with the Design Engineer. All local health and safety regulations must be followed.

# Rigid PVC Conduit Pipe & Fittings

A system for residential, industrial, commercial and institutional applications.

### Product Description & Applications

Royal Building Products® Electrical Solutions manufactures a complete line of Rigid PVC Conduit pipe and fittings for electrical applications. Our products are designed to reduce labour and maintenance costs, while offering superior performance.

Products are certified by the Canadian Standards Association (CSA) and Underwriters Laboratories (UL) for use in above and below ground applications. Our Rigid PVC conduit pipe and fittings are available in 12 to 150mm (½- to 6-inch) diameters and 3- or 6-metre (10- or 20-foot) lengths.

### Standards and Codes

Royal Electrical Solutions Rigid PVC Conduit pipe and fittings are certified to CSA Standards as noted below. Our Rigid PVC conduit pipe and fittings shall be installed according to the Canadian Electrical Code (CEC) Part I, Rules 12-1100 - 12-1122 and the National Electrical Code (NEC) Article 352.

| Pipe | Fittings |
|---|---|
| C22.2 No. 211.2 | C22.2<br>No. 18.2, 85 (Boxes)<br>No. 40 (Electrical Encl.)<br>No. 42.1 (Covers)<br>No. 85 (Fittings) |
| UL 651 | UL 514C (Boxes)<br>UL 50 (Electrical Encl.)<br>UL 514D (Covers)<br>UL 651 (Fittings) |
| Conforms to NEMA TC2 | |





### Features and Benefits

#### Saves Labour

Rigid PVC Conduit pipe and fittings are easy to install, cut and join.

#### Easy Wire Pulls

The conduit's smooth interior surface reduces friction and prevents damage to wires when pulling wire and conductors for long runs and even through 90° bends.

#### Lightweight Materials

Rigid PVC Conduit is easier to move and handle because it is approximately one-fifth the weight of steel and half the weight of aluminum.

**Approximate Weight Comparison**

| Size mm (in) | PVC lb/100ft (kg/m) | Aluminum lb/100ft (kg/m) | Steel lb/100ft (kg/m) |
|---|---|---|---|
| 12 (½) | 16.1 (0.24) | 27 (0.40) | 79 (1.20) |
| 19 (¾) | 21.5 (0.32) | 37 (0.55) | 105 (1.55) |
| 25 (1) | 31.9 (0.47) | 53 (0.80) | 153 (2.30) |
| 32 (1¼) | 43.8 (0.65) | 70 (1.05) | 201 (3.00) |
| 38 (1½) | 52.3 (0.78) | 86 (1.30) | 249 (3.70) |
| 50 (2) | 70.3 (1.05) | 116 (1.75) | 334 (5.00) |
| 63 (2½) | 112.0 (1.61) | 183 (2.75) | 527 (7.85) |
| 75 (3) | 146.7 (2.18) | 239 (3.55) | 690 (10.25) |
| 90 (3½) | 176.4 (2.63) | 288 (4.30) | 831 (12.40) |
| 100 (4) | 208.9 (3.11) | 340 (5.10) | 982 (14.60) |
| 125 (5) | 283.4 (4.22) | 465 (6.90) | 1,344 (20.40) |
| 150 (6) | 368.0 (5.48) | 613 (9.10) | 1,771 (26.35) |

#### Simplifies Direct Burial

Royal Electrical Solutions Rigid PVC Conduit does not require additional protection for direct burial installations according to the Canadian Electrical Code (CEC) and the National Electrical Code (NEC). Normal construction practices should be followed for trenching and backfill operations.

#### Non-Conductive

Rigid PVC Conduit is non-conductive.

#### Long Life

Royal Rigid PVC Conduit and fittings resist acids, alkalis, salt solutions and most other chemicals. (Refer to the Royal Chemical Resistance Guide for detailed information.) There is no risk of corrosion when exposed to naturally corrosive soil conditions, electrochemical or galvanic environments. Royal's Rigid PVC Conduit has achieved sunlight resistance as per the requirements of the Electrical Code.

#### FT-4 Rating

Rigid PVC Conduit pipe has an FT-4 Rating and can be used in non-combustible construction as per Part 3 of the National Building Code of Canada (NBC).

## Installation Guidelines

### Cutting

Royal Rigid PVC Conduit can easily be cut with a hacksaw, a fine-toothed handsaw or PVC conduit cutters. For conduit with more than a 50mm (2-inch) diameter, use a mitre box or saw guide to ensure a square cut. Deburr the end using a knife or file.

### Bending

It may be necessary to create bends in the field by heating and deforming Rigid PVC Conduit. To accomplish this, the following guidelines should be followed:

• For heating the Rigid PVC Conduit, use a heat gun or some other flameless heat source. Do not use an open flame to heat the conduit. Rigid PVC Conduit must be heated to approximately 127°C (260°F) in order to bend without kinking.

• Heat a length of conduit equal to approximately 10 times the nominal diameter.

• Once the Rigid PVC Conduit has been adequately heated, bend it to the required angle plus 3 extra degrees. The additional angle will accommodate the "spring back" which will occur during cooling.

• After bending of the conduit is completed, immediately cool the bend using water or cold air.

• According to the Canadian Electrical Code (CEC) and the National Electrical Code (NEC), the minimum bending radius for rigid conduit is as shown in the table below.

| Nominal Size mm (in) | Min. Radius to Centre of Conduit or Tubing mm (in) |
|---|---|
| 16 (½) | 102 (4.016) |
| 21 (¾) | 114 (4.489) |
| 27 (1) | 146 (5.748) |
| 35 (1¼) | 184 (7.244) |
| 41 (1½) | 210 (8.268) |
| 53 (2) | 241 (9.488) |
| 63 (2½) | 267 (10.512) |
| 78 (3) | 330 (12.992) |
| 91 (3½) | 381 (14.606) |
| 103 (4) | 406 (15.984) |
| 129 (5) | 610 (24.016) |
| 155 (6) | 762 (30.000) |





### Procedure for Solvent Welding Joints

• Use solvent cement and primer prior to expiration date marked on container.
• Above 0° C ambient temperature, joints may be assembled without the use of primer, provided adequate penetration and softening of the pipe/fitting surface can be achieved with solvent cement alone.

1. Assemble materials for the job, including correct solvent cement, primer and correctly sized applicator.

2. Cut pipe as square as possible using a hand saw and miter box or mechanical saw. Do not use a diagonal cut, as it reduces the bonding area in the joint.

3. If plastic tubing cutters are used, care must be taken to remove any raised bead at the end of the pipe, caused by cutting. A file or reamer may be used to remove the bead.

4. Use a knife, file or reamer to remove burrs from the inside and outside of the pipe end, as these will hinder the integrity of the joint. All sharp edges should be removed from the inside and outside edges of the pipe to prevent the pipe from pushing the solvent cement into the fitting socket, thereby causing a weak spot to form. The pipe end should be chamfered, as shown below.

**Chamfered Pipe**

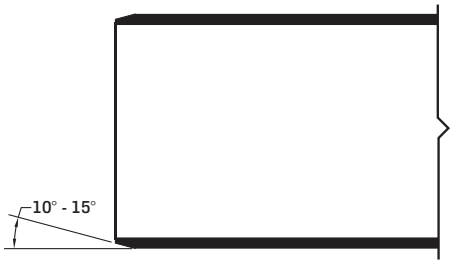

**Procedure for Solvent Welding Joints Continued**

5. All dirt, grease and moisture should be removed from the pipe and socket by thoroughly wiping with a clean, dry cloth.

6. Dry fit pipe and fitting joints prior to cementing. For proper interference fit, the pipe should go easily into the socket approximately ⅓ to ⅔ of the socket depth. If this is not the case, other pipe or fittings should be used.

7. The applicator should be sized according to the size of pipe and fittings being joined. The brush width of the applicator should be equal to approximately ½ of the pipe diameter.

8. Primer is used to penetrate and soften the surfaces so that they will fuse together under a wide variety of conditions. The penetration or softening can be checked by dragging the edge of a knife or sharp object over the coated surface. If a few thousandths of an inch of the primed surface can be scratched or scraped away, proper penetration has occurred. Varying weather conditions affect priming and cementing action and may require more time or repeated applications to either or both surfaces.

9. If using primer, use the correct applicator size (see #7) and aggressively work the primer into the socket, keeping the surface and applicator wet until the surface has softened, re-dipping the applicator as required. When the surface is primed, remove any puddles of primer from the socket.

10. Aggressively work the primer on to the end of the pipe, to a point ½" beyond the depth of the socket.

11. Perform a second application of primer in the socket.

12. While the surfaces are still wet, the appropriate solvent cement should be applied.

13. Using the correct applicator size, aggressively work a full, even layer of cement onto the pipe end to a point equal to the depth of the socket. Do not brush out to a thin paint type layer, as this will dry within a few seconds.

14. Aggressively work a medium layer of cement into the fitting socket; avoid puddling cement in the socket. On the pipe end, do not coat beyond the socket depth or allow cement to run down into the pipe beyond the socket.

15. Apply a second full, even layer of cement on the pipe.

16. Immediately, while the cement is still wet, assemble the joint. Use enough force to ensure that the pipe is fully inserted into the socket. Twist the pipe a ¼ turn as it is being inserted.

17. Hold the joint together for approximately 30 seconds to avoid push out.

18. After assembly, inspect the joint to ensure that there is a ring or bead of cement completely around the juncture of the pipe and socket. If there are voids in this ring, sufficient cement was not applied and the joint may be defective.

19. Remove the excess cement from the pipe and socket (including the ring or bead) using a cloth. Avoid disturbing or moving the joint.

20. Handle newly cemented joints with care until initial set has taken place. Follow set and cure times before handling or testing the system.

**Pipe Dimensions**

| Nominal Size mm (in) | Avg. Outside Diameter mm (in) | Avg. Inside Diameter mm (in) | Avg. Wall Thickness mm (in) | Approx. Weight lb/100ft (kg/m) |
|---|---|---|---|---|
| 12 (½) | 21 (0.840) | 15 (0.608) | 3 (0.116) | 16.1 (0.24) |
| 19 (¾) | 27 (1.050) | 21 (0.810) | 3 (0.120) | 21.5 (0.32) |
| 25 (1) | 33 (1.315) | 26 (1.033) | 4 (0.141) | 31.9 (0.47) |
| 32 (1¼) | 42 (1.660) | 35 (1.362) | 4 (0.149) | 43.8 (0.65) |
| 38 (1½) | 48 (1.900) | 40 (1.592) | 4 (0.154) | 52.3 (0.78) |
| 50 (2) | 60 (2.375) | 52 (2.049) | 4 (0.163) | 70.3 (1.05) |
| 63 (2½) | 73 (2.875) | 62 (2.445) | 5 (0.215) | 112.0 (1.61) |
| 75 (3) | 89 (3.500) | 77 (3.042) | 6 (0.229) | 146.7 (2.18) |
| 90 (3½) | 102 (4.000) | 89 (3.520) | 6 (0.240) | 176.4 (2.63) |
| 100 (4) | 114 (4.500) | 102 (3.998) | 6 (0.251) | 208.9 (3.11) |
| 125 (5) | 141 (5.565) | 127 (5.017) | 7 (0.274) | 283.4 (4.22) |
| 150 (6) | 168 (6.625) | 153 (6.031) | 8 (0.297) | 368.0 (5.48) |

**Specification**

All wiring shall be installed in Royal Electrical Solutions Rigid PVC Conduit and secured with proper fittings. All conduit and fittings shall be manufactured by Royal Building Products, Pipe & Fittings Solutions. All outlets, pull boxes and junction points shall be Royal products.

Exposed conduit shall be securely attached and supported with straps that are installed at the recommended spacing specified in CEC Section 12-1114. The straps must allow for linear expansion and contraction of the conduit due to temperature change. If the variance in temperature exceeds 14°C (25°F), expansion joints shall be installed according to the manufacturer's recommendations.

If Rigid PVC Conduit is embedded in concrete or direct buried, support straps are not required.

### Solvent Cementing

All connections should be made using and applying Royal Electrical Solutions solvent cement.

### Set Times

| Average Initial Set Times | | | |
|---|---|---|---|
| Temperature Range | Pipe Sizes ½" to 1¼" | Pipe Sizes 1½" to 2" | Pipe Sizes 2½" to 6" |
| 15°C to 40°C | 2 min. | 5 min. | 30 min. |
| 5°C to 15°C | 5 min. | 10 min. | 2 hrs. |
| -16°C to 5°C | 10 min. | 15 min. | 12 hrs. |

### Joint Cure Schedule

| Average Joint Cure Times | | | |
|---|---|---|---|
| Temperature Range During Assembly & Cure Periods | Pipe Sizes ½" to 1¼" | Pipe Sizes 1½" to 2" | Pipe Sizes 2½" to 6" |
| 15°C to 40°C | 2 min. | 5 min. | 30 min. |
| 5°C to 15°C | 5 min. | 10 min. | 2 hrs. |
| -16°C to 5°C | 10 min. | 15 min. | 12 hrs. |

In damp or humid weather allow 50% more cure time.

### Estimated Solvent Cement Requirements

| Average Number of Joints per Litre of Solvent Cement | | | | | | | | | |
|---|---|---|---|---|---|---|---|---|---|
| Pipe/Fitting Diameter | ½" | ¾" | 1" | 1½" | 2" | 2½" | 3" | 4" | 6" |
| Number of Joints | 300 | 200 | 125 | 90 | 60 | 40 | 40 | 30 | 10 |

### Estimated Primer Requirements

| Average Number of Joints per Litre of Primer | | | | | | | | | |
|---|---|---|---|---|---|---|---|---|---|
| Pipe/Fitting Diameter | ½" | ¾" | 1" | 1½" | 2" | 2½" | 3" | 4" | 6" |
| Number of Joints | 600 | 400 | 250 | 180 | 120 | 80 | 80 | 60 | 20 |

### Solvent Cementing in Cold Weather:

- Store pipe and fittings in a heated area. Prefabricate as much of the system as possible in a heated area.
- When not in use, store sealed solvent cement and primer between 5°C and 21°C. Do not use open flame or electric heaters to warm cements and primers.
- Take care to remove moisture, ice and snow from the mating surfaces.

### Solvent Cementing in Hot Weather:

- At the time of assembly, the surface temperature of the mating surfaces should not exceed 45°C. Shade or shelter the joint surfaces from direct sunlight for at least 1 hour prior to joining and during the joining process. If necessary, swab the mating surfaces with clean, wet rags to reduce the surface temperature (thoroughly dry surfaces before applying primer or cement).
- Make joints during the cooler early morning hours.
- Apply cement quickly and join pipe to fitting as quickly as possible after applying the cement.
- Keep solvent cement container closed or covered when not in use, to minimize solvent loss.

### Solvent Cementing in Wet Conditions:

- Mating surfaces must be dry when the joint is made.
- Work under a cover or canopy to keep rain off pipe and fittings.
- Work quickly after drying the pipe and fitting to avoid condensation.
- Allow a longer cure time before the system is tested or used.

### Storage and Handling of Solvent Cement and Primer:

- Solvent cement and primer contain highly flammable solvents. Follow all specific safety precautions provided on container label and Material Safety Data Sheet.
- Keep primer and solvent cement away from heat, sparks and open flame.
- Keep containers tightly closed except when in use.
- Ensure proper ventilation of work area and avoid inhaling solvent vapours.
- Where the possibility of splashing exists, wear proper eye protection or a face shield.
- Avoid contact with skin.

### Support Straps

Rigid PVC conduit must be supported with straps when installed in above ground applications. These straps should be installed snugly, while allowing linear movement of the conduit. See the table below for recommended maximum spacing of support straps.

| Maximum Recommended Spacing of Support Straps | | |
|---|---|---|
| Nominal Size mm (in) | CEC Recommended Spacing ft (m) | NEC Recommended Spacing ft (m) |
| 16 (½) | 2½ (0.75) | 3 (0.91) |
| 21 (¾) | 2½ (0.75) | 3 (0.91) |
| 27 (1) | 2½ (0.75) | 3 (0.91) |
| 35 (1¼) | 4 (1.20) | 5 (1.50) |
| 41 (1½) | 4 (1.20) | 5 (1.50) |
| 53 (2) | 6 (1.80) | 5 (1.50) |
| 63 (2½) | 6 (1.80) | 3 - 6 (1.80) |
| 78 (3)-129 (5) | 7 (2.10) | 3½ - 5 (2.10) |
| 155 (6) | 8 (2.50) | 8 (2.50) |

### Storing Conduit Pipe and Fittings

Store Rigid PVC conduit pipe and fittings at the same temperature. Otherwise they may expand and contract at different rates and become incompatible.

### Maximum Operating Temperatures

According to the Canadian Electrical Code (CEC), Rigid PVC conduit is intended for use at a continuous operating temperature of 75°C (167°F). For US applications, our Rigid PVC conduit is rated for use with 90°C wiring, according to the requirements of the NEC.

### Ambient Temperatures

Royal Electrical Solutions Rigid PVC Conduit and fittings can be installed in locations with an ambient temperature not exceeding 50°C (122°F).

### Expansion Joints

According to the CEC, if the amount of expansion expected due to temperature variance during and after construction is more than 45mm, expansion joints must be used.

### Expected Expansion

The coefficient of linear expansion for Rigid PVC conduit is as follows:

$3 \times 10^{-5}$ in (expansion/contraction) / in (pipe length) /°F (change in temperature),

$5.4 \times 10^{-5}$ mm (expansion/contraction)/mm (pipe length)/°C (change in temperature)





### Note:

The following chart shows the amount of expansion expected with various pipe lengths/temperature changes. If the Rigid PVC Conduit is installed in an exposed location, 17°C (30°F) should be added to the amount of temperature change (ΔT) due to the effects of radiant heat.

**Expansion/Contraction of PVC (mm)**

**Length of Pipe Run (m)**

| ΔT (°C) | 2 | 4 | 6 | 8 | 10 | 12 | 14 | 16 | 18 | 20 |
|---|---|---|---|---|---|---|---|---|---|---|
| 5 | 0.54 | 1.08 | 1.62 | 2.16 | 2.70 | 3.24 | 3.78 | 4.32 | 4.86 | 5.40 |
| 10 | 1.08 | 2.16 | 3.24 | 4.32 | 5.40 | 6.48 | 7.56 | 8.64 | 9.72 | 10.80 |
| 15 | 1.62 | 3.24 | 4.86 | 6.48 | 8.10 | 9.72 | 11.34 | 12.96 | 14.58 | 16.20 |
| 20 | 2.16 | 4.32 | 6.48 | 8.64 | 10.80 | 12.96 | 15.12 | 17.28 | 19.44 | 21.60 |
| 25 | 2.70 | 5.40 | 8.10 | 10.80 | 13.50 | 16.20 | 18.90 | 21.60 | 24.30 | 27.00 |
| 30 | 3.24 | 6.48 | 9.72 | 12.96 | 16.20 | 19.44 | 22.68 | 25.92 | 29.16 | 32.40 |
| 35 | 3.78 | 7.56 | 11.34 | 15.12 | 18.90 | 22.68 | 26.46 | 30.24 | 34.02 | 37.80 |
| 40 | 4.32 | 8.64 | 12.96 | 17.28 | 21.60 | 25.92 | 30.24 | 34.56 | 38.88 | 43.20 |
| 45 | 4.86 | 9.72 | 14.58 | 19.44 | 24.30 | 29.16 | 34.02 | 38.88 | 43.74 | 48.60 |
| 50 | 5.40 | 10.80 | 16.20 | 21.60 | 27.00 | 32.40 | 37.80 | 43.20 | 48.60 | 54.00 |

**Expansion/Contraction of PVC (in)**

**Length of Pipe Run (ft)**

| ΔT (°F) | 5 | 10 | 15 | 20 | 25 | 30 | 35 | 40 | 45 | 50 |
|---|---|---|---|---|---|---|---|---|---|---|
| 5 | 0.01 | 0.02 | 0.03 | 0.04 | 0.05 | 0.05 | 0.06 | 0.07 | 0.08 | 0.09 |
| 10 | 0.02 | 0.04 | 0.05 | 0.07 | 0.09 | 0.11 | 0.13 | 0.14 | 0.16 | 0.18 |
| 15 | 0.03 | 0.05 | 0.08 | 0.11 | 0.14 | 0.16 | 0.19 | 0.22 | 0.24 | 0.27 |
| 20 | 0.04 | 0.07 | 0.11 | 0.14 | 0.18 | 0.22 | 0.25 | 0.29 | 0.32 | 0.36 |
| 25 | 0.05 | 0.09 | 0.14 | 0.18 | 0.23 | 0.27 | 0.32 | 0.36 | 0.41 | 0.45 |
| 30 | 0.05 | 0.11 | 0.16 | 0.22 | 0.27 | 0.32 | 0.38 | 0.43 | 0.49 | 0.54 |
| 35 | 0.06 | 0.13 | 0.19 | 0.25 | 0.32 | 0.38 | 0.44 | 0.50 | 0.57 | 0.63 |
| 40 | 0.07 | 0.14 | 0.22 | 0.29 | 0.36 | 0.43 | 0.50 | 0.58 | 0.65 | 0.72 |
| 45 | 0.08 | 0.16 | 0.24 | 0.32 | 0.41 | 0.49 | 0.57 | 0.65 | 0.73 | 0.81 |
| 50 | 0.09 | 0.18 | 0.27 | 0.36 | 0.45 | 0.54 | 0.63 | 0.72 | 0.81 | 0.90 |

### Required Number of Expansion Joints

The following table shows the amount of travel that is available with each trade size of Royal Electrical Solutions Rigid PVC conduit expansion joints:

| Part Number | Description in | Travel Allowance mm (in) |
|---|---|---|
| REJ10 | ½" Expansion Joint | 102 (4) |
| REJ15 | ¾" Expansion Joint | 102 (4) |
| REJ20 | 1" Expansion Joint | 102 (4) |
| REJ25 | 1¼" Expansion Joint | 102 (4) |
| REJ30 | 1½" Expansion Joint | 102 (4) |
| REJ35 | 2" Expansion Joint | 102 (4) |
| REJ40 | 2½" Expansion Joint | 102 (4) |
| REJ45 | 3" Expansion Joint | 204 (8) |
| REJ50 | 3½" Expansion Joint | 204 (8) |
| REJ55 | 4" Expansion Joint | 204 (8) |
| REJ60 | 5" Expansion Joint | 204 (8) |
| REJ65 | 6" Expansion Joint | 204 (8) |

The required number of expansion joints can be calculated using the following formula:

$$\#\ \text{Expansion Joints Required} = \frac{\text{Total Expected Amount of Expansion (in)}}{\text{Expansion Joint Travel Allowance (in)}}$$

$$\#\ \text{Expansion Joints Required} = \frac{\text{Total Expected Amount of Expansion (mm)}}{\text{Expansion Joint Travel Allowance (mm)}}$$

The number of expansion joints calculated above should be rounded up to the nearest whole number.

### Setting the Piston Opening

Expansion joints must be installed such that they allow for both expansion and contraction of the conduit. The piston of the expansion joint must be set at the correct position to allow for this linear movement. To determine the correct position for the piston at the time and temperature of installation, the following formula should be used:

$$\text{Piston Setting (in)} = \frac{\text{(Max. Temp. (°F) – Install. Temp. (°F))}}{\text{Total Expected Temperature Change (°F)}} \times \left[\text{Expansion Joint Expansion Allow. (in)}\right]$$

$$\text{Piston Setting (mm)} = \frac{\text{(Max. Temp. (°C) – Install. Temp. (°C))}}{\text{Total Expected Temperature Change (°C)}} \times \left[\text{Expansion Joint Expansion Allow. (mm)}\right]$$

### Installation Guidelines

• Securely fasten the expansion joint barrel so that it does not shift. Loosely connect the conduit so that it is free to move.

• To function properly, expansion joints should be installed near a fixed point.

• It is better to use more expansion joints than not enough, since problems are difficult to correct after conductors and wires have been pulled through the conduit.

• Ensure that the barrel and piston are aligned and level.

• For vertical installations of expansion joints, install with the piston at the bottom to prevent dirt and water from getting inside the joint and causing it to malfunction.

### Installation Example

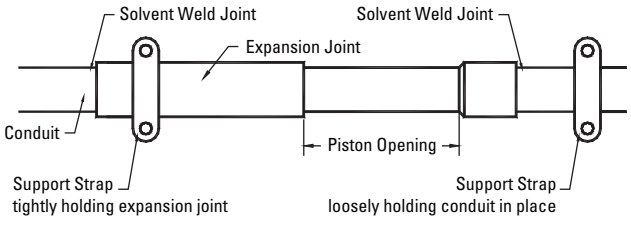


**If one expansion joint is required:**
Securely fasten the barrel of the expansion joint close to one of the boxes. Support the conduit with straps, but allow free movement of the conduit for expansion and contraction. (See Drawing 1)

**If two expansion joints are required:**
**There are two options available:**

1. Firmly fasten one expansion joint near each end of the run and firmly fasten the conduit at the centre. Support the rest of the conduit with straps allowing for movement of the conduit. (See Drawing 2)

2. Firmly fasten the expansion joints back-to-back at the centre of the run. The conduit should be supported with straps to allow free movements as it expands and contracts. (See Drawing 3)

**If three or more expansion joints are required:**
Evenly space the expansion joints along the run of Rigid PVC conduit. Tightly fasten each expansion joint and support the conduit with straps. Do not restrict the movement of the conduit.

*For information on Maximum Recommended Spacing of Support Straps, see page 4.

### Drawings 1 - 4

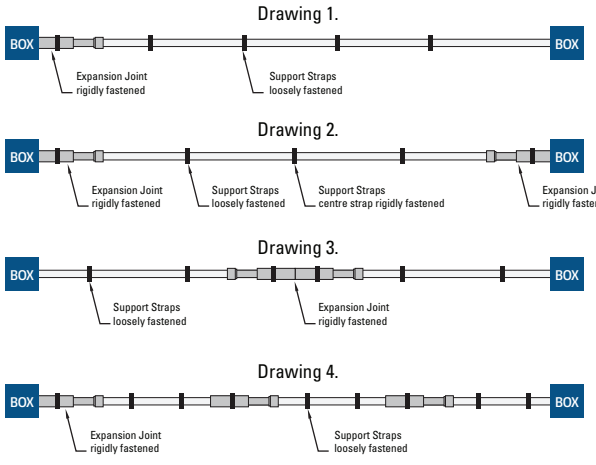

FITTINGS - Bends (Bell Ends)

| 90° Elbows - Bell End | Sizes (in) | Product Code | UPC Number | Diameter (D) (in) | Length (L) (in) | Radius (R) (in) |
|---|---|---|---|---|---|---|
| 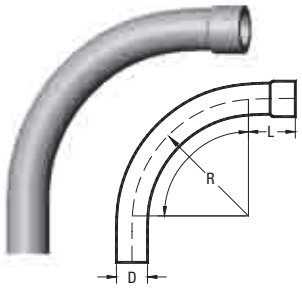 | ½ | REE1090 | 46120 | 0.840 | 1.500 | 4.00 |
| | ¾ | REE1590 | 46150 | 1.050 | 1.500 | 4.50 |
| | 1 | REE2090 | 46180 | 1.315 | 1.875 | 5.75 |
| | 1¼ | REE2590 | 46210 | 1.660 | 2.000 | 7.25 |
| | 1½ | REE3090 | 46240 | 1.900 | 2.000 | 8.25 |
| | 2 | REE3590 | 46270 | 2.375 | 2.000 | 9.50 |
| | 2½ | REE4090 | 46330 | 2.875 | 3.000 | 10.50 |
| | 3 | REE4590 | 46360 | 3.500 | 3.125 | 13.00 |
| | 3½ | REE5090 | 46390 | 4.000 | 3.250 | 15.00 |
| | 4 | REE5590 | 46420 | 4.500 | 3.375 | 16.00 |
| | 5 | REE6090 | 46440 | 5.565 | 3.622 | 24.00 |
| | 6 | REE6590 | 46460 | 6.625 | 3.740 | 30.00 |

| 45° Elbows - Bell End | Sizes (in) | Product Code | UPC Number | Diameter (D) (in) | Length (L) (in) | Radius (R) (in) |
|---|---|---|---|---|---|---|
| 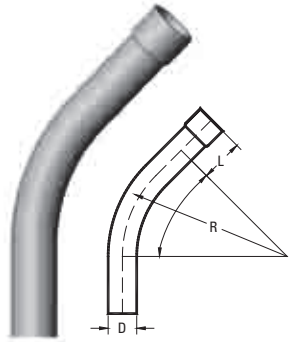 | ½ | REE1045 | 46120 | 0.840 | 1.500 | 4.00 |
| | ¾ | REE1545 | 46150 | 1.050 | 1.500 | 4.50 |
| | 1 | REE2045 | 46180 | 1.315 | 1.875 | 5.75 |
| | 1¼ | REE2545 | 46210 | 1.660 | 2.000 | 7.25 |
| | 1½ | REE3045 | 46240 | 1.900 | 2.000 | 8.25 |
| | 2 | REE3545 | 46270 | 2.375 | 2.000 | 9.50 |
| | 2½ | REE4045 | 46330 | 2.875 | 3.000 | 10.50 |
| | 3 | REE4545 | 46360 | 3.500 | 3.125 | 13.00 |
| | 3½ | REE5045 | 46390 | 4.000 | 3.250 | 15.00 |
| | 4 | REE5545 | 46420 | 4.500 | 3.375 | 16.00 |
| | 5 | REE6045 | 46440 | 5.565 | 3.625 | 24.00 |
| | 6 | REE6545 | 46460 | 6.625 | 3.750 | 30.00 |

| 30° Elbows - Bell End | Sizes (in) | Product Code | UPC Number | Diameter (D) (in) | Length (L) (in) | Radius (R) (in) |
|---|---|---|---|---|---|---|
| 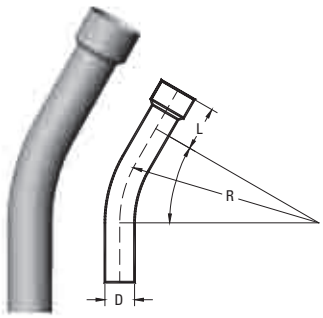 | ½ | REE1030 | 46100 | 0.840 | 1.500 | 4.00 |
| | ¾ | REE1530 | 46130 | 1.050 | 1.500 | 4.50 |
| | 1 | REE2030 | 46160 | 1.315 | 1.875 | 5.75 |
| | 1¼ | REE2530 | 46190 | 1.660 | 2.000 | 7.25 |
| | 1½ | REE3030 | 46220 | 1.900 | 2.000 | 8.25 |
| | 2 | REE3530 | 46274 | 2.375 | 2.000 | 9.50 |
| | 2½ | REE4030 | 46310 | 2.875 | 3.000 | 10.50 |
| | 3 | REE4530 | 46340 | 3.500 | 3.125 | 13.00 |
| | 3½ | REE5030 | 46375 | 4.000 | 3.250 | 15.00 |
| | 4 | REE5530 | 46400 | 4.500 | 3.375 | 16.00 |
| | 5 | REE6030 | 46425 | 5.565 | 3.625 | 24.00 |
| | 6 | REE6530 | 46442 | 6.625 | 3.750 | 30.00 |

| Utilities 90° Elbows - Bell End | Sizes (in) | Product Code | UPC Number | Diameter (D) (in) | Length (L) (in) | Radius (R) (in) |
|---|---|---|---|---|---|---|
| 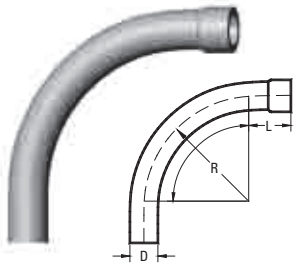 | 2 | REE2-24 | 46501 | 2.375 | 41.20 | 24.00 |
| | 2 | REE2-36 | 46502 | 2.375 | 31.70 | 36.00 |
| | 3 | REE3-24 | 46503 | 3.500 | 41.20 | 24.00 |
| | 3 | REE3-36 | 46504 | 3.500 | 31.70 | 36.00 |
| | 4 | REE4-36 | 46465 | 4.500 | 31.70 | 36.00 |
| | 4 | REE4-48 | 46505 | 4.500 | 31.70 | 48.00 |
| | 5 | REE5-36 | 46506 | 5.565 | 31.70 | 36.00 |
| | 6 | REE6-36 | 46507 | 6.625 | 31.70 | 36.00 |

Fittings - Bends (Plain Ends)

| 90° Elbows - Plain End | Sizes (in) | Product Code | UPC Number | Diameter (D) (in) | Length (L) (in) | Radius (R) (in) |
|---|---|---|---|---|---|---|
| 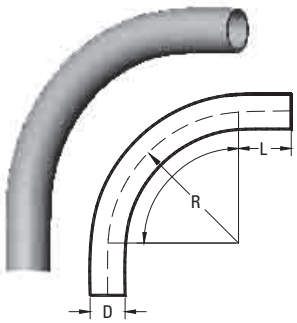 | ½ | REE1090PE | 46120 | 0.840 | 1.500 | 4.00 |
| | ¾ | REE1590PE | 46150 | 1.050 | 1.500 | 4.50 |
| | 1 | REE2090PE | 46180 | 1.315 | 1.875 | 5.75 |
| | 1¼ | REE2590PE | 46210 | 1.660 | 2.000 | 7.25 |
| | 1½ | REE3090PE | 46240 | 1.900 | 2.000 | 8.25 |
| | 2 | REE3590PE | 46270 | 2.375 | 2.000 | 9.50 |
| | 2½ | REE4090PE | 46330 | 2.875 | 3.000 | 10.50 |
| | 3 | REE4590PE | 46360 | 3.500 | 3.125 | 13.00 |
| | 3½ | REE5090PE | 46390 | 4.000 | 3.250 | 15.00 |
| | 4 | REE5590PE | 46420 | 4.500 | 3.375 | 16.00 |
| | 5 | REE6090PE | 46440 | 5.565 | 3.622 | 24.00 |
| | 6 | REE6590PE | 46460 | 6.625 | 3.740 | 30.00 |

| 45° Elbows - Plain End | Sizes (in) | Product Code | UPC Number | Diameter (D) (in) | Length (L) (in) | Radius (R) (in) |
|---|---|---|---|---|---|---|
| 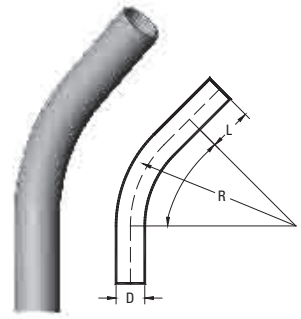 | ½ | REE1045PE | 46110 | 0.840 | 1.500 | 4.00 |
| | ¾ | REE1545PE | 46140 | 1.050 | 1.500 | 4.50 |
| | 1 | REE2045PE | 46170 | 1.315 | 1.875 | 5.75 |
| | 1¼ | REE2545PE | 46200 | 1.660 | 2.000 | 7.25 |
| | 1½ | REE3045PE | 46230 | 1.900 | 2.000 | 8.25 |
| | 2 | REE3545PE | 46280 | 2.375 | 2.000 | 9.50 |
| | 2½ | REE4045PE | 46320 | 2.875 | 3.000 | 10.50 |
| | 3 | REE4545PE | 46350 | 3.500 | 3.125 | 13.00 |
| | 3½ | REE5045PE | 46380 | 4.000 | 3.250 | 15.00 |
| | 4 | REE5545PE | 46415 | 4.500 | 3.375 | 16.00 |
| | 5 | REE6045PE | 46430 | 5.565 | 3.622 | 24.00 |
| | 6 | REE6545PE | 46450 | 6.625 | 3.740 | 30.00 |

| 30° Elbows - Plain End | Sizes (in) | Product Code | UPC Number | Diameter (D) (in) | Length (L) (in) | Radius (R) (in) |
|---|---|---|---|---|---|---|
| 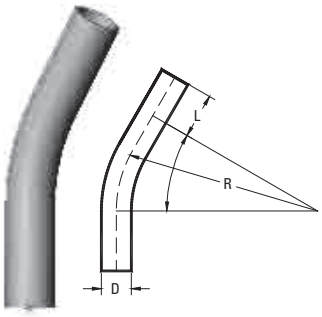 | ½ | REE1030PE | 46100 | 0.840 | 1.500 | 4.00 |
| | ¾ | REE1530PE | 46130 | 1.050 | 1.500 | 4.50 |
| | 1 | REE2030PE | 46160 | 1.315 | 1.875 | 5.75 |
| | 1¼ | REE2530PE | 46190 | 1.660 | 2.000 | 7.25 |
| | 1½ | REE3030PE | 46220 | 1.900 | 2.000 | 8.25 |
| | 2 | REE3530PE | 46274 | 2.375 | 2.000 | 9.50 |
| | 2½ | REE4030PE | 46310 | 2.875 | 3.000 | 10.50 |
| | 3 | REE4530PE | 46340 | 3.500 | 3.125 | 13.00 |
| | 3½ | REE5030PE | 46375 | 4.000 | 3.250 | 15.00 |
| | 4 | REE5530PE | 46400 | 4.500 | 3.375 | 16.00 |
| | 5 | REE6030PE | 46425 | 5.565 | 3.622 | 24.00 |
| | 6 | REE6530PE | 46442 | 6.625 | 3.740 | 30.00 |

| 45° Elbows - Extended Plain End | Sizes (in) | Product Code | UPC Number | Diameter (D) (in) | Length (L) (in) | Radius (R) (in) |
|---|---|---|---|---|---|---|
| 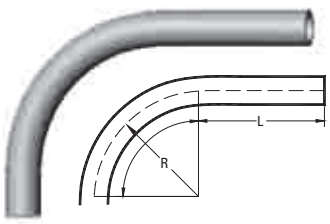 | 1¼ | REE2590E | 46125 | 1.660 | 14.750 | 7.25 |
| | 1½ | REE3090E | 46260 | 1.900 | 14.750 | 8.25 |
| | 2 | REE3590E | 43290 | 2.375 | 14.750 | 9.50 |

## Fittings - Couplings and Adapters

| Couplings | Sizes (in) | Product Code | UPC Number | Outside Diameter (OD) (in) | Inside Diameter (ID) (in) | Length (L) (in) |
|---|---|---|---|---|---|---|
| 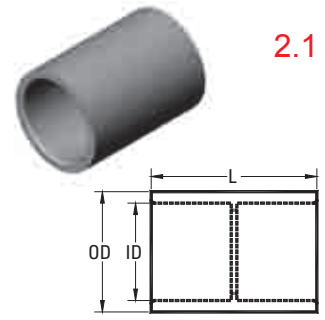 2.1 | ½ | REC10 | 45950 | 1.080 | 0.840 | 1.437 |
| | ¾ | REC15 | 45960 | 1.300 | 1.050 | 1.703 |
| | 1 | REC20 | 45970 | 1.590 | 1.315 | 2.031 |
| | 1¼ | REC25 | 45980 | 2.000 | 1.660 | 2.156 |
| | 1½ | REC30 | 45990 | 2.230 | 1.900 | 2.281 |
| | 2 | REC35 | 46000 | 2.720 | 2.375 | 2.406 |
| | 2½ | REC40 | 46010 | 3.320 | 2.875 | 3.187 |
| | 3 | REC45 | 46020 | 4.000 | 3.500 | 3.437 |
| | 3½ | REC50 | 46030 | 4.500 | 4.000 | 3.625 |
| | 4 | REC55 | 46060 | 5.000 | 4.500 | 3.750 |
| | 5 | REC60 | 46080 | 6.120 | 5.565 | 4.187 |
| | 6 | REC65 | 46090 | 7.370 | 6.625 | 4.562 |

| 5° Couplings *(*Fabricated)* | Sizes (in) | Product Code | UPC Number | Outside Diameter (OD) (in) | Inside Diameter (ID) (in) | Length (L) (in) |
|---|---|---|---|---|---|---|
| 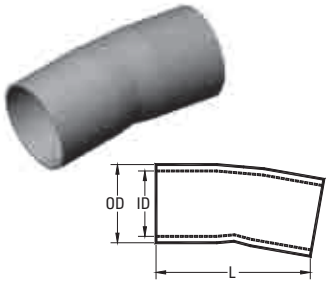 | 2 | R5EC35 | 46800 | 2.375 | 2.049 | 4.0 |
| | 2½ | R5EC40 | 46805 | 3.500 | 2.445 | 5.5 |
| | 3 | R5EC45 | 46810 | 3.500 | 3.042 | 6.0 |
| | 3½ | R5EC50 | 46815 | 4.500 | 3.521 | 7.0 |
| | 4 | R5EC55 | 46820 | 4.500 | 3.998 | 7.0 |
| | 5 | R5EC60 | 46825 | 5.565 | 5.018 | 7.5 |
| | 6 | R5EC65 | 46830 | 6.625 | 6.031 | 11.0 |

| Terminal Adapters (½" - 1¼" Tapered Thread, 6" NPT) | Sizes (in) | Product Code | UPC Number | A (in) | B (in) | Inside Diameter (ID) (in) | Thread (in) |
|---|---|---|---|---|---|---|---|
| 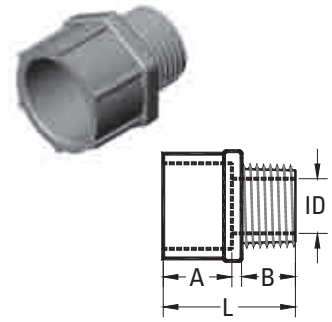 | ½ | RTA10 | 45730 | 0.750 | 0.700 | 0.591 | 1.550 |
| | ¾ | RTA15 | 45740 | 1.000 | 0.675 | 0.790 | 1.750 |
| | 1 | RTA20 | 45750 | 1.115 | 0.625 | 1.000 | 1.860 |
| | 1¼ | RTA25 | 45760 | 1.300 | 0.640 | 1.311 | 2.125 |
| | 1½ | RTA30 | 45770 | 1.425 | 0.725 | 1.530 | 2.250 |
| | 2 | RTA35 | 45780 | 1.150 | 0.800 | 1.970 | 2.100 |
| | 2½ | RTA40 | 45790 | 1.900 | 0.800 | 2.346 | 2.930 |
| | 3 | RTA45 | 45800 | 2.000 | 0.815 | 2.915 | 3.055 |
| | 3½ | RTA50 | 45810 | 1.715 | 1.000 | 3.385 | 3.055 |
| | 4 | RTA55 | 45820 | 1.990 | 0.815 | 3.850 | 3.215 |
| | 5 | RTA60 | 45830 | 2.000 | 1.725 | 5.015 | 5.985 |
| | 6 | RTA65 | 45840 | 2.130 | 1.875 | 6.025 | 6.500 |

| Female Adapters (Npt Tapered Thread) | Sizes (in) | Product Code | UPC Number | A (in) | B (in) | Inside Diameter (ID) (in) | Thread (in) |
|---|---|---|---|---|---|---|---|
| 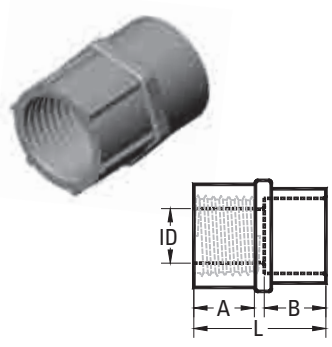 | ½ | RFA10 | 44990 | 0.800 | 0.825 | 0.620 | 1.725 |
| | ¾ | RFA15 | 45000 | 0.800 | 1.000 | 0.820 | 1.900 |
| | 1 | RFA20 | 45010 | 1.000 | 1.200 | 1.065 | 2.300 |
| | 1¼ | RFA25 | 45020 | 1.015 | 1.300 | 1.395 | 2.425 |
| | 1½ | RFA30 | 45030 | 1.050 | 1.290 | 1.575 | 2.440 |
| | 2 | RFA35 | 45040 | 1.075 | 1.375 | 2.050 | 2.550 |
| | 2½ | RFA40 | 45050 | 1.675 | 1.985 | 2.470 | 3.760 |
| | 3 | RFA45 | 45060 | 1.630 | 2.150 | 3.090 | 4.100 |
| | 3½ | RFA50 | 45070 | 1.800 | 2.000 | 3.540 | 3.985 |
| | 4 | RFA55 | 45080 | 1.755 | 2.185 | 4.025 | 4.210 |
| | 5 | RFA60 | 45090 | 2.065 | 3.000 | 5.035 | 5.240 |
| | 6 | RFA65 | 45100 | 2.065 | 3.000 | 6.045 | 5.235 |

Fittings - Expansions Joints, Straps and Meter Accessories

## Expansion Joints

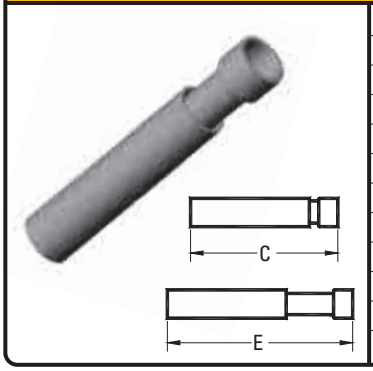


| Sizes (in) | Product Code | UPC Number | Expanded Length (E) (in) | Contracted Length (C) (in) | Travel (in) |
|---|---|---|---|---|---|
| ½ | REJ10 | 44870 | 12.00 | 8.00 | 4.00 |
| ¾ | REJ15 | 44880 | 12.00 | 8.00 | 4.00 |
| 1 | REJ20 | 44890 | 12.50 | 8.50 | 4.00 |
| 1¼ | REJ25 | 44900 | 13.00 | 9.00 | 4.00 |
| 1½ | REJ30 | 44910 | 13.00 | 9.00 | 4.00 |
| 2 | REJ35 | 44920 | 13.25 | 9.25 | 4.00 |
| 2½ | REJ40 | 44930 | 13.25 | 9.25 | 4.00 |
| 3 | REJ45 | 44940 | 22.25 | 14.25 | 8.00 |
| 3½ | REJ50 | 44950 | 22.25 | 14.25 | 8.00 |
| 4 | REJ55 | 44960 | 22.25 | 14.25 | 8.00 |
| 5 | REJ60 | 44963 | 22.25 | 14.25 | 8.00 |
| 6 | REJ65 | 44966 | 22.25 | 14.25 | 8.00 |

## Expansion Joints

**PVC — 2 Hole**



| Sizes (in) | Product No. | UPC No. |
|---|---|---|
| ½ | RPS10 | 45540 |
| ¾ | RPS15 | 45550 |
| 1 | RPS20 | 45560 |
| 1¼ | RPS25 | 45570 |
| 1½ | RPS30 | 45580 |
| 2 | RPS35 | 45590 |

**PVC Coated Steel — 2 Hole**



| Sizes (in) | Product No. | UPC No. |
|---|---|---|
| 2 | RCS35 | 44783 |
| 2½ | RCS40 | 44784 |
| 3 | RCS45 | 44785 |
| 3½ | RCS50 | 44786 |
| 4 | RCS55 | 44787 |
| 5 | RCS60 | 44788 |
| 6 | RCS65 | 44789 |

**PVC Coated Steel — 1 Hole**



| Sizes (in) | Product No. | UPC No. |
|---|---|---|
| ½ | RCS10-1 | 46850 |
| ¾ | RCS15-1 | 46852 |
| 1 | RCS20-1 | 46854 |
| 1¼ | RCS25-1 | 46856 |
| 1½ | RCS30-1 | 46858 |
| 2 | RCS35-1 | 46860 |
| 2½ | RCS40-1 | 46862 |
| 3 | RCS10-1 | 46864 |
| 4 | RCS10-1 | 46866 |

## Meter Offsets



| Sizes (in) | Product No. | UPC No. |
|---|---|---|
| 1¼ | RM025 | 45500 |
| 2 | RM035 | 45510 |

## Meter Hubs



| Sizes (in) | Product No. | UPC No. |
|---|---|---|
| 1¼ | RMHU25 | 45480 |
| 1½ | RMHU30 | 45485 |
| 2 | RMHU35 | 45490 |

## Long Meter Offsets *(Fabricated)*



| Sizes (in) | Product No. | UPC No. |
|---|---|---|
| 1¼ | RLM025 | 45472 |
| 1½ | RML030 | 45474 |
| 2 | RML035 | 45476 |

## Expansion & Deflection Fittings Assembly



| Sizes (in) | Product No. | UPC No. |
|---|---|---|
| 2 | RSEJ35 | 46990 |
| 3 | RSEJ45 | 46992 |
| 4 | RSEJ55 | 46994 |

## Service Entrance Fittings



| Sizes (in) | Product No. | UPC No. |
|---|---|---|
| ½ | REF10 | 44795 |
| ¾ | REF15 | 44800 |
| 1 | REF20 | 44810 |
| 1¼ | REF25 | 44820 |
| 1½ | REF30 | 44830 |
| 2 | REF35 | 44840 |
| 2½ | REF40 | 44842 |
| 3 | REF45 | 44844 |
| 3½ | REF50 | 44852 |
| 4 | REF55 | 44860 |

## Ecovoc Solvent Cement *(*c/w Screw Cap & Dauber)*



| Sizes (in) | Product No. | UPC No. | Carton Qty. |
|---|---|---|---|
| 250ml | RVOC250* | 54790 | 24 |
| 475ml | RVOC475* | 54795 | 12 |
| 950ml | RVOC950* | 54797 | 12 |
| 4L | RVOC4L | 54799 | 4 |

## Privoc Solvent Cement *(*c/w Screw Cap & Dauber)*



| Sizes (in) | Product No. | UPC No. | Carton Qty. |
|---|---|---|---|
| 250ml | RVOCPR250* | 54800 | 24 |
| 475ml | RVOCPR475* | 54802 | 12 |
| 950ml | RVOCPR950* | 54804 | 12 |
| 4L | RVOCPR4L | 54806 | 4 |

## Fittings - Access Fittings

| Type C | Sizes (in) | Product Code | UPC Number | A (in) | B (in) | C (in) | D (in) | E (in) |
|---|---|---|---|---|---|---|---|---|
| 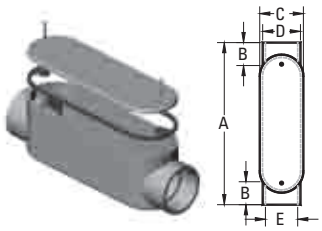 | ½ | RSC10S | 46600 | 5.606 | 0.639 | 1.268 | 1.100 | 0.840 |
| | ¾ | RSC20S | 46605 | 5.606 | 0.810 | 1.536 | 1.325 | 1.050 |
| | 1 | RSC30S | 46610 | 6.500 | 0.910 | 1.700 | 1.600 | 1.335 |
| | 1¼ | RSC40S | 46615 | 7.900 | 1.050 | 2.300 | 2.250 | 1.100 |
| | 1½ | RSC50S | 46620 | 8.500 | 1.125 | 2.675 | 2.250 | 1.900 |
| | 2 | RSC60S | 45605 | 10.875 | 1.160 | 3.188 | 2.820 | 2.375 |
| | 2½ | RSC70S | 45606 | 14.600 | 1.750 | 4.500 | 3.950 | 2.870 |
| | 3 | RSC80S | 45607 | 14.600 | 1.900 | 4.500 | 3.950 | 3.510 |
| | 3½ | RSC90S | 45609 | 17.040 | 2.125 | 5.536 | 5.000 | 4.000 |
| | 4 | RSC100S | 45608 | 17.040 | 2.125 | 5.536 | 5.000 | 4.530 |

| Type LB | Sizes (in) | Product Code | UPC Number | A (in) | B (in) | C (in) | D (in) | E (in) | F (in) | G (in) | H (in) |
|---|---|---|---|---|---|---|---|---|---|---|---|
| 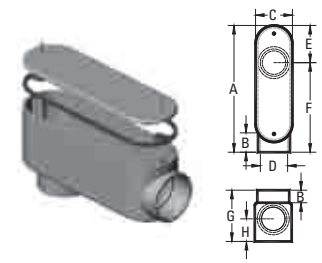 | ½ | RSLB10S | 45620 | 4.337 | 0.639 | 1.268 | 0.840 | 1.297 | 4.095 | 2.487 | 1.005 |
| | ¾ | RSLB20S | 45630 | 5.395 | 0.810 | 1.536 | 1.050 | 1.297 | 4.095 | 2.487 | 1.005 |
| | 1 | RSLB30S | 45640 | 6.250 | 0.910 | 1.700 | 1.335 | 1.500 | 4.750 | 2.075 | 1.125 |
| | 1¼ | RSLB40S | 45650 | 7.625 | 1.050 | 2.300 | 1.100 | 1.750 | 5.750 | 3.575 | 1.562 |
| | 1½ | RSLB50S | 45660 | 8.250 | 1.125 | 2.675 | 1.900 | 1.750 | 6.500 | 3.938 | 1.656 |
| | 2 | RSLB60S | 45670 | 10.531 | 1.160 | 3.188 | 2.375 | 2.344 | 8.156 | 4.535 | 1.968 |
| | 2½ | RSLB70S | 45675 | 13.630 | 1.750 | 4.500 | 2.870 | 2.733 | 9.825 | 6.240 | 2.610 |
| | 3 | RSLB80S | 45680 | 13.630 | 1.900 | 4.500 | 3.510 | 3.805 | 10.897 | 6.240 | 2.610 |
| | 3½ | RSLB90S | 45610 | 16.000 | 2.125 | 5.536 | 4.000 | 4.535 | 11.465 | 7.500 | 2.975 |
| | 4 | RSLB100S | 45681 | 16.000 | 2.125 | 5.536 | 4.530 | 4.535 | 11.465 | 7.500 | 2.975 |

| Type LL | Sizes (in) | Product Code | UPC Number | A (in) | B (in) | C (in) | D (in) | E (in) | F (in) | G (in) |
|---|---|---|---|---|---|---|---|---|---|---|
| 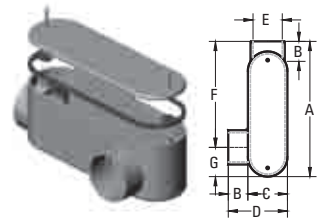 | ½ | RSLL10S | 46650 | 4.337 | 0.639 | 1.268 | 2.487 | 0.840 | 4.095 | 1.297 |
| | ¾ | RSLL20S | 46655 | 5.395 | 0.810 | 1.536 | 2.487 | 1.050 | 4.095 | 1.297 |
| | 1 | RSLL30S | 46660 | 6.250 | 0.910 | 1.700 | 2.075 | 1.335 | 4.750 | 1.500 |
| | 1¼ | RSLL40S | 46665 | 7.625 | 1.050 | 2.300 | 3.575 | 1.100 | 5.750 | 1.750 |
| | 1½ | RSLL50S | 46670 | 8.250 | 1.125 | 2.675 | 3.938 | 1.900 | 6.500 | 1.750 |
| | 2 | RSLL60S | 45682 | 10.531 | 1.160 | 3.188 | 4.535 | 2.375 | 8.156 | 2.344 |
| | 2½ | RSLL70S | 45672 | 13.630 | 1.750 | 4.500 | 6.240 | 2.870 | 9.825 | 3.805 |
| | 3 | RSLL80S | 46674 | 13.630 | 1.900 | 4.500 | 6.240 | 3.510 | 10.897 | 2.733 |
| | 3½ | RSLL90S | 46678 | 16.000 | 2.125 | 5.536 | 7.500 | 4.000 | 11.465 | 4.535 |
| | 4 | RSLL100S | 46676 | 16.000 | 2.125 | 5.536 | 7.500 | 4.530 | 11.465 | 4.535 |

| Type LR | Sizes (in) | Product Code | UPC Number | A (in) | B (in) | C (in) | D (in) | E (in) | F (in) | G (in) |
|---|---|---|---|---|---|---|---|---|---|---|
| 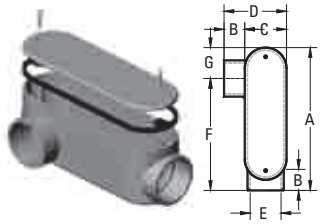 | ½ | RSLR10S | 46700 | 4.337 | 0.639 | 1.268 | 2.487 | 0.840 | 4.095 | 1.297 |
| | ¾ | RSLR20S | 46705 | 5.395 | 0.810 | 1.536 | 2.487 | 1.050 | 4.095 | 1.297 |
| | 1 | RSLR30S | 46710 | 6.250 | 0.910 | 1.700 | 2.075 | 1.335 | 4.750 | 1.500 |
| | 1¼ | RSLR40S | 46715 | 7.625 | 1.050 | 2.300 | 3.575 | 1.100 | 5.750 | 1.750 |
| | 1½ | RSLR50S | 46720 | 8.250 | 1.125 | 2.675 | 3.938 | 1.900 | 6.500 | 1.750 |
| | 2 | RSLR60S | 45683 | 10.531 | 1.160 | 3.188 | 4.535 | 2.375 | 8.156 | 2.344 |
| | 2½ | RSLR70S | 46725 | 13.630 | 1.750 | 4.500 | 6.240 | 2.870 | 9.825 | 3.805 |
| | 3 | RSLR80S | 46728 | 13.630 | 1.900 | 4.500 | 6.240 | 3.510 | 10.897 | 2.733 |
| | 3½ | RSLR90S | 46738 | 16.000 | 2.125 | 5.536 | 7.500 | 4.000 | 11.465 | 4.535 |
| | 4 | RSLR100S | 46735 | 16.000 | 2.125 | 5.536 | 7.500 | 4.530 | 11.465 | 4.535 |

## Fittings - Access Fittings

| Type E | Sizes (in) | Product Code | UPC Number | A (in) | B (in) | C (in) | D (in) |
|---|---|---|---|---|---|---|---|
| 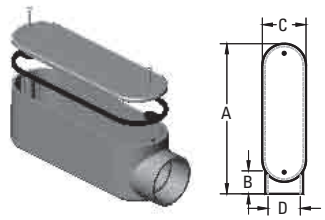 | ½ | RSE10S | 46630 | 4.337 | 0.639 | 1.268 | 0.840 |
| | ¾ | RSE20S | 46632 | 5.395 | 0.810 | 1.536 | 1.050 |
| | 1 | RSE30S | 46634 | 6.250 | 0.910 | 1.700 | 1.335 |
| | 1¼ | RSE40S | 46636 | 7.625 | 1.050 | 2.300 | 1.100 |
| | 1½ | RSE50S | 46638 | 8.250 | 1.125 | 2.675 | 1.900 |
| | 2 | RSE60S | 46640 | 10.351 | 1.160 | 3.188 | 2.375 |
| | 2½ | RSE70S | 46642 | 13.630 | 1.750 | 4.500 | 2.870 |
| | 3 | RSE80S | 46644 | 13.630 | 1.900 | 4.500 | 3.510 |
| | 3½ | RSE90S | 46648 | 16.000 | 2.125 | 5.536 | 4.000 |
| | 4 | RSE100S | 46646 | 16.000 | 2.125 | 5.536 | 4.530 |

| Type T | Sizes (in) | Product Code | UPC Number | A (in) | B (in) | C (in) | D (in) |
|---|---|---|---|---|---|---|---|
| 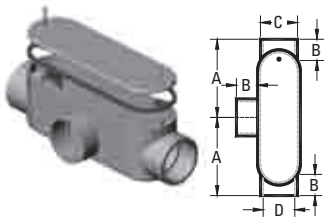 | ½ | RST10S | 45690 | 2.280 | 0.639 | 1.100 | 0.840 |
| | ¾ | RST20S | 45700 | 2.803 | 0.810 | 1.325 | 1.050 |
| | 1 | RST30S | 45710 | 3.250 | 0.910 | 1.600 | 1.335 |
| | 1¼ | RST40S | 45720 | 3.950 | 1.050 | 2.250 | 1.100 |
| | 1½ | RST50S | 45723 | 4.250 | 1.125 | 2.250 | 1.900 |
| | 2 | RST60S | 45725 | 5.438 | 1.160 | 2.820 | 2.375 |
| | 2½ | RST70S | 46745 | 7.300 | 1.750 | 3.950 | 2.870 |
| | 3 | RST80S | 46748 | 7.300 | 1.900 | 3.950 | 3.510 |
| | 3½ | RST90S | 46752 | 8.535 | 2.125 | 5.000 | 4.000 |
| | 4 | RST100S | 46750 | 8.535 | 2.125 | 5.000 | 4.530 |

| Type TB | Sizes (in) | Product Code | UPC Number | A (in) | B (in) | C (in) | D (in) | E (in) | F (in) | G (in) | H (in) |
|---|---|---|---|---|---|---|---|---|---|---|---|
| 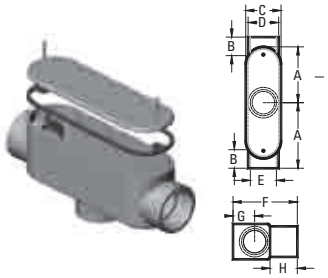 | ½ | RSTB10S | 45692 | 2.280 | 0.639 | 1.268 | 1.100 | 0.840 | 2.487 | 1.005 | 0.750 |
| | ¾ | RSTB20S | 45702 | 2.803 | 0.810 | 1.536 | 1.325 | 1.050 | 2.487 | 1.005 | 0.810 |
| | 1 | RSTB30S | 45712 | 3.250 | 0.910 | 1.700 | 1.600 | 1.335 | 2.075 | 1.125 | 1.115 |
| | 1¼ | RSTB40S | 45721 | 3.950 | 1.050 | 2.300 | 2.250 | 1.100 | 3.575 | 1.562 | 1.300 |
| | 1½ | RSTB50S | 45724 | 4.250 | 1.125 | 2.675 | 2.250 | 1.900 | 3.938 | 1.656 | 1.425 |
| | 2 | RSTB60S | 45727 | 5.438 | 1.160 | 3.188 | 2.820 | 2.375 | 4.535 | 1.968 | 1.160 |
| | 2½ | RSTB70S | 46760 | 7.300 | 1.750 | 4.500 | 3.950 | 2.870 | 6.240 | 2.610 | - |
| | 3 | RSTB80S | 46762 | 7.300 | 1.900 | 4.500 | 3.950 | 3.510 | 6.240 | 2.610 | - |
| | 3½ | RSTB90S | 46766 | 8.535 | 2.125 | 5.536 | 5.000 | 4.000 | 7.500 | 2.975 | - |
| | 4 | RSTB100S | 46764 | 8.535 | 2.125 | 5.536 | 5.000 | 4.530 | 7.500 | 2.975 | - |

Fittings - Cover Plates

## Single Gang Cover Plates - F Series




| Description | Product Code | UPC Number |
|---|---|---|
| Toggle Switch | RTSC15-10 | 45845 |
| Duplex Receptacle | RDRC15-10R20 | 44685 |
| Single Receptacle - 15 Amp | RC15-10R20-3 | 47035 |
| Single Receptacle - 20 Amp | RC15-10R30-3 | 47036 |
| Single Receptacle - 30 Amp | RC15-10 | 47037 |
| Single Blank with Gasket | RBRC15-10 | 44680 |
| Gasket | GASK15-10 | 44682 |

## Double Gang Cover Plates - F Series




| Description | Product Code | UPC Number |
|---|---|---|
| Double Switch | RTSC20-2 | 45846 |
| Combo Switch/Receptacle | RTSDC20-2 | 45847 |
| Double Duplex | RDRC20-2 | 44686 |
| Double Blank with Gasket | RBRC20-2 | 44681 |
| Gasket | GASK20-2 | 45949 |

## Triple Gang Cover Plates - F Series




| Description | Product Code | UPC Number |
|---|---|---|
| Triple Switch | RTSC20-3 | 45857 |
| Double Switch Receptacle | RDSDR20-3 | 44689 |
| Double Receptacle/Switch | RTSDC20-3 | 45858 |
| Triple Receptacle | RDRC20-3 | 44688 |
| Triple Blank with Gasket | RBRC20-3 | 44683 |
| Gasket | GASK20-3 | 45859 |

## Fittings - Weatherproof Cover Plates

### Single Gang Weatherproof Cover Plates



RVSC15-10 RVSC15-10 RWTG15-10 RWGF15-10 RWTL RVSC15-10 GASK W

| Description | Product Code | UPC Number |
|---|---|---|
| Toggle Switch Cover | RVSC15-10 | 45940 |
| Plunger Switch Cover | RVPT15-10 | 45930 |
| Toggle | RWTG15-10 | 45339 |
| Duplex Receptacle | RWDR15-10 | 45093 |
| Duplex Receptacle - White | RWDR15-10W | 45094 |
| Ground Fault Receptacle | RWGF15-10 | 45095 |
| Ground Fault Receptacle - White | RWGF15-10W | 45098 |
| Single Receptacle - 15 Amp | RWTL15 | 45470 |
| Single Receptacle - 20 Amp | RWTL20 | 45472 |
| Single Receptacle - 30 Amp | RWTL30 | 45480 |
| Single Receptacle - 50 Amp | RWTL50 | 45482 |
| Gasket | GASK W | 45484 |

### Double Gang Weatherproof Cover Plates



RVSC20-2 RVSRC20-2 RVSDR20-2 RVSRR20-2 GASK20-2

| Description | Product Code | UPC Number |
|---|---|---|
| Double Toggle | RVSC20-2 | 45941 |
| Plunger/GFI | RVSRC20-2 | 45947 |
| Plunger/Duplex Receptacle | RVSDR20-2 | 45945 |
| Plunger/Single Receptacle | RVSRR20-2 | 45948 |
| Gasket | GASK20-2 | 45949 |

Fittings - Slab Boxes

## Single Gang Boxes - F Series



RFS



RFSS



RFSC



RFSCC

| Description | Product Code | UPC Number | Volume (in3) |
|---|---|---|---|
| ½" FS | RFS10 | 45200 | 17.0 |
| ¾" FS | RFS15 | 45210 | 17.0 |
| ½" FSS | RFSS10 | 45240 | 17.5 |
| ¾" FSS | RFSS15 | 45250 | 17.5 |
| ½" FSC | RFSC10 | 45220 | 16.3 |
| ¾" FSC | RFSC15 | 45230 | 16.3 |
| ½" FSCC | RFSCC10 | 45233 | 17.0 |
| ¾" FSCC | RFSCC15 | 45235 | 17.0 |

## Single Gang Deep Boxes - FD Series



RFDS



RFDC



BLANK



347 VOLT

**Outside Dimensions: Length = 4.5", Width = 6.6", Height = 2.5", except BLANK, L = 4.5", W = 6.6", H = 3.0"**

| Description | Product Code | UPC Number | Volume (in3) |
|---|---|---|---|
| ½" FSC | RFSC3-10 | 45224 | 56.0 |
| ¾" FSC | RFSC3-15 | 45232 | 56.0 |
| 1" FSC | RFSC3-20 | 45228 | 56.0 |
| ½" FS | RFS3-10 | 45208 | 54.0 |
| ¾" FS | RFS3-15 | 45218 | 54.0 |
| 1" FS | RFS3-20 | 45219 | 54.0 |
| BLANK | RFD-3 | 45155 | 73.8 |

## Double Gang Boxes - F Series


FS


FSS


FSC


FSCC


BLANK

**Outside Dimensions: Length = 4.5", Width = 4.75", Height = 2.5", except BLANK, L=4.75", W=4.75", H=3.0"**

| Description | Product Code | UPC Number | Volume (in3) |
|---|---|---|---|
| ½" FS | RFS2-10 | 45205 | 39.5 |
| ¾" FS | RFS2-15 | 45215 | 39.5 |
| 1" FS | RFS2-20 | 45216 | 39.5 |
| ½" FSS | RFSS2-10 | 45242 | 37.0 |
| ¾" FSS | RFSS2-15 | 45244 | 37.0 |
| 1" FSS | RFSS2-20 | 45246 | 37.0 |
| ½" FSC | RFSC2-10 | 45222 | 37.0 |
| ¾" FSC | RFSC2-15 | 45231 | 37.0 |
| 1" FSC | RFSC2-20 | 45226 | 37.0 |
| ½" FSCC | RFSCC2-10 | 45234 | 36.0 |
| ¾" FSCC | RFSCC2-15 | 45238 | 36.0 |
| 1" FSCC | RFSCC2-20 | 45239 | 36.0 |
| BLANK | RFD-D | 45150 | 52.0 |

## Triple Gang Boxes - F Series


FSC


FS


BLANK

**Outside Dimensions: Length = 4.5", Width = 6.6", Height = 2.5", except BLANK, L = 4.5", W = 6.6", H = 3.0"**

| Description | Product Code | UPC Number | Volume (in3) |
|---|---|---|---|
| ½" FSC | RFSC3-10 | 45224 | 56.0 |
| ¾" FSC | RFSC3-15 | 45232 | 56.0 |
| 1" FSC | RFSC3-20 | 45228 | 56.0 |
| ½" FS | RFS3-10 | 45208 | 54.0 |
| ¾" FS | RFS3-15 | 45218 | 54.0 |
| 1" FS | RFS3-20 | 45219 | 54.0 |
| BLANK | RFD-3 | 45155 | 73.8 |

## Octagonal Boxes



| Size (in) | Product No. | UPC No. |
|---|---|---|
| 4 x 1½ | ROB15/10 | 45520 |
| 4 x 2 | ROB20 | 45525 |
| ¾ | RKO15 | 45450 |
| 1 | RKO20 | 45455 |

## Octagonal Box Extension Rings



| Size (in) | Product No. | UPC No. |
|---|---|---|
| 1 | RXR20 | 46490 |
| 2 | RXR35 | 46495 |

## Junction Boxes With Gasket



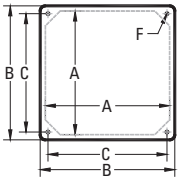





| Nominal Size (in) | Product Number | UPC Number | Inside Length & Width (A) (in) | Outside Length & Width (B) (in) | Length Screw to Screw (C) (in) | Outside Height (E) (in) | Inside Height (D) (in) | Screw Size (F) | Volume (in3) |
|---|---|---|---|---|---|---|---|---|---|
| 4 x 4 x 2 | RJB442 | 45300 | 3.675 | 4.000 | 3.450 | 2.125 | 2.000 | 8-32 | 25.4 |
| 4 x 4 x 4 | RJB444 | 45310 | 3.675 | 4.000 | 3.450 | 4.188 | 3.750 | 8-32 | 47.5 |
| 4 x 4 x 6 | RJB446 | 45315 | 3.675 | 4.000 | 3.450 | 6.225 | 6.000 | 8-32 | 76.1 |
| 5 x 5 x 2 | RJB552 | 45320 | 4.680 | 5.000 | 4.485 | 2.000 | 1.845 | 8-32 | 38.7 |
| 6 x 6 x 4 | RJB664 | 45330 | 6.000 | 6.375 | 5.813 | 4.188 | 4.000 | 10-32 | 139.5 |
| 6 x 6 x 6 | RJB666 | 45335 | 6.000 | 6.375 | 5.813 | 6.188 | 6.000 | 10-32 | 209.3 |
| 8 x 8 x 4 | RJB884 | 45340 | 8.075 | 8.625 | 7.996 | 4.230 | 4.005 | ¼-20 | 258.6 |
| 8 x 8 x 7 | RJB887 | 45350 | 8.100 | 8.625 | 7.996 | 7.250 | 7.035 | ¼-20 | 455.6 |
| 12 x 12 x 4 | RJB12124 | 45280 | 12.085 | 12.580 | 11.874 | 4.256 | 4.030 | ¼-20 | 578.3 |
| 12 x 12 x 6 | RJB12126 | 45290 | 12.085 | 12.580 | 11.874 | 6.240 | 6.025 | ¼-20 | 864.6 |
| 12 x 12 x 8 | RJB12128 | 45295 | 12.085 | 12.580 | 11.874 | 8.250 | 8.025 | ¼-20 | 1151.6 |

## Highway Boxes





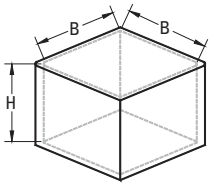


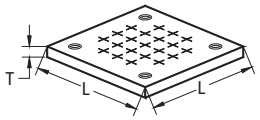


| Nominal Size (in) | Product Number | UPC Number | Box Inside Length & Width (B) (in) | Box Inside Depth (H) (in) | Lid Length & Width (L) (in) | Thickness of Lid (T) (in) | Volume (in3) |
|---|---|---|---|---|---|---|---|
| 6 x 6 x 4 | H664 | 47040 | 6.0 | 4.25 | 9.0 | 0.60 | 139.5 |
| 6 x 6 x 6 | H666 | 47041 | 6.0 | 6.25 | 9.0 | 0.60 | 209.3 |
| 8 x 8 x 4 | H884 | 47042 | 8.0 | 4.25 | 11.5 | 0.75 | 258.6 |
| 8 x 8 x 6 | H886 | 47043 | 8.0 | 6.25 | 11.5 | 0.75 | 400.0 |
| 8 x 8 x 7 | H887 | 47044 | 8.0 | 7.25 | 11.5 | 0.75 | 455.6 |
| 8 x 8 x 7 | H887-A | 47045 | 8.0 | 7.25 | 11.5 | 0.75 | 418.4 |

## Junction Box Adapters



| Size (in) | Product No. | UPC No. |
|---|---|---|
| ½ | RJBA10 | 45360 |
| ¾ | RJBA15 | 45370 |
| 1 | RJBA20 | 45380 |
| 1¼ | RJBA25 | 45390 |
| 1½ | RJBA30 | 45400 |
| 2 | RJBA35 | 45410 |
| 2½ | RJBA40 | 45420 |
| 3 | RJBA45 | 45430 |
| 3½ | RJBA50 | 45435 |
| 4 | RJBA55 | 45440 |

## Duplex Floor Boxes & Cover (*Includes Leveling Ring)



| Size (in) | Product No. | UPC No. |
|---|---|---|
| 4 x ¾ | RFDB4 | 46980 |
| 2 x ¾, 2 x 1 | RFDB2 | 46982 |
| Polycarbonate Bronze Cover | RFDBC | 46984 |

**Notes:**

**Our various pipe and fittings solutions have been manufactured to meet the needs of our customers and their applications. Contact one of the below Sales Centres for more information:**

- Municipal Pipe & Fittings Solutions
- Plumbing Pipe & Fittings Solutions
- Electrical Pipe & Fittings Solutions
- Industrial Pipe & Fittings Solutions
- Irrigation Pipe & Fittings Solutions

**Sales & Distribution Centres:**

Langley, BC, Canada
T/F 1.800.663.0696
F 1.800.663.6564

Woodbridge, ON, Canada
T/F 1.866.769.7473
F 905.856.3986

Laval, QC, Canada
T/F 1.800.465.9754
F 450.688.6624

**Distribution Centres:**

Calgary, AB, Canada
T/F 1.800.663.0696
F 1.800.663.6564

Winnipeg, MB, Canada
T/F 1.800.663.0696
F 1.800.663.6564

**royalelectricalca.com**





MIX
Paper from responsible sources
FSC® C003472

E_RCPF_BRV4
Printed 02.2014

ROYAL® Building Products

Pipe & Fittings Solutions | Municipal Plumbing Electrical Industrial Irrigation

# Rigid PVC Conduit Pipe & Fittings

A system for residential, industrial, commercial and institutional applications.







ROYAL® Electrical Solutions

ROYAL Electrical Solutions

# Table of Contents




| | |
|---|---|
| Product Description - Features and Benefits | 1 |
| Installation Guidelines - Solvent Welding Joints | 2 |
| Solvent Welding Joints/Pipe Dimensions/Specs | 3 |
| Solvent Cementing | 4 |
| Expansion and Contraction | 5 |
| Setting the Piston Opening | 6 |
| Fittings - Bends (Bell End) | 7-8 |
| Fittings - Miscellaneous | 9-18 |


**Note:** This brochure is not intended to assume the authority of the Design Engineer. Actual jobsite conditions will vary significantly. The sole responsibility for all design and installation decisions lies with the Design Engineer. All local health and safety regulations must be followed.

# Rigid PVC Conduit Pipe & Fittings

A system for residential, industrial, commercial and institutional applications.

### Product Description & Applications

Royal Building Products® Electrical Solutions manufactures a complete line of Rigid PVC Conduit pipe and fittings for electrical applications. Our products are designed to reduce labour and maintenance costs, while offering superior performance.

Products are certified by the Canadian Standards Association (CSA) and Underwriters Laboratories (UL) for use in above and below ground applications. Our Rigid PVC conduit pipe and fittings are available in 12 to 150mm (½- to 6-inch) diameters and 3- or 6-metre (10- or 20-foot) lengths.

### Standards and Codes

Royal Electrical Solutions Rigid PVC Conduit pipe and fittings are certified to CSA Standards as noted below. Our Rigid PVC conduit pipe and fittings shall be installed according to the Canadian Electrical Code (CEC) Part I, Rules 12-1100 - 12-1122 and the National Electrical Code (NEC) Article 352.

| Pipe | Fittings |
|---|---|
| C22.2 No. 211.2 | C22.2<br>No. 18.2, 85 (Boxes)<br>No. 40 (Electrical Encl.)<br>No. 42.1 (Covers)<br>No. 85 (Fittings) |
| UL 651 | UL 514C (Boxes)<br>UL 50 (Electrical Encl.)<br>UL 514D (Covers)<br>UL 651 (Fittings) |
| Conforms to NEMA TC2 | |





### Features and Benefits

#### Saves Labour

Rigid PVC Conduit pipe and fittings are easy to install, cut and join.

#### Easy Wire Pulls

The conduit's smooth interior surface reduces friction and prevents damage to wires when pulling wire and conductors for long runs and even through 90° bends.

#### Lightweight Materials

Rigid PVC Conduit is easier to move and handle because it is approximately one-fifth the weight of steel and half the weight of aluminum.

**Approximate Weight Comparison**

| Size mm (in) | PVC lb/100ft (kg/m) | Aluminum lb/100ft (kg/m) | Steel lb/100ft (kg/m) |
|---|---|---|---|
| 12 (½) | 16.1 (0.24) | 27 (0.40) | 79 (1.20) |
| 19 (¾) | 21.5 (0.32) | 37 (0.55) | 105 (1.55) |
| 25 (1) | 31.9 (0.47) | 53 (0.80) | 153 (2.30) |
| 32 (1¼) | 43.8 (0.65) | 70 (1.05) | 201 (3.00) |
| 38 (1½) | 52.3 (0.78) | 86 (1.30) | 249 (3.70) |
| 50 (2) | 70.3 (1.05) | 116 (1.75) | 334 (5.00) |
| 63 (2½) | 112.0 (1.61) | 183 (2.75) | 527 (7.85) |
| 75 (3) | 146.7 (2.18) | 239 (3.55) | 690 (10.25) |
| 90 (3½) | 176.4 (2.63) | 288 (4.30) | 831 (12.40) |
| 100 (4) | 208.9 (3.11) | 340 (5.10) | 982 (14.60) |
| 125 (5) | 283.4 (4.22) | 465 (6.90) | 1,344 (20.40) |
| 150 (6) | 368.0 (5.48) | 613 (9.10) | 1,771 (26.35) |

#### Simplifies Direct Burial

Royal Electrical Solutions Rigid PVC Conduit does not require additional protection for direct burial installations according to the Canadian Electrical Code (CEC) and the National Electrical Code (NEC). Normal construction practices should be followed for trenching and backfill operations.

#### Non-Conductive

Rigid PVC Conduit is non-conductive.

#### Long Life

Royal Rigid PVC Conduit and fittings resist acids, alkalis, salt solutions and most other chemicals. (Refer to the Royal Chemical Resistance Guide for detailed information.) There is no risk of corrosion when exposed to naturally corrosive soil conditions, electrochemical or galvanic environments. Royal's Rigid PVC Conduit has achieved sunlight resistance as per the requirements of the Electrical Code.

#### FT-4 Rating

Rigid PVC Conduit pipe has an FT-4 Rating and can be used in non-combustible construction as per Part 3 of the National Building Code of Canada (NBC).

## Installation Guidelines

### Cutting

Royal Rigid PVC Conduit can easily be cut with a hacksaw, a fine-toothed handsaw or PVC conduit cutters. For conduit with more than a 50mm (2-inch) diameter, use a mitre box or saw guide to ensure a square cut. Deburr the end using a knife or file.

### Bending

It may be necessary to create bends in the field by heating and deforming Rigid PVC Conduit. To accomplish this, the following guidelines should be followed:

• For heating the Rigid PVC Conduit, use a heat gun or some other flameless heat source. Do not use an open flame to heat the conduit. Rigid PVC Conduit must be heated to approximately 127°C (260°F) in order to bend without kinking.

• Heat a length of conduit equal to approximately 10 times the nominal diameter.

• Once the Rigid PVC Conduit has been adequately heated, bend it to the required angle plus 3 extra degrees. The additional angle will accommodate the "spring back" which will occur during cooling.

• After bending of the conduit is completed, immediately cool the bend using water or cold air.

• According to the Canadian Electrical Code (CEC) and the National Electrical Code (NEC), the minimum bending radius for rigid conduit is as shown in the table below.

| Nominal Size mm (in) | Min. Radius to Centre of Conduit or Tubing mm (in) |
|---|---|
| 16 (½) | 102 (4.016) |
| 21 (¾) | 114 (4.489) |
| 27 (1) | 146 (5.748) |
| 35 (1¼) | 184 (7.244) |
| 41 (1½) | 210 (8.268) |
| 53 (2) | 241 (9.488) |
| 63 (2½) | 267 (10.512) |
| 78 (3) | 330 (12.992) |
| 91 (3½) | 381 (14.606) |
| 103 (4) | 406 (15.984) |
| 129 (5) | 610 (24.016) |
| 155 (6) | 762 (30.000) |





### Procedure for Solvent Welding Joints

• Use solvent cement and primer prior to expiration date marked on container.
• Above 0° C ambient temperature, joints may be assembled without the use of primer, provided adequate penetration and softening of the pipe/fitting surface can be achieved with solvent cement alone.

1. Assemble materials for the job, including correct solvent cement, primer and correctly sized applicator.

2. Cut pipe as square as possible using a hand saw and miter box or mechanical saw. Do not use a diagonal cut, as it reduces the bonding area in the joint.

3. If plastic tubing cutters are used, care must be taken to remove any raised bead at the end of the pipe, caused by cutting. A file or reamer may be used to remove the bead.

4. Use a knife, file or reamer to remove burrs from the inside and outside of the pipe end, as these will hinder the integrity of the joint. All sharp edges should be removed from the inside and outside edges of the pipe to prevent the pipe from pushing the solvent cement into the fitting socket, thereby causing a weak spot to form. The pipe end should be chamfered, as shown below.

**Chamfered Pipe**

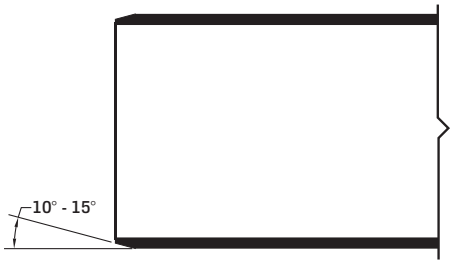

**Procedure for Solvent Welding Joints Continued**

5. All dirt, grease and moisture should be removed from the pipe and socket by thoroughly wiping with a clean, dry cloth.

6. Dry fit pipe and fitting joints prior to cementing. For proper interference fit, the pipe should go easily into the socket approximately ⅓ to ⅔ of the socket depth. If this is not the case, other pipe or fittings should be used.

7. The applicator should be sized according to the size of pipe and fittings being joined. The brush width of the applicator should be equal to approximately ½ of the pipe diameter.

8. Primer is used to penetrate and soften the surfaces so that they will fuse together under a wide variety of conditions. The penetration or softening can be checked by dragging the edge of a knife or sharp object over the coated surface. If a few thousandths of an inch of the primed surface can be scratched or scraped away, proper penetration has occurred. Varying weather conditions affect priming and cementing action and may require more time or repeated applications to either or both surfaces.

9. If using primer, use the correct applicator size (see #7) and aggressively work the primer into the socket, keeping the surface and applicator wet until the surface has softened, re-dipping the applicator as required. When the surface is primed, remove any puddles of primer from the socket.

10. Aggressively work the primer on to the end of the pipe, to a point ½" beyond the depth of the socket.

11. Perform a second application of primer in the socket.

12. While the surfaces are still wet, the appropriate solvent cement should be applied.

13. Using the correct applicator size, aggressively work a full, even layer of cement onto the pipe end to a point equal to the depth of the socket. Do not brush out to a thin paint type layer, as this will dry within a few seconds.

14. Aggressively work a medium layer of cement into the fitting socket; avoid puddling cement in the socket. On the pipe end, do not coat beyond the socket depth or allow cement to run down into the pipe beyond the socket.

15. Apply a second full, even layer of cement on the pipe.

16. Immediately, while the cement is still wet, assemble the joint. Use enough force to ensure that the pipe is fully inserted into the socket. Twist the pipe a ¼ turn as it is being inserted.

17. Hold the joint together for approximately 30 seconds to avoid push out.

18. After assembly, inspect the joint to ensure that there is a ring or bead of cement completely around the juncture of the pipe and socket. If there are voids in this ring, sufficient cement was not applied and the joint may be defective.

19. Remove the excess cement from the pipe and socket (including the ring or bead) using a cloth. Avoid disturbing or moving the joint.

20. Handle newly cemented joints with care until initial set has taken place. Follow set and cure times before handling or testing the system.

**Pipe Dimensions**

| Nominal Size mm (in) | Avg. Outside Diameter mm (in) | Avg. Inside Diameter mm (in) | Avg. Wall Thickness mm (in) | Approx. Weight lb/100ft (kg/m) |
|---|---|---|---|---|
| 12 (½) | 21 (0.840) | 15 (0.608) | 3 (0.116) | 16.1 (0.24) |
| 19 (¾) | 27 (1.050) | 21 (0.810) | 3 (0.120) | 21.5 (0.32) |
| 25 (1) | 33 (1.315) | 26 (1.033) | 4 (0.141) | 31.9 (0.47) |
| 32 (1¼) | 42 (1.660) | 35 (1.362) | 4 (0.149) | 43.8 (0.65) |
| 38 (1½) | 48 (1.900) | 40 (1.592) | 4 (0.154) | 52.3 (0.78) |
| 50 (2) | 60 (2.375) | 52 (2.049) | 4 (0.163) | 70.3 (1.05) |
| 63 (2½) | 73 (2.875) | 62 (2.445) | 5 (0.215) | 112.0 (1.61) |
| 75 (3) | 89 (3.500) | 77 (3.042) | 6 (0.229) | 146.7 (2.18) |
| 90 (3½) | 102 (4.000) | 89 (3.520) | 6 (0.240) | 176.4 (2.63) |
| 100 (4) | 114 (4.500) | 102 (3.998) | 6 (0.251) | 208.9 (3.11) |
| 125 (5) | 141 (5.565) | 127 (5.017) | 7 (0.274) | 283.4 (4.22) |
| 150 (6) | 168 (6.625) | 153 (6.031) | 8 (0.297) | 368.0 (5.48) |

**Specification**

All wiring shall be installed in Royal Electrical Solutions Rigid PVC Conduit and secured with proper fittings. All conduit and fittings shall be manufactured by Royal Building Products, Pipe & Fittings Solutions. All outlets, pull boxes and junction points shall be Royal products.

Exposed conduit shall be securely attached and supported with straps that are installed at the recommended spacing specified in CEC Section 12-1114. The straps must allow for linear expansion and contraction of the conduit due to temperature change. If the variance in temperature exceeds 14°C (25°F), expansion joints shall be installed according to the manufacturer's recommendations.

If Rigid PVC Conduit is embedded in concrete or direct buried, support straps are not required.

### Solvent Cementing

All connections should be made using and applying Royal Electrical Solutions solvent cement.

### Set Times

| Average Initial Set Times | | | |
|---|---|---|---|
| Temperature Range | Pipe Sizes ½" to 1¼" | Pipe Sizes 1½" to 2" | Pipe Sizes 2½" to 6" |
| 15°C to 40°C | 2 min. | 5 min. | 30 min. |
| 5°C to 15°C | 5 min. | 10 min. | 2 hrs. |
| -16°C to 5°C | 10 min. | 15 min. | 12 hrs. |

### Joint Cure Schedule

| Average Joint Cure Times | | | |
|---|---|---|---|
| Temperature Range During Assembly & Cure Periods | Pipe Sizes ½" to 1¼" | Pipe Sizes 1½" to 2" | Pipe Sizes 2½" to 6" |
| 15°C to 40°C | 2 min. | 5 min. | 30 min. |
| 5°C to 15°C | 5 min. | 10 min. | 2 hrs. |
| -16°C to 5°C | 10 min. | 15 min. | 12 hrs. |

In damp or humid weather allow 50% more cure time.

### Estimated Solvent Cement Requirements

| Average Number of Joints per Litre of Solvent Cement | | | | | | | | | |
|---|---|---|---|---|---|---|---|---|---|
| Pipe/Fitting Diameter | ½" | ¾" | 1" | 1½" | 2" | 2½" | 3" | 4" | 6" |
| Number of Joints | 300 | 200 | 125 | 90 | 60 | 40 | 40 | 30 | 10 |

### Estimated Primer Requirements

| Average Number of Joints per Litre of Primer | | | | | | | | | |
|---|---|---|---|---|---|---|---|---|---|
| Pipe/Fitting Diameter | ½" | ¾" | 1" | 1½" | 2" | 2½" | 3" | 4" | 6" |
| Number of Joints | 600 | 400 | 250 | 180 | 120 | 80 | 80 | 60 | 20 |

### Solvent Cementing in Cold Weather:

- Store pipe and fittings in a heated area. Prefabricate as much of the system as possible in a heated area.
- When not in use, store sealed solvent cement and primer between 5°C and 21°C. Do not use open flame or electric heaters to warm cements and primers.
- Take care to remove moisture, ice and snow from the mating surfaces.

### Solvent Cementing in Hot Weather:

- At the time of assembly, the surface temperature of the mating surfaces should not exceed 45°C. Shade or shelter the joint surfaces from direct sunlight for at least 1 hour prior to joining and during the joining process. If necessary, swab the mating surfaces with clean, wet rags to reduce the surface temperature (thoroughly dry surfaces before applying primer or cement).
- Make joints during the cooler early morning hours.
- Apply cement quickly and join pipe to fitting as quickly as possible after applying the cement.
- Keep solvent cement container closed or covered when not in use, to minimize solvent loss.

### Solvent Cementing in Wet Conditions:

- Mating surfaces must be dry when the joint is made.
- Work under a cover or canopy to keep rain off pipe and fittings.
- Work quickly after drying the pipe and fitting to avoid condensation.
- Allow a longer cure time before the system is tested or used.

### Storage and Handling of Solvent Cement and Primer:

- Solvent cement and primer contain highly flammable solvents. Follow all specific safety precautions provided on container label and Material Safety Data Sheet.
- Keep primer and solvent cement away from heat, sparks and open flame.
- Keep containers tightly closed except when in use.
- Ensure proper ventilation of work area and avoid inhaling solvent vapours.
- Where the possibility of splashing exists, wear proper eye protection or a face shield.
- Avoid contact with skin.

### Support Straps

Rigid PVC conduit must be supported with straps when installed in above ground applications. These straps should be installed snugly, while allowing linear movement of the conduit. See the table below for recommended maximum spacing of support straps.

| Maximum Recommended Spacing of Support Straps | | |
|---|---|---|
| Nominal Size mm (in) | CEC Recommended Spacing ft (m) | NEC Recommended Spacing ft (m) |
| 16 (½) | 2½ (0.75) | 3 (0.91) |
| 21 (¾) | 2½ (0.75) | 3 (0.91) |
| 27 (1) | 2½ (0.75) | 3 (0.91) |
| 35 (1¼) | 4 (1.20) | 5 (1.50) |
| 41 (1½) | 4 (1.20) | 5 (1.50) |
| 53 (2) | 6 (1.80) | 5 (1.50) |
| 63 (2½) | 6 (1.80) | 3 - 6 (1.80) |
| 78 (3)-129 (5) | 7 (2.10) | 3½ - 5 (2.10) |
| 155 (6) | 8 (2.50) | 8 (2.50) |

### Storing Conduit Pipe and Fittings

Store Rigid PVC conduit pipe and fittings at the same temperature. Otherwise they may expand and contract at different rates and become incompatible.

### Maximum Operating Temperatures

According to the Canadian Electrical Code (CEC), Rigid PVC conduit is intended for use at a continuous operating temperature of 75°C (167°F). For US applications, our Rigid PVC conduit is rated for use with 90°C wiring, according to the requirements of the NEC.

### Ambient Temperatures

Royal Electrical Solutions Rigid PVC Conduit and fittings can be installed in locations with an ambient temperature not exceeding 50°C (122°F).

### Expansion Joints

According to the CEC, if the amount of expansion expected due to temperature variance during and after construction is more than 45mm, expansion joints must be used.

### Expected Expansion

The coefficient of linear expansion for Rigid PVC conduit is as follows:

$3 \times 10^{-5}$ in (expansion/contraction) / in (pipe length) /°F (change in temperature),

$5.4 \times 10^{-5}$ mm (expansion/contraction)/mm (pipe length)/°C (change in temperature)





### Note:

The following chart shows the amount of expansion expected with various pipe lengths/temperature changes. If the Rigid PVC Conduit is installed in an exposed location, 17°C (30°F) should be added to the amount of temperature change (ΔT) due to the effects of radiant heat.

**Expansion/Contraction of PVC (mm)**

**Length of Pipe Run (m)**

| ΔT (°C) | 2 | 4 | 6 | 8 | 10 | 12 | 14 | 16 | 18 | 20 |
|---|---|---|---|---|---|---|---|---|---|---|
| 5 | 0.54 | 1.08 | 1.62 | 2.16 | 2.70 | 3.24 | 3.78 | 4.32 | 4.86 | 5.40 |
| 10 | 1.08 | 2.16 | 3.24 | 4.32 | 5.40 | 6.48 | 7.56 | 8.64 | 9.72 | 10.80 |
| 15 | 1.62 | 3.24 | 4.86 | 6.48 | 8.10 | 9.72 | 11.34 | 12.96 | 14.58 | 16.20 |
| 20 | 2.16 | 4.32 | 6.48 | 8.64 | 10.80 | 12.96 | 15.12 | 17.28 | 19.44 | 21.60 |
| 25 | 2.70 | 5.40 | 8.10 | 10.80 | 13.50 | 16.20 | 18.90 | 21.60 | 24.30 | 27.00 |
| 30 | 3.24 | 6.48 | 9.72 | 12.96 | 16.20 | 19.44 | 22.68 | 25.92 | 29.16 | 32.40 |
| 35 | 3.78 | 7.56 | 11.34 | 15.12 | 18.90 | 22.68 | 26.46 | 30.24 | 34.02 | 37.80 |
| 40 | 4.32 | 8.64 | 12.96 | 17.28 | 21.60 | 25.92 | 30.24 | 34.56 | 38.88 | 43.20 |
| 45 | 4.86 | 9.72 | 14.58 | 19.44 | 24.30 | 29.16 | 34.02 | 38.88 | 43.74 | 48.60 |
| 50 | 5.40 | 10.80 | 16.20 | 21.60 | 27.00 | 32.40 | 37.80 | 43.20 | 48.60 | 54.00 |

**Expansion/Contraction of PVC (in)**

**Length of Pipe Run (ft)**

| ΔT (°F) | 5 | 10 | 15 | 20 | 25 | 30 | 35 | 40 | 45 | 50 |
|---|---|---|---|---|---|---|---|---|---|---|
| 5 | 0.01 | 0.02 | 0.03 | 0.04 | 0.05 | 0.05 | 0.06 | 0.07 | 0.08 | 0.09 |
| 10 | 0.02 | 0.04 | 0.05 | 0.07 | 0.09 | 0.11 | 0.13 | 0.14 | 0.16 | 0.18 |
| 15 | 0.03 | 0.05 | 0.08 | 0.11 | 0.14 | 0.16 | 0.19 | 0.22 | 0.24 | 0.27 |
| 20 | 0.04 | 0.07 | 0.11 | 0.14 | 0.18 | 0.22 | 0.25 | 0.29 | 0.32 | 0.36 |
| 25 | 0.05 | 0.09 | 0.14 | 0.18 | 0.23 | 0.27 | 0.32 | 0.36 | 0.41 | 0.45 |
| 30 | 0.05 | 0.11 | 0.16 | 0.22 | 0.27 | 0.32 | 0.38 | 0.43 | 0.49 | 0.54 |
| 35 | 0.06 | 0.13 | 0.19 | 0.25 | 0.32 | 0.38 | 0.44 | 0.50 | 0.57 | 0.63 |
| 40 | 0.07 | 0.14 | 0.22 | 0.29 | 0.36 | 0.43 | 0.50 | 0.58 | 0.65 | 0.72 |
| 45 | 0.08 | 0.16 | 0.24 | 0.32 | 0.41 | 0.49 | 0.57 | 0.65 | 0.73 | 0.81 |
| 50 | 0.09 | 0.18 | 0.27 | 0.36 | 0.45 | 0.54 | 0.63 | 0.72 | 0.81 | 0.90 |

### Required Number of Expansion Joints

The following table shows the amount of travel that is available with each trade size of Royal Electrical Solutions Rigid PVC conduit expansion joints:

| Part Number | Description in | Travel Allowance mm (in) |
|---|---|---|
| REJ10 | ½" Expansion Joint | 102 (4) |
| REJ15 | ¾" Expansion Joint | 102 (4) |
| REJ20 | 1" Expansion Joint | 102 (4) |
| REJ25 | 1¼" Expansion Joint | 102 (4) |
| REJ30 | 1½" Expansion Joint | 102 (4) |
| REJ35 | 2" Expansion Joint | 102 (4) |
| REJ40 | 2½" Expansion Joint | 102 (4) |
| REJ45 | 3" Expansion Joint | 204 (8) |
| REJ50 | 3½" Expansion Joint | 204 (8) |
| REJ55 | 4" Expansion Joint | 204 (8) |
| REJ60 | 5" Expansion Joint | 204 (8) |
| REJ65 | 6" Expansion Joint | 204 (8) |

The required number of expansion joints can be calculated using the following formula:

$$\#\ \text{Expansion Joints Required} = \frac{\text{Total Expected Amount of Expansion (in)}}{\text{Expansion Joint Travel Allowance (in)}}$$

$$\#\ \text{Expansion Joints Required} = \frac{\text{Total Expected Amount of Expansion (mm)}}{\text{Expansion Joint Travel Allowance (mm)}}$$

The number of expansion joints calculated above should be rounded up to the nearest whole number.

### Setting the Piston Opening

Expansion joints must be installed such that they allow for both expansion and contraction of the conduit. The piston of the expansion joint must be set at the correct position to allow for this linear movement. To determine the correct position for the piston at the time and temperature of installation, the following formula should be used:

$$\text{Piston Setting (in)} = \frac{\text{(Max. Temp. (°F) – Install. Temp. (°F))}}{\text{Total Expected Temperature Change (°F)}} \times \left[\text{Expansion Joint Expansion Allow. (in)}\right]$$

$$\text{Piston Setting (mm)} = \frac{\text{(Max. Temp. (°C) – Install. Temp. (°C))}}{\text{Total Expected Temperature Change (°C)}} \times \left[\text{Expansion Joint Expansion Allow. (mm)}\right]$$

### Installation Guidelines

• Securely fasten the expansion joint barrel so that it does not shift. Loosely connect the conduit so that it is free to move.

• To function properly, expansion joints should be installed near a fixed point.

• It is better to use more expansion joints than not enough, since problems are difficult to correct after conductors and wires have been pulled through the conduit.

• Ensure that the barrel and piston are aligned and level.

• For vertical installations of expansion joints, install with the piston at the bottom to prevent dirt and water from getting inside the joint and causing it to malfunction.

### Installation Example

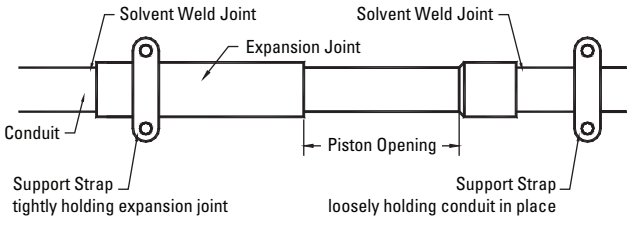


**If one expansion joint is required:**
Securely fasten the barrel of the expansion joint close to one of the boxes. Support the conduit with straps, but allow free movement of the conduit for expansion and contraction. (See Drawing 1)

**If two expansion joints are required:**
**There are two options available:**

1. Firmly fasten one expansion joint near each end of the run and firmly fasten the conduit at the centre. Support the rest of the conduit with straps allowing for movement of the conduit. (See Drawing 2)

2. Firmly fasten the expansion joints back-to-back at the centre of the run. The conduit should be supported with straps to allow free movements as it expands and contracts. (See Drawing 3)

**If three or more expansion joints are required:**
Evenly space the expansion joints along the run of Rigid PVC conduit. Tightly fasten each expansion joint and support the conduit with straps. Do not restrict the movement of the conduit.

*For information on Maximum Recommended Spacing of Support Straps, see page 4.

### Drawings 1 - 4

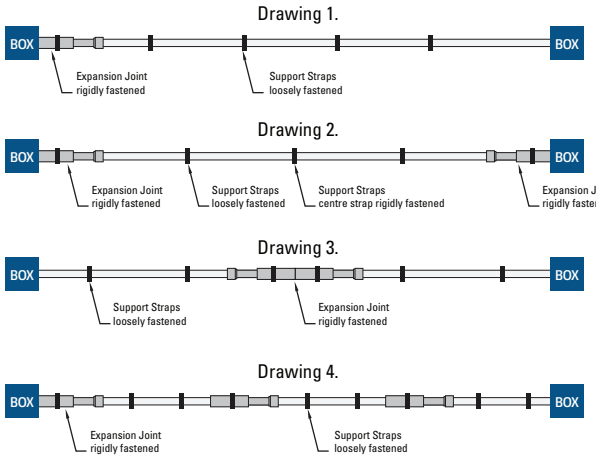

FITTINGS - Bends (Bell Ends)

| 90° Elbows - Bell End | Sizes (in) | Product Code | UPC Number | Diameter (D) (in) | Length (L) (in) | Radius (R) (in) |
|---|---|---|---|---|---|---|
| 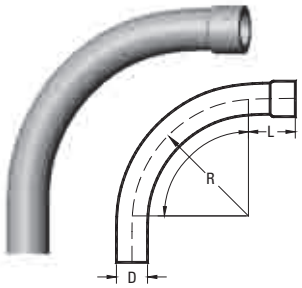 | ½ | REE1090 | 46120 | 0.840 | 1.500 | 4.00 |
| | ¾ | REE1590 | 46150 | 1.050 | 1.500 | 4.50 |
| | 1 | REE2090 | 46180 | 1.315 | 1.875 | 5.75 |
| | 1¼ | REE2590 | 46210 | 1.660 | 2.000 | 7.25 |
| | 1½ | REE3090 | 46240 | 1.900 | 2.000 | 8.25 |
| | 2 | REE3590 | 46270 | 2.375 | 2.000 | 9.50 |
| | 2½ | REE4090 | 46330 | 2.875 | 3.000 | 10.50 |
| | 3 | REE4590 | 46360 | 3.500 | 3.125 | 13.00 |
| | 3½ | REE5090 | 46390 | 4.000 | 3.250 | 15.00 |
| | 4 | REE5590 | 46420 | 4.500 | 3.375 | 16.00 |
| | 5 | REE6090 | 46440 | 5.565 | 3.622 | 24.00 |
| | 6 | REE6590 | 46460 | 6.625 | 3.740 | 30.00 |

| 45° Elbows - Bell End | Sizes (in) | Product Code | UPC Number | Diameter (D) (in) | Length (L) (in) | Radius (R) (in) |
|---|---|---|---|---|---|---|
| 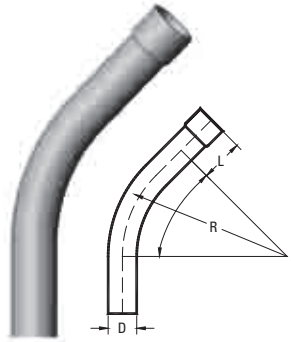 | ½ | REE1045 | 46120 | 0.840 | 1.500 | 4.00 |
| | ¾ | REE1545 | 46150 | 1.050 | 1.500 | 4.50 |
| | 1 | REE2045 | 46180 | 1.315 | 1.875 | 5.75 |
| | 1¼ | REE2545 | 46210 | 1.660 | 2.000 | 7.25 |
| | 1½ | REE3045 | 46240 | 1.900 | 2.000 | 8.25 |
| | 2 | REE3545 | 46270 | 2.375 | 2.000 | 9.50 |
| | 2½ | REE4045 | 46330 | 2.875 | 3.000 | 10.50 |
| | 3 | REE4545 | 46360 | 3.500 | 3.125 | 13.00 |
| | 3½ | REE5045 | 46390 | 4.000 | 3.250 | 15.00 |
| | 4 | REE5545 | 46420 | 4.500 | 3.375 | 16.00 |
| | 5 | REE6045 | 46440 | 5.565 | 3.625 | 24.00 |
| | 6 | REE6545 | 46460 | 6.625 | 3.750 | 30.00 |

| 30° Elbows - Bell End | Sizes (in) | Product Code | UPC Number | Diameter (D) (in) | Length (L) (in) | Radius (R) (in) |
|---|---|---|---|---|---|---|
| 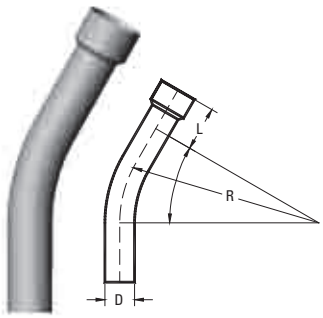 | ½ | REE1030 | 46100 | 0.840 | 1.500 | 4.00 |
| | ¾ | REE1530 | 46130 | 1.050 | 1.500 | 4.50 |
| | 1 | REE2030 | 46160 | 1.315 | 1.875 | 5.75 |
| | 1¼ | REE2530 | 46190 | 1.660 | 2.000 | 7.25 |
| | 1½ | REE3030 | 46220 | 1.900 | 2.000 | 8.25 |
| | 2 | REE3530 | 46274 | 2.375 | 2.000 | 9.50 |
| | 2½ | REE4030 | 46310 | 2.875 | 3.000 | 10.50 |
| | 3 | REE4530 | 46340 | 3.500 | 3.125 | 13.00 |
| | 3½ | REE5030 | 46375 | 4.000 | 3.250 | 15.00 |
| | 4 | REE5530 | 46400 | 4.500 | 3.375 | 16.00 |
| | 5 | REE6030 | 46425 | 5.565 | 3.625 | 24.00 |
| | 6 | REE6530 | 46442 | 6.625 | 3.750 | 30.00 |

| Utilities 90° Elbows - Bell End | Sizes (in) | Product Code | UPC Number | Diameter (D) (in) | Length (L) (in) | Radius (R) (in) |
|---|---|---|---|---|---|---|
| 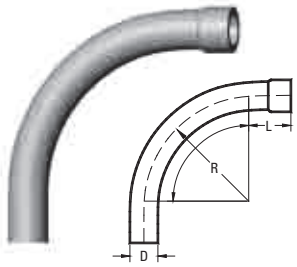 | 2 | REE2-24 | 46501 | 2.375 | 41.20 | 24.00 |
| | 2 | REE2-36 | 46502 | 2.375 | 31.70 | 36.00 |
| | 3 | REE3-24 | 46503 | 3.500 | 41.20 | 24.00 |
| | 3 | REE3-36 | 46504 | 3.500 | 31.70 | 36.00 |
| | 4 | REE4-36 | 46465 | 4.500 | 31.70 | 36.00 |
| | 4 | REE4-48 | 46505 | 4.500 | 31.70 | 48.00 |
| | 5 | REE5-36 | 46506 | 5.565 | 31.70 | 36.00 |
| | 6 | REE6-36 | 46507 | 6.625 | 31.70 | 36.00 |

Fittings - Bends (Plain Ends)

| 90° Elbows - Plain End | Sizes (in) | Product Code | UPC Number | Diameter (D) (in) | Length (L) (in) | Radius (R) (in) |
|---|---|---|---|---|---|---|
| 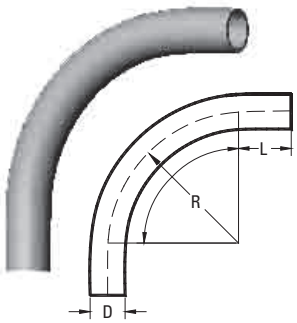 | ½ | REE1090PE | 46120 | 0.840 | 1.500 | 4.00 |
| | ¾ | REE1590PE | 46150 | 1.050 | 1.500 | 4.50 |
| | 1 | REE2090PE | 46180 | 1.315 | 1.875 | 5.75 |
| | 1¼ | REE2590PE | 46210 | 1.660 | 2.000 | 7.25 |
| | 1½ | REE3090PE | 46240 | 1.900 | 2.000 | 8.25 |
| | 2 | REE3590PE | 46270 | 2.375 | 2.000 | 9.50 |
| | 2½ | REE4090PE | 46330 | 2.875 | 3.000 | 10.50 |
| | 3 | REE4590PE | 46360 | 3.500 | 3.125 | 13.00 |
| | 3½ | REE5090PE | 46390 | 4.000 | 3.250 | 15.00 |
| | 4 | REE5590PE | 46420 | 4.500 | 3.375 | 16.00 |
| | 5 | REE6090PE | 46440 | 5.565 | 3.622 | 24.00 |
| | 6 | REE6590PE | 46460 | 6.625 | 3.740 | 30.00 |

| 45° Elbows - Plain End | Sizes (in) | Product Code | UPC Number | Diameter (D) (in) | Length (L) (in) | Radius (R) (in) |
|---|---|---|---|---|---|---|
| 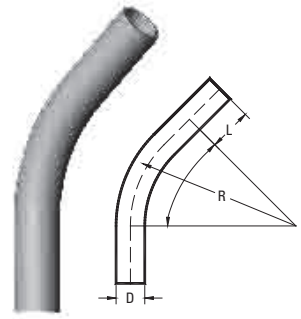 | ½ | REE1045PE | 46110 | 0.840 | 1.500 | 4.00 |
| | ¾ | REE1545PE | 46140 | 1.050 | 1.500 | 4.50 |
| | 1 | REE2045PE | 46170 | 1.315 | 1.875 | 5.75 |
| | 1¼ | REE2545PE | 46200 | 1.660 | 2.000 | 7.25 |
| | 1½ | REE3045PE | 46230 | 1.900 | 2.000 | 8.25 |
| | 2 | REE3545PE | 46280 | 2.375 | 2.000 | 9.50 |
| | 2½ | REE4045PE | 46320 | 2.875 | 3.000 | 10.50 |
| | 3 | REE4545PE | 46350 | 3.500 | 3.125 | 13.00 |
| | 3½ | REE5045PE | 46380 | 4.000 | 3.250 | 15.00 |
| | 4 | REE5545PE | 46415 | 4.500 | 3.375 | 16.00 |
| | 5 | REE6045PE | 46430 | 5.565 | 3.622 | 24.00 |
| | 6 | REE6545PE | 46450 | 6.625 | 3.740 | 30.00 |

| 30° Elbows - Plain End | Sizes (in) | Product Code | UPC Number | Diameter (D) (in) | Length (L) (in) | Radius (R) (in) |
|---|---|---|---|---|---|---|
| 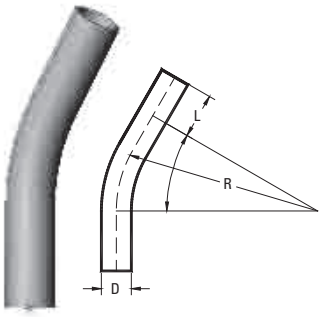 | ½ | REE1030PE | 46100 | 0.840 | 1.500 | 4.00 |
| | ¾ | REE1530PE | 46130 | 1.050 | 1.500 | 4.50 |
| | 1 | REE2030PE | 46160 | 1.315 | 1.875 | 5.75 |
| | 1¼ | REE2530PE | 46190 | 1.660 | 2.000 | 7.25 |
| | 1½ | REE3030PE | 46220 | 1.900 | 2.000 | 8.25 |
| | 2 | REE3530PE | 46274 | 2.375 | 2.000 | 9.50 |
| | 2½ | REE4030PE | 46310 | 2.875 | 3.000 | 10.50 |
| | 3 | REE4530PE | 46340 | 3.500 | 3.125 | 13.00 |
| | 3½ | REE5030PE | 46375 | 4.000 | 3.250 | 15.00 |
| | 4 | REE5530PE | 46400 | 4.500 | 3.375 | 16.00 |
| | 5 | REE6030PE | 46425 | 5.565 | 3.622 | 24.00 |
| | 6 | REE6530PE | 46442 | 6.625 | 3.740 | 30.00 |

| 45° Elbows - Extended Plain End | Sizes (in) | Product Code | UPC Number | Diameter (D) (in) | Length (L) (in) | Radius (R) (in) |
|---|---|---|---|---|---|---|
| 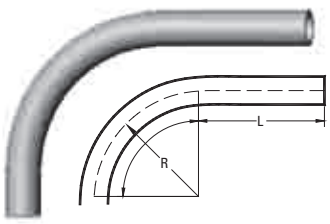 | 1¼ | REE2590E | 46125 | 1.660 | 14.750 | 7.25 |
| | 1½ | REE3090E | 46260 | 1.900 | 14.750 | 8.25 |
| | 2 | REE3590E | 43290 | 2.375 | 14.750 | 9.50 |

## Fittings - Couplings and Adapters

| Couplings | Sizes (in) | Product Code | UPC Number | Outside Diameter (OD) (in) | Inside Diameter (ID) (in) | Length (L) (in) |
|---|---|---|---|---|---|---|
| 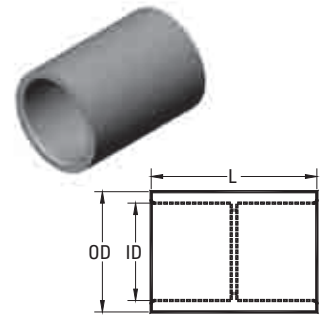 | ½ | REC10 | 45950 | 1.080 | 0.840 | 1.437 |
| | ¾ | REC15 | 45960 | 1.300 | 1.050 | 1.703 |
| | 1 | REC20 | 45970 | 1.590 | 1.315 | 2.031 |
| | 1¼ | REC25 | 45980 | 2.000 | 1.660 | 2.156 |
| | 1½ | REC30 | 45990 | 2.230 | 1.900 | 2.281 |
| | 2 | REC35 | 46000 | 2.720 | 2.375 | 2.406 |
| | 2½ | REC40 | 46010 | 3.320 | 2.875 | 3.187 |
| | 3 | REC45 | 46020 | 4.000 | 3.500 | 3.437 |
| | 3½ | REC50 | 46030 | 4.500 | 4.000 | 3.625 |
| | 4 | REC55 | 46060 | 5.000 | 4.500 | 3.750 |
| | 5 | REC60 | 46080 | 6.120 | 5.565 | 4.187 |
| | 6 | REC65 | 46090 | 7.370 | 6.625 | 4.562 |

| 5° Couplings *(*Fabricated)* | Sizes (in) | Product Code | UPC Number | Outside Diameter (OD) (in) | Inside Diameter (ID) (in) | Length (L) (in) |
|---|---|---|---|---|---|---|
| 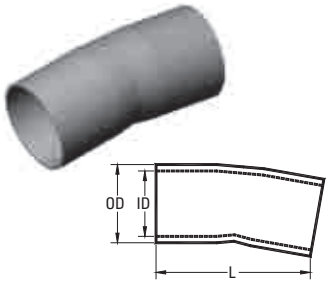 | 2 | R5EC35 | 46800 | 2.375 | 2.049 | 4.0 |
| | 2½ | R5EC40 | 46805 | 3.500 | 2.445 | 5.5 |
| | 3 | R5EC45 | 46810 | 3.500 | 3.042 | 6.0 |
| | 3½ | R5EC50 | 46815 | 4.500 | 3.521 | 7.0 |
| | 4 | R5EC55 | 46820 | 4.500 | 3.998 | 7.0 |
| | 5 | R5EC60 | 46825 | 5.565 | 5.018 | 7.5 |
| | 6 | R5EC65 | 46830 | 6.625 | 6.031 | 11.0 |

| Terminal Adapters (½" - 1¼" Tapered Thread, 6" NPT) | Sizes (in) | Product Code | UPC Number | A (in) | B (in) | Inside Diameter (ID) (in) | Thread (in) |
|---|---|---|---|---|---|---|---|
| 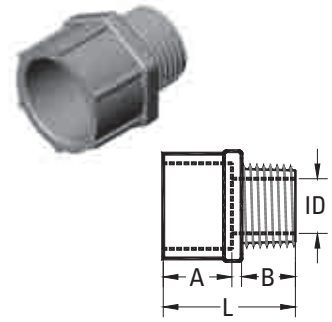 | ½ | RTA10 | 45730 | 0.750 | 0.700 | 0.591 | 1.550 |
| | ¾ | RTA15 | 45740 | 1.000 | 0.675 | 0.790 | 1.750 |
| | 1 | RTA20 | 45750 | 1.115 | 0.625 | 1.000 | 1.860 |
| | 1¼ | RTA25 | 45760 | 1.300 | 0.640 | 1.311 | 2.125 |
| | 1½ | RTA30 | 45770 | 1.425 | 0.725 | 1.530 | 2.250 |
| | 2 | RTA35 | 45780 | 1.150 | 0.800 | 1.970 | 2.100 |
| | 2½ | RTA40 | 45790 | 1.900 | 0.800 | 2.346 | 2.930 |
| | 3 | RTA45 | 45800 | 2.000 | 0.815 | 2.915 | 3.055 |
| | 3½ | RTA50 | 45810 | 1.715 | 1.000 | 3.385 | 3.055 |
| | 4 | RTA55 | 45820 | 1.990 | 0.815 | 3.850 | 3.215 |
| | 5 | RTA60 | 45830 | 2.000 | 1.725 | 5.015 | 5.985 |
| | 6 | RTA65 | 45840 | 2.130 | 1.875 | 6.025 | 6.500 |

| Female Adapters (Npt Tapered Thread) | Sizes (in) | Product Code | UPC Number | A (in) | B (in) | Inside Diameter (ID) (in) | Thread (in) |
|---|---|---|---|---|---|---|---|
| 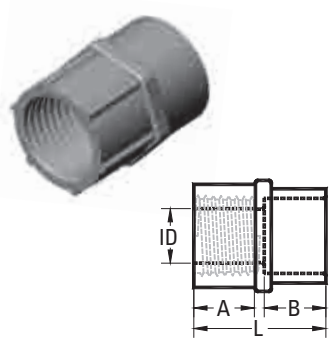 | ½ | RFA10 | 44990 | 0.800 | 0.825 | 0.620 | 1.725 |
| | ¾ | RFA15 | 45000 | 0.800 | 1.000 | 0.820 | 1.900 |
| | 1 | RFA20 | 45010 | 1.000 | 1.200 | 1.065 | 2.300 |
| | 1¼ | RFA25 | 45020 | 1.015 | 1.300 | 1.395 | 2.425 |
| | 1½ | RFA30 | 45030 | 1.050 | 1.290 | 1.575 | 2.440 |
| | 2 | RFA35 | 45040 | 1.075 | 1.375 | 2.050 | 2.550 |
| | 2½ | RFA40 | 45050 | 1.675 | 1.985 | 2.470 | 3.760 |
| | 3 | RFA45 | 45060 | 1.630 | 2.150 | 3.090 | 4.100 |
| | 3½ | RFA50 | 45070 | 1.800 | 2.000 | 3.540 | 3.985 |
| | 4 | RFA55 | 45080 | 1.755 | 2.185 | 4.025 | 4.210 |
| | 5 | RFA60 | 45090 | 2.065 | 3.000 | 5.035 | 5.240 |
| | 6 | RFA65 | 45100 | 2.065 | 3.000 | 6.045 | 5.235 |

Fittings - Expansions Joints, Straps and Meter Accessories

## Expansion Joints

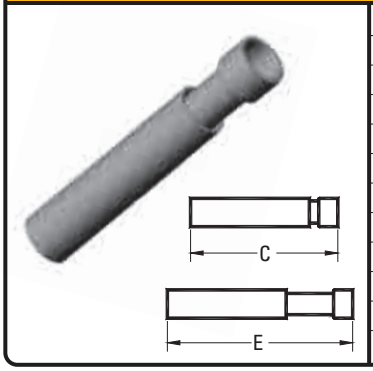


| Sizes (in) | Product Code | UPC Number | Expanded Length (E) (in) | Contracted Length (C) (in) | Travel (in) |
|---|---|---|---|---|---|
| ½ | REJ10 | 44870 | 12.00 | 8.00 | 4.00 |
| ¾ | REJ15 | 44880 | 12.00 | 8.00 | 4.00 |
| 1 | REJ20 | 44890 | 12.50 | 8.50 | 4.00 |
| 1¼ | REJ25 | 44900 | 13.00 | 9.00 | 4.00 |
| 1½ | REJ30 | 44910 | 13.00 | 9.00 | 4.00 |
| 2 | REJ35 | 44920 | 13.25 | 9.25 | 4.00 |
| 2½ | REJ40 | 44930 | 13.25 | 9.25 | 4.00 |
| 3 | REJ45 | 44940 | 22.25 | 14.25 | 8.00 |
| 3½ | REJ50 | 44950 | 22.25 | 14.25 | 8.00 |
| 4 | REJ55 | 44960 | 22.25 | 14.25 | 8.00 |
| 5 | REJ60 | 44963 | 22.25 | 14.25 | 8.00 |
| 6 | REJ65 | 44966 | 22.25 | 14.25 | 8.00 |

## Expansion Joints

**PVC — 2 Hole**




| Sizes (in) | Product No. | UPC No. |
|---|---|---|
| ½ | RPS10 | 45540 |
| ¾ | RPS15 | 45550 |
| 1 | RPS20 | 45560 |
| 1¼ | RPS25 | 45570 |
| 1½ | RPS30 | 45580 |
| 2 | RPS35 | 45590 |

**PVC Coated Steel — 2 Hole**



| Sizes (in) | Product No. | UPC No. |
|---|---|---|
| 2 | RCS35 | 44783 |
| 2½ | RCS40 | 44784 |
| 3 | RCS45 | 44785 |
| 3½ | RCS50 | 44786 |
| 4 | RCS55 | 44787 |
| 5 | RCS60 | 44788 |
| 6 | RCS65 | 44789 |

**PVC Coated Steel — 1 Hole**



| Sizes (in) | Product No. | UPC No. |
|---|---|---|
| ½ | RCS10-1 | 46850 |
| ¾ | RCS15-1 | 46852 |
| 1 | RCS20-1 | 46854 |
| 1¼ | RCS25-1 | 46856 |
| 1½ | RCS30-1 | 46858 |
| 2 | RCS35-1 | 46860 |
| 2½ | RCS40-1 | 46862 |
| 3 | RCS10-1 | 46864 |
| 4 | RCS10-1 | 46866 |

## Meter Offsets



| Sizes (in) | Product No. | UPC No. |
|---|---|---|
| 1¼ | RM025 | 45500 |
| 2 | RM035 | 45510 |

## Meter Hubs



| Sizes (in) | Product No. | UPC No. |
|---|---|---|
| 1¼ | RMHU25 | 45480 |
| 1½ | RMHU30 | 45485 |
| 2 | RMHU35 | 45490 |

## Long Meter Offsets *(Fabricated)*



| Sizes (in) | Product No. | UPC No. |
|---|---|---|
| 1¼ | RLM025 | 45472 |
| 1½ | RML030 | 45474 |
| 2 | RML035 | 45476 |

## Expansion & Deflection Fittings Assembly



| Sizes (in) | Product No. | UPC No. |
|---|---|---|
| 2 | RSEJ35 | 46990 |
| 3 | RSEJ45 | 46992 |
| 4 | RSEJ55 | 46994 |

## Service Entrance Fittings



| Sizes (in) | Product No. | UPC No. |
|---|---|---|
| ½ | REF10 | 44795 |
| ¾ | REF15 | 44800 |
| 1 | REF20 | 44810 |
| 1¼ | REF25 | 44820 |
| 1½ | REF30 | 44830 |
| 2 | REF35 | 44840 |
| 2½ | REF40 | 44842 |
| 3 | REF45 | 44844 |
| 3½ | REF50 | 44852 |
| 4 | REF55 | 44860 |

## Ecovoc Solvent Cement *(*c/w Screw Cap & Dauber)*



| Sizes (in) | Product No. | UPC No. | Carton Qty. |
|---|---|---|---|
| 250ml | RVOC250* | 54790 | 24 |
| 475ml | RVOC475* | 54795 | 12 |
| 950ml | RVOC950* | 54797 | 12 |
| 4L | RVOC4L | 54799 | 4 |

## Privoc Solvent Cement *(*c/w Screw Cap & Dauber)*

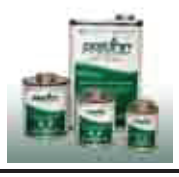

| Sizes (in) | Product No. | UPC No. | Carton Qty. |
|---|---|---|---|
| 250ml | RVOCPR250* | 54800 | 24 |
| 475ml | RVOCPR475* | 54802 | 12 |
| 950ml | RVOCPR950* | 54804 | 12 |
| 4L | RVOCPR4L | 54806 | 4 |

## Fittings - Access Fittings

| Type C | Sizes (in) | Product Code | UPC Number | A (in) | B (in) | C (in) | D (in) | E (in) |
|---|---|---|---|---|---|---|---|---|
| 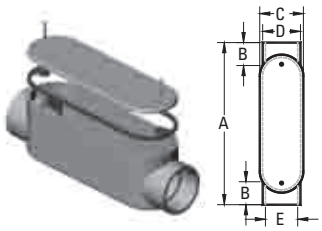 | ½ | RSC10S | 46600 | 5.606 | 0.639 | 1.268 | 1.100 | 0.840 |
| | ¾ | RSC20S | 46605 | 5.606 | 0.810 | 1.536 | 1.325 | 1.050 |
| | 1 | RSC30S | 46610 | 6.500 | 0.910 | 1.700 | 1.600 | 1.335 |
| | 1¼ | RSC40S | 46615 | 7.900 | 1.050 | 2.300 | 2.250 | 1.100 |
| | 1½ | RSC50S | 46620 | 8.500 | 1.125 | 2.675 | 2.250 | 1.900 |
| | 2 | RSC60S | 45605 | 10.875 | 1.160 | 3.188 | 2.820 | 2.375 |
| | 2½ | RSC70S | 45606 | 14.600 | 1.750 | 4.500 | 3.950 | 2.870 |
| | 3 | RSC80S | 45607 | 14.600 | 1.900 | 4.500 | 3.950 | 3.510 |
| | 3½ | RSC90S | 45609 | 17.040 | 2.125 | 5.536 | 5.000 | 4.000 |
| | 4 | RSC100S | 45608 | 17.040 | 2.125 | 5.536 | 5.000 | 4.530 |

| Type LB | Sizes (in) | Product Code | UPC Number | A (in) | B (in) | C (in) | D (in) | E (in) | F (in) | G (in) | H (in) |
|---|---|---|---|---|---|---|---|---|---|---|---|
| 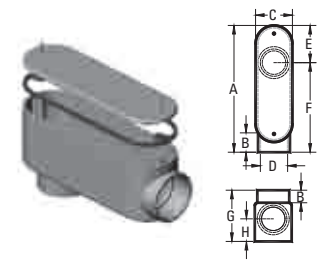 | ½ | RSLB10S | 45620 | 4.337 | 0.639 | 1.268 | 0.840 | 1.297 | 4.095 | 2.487 | 1.005 |
| | ¾ | RSLB20S | 45630 | 5.395 | 0.810 | 1.536 | 1.050 | 1.297 | 4.095 | 2.487 | 1.005 |
| | 1 | RSLB30S | 45640 | 6.250 | 0.910 | 1.700 | 1.335 | 1.500 | 4.750 | 2.075 | 1.125 |
| | 1¼ | RSLB40S | 45650 | 7.625 | 1.050 | 2.300 | 1.100 | 1.750 | 5.750 | 3.575 | 1.562 |
| | 1½ | RSLB50S | 45660 | 8.250 | 1.125 | 2.675 | 1.900 | 1.750 | 6.500 | 3.938 | 1.656 |
| | 2 | RSLB60S | 45670 | 10.531 | 1.160 | 3.188 | 2.375 | 2.344 | 8.156 | 4.535 | 1.968 |
| | 2½ | RSLB70S | 45675 | 13.630 | 1.750 | 4.500 | 2.870 | 2.733 | 9.825 | 6.240 | 2.610 |
| | 3 | RSLB80S | 45680 | 13.630 | 1.900 | 4.500 | 3.510 | 3.805 | 10.897 | 6.240 | 2.610 |
| | 3½ | RSLB90S | 45610 | 16.000 | 2.125 | 5.536 | 4.000 | 4.535 | 11.465 | 7.500 | 2.975 |
| | 4 | RSLB100S | 45681 | 16.000 | 2.125 | 5.536 | 4.530 | 4.535 | 11.465 | 7.500 | 2.975 |

| Type LL | Sizes (in) | Product Code | UPC Number | A (in) | B (in) | C (in) | D (in) | E (in) | F (in) | G (in) |
|---|---|---|---|---|---|---|---|---|---|---|
| 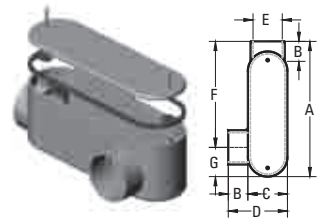 | ½ | RSLL10S | 46650 | 4.337 | 0.639 | 1.268 | 2.487 | 0.840 | 4.095 | 1.297 |
| | ¾ | RSLL20S | 46655 | 5.395 | 0.810 | 1.536 | 2.487 | 1.050 | 4.095 | 1.297 |
| | 1 | RSLL30S | 46660 | 6.250 | 0.910 | 1.700 | 2.075 | 1.335 | 4.750 | 1.500 |
| | 1¼ | RSLL40S | 46665 | 7.625 | 1.050 | 2.300 | 3.575 | 1.100 | 5.750 | 1.750 |
| | 1½ | RSLL50S | 46670 | 8.250 | 1.125 | 2.675 | 3.938 | 1.900 | 6.500 | 1.750 |
| | 2 | RSLL60S | 45682 | 10.531 | 1.160 | 3.188 | 4.535 | 2.375 | 8.156 | 2.344 |
| | 2½ | RSLL70S | 45672 | 13.630 | 1.750 | 4.500 | 6.240 | 2.870 | 9.825 | 3.805 |
| | 3 | RSLL80S | 46674 | 13.630 | 1.900 | 4.500 | 6.240 | 3.510 | 10.897 | 2.733 |
| | 3½ | RSLL90S | 46678 | 16.000 | 2.125 | 5.536 | 7.500 | 4.000 | 11.465 | 4.535 |
| | 4 | RSLL100S | 46676 | 16.000 | 2.125 | 5.536 | 7.500 | 4.530 | 11.465 | 4.535 |

| Type LR | Sizes (in) | Product Code | UPC Number | A (in) | B (in) | C (in) | D (in) | E (in) | F (in) | G (in) |
|---|---|---|---|---|---|---|---|---|---|---|
| 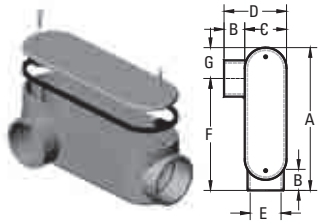 | ½ | RSLR10S | 46700 | 4.337 | 0.639 | 1.268 | 2.487 | 0.840 | 4.095 | 1.297 |
| | ¾ | RSLR20S | 46705 | 5.395 | 0.810 | 1.536 | 2.487 | 1.050 | 4.095 | 1.297 |
| | 1 | RSLR30S | 46710 | 6.250 | 0.910 | 1.700 | 2.075 | 1.335 | 4.750 | 1.500 |
| | 1¼ | RSLR40S | 46715 | 7.625 | 1.050 | 2.300 | 3.575 | 1.100 | 5.750 | 1.750 |
| | 1½ | RSLR50S | 46720 | 8.250 | 1.125 | 2.675 | 3.938 | 1.900 | 6.500 | 1.750 |
| | 2 | RSLR60S | 45683 | 10.531 | 1.160 | 3.188 | 4.535 | 2.375 | 8.156 | 2.344 |
| | 2½ | RSLR70S | 46725 | 13.630 | 1.750 | 4.500 | 6.240 | 2.870 | 9.825 | 3.805 |
| | 3 | RSLR80S | 46728 | 13.630 | 1.900 | 4.500 | 6.240 | 3.510 | 10.897 | 2.733 |
| | 3½ | RSLR90S | 46738 | 16.000 | 2.125 | 5.536 | 7.500 | 4.000 | 11.465 | 4.535 |
| | 4 | RSLR100S | 46735 | 16.000 | 2.125 | 5.536 | 7.500 | 4.530 | 11.465 | 4.535 |

## Fittings - Access Fittings

| Type E | Sizes (in) | Product Code | UPC Number | A (in) | B (in) | C (in) | D (in) |
|---|---|---|---|---|---|---|---|
| 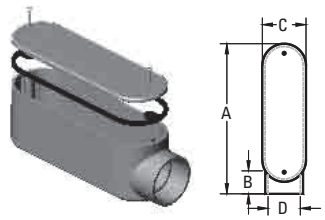 | ½ | RSE10S | 46630 | 4.337 | 0.639 | 1.268 | 0.840 |
| | ¾ | RSE20S | 46632 | 5.395 | 0.810 | 1.536 | 1.050 |
| | 1 | RSE30S | 46634 | 6.250 | 0.910 | 1.700 | 1.335 |
| | 1¼ | RSE40S | 46636 | 7.625 | 1.050 | 2.300 | 1.100 |
| | 1½ | RSE50S | 46638 | 8.250 | 1.125 | 2.675 | 1.900 |
| | 2 | RSE60S | 46640 | 10.351 | 1.160 | 3.188 | 2.375 |
| | 2½ | RSE70S | 46642 | 13.630 | 1.750 | 4.500 | 2.870 |
| | 3 | RSE80S | 46644 | 13.630 | 1.900 | 4.500 | 3.510 |
| | 3½ | RSE90S | 46648 | 16.000 | 2.125 | 5.536 | 4.000 |
| | 4 | RSE100S | 46646 | 16.000 | 2.125 | 5.536 | 4.530 |

| Type T | Sizes (in) | Product Code | UPC Number | A (in) | B (in) | C (in) | D (in) |
|---|---|---|---|---|---|---|---|
| 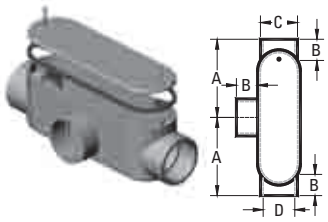 | ½ | RST10S | 45690 | 2.280 | 0.639 | 1.100 | 0.840 |
| | ¾ | RST20S | 45700 | 2.803 | 0.810 | 1.325 | 1.050 |
| | 1 | RST30S | 45710 | 3.250 | 0.910 | 1.600 | 1.335 |
| | 1¼ | RST40S | 45720 | 3.950 | 1.050 | 2.250 | 1.100 |
| | 1½ | RST50S | 45723 | 4.250 | 1.125 | 2.250 | 1.900 |
| | 2 | RST60S | 45725 | 5.438 | 1.160 | 2.820 | 2.375 |
| | 2½ | RST70S | 46745 | 7.300 | 1.750 | 3.950 | 2.870 |
| | 3 | RST80S | 46748 | 7.300 | 1.900 | 3.950 | 3.510 |
| | 3½ | RST90S | 46752 | 8.535 | 2.125 | 5.000 | 4.000 |
| | 4 | RST100S | 46750 | 8.535 | 2.125 | 5.000 | 4.530 |

| Type TB | Sizes (in) | Product Code | UPC Number | A (in) | B (in) | C (in) | D (in) | E (in) | F (in) | G (in) | H (in) |
|---|---|---|---|---|---|---|---|---|---|---|---|
| 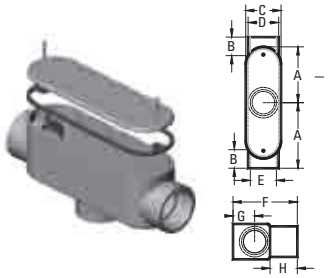 | ½ | RSTB10S | 45692 | 2.280 | 0.639 | 1.268 | 1.100 | 0.840 | 2.487 | 1.005 | 0.750 |
| | ¾ | RSTB20S | 45702 | 2.803 | 0.810 | 1.536 | 1.325 | 1.050 | 2.487 | 1.005 | 0.810 |
| | 1 | RSTB30S | 45712 | 3.250 | 0.910 | 1.700 | 1.600 | 1.335 | 2.075 | 1.125 | 1.115 |
| | 1¼ | RSTB40S | 45721 | 3.950 | 1.050 | 2.300 | 2.250 | 1.100 | 3.575 | 1.562 | 1.300 |
| | 1½ | RSTB50S | 45724 | 4.250 | 1.125 | 2.675 | 2.250 | 1.900 | 3.938 | 1.656 | 1.425 |
| | 2 | RSTB60S | 45727 | 5.438 | 1.160 | 3.188 | 2.820 | 2.375 | 4.535 | 1.968 | 1.160 |
| | 2½ | RSTB70S | 46760 | 7.300 | 1.750 | 4.500 | 3.950 | 2.870 | 6.240 | 2.610 | - |
| | 3 | RSTB80S | 46762 | 7.300 | 1.900 | 4.500 | 3.950 | 3.510 | 6.240 | 2.610 | - |
| | 3½ | RSTB90S | 46766 | 8.535 | 2.125 | 5.536 | 5.000 | 4.000 | 7.500 | 2.975 | - |
| | 4 | RSTB100S | 46764 | 8.535 | 2.125 | 5.536 | 5.000 | 4.530 | 7.500 | 2.975 | - |

Fittings - Cover Plates

## Single Gang Cover Plates - F Series




| Description | Product Code | UPC Number |
|---|---|---|
| Toggle Switch | RTSC15-10 | 45845 |
| Duplex Receptacle | RDRC15-10R20 | 44685 |
| Single Receptacle - 15 Amp | RC15-10R20-3 | 47035 |
| Single Receptacle - 20 Amp | RC15-10R30-3 | 47036 |
| Single Receptacle - 30 Amp | RC15-10 | 47037 |
| Single Blank with Gasket | RBRC15-10 | 44680 |
| Gasket | GASK15-10 | 44682 |

## Double Gang Cover Plates - F Series




| Description | Product Code | UPC Number |
|---|---|---|
| Double Switch | RTSC20-2 | 45846 |
| Combo Switch/Receptacle | RTSDC20-2 | 45847 |
| Double Duplex | RDRC20-2 | 44686 |
| Double Blank with Gasket | RBRC20-2 | 44681 |
| Gasket | GASK20-2 | 45949 |

## Triple Gang Cover Plates - F Series




| Description | Product Code | UPC Number |
|---|---|---|
| Triple Switch | RTSC20-3 | 45857 |
| Double Switch Receptacle | RDSDR20-3 | 44689 |
| Double Receptacle/Switch | RTSDC20-3 | 45858 |
| Triple Receptacle | RDRC20-3 | 44688 |
| Triple Blank with Gasket | RBRC20-3 | 44683 |
| Gasket | GASK20-3 | 45859 |

## Fittings - Weatherproof Cover Plates

### Single Gang Weatherproof Cover Plates



RVSC15-10 RVSC15-10 RWTG15-10 RWGF15-10 RWTL RVSC15-10 GASK W

| Description | Product Code | UPC Number |
|---|---|---|
| Toggle Switch Cover | RVSC15-10 | 45940 |
| Plunger Switch Cover | RVPT15-10 | 45930 |
| Toggle | RWTG15-10 | 45339 |
| Duplex Receptacle | RWDR15-10 | 45093 |
| Duplex Receptacle - White | RWDR15-10W | 45094 |
| Ground Fault Receptacle | RWGF15-10 | 45095 |
| Ground Fault Receptacle - White | RWGF15-10W | 45098 |
| Single Receptacle - 15 Amp | RWTL15 | 45470 |
| Single Receptacle - 20 Amp | RWTL20 | 45472 |
| Single Receptacle - 30 Amp | RWTL30 | 45480 |
| Single Receptacle - 50 Amp | RWTL50 | 45482 |
| Gasket | GASK W | 45484 |

### Double Gang Weatherproof Cover Plates



RVSC20-2 RVSRC20-2 RVSDR20-2 RVSRR20-2 GASK20-2

| Description | Product Code | UPC Number |
|---|---|---|
| Double Toggle | RVSC20-2 | 45941 |
| Plunger/GFI | RVSRC20-2 | 45947 |
| Plunger/Duplex Receptacle | RVSDR20-2 | 45945 |
| Plunger/Single Receptacle | RVSRR20-2 | 45948 |
| Gasket | GASK20-2 | 45949 |

Fittings - Slab Boxes

## Single Gang Boxes - F Series



RFS



RFSS



RFSC



RFSCC

| Description | Product Code | UPC Number | Volume (in3) |
|---|---|---|---|
| ½" FS | RFS10 | 45200 | 17.0 |
| ¾" FS | RFS15 | 45210 | 17.0 |
| ½" FSS | RFSS10 | 45240 | 17.5 |
| ¾" FSS | RFSS15 | 45250 | 17.5 |
| ½" FSC | RFSC10 | 45220 | 16.3 |
| ¾" FSC | RFSC15 | 45230 | 16.3 |
| ½" FSCC | RFSCC10 | 45233 | 17.0 |
| ¾" FSCC | RFSCC15 | 45235 | 17.0 |

## Single Gang Deep Boxes - FD Series



RFDS



RFDC



BLANK



347 VOLT

**Outside Dimensions: Length = 4.5", Width = 6.6", Height = 2.5", except BLANK, L = 4.5", W = 6.6", H = 3.0"**

| Description | Product Code | UPC Number | Volume (in3) |
|---|---|---|---|
| ½" FSC | RFSC3-10 | 45224 | 56.0 |
| ¾" FSC | RFSC3-15 | 45232 | 56.0 |
| 1" FSC | RFSC3-20 | 45228 | 56.0 |
| ½" FS | RFS3-10 | 45208 | 54.0 |
| ¾" FS | RFS3-15 | 45218 | 54.0 |
| 1" FS | RFS3-20 | 45219 | 54.0 |
| BLANK | RFD-3 | 45155 | 73.8 |

## Double Gang Boxes - F Series


FS


FSS


FSC


FSCC


BLANK

**Outside Dimensions: Length = 4.5", Width = 4.75", Height = 2.5", except BLANK, L=4.75", W=4.75", H=3.0"**

| Description | Product Code | UPC Number | Volume (in3) |
|---|---|---|---|
| ½" FS | RFS2-10 | 45205 | 39.5 |
| ¾" FS | RFS2-15 | 45215 | 39.5 |
| 1" FS | RFS2-20 | 45216 | 39.5 |
| ½" FSS | RFSS2-10 | 45242 | 37.0 |
| ¾" FSS | RFSS2-15 | 45244 | 37.0 |
| 1" FSS | RFSS2-20 | 45246 | 37.0 |
| ½" FSC | RFSC2-10 | 45222 | 37.0 |
| ¾" FSC | RFSC2-15 | 45231 | 37.0 |
| 1" FSC | RFSC2-20 | 45226 | 37.0 |
| ½" FSCC | RFSCC2-10 | 45234 | 36.0 |
| ¾" FSCC | RFSCC2-15 | 45238 | 36.0 |
| 1" FSCC | RFSCC2-20 | 45239 | 36.0 |
| BLANK | RFD-D | 45150 | 52.0 |

## Triple Gang Boxes - F Series


FSC


FS


BLANK

**Outside Dimensions: Length = 4.5", Width = 6.6", Height = 2.5", except BLANK, L = 4.5", W = 6.6", H = 3.0"**

| Description | Product Code | UPC Number | Volume (in3) |
|---|---|---|---|
| ½" FSC | RFSC3-10 | 45224 | 56.0 |
| ¾" FSC | RFSC3-15 | 45232 | 56.0 |
| 1" FSC | RFSC3-20 | 45228 | 56.0 |
| ½" FS | RFS3-10 | 45208 | 54.0 |
| ¾" FS | RFS3-15 | 45218 | 54.0 |
| 1" FS | RFS3-20 | 45219 | 54.0 |
| BLANK | RFD-3 | 45155 | 73.8 |

## Octagonal Boxes



| Size (in) | Product No. | UPC No. |
|---|---|---|
| 4 x 1½ | ROB15/10 | 45520 |
| 4 x 2 | ROB20 | 45525 |
| ¾ | RKO15 | 45450 |
| 1 | RKO20 | 45455 |

## Octagonal Box Extension Rings



| Size (in) | Product No. | UPC No. |
|---|---|---|
| 1 | RXR20 | 46490 |
| 2 | RXR35 | 46495 |

## Junction Boxes With Gasket



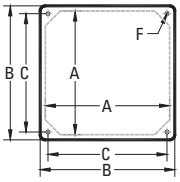





| Nominal Size (in) | Product Number | UPC Number | Inside Length & Width (A) (in) | Outside Length & Width (B) (in) | Length Screw to Screw (C) (in) | Outside Height (E) (in) | Inside Height (D) (in) | Screw Size (F) | Volume (in3) |
|---|---|---|---|---|---|---|---|---|---|
| 4 x 4 x 2 | RJB442 | 45300 | 3.675 | 4.000 | 3.450 | 2.125 | 2.000 | 8-32 | 25.4 |
| 4 x 4 x 4 | RJB444 | 45310 | 3.675 | 4.000 | 3.450 | 4.188 | 3.750 | 8-32 | 47.5 |
| 4 x 4 x 6 | RJB446 | 45315 | 3.675 | 4.000 | 3.450 | 6.225 | 6.000 | 8-32 | 76.1 |
| 5 x 5 x 2 | RJB552 | 45320 | 4.680 | 5.000 | 4.485 | 2.000 | 1.845 | 8-32 | 38.7 |
| 6 x 6 x 4 | RJB664 | 45330 | 6.000 | 6.375 | 5.813 | 4.188 | 4.000 | 10-32 | 139.5 |
| 6 x 6 x 6 | RJB666 | 45335 | 6.000 | 6.375 | 5.813 | 6.188 | 6.000 | 10-32 | 209.3 |
| 8 x 8 x 4 | RJB884 | 45340 | 8.075 | 8.625 | 7.996 | 4.230 | 4.005 | ¼-20 | 258.6 |
| 8 x 8 x 7 | RJB887 | 45350 | 8.100 | 8.625 | 7.996 | 7.250 | 7.035 | ¼-20 | 455.6 |
| 12 x 12 x 4 | RJB12124 | 45280 | 12.085 | 12.580 | 11.874 | 4.256 | 4.030 | ¼-20 | 578.3 |
| 12 x 12 x 6 | RJB12126 | 45290 | 12.085 | 12.580 | 11.874 | 6.240 | 6.025 | ¼-20 | 864.6 |
| 12 x 12 x 8 | RJB12128 | 45295 | 12.085 | 12.580 | 11.874 | 8.250 | 8.025 | ¼-20 | 1151.6 |

## Highway Boxes





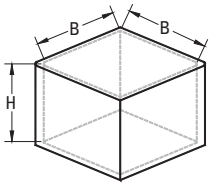


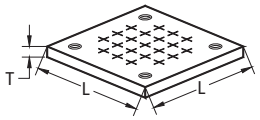


| Nominal Size (in) | Product Number | UPC Number | Box Inside Length & Width (B) (in) | Box Inside Depth (H) (in) | Lid Length & Width (L) (in) | Thickness of Lid (T) (in) | Volume (in3) |
|---|---|---|---|---|---|---|---|
| 6 x 6 x 4 | H664 | 47040 | 6.0 | 4.25 | 9.0 | 0.60 | 139.5 |
| 6 x 6 x 6 | H666 | 47041 | 6.0 | 6.25 | 9.0 | 0.60 | 209.3 |
| 8 x 8 x 4 | H884 | 47042 | 8.0 | 4.25 | 11.5 | 0.75 | 258.6 |
| 8 x 8 x 6 | H886 | 47043 | 8.0 | 6.25 | 11.5 | 0.75 | 400.0 |
| 8 x 8 x 7 | H887 | 47044 | 8.0 | 7.25 | 11.5 | 0.75 | 455.6 |
| 8 x 8 x 7 | H887-A | 47045 | 8.0 | 7.25 | 11.5 | 0.75 | 418.4 |

## Junction Box Adapters



| Size (in) | Product No. | UPC No. |
|---|---|---|
| ½ | RJBA10 | 45360 |
| ¾ | RJBA15 | 45370 |
| 1 | RJBA20 | 45380 |
| 1¼ | RJBA25 | 45390 |
| 1½ | RJBA30 | 45400 |
| 2 | RJBA35 | 45410 |
| 2½ | RJBA40 | 45420 |
| 3 | RJBA45 | 45430 |
| 3½ | RJBA50 | 45435 |
| 4 | RJBA55 | 45440 |

## Duplex Floor Boxes & Cover (*Includes Leveling Ring)



| Size (in) | Product No. | UPC No. |
|---|---|---|
| 4 x ¾ | RFDB4 | 46980 |
| 2 x ¾, 2 x 1 | RFDB2 | 46982 |
| Polycarbonate Bronze Cover | RFDBC | 46984 |

**Notes:**

**Our various pipe and fittings solutions have been manufactured to meet the needs of our customers and their applications. Contact one of the below Sales Centres for more information:**

- Municipal Pipe & Fittings Solutions
- Plumbing Pipe & Fittings Solutions
- Electrical Pipe & Fittings Solutions
- Industrial Pipe & Fittings Solutions
- Irrigation Pipe & Fittings Solutions

**Sales & Distribution Centres:**

Langley, BC, Canada
T/F 1.800.663.0696
F 1.800.663.6564

Woodbridge, ON, Canada
T/F 1.866.769.7473
F 905.856.3986

Laval, QC, Canada
T/F 1.800.465.9754
F 450.688.6624

**Distribution Centres:**

Calgary, AB, Canada
T/F 1.800.663.0696
F 1.800.663.6564

Winnipeg, MB, Canada
T/F 1.800.663.0696
F 1.800.663.6564

**royalelectricalca.com**





MIX
Paper from responsible sources
FSC® C003472

E_RCPF_BRV4
Printed 02.2014

ROYAL® Building Products

Pipe & Fittings Solutions | Municipal Plumbing Electrical Industrial Irrigation

# Rigid PVC Conduit Pipe & Fittings

A system for residential, industrial, commercial and institutional applications.

### Product Description & Applications

Royal Building Products® Electrical Solutions manufactures a complete line of Rigid PVC Conduit pipe and fittings for electrical applications. Our products are designed to reduce labour and maintenance costs, while offering superior performance.

Products are certified by the Canadian Standards Association (CSA) and Underwriters Laboratories (UL) for use in above and below ground applications. Our Rigid PVC conduit pipe and fittings are available in 12 to 150mm (½- to 6-inch) diameters and 3- or 6-metre (10- or 20-foot) lengths.

### Standards and Codes

Royal Electrical Solutions Rigid PVC Conduit pipe and fittings are certified to CSA Standards as noted below. Our Rigid PVC conduit pipe and fittings shall be installed according to the Canadian Electrical Code (CEC) Part I, Rules 12-1100 - 12-1122 and the National Electrical Code (NEC) Article 352.

| Pipe | Fittings |
|---|---|
| C22.2 No. 211.2 | C22.2<br>No. 18.2, 85 (Boxes)<br>No. 40 (Electrical Encl.)<br>No. 42.1 (Covers)<br>No. 85 (Fittings) |
| UL 651 | UL 514C (Boxes)<br>UL 50 (Electrical Encl.)<br>UL 514D (Covers)<br>UL 651 (Fittings) |
| Conforms to NEMA TC2 | |





### Features and Benefits

#### Saves Labour

Rigid PVC Conduit pipe and fittings are easy to install, cut and join.

#### Easy Wire Pulls

The conduit's smooth interior surface reduces friction and prevents damage to wires when pulling wire and conductors for long runs and even through 90° bends.

#### Lightweight Materials

Rigid PVC Conduit is easier to move and handle because it is approximately one-fifth the weight of steel and half the weight of aluminum.

**Approximate Weight Comparison**

| Size mm (in) | PVC lb/100ft (kg/m) | Aluminum lb/100ft (kg/m) | Steel lb/100ft (kg/m) |
|---|---|---|---|
| 12 (½) | 16.1 (0.24) | 27 (0.40) | 79 (1.20) |
| 19 (¾) | 21.5 (0.32) | 37 (0.55) | 105 (1.55) |
| 25 (1) | 31.9 (0.47) | 53 (0.80) | 153 (2.30) |
| 32 (1¼) | 43.8 (0.65) | 70 (1.05) | 201 (3.00) |
| 38 (1½) | 52.3 (0.78) | 86 (1.30) | 249 (3.70) |
| 50 (2) | 70.3 (1.05) | 116 (1.75) | 334 (5.00) |
| 63 (2½) | 112.0 (1.61) | 183 (2.75) | 527 (7.85) |
| 75 (3) | 146.7 (2.18) | 239 (3.55) | 690 (10.25) |
| 90 (3½) | 176.4 (2.63) | 288 (4.30) | 831 (12.40) |
| 100 (4) | 208.9 (3.11) | 340 (5.10) | 982 (14.60) |
| 125 (5) | 283.4 (4.22) | 465 (6.90) | 1,344 (20.40) |
| 150 (6) | 368.0 (5.48) | 613 (9.10) | 1,771 (26.35) |

#### Simplifies Direct Burial

Royal Electrical Solutions Rigid PVC Conduit does not require additional protection for direct burial installations according to the Canadian Electrical Code (CEC) and the National Electrical Code (NEC). Normal construction practices should be followed for trenching and backfill operations.

#### Non-Conductive

Rigid PVC Conduit is non-conductive.

#### Long Life

Royal Rigid PVC Conduit and fittings resist acids, alkalis, salt solutions and most other chemicals. (Refer to the Royal Chemical Resistance Guide for detailed information.) There is no risk of corrosion when exposed to naturally corrosive soil conditions, electrochemical or galvanic environments. Royal's Rigid PVC Conduit has achieved sunlight resistance as per the requirements of the Electrical Code.

#### FT-4 Rating

Rigid PVC Conduit pipe has an FT-4 Rating and can be used in non-combustible construction as per Part 3 of the National Building Code of Canada (NBC).

## Installation Guidelines

### Cutting

Royal Rigid PVC Conduit can easily be cut with a hacksaw, a fine-toothed handsaw or PVC conduit cutters. For conduit with more than a 50mm (2-inch) diameter, use a mitre box or saw guide to ensure a square cut. Deburr the end using a knife or file.

### Bending

It may be necessary to create bends in the field by heating and deforming Rigid PVC Conduit. To accomplish this, the following guidelines should be followed:

• For heating the Rigid PVC Conduit, use a heat gun or some other flameless heat source. Do not use an open flame to heat the conduit. Rigid PVC Conduit must be heated to approximately 127°C (260°F) in order to bend without kinking.

• Heat a length of conduit equal to approximately 10 times the nominal diameter.

• Once the Rigid PVC Conduit has been adequately heated, bend it to the required angle plus 3 extra degrees. The additional angle will accommodate the "spring back" which will occur during cooling.

• After bending of the conduit is completed, immediately cool the bend using water or cold air.

• According to the Canadian Electrical Code (CEC) and the National Electrical Code (NEC), the minimum bending radius for rigid conduit is as shown in the table below.

| Nominal Size mm (in) | Min. Radius to Centre of Conduit or Tubing mm (in) |
|---|---|
| 16 (½) | 102 (4.016) |
| 21 (¾) | 114 (4.489) |
| 27 (1) | 146 (5.748) |
| 35 (1¼) | 184 (7.244) |
| 41 (1½) | 210 (8.268) |
| 53 (2) | 241 (9.488) |
| 63 (2½) | 267 (10.512) |
| 78 (3) | 330 (12.992) |
| 91 (3½) | 381 (14.606) |
| 103 (4) | 406 (15.984) |
| 129 (5) | 610 (24.016) |
| 155 (6) | 762 (30.000) |





### Procedure for Solvent Welding Joints

• Use solvent cement and primer prior to expiration date marked on container.

• Above 0° C ambient temperature, joints may be assembled without the use of primer, provided adequate penetration and softening of the pipe/fitting surface can be achieved with solvent cement alone.

1. Assemble materials for the job, including correct solvent cement, primer and correctly sized applicator.

2. Cut pipe as square as possible using a hand saw and miter box or mechanical saw. Do not use a diagonal cut, as it reduces the bonding area in the joint.

3. If plastic tubing cutters are used, care must be taken to remove any raised bead at the end of the pipe, caused by cutting. A file or reamer may be used to remove the bead.

4. Use a knife, file or reamer to remove burrs from the inside and outside of the pipe end, as these will hinder the integrity of the joint. All sharp edges should be removed from the inside and outside edges of the pipe to prevent the pipe from pushing the solvent cement into the fitting socket, thereby causing a weak spot to form. The pipe end should be chamfered, as shown below.

**Chamfered Pipe**

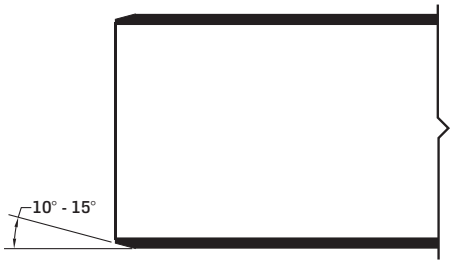

**Procedure for Solvent Welding Joints Continued**

5. All dirt, grease and moisture should be removed from the pipe and socket by thoroughly wiping with a clean, dry cloth.

6. Dry fit pipe and fitting joints prior to cementing. For proper interference fit, the pipe should go easily into the socket approximately ⅓ to ⅔ of the socket depth. If this is not the case, other pipe or fittings should be used.

7. The applicator should be sized according to the size of pipe and fittings being joined. The brush width of the applicator should be equal to approximately ½ of the pipe diameter.

8. Primer is used to penetrate and soften the surfaces so that they will fuse together under a wide variety of conditions. The penetration or softening can be checked by dragging the edge of a knife or sharp object over the coated surface. If a few thousandths of an inch of the primed surface can be scratched or scraped away, proper penetration has occurred. Varying weather conditions affect priming and cementing action and may require more time or repeated applications to either or both surfaces.

9. If using primer, use the correct applicator size (see #7) and aggressively work the primer into the socket, keeping the surface and applicator wet until the surface has softened, re-dipping the applicator as required. When the surface is primed, remove any puddles of primer from the socket.

10. Aggressively work the primer on to the end of the pipe, to a point ½" beyond the depth of the socket.

11. Perform a second application of primer in the socket.

12. While the surfaces are still wet, the appropriate solvent cement should be applied.

13. Using the correct applicator size, aggressively work a full, even layer of cement onto the pipe end to a point equal to the depth of the socket. Do not brush out to a thin paint type layer, as this will dry within a few seconds.

14. Aggressively work a medium layer of cement into the fitting socket; avoid puddling cement in the socket. On the pipe end, do not coat beyond the socket depth or allow cement to run down into the pipe beyond the socket.

15. Apply a second full, even layer of cement on the pipe.

16. Immediately, while the cement is still wet, assemble the joint. Use enough force to ensure that the pipe is fully inserted into the socket. Twist the pipe a ¼ turn as it is being inserted.

17. Hold the joint together for approximately 30 seconds to avoid push out.

18. After assembly, inspect the joint to ensure that there is a ring or bead of cement completely around the juncture of the pipe and socket. If there are voids in this ring, sufficient cement was not applied and the joint may be defective.

19. Remove the excess cement from the pipe and socket (including the ring or bead) using a cloth. Avoid disturbing or moving the joint.

20. Handle newly cemented joints with care until initial set has taken place. Follow set and cure times before handling or testing the system.

**Pipe Dimensions**

| Nominal Size mm (in) | Avg. Outside Diameter mm (in) | Avg. Inside Diameter mm (in) | Avg. Wall Thickness mm (in) | Approx. Weight lb/100ft (kg/m) |
|---|---|---|---|---|
| 12 (½) | 21 (0.840) | 15 (0.608) | 3 (0.116) | 16.1 (0.24) |
| 19 (¾) | 27 (1.050) | 21 (0.810) | 3 (0.120) | 21.5 (0.32) |
| 25 (1) | 33 (1.315) | 26 (1.033) | 4 (0.141) | 31.9 (0.47) |
| 32 (1¼) | 42 (1.660) | 35 (1.362) | 4 (0.149) | 43.8 (0.65) |
| 38 (1½) | 48 (1.900) | 40 (1.592) | 4 (0.154) | 52.3 (0.78) |
| 50 (2) | 60 (2.375) | 52 (2.049) | 4 (0.163) | 70.3 (1.05) |
| 63 (2½) | 73 (2.875) | 62 (2.445) | 5 (0.215) | 112.0 (1.61) |
| 75 (3) | 89 (3.500) | 77 (3.042) | 6 (0.229) | 146.7 (2.18) |
| 90 (3½) | 102 (4.000) | 89 (3.520) | 6 (0.240) | 176.4 (2.63) |
| 100 (4) | 114 (4.500) | 102 (3.998) | 6 (0.251) | 208.9 (3.11) |
| 125 (5) | 141 (5.565) | 127 (5.017) | 7 (0.274) | 283.4 (4.22) |
| 150 (6) | 168 (6.625) | 153 (6.031) | 8 (0.297) | 368.0 (5.48) |

**Specification**

All wiring shall be installed in Royal Electrical Solutions Rigid PVC Conduit and secured with proper fittings. All conduit and fittings shall be manufactured by Royal Building Products, Pipe & Fittings Solutions. All outlets, pull boxes and junction points shall be Royal products.

Exposed conduit shall be securely attached and supported with straps that are installed at the recommended spacing specified in CEC Section 12-1114. The straps must allow for linear expansion and contraction of the conduit due to temperature change. If the variance in temperature exceeds 14°C (25°F), expansion joints shall be installed according to the manufacturer's recommendations.

If Rigid PVC Conduit is embedded in concrete or direct buried, support straps are not required.

### Solvent Cementing

All connections should be made using and applying Royal Electrical Solutions solvent cement.

### Set Times

| Average Initial Set Times | | | |
|---|---|---|---|
| Temperature Range | Pipe Sizes ½" to 1¼" | Pipe Sizes 1½" to 2" | Pipe Sizes 2½" to 6" |
| 15°C to 40°C | 2 min. | 5 min. | 30 min. |
| 5°C to 15°C | 5 min. | 10 min. | 2 hrs. |
| -16°C to 5°C | 10 min. | 15 min. | 12 hrs. |

### Joint Cure Schedule

| Average Joint Cure Times | | | |
|---|---|---|---|
| Temperature Range During Assembly & Cure Periods | Pipe Sizes ½" to 1¼" | Pipe Sizes 1½" to 2" | Pipe Sizes 2½" to 6" |
| 15°C to 40°C | 2 min. | 5 min. | 30 min. |
| 5°C to 15°C | 5 min. | 10 min. | 2 hrs. |
| -16°C to 5°C | 10 min. | 15 min. | 12 hrs. |

In damp or humid weather allow 50% more cure time.

### Estimated Solvent Cement Requirements

| Average Number of Joints per Litre of Solvent Cement | | | | | | | | | |
|---|---|---|---|---|---|---|---|---|---|
| Pipe/Fitting Diameter | ½" | ¾" | 1" | 1½" | 2" | 2½" | 3" | 4" | 6" |
| Number of Joints | 300 | 200 | 125 | 90 | 60 | 40 | 40 | 30 | 10 |

### Estimated Primer Requirements

| Average Number of Joints per Litre of Primer | | | | | | | | | |
|---|---|---|---|---|---|---|---|---|---|
| Pipe/Fitting Diameter | ½" | ¾" | 1" | 1½" | 2" | 2½" | 3" | 4" | 6" |
| Number of Joints | 600 | 400 | 250 | 180 | 120 | 80 | 80 | 60 | 20 |

### Solvent Cementing in Cold Weather:

- Store pipe and fittings in a heated area. Prefabricate as much of the system as possible in a heated area.
- When not in use, store sealed solvent cement and primer between 5°C and 21°C. Do not use open flame or electric heaters to warm cements and primers.
- Take care to remove moisture, ice and snow from the mating surfaces.

### Solvent Cementing in Hot Weather:

- At the time of assembly, the surface temperature of the mating surfaces should not exceed 45°C. Shade or shelter the joint surfaces from direct sunlight for at least 1 hour prior to joining and during the joining process. If necessary, swab the mating surfaces with clean, wet rags to reduce the surface temperature (thoroughly dry surfaces before applying primer or cement).
- Make joints during the cooler early morning hours.
- Apply cement quickly and join pipe to fitting as quickly as possible after applying the cement.
- Keep solvent cement container closed or covered when not in use, to minimize solvent loss.

### Solvent Cementing in Wet Conditions:

- Mating surfaces must be dry when the joint is made.
- Work under a cover or canopy to keep rain off pipe and fittings.
- Work quickly after drying the pipe and fitting to avoid condensation.
- Allow a longer cure time before the system is tested or used.

### Storage and Handling of Solvent Cement and Primer:

- Solvent cement and primer contain highly flammable solvents. Follow all specific safety precautions provided on container label and Material Safety Data Sheet.
- Keep primer and solvent cement away from heat, sparks and open flame.
- Keep containers tightly closed except when in use.
- Ensure proper ventilation of work area and avoid inhaling solvent vapours.
- Where the possibility of splashing exists, wear proper eye protection or a face shield.
- Avoid contact with skin.

### Support Straps

Rigid PVC conduit must be supported with straps when installed in above ground applications. These straps should be installed snugly, while allowing linear movement of the conduit. See the table below for recommended maximum spacing of support straps.

| Maximum Recommended Spacing of Support Straps | | |
|---|---|---|
| Nominal Size mm (in) | CEC Recommended Spacing ft (m) | NEC Recommended Spacing ft (m) |
| 16 (½) | 2½ (0.75) | 3 (0.91) |
| 21 (¾) | 2½ (0.75) | 3 (0.91) |
| 27 (1) | 2½ (0.75) | 3 (0.91) |
| 35 (1¼) | 4 (1.20) | 5 (1.50) |
| 41 (1½) | 4 (1.20) | 5 (1.50) |
| 53 (2) | 6 (1.80) | 5 (1.50) |
| 63 (2½) | 6 (1.80) | 3 - 6 (1.80) |
| 78 (3)-129 (5) | 7 (2.10) | 3½ - 5 (2.10) |
| 155 (6) | 8 (2.50) | 8 (2.50) |

# Rigid PVC Conduit Pipe & Fittings

A system for residential, industrial, commercial and institutional applications.







ROYAL® Electrical Solutions

ROYAL Electrical Solutions

# Table of Contents




| | |
|---|---|
| Product Description - Features and Benefits | 1 |
| Installation Guidelines - Solvent Welding Joints | 2 |
| Solvent Welding Joints/Pipe Dimensions/Specs | 3 |
| Solvent Cementing | 4 |
| Expansion and Contraction | 5 |
| Setting the Piston Opening | 6 |
| Fittings - Bends (Bell End) | 7-8 |
| Fittings - Miscellaneous | 9-18 |


**Note:** This brochure is not intended to assume the authority of the Design Engineer. Actual jobsite conditions will vary significantly. The sole responsibility for all design and installation decisions lies with the Design Engineer. All local health and safety regulations must be followed.

# Rigid PVC Conduit Pipe & Fittings

A system for residential, industrial, commercial and institutional applications.

### Product Description & Applications

Royal Building Products® Electrical Solutions manufactures a complete line of Rigid PVC Conduit pipe and fittings for electrical applications. Our products are designed to reduce labour and maintenance costs, while offering superior performance.

Products are certified by the Canadian Standards Association (CSA) and Underwriters Laboratories (UL) for use in above and below ground applications. Our Rigid PVC conduit pipe and fittings are available in 12 to 150mm (½- to 6-inch) diameters and 3- or 6-metre (10- or 20-foot) lengths.

### Standards and Codes

Royal Electrical Solutions Rigid PVC Conduit pipe and fittings are certified to CSA Standards as noted below. Our Rigid PVC conduit pipe and fittings shall be installed according to the Canadian Electrical Code (CEC) Part I, Rules 12-1100 - 12-1122 and the National Electrical Code (NEC) Article 352.

| Pipe | Fittings |
|---|---|
| C22.2 No. 211.2 | C22.2<br>No. 18.2, 85 (Boxes)<br>No. 40 (Electrical Encl.)<br>No. 42.1 (Covers)<br>No. 85 (Fittings) |
| UL 651 | UL 514C (Boxes)<br>UL 50 (Electrical Encl.)<br>UL 514D (Covers)<br>UL 651 (Fittings) |
| Conforms to NEMA TC2 | |





### Features and Benefits

#### Saves Labour

Rigid PVC Conduit pipe and fittings are easy to install, cut and join.

#### Easy Wire Pulls

The conduit's smooth interior surface reduces friction and prevents damage to wires when pulling wire and conductors for long runs and even through 90° bends.

#### Lightweight Materials

Rigid PVC Conduit is easier to move and handle because it is approximately one-fifth the weight of steel and half the weight of aluminum.

**Approximate Weight Comparison**

| Size mm (in) | PVC lb/100ft (kg/m) | Aluminum lb/100ft (kg/m) | Steel lb/100ft (kg/m) |
|---|---|---|---|
| 12 (½) | 16.1 (0.24) | 27 (0.40) | 79 (1.20) |
| 19 (¾) | 21.5 (0.32) | 37 (0.55) | 105 (1.55) |
| 25 (1) | 31.9 (0.47) | 53 (0.80) | 153 (2.30) |
| 32 (1¼) | 43.8 (0.65) | 70 (1.05) | 201 (3.00) |
| 38 (1½) | 52.3 (0.78) | 86 (1.30) | 249 (3.70) |
| 50 (2) | 70.3 (1.05) | 116 (1.75) | 334 (5.00) |
| 63 (2½) | 112.0 (1.61) | 183 (2.75) | 527 (7.85) |
| 75 (3) | 146.7 (2.18) | 239 (3.55) | 690 (10.25) |
| 90 (3½) | 176.4 (2.63) | 288 (4.30) | 831 (12.40) |
| 100 (4) | 208.9 (3.11) | 340 (5.10) | 982 (14.60) |
| 125 (5) | 283.4 (4.22) | 465 (6.90) | 1,344 (20.40) |
| 150 (6) | 368.0 (5.48) | 613 (9.10) | 1,771 (26.35) |

#### Simplifies Direct Burial

Royal Electrical Solutions Rigid PVC Conduit does not require additional protection for direct burial installations according to the Canadian Electrical Code (CEC) and the National Electrical Code (NEC). Normal construction practices should be followed for trenching and backfill operations.

#### Non-Conductive

Rigid PVC Conduit is non-conductive.

#### Long Life

Royal Rigid PVC Conduit and fittings resist acids, alkalis, salt solutions and most other chemicals. (Refer to the Royal Chemical Resistance Guide for detailed information.) There is no risk of corrosion when exposed to naturally corrosive soil conditions, electrochemical or galvanic environments. Royal's Rigid PVC Conduit has achieved sunlight resistance as per the requirements of the Electrical Code.

#### FT-4 Rating

Rigid PVC Conduit pipe has an FT-4 Rating and can be used in non-combustible construction as per Part 3 of the National Building Code of Canada (NBC).

## Installation Guidelines

### Cutting

Royal Rigid PVC Conduit can easily be cut with a hacksaw, a fine-toothed handsaw or PVC conduit cutters. For conduit with more than a 50mm (2-inch) diameter, use a mitre box or saw guide to ensure a square cut. Deburr the end using a knife or file.

### Bending

It may be necessary to create bends in the field by heating and deforming Rigid PVC Conduit. To accomplish this, the following guidelines should be followed:

• For heating the Rigid PVC Conduit, use a heat gun or some other flameless heat source. Do not use an open flame to heat the conduit. Rigid PVC Conduit must be heated to approximately 127°C (260°F) in order to bend without kinking.

• Heat a length of conduit equal to approximately 10 times the nominal diameter.

• Once the Rigid PVC Conduit has been adequately heated, bend it to the required angle plus 3 extra degrees. The additional angle will accommodate the "spring back" which will occur during cooling.

• After bending of the conduit is completed, immediately cool the bend using water or cold air.

• According to the Canadian Electrical Code (CEC) and the National Electrical Code (NEC), the minimum bending radius for rigid conduit is as shown in the table below.

| Nominal Size mm (in) | Min. Radius to Centre of Conduit or Tubing mm (in) |
|---|---|
| 16 (½) | 102 (4.016) |
| 21 (¾) | 114 (4.489) |
| 27 (1) | 146 (5.748) |
| 35 (1¼) | 184 (7.244) |
| 41 (1½) | 210 (8.268) |
| 53 (2) | 241 (9.488) |
| 63 (2½) | 267 (10.512) |
| 78 (3) | 330 (12.992) |
| 91 (3½) | 381 (14.606) |
| 103 (4) | 406 (15.984) |
| 129 (5) | 610 (24.016) |
| 155 (6) | 762 (30.000) |





### Procedure for Solvent Welding Joints

• Use solvent cement and primer prior to expiration date marked on container.

• Above 0° C ambient temperature, joints may be assembled without the use of primer, provided adequate penetration and softening of the pipe/fitting surface can be achieved with solvent cement alone.

1. Assemble materials for the job, including correct solvent cement, primer and correctly sized applicator.

2. Cut pipe as square as possible using a hand saw and miter box or mechanical saw. Do not use a diagonal cut, as it reduces the bonding area in the joint.

3. If plastic tubing cutters are used, care must be taken to remove any raised bead at the end of the pipe, caused by cutting. A file or reamer may be used to remove the bead.

4. Use a knife, file or reamer to remove burrs from the inside and outside of the pipe end, as these will hinder the integrity of the joint. All sharp edges should be removed from the inside and outside edges of the pipe to prevent the pipe from pushing the solvent cement into the fitting socket, thereby causing a weak spot to form. The pipe end should be chamfered, as shown below.

**Chamfered Pipe**

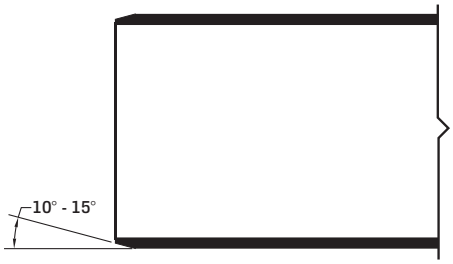

**Procedure for Solvent Welding Joints Continued**

5. All dirt, grease and moisture should be removed from the pipe and socket by thoroughly wiping with a clean, dry cloth.

6. Dry fit pipe and fitting joints prior to cementing. For proper interference fit, the pipe should go easily into the socket approximately ⅓ to ⅔ of the socket depth. If this is not the case, other pipe or fittings should be used.

7. The applicator should be sized according to the size of pipe and fittings being joined. The brush width of the applicator should be equal to approximately ½ of the pipe diameter.

8. Primer is used to penetrate and soften the surfaces so that they will fuse together under a wide variety of conditions. The penetration or softening can be checked by dragging the edge of a knife or sharp object over the coated surface. If a few thousandths of an inch of the primed surface can be scratched or scraped away, proper penetration has occurred. Varying weather conditions affect priming and cementing action and may require more time or repeated applications to either or both surfaces.

9. If using primer, use the correct applicator size (see #7) and aggressively work the primer into the socket, keeping the surface and applicator wet until the surface has softened, re-dipping the applicator as required. When the surface is primed, remove any puddles of primer from the socket.

10. Aggressively work the primer on to the end of the pipe, to a point ½" beyond the depth of the socket.

11. Perform a second application of primer in the socket.

12. While the surfaces are still wet, the appropriate solvent cement should be applied.

13. Using the correct applicator size, aggressively work a full, even layer of cement onto the pipe end to a point equal to the depth of the socket. Do not brush out to a thin paint type layer, as this will dry within a few seconds.

14. Aggressively work a medium layer of cement into the fitting socket; avoid puddling cement in the socket. On the pipe end, do not coat beyond the socket depth or allow cement to run down into the pipe beyond the socket.

15. Apply a second full, even layer of cement on the pipe.

16. Immediately, while the cement is still wet, assemble the joint. Use enough force to ensure that the pipe is fully inserted into the socket. Twist the pipe a ¼ turn as it is being inserted.

17. Hold the joint together for approximately 30 seconds to avoid push out.

18. After assembly, inspect the joint to ensure that there is a ring or bead of cement completely around the juncture of the pipe and socket. If there are voids in this ring, sufficient cement was not applied and the joint may be defective.

19. Remove the excess cement from the pipe and socket (including the ring or bead) using a cloth. Avoid disturbing or moving the joint.

20. Handle newly cemented joints with care until initial set has taken place. Follow set and cure times before handling or testing the system.

**Pipe Dimensions**

| Nominal Size mm (in) | Avg. Outside Diameter mm (in) | Avg. Inside Diameter mm (in) | Avg. Wall Thickness mm (in) | Approx. Weight lb/100ft (kg/m) |
|---|---|---|---|---|
| 12 (½) | 21 (0.840) | 15 (0.608) | 3 (0.116) | 16.1 (0.24) |
| 19 (¾) | 27 (1.050) | 21 (0.810) | 3 (0.120) | 21.5 (0.32) |
| 25 (1) | 33 (1.315) | 26 (1.033) | 4 (0.141) | 31.9 (0.47) |
| 32 (1¼) | 42 (1.660) | 35 (1.362) | 4 (0.149) | 43.8 (0.65) |
| 38 (1½) | 48 (1.900) | 40 (1.592) | 4 (0.154) | 52.3 (0.78) |
| 50 (2) | 60 (2.375) | 52 (2.049) | 4 (0.163) | 70.3 (1.05) |
| 63 (2½) | 73 (2.875) | 62 (2.445) | 5 (0.215) | 112.0 (1.61) |
| 75 (3) | 89 (3.500) | 77 (3.042) | 6 (0.229) | 146.7 (2.18) |
| 90 (3½) | 102 (4.000) | 89 (3.520) | 6 (0.240) | 176.4 (2.63) |
| 100 (4) | 114 (4.500) | 102 (3.998) | 6 (0.251) | 208.9 (3.11) |
| 125 (5) | 141 (5.565) | 127 (5.017) | 7 (0.274) | 283.4 (4.22) |
| 150 (6) | 168 (6.625) | 153 (6.031) | 8 (0.297) | 368.0 (5.48) |

**Specification**

All wiring shall be installed in Royal Electrical Solutions Rigid PVC Conduit and secured with proper fittings. All conduit and fittings shall be manufactured by Royal Building Products, Pipe & Fittings Solutions. All outlets, pull boxes and junction points shall be Royal products.

Exposed conduit shall be securely attached and supported with straps that are installed at the recommended spacing specified in CEC Section 12-1114. The straps must allow for linear expansion and contraction of the conduit due to temperature change. If the variance in temperature exceeds 14°C (25°F), expansion joints shall be installed according to the manufacturer's recommendations.

If Rigid PVC Conduit is embedded in concrete or direct buried, support straps are not required.

### Solvent Cementing

All connections should be made using and applying Royal Electrical Solutions solvent cement.

### Set Times

| Average Initial Set Times | | | |
|---|---|---|---|
| Temperature Range | Pipe Sizes ½" to 1¼" | Pipe Sizes 1½" to 2" | Pipe Sizes 2½" to 6" |
| 15°C to 40°C | 2 min. | 5 min. | 30 min. |
| 5°C to 15°C | 5 min. | 10 min. | 2 hrs. |
| -16°C to 5°C | 10 min. | 15 min. | 12 hrs. |

### Joint Cure Schedule

| Average Joint Cure Times | | | |
|---|---|---|---|
| Temperature Range During Assembly & Cure Periods | Pipe Sizes ½" to 1¼" | Pipe Sizes 1½" to 2" | Pipe Sizes 2½" to 6" |
| 15°C to 40°C | 2 min. | 5 min. | 30 min. |
| 5°C to 15°C | 5 min. | 10 min. | 2 hrs. |
| -16°C to 5°C | 10 min. | 15 min. | 12 hrs. |

In damp or humid weather allow 50% more cure time.

### Estimated Solvent Cement Requirements

| Average Number of Joints per Litre of Solvent Cement | | | | | | | | | |
|---|---|---|---|---|---|---|---|---|---|
| Pipe/Fitting Diameter | ½" | ¾" | 1" | 1½" | 2" | 2½" | 3" | 4" | 6" |
| Number of Joints | 300 | 200 | 125 | 90 | 60 | 40 | 40 | 30 | 10 |

### Estimated Primer Requirements

| Average Number of Joints per Litre of Primer | | | | | | | | | |
|---|---|---|---|---|---|---|---|---|---|
| Pipe/Fitting Diameter | ½" | ¾" | 1" | 1½" | 2" | 2½" | 3" | 4" | 6" |
| Number of Joints | 600 | 400 | 250 | 180 | 120 | 80 | 80 | 60 | 20 |

### Solvent Cementing in Cold Weather:

- Store pipe and fittings in a heated area. Prefabricate as much of the system as possible in a heated area.
- When not in use, store sealed solvent cement and primer between 5°C and 21°C. Do not use open flame or electric heaters to warm cements and primers.
- Take care to remove moisture, ice and snow from the mating surfaces.

### Solvent Cementing in Hot Weather:

- At the time of assembly, the surface temperature of the mating surfaces should not exceed 45°C. Shade or shelter the joint surfaces from direct sunlight for at least 1 hour prior to joining and during the joining process. If necessary, swab the mating surfaces with clean, wet rags to reduce the surface temperature (thoroughly dry surfaces before applying primer or cement).
- Make joints during the cooler early morning hours.
- Apply cement quickly and join pipe to fitting as quickly as possible after applying the cement.
- Keep solvent cement container closed or covered when not in use, to minimize solvent loss.

### Solvent Cementing in Wet Conditions:

- Mating surfaces must be dry when the joint is made.
- Work under a cover or canopy to keep rain off pipe and fittings.
- Work quickly after drying the pipe and fitting to avoid condensation.
- Allow a longer cure time before the system is tested or used.

### Storage and Handling of Solvent Cement and Primer:

- Solvent cement and primer contain highly flammable solvents. Follow all specific safety precautions provided on container label and Material Safety Data Sheet.
- Keep primer and solvent cement away from heat, sparks and open flame.
- Keep containers tightly closed except when in use.
- Ensure proper ventilation of work area and avoid inhaling solvent vapours.
- Where the possibility of splashing exists, wear proper eye protection or a face shield.
- Avoid contact with skin.

### Support Straps

Rigid PVC conduit must be supported with straps when installed in above ground applications. These straps should be installed snugly, while allowing linear movement of the conduit. See the table below for recommended maximum spacing of support straps.

| Maximum Recommended Spacing of Support Straps | | |
|---|---|---|
| Nominal Size mm (in) | CEC Recommended Spacing ft (m) | NEC Recommended Spacing ft (m) |
| 16 (½) | 2½ (0.75) | 3 (0.91) |
| 21 (¾) | 2½ (0.75) | 3 (0.91) |
| 27 (1) | 2½ (0.75) | 3 (0.91) |
| 35 (1¼) | 4 (1.20) | 5 (1.50) |
| 41 (1½) | 4 (1.20) | 5 (1.50) |
| 53 (2) | 6 (1.80) | 5 (1.50) |
| 63 (2½) | 6 (1.80) | 3 - 6 (1.80) |
| 78 (3)-129 (5) | 7 (2.10) | 3½ - 5 (2.10) |
| 155 (6) | 8 (2.50) | 8 (2.50) |

### Storing Conduit Pipe and Fittings

Store Rigid PVC conduit pipe and fittings at the same temperature. Otherwise they may expand and contract at different rates and become incompatible.

### Maximum Operating Temperatures

According to the Canadian Electrical Code (CEC), Rigid PVC conduit is intended for use at a continuous operating temperature of 75°C (167°F). For US applications, our Rigid PVC conduit is rated for use with 90°C wiring, according to the requirements of the NEC.

### Ambient Temperatures

Royal Electrical Solutions Rigid PVC Conduit and fittings can be installed in locations with an ambient temperature not exceeding 50°C (122°F).

### Expansion Joints

According to the CEC, if the amount of expansion expected due to temperature variance during and after construction is more than 45mm, expansion joints must be used.

### Expected Expansion

The coefficient of linear expansion for Rigid PVC conduit is as follows:

$3 \times 10^{-5}$ in (expansion/contraction) / in (pipe length) /°F (change in temperature),

$5.4 \times 10^{-5}$ mm (expansion/contraction)/mm (pipe length)/°C (change in temperature)





### Note:

The following chart shows the amount of expansion expected with various pipe lengths/temperature changes. If the Rigid PVC Conduit is installed in an exposed location, 17°C (30°F) should be added to the amount of temperature change (ΔT) due to the effects of radiant heat.

**Expansion/Contraction of PVC (mm)**

**Length of Pipe Run (m)**

| ΔT (°C) | 2 | 4 | 6 | 8 | 10 | 12 | 14 | 16 | 18 | 20 |
|---|---|---|---|---|---|---|---|---|---|---|
| 5 | 0.54 | 1.08 | 1.62 | 2.16 | 2.70 | 3.24 | 3.78 | 4.32 | 4.86 | 5.40 |
| 10 | 1.08 | 2.16 | 3.24 | 4.32 | 5.40 | 6.48 | 7.56 | 8.64 | 9.72 | 10.80 |
| 15 | 1.62 | 3.24 | 4.86 | 6.48 | 8.10 | 9.72 | 11.34 | 12.96 | 14.58 | 16.20 |
| 20 | 2.16 | 4.32 | 6.48 | 8.64 | 10.80 | 12.96 | 15.12 | 17.28 | 19.44 | 21.60 |
| 25 | 2.70 | 5.40 | 8.10 | 10.80 | 13.50 | 16.20 | 18.90 | 21.60 | 24.30 | 27.00 |
| 30 | 3.24 | 6.48 | 9.72 | 12.96 | 16.20 | 19.44 | 22.68 | 25.92 | 29.16 | 32.40 |
| 35 | 3.78 | 7.56 | 11.34 | 15.12 | 18.90 | 22.68 | 26.46 | 30.24 | 34.02 | 37.80 |
| 40 | 4.32 | 8.64 | 12.96 | 17.28 | 21.60 | 25.92 | 30.24 | 34.56 | 38.88 | 43.20 |
| 45 | 4.86 | 9.72 | 14.58 | 19.44 | 24.30 | 29.16 | 34.02 | 38.88 | 43.74 | 48.60 |
| 50 | 5.40 | 10.80 | 16.20 | 21.60 | 27.00 | 32.40 | 37.80 | 43.20 | 48.60 | 54.00 |

**Expansion/Contraction of PVC (in)**

**Length of Pipe Run (ft)**

| ΔT (°F) | 5 | 10 | 15 | 20 | 25 | 30 | 35 | 40 | 45 | 50 |
|---|---|---|---|---|---|---|---|---|---|---|
| 5 | 0.01 | 0.02 | 0.03 | 0.04 | 0.05 | 0.05 | 0.06 | 0.07 | 0.08 | 0.09 |
| 10 | 0.02 | 0.04 | 0.05 | 0.07 | 0.09 | 0.11 | 0.13 | 0.14 | 0.16 | 0.18 |
| 15 | 0.03 | 0.05 | 0.08 | 0.11 | 0.14 | 0.16 | 0.19 | 0.22 | 0.24 | 0.27 |
| 20 | 0.04 | 0.07 | 0.11 | 0.14 | 0.18 | 0.22 | 0.25 | 0.29 | 0.32 | 0.36 |
| 25 | 0.05 | 0.09 | 0.14 | 0.18 | 0.23 | 0.27 | 0.32 | 0.36 | 0.41 | 0.45 |
| 30 | 0.05 | 0.11 | 0.16 | 0.22 | 0.27 | 0.32 | 0.38 | 0.43 | 0.49 | 0.54 |
| 35 | 0.06 | 0.13 | 0.19 | 0.25 | 0.32 | 0.38 | 0.44 | 0.50 | 0.57 | 0.63 |
| 40 | 0.07 | 0.14 | 0.22 | 0.29 | 0.36 | 0.43 | 0.50 | 0.58 | 0.65 | 0.72 |
| 45 | 0.08 | 0.16 | 0.24 | 0.32 | 0.41 | 0.49 | 0.57 | 0.65 | 0.73 | 0.81 |
| 50 | 0.09 | 0.18 | 0.27 | 0.36 | 0.45 | 0.54 | 0.63 | 0.72 | 0.81 | 0.90 |

### Required Number of Expansion Joints

The following table shows the amount of travel that is available with each trade size of Royal Electrical Solutions Rigid PVC conduit expansion joints:

| Part Number | Description in | Travel Allowance mm (in) |
|---|---|---|
| REJ10 | ½" Expansion Joint | 102 (4) |
| REJ15 | ¾" Expansion Joint | 102 (4) |
| REJ20 | 1" Expansion Joint | 102 (4) |
| REJ25 | 1¼" Expansion Joint | 102 (4) |
| REJ30 | 1½" Expansion Joint | 102 (4) |
| REJ35 | 2" Expansion Joint | 102 (4) |
| REJ40 | 2½" Expansion Joint | 102 (4) |
| REJ45 | 3" Expansion Joint | 204 (8) |
| REJ50 | 3½" Expansion Joint | 204 (8) |
| REJ55 | 4" Expansion Joint | 204 (8) |
| REJ60 | 5" Expansion Joint | 204 (8) |
| REJ65 | 6" Expansion Joint | 204 (8) |

The required number of expansion joints can be calculated using the following formula:

$$\#\ \text{Expansion Joints Required} = \frac{\text{Total Expected Amount of Expansion (in)}}{\text{Expansion Joint Travel Allowance (in)}}$$

$$\#\ \text{Expansion Joints Required} = \frac{\text{Total Expected Amount of Expansion (mm)}}{\text{Expansion Joint Travel Allowance (mm)}}$$

The number of expansion joints calculated above should be rounded up to the nearest whole number.

### Setting the Piston Opening

Expansion joints must be installed such that they allow for both expansion and contraction of the conduit. The piston of the expansion joint must be set at the correct position to allow for this linear movement. To determine the correct position for the piston at the time and temperature of installation, the following formula should be used:

$$\text{Piston Setting (in)} = \frac{\text{(Max. Temp. (°F) – Install. Temp. (°F))}}{\text{Total Expected Temperature Change (°F)}} \times \left[\text{Expansion Joint Expansion Allow. (in)}\right]$$

$$\text{Piston Setting (mm)} = \frac{\text{(Max. Temp. (°C) – Install. Temp. (°C))}}{\text{Total Expected Temperature Change (°C)}} \times \left[\text{Expansion Joint Expansion Allow. (mm)}\right]$$

### Installation Guidelines

• Securely fasten the expansion joint barrel so that it does not shift. Loosely connect the conduit so that it is free to move.

• To function properly, expansion joints should be installed near a fixed point.

• It is better to use more expansion joints than not enough, since problems are difficult to correct after conductors and wires have been pulled through the conduit.

• Ensure that the barrel and piston are aligned and level.

• For vertical installations of expansion joints, install with the piston at the bottom to prevent dirt and water from getting inside the joint and causing it to malfunction.

### Installation Example

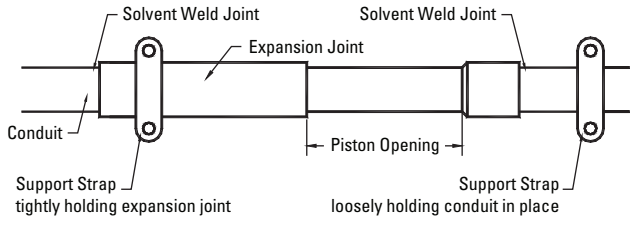


**If one expansion joint is required:**
Securely fasten the barrel of the expansion joint close to one of the boxes. Support the conduit with straps, but allow free movement of the conduit for expansion and contraction. (See Drawing 1)

**If two expansion joints are required:**
**There are two options available:**

1. Firmly fasten one expansion joint near each end of the run and firmly fasten the conduit at the centre. Support the rest of the conduit with straps allowing for movement of the conduit. (See Drawing 2)

2. Firmly fasten the expansion joints back-to-back at the centre of the run. The conduit should be supported with straps to allow free movements as it expands and contracts. (See Drawing 3)

**If three or more expansion joints are required:**
Evenly space the expansion joints along the run of Rigid PVC conduit. Tightly fasten each expansion joint and support the conduit with straps. Do not restrict the movement of the conduit.

*For information on Maximum Recommended Spacing of Support Straps, see page 4.

### Drawings 1 - 4

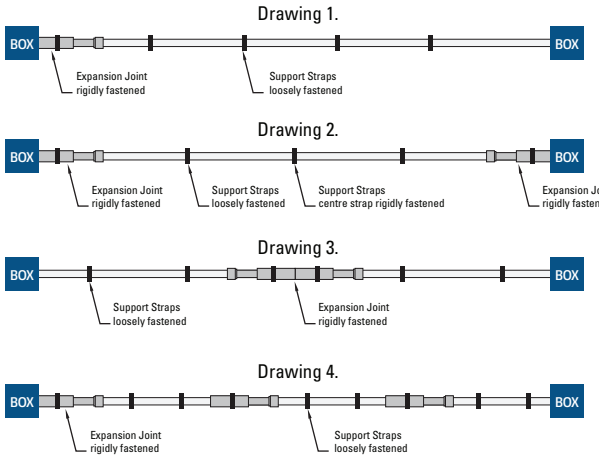

FITTINGS - Bends (Bell Ends)

| 90° Elbows - Bell End | Sizes (in) | Product Code | UPC Number | Diameter (D) (in) | Length (L) (in) | Radius (R) (in) |
|---|---|---|---|---|---|---|
| 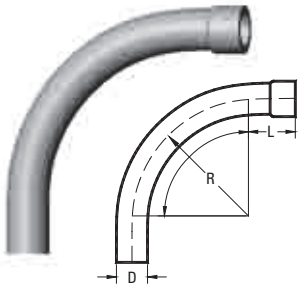 | ½ | REE1090 | 46120 | 0.840 | 1.500 | 4.00 |
| | ¾ | REE1590 | 46150 | 1.050 | 1.500 | 4.50 |
| | 1 | REE2090 | 46180 | 1.315 | 1.875 | 5.75 |
| | 1¼ | REE2590 | 46210 | 1.660 | 2.000 | 7.25 |
| | 1½ | REE3090 | 46240 | 1.900 | 2.000 | 8.25 |
| | 2 | REE3590 | 46270 | 2.375 | 2.000 | 9.50 |
| | 2½ | REE4090 | 46330 | 2.875 | 3.000 | 10.50 |
| | 3 | REE4590 | 46360 | 3.500 | 3.125 | 13.00 |
| | 3½ | REE5090 | 46390 | 4.000 | 3.250 | 15.00 |
| | 4 | REE5590 | 46420 | 4.500 | 3.375 | 16.00 |
| | 5 | REE6090 | 46440 | 5.565 | 3.622 | 24.00 |
| | 6 | REE6590 | 46460 | 6.625 | 3.740 | 30.00 |

| 45° Elbows - Bell End | Sizes (in) | Product Code | UPC Number | Diameter (D) (in) | Length (L) (in) | Radius (R) (in) |
|---|---|---|---|---|---|---|
| 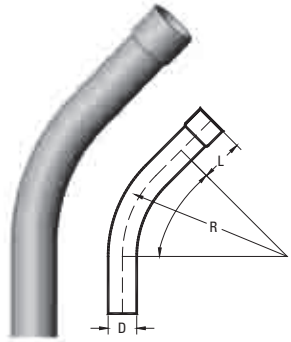 | ½ | REE1045 | 46120 | 0.840 | 1.500 | 4.00 |
| | ¾ | REE1545 | 46150 | 1.050 | 1.500 | 4.50 |
| | 1 | REE2045 | 46180 | 1.315 | 1.875 | 5.75 |
| | 1¼ | REE2545 | 46210 | 1.660 | 2.000 | 7.25 |
| | 1½ | REE3045 | 46240 | 1.900 | 2.000 | 8.25 |
| | 2 | REE3545 | 46270 | 2.375 | 2.000 | 9.50 |
| | 2½ | REE4045 | 46330 | 2.875 | 3.000 | 10.50 |
| | 3 | REE4545 | 46360 | 3.500 | 3.125 | 13.00 |
| | 3½ | REE5045 | 46390 | 4.000 | 3.250 | 15.00 |
| | 4 | REE5545 | 46420 | 4.500 | 3.375 | 16.00 |
| | 5 | REE6045 | 46440 | 5.565 | 3.625 | 24.00 |
| | 6 | REE6545 | 46460 | 6.625 | 3.750 | 30.00 |

| 30° Elbows - Bell End | Sizes (in) | Product Code | UPC Number | Diameter (D) (in) | Length (L) (in) | Radius (R) (in) |
|---|---|---|---|---|---|---|
| 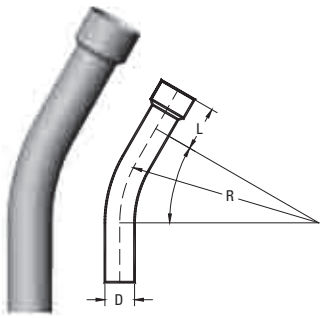 | ½ | REE1030 | 46100 | 0.840 | 1.500 | 4.00 |
| | ¾ | REE1530 | 46130 | 1.050 | 1.500 | 4.50 |
| | 1 | REE2030 | 46160 | 1.315 | 1.875 | 5.75 |
| | 1¼ | REE2530 | 46190 | 1.660 | 2.000 | 7.25 |
| | 1½ | REE3030 | 46220 | 1.900 | 2.000 | 8.25 |
| | 2 | REE3530 | 46274 | 2.375 | 2.000 | 9.50 |
| | 2½ | REE4030 | 46310 | 2.875 | 3.000 | 10.50 |
| | 3 | REE4530 | 46340 | 3.500 | 3.125 | 13.00 |
| | 3½ | REE5030 | 46375 | 4.000 | 3.250 | 15.00 |
| | 4 | REE5530 | 46400 | 4.500 | 3.375 | 16.00 |
| | 5 | REE6030 | 46425 | 5.565 | 3.625 | 24.00 |
| | 6 | REE6530 | 46442 | 6.625 | 3.750 | 30.00 |

| Utilities 90° Elbows - Bell End | Sizes (in) | Product Code | UPC Number | Diameter (D) (in) | Length (L) (in) | Radius (R) (in) |
|---|---|---|---|---|---|---|
| 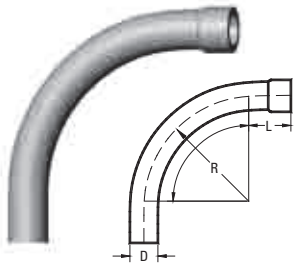 | 2 | REE2-24 | 46501 | 2.375 | 41.20 | 24.00 |
| | 2 | REE2-36 | 46502 | 2.375 | 31.70 | 36.00 |
| | 3 | REE3-24 | 46503 | 3.500 | 41.20 | 24.00 |
| | 3 | REE3-36 | 46504 | 3.500 | 31.70 | 36.00 |
| | 4 | REE4-36 | 46465 | 4.500 | 31.70 | 36.00 |
| | 4 | REE4-48 | 46505 | 4.500 | 31.70 | 48.00 |
| | 5 | REE5-36 | 46506 | 5.565 | 31.70 | 36.00 |
| | 6 | REE6-36 | 46507 | 6.625 | 31.70 | 36.00 |

Fittings - Bends (Plain Ends)

| 90° Elbows - Plain End | Sizes (in) | Product Code | UPC Number | Diameter (D) (in) | Length (L) (in) | Radius (R) (in) |
|---|---|---|---|---|---|---|
| 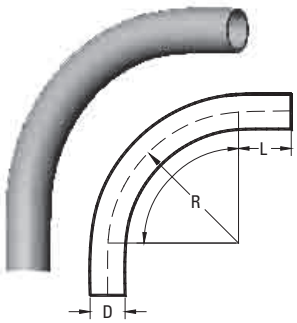 | ½ | REE1090PE | 46120 | 0.840 | 1.500 | 4.00 |
| | ¾ | REE1590PE | 46150 | 1.050 | 1.500 | 4.50 |
| | 1 | REE2090PE | 46180 | 1.315 | 1.875 | 5.75 |
| | 1¼ | REE2590PE | 46210 | 1.660 | 2.000 | 7.25 |
| | 1½ | REE3090PE | 46240 | 1.900 | 2.000 | 8.25 |
| | 2 | REE3590PE | 46270 | 2.375 | 2.000 | 9.50 |
| | 2½ | REE4090PE | 46330 | 2.875 | 3.000 | 10.50 |
| | 3 | REE4590PE | 46360 | 3.500 | 3.125 | 13.00 |
| | 3½ | REE5090PE | 46390 | 4.000 | 3.250 | 15.00 |
| | 4 | REE5590PE | 46420 | 4.500 | 3.375 | 16.00 |
| | 5 | REE6090PE | 46440 | 5.565 | 3.622 | 24.00 |
| | 6 | REE6590PE | 46460 | 6.625 | 3.740 | 30.00 |

| 45° Elbows - Plain End | Sizes (in) | Product Code | UPC Number | Diameter (D) (in) | Length (L) (in) | Radius (R) (in) |
|---|---|---|---|---|---|---|
| 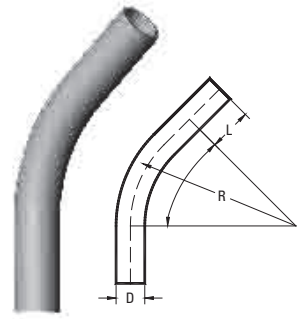 | ½ | REE1045PE | 46110 | 0.840 | 1.500 | 4.00 |
| | ¾ | REE1545PE | 46140 | 1.050 | 1.500 | 4.50 |
| | 1 | REE2045PE | 46170 | 1.315 | 1.875 | 5.75 |
| | 1¼ | REE2545PE | 46200 | 1.660 | 2.000 | 7.25 |
| | 1½ | REE3045PE | 46230 | 1.900 | 2.000 | 8.25 |
| | 2 | REE3545PE | 46280 | 2.375 | 2.000 | 9.50 |
| | 2½ | REE4045PE | 46320 | 2.875 | 3.000 | 10.50 |
| | 3 | REE4545PE | 46350 | 3.500 | 3.125 | 13.00 |
| | 3½ | REE5045PE | 46380 | 4.000 | 3.250 | 15.00 |
| | 4 | REE5545PE | 46415 | 4.500 | 3.375 | 16.00 |
| | 5 | REE6045PE | 46430 | 5.565 | 3.622 | 24.00 |
| | 6 | REE6545PE | 46450 | 6.625 | 3.740 | 30.00 |

| 30° Elbows - Plain End | Sizes (in) | Product Code | UPC Number | Diameter (D) (in) | Length (L) (in) | Radius (R) (in) |
|---|---|---|---|---|---|---|
| 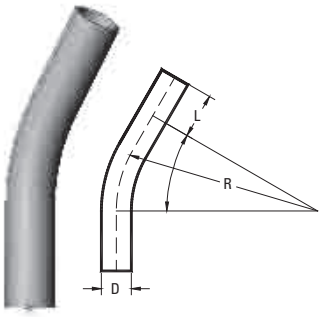 | ½ | REE1030PE | 46100 | 0.840 | 1.500 | 4.00 |
| | ¾ | REE1530PE | 46130 | 1.050 | 1.500 | 4.50 |
| | 1 | REE2030PE | 46160 | 1.315 | 1.875 | 5.75 |
| | 1¼ | REE2530PE | 46190 | 1.660 | 2.000 | 7.25 |
| | 1½ | REE3030PE | 46220 | 1.900 | 2.000 | 8.25 |
| | 2 | REE3530PE | 46274 | 2.375 | 2.000 | 9.50 |
| | 2½ | REE4030PE | 46310 | 2.875 | 3.000 | 10.50 |
| | 3 | REE4530PE | 46340 | 3.500 | 3.125 | 13.00 |
| | 3½ | REE5030PE | 46375 | 4.000 | 3.250 | 15.00 |
| | 4 | REE5530PE | 46400 | 4.500 | 3.375 | 16.00 |
| | 5 | REE6030PE | 46425 | 5.565 | 3.622 | 24.00 |
| | 6 | REE6530PE | 46442 | 6.625 | 3.740 | 30.00 |

| 45° Elbows - Extended Plain End | Sizes (in) | Product Code | UPC Number | Diameter (D) (in) | Length (L) (in) | Radius (R) (in) |
|---|---|---|---|---|---|---|
| 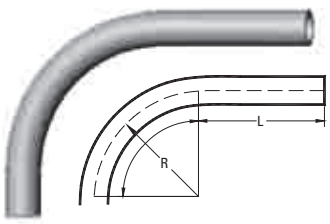 | 1¼ | REE2590E | 46125 | 1.660 | 14.750 | 7.25 |
| | 1½ | REE3090E | 46260 | 1.900 | 14.750 | 8.25 |
| | 2 | REE3590E | 43290 | 2.375 | 14.750 | 9.50 |

## Fittings - Couplings and Adapters

| Couplings | Sizes (in) | Product Code | UPC Number | Outside Diameter (OD) (in) | Inside Diameter (ID) (in) | Length (L) (in) |
|---|---|---|---|---|---|---|
| 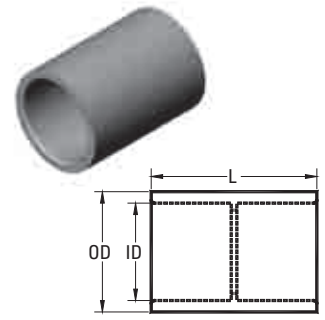 | ½ | REC10 | 45950 | 1.080 | 0.840 | 1.437 |
| | ¾ | REC15 | 45960 | 1.300 | 1.050 | 1.703 |
| | 1 | REC20 | 45970 | 1.590 | 1.315 | 2.031 |
| | 1¼ | REC25 | 45980 | 2.000 | 1.660 | 2.156 |
| | 1½ | REC30 | 45990 | 2.230 | 1.900 | 2.281 |
| | 2 | REC35 | 46000 | 2.720 | 2.375 | 2.406 |
| | 2½ | REC40 | 46010 | 3.320 | 2.875 | 3.187 |
| | 3 | REC45 | 46020 | 4.000 | 3.500 | 3.437 |
| | 3½ | REC50 | 46030 | 4.500 | 4.000 | 3.625 |
| | 4 | REC55 | 46060 | 5.000 | 4.500 | 3.750 |
| | 5 | REC60 | 46080 | 6.120 | 5.565 | 4.187 |
| | 6 | REC65 | 46090 | 7.370 | 6.625 | 4.562 |

| 5° Couplings *(*Fabricated)* | Sizes (in) | Product Code | UPC Number | Outside Diameter (OD) (in) | Inside Diameter (ID) (in) | Length (L) (in) |
|---|---|---|---|---|---|---|
| 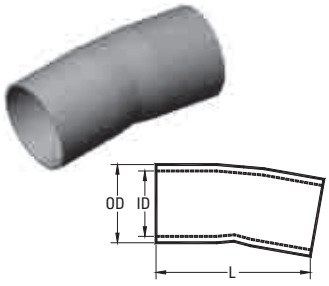 | 2 | R5EC35 | 46800 | 2.375 | 2.049 | 4.0 |
| | 2½ | R5EC40 | 46805 | 3.500 | 2.445 | 5.5 |
| | 3 | R5EC45 | 46810 | 3.500 | 3.042 | 6.0 |
| | 3½ | R5EC50 | 46815 | 4.500 | 3.521 | 7.0 |
| | 4 | R5EC55 | 46820 | 4.500 | 3.998 | 7.0 |
| | 5 | R5EC60 | 46825 | 5.565 | 5.018 | 7.5 |
| | 6 | R5EC65 | 46830 | 6.625 | 6.031 | 11.0 |

| Terminal Adapters (½" - 1¼" Tapered Thread, 6" NPT) | Sizes (in) | Product Code | UPC Number | A (in) | B (in) | Inside Diameter (ID) (in) | Thread (in) |
|---|---|---|---|---|---|---|---|
| 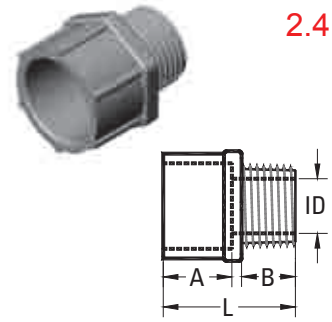 | ½ | RTA10 | 45730 | 0.750 | 0.700 | 0.591 | 1.550 |
| | ¾ | RTA15 | 45740 | 1.000 | 0.675 | 0.790 | 1.750 |
| | 1 | RTA20 | 45750 | 1.115 | 0.625 | 1.000 | 1.860 |
| | 1¼ | RTA25 | 45760 | 1.300 | 0.640 | 1.311 | 2.125 |
| | 1½ | RTA30 | 45770 | 1.425 | 0.725 | 1.530 | 2.250 |
| | 2 | RTA35 | 45780 | 1.150 | 0.800 | 1.970 | 2.100 |
| | 2½ | RTA40 | 45790 | 1.900 | 0.800 | 2.346 | 2.930 |
| | 3 | RTA45 | 45800 | 2.000 | 0.815 | 2.915 | 3.055 |
| | 3½ | RTA50 | 45810 | 1.715 | 1.000 | 3.385 | 3.055 |
| | 4 | RTA55 | 45820 | 1.990 | 0.815 | 3.850 | 3.215 |
| | 5 | RTA60 | 45830 | 2.000 | 1.725 | 5.015 | 5.985 |
| | 6 | RTA65 | 45840 | 2.130 | 1.875 | 6.025 | 6.500 |

| Female Adapters (Npt Tapered Thread) | Sizes (in) | Product Code | UPC Number | A (in) | B (in) | Inside Diameter (ID) (in) | Thread (in) |
|---|---|---|---|---|---|---|---|
| 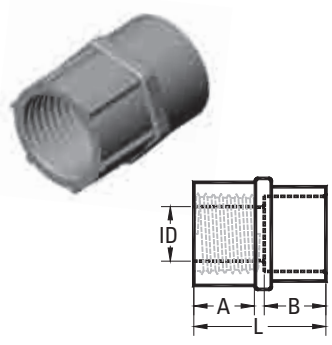 | ½ | RFA10 | 44990 | 0.800 | 0.825 | 0.620 | 1.725 |
| | ¾ | RFA15 | 45000 | 0.800 | 1.000 | 0.820 | 1.900 |
| | 1 | RFA20 | 45010 | 1.000 | 1.200 | 1.065 | 2.300 |
| | 1¼ | RFA25 | 45020 | 1.015 | 1.300 | 1.395 | 2.425 |
| | 1½ | RFA30 | 45030 | 1.050 | 1.290 | 1.575 | 2.440 |
| | 2 | RFA35 | 45040 | 1.075 | 1.375 | 2.050 | 2.550 |
| | 2½ | RFA40 | 45050 | 1.675 | 1.985 | 2.470 | 3.760 |
| | 3 | RFA45 | 45060 | 1.630 | 2.150 | 3.090 | 4.100 |
| | 3½ | RFA50 | 45070 | 1.800 | 2.000 | 3.540 | 3.985 |
| | 4 | RFA55 | 45080 | 1.755 | 2.185 | 4.025 | 4.210 |
| | 5 | RFA60 | 45090 | 2.065 | 3.000 | 5.035 | 5.240 |
| | 6 | RFA65 | 45100 | 2.065 | 3.000 | 6.045 | 5.235 |

## Fittings - Expansions Joints, Straps and Meter Accessories

### Expansion Joints

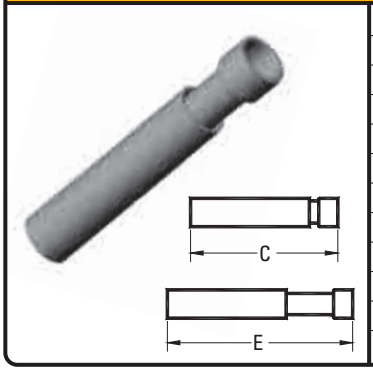


| Sizes (in) | Product Code | UPC Number | Expanded Length (E) (in) | Contracted Length (C) (in) | Travel (in) |
|---|---|---|---|---|---|
| ½ | REJ10 | 44870 | 12.00 | 8.00 | 4.00 |
| ¾ | REJ15 | 44880 | 12.00 | 8.00 | 4.00 |
| 1 | REJ20 | 44890 | 12.50 | 8.50 | 4.00 |
| 1¼ | REJ25 | 44900 | 13.00 | 9.00 | 4.00 |
| 1½ | REJ30 | 44910 | 13.00 | 9.00 | 4.00 |
| 2 | REJ35 | 44920 | 13.25 | 9.25 | 4.00 |
| 2½ | REJ40 | 44930 | 13.25 | 9.25 | 4.00 |
| 3 | REJ45 | 44940 | 22.25 | 14.25 | 8.00 |
| 3½ | REJ50 | 44950 | 22.25 | 14.25 | 8.00 |
| 4 | REJ55 | 44960 | 22.25 | 14.25 | 8.00 |
| 5 | REJ60 | 44963 | 22.25 | 14.25 | 8.00 |
| 6 | REJ65 | 44966 | 22.25 | 14.25 | 8.00 |

### Expansion Joints

| PVC | Sizes (in) | Product No. | UPC No. | PVC Coated Steel | Sizes (in) | Product No. | UPC No. | PVC Coated Steel | Sizes (in) | Product No. | UPC No. |
|---|---|---|---|---|---|---|---|---|---|---|---|
| 2 Hole | ½ | RPS10 | 45540 | 2 Hole | 2 | RCS35 | 44783 | 1 Hole | ½ | RCS10-1 | 46850 |
| | ¾ | RPS15 | 45550 | | 2½ | RCS40 | 44784 | | ¾ | RCS15-1 | 46852 |
| | 1 | RPS20 | 45560 | | 3 | RCS45 | 44785 | | 1 | RCS20-1 | 46854 |
| | 1¼ | RPS25 | 45570 | | 3½ | RCS50 | 44786 | | 1¼ | RCS25-1 | 46856 |
| | 1½ | RPS30 | 45580 | | 4 | RCS55 | 44787 | | 1½ | RCS30-1 | 46858 |
| | 2 | RPS35 | 45590 | | 5 | RCS60 | 44788 | | 2 | RCS35-1 | 46860 |
| | | | | | 6 | RCS65 | 44789 | | 2½ | RCS40-1 | 46862 |
| | | | | | | | | | 3 | RCS10-1 | 46864 |
| | | | | | | | | | 4 | RCS10-1 | 46866 |

### Meter Offsets



| Sizes (in) | Product No. | UPC No. |
|---|---|---|
| 1¼ | RM025 | 45500 |
| 2 | RM035 | 45510 |

### Long Meter Offsets *(Fabricated)*



| Sizes (in) | Product No. | UPC No. |
|---|---|---|
| 1¼ | RLM025 | 45472 |
| 1½ | RML030 | 45474 |
| 2 | RML035 | 45476 |

### Service Entrance Fittings



| Sizes (in) | Product No. | UPC No. |
|---|---|---|
| ½ | REF10 | 44795 |
| ¾ | REF15 | 44800 |
| 1 | REF20 | 44810 |
| 1¼ | REF25 | 44820 |
| 1½ | REF30 | 44830 |
| 2 | REF35 | 44840 |
| 2½ | REF40 | 44842 |
| 3 | REF45 | 44844 |
| 3½ | REF50 | 44852 |
| 4 | REF55 | 44860 |

### Meter Hubs



| Sizes (in) | Product No. | UPC No. |
|---|---|---|
| 1¼ | RMHU25 | 45480 |
| 1½ | RMHU30 | 45485 |
| 2 | RMHU35 | 45490 |

### Expansion & Deflection Fittings Assembly



| Sizes (in) | Product No. | UPC No. |
|---|---|---|
| 2 | RSEJ35 | 46990 |
| 3 | RSEJ45 | 46992 |
| 4 | RSEJ55 | 46994 |

### Ecovoc Solvent Cement *(*c/w Screw Cap & Dauber)*



| Sizes (in) | Product No. | UPC No. | Carton Qty. |
|---|---|---|---|
| 250ml | RVOC250* | 54790 | 24 |
| 475ml | RVOC475* | 54795 | 12 |
| 950ml | RVOC950* | 54797 | 12 |
| 4L | RVOC4L | 54799 | 4 |

### Privoc Solvent Cement *(*c/w Screw Cap & Dauber)*



| Sizes (in) | Product No. | UPC No. | Carton Qty. |
|---|---|---|---|
| 250ml | RVOCPR250* | 54800 | 24 |
| 475ml | RVOCPR475* | 54802 | 12 |
| 950ml | RVOCPR950* | 54804 | 12 |
| 4L | RVOCPR4L | 54806 | 4 |

## Fittings - Access Fittings

| Type C | Sizes (in) | Product Code | UPC Number | A (in) | B (in) | C (in) | D (in) | E (in) |
|---|---|---|---|---|---|---|---|---|
| 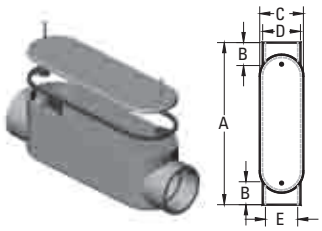 | ½ | RSC10S | 46600 | 5.606 | 0.639 | 1.268 | 1.100 | 0.840 |
| | ¾ | RSC20S | 46605 | 5.606 | 0.810 | 1.536 | 1.325 | 1.050 |
| | 1 | RSC30S | 46610 | 6.500 | 0.910 | 1.700 | 1.600 | 1.335 |
| | 1¼ | RSC40S | 46615 | 7.900 | 1.050 | 2.300 | 2.250 | 1.100 |
| | 1½ | RSC50S | 46620 | 8.500 | 1.125 | 2.675 | 2.250 | 1.900 |
| | 2 | RSC60S | 45605 | 10.875 | 1.160 | 3.188 | 2.820 | 2.375 |
| | 2½ | RSC70S | 45606 | 14.600 | 1.750 | 4.500 | 3.950 | 2.870 |
| | 3 | RSC80S | 45607 | 14.600 | 1.900 | 4.500 | 3.950 | 3.510 |
| | 3½ | RSC90S | 45609 | 17.040 | 2.125 | 5.536 | 5.000 | 4.000 |
| | 4 | RSC100S | 45608 | 17.040 | 2.125 | 5.536 | 5.000 | 4.530 |

| Type LB | Sizes (in) | Product Code | UPC Number | A (in) | B (in) | C (in) | D (in) | E (in) | F (in) | G (in) | H (in) |
|---|---|---|---|---|---|---|---|---|---|---|---|
| 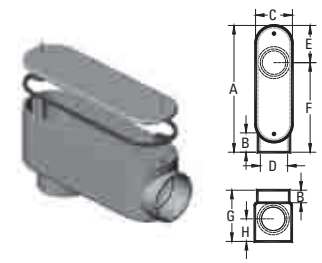 | ½ | RSLB10S | 45620 | 4.337 | 0.639 | 1.268 | 0.840 | 1.297 | 4.095 | 2.487 | 1.005 |
| | ¾ | RSLB20S | 45630 | 5.395 | 0.810 | 1.536 | 1.050 | 1.297 | 4.095 | 2.487 | 1.005 |
| | 1 | RSLB30S | 45640 | 6.250 | 0.910 | 1.700 | 1.335 | 1.500 | 4.750 | 2.075 | 1.125 |
| | 1¼ | RSLB40S | 45650 | 7.625 | 1.050 | 2.300 | 1.100 | 1.750 | 5.750 | 3.575 | 1.562 |
| | 1½ | RSLB50S | 45660 | 8.250 | 1.125 | 2.675 | 1.900 | 1.750 | 6.500 | 3.938 | 1.656 |
| | 2 | RSLB60S | 45670 | 10.531 | 1.160 | 3.188 | 2.375 | 2.344 | 8.156 | 4.535 | 1.968 |
| | 2½ | RSLB70S | 45675 | 13.630 | 1.750 | 4.500 | 2.870 | 2.733 | 9.825 | 6.240 | 2.610 |
| | 3 | RSLB80S | 45680 | 13.630 | 1.900 | 4.500 | 3.510 | 3.805 | 10.897 | 6.240 | 2.610 |
| | 3½ | RSLB90S | 45610 | 16.000 | 2.125 | 5.536 | 4.000 | 4.535 | 11.465 | 7.500 | 2.975 |
| | 4 | RSLB100S | 45681 | 16.000 | 2.125 | 5.536 | 4.530 | 4.535 | 11.465 | 7.500 | 2.975 |

| Type LL | Sizes (in) | Product Code | UPC Number | A (in) | B (in) | C (in) | D (in) | E (in) | F (in) | G (in) |
|---|---|---|---|---|---|---|---|---|---|---|
| 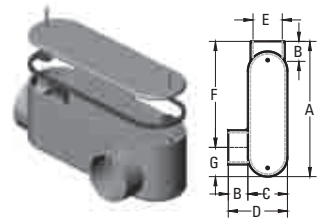 | ½ | RSLL10S | 46650 | 4.337 | 0.639 | 1.268 | 2.487 | 0.840 | 4.095 | 1.297 |
| | ¾ | RSLL20S | 46655 | 5.395 | 0.810 | 1.536 | 2.487 | 1.050 | 4.095 | 1.297 |
| | 1 | RSLL30S | 46660 | 6.250 | 0.910 | 1.700 | 2.075 | 1.335 | 4.750 | 1.500 |
| | 1¼ | RSLL40S | 46665 | 7.625 | 1.050 | 2.300 | 3.575 | 1.100 | 5.750 | 1.750 |
| | 1½ | RSLL50S | 46670 | 8.250 | 1.125 | 2.675 | 3.938 | 1.900 | 6.500 | 1.750 |
| | 2 | RSLL60S | 45682 | 10.531 | 1.160 | 3.188 | 4.535 | 2.375 | 8.156 | 2.344 |
| | 2½ | RSLL70S | 45672 | 13.630 | 1.750 | 4.500 | 6.240 | 2.870 | 9.825 | 3.805 |
| | 3 | RSLL80S | 46674 | 13.630 | 1.900 | 4.500 | 6.240 | 3.510 | 10.897 | 2.733 |
| | 3½ | RSLL90S | 46678 | 16.000 | 2.125 | 5.536 | 7.500 | 4.000 | 11.465 | 4.535 |
| | 4 | RSLL100S | 46676 | 16.000 | 2.125 | 5.536 | 7.500 | 4.530 | 11.465 | 4.535 |

| Type LR | Sizes (in) | Product Code | UPC Number | A (in) | B (in) | C (in) | D (in) | E (in) | F (in) | G (in) |
|---|---|---|---|---|---|---|---|---|---|---|
| 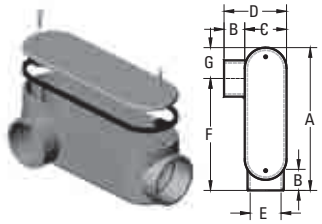 | ½ | RSLR10S | 46700 | 4.337 | 0.639 | 1.268 | 2.487 | 0.840 | 4.095 | 1.297 |
| | ¾ | RSLR20S | 46705 | 5.395 | 0.810 | 1.536 | 2.487 | 1.050 | 4.095 | 1.297 |
| | 1 | RSLR30S | 46710 | 6.250 | 0.910 | 1.700 | 2.075 | 1.335 | 4.750 | 1.500 |
| | 1¼ | RSLR40S | 46715 | 7.625 | 1.050 | 2.300 | 3.575 | 1.100 | 5.750 | 1.750 |
| | 1½ | RSLR50S | 46720 | 8.250 | 1.125 | 2.675 | 3.938 | 1.900 | 6.500 | 1.750 |
| | 2 | RSLR60S | 45683 | 10.531 | 1.160 | 3.188 | 4.535 | 2.375 | 8.156 | 2.344 |
| | 2½ | RSLR70S | 46725 | 13.630 | 1.750 | 4.500 | 6.240 | 2.870 | 9.825 | 3.805 |
| | 3 | RSLR80S | 46728 | 13.630 | 1.900 | 4.500 | 6.240 | 3.510 | 10.897 | 2.733 |
| | 3½ | RSLR90S | 46738 | 16.000 | 2.125 | 5.536 | 7.500 | 4.000 | 11.465 | 4.535 |
| | 4 | RSLR100S | 46735 | 16.000 | 2.125 | 5.536 | 7.500 | 4.530 | 11.465 | 4.535 |

## Fittings - Access Fittings

| Type E | Sizes (in) | Product Code | UPC Number | A (in) | B (in) | C (in) | D (in) |
|---|---|---|---|---|---|---|---|
| 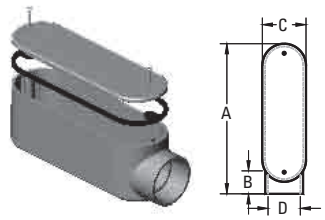 | ½ | RSE10S | 46630 | 4.337 | 0.639 | 1.268 | 0.840 |
| | ¾ | RSE20S | 46632 | 5.395 | 0.810 | 1.536 | 1.050 |
| | 1 | RSE30S | 46634 | 6.250 | 0.910 | 1.700 | 1.335 |
| | 1¼ | RSE40S | 46636 | 7.625 | 1.050 | 2.300 | 1.100 |
| | 1½ | RSE50S | 46638 | 8.250 | 1.125 | 2.675 | 1.900 |
| | 2 | RSE60S | 46640 | 10.351 | 1.160 | 3.188 | 2.375 |
| | 2½ | RSE70S | 46642 | 13.630 | 1.750 | 4.500 | 2.870 |
| | 3 | RSE80S | 46644 | 13.630 | 1.900 | 4.500 | 3.510 |
| | 3½ | RSE90S | 46648 | 16.000 | 2.125 | 5.536 | 4.000 |
| | 4 | RSE100S | 46646 | 16.000 | 2.125 | 5.536 | 4.530 |

| Type T | Sizes (in) | Product Code | UPC Number | A (in) | B (in) | C (in) | D (in) |
|---|---|---|---|---|---|---|---|
| 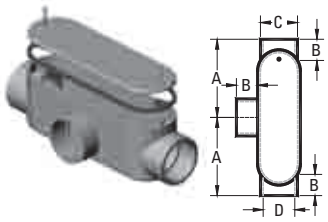 | ½ | RST10S | 45690 | 2.280 | 0.639 | 1.100 | 0.840 |
| | ¾ | RST20S | 45700 | 2.803 | 0.810 | 1.325 | 1.050 |
| | 1 | RST30S | 45710 | 3.250 | 0.910 | 1.600 | 1.335 |
| | 1¼ | RST40S | 45720 | 3.950 | 1.050 | 2.250 | 1.100 |
| | 1½ | RST50S | 45723 | 4.250 | 1.125 | 2.250 | 1.900 |
| | 2 | RST60S | 45725 | 5.438 | 1.160 | 2.820 | 2.375 |
| | 2½ | RST70S | 46745 | 7.300 | 1.750 | 3.950 | 2.870 |
| | 3 | RST80S | 46748 | 7.300 | 1.900 | 3.950 | 3.510 |
| | 3½ | RST90S | 46752 | 8.535 | 2.125 | 5.000 | 4.000 |
| | 4 | RST100S | 46750 | 8.535 | 2.125 | 5.000 | 4.530 |

| Type TB | Sizes (in) | Product Code | UPC Number | A (in) | B (in) | C (in) | D (in) | E (in) | F (in) | G (in) | H (in) |
|---|---|---|---|---|---|---|---|---|---|---|---|
| 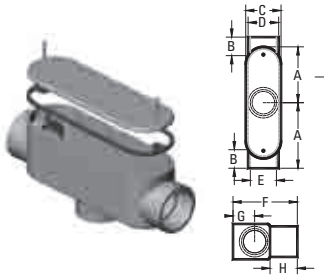 | ½ | RSTB10S | 45692 | 2.280 | 0.639 | 1.268 | 1.100 | 0.840 | 2.487 | 1.005 | 0.750 |
| | ¾ | RSTB20S | 45702 | 2.803 | 0.810 | 1.536 | 1.325 | 1.050 | 2.487 | 1.005 | 0.810 |
| | 1 | RSTB30S | 45712 | 3.250 | 0.910 | 1.700 | 1.600 | 1.335 | 2.075 | 1.125 | 1.115 |
| | 1¼ | RSTB40S | 45721 | 3.950 | 1.050 | 2.300 | 2.250 | 1.100 | 3.575 | 1.562 | 1.300 |
| | 1½ | RSTB50S | 45724 | 4.250 | 1.125 | 2.675 | 2.250 | 1.900 | 3.938 | 1.656 | 1.425 |
| | 2 | RSTB60S | 45727 | 5.438 | 1.160 | 3.188 | 2.820 | 2.375 | 4.535 | 1.968 | 1.160 |
| | 2½ | RSTB70S | 46760 | 7.300 | 1.750 | 4.500 | 3.950 | 2.870 | 6.240 | 2.610 | - |
| | 3 | RSTB80S | 46762 | 7.300 | 1.900 | 4.500 | 3.950 | 3.510 | 6.240 | 2.610 | - |
| | 3½ | RSTB90S | 46766 | 8.535 | 2.125 | 5.536 | 5.000 | 4.000 | 7.500 | 2.975 | - |
| | 4 | RSTB100S | 46764 | 8.535 | 2.125 | 5.536 | 5.000 | 4.530 | 7.500 | 2.975 | - |

Fittings - Cover Plates

## Single Gang Cover Plates - F Series




| Description | Product Code | UPC Number |
|---|---|---|
| Toggle Switch | RTSC15-10 | 45845 |
| Duplex Receptacle | RDRC15-10R20 | 44685 |
| Single Receptacle - 15 Amp | RC15-10R20-3 | 47035 |
| Single Receptacle - 20 Amp | RC15-10R30-3 | 47036 |
| Single Receptacle - 30 Amp | RC15-10 | 47037 |
| Single Blank with Gasket | RBRC15-10 | 44680 |
| Gasket | GASK15-10 | 44682 |

## Double Gang Cover Plates - F Series




| Description | Product Code | UPC Number |
|---|---|---|
| Double Switch | RTSC20-2 | 45846 |
| Combo Switch/Receptacle | RTSDC20-2 | 45847 |
| Double Duplex | RDRC20-2 | 44686 |
| Double Blank with Gasket | RBRC20-2 | 44681 |
| Gasket | GASK20-2 | 45949 |

## Triple Gang Cover Plates - F Series




| Description | Product Code | UPC Number |
|---|---|---|
| Triple Switch | RTSC20-3 | 45857 |
| Double Switch Receptacle | RDSDR20-3 | 44689 |
| Double Receptacle/Switch | RTSDC20-3 | 45858 |
| Triple Receptacle | RDRC20-3 | 44688 |
| Triple Blank with Gasket | RBRC20-3 | 44683 |
| Gasket | GASK20-3 | 45859 |

## Fittings - Weatherproof Cover Plates

### Single Gang Weatherproof Cover Plates



RVSC15-10 RVSC15-10 RWTG15-10 RWGF15-10 RWTL RVSC15-10 GASK W

| Description | Product Code | UPC Number |
|---|---|---|
| Toggle Switch Cover | RVSC15-10 | 45940 |
| Plunger Switch Cover | RVPT15-10 | 45930 |
| Toggle | RWTG15-10 | 45339 |
| Duplex Receptacle | RWDR15-10 | 45093 |
| Duplex Receptacle - White | RWDR15-10W | 45094 |
| Ground Fault Receptacle | RWGF15-10 | 45095 |
| Ground Fault Receptacle - White | RWGF15-10W | 45098 |
| Single Receptacle - 15 Amp | RWTL15 | 45470 |
| Single Receptacle - 20 Amp | RWTL20 | 45472 |
| Single Receptacle - 30 Amp | RWTL30 | 45480 |
| Single Receptacle - 50 Amp | RWTL50 | 45482 |
| Gasket | GASK W | 45484 |

### Double Gang Weatherproof Cover Plates



RVSC20-2 RVSRC20-2 RVSDR20-2 RVSRR20-2 GASK20-2

| Description | Product Code | UPC Number |
|---|---|---|
| Double Toggle | RVSC20-2 | 45941 |
| Plunger/GFI | RVSRC20-2 | 45947 |
| Plunger/Duplex Receptacle | RVSDR20-2 | 45945 |
| Plunger/Single Receptacle | RVSRR20-2 | 45948 |
| Gasket | GASK20-2 | 45949 |

Fittings - Slab Boxes

## Single Gang Boxes - F Series



RFS



RFSS



RFSC



RFSCC

| Description | Product Code | UPC Number | Volume (in3) |
|---|---|---|---|
| ½" FS | RFS10 | 45200 | 17.0 |
| ¾" FS | RFS15 | 45210 | 17.0 |
| ½" FSS | RFSS10 | 45240 | 17.5 |
| ¾" FSS | RFSS15 | 45250 | 17.5 |
| ½" FSC | RFSC10 | 45220 | 16.3 |
| ¾" FSC | RFSC15 | 45230 | 16.3 |
| ½" FSCC | RFSCC10 | 45233 | 17.0 |
| ¾" FSCC | RFSCC15 | 45235 | 17.0 |

## Single Gang Deep Boxes - FD Series



RFDS



RFDC



BLANK



347 VOLT

**Outside Dimensions: Length = 4.5", Width = 6.6", Height = 2.5", except BLANK, L = 4.5", W = 6.6", H = 3.0"**

| Description | Product Code | UPC Number | Volume (in3) |
|---|---|---|---|
| ½" FSC | RFSC3-10 | 45224 | 56.0 |
| ¾" FSC | RFSC3-15 | 45232 | 56.0 |
| 1" FSC | RFSC3-20 | 45228 | 56.0 |
| ½" FS | RFS3-10 | 45208 | 54.0 |
| ¾" FS | RFS3-15 | 45218 | 54.0 |
| 1" FS | RFS3-20 | 45219 | 54.0 |
| BLANK | RFD-3 | 45155 | 73.8 |

## Double Gang Boxes - F Series


FS


FSS


FSC


FSCC


BLANK

**Outside Dimensions: Length = 4.5", Width = 4.75", Height = 2.5", except BLANK, L=4.75", W=4.75", H=3.0"**

| Description | Product Code | UPC Number | Volume (in3) |
|---|---|---|---|
| ½" FS | RFS2-10 | 45205 | 39.5 |
| ¾" FS | RFS2-15 | 45215 | 39.5 |
| 1" FS | RFS2-20 | 45216 | 39.5 |
| ½" FSS | RFSS2-10 | 45242 | 37.0 |
| ¾" FSS | RFSS2-15 | 45244 | 37.0 |
| 1" FSS | RFSS2-20 | 45246 | 37.0 |
| ½" FSC | RFSC2-10 | 45222 | 37.0 |
| ¾" FSC | RFSC2-15 | 45231 | 37.0 |
| 1" FSC | RFSC2-20 | 45226 | 37.0 |
| ½" FSCC | RFSCC2-10 | 45234 | 36.0 |
| ¾" FSCC | RFSCC2-15 | 45238 | 36.0 |
| 1" FSCC | RFSCC2-20 | 45239 | 36.0 |
| BLANK | RFD-D | 45150 | 52.0 |

## Triple Gang Boxes - F Series


FSC


FS


BLANK

**Outside Dimensions: Length = 4.5", Width = 6.6", Height = 2.5", except BLANK, L = 4.5", W = 6.6", H = 3.0"**

| Description | Product Code | UPC Number | Volume (in3) |
|---|---|---|---|
| ½" FSC | RFSC3-10 | 45224 | 56.0 |
| ¾" FSC | RFSC3-15 | 45232 | 56.0 |
| 1" FSC | RFSC3-20 | 45228 | 56.0 |
| ½" FS | RFS3-10 | 45208 | 54.0 |
| ¾" FS | RFS3-15 | 45218 | 54.0 |
| 1" FS | RFS3-20 | 45219 | 54.0 |
| BLANK | RFD-3 | 45155 | 73.8 |

## Octagonal Boxes



| Size (in) | Product No. | UPC No. |
|---|---|---|
| 4 x 1½ | ROB15/10 | 45520 |
| 4 x 2 | ROB20 | 45525 |
| ¾ | RKO15 | 45450 |
| 1 | RKO20 | 45455 |

## Octagonal Box Extension Rings



| Size (in) | Product No. | UPC No. |
|---|---|---|
| 1 | RXR20 | 46490 |
| 2 | RXR35 | 46495 |

## Junction Boxes With Gasket



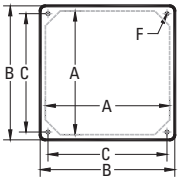





| Nominal Size (in) | Product Number | UPC Number | Inside Length & Width (A) (in) | Outside Length & Width (B) (in) | Length Screw to Screw (C) (in) | Outside Height (E) (in) | Inside Height (D) (in) | Screw Size (F) | Volume (in3) |
|---|---|---|---|---|---|---|---|---|---|
| 4 x 4 x 2 | RJB442 | 45300 | 3.675 | 4.000 | 3.450 | 2.125 | 2.000 | 8-32 | 25.4 |
| 4 x 4 x 4 | RJB444 | 45310 | 3.675 | 4.000 | 3.450 | 4.188 | 3.750 | 8-32 | 47.5 |
| 4 x 4 x 6 | RJB446 | 45315 | 3.675 | 4.000 | 3.450 | 6.225 | 6.000 | 8-32 | 76.1 |
| 5 x 5 x 2 | RJB552 | 45320 | 4.680 | 5.000 | 4.485 | 2.000 | 1.845 | 8-32 | 38.7 |
| 6 x 6 x 4 | RJB664 | 45330 | 6.000 | 6.375 | 5.813 | 4.188 | 4.000 | 10-32 | 139.5 |
| 6 x 6 x 6 | RJB666 | 45335 | 6.000 | 6.375 | 5.813 | 6.188 | 6.000 | 10-32 | 209.3 |
| 8 x 8 x 4 | RJB884 | 45340 | 8.075 | 8.625 | 7.996 | 4.230 | 4.005 | ¼-20 | 258.6 |
| 8 x 8 x 7 | RJB887 | 45350 | 8.100 | 8.625 | 7.996 | 7.250 | 7.035 | ¼-20 | 455.6 |
| 12 x 12 x 4 | RJB12124 | 45280 | 12.085 | 12.580 | 11.874 | 4.256 | 4.030 | ¼-20 | 578.3 |
| 12 x 12 x 6 | RJB12126 | 45290 | 12.085 | 12.580 | 11.874 | 6.240 | 6.025 | ¼-20 | 864.6 |
| 12 x 12 x 8 | RJB12128 | 45295 | 12.085 | 12.580 | 11.874 | 8.250 | 8.025 | ¼-20 | 1151.6 |

## Highway Boxes





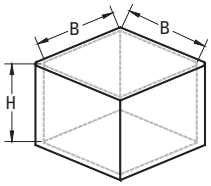


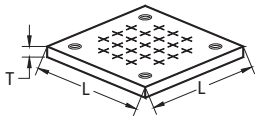


| Nominal Size (in) | Product Number | UPC Number | Box Inside Length & Width (B) (in) | Box Inside Depth (H) (in) | Lid Length & Width (L) (in) | Thickness of Lid (T) (in) | Volume (in3) |
|---|---|---|---|---|---|---|---|
| 6 x 6 x 4 | H664 | 47040 | 6.0 | 4.25 | 9.0 | 0.60 | 139.5 |
| 6 x 6 x 6 | H666 | 47041 | 6.0 | 6.25 | 9.0 | 0.60 | 209.3 |
| 8 x 8 x 4 | H884 | 47042 | 8.0 | 4.25 | 11.5 | 0.75 | 258.6 |
| 8 x 8 x 6 | H886 | 47043 | 8.0 | 6.25 | 11.5 | 0.75 | 400.0 |
| 8 x 8 x 7 | H887 | 47044 | 8.0 | 7.25 | 11.5 | 0.75 | 455.6 |
| 8 x 8 x 7 | H887-A | 47045 | 8.0 | 7.25 | 11.5 | 0.75 | 418.4 |

## Junction Box Adapters



| Size (in) | Product No. | UPC No. |
|---|---|---|
| ½ | RJBA10 | 45360 |
| ¾ | RJBA15 | 45370 |
| 1 | RJBA20 | 45380 |
| 1¼ | RJBA25 | 45390 |
| 1½ | RJBA30 | 45400 |
| 2 | RJBA35 | 45410 |
| 2½ | RJBA40 | 45420 |
| 3 | RJBA45 | 45430 |
| 3½ | RJBA50 | 45435 |
| 4 | RJBA55 | 45440 |

## Duplex Floor Boxes & Cover (*Includes Leveling Ring)



| Size (in) | Product No. | UPC No. |
|---|---|---|
| 4 x ¾ | RFDB4 | 46980 |
| 2 x ¾, 2 x 1 | RFDB2 | 46982 |
| Polycarbonate Bronze Cover | RFDBC | 46984 |

**Notes:**

**Our various pipe and fittings solutions have been manufactured to meet the needs of our customers and their applications. Contact one of the below Sales Centres for more information:**

- Municipal Pipe & Fittings Solutions
- Plumbing Pipe & Fittings Solutions
- Electrical Pipe & Fittings Solutions
- Industrial Pipe & Fittings Solutions
- Irrigation Pipe & Fittings Solutions

**Sales & Distribution Centres:**

Langley, BC, Canada
T/F 1.800.663.0696
F 1.800.663.6564

Woodbridge, ON, Canada
T/F 1.866.769.7473
F 905.856.3986

Laval, QC, Canada
T/F 1.800.465.9754
F 450.688.6624

**Distribution Centres:**

Calgary, AB, Canada
T/F 1.800.663.0696
F 1.800.663.6564

Winnipeg, MB, Canada
T/F 1.800.663.0696
F 1.800.663.6564

**royalelectricalca.com**





MIX
Paper from responsible sources
FSC® C003472

E_RCPF_BRV4
Printed 02.2014

ROYAL® Building Products

Pipe & Fittings Solutions | Municipal Plumbing Electrical Industrial Irrigation

# Electrical Non-Metallic PVC Products

PVC Fittings
ENT Pipe and Fittings
Enclosures

Category E Product BRV1
October, 2012

**E Series**







ROYAL Electrical Solutions

# Contents

## Rigid PVC Conduit Fittings

Pages 4 - 25

Shown in Alphabetical Order


Access Fittings ..... 6-8
- Type C ..... 6
- Type E ..... 7
- Type LB ..... 6
- Type LL ..... 7
- Type LR ..... 7
- Type T ..... 8
- Type TB ..... 8

Bell End (Hub X Spigot) - Molded ..... 9
Coupling ..... 4
5° Coupling ..... 4
Double Gang Box - F Series ..... 12
Double Gang Weatherproof Cover Plate ..... 11
Duct - Base Vertical Lock Spacer ..... 15
Duct - Intermediate Vertical Lock Spacer ..... 14
Duplex Floor Box Cover ..... 13
Duplex Floor Box ..... 13
ECOVOC Low VOC / Clear Cement ..... 15

Elbows ..... 16-25
Schedule 40
- Radius Elbow Belled - 45° 24" Radius ..... 22
- Special Radius Elbow Belled - 45° 36" Radius ..... 22
- Special Radius Elbow Belled - 45° 48" Radius ..... 22
- Special Radius Elbow Belled - 90° 24" Radius ..... 21
- Special Radius Elbow Belled - 90° 36" Radius ..... 21
- Special Radius Elbow Belled - 90° 48" Radius ..... 22
- Special Radius Elbow Plain End - 45° 24" Radius ..... 20
- Special Radius Elbow Plain End - 45° 36" Radius ..... 21
- Special Radius Elbow Plain End - 45° 48" Radius ..... 21
- Special Radius Elbow Plain End - 90° 24" Radius ..... 19
- Special Radius Elbow Plain End - 90° 36" Radius ..... 20
- Special Radius Elbow Plain End - 90° 48" Radius ..... 20
- Standard Elbows - 11 1/4° Elbow - Plain End ..... 17
- Standard Elbows - 22 1/2° Elbow - Plain End ..... 17
- Standard Elbows - 30° Elbow - Bell End ..... 18
- Standard Elbows - 30° Elbow - Plain End ..... 17
- Standard Elbows - 45° Elbow - Bell End ..... 18
- Standard Elbows - 45° Elbow - Plain End ..... 16
- Standard Elbows - 90° Elbow - Bell End ..... 18
- Standard Elbows - 90° Elbow - Plain End ..... 16

Schedule 80
- Special Radius Elbow Belled - 45° 24" Radius ..... 25
- Special Radius Elbow Belled - 45° 36" Radius ..... 25
- Special Radius Elbow Belled - 45° 48" Radius ..... 25
- Special Radius Elbow Belled - 90° 24" Radius ..... 24
- Special Radius Elbow Belled - 90° 36" Radius ..... 24
- Special Radius Elbow Belled - 90° 48" Radius ..... 24
- Special Radius Elbow Plain End ..... 23
- Special Radius Elbow Plain End - 45° 48" Radius ..... 24
- Special Radius Elbow Plain End - 90° 24" Radius ..... 22
- Special Radius Elbow Plain End - 90° 36" Radius ..... 23
- Special Radius Elbow Plain End - 90° 48" Radius ..... 23
- Standard Elbows - 45° Elbow - Plain End ..... 19
- Standard Elbows - 90° Elbow - Plain End ..... 19

Expansions Joint ..... 5
Junction Box Adapters ..... 13
Junction Box with Gasket ..... 13
KO Plug ..... 12
Meter Offset ..... 5
Meter Riser Kit ..... 14
Octagonal Box ..... 12
Octagonal Box Extension Ring ..... 12
Pipe Strap PVC - 2 Hole ..... 5
Pull Elbow ..... 9
Reducer Bushing ..... 10
Service Entrance Fitting ..... 6
Single Gang Box - F Series ..... 11
Single Gang Cover Plate - F Series ..... 10
Single Gang Deep Box - FD Series ..... 11
Single Gang Weatherproof Cover Plate ..... 11
Slip Meter Riser ..... 14
Solvent Weld End Cap ..... 9
Strain Relief Connector ..... 8
Threaded Strain Relief Connector ..... 8
Terminal Adapter ..... 4
- Female ..... 5
- Male ..... 4

Threaded Reducer Bushing ..... 9
Universal Plug w/Pulling Eye ..... 15
Vinyl Siding Electrical Mount ..... 16

# Contents

## Rigid PVC Conduit Fittings with Brass Fasteners

Pages 26 - 29

Shown in Alphabetical Order


Access Fitting
- Type C ..... 26
- Type E ..... 27
- Type LL ..... 26
- Type LR ..... 27
- Type T ..... 27
- Type TB ..... 27
- Type LB ..... 26

Double Gang Box - F Serie ..... 28
Double Gang Weatherproof Cover Plate ..... 29
Junction Box with Gasket ..... 28
Single Gang Box - F Series ..... 28
Single Gang Cover Plate - F Series ..... 29
Single Gang Deep Box - FD Series ..... 28
Single Gang Weatherproof Cover Plate ..... 29


## ENT - Tubing

Pages 30 - 31

Shown in Alphabetical Order


Coils
- Blue ENT Tubing ..... 30
- Grey ENT Tubing ..... 30

Reels
- Blue ENT Tubing ..... 30
- Grey ENT Tubing ..... 31

Straight Length
- Blue ENT Tubing ..... 31
- Grey ENT Tubing ..... 31


## ENT - Fittings

Pages 32 - 35

Shown in Alphabetical Order


45 Degree Angled Form Stubby (Polyethylene) ..... 33
Adapter with set screw ..... 32
Clip Ring ..... 32
Coupling ..... 32
Deep Single Gang Concrete Wall Box ..... 35
Isolator Module Slab Box ..... 34
Quick-Snap Terminal Adapter ..... 32
Shallow Single Gang Concrete Wall Box ..... 35
Shallow Slab Box ..... 34
Slab Box Extension Ring ..... 33
Slab Box with Hub Extensions and Grey Lid ..... 34
Slab Box with Knockouts and Grey Lid ..... 34
Threaded Terminal Adapter with Lock Nut ..... 32
Heavy Duty Lock Nut ..... 33
Straight Stubby (Polyethylene) ..... 33
Tapered Plug (Polyethylene) ..... 33


## PVC Enclosures

Pages 36 - 38

Shown in Alphabetical Order


Electrical Enclosures ..... 38
Electrical Trough Box
- Latch Cover ..... 36
- Screw Cover ..... 36

Large Fabricated Junction Boxes ..... 37

# Rigid PVC Conduit Fittings

| Item | Size in Inches | Part Number | Reference Royal | Reference CANTEX | Reference Thomas & Betts - Carlon | Carton Qty |
|---|---|---|---|---|---|---|
| **COUPLING** | | | | | | |
|  | 1/2″ | E010050 | REC10 | 6141623 | E940D | 200 |
| | 3/4″ | E010075 | REC15 | 6141624 | E940E | 125 |
| | 1″ | E010100 | REC20 | 6141625 | E940F | 70 |
| | 1 1/4″ | E010125 | REC25 | 6141626 | E940G | 40 |
| | 1 1/2″ | E010150 | REC30 | 6141627 | E940H | 30 |
| | 2″ | E010200 | REC35 | 6141628 | E940J | 40 |
| | 2 1/2″ | E010250 | REC40 | 6141629 | E940K | 20 |
| | 3″ | E010300 | REC45 | 6141630 | E940L | 40 |
| | 3 1/2″ | E010350 | REC50 | 6141631 | E940M | 30 |
| | 4″ | E010400 | REC55 | 6141632 | E940N | 20 |
| | 5″ | E010500 | REC60 | 6141633 | E940P | 10 |
| | 6″ | E010600 | REC65 | 6141634 | E940R | 8 |
| | 8″ | E010800 | ----- | 6141635D | ----- | 3 |
| **5° COUPLING** | | | | | | |
|  | 2″ | E013200 | R5EC35 | 6151457 | E245J | 20 |
| | 2 1/2″ | E013250 | R5EC40 | ----- | ----- | 12 |
| | 3″ | E013300 | R5EC45 | 6151458 | ----- | 25 |
| | 3 1/2″ | E013350 | R5EC50 | ----- | ----- | 15 |
| | 4″ | E013400 | R5EC55 | 6151459 | E245N | 15 |
| | 5″ | E013500 | R5EC60 | 6151460 | E245P | 8 |
| | 6″ | E013600 | R5EC65 | 6151461 | E245R | 4 |
| **TERMINAL ADAPTER** | | | | | | |
|  | 1/2″ | E011050 | RTA10 | 5140103 | E943D | 200 |
| | 3/4″ | E011075 | RTA15 | 5140104 | E943E | 125 |
| | 1″ | E011100 | RTA20 | 5140105 | E943F | 70 |
| | 1 1/4″ | E011125 | RTA25 | 5140106 | E943G | 40 |
| | 1 1/2″ | E011150 | RTA30 | 5140107 | E943H | 30 |
| | 2″ | E011200 | RTA35 | 5140108 | E943J | 40 |
| | 2 1/2″ | E011250 | RTA40 | 5140109 | E943K | 20 |
| | 3″ | E011300 | RTA45 | 5140110 | E943L | 40 |
| | 3 1/2″ | E011350 | RTA50 | 5140111 | E943M | 30 |
| | 4″ | E011400 | RTA55 | 5140112 | E943N | 20 |
| | 5″ | E011500 | RTA60 | 5140113 | E943P | 10 |
| | 6″ | E011600 | RTA65 | 5140114 | E943R | 8 |

# Rigid PVC Conduit Fittings

| Item | Size in Inches | Part Number | Reference Royal | Reference CANTEX | Reference Thomas & Betts - Carlon | Carton Qty |
|---|---|---|---|---|---|---|
| **FEMALE ADAPTER (NPT TAPERED THREAD)** | | | | | | |
|  | 1/2″ | E012050 | RFA10 | 5140043 | E942D | 200 |
| | 3/4″ | E012075 | RFA15 | 5140044 | E942E | 125 |
| | 1″ | E012100 | RFA20 | 5140045 | E942F | 70 |
| | 1 1/4″ | E012125 | RFA25 | 5140046 | E942G | 40 |
| | 1 1/2″ | E012150 | RFA30 | 5140047 | E942H | 30 |
| | 2″ | E012200 | RFA35 | 5140048 | E942J | 40 |
| | 2 1/2″ | E012250 | RFA40 | 5140049 | E942K | 20 |
| | 3″ | E012300 | RFA45 | 5140050 | E942L | 40 |
| | 3 1/2″ | E012350 | RFA50 | 5140051 | E942M | 30 |
| | 4″ | E012400 | RFA55 | 5140052 | E942N | 20 |
| | 5″ | E012500 | RFA60 | 5140053 | E942P | 10 |
| | 6″ | E012600 | RFA65 | 5140054 | E942R | 8 |
| **EXPANSIONS JOINT** | | | | | | |
|  | 1/2″ | E016050 | REJ10 | 5144031 | E945D | 25 |
| | 3/4″ | E016075 | REJ15 | 5144032 | E945E | 10 |
| | 1″ | E016100 | REJ20 | 5144033 | E945F | 10 |
| | 1 1/4″ | E016125 | REJ25 | 5144034 | E945G | 5 |
| | 1 1/2″ | E016150 | REJ30 | 5144035 | E945H | 5 |
| | 2″ | E016200 | REJ35 | 5144036 | E945J | 25 |
| | 2 1/2″ | E016250 | REJ40 | 5144037 | E945K | 12 |
| | 3″ | E016300 | REJ45 | 5144038 | E945L | 12 |
| | 3 1/2″ | E016350 | REJ50 | 5144039 | E945M | 6 |
| | 4″ | E016400 | REJ55 | 5144040 | E945N | 6 |
| | 5″ | E016500 | REJ60 | 5144041 | E945P | 1 |
| | 6″ | E016600 | REJ65 | 5144042 | E945R | 1 |
| **PIPE STRAP PVC - 2 HOLE** | | | | | | |
|  | 1/2″ | E039050 | RPS10 | 5133736 | E977DC | 300 |
| | 3/4″ | E039075 | RPS15 | 5133737 | E977EC | 200 |
| | 1″ | E039100 | RPS20 | 5133738 | E977FC | 200 |
| | 1 1/4″ | E039125 | RPS25 | 5133733 | E977GC | 200 |
| | 1 1/2″ | E039150 | RPS30 | 5133734 | E977HC | 200 |
| | 2″ | E039200 | RPS35 | 5133735 | E977JC | 200 |
| **METER OFFSET** | | | | | | |
|  | 1 1/4″ | E024125 | RMO25 | 5133183 | E995G | 15 |
| | 2″ | E024200 | RMO35 | 5133185 | E995J | 8 |

# Rigid PVC Conduit Fittings

| Item | Size in Inches | Part Number | Reference Royal | Reference CANTEX | Reference Thomas & Betts - Carlon | Carton Qty |
|---|---|---|---|---|---|---|
| **SERVICE ENTRANCE FITTING** | | | | | | |
|  | 1/2″ | E025050 | REF10 | 5133590 | ----- | 10 |
| | 3/4″ | E025075 | REF15 | 5133591 | E998E CAR | 10 |
| | 1″ | E025100 | REF20 | 5133741 | E998F CAR | 20 |
| | 1 1/4″ | E025125 | REF25 | 5133742 | E998G CAR | 20 |
| | 1 1/2″ | E025150 | REF30 | 5133695 | E998H CAR | 20 |
| | 2″ | E025200 | REF35 | 5133743 | E998J | 5 |
| | 2 1/2″ | E025250 | REF40 | 5133696 | E998K UPC | 5 |
| | 3″ | E025300 | REF45 | 5133697 | E998L | 5 |
| | 3 1/2″ | E025350 | REF50 | 5133698 | ----- | 5 |
| | 4″ | E025400 | REF55 | 5133699 | E998N | 1 |
| **ACCESS FITTING - TYPE LB** | | | | | | |
|  | 1/2″ | E033050 | RSLB10S | 5133663 | E986D CAR | 25 |
| | 3/4″ | E033075 | RSLB20S | 5133664 | E986E CAR | 15 |
| | 1″ | E033100 | RSLB30S | 5133665 | E986F CAR | 10 |
| | 1 1/4″ | E033125 | RSLB40S | 5133666 | E986G CAR | 10 |
| | 1 1/2″ | E033150 | RSLB50S | 5133667 | E986H CAR | 10 |
| | 2″ | E033200 | RSLB60S | 5133668 | E986J | 5 |
| | 2 1/2″ | E033250 | RSLB70S | 5133669 | E986K | 5 |
| | 3″ | E033300 | RSLB80S | 5133670 | E986L | 5 |
| | 3 1/2″ | E033350 | RSLB90S | 5133671 | E986M | 4 |
| | 4″ | E033400 | RSLB100S | 5133672 | E986N | 4 |
| **ACCESS FITTING - TYPE C** | | | | | | |
|  | 1/2″ | E032050 | RSC10S | 5133101 | E987D CAR | 25 |
| | 3/4″ | E032075 | RSC20S | 5133102 | E987E CAR | 15 |
| | 1″ | E032100 | RSC30S | 5133103 | E987F CAR | 10 |
| | 1 1/4″ | E032125 | RSC40S | 5133104 | E987G CAR | 10 |
| | 1 1/2″ | E032150 | RSC50S | 5133105 | E987H CAR | 10 |
| | 2″ | E032200 | RSC60S | 5133106 | E987J | 5 |
| | 2 1/2″ | E032250 | RSC70S | 5133108 | ----- | 5 |
| | 3″ | E032300 | RSC80S | 5133107 | ----- | 5 |
| | 3 1/2″ | E032350 | RSC90S | 5133110 | ----- | 4 |
| | 4″ | E032400 | RSC100S | 5133109 | ----- | 4 |

# Rigid PVC Conduit Fittings

| Item | Size in Inches | Part Number | Reference Royal | Reference CANTEX | Reference Thomas & Betts - Carlon | Carton Qty |
|---|---|---|---|---|---|---|
| **ACCESS FITTING - TYPE LL** | | | | | | |
| 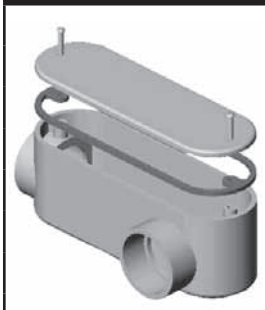 | 1/2″ | E034050 | RSLL10S | 5133660 | E984D CAR | 25 |
| | 3/4″ | E034075 | RSLL20S | 5133661 | E984E CAR | 15 |
| | 1″ | E034100 | RSLL30S | 5133662 | E984F CAR | 10 |
| | 1 1/4″ | E034125 | RSLL40S | 5133649 | E984G CAR | 10 |
| | 1 1/2″ | E034150 | RSLL50S | 5133648 | E984H CAR | 10 |
| | 2″ | E034200 | RSLL60S | 5133647 | E984J | 5 |
| | 2 1/2″ | E034250 | RSLL70S | 5133644 | ------ | 5 |
| | 3″ | E034300 | RSLL80S | 5133646 | ------ | 5 |
| | 3 1/2″ | E034350 | RSLL90S | 5133640 | ------ | 4 |
| | 4″ | E034400 | RSLL100S | 5133645 | ------ | 4 |
| **ACCESS FITTING - TYPE LR** | | | | | | |
| 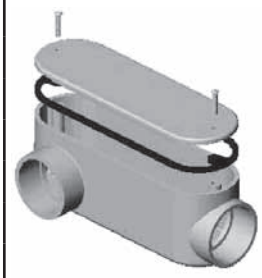 | 1/2″ | E035050 | RSLR10S | 5133650 | E985D CAR | 25 |
| | 3/4″ | E035075 | RSLR20S | 5133651 | E985E CAR | 15 |
| | 1″ | E035100 | RSLR30S | 5133652 | E985F CAR | 10 |
| | 1 1/4″ | E035125 | RSLR40S | 5133653 | E985G CAR | 10 |
| | 1 1/2″ | E035150 | RSLR50S | 5133654 | E985H CAR | 10 |
| | 2″ | E035200 | RSLR60S | 5133655 | E985J | 5 |
| | 2 1/2″ | E035250 | RSLR70S | 5133658 | ------ | 5 |
| | 3″ | E035300 | RSLR80S | 5133656 | ------ | 5 |
| | 3 1/2″ | E035350 | RSLR90S | 5133659 | ------ | 4 |
| | 4″ | E035400 | RSLR100S | 5133657 | ------ | 4 |
| **ACCESS FITTING - TYPE E** | | | | | | |
| 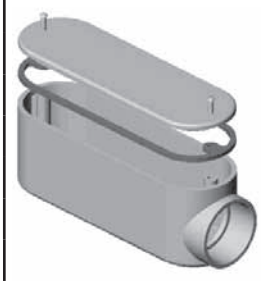 | 1/2″ | E036050 | RSE10S | 5133151 | E998D CAR | 25 |
| | 3/4″ | E036075 | RSE20S | 5133152 | E998E | 15 |
| | 1″ | E036100 | RSE30S | 5133153 | E988F CAR | 10 |
| | 1 1/4″ | E036125 | RSE40S | 5133154 | E988G CAR | 10 |
| | 1 1/2″ | E036150 | RSE50S | 5133155 | E988H CAR | 10 |
| | 2″ | E036200 | RSE60S | 5133156 | E988J | 5 |
| | 2 1/2″ | E036250 | RSE70S | 5133157 | ------ | 5 |
| | 3″ | E036300 | RSE80S | 5133158 | ------ | 5 |
| | 3 1/2″ | E036350 | RSE90S | 5133160 | ------ | 4 |
| | 4″ | E036400 | RSE100S | 5133159 | ------ | 4 |

# Rigid PVC Conduit Fittings

| Item | Size in Inches | Part Number | Reference Royal | Reference CANTEX | Reference Thomas & Betts - Carlon | Carton Qty |
|---|---|---|---|---|---|---|
| **ACCESS FITTING - TYPE T** | | | | | | |
| 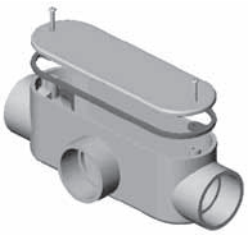 | 1/2″ | E037050 | RST10S | 5133563 | E983D CAR | 25 |
| | 3/4″ | E037075 | RST20S | 5133564 | E983E CAR | 15 |
| | 1″ | E037100 | RST30S | 5133565 | E983F | 10 |
| | 1 1/4″ | E037125 | RST40S | 5133566 | E983G | 10 |
| | 1 1/2″ | E037150 | RST50S | 5133567 | E983H CAR | 10 |
| | 2″ | E037200 | RST60S | 5133568 | E983J | 5 |
| | 2 1/2″ | E037250 | RST70S | 5133569 | ----- | 2 |
| | 3″ | E037300 | RST80S | 5133570 | ----- | 2 |
| | 3 1/2″ | E037350 | RST90S | 5133572 | ----- | 1 |
| | 4″ | E037400 | RST100S | 5133571 | ----- | 1 |
| **ACCESS FITTING - TYPE TB** | | | | | | |
|  | 1/2″ | E069050 | RSTB10S | ----- | ----- | 30 |
| | 3/4″ | E069075 | RSTB20S | ----- | ----- | 20 |
| | 1″ | E069100 | RSTB30S | ----- | ----- | 10 |
| | 1 1/4″ | E069125 | RSTB40S | ----- | ----- | 10 |
| **STRAIN RELIEF CONNECTOR** | | | | | | |
|  | 3/4″ | E030075 | RSRC15 | ----- | ----- | 25 |
| **THREADED STRAIN RELIEF CONNECTOR** | | | | | | |
|  | 1/2″ | E031050 | RTSRC10 | 5133430 | ----- | 25 |
| | 3/4″ | E031075 | RTSRC15 | 5133431 | ----- | 25 |

# Rigid PVC Conduit Fittings

| Item | Size in Inches | Part Number | Reference Royal | Reference CANTEX | Reference Thomas & Betts - Carlon | Carton Qty |
|---|---|---|---|---|---|---|
| **PULL ELBOW** | | | | | | |
| 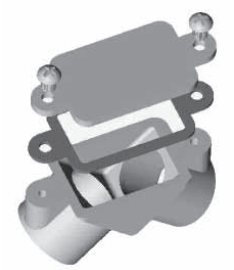 | 1/2″ | E027050 | RPE10 | 5240100 | E990DR CAR | 75 |
| | 3/4″ | E027075 | RPE15 | 5240101 | E990ER CAR | 50 |
| **SOLVENT WELD END CAP** | | | | | | |
|  | 1/2″ | E026050 | RCAP10 | 5140031 | E958D | 100 |
| | 3/4″ | E026075 | RCAP15 | 5140032 | E958E | 100 |
| | 1″ | E026100 | RCAP20 | 5140033 | E958F | 50 |
| | 1 1/4″ | E026125 | RCAP25 | 5140034 | E958G | 25 |
| | 1 1/2″ | E026150 | RCAP30 | 5140035 | E958H | 25 |
| | 2″ | E026200 | RCAP35 | 5140037 | E958J | 50 |
| | 2 1/2″ | E026250 | RCAP40 | 5140038 | E958K | 25 |
| | 3″ | E026300 | RCAP45 | 5140039 | E958L | 25 |
| | 4″ | E026400 | RCAP55 | 5140040 | E958N | 25 |
| | 5″ | E026500 | RCAP60 | 5140041 | E958P | 25 |
| | 6″ | E026600 | RCAP65 | 5140042 | E958R | 10 |
| | 8″ | E026800 | ----- | ----- | ----- | 6 |
| **THREADED REDUCER BUSHING** | | | | | | |
|  | 3/4″ X 1/2″ | E0150705 | R1825 | ----- | E9842D | 200 |
| | 1″ X 1/2″ | E0151005 | R1826 | ----- | ----- | 200 |
| | 1″ X 3/4″ | E0151007 | R1827 | ----- | E9842E | 200 |
| **BELL END (HUB X SPIGOT) - MOLDED** | | | | | | |
|  | 1/2″ | E070050 | REB10 | 5144003 | ----- | 100 |
| | 3/4″ | E070075 | REB15 | 5144004 | ----- | 100 |
| | 1″ | E070100 | REB20 | 5144005 | E997F | 50 |
| | 1 1/4″ | E070125 | REB25 | 5144006 | E997G | 50 |
| | 1 1/2″ | E070150 | REB30 | 5144007 | E997H | 50 |
| | 2″ | E070200 | REB35 | 5144008 | E997J | 40 |
| | 2 1/2″ | E070250 | REB40 | 5144009 | E997K | 30 |
| | 3″ | E070300 | REB45 | 5144010 | E997L | 50 |
| | 3 1/2″ | E070350 | REB50 | 5144011 | E997M | 50 |
| | 4″ | E070400 | REB55 | 5144012 | E997N | 50 |
| | 5″ | E070500 | REB60 | 5144013 | E997P | 25 |
| | 6″ | E070600 | REB65 | 5144014 | E997R | 15 |

# Rigid PVC Conduit Fittings

| Item | Size in Inches | Part Number | Reference Royal | Reference CANTEX | Reference Thomas & Betts - Carlon | Carton Qty |
|---|---|---|---|---|---|---|
| **REDUCER BUSHING** | | | | | | |
|  | 3/4" X 1/2" | E0140705 | R1805 | 5142220 | E950ED | 100 |
| | 1" X 1/2" | E0141005 | R1805 1 | ----- | E950FD CAR | 3 BAGS X 100 |
| | 1" X 3/4" | E0141007 | R1806 | 5142221 | E950FE | 100 |
| | 1 1/4" X 3/4" | E0141207 | R1807 1 | ----- | E950GE CAR | 2 BAGS X 25 |
| | 1 1/4" X 1" | E0141210 | R1807 | 5142222 | E950GF | 50 |
| | 1 1/2" X 1" | E0141510 | R1808 1 | ----- | E950HF CAR | 50 |
| | 1 1/2" X 1 1/4" | E0141512 | R1808 | 514223 | E950HG CAR | 50 |
| | 2" X 1" | E0142010 | R1809 1 | ----- | ----- | 50 |
| | 2" X 1 1/4" | E0142012 | R1809 | ----- | E950JG CAR | 25 |
| | 2" X 1 1/2" | E0142015 | R1810 | 5142224 | E950JH CAR | 25 |
| | 2 1/2" X 2" | E0142520 | R1811 | 5142225 | E950KJ CAR | 25 |
| | 3" X 2" | E0143020 | R1812 1 | ----- | E950LJ CAR | 25 |
| | 3" X 2 1/2" | E0143025 | R1812 | 5142226 | E950LK | 25 |
| | 4" X 2" | E0144020 | R1813 1 | ----- | ----- | 15 |
| | 4" X 3" | E0144030 | R1813 | 5142227 | E950NL | 20 |
| | 4" 3 1/2" | E0144035 | R1814 | 5142229 | ----- | 20 |
| **SINGLE GANG COVER PLATE - F SERIES** | | | | | | |
| 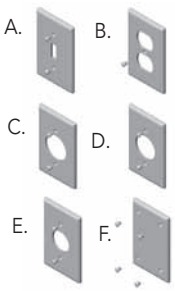 | A. TOGGLE | E046002 | RTSC15/10 | ----- | ----- | 100 |
| | B. DUPLEX | E046001 | RDRC15/10 | ----- | ----- | 100 |
| | C. 15 AMP | E046004 | R20RC15/10 | ----- | ----- | 100 |
| | D. 20 AMP | E046003 | R20 3RC15/10 | ----- | ----- | 100 |
| | E. 30 AMP | E046005 | R30 3RC15/10 | ----- | ----- | 100 |
| | F. BLANK W/ GASKET | E046006 | RBRC15/10 | 5133362 | E980CN CAR | 50 |

# Rigid PVC Conduit Fittings

| Item | Size in Inches | Part Number | Reference Royal | Reference CANTEX | Reference Thomas & Betts - Carlon | Carton Qty |
|---|---|---|---|---|---|---|
| **SINGLE GANG WEATHERPROOF COVER PLATE** | | | | | | |
| 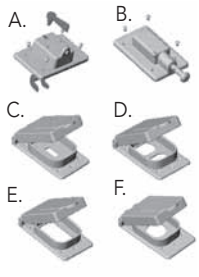 | A. TOGGLE S/ COVER | E047002 | RVSC15/10 | 5133330 | E98TSCN CAR | 10 |
| | B. PLUNGER S/ COVER | E047008 | RVPT15/10 | 5133335 | ------ | 10 |
| | C. TOGGLE | E047009 | RWTG15/10 | 5133361 | E98SSNCN CAR | 10 |
| | D. DUPLEX | E047001 | RWDR15/10 | 5133352 | E98GDRN CAR | 10 |
| | D. DUPLEX WHITE | E047010 | RWDR15/10W | ------ | ------ | 20 |
| | E. GROUND FAULT | E047007 | RWGF15/10 | 5133348 | E98GFCN CAR | 10 |
| | E. GROUND FAULT WHITE | E047011 | RWGF15/10W | ------ | ------ | 20 |
| | F. 15 AMP | E047003 | RWTL15 | 5133350 | E98SRCN CAR | 10 |
| | F. 20 AMP | E047004 | RWTL20 | 5133320 | E98G20N | 10 |
| | F. 30 AMP | E047005 | RWTL30 | 5133321 | E98G30N CAR | 10 |
| | F. 50 AMP | E047006 | RWTL50 | 5133322 | E98G5FN CAR | 10 |
| **DOUBLE GANG WEATHERPROOF COVER PLATE** | | | | | | |
| 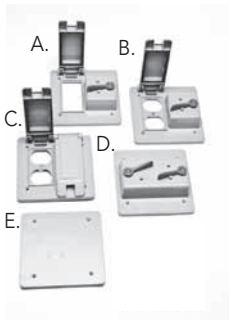 | B. GFI & TOGGLE | E049005 | ------ | 5133345 | E9G2GTN CAR | 10 |
| | C. DUPLEX & TOGGLE | E049006 | ------ | 5133337 | E9GDSN CAR | 10 |
| | D. DOUBLE DU PLEX | E049007 | ------ | 5133347 | E9GDDN CAR | 10 |
| | E. TOGGLE | E049008 | ------ | 5133331 | E9G2SSN | 10 |
| | F. BLANK | E049009 | | 5133410 | E9802CN CAR | 25 |
| **SINGLE GANG BOX - F SERIES** | | | | | | |
| 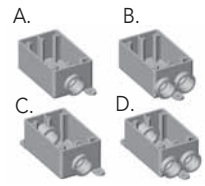 | A. 1/2" FS | E042001 | RFS10 | 5133363 | E980DFN | 10 |
| | A. 3/4" FS | E042002 | RFS15 | 5133364 | E980EFN | 10 |
| | B. 1/2" FSS | E042003 | RFSS10 | 5133540 | E982DFN | 10 |
| | B. 3/4" FSS | E042004 | RFSS15 | 5133542 | E982EFN | 10 |
| | C. 1/2" FSC | E042005 | RFSC10 | 5133463 | E981DFN | 10 |
| | C. 3/4" FSC | E042006 | RFSC15 | 5133464 | E981EFN | 10 |
| | D. 1/2" FSCC | E042007 | RFSCC10 | 5133544 | E979DFN CAR | 10 |
| | D. 3/4" FSCC | E042008 | RFSCC15 | 5133545 | E979ERN CAR | 10 |
| **SINGLE GANG DEEP BOX - FD SERIES** | | | | | | |
| 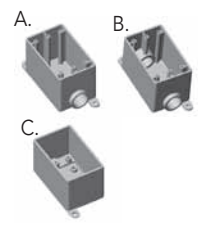 | A. 1/2" FDS | E043001 | RFDS10 | 5133300 | E9801DN | 10 |
| | A. 3/4" FDS | E043002 | RFDS15 | 5133301 | E9801EN | 10 |
| | A. 1" FDS | E043003 | RFDS20 | 5133302 | E9801FN | 10 |
| | B. 1/2" FDC | E043004 | RFDC10 | 5133310 | E9811DN | 10 |
| | B. 3/4" FDC | E043005 | RFDC15 | 5133311 | E9811EN | 10 |
| | B. 1" FDC | E043006 | RFDC20 | 5133312 | E9811FN | 10 |
| | C. BLANK | E043007 | RFD | 5133420 | E9801 | 10 |

# Rigid PVC Conduit Fittings

| Item | Size in Inches | Part Number | Reference Royal | Reference CANTEX | Reference Thomas & Betts - Carlon | Carton Qty |
|---|---|---|---|---|---|---|
| **DOUBLE GANG BOX - F SERIES** | | | | | | |
| 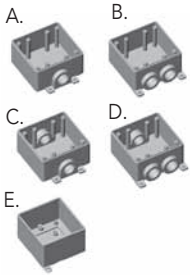 | A. 1/2" FS | E041001 | ----- | 5133380 | E9802D | 5 |
| | A. 3/4" FS | E041002 | ----- | 5133381 | E9802E | 5 |
| | A. 1" FS | E041003 | ----- | 5133382 | E9802F | 5 |
| | B. 1/2" FSS | E041004 | ----- | 5133390 | ----- | 5 |
| | B. 3/4" FSS | E041005 | ----- | 5133391 | ----- | 5 |
| | B. 1" FSS | E041006 | ----- | 5133392 | ----- | 5 |
| | C. 1/2" FSC | E041007 | ----- | 5133370 | E9812D | 5 |
| | C. 3/4" FSC | E041008 | ----- | 5133371 | E9812E | 5 |
| | C. 1" FSC | E041009 | ----- | 5133372 | E9812F | 5 |
| | D. 1/2" FSCC | E041011 | ----- | 5133400 | ----- | 5 |
| | D. 3/4" FSCC | E041012 | ----- | 5133401 | ----- | 5 |
| | D. 1" FSCC | E041013 | ----- | 5133402 | ----- | 5 |
| | E. BLANK | E041010 | ----- | ----- | E9802 | 5 |
| **OCTAGONAL BOX** | | | | | | |
|  | 4" X 1 1/2" (3/4" X1/2") | E028150 | ROB15/10 | ----- | ----- | 20 |
| | 4" X 2" (1") | E028200 | ROB20 | ----- | ----- | 12 |
| **KO PLUG** | | | | | | |
| | 3/4" | E067075 | RKO15 | ----- | ----- | 1 |
| | 1" | E067100 | RTKO20 | ----- | ----- | 1 |
| **OCTAGONAL BOX EXTENSION RING** | | | | | | |
|  | 1" | E029100 | RXR20 | ----- | ----- | 20 |
| | 2" | E029200 | RXR35 | ----- | ----- | 20 |

# Rigid PVC Conduit Fittings

| Item | Size in Inches | Part Number | Reference Royal | Reference CANTEX | Reference Thomas & Betts - Carlon | Carton Qty |
|---|---|---|---|---|---|---|
| **DUPLEX FLOOR BOX/ LEVEL RING/ POUR COVER/ REDUCER BUSHING** | | | | | | |
|  | 4 - 3/4" | E068004 | RFDB4 | 5133760 | E971FB | 9 |
| | 2 - 1", 2 - 3/4" | E068001 | RFDB2 | 5133758 | E971FB | 9 |
| **DUPLEX FLOOR BOX COVER** | | | | | | |
|  | POLY BRONZE COVER | E068003 | RFDBC | 5133678 | | 10 |
| **JUNCTION BOX WITH GASKET** | | | | | | |
| 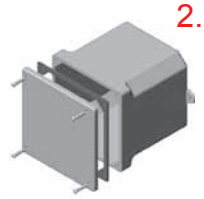 | 4" X 4" X 2" | E051442 | RJB442 | 5133705 | E989NNJ CAR | 10 |
| | 4" X 4" X 4" | E051444 | RJB444 | 5133709 | E987N CAR | 10 |
| | 4" X 4" X 6" | E051446 | RJB446 | 5133707 | E989NNR CAR | 10 |
| | 5" X 5" X 2" | E051552 | RJB552 | 5133706 | E989PPJ CAR | 10 |
| | 6" X 6" X 4" | E051664 | RJB664 | 5133710 | E987R CAR | 10 |
| | 6" X 6" X 6" | E051666 | RJB666 | 5133711 | E989RRR UPC | 5 |
| | 8" X 8" X 4" | E051884 | RJB884 | 5133712 | E989N CAR | 5 |
| | 8" X 8" X 7" | E051887 | RJB887 | 5133708 | E989SSX UPC | 4 |
| | 12" X 12" X 4" | E05112124 | RJB12124 | 5133714 | E989UUN | 2 |
| | 12" X 12" X 6" | E05112126 | RJB12126 | 5133713 | E989R UPC | 2 |
| | 12" X 12" X 8" | E05112128 | RJB12128 | | | 3 |
| **JUNCTION BOX ADAPTERS** | | | | | | |
| 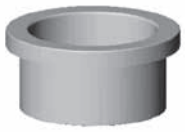 | 1/2" | E059050 | RJBA10 | 5133715 | E996D | 100 |
| | 3/4" | E059075 | RJBA15 | 5133716 | E996E | 100 |
| | 1" | E059100 | RJBA20 | 5133717 | E996F | 100 |
| | 1 1/4" | E059125 | RJBA25 | 5133718 | E996G | 50 |
| | 1 1/2" | E059150 | RJBA30 | 5133719 | E996H | 50 |
| | 2" | E059200 | RJBA35 | 5133720 | E996J | 25 |
| | 2 1/2" | E059250 | RJBA40 | 5133721 | E996K CAR | 10 |
| | 3" | E059300 | RJBA45 | 5133722 | E996L | 10 |
| | 3 1/2" | E059350 | RJBA50 | 5133723 | | 10 |
| | 4" | E059400 | RJBA55 | 5133724 | E996N | 10 |

# Rigid PVC Conduit Fittings

| Item | Size in Inches | Part Number | Reference Royal | Reference CANTEX | Reference Thomas & Betts - Carlon | Carton Qty |
|---|---|---|---|---|---|---|
| **METER RISER KIT** | | | | | | |
| 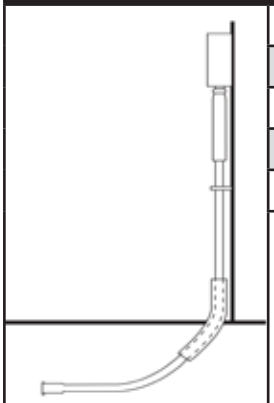 | 1 1/4″ | E092125 | ----- | ----- | ----- | 1 |
| | 1 1/2″ | E092150 | ----- | ----- | ----- | 1 |
| | 2″ | E092200 | ----- | ----- | ----- | 1 |
| | 2 1/2″ | E092250 | ----- | ----- | ----- | 1 |
| | 3″ | E092300 | ----- | ----- | ----- | 1 |
| **SLIP METER RISER** | | | | | | |
|  | 2″ | E093200 | ----- | 5144028 | E954JXX | 20 |
| | 2 1/2″ | E093250 | ----- | 5144030 | E954KXX | 15 |
| | 3″ | E093300 | ----- | 5144043 | E954LXX | 10 |
| | 4″ | E093400 | ----- | 5144027 | E954NXX | 5 |
| **DUCT - INTERMEDIATE VERTICAL LOCK SPACER** | | | | | | |
|  | 2 X 1 1/2″ | IS2015 | IS2015 | ----- | ----- | 350 |
| | 2 X 2″ | IS2020 | IS2020 | ----- | ----- | 300 |
| | 2 X 3″ | IS2030 | IS2030 | ----- | ----- | 200 |
| | 3 X 1 1/2″ | IS3015 | IS3015 | ----- | ----- | 225 |
| | 3 X 2″ | IS3020 | IS3020 | ----- | ----- | 200 |
| | 3 X 3″ | IS3030 | IS3030 | ----- | ----- | 125 |
| | 4 X 1 ″ | IS4010 | IS4010 | ----- | ----- | 200 |
| | 4 X 1 1/2″ | IS4015 | IS4015 | ----- | ----- | 150 |
| | 4 X 2″ | IS4020 | IS4020 | ----- | ----- | 125 |
| | 4 X 3″ | IS4030 | IS4030 | ----- | ----- | 90 |
| | 5 X 1 1/2″ | IS5015 | IS5015 | ----- | ----- | 100 |
| | 5 X 2″ | IS5020 | IS5020 | ----- | ----- | 100 |
| | 5 X 3″ | IS5030 | IS5030 | ----- | ----- | 80 |
| | 6 X 1 1/2″ | IS6015 | IS6015 | ----- | ----- | 100 |
| | 6 X 2″ | IS6020 | IS6020 | ----- | ----- | 90 |
| | 6 X 3″ | IS6030 | IS6030 | ----- | ----- | 70 |
| | 8 X 1 1/2″ | IS8015 | ----- | ----- | ----- | 60 |
| | 8 X 2″ | IS8020 | ----- | ----- | ----- | 60 |

# Rigid PVC Conduit Fittings

| Item | Size in Inches | Part Number | Reference Royal | Reference CANTEX | Reference Thomas & Betts - Carlon | Carton Qty |
|---|---|---|---|---|---|---|
| **DUCT - BASE VERTICAL LOCK SPACER** | | | | | | |
|  | 2 X 1 1/2" | BS2015 | BS2015 | ----- | ----- | 250 |
| | 2 X 2" | BS2020 | BS2020 | ----- | ----- | 225 |
| | 2 X 3" | BS2030 | BS2030 | ----- | ----- | 225 |
| | 3 X 1 1/2" | BS3015 | BS3015 | ----- | ----- | 175 |
| | 3 X 2" | BS3020 | BS3020 | ----- | ----- | 155 |
| | 3 X 3" | BS3030 | BS3030 | ----- | ----- | 150 |
| | 4 X 1 " | BS4010 | BS4010 | ----- | ----- | 175 |
| | 4 X 1 1/2" | BS4015 | BS4015 | ----- | ----- | 140 |
| | 4 X 2" | BS4020 | BS4020 | ----- | ----- | 140 |
| | 4 X 3" | BS4030 | BS4030 | ----- | ----- | 120 |
| | 5 X 1 1/2" | BS5015 | BS5015 | ----- | ----- | 120 |
| | 5 X 2" | BS5020 | BS5020 | ----- | ----- | 120 |
| | 5 X 3" | BS5030 | BS5030 | ----- | ----- | 100 |
| | 6 X 1 1/2" | BS6015 | BS6015 | ----- | ----- | 100 |
| | 6 X 2" | BS6020 | BS6020 | ----- | ----- | 100 |
| | 6 X 3" | BS6030 | BS6030 | ----- | ----- | 95 |
| | 8 X 1 1/2" | BS8015 | ----- | ----- | ----- | 50 |
| | 8 X 2" | BS8020 | ----- | ----- | ----- | 50 |
| **UNIVERSAL PLUG W/PULLING EYE** | | | | | | |
|  | 2" | E091200 | PLUG02 | 5315258 | P258JT | 70 |
| | 3" | E091300 | PLUG03 | 5315260 | P258LT | 45 |
| | 4" | E091400 | PLUG04 | 5315262 | P258NT | 80 |
| | 5" | E091500 | PLUG05 | 5315263 | P258PT | 45 |
| | 6" | E091600 | PLUG06 | 5315264 | P258RT | 35 |
| **ECOVOC LOW VOC / CLEAR CEMENT** | | | | | | |
|   | PINT | RVOC475 | RVOC475 | 7210612 | VC9963 | 12 |
| | QUART | RVOC950ML | RVOC950ML | 7210613 | VC9962 | 12 |

# Rigid PVC Conduit Fittings

| Item | Size in Inches | Part Number | Reference Royal | Reference CANTEX | Reference Thomas & Betts - Carlon | Carton Qty |
|---|---|---|---|---|---|---|
| **VINYL SIDING ELECTRICAL MOUNT** | | | | | | |
|  | 7 1/2" X 7 1/2" | 10000 | ----- | ----- | ----- | 10 |
| | 7 5/8" X 12" | 41000 | ----- | ----- | ----- | 10 |
| | 7 1/2" X 7 3/4" | 13000 | ----- | ----- | ----- | 10 |
| | 6" X 4 1/2" | 43000 | ----- | ----- | ----- | 10 |
| | 5 1/2" X 7 6/16" | 44000 | ----- | ----- | ----- | 10 |
| | 14 1/2" X 19" | 42000 | ----- | ----- | ----- | 1 |
| | 7" X 7" | 17000 | ----- | ----- | ----- | 10 |
| **SCH 40 STANDARD ELBOWS - 90° ELBOW - PLAIN END** | | | | | | |
|  | 1/2" | E018050 | REE1090PE | 5133823 | UA9AD | 50 |
| | 3/4" | E018075 | REE1590PE | 5133824 | UA9AE | 35 |
| | 1" | E018100 | REE2090PE | 5133825 | UA9AF | 20 |
| | 1 1/4" | E018125 | REE2590PE | 5133826 | UA9AG | 30 |
| | 1 1/2" | E018150 | REE3090PE | 5133827 | UA9AH | 30 |
| | 2" | E018200 | REE3590PE | 5133828 | UA9AJ | 15 |
| | 2 1/2" | E018250 | REE4090PE | 5133829 | UA9AK CAR | 18 |
| | 3" | E018300 | REE4590PE | 5133830 | UA9AL | 14 |
| | 3 1/2" | E018350 | REE5090PE | 5133831 | UA9AM | 12 |
| | 4" | E018400 | REE5590PE | 5133832 | UA9AN | 10 |
| | 5" | E018500 | REE6090PE | 5133835 | UA9AP | 1 |
| | 6" | E018600 | REE6590PE | 5133834 | UA9AR | 1 |
| **SCH 40 STANDARD ELBOWS - 45° ELBOW - PLAIN END** | | | | | | |
|  | 1/2" | E019050 | REE1045PE | 5133763 | UA7AD | 50 |
| | 3/4" | E019075 | REE1545PE | 5133764 | UA7AE | 25 |
| | 1" | E019100 | REE2045PE | 5133765 | UA7AF | 20 |
| | 1 1/4" | E019125 | REE2545PE | 5133766 | UA7AG | 25 |
| | 1 1/2" | E019150 | REE3045PE | 5133767 | UA7AH | 20 |
| | 2" | E019200 | REE3545PE | 5133768 | UA7AJ | 10 |
| | 2 1/2" | E019250 | REE4045PE | 5133769 | UA7AK | 20 |
| | 3" | E019300 | REE4545PE | 5133770 | UA7AL CAR | 8 |
| | 3 1/2" | E019350 | REE5045PE | 5133771 | UA7AM | 5 |
| | 4" | E019400 | REE5545PE | 5133772 | UA7AN | 20 |
| | 5" | E019500 | REE6045PE | 5133773 | UA7AP | 1 |
| | 6" | E019600 | REE6545PE | 5133774 | UA7AR | 1 |

# Rigid PVC Conduit Fittings

| Item | Size in Inches | Part Number | Reference Royal | Reference CANTEX | Reference Thomas & Betts - Carlon | Carton Qty |
|---|---|---|---|---|---|---|
| **SCH 40 STANDARD ELBOWS - 30° ELBOW - PLAIN END** | | | | | | |
|  | 1/2″ | E020050 | REE1030PE | 5133755 | UA6AD | 50 |
| | 3/4″ | E020075 | REE1530PE | 5133744 | UA6AE | 25 |
| | 1″ | E020100 | REE2030PE | 5133745 | UA6AF | 20 |
| | 1 1/4″ | E020125 | REE2530PE | 5133746 | UA6AG | 25 |
| | 1 1/2″ | E020150 | REE3030PE | 5133747 | UA6AH | 50 |
| | 2″ | E020200 | REE3530PE | 5133748 | UA6AJ | 10 |
| | 2 1/2″ | E020250 | REE4030PE | 5133749 | UA6AK | 20 |
| | 3″ | E020300 | REE4530PE | 5133750 | UA6AL | 8 |
| | 3 1/2″ | E020350 | REE5030PE | 5133751 | UA6AM | 5 |
| | 4″ | E020400 | REE5530PE | 5133775 | UA6AN | 20 |
| | 5″ | E020500 | REE6030PE | 5133753 | UA6AP | 1 |
| | 6″ | E020600 | REE6530PE | 5133754 | UA6AR | 1 |
| **SCH 40 STANDARD ELBOWS - 22 1/2° ELBOW - PLAIN END** | | | | | | |
|  | 1 1/2″ | E084150 | ----- | 5134094 | UA5AH | 20 |
| | 2″ | E084200 | ----- | 5134067 | UA5AJ | 10 |
| | 2 1/2″ | E084250 | ----- | 5134096 | UA5AK | 20 |
| | 3″ | E084300 | ----- | 5134068 | UA5AL | 8 |
| | 3 1/2″ | E084350 | ----- | 5134095 | UA5AM | 5 |
| | 4″ | E084400 | ----- | 5133757 | UA5AN | 20 |
| | 5″ | E084500 | ----- | 5134037 | UA5AP | 1 |
| | 6″ | E084600 | ----- | 5133901 | UA5AR | 1 |
| **SCH 40 STANDARD ELBOWS - 11 1/4° ELBOW - PLAIN END** | | | | | | |
|  | 2″ | E087200 | ----- | ----- | UA3AJ | 1 |
| | 3″ | E087300 | ----- | ----- | UA3AL | 1 |
| | 4″ | E087400 | ----- | ----- | UA3AN | 1 |
| | 5″ | E087500 | ----- | ----- | UA3AP | 1 |

# Rigid PVC Conduit Fittings

| Item | Size in Inches | Part Number | Reference Royal | Reference CANTEX | Reference Thomas & Betts - Carlon | Carton Qty |
|---|---|---|---|---|---|---|
| SCH 40 STANDARD ELBOWS - 90° ELBOW - BELL END | | | | | | |
|  | 1/2″ | E021050 | REE1090 | 5233823 | UA9ADB | 50 |
| | 3/4″ | E021075 | REE1590 | 5233824 | UA9AEB | 35 |
| | 1″ | E021100 | REE2090 | 5233825 | UA9AFB | 20 |
| | 1 1/4″ | E021125 | REE2590 | 5233826 | UA9AGB | 30 |
| | 1 1/2″ | E021150 | REE3090 | 5233827 | UA9AHB | 30 |
| | 2″ | E021200 | REE3590 | 5233828 | UA9AJB | 15 |
| | 2 1/2″ | E021250 | REE4090 | 5233829 | UA9AKB CAR | 18 |
| | 3″ | E021300 | REE4590 | 5233830 | UA9ALB CAR | 14 |
| | 3 1/2″ | E021350 | REE5090 | 5233831 | UA9AMB | 12 |
| | 4″ | E021400 | REE5590 | 5233832 | UA9ANB | 10 |
| | 5″ | E021500 | REE6090 | 5233835 | UA9APB | 1 |
| | 6″ | E021600 | REE6590 | 5233834 | UA9ARB | 1 |
| SCH 40 STANDARD ELBOWS - 45° ELBOW - BELL EN | | | | | | |
|  | 1/2″ | E022050 | REE1045 | 5233763 | UA7ADB | 50 |
| | 3/4″ | E022075 | REE1545 | 5233764 | UA7AEB | 25 |
| | 1″ | E022100 | REE2045 | 5233765 | UA7AFB | 20 |
| | 1 1/4″ | E022125 | REE2545 | 5233766 | UA7AGB | 25 |
| | 1 1/2″ | E022150 | REE3045 | 5233767 | UA7AHB | 20 |
| | 2″ | E022200 | REE3545 | 5233768 | UA7AJB | 10 |
| | 2 1/2″ | E022250 | REE4045 | 5233769 | UA7AKB | 20 |
| | 3″ | E022300 | REE4545 | 5233770 | UA7ALB | 8 |
| | 3 1/2″ | E022350 | REE5045 | 5233771 | UA7AMB | 5 |
| | 4″ | E022400 | REE5545 | 5233772 | UA7ANB | 20 |
| | 5″ | E022500 | REE6045 | 5233773 | UA7APB | 1 |
| | 6″ | E022600 | REE6545 | 5233774 | UA7ARB | 1 |
| SCH 40 STANDARD ELBOWS - 30° ELBOW - BELL END | | | | | | |
|  | 1/2″ | E072050 | REE1030 | | UA6ADB | 50 |
| | 3/4″ | E072075 | REE1530 | | UA6AEB | 35 |
| | 1″ | E072100 | REE2030 | | UA6AFB | 50 |
| | 1 1/4″ | E072125 | REE2530 | | UA6AGB | 30 |
| | 1 1/2″ | E072150 | REE3030 | | UA6AHB | 50 |
| | 2″ | E072200 | REE3530 | 5233748 | UA6AJB | 10 |
| | 2 1/2″ | E072250 | REE4030 | | UA6AKB | 10 |
| | 3″ | E072300 | REE4530 | 5233750 | UA6ALB | 8 |
| | 3 1/2″ | E072350 | REE5030 | 5233751 | UA6AMB | 5 |
| | 4″ | E072400 | REE5530 | 5233776 | UA6ANB | 20 |
| | 5″ | E072500 | REE6030 | 5233753 | UA6APB | 1 |
| | 6″ | E072600 | REE6530 | 5233754 | UA6ARB | 1 |

# Rigid PVC Conduit Fittings

| Item | Size in Inches | Part Number | Reference Royal | Reference CANTEX | Reference Thomas & Betts - Carlon | Carton Qty |
|---|---|---|---|---|---|---|
| **SCH 80 STANDARD ELBOWS - SCH80 90° ELBOW - PLAIN END** | | | | | | |
|  | 1/2″ | E085050 | ----- | 5121053 | UB9AD | 50 |
| | 3/4″ | E085075 | ----- | 5121054 | UB9AE | 35 |
| | 1″ | E085100 | ----- | 5121055 | UB9AF | 20 |
| | 1 1/4″ | E085125 | ----- | 5121056 | UB9AG | 30 |
| | 1 1/2″ | E085150 | ----- | 5121057 | UB9AH | 30 |
| | 2″ | E085200 | ----- | 5121058 | UB9AJ | 15 |
| | 2 1/2″ | E085250 | ----- | 5121059 | UB9AK CAR | 18 |
| | 3″ | E085300 | ----- | 5121060 | UB9AL CAR | 14 |
| | 4″ | E085400 | ----- | 5121061 | UB9AN | 10 |
| | 5″ | E085500 | ----- | 5121062 | UB9AP | 1 |
| | 6″ | E085600 | ----- | 5121063 | UB9AR | 1 |
| **SCH 80 STANDARD ELBOWS - SCH80 45° ELBOW - PLAIN END** | | | | | | |
|  | 1/2″ | E086050 | ----- | 5121003 | UB7AD | 50 |
| | 3/4″ | E086075 | ----- | 5121004 | UB7AE UPC | 25 |
| | 1″ | E086100 | ----- | 5121005 | UB7AF UPC | 20 |
| | 1 1/4″ | E086125 | ----- | 5121006 | UB7AG | 25 |
| | 1 1/2″ | E086150 | ----- | 5121007 | UB7AH | 20 |
| | 2″ | E086200 | ----- | 5121008 | UB7AJ UPC | 10 |
| | 2 1/2″ | E086250 | ----- | 5121009 | UB7AK | 20 |
| | 3″ | E086300 | ----- | 5121010 | UB7AL | 8 |
| | 4″ | E086400 | ----- | 5121011 | UB7AN | 20 |
| | 5″ | E086500 | ----- | 5121012 | UB7AP | 1 |
| | 6″ | E086600 | ----- | 5121013 | UB7AR | 1 |
| **SCH. 40 SPECIAL RADIUS ELBOW PLAIN END - 90° 24″ RADIUS** | | | | | | |
|  | 1″ | E07510024 | ----- | 5133859 | UA9DF | 1 |
| | 1 1/4″ | E07512524 | ----- | 5133883 | UA9DG | 1 |
| | 1 1/2″ | E07515024 | ----- | 5133873 | UA9DH | 1 |
| | 2″ | E07520024 | ----- | 5133836 | UA9DJ | 1 |
| | 2 1/2″ | E07525024 | ----- | 5133847 | UA9DK | 1 |
| | 3″ | E07530024 | ----- | 5133837 | UA9DL | 1 |
| | 3 1/2″ | E07535024 | ----- | 5133893 | UA9DM | 1 |
| | 4″ | E07540024 | ----- | 5133822 | UA9DN | 1 |
| | 5″ | E07550024 | ----- | ----- | ----- | 1 |
| | 6″ | E07560024 | ----- | ----- | ----- | 1 |

# Rigid PVC Conduit Fittings

| Item | Size in Inches | Part Number | Reference Royal | Reference CANTEX | Reference Thomas & Betts - Carlon | Carton Qty |
|---|---|---|---|---|---|---|
| **SCH. 40 SPECIAL RADIUS ELBOW PLAIN END - 90° 36" RADIUS** | | | | | | |
|  | 1" | E07510036 | ----- | 5133852 | UA9FF | 1 |
| | 1 1/4" | E07512536 | ----- | 5133884 | UA9FG | 1 |
| | 1 1/2" | E07515036 | ----- | 5133866 | UA9FH | 1 |
| | 2" | E07520036 | ----- | 5133848 | UA9FJ UPC | 1 |
| | 2 1/2" | E07525036 | ----- | 5133857 | UA9FK UPC | 1 |
| | 3" | E07530036 | ----- | 5133820 | UA9FL | 1 |
| | 3 1/2" | E07535036 | ----- | 5133818 | UA9FM | 1 |
| | 4" | E07540036 | ----- | 5133821 | UA9FN | 1 |
| | 5" | E07550036 | ----- | 5133841 | UA9FP | 1 |
| | 6" | E07560036 | ----- | 5133877 | UA9FR | 1 |
| **SCH. 40 SPECIAL RADIUS ELBOW PLAIN END - 90° 48" RADIUS** | | | | | | |
|  | 1" | E07510048 | ----- | 5133864 | UA9HF | 1 |
| | 1 1/4" | E07512548 | ----- | 5133871 | UA9HG | 1 |
| | 1 1/2" | E07515048 | ----- | 5133865 | UA9HH | 1 |
| | 2" | E07520048 | ----- | 5133876 | UA9HJ | 1 |
| | 2 1/2" | E07525048 | ----- | 5133849 | UA9HK | 1 |
| | 3" | E07530048 | ----- | 5133817 | UA9HL | 1 |
| | 3 1/2" | E07535048 | ----- | 5133892 | UA9HM | 1 |
| | 4" | E07540048 | ----- | 5133843 | UA9HN | 1 |
| | 5" | E07550048 | ----- | 5133842 | UA9HP | 1 |
| | 6" | E07560048 | ----- | 5133816 | UA9HR | 1 |
| **SCH. 40 SPECIAL RADIUS ELBOW PLAIN END - 45° 24" RADIUS** | | | | | | |
|  | 1" | E07610024 | ----- | 5133875 | UA7DF | 1 |
| | 1 1/4" | E07612524 | ----- | 5133941 | UA7DG | 1 |
| | 1 1/2" | E07615024 | ----- | 5133874 | UA7DH | 1 |
| | 2" | E07620024 | ----- | 5133815 | UA7DJ | 1 |
| | 2 1/2" | E07625024 | ----- | 5133935 | UA7DK | 1 |
| | 3" | E07630024 | ----- | 5133800 | UA7DL | 1 |
| | 3 1/2" | E07635024 | ----- | 5133802 | UA7DM | 1 |
| | 4" | E07640024 | ----- | 5133812 | UA7DN | 1 |
| | 5" | E07650024 | ----- | ----- | ----- | 1 |
| | 6" | E07660024 | ----- | ----- | ----- | 1 |

# Rigid PVC Conduit Fittings

| Item | Size in Inches | Part Number | Reference Royal | Reference CANTEX | Reference Thomas & Betts - Carlon | Carton Qty |
|---|---|---|---|---|---|---|
| **SCH. 40 SPECIAL RADIUS ELBOW PLAIN END - 45° 36" RADIUS** | | | | | | |
|  | 1" | E07610036 | ------ | 5133919 | UA7FF | 1 |
| | 1 1/4" | E07612536 | ------ | 5133956 | UA7FG | 1 |
| | 1 1/2" | E07615036 | ------ | 5133810 | UA7FH | 1 |
| | 2" | E07620036 | ------ | 5133778 | UA7FJ | 1 |
| | 2 1/2" | E07625036 | ------ | 5133801 | UA7FK | 1 |
| | 3" | E07630036 | ------ | 5133779 | UA7FL | 1 |
| | 3 1/2" | E07635036 | ------ | 5133939 | UA7FM | 1 |
| | 4" | E07640036 | ------ | 5133777 | UA7FN | 1 |
| | 5" | E07650036 | ------ | 5133780 | UA7FP | 1 |
| | 6" | E07660036 | ------ | 5133880 | UA7FR | 1 |
| **SCH. 40 SPECIAL RADIUS ELBOW PLAIN END - 45° 48" RADIUS** | | | | | | |
|  | 1" | E07610048 | ------ | 5133940 | UA7HF | 1 |
| | 1 1/4" | E07612548 | ------ | 5133942 | UA7HG | 1 |
| | 1 1/2" | E07615048 | ------ | 5133811 | UA7HH | 1 |
| | 2" | E07620048 | ------ | 5133798 | UA7HJ | 1 |
| | 2 1/2" | E07625048 | ------ | 5134010 | UA7HK | 1 |
| | 3" | E07630048 | ------ | 5133781 | ------ | 1 |
| | 3 1/2" | E07635048 | ------ | 5133979 | ------ | 1 |
| | 4" | E07640048 | ------ | 5133776 | UA7HN | 1 |
| | 5" | E07650048 | ------ | 5133814 | UA7HP | 1 |
| | 6" | E07660048 | ------ | 5133813 | UA7HR | 1 |
| **SCH. 40 SPECIAL RADIUS ELBOW BELLED - 90° 24" RADIUS** | | | | | | |
|  | 2" | E07920024 | ------ | 5133924 | UA9DJB UPC | 1 |
| | 2 1/2" | E07925024 | ------ | 5233847 | UA9DKB UPC | 1 |
| | 3" | E07930024 | ------ | 5233837 | UA9DLB UPC | 1 |
| | 3 1/2" | E07935024 | ------ | 5233893 | UA9DMB | 1 |
| | 4" | E07940024 | ------ | 5233822 | UA9DNB | 1 |
| **SCH. 40 SPECIAL RADIUS ELBOW BELLED - 90° 36" RADIUS** | | | | | | |
|  | 2" | E07920036 | ------ | 5233848 | UA9FJB | 1 |
| | 2 1/2" | E07925036 | ------ | 5233857 | UA9FKB | 1 |
| | 3" | E07930036 | ------ | 5233930 | UA9FLB | 1 |
| | 3 1/2" | E07935036 | ------ | 5233818 | UA9FMB | 1 |
| | 4" | E07940036 | ------ | 5233842 | UA9FNB | 1 |
| | 5" | E07950036 | ------ | 5233841 | UA9FPB | 1 |
| | 6" | E07960036 | ------ | 5233877 | UA9FRB | 1 |

# Rigid PVC Conduit Fittings

| Item | Size in Inches | Part Number | Reference Royal | Reference CANTEX | Reference Thomas & Betts - Carlon | Carton Qty |
|---|---|---|---|---|---|---|
| **SCH. 40 SPECIAL RADIUS ELBOW BELLED - 90° 48" RADIUS** | | | | | | |
|  | 2" | E07920048 | ----- | 5233876 | UA9HJB | 1 |
| | 2 1/2" | E07925048 | ----- | 5233849 | UA9HKB | 1 |
| | 3" | E07930048 | ----- | 5233817 | UA9HLB | 1 |
| | 3 1/2" | E07935048 | ----- | 5233892 | ----- | 1 |
| | 4" | E07940048 | ----- | 5233843 | UA9HNB | 1 |
| | 5" | E07950048 | ----- | 5233868 | UA9HPB | 1 |
| | 6" | E07960048 | ----- | 5233816 | UA9HRB | 1 |
| **SCH. 40 SPECIAL RADIUS ELBOW BELLED - 45° 24" RADIUS** | | | | | | |
|  | 2" | E08020024 | ----- | 5233815 | UA7DJB | 1 |
| | 2 1/2" | E08025024 | ----- | 5233935 | UA7DKB | 1 |
| | 3" | E08030024 | ----- | 5233800 | UA7DLB | 1 |
| | 3 1/2" | E08035024 | ----- | 5233802 | ----- | 1 |
| | 4" | E08040024 | ----- | 5233812 | UA7DNB | 1 |
| **SCH. 40 SPECIAL RADIUS ELBOW BELLED - 45° 36" RADIUS** | | | | | | |
|  | 2" | E08020036 | ----- | 5233778 | UA7FJB | 1 |
| | 2 1/2" | E08025036 | ----- | 5233801 | UA7FKB | 1 |
| | 3" | E08030036 | ----- | 5233779 | UA7FLB | 1 |
| | 3 1/2" | E08035036 | ----- | 5233939 | ----- | 1 |
| | 4" | E08040036 | ----- | 5233777 | UA7FNB | 1 |
| | 5" | E08050036 | ----- | 5233780 | UA7FPB | 1 |
| | 6" | E08060036 | ----- | 5133894 | UA7FRB | 1 |
| **SCH. 40 SPECIAL RADIUS ELBOW BELLED - 45° 48" RADIUS** | | | | | | |
| 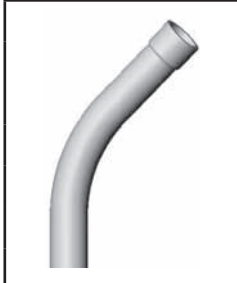 | 2" | E08020048 | ----- | 5133759 | UA7HJB | 1 |
| | 2 1/2" | E08025048 | ----- | 5233785 | ----- | 1 |
| | 3" | E08030048 | ----- | 5233782 | UA7HLB | 1 |
| | 3 1/2" | E08035048 | ----- | 5233943 | ----- | 1 |
| | 4" | E08040048 | ----- | 5133761 | UA7HNB | 1 |
| | 5" | E08050048 | ----- | 5233781 | UA7HPB | 1 |
| | 6" | E08060048 | ----- | 5233813 | UA7HRB | 1 |
| **SCH. 80 SPECIAL RADIUS ELBOW PLAIN END - 90° 24" RADIUS** | | | | | | |
|  | 1" | E07710024 | ----- | 5121018 | UB9DF | 1 |
| | 1 1/4" | E07712524 | ----- | 5119824 | UB9DG | 1 |
| | 1 1/2" | E07715024 | ----- | 5121015 | UB0DH UPC | 1 |
| | 2" | E07720024 | ----- | 5121019 | UB9DJ UPC | 1 |
| | 2 1/2" | E07725024 | ----- | 5121028 | UB9DK UPC | 1 |
| | 3" | E07730024 | ----- | 5121020 | UB9DL | 1 |
| | 4" | E07740024 | ----- | 5121022 | UB9DN | 1 |

# Rigid PVC Conduit Fittings

| Item | Size in Inches | Part Number | Reference Royal | Reference CANTEX | Reference Thomas & Betts - Carlon | Carton Qty |
|---|---|---|---|---|---|---|
| **SCH. 80 SPECIAL RADIUS ELBOW PLAIN END - 90° 36" RADIUS** | | | | | | |
|  | 1" | E07710036 | | 5121080 | UB9FF | 1 |
| | 1 1/4" | E07712536 | | 5121084 | UB9FG | 1 |
| | 1 1/2" | E07715036 | | 5121100 | UB9FH | 1 |
| | 2" | E07720036 | | 5121021 | UB9FJ | 1 |
| | 2 1/2" | E07725036 | | 5121016 | UB9FK | 1 |
| | 3" | E07730036 | | 5121081 | UB9FL | 1 |
| | 4" | E07740036 | | 5121023 | UB9FN | 1 |
| | 5" | E07750036 | | 5121083 | UB9FP | 1 |
| | 6" | E07760036 | | 5121073 | UB9FR | 1 |
| **SCH. 80 SPECIAL RADIUS ELBOW PLAIN END - 90° 48" RADIUS** | | | | | | |
|  | 1" | E07710048 | | 5121065 | UB9HF | 1 |
| | 1 1/4" | E07712548 | | 5136510 | UB9HG | 1 |
| | 1 1/2" | E07715048 | | 5121076 | UB9HH | 1 |
| | 2" | E07720048 | | 5121075 | UB9HJ | 1 |
| | 2 1/2" | E07725048 | | 5121030 | UB9HK | 1 |
| | 3" | E07730048 | | 5121082 | UB9HL | 1 |
| | 4" | E07740048 | | 5121024 | UB9HN | 1 |
| | 5" | E07750048 | | 5121025 | UB9HP | 1 |
| **SCH. 80 SPECIAL RADIUS ELBOW PLAIN END** | | | | | | |
|  | 1" | E07810024 | | 5136500 | UB7DF | 1 |
| | 1 1/4" | E07812524 | | 5136512 | UB7DG | 1 |
| | 1 1/2" | E07815024 | | 5163533 | UB7DH | 1 |
| | 2" | E07820024 | | 5121101 | UB7DJ | 1 |
| | 2 1/2" | E07825024 | | 5121943 | UB7DK | 1 |
| | 3" | E07830024 | | 5121014 | UB7DL | 1 |
| | 4" | E07840024 | | 5121089 | UB7DN | 1 |
| **SCH. 80 SPECIAL RADIUS ELBOW PLAIN END** | | | | | | |
|  | 1" | E07810036 | | 5136502 | | 1 |
| | 1 1/4" | E07812536 | | 5136514 | UB7FG | 1 |
| | 1 1/2" | E07815036 | | 5136533 | UB7FH | 1 |
| | 2" | E07820036 | | 5121098 | UB7FJ | 1 |
| | 2 1/2" | E07825036 | | 5121150 | UB7FK | 1 |
| | 3" | E07830036 | | 5121077 | UB7FL | 1 |
| | 4" | E07840036 | | 5119821 | UB7FN | 1 |
| | 5" | E07850036 | | 5119820 | UB7FP | 1 |
| | 6" | E07860036 | | 5121072 | UB7FR | 1 |

# Rigid PVC Conduit Fittings

| Item | Size in Inches | Part Number | Reference Royal | Reference CANTEX | Reference Thomas & Betts - Carlon | Carton Qty |
|---|---|---|---|---|---|---|
| **SCH. 80 SPECIAL RADIUS ELBOW PLAIN END - 45° 48" RADIUS** | | | | | | |
|  | 1" | E07810048 | ----- | 5136503 | UB7HF | 1 |
| | 1 1/4" | E07812548 | ----- | 5136515 | UB7HG | 1 |
| | 1 1/2" | E07815048 | ----- | 5136534 | ----- | 1 |
| | 2" | E07820048 | ----- | 5121093 | UB7HJ | 1 |
| | 2 1/2" | E07825048 | ----- | 5136563 | ----- | 1 |
| | 3" | E07830048 | ----- | 5121078 | UB7HL | 1 |
| | 4" | E07840048 | ----- | 5121091 | UB7HN | 1 |
| | 5" | E07850048 | ----- | 5121948 | UB7HP | 1 |
| **SCH. 80 SPECIAL RADIUS ELBOW BELLED - 90° 24" RADIUS** | | | | | | |
|  | 1" | E08210024 | ----- | ----- | ----- | 1 |
| | 1 1/4" | E08212524 | ----- | ----- | ----- | 1 |
| | 1 1/2" | E08215024 | ----- | ----- | ----- | 1 |
| | 2" | E08220024 | ----- | ----- | UB9DJB | 1 |
| | 2 1/2" | E08225024 | ----- | ----- | UB9DKB | 1 |
| | 3" | E08230024 | ----- | ----- | UB9DLB | 1 |
| | 4" | E08240024 | ----- | ----- | ----- | 1 |
| **SCH. 80 SPECIAL RADIUS ELBOW BELLED - 90° 36" RADIUS** | | | | | | |
|  | 1" | E08210036 | ----- | ----- | ----- | 1 |
| | 1 1/4" | E08212536 | ----- | ----- | ----- | 1 |
| | 1 1/2" | E08215036 | ----- | ----- | ----- | 1 |
| | 2" | E08220036 | ----- | ----- | ----- | 1 |
| | 2 1/2" | E08225036 | ----- | ----- | UB9FKB | 1 |
| | 3" | E08230036 | ----- | ----- | UB9FLB | 1 |
| | 4" | E08240036 | ----- | ----- | UB9FNB | 1 |
| | 5" | E08250036 | ----- | ----- | ----- | 1 |
| | 6" | E08260036 | ----- | ----- | ----- | 1 |
| **SCH. 80 SPECIAL RADIUS ELBOW BELLED - 90° 48" RADIUS** | | | | | | |
|  | 1" | E08210048 | ----- | ----- | ----- | 1 |
| | 1 1/4" | E08212548 | ----- | ----- | ----- | 1 |
| | 1 1/2" | E08215048 | ----- | ----- | ----- | 1 |
| | 2" | E08220048 | ----- | ----- | ----- | 1 |
| | 2 1/2" | E08225048 | ----- | ----- | ----- | 1 |
| | 3" | E08230048 | ----- | ----- | ----- | 1 |
| | 4" | E08240048 | ----- | ----- | UB9HNB | 1 |
| | 5" | E08250048 | ----- | ----- | ----- | 1 |

# Rigid PVC Conduit Fittings

| Item | Size in Inches | Part Number | Reference Royal | Reference CANTEX | Reference Thomas & Betts - Carlon | Carton Qty |
|---|---|---|---|---|---|---|
| SCH. 80 SPECIAL RADIUS ELBOW BELLED - 45° 24" RADIUS | | | | | | |
|  | 1" | E08310024 | ----- | ----- | ----- | 1 |
| | 1 1/4" | E08312524 | ----- | ----- | ----- | 1 |
| | 1 1/2" | E08315024 | ----- | ----- | ----- | 1 |
| | 2" | E08320024 | ----- | ----- | ----- | 1 |
| | 2 1/2" | E08325024 | ----- | ----- | ----- | 1 |
| | 3" | E08330024 | ----- | ----- | ----- | 1 |
| | 4" | E08340024 | ----- | ----- | ----- | 1 |
| SCH. 80 SPECIAL RADIUS ELBOW BELLED - 45° 36" RADIUS | | | | | | |
|  | 1" | E08310036 | ----- | ----- | ----- | 1 |
| | 1 1/4" | E08312536 | ----- | ----- | ----- | 1 |
| | 1 1/2" | E08315036 | ----- | ----- | ----- | 1 |
| | 2" | E08320036 | ----- | ----- | ----- | 1 |
| | 2 1/2" | E08325036 | ----- | ----- | ----- | 1 |
| | 3" | E08330036 | ----- | ----- | ----- | 1 |
| | 4" | E08340036 | ----- | ----- | ----- | 1 |
| | 5" | E08350036 | ----- | ----- | ----- | 1 |
| | 6" | E08360036 | ----- | ----- | ----- | 1 |
| SCH. 80 SPECIAL RADIUS ELBOW BELLED - 45° 48" RADIUS | | | | | | |
|  | 1" | E08310048 | ----- | ----- | ----- | 1 |
| | 1 1/4" | E08312548 | ----- | ----- | ----- | 1 |
| | 1 1/2" | E08315048 | ----- | ----- | ----- | 1 |
| | 2" | E08320048 | ----- | ----- | ----- | 1 |
| | 2 1/2" | E08325048 | ----- | ----- | ----- | 1 |
| | 3" | E08330048 | ----- | ----- | ----- | 1 |
| | 4" | E08340048 | ----- | ----- | ----- | 1 |
| | 5" | E08350048 | ----- | ----- | ----- | 1 |

# Rigid PVC Conduit Fittings

## With Brass Fasteners

| Item | Size in Inches | Part Number | Reference Royal | Reference CANTEX | Reference Thomas & Betts - Carlon | Carton Qty |
|---|---|---|---|---|---|---|
| **BRASS FASTENER PRODUCTS - ACCESS FITTING - TYPE LB** | | | | | | |
|  | 1/2″ | E533050 | RSLB10S | ----- | ----- | 25 |
| | 3/4″ | E533075 | RSLB20S | ----- | ----- | 25 |
| | 1″ | E533100 | RSLB30S | ----- | ----- | 15 |
| | 1 1/4″ | E533125 | RSLB40S | ----- | ----- | 20 |
| | 1 1/2″ | E533150 | RSLB50S | ----- | ----- | 10 |
| | 2″ | E533200 | RSLB60S | ----- | ----- | 15 |
| | 2 1/2″ | E533250 | RSLB70S | ----- | ----- | 5 |
| | 3″ | E533300 | RSLB80S | ----- | ----- | 5 |
| | 3 1/2″ | E533350 | RSLB90S | ----- | ----- | 5 |
| | 4″ | E533400 | RSLB100S | ----- | ----- | 5 |
| **BRASS FASTENER PRODUCTS - ACCESS FITTING - TYPE C** | | | | | | |
|  | 1/2″ | E532050 | RSC10S | ----- | ----- | 30 |
| | 3/4″ | E532075 | RSC20S | ----- | ----- | 20 |
| | 1″ | E532100 | RSC30S | ----- | ----- | 15 |
| | 1 1/4″ | E532125 | RSC40S | ----- | ----- | 15 |
| | 1 1/2″ | E532150 | RSC50S | ----- | ----- | 10 |
| | 2″ | E532200 | RSC60S | ----- | ----- | 15 |
| | 2 1/2″ | E532250 | RSC70S | ----- | ----- | 4 |
| | 3″ | E532300 | RSC80S | ----- | ----- | 4 |
| | 3 1/2″ | E532350 | RSC90S | ----- | ----- | 4 |
| | 4″ | E532400 | RSC100S | ----- | ----- | 4 |
| **BRASS FASTENER PRODUCTS - ACCESS FITTING - TYPE LL** | | | | | | |
|  | 1/2″ | E534050 | RSLL10S | ----- | ----- | 25 |
| | 3/4″ | E534075 | RSLL20S | ----- | ----- | 20 |
| | 1″ | E534100 | RSLL30S | ----- | ----- | 15 |
| | 1 1/4″ | E534125 | RSLL40S | ----- | ----- | 10 |
| | 1 1/2″ | E534150 | RSLL50S | ----- | ----- | 10 |
| | 2″ | E534200 | RSLL60S | ----- | ----- | 10 |
| | 2 1/2″ | E534250 | RSLL70S | ----- | ----- | 4 |
| | 3″ | E534300 | RSLL80S | ----- | ----- | 4 |
| | 3 1/2″ | E534350 | RSLL90S | ----- | ----- | 5 |
| | 4″ | E534400 | RSLL100S | ----- | ----- | 5 |

# Rigid PVC Conduit Fittings

## With Brass Fasteners

| Item | Size in Inches | Part Number | Reference Royal | Reference CANTEX | Reference Thomas & Betts - Carlon | Carton Qty |
|---|---|---|---|---|---|---|
| **BRASS FASTENER PRODUCTS - ACCESS FITTING - TYPE LR** | | | | | | |
|  | 1/2″ | E535050 | RSLR10S | ----- | ----- | 25 |
| | 3/4″ | E535075 | RSLR20S | ----- | ----- | 20 |
| | 1″ | E535100 | RSLR30S | ----- | ----- | 15 |
| | 1 1/4″ | E535125 | RSLR40S | ----- | ----- | 10 |
| | 1 1/2″ | E535150 | RSLR50S | ----- | ----- | 10 |
| | 2″ | E535200 | RSLR60S | ----- | ----- | 10 |
| | 2 1/2″ | E535250 | RSLR70S | ----- | ----- | 4 |
| | 3″ | E535300 | RSLR80S | ----- | ----- | 4 |
| | 3 1/2″ | E535350 | RSLR90S | ----- | ----- | 5 |
| | 4″ | E535400 | RSLR100S | ----- | ----- | 5 |
| **BRASS FASTENER PRODUCTS - ACCESS FITTING - TYPE E** | | | | | | |
|  | 1/2″ | E536050 | RSE10S | ----- | ----- | 30 |
| | 3/4″ | E536075 | RSE20S | ----- | ----- | 20 |
| | 1″ | E536100 | RSE30S | ----- | ----- | 15 |
| | 1 1/4″ | E536125 | RSE40S | ----- | ----- | 20 |
| | 1 1/2″ | E536150 | RSE50S | ----- | ----- | 10 |
| | 2″ | E536200 | RSE60S | ----- | ----- | 15 |
| | 2 1/2″ | E536250 | RSE70S | ----- | ----- | 4 |
| | 3″ | E536300 | RSE80S | ----- | ----- | 4 |
| | 3 1/2″ | E536350 | RSE90S | ----- | ----- | 4 |
| | 4″ | E536400 | RSE100S | ----- | ----- | 4 |
| **BRASS FASTENER PRODUCTS - ACCESS FITTING - TYPE T** | | | | | | |
|  | 1/2″ | E537050 | RST10S | ----- | ----- | 30 |
| | 3/4″ | E537075 | RST20S | ----- | ----- | 20 |
| | 1″ | E537100 | RST30S | ----- | ----- | 25 |
| | 1 1/4″ | E537125 | RST40S | ----- | ----- | 15 |
| | 1 1/2″ | E537150 | RST50S | ----- | ----- | 10 |
| | 2″ | E537200 | RST60S | ----- | ----- | 10 |
| | 2 1/2″ | E537250 | RST70S | ----- | ----- | 4 |
| | 3″ | E537300 | RST80S | ----- | ----- | 4 |
| | 3 1/2″ | E537350 | RST90S | ----- | ----- | 4 |
| | 4″ | E537400 | RST100S | ----- | ----- | 4 |
| **BRASS FASTENER PRODUCTS - ACCESS FITTING - TYPE TB** | | | | | | |
|  | 1/2″ | E569050 | RSTB10S | ----- | ----- | 30 |
| | 3/4″ | E569075 | RSTB20S | ----- | ----- | 20 |
| | 1″ | E569100 | RSTB30S | ----- | ----- | 10 |
| | 1 1/4″ | E569125 | RSTB40S | ----- | ----- | 10 |

# Rigid PVC Conduit Fittings

## With Brass Fasteners

| Item | Size in Inches | Part Number | Reference Royal | Reference CANTEX | Reference Thomas & Betts - Carlon | Carton Qty |
|---|---|---|---|---|---|---|
| **BRASS FASTENER PRODUCTS - JUNCTION BOX WITH GASKET** | | | | | | |
| 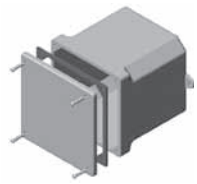 | 4" X 4" X 2" | E551442 | RJB442 | ------ | ------ | 15 |
| | 4" X 4" X 4" | E551444 | RJB444 | ------ | ------ | 10 |
| | 4" X 4" X 6" | E551446 | RJB446 | ------ | ------ | 8 |
| | 5" X 5" X 2" | E551552 | RJB552 | ------ | ------ | 12 |
| | 6" X 6" X 4" | E551664 | RJB664 | ------ | ------ | 15 |
| | 6" X 6" X 6" | E551666 | RJB666 | ------ | ------ | 4 |
| | 8" X 8" X 4" | E551884 | RJB884 | ------ | ------ | 4 |
| | 8" X 8" X 7" | E551887 | RJB887 | ------ | ------ | 4 |
| | 12" X 12" X 4" | E55112124 | RJB12124 | ------ | ------ | 2 |
| | 12" X 12" X 6" | E55112126 | RJB12126 | ------ | ------ | 4 |
| | 12" X 12" X 8" | E55112128 | RJB12128 | ------ | ------ | 3 |
| **BRASS FASTENER PRODUCTS - SINGLE GANG BOX - F SERIES** | | | | | | |
| 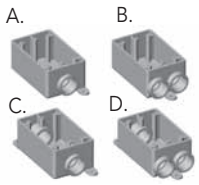  | A. 1/2" FS | E542001 | RFS10 | ------ | ------ | 10 |
| | A. 3/4" FS | E542002 | RFS15 | ------ | ------ | 10 |
| | B. 1/2" FSS | E542003 | RFSS10 | ------ | ------ | 10 |
| | B. 3/4" FSS | E542004 | RFSS15 | ------ | ------ | 10 |
| | C. 1/2" FSC | E542005 | RFSC10 | ------ | ------ | 10 |
| | C. 3/4" FSC | E542006 | RFSC15 | ------ | ------ | 10 |
| | D. 1/2" FSCC | E542007 | RFSCC10 | ------ | ------ | 10 |
| | D. 3/4" FSCC | E542008 | RFSCC15 | ------ | ------ | 10 |
| **BRASS FASTENER PRODUCTS - SINGLE GANG DEEP BOX - FD SERIES** | | | | | | |
| 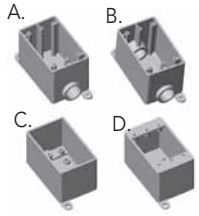  | A. 1/2" FDS | E543001 | RFDS10 | ------ | ------ | 10 |
| | A. 3/4" FDS | E543002 | RFDS15 | ------ | ------ | 10 |
| | A. 1" FDS | E543003 | RFDS20 | ------ | ------ | 10 |
| | B. 1/2" FDC | E543004 | RFDC10 | ------ | ------ | 10 |
| | B. 3/4" FDC | E543005 | RFDC15 | ------ | ------ | 10 |
| | B. 1" FDC | E543006 | RFDC20 | ------ | ------ | 10 |
| | C. BLANK | E543007 | RFD | ------ | ------ | 10 |
| **BRASS FASTENER PRODUCTS - DOUBLE GANG BOX - F SERIES** | | | | | | |
| 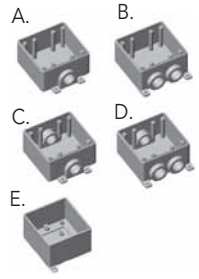  | A. 1/2" FS | E541001 | ------ | ------ | ------ | 10 |
| | A. 3/4" FS | E541002 | ------ | ------ | ------ | 10 |
| | A. 1" FS | E541003 | ------ | ------ | ------ | 10 |
| | B. 1/2" FSS | E541004 | ------ | ------ | ------ | 10 |
| | B. 3/4" FSS | E541005 | ------ | ------ | ------ | 10 |
| | B. 1" FSS | E541006 | ------ | ------ | ------ | 10 |
| | C. 1/2" FSC | E541007 | ------ | ------ | ------ | 10 |
| | C. 3/4" FSC | E541008 | ------ | ------ | ------ | 10 |
| | C. 1" FSC | E541009 | ------ | ------ | ------ | 10 |
| | D. 1/2" FSCC | E541011 | ------ | ------ | ------ | 10 |
| | D. 3/4" FSCC | E541012 | ------ | ------ | ------ | 10 |
| | D. 1" FSCC | E541013 | ------ | ------ | ------ | 10 |
| | E. BLANK | E541010 | ------ | ------ | ------ | 10 |

# Rigid PVC Conduit Fittings

## With Brass Fasteners

| Item | Size in Inches | Part Number | Reference Royal | Reference CANTEX | Reference Thomas & Betts - Carlon | Carton Qty |
|---|---|---|---|---|---|---|
| **BRASS FASTENER PRODUCTS - SINGLE GANG COVER PLATE - F SERIES** | | | | | | |
| 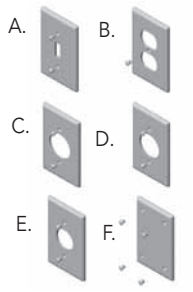 | A. TOGGLE | E546002 | RTSC15/10 | ------ | ------ | 100 |
| | B. DUPLEX | E546001 | RDRC15/10 | ------ | ------ | 100 |
| | C. 15 AMP | E546004 | R20RC15/10 | ------ | ------ | 100 |
| | D. 20 AMP | E546003 | R20 3RC15/10 | ------ | ------ | 100 |
| | E. 30 AMP | E546005 | R30 3RC15/10 | ------ | ------ | 100 |
| | F. BLANK W/ GASKET | E546006 | RBRC15/10 | ------ | ------ | 100 |
| **BRASS FASTENER PRODUCTS - DOUBLE GANG WEATHERPROOF COVER PLATE** | | | | | | |
| 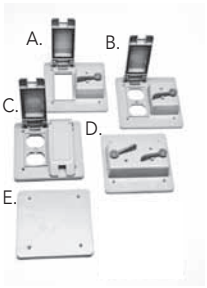 | B. GFI & TOGGLE | E549005 | ------ | ------ | ------ | 10 |
| | C. DUPLEX & TOGGLE | E549006 | ------ | ------ | ------ | 10 |
| | D. DOUBLE DU PLEX | E549007 | ------ | ------ | ------ | 10 |
| | E. TOGGLE | E549008 | ------ | ------ | ------ | 10 |
| | F. BLANK | E549009 | ------ | ------ | ------ | 25 |
| **BRASS FASTENER PRODUCTS - SINGLE GANG WEATHERPROOF COVER PLATE** | | | | | | |
| 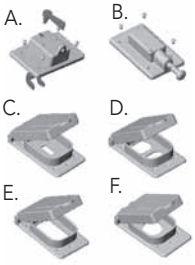 | A. TOGGLE S/ COVER | E547002 | RVSC15/10 | ------ | ------ | 20 |
| | B. PLUNGER S/ COVER | E547008 | RVPT15/10 | ------ | ------ | 20 |
| | C. TOGGLE | E547009 | RWTG15/10 | ------ | ------ | 20 |
| | D. DUPLEX | E547001 | RWDR15/10 | ------ | ------ | 20 |
| | D. DUPLEX WHITE | E547010 | RWDR15/10W | ------ | ------ | 20 |
| | E. GROUND FAULT | E547007 | RWGF15/10 | ------ | ------ | 20 |
| | E. GROUND FAULT WHITE | E547011 | RWGF15/10W | ------ | ------ | 20 |
| | F. 15 AMP | E547003 | RWTL15 | ------ | ------ | 20 |
| | F. 20 AMP | E547004 | RWTL20 | ------ | ------ | 20 |
| | F. 30 AMP | E547005 | RWTL30 | ------ | ------ | 20 |
| | F. 50 AMP | E547006 | RWTL50 | ------ | ------ | 20 |

# ENT - Tubing

## Electrical Non-Metallic Tubing

| Item | Size in Inches | Part Number | Reference Royal | Reference CANTEX | Reference Thomas & Betts - Carlon | Carton Qty |
|---|---|---|---|---|---|---|
| **COILS - BLUE ENT TUBING** | | | | | | |
|  | | | | | | FEET |
| | 1/2 | EC005200BL | ----- | A51AEB1 | 12005 200 | 200 |
| | 3/4 | EC007100BL | ----- | A51AGA1 | 12007 100 | 100 |
| | 1 | EC010100BL | ----- | A51BAA1 | 12008 100 | 100 |
| | 1 1/4 | EC012350BL | ----- | ----- | ----- | 350 |
| | 1 1/2 | EC015300BL | ----- | ----- | ----- | 300 |
| | 2 | EC020250BL | ----- | ----- | ----- | 250 |
| **COILS - GREY ENT TUBING** | | | | | | |
|  | | | | | | FEET |
| | 1/2 | EC005370 | EC005370 | ----- | ----- | 370 |
| | 3/4 | EC007240 | EC007240 | ----- | ----- | 240 |
| | 1 | EC010160 | EC010160 | ----- | ----- | 160 |
| | 1 1/4 | EC012500 | EC012500 | ----- | ----- | 500 |
| | 1 1/2 | EC015300 | EC015300 | ----- | ----- | 300 |
| | 2 | EC020225 | EC020225 | ----- | ----- | 225 |
| **REELS - BLUE ENT TUBING** | | | | | | |
|  | | | | | | FEET |
| | 1/2 | ER 0051500BL | ----- | A51AEQ1 | 12005AK 001 | 1,500 |
| | 3/4 | ER 0071000BL | ----- | A51AGJ1 | 12007AA 001 | 1,000 |
| | 1 | ER 0101000BL | ----- | A51BAJ1 | ----- | 1,000 |
| | 1 1/4 | ER 0121000BL | ----- | ----- | ----- | 1,000 |
| | 1 1/2 | ER015750BL | ----- | ----- | 12010 750 | 750 |
| | 2 | ER020500BL | ----- | ----- | 12011 500 | 500 |

# ENT - Tubing

## Electrical Non-Metallic Tubing

| Item | Size in Inches | Part Number | Reference Royal | Reference CANTEX | Reference Thomas & Betts - Carlon | Carton Qty |
|---|---|---|---|---|---|---|
| **REELS - GREY ENT TUBING** | | | | | | |
|  | | | | | | FEET |
| | 1/2 | ER0052000 | ER0052000 | ----- | ----- | 2,000 |
| | 3/4 | ER0071500 | ER0071500 | ----- | ----- | 1,500 |
| | 1 | ER0101000 | ER0101000 | ----- | ----- | 1,000 |
| | 1 1/4 | ER0121000 | ER0121000 | ----- | ----- | 1,000 |
| | 1 1/2 | ER015750 | ER015750 | ----- | ----- | 750 |
| | 2 | ER020500 | ER020500 | ----- | ----- | 500 |
| **STRAIGHT LENGTH - BLUE ENT TUBING** | | | | | | |
|  | | | | | | EACH |
| | 1/2 | ES00510BL | ----- | ----- | ----- | 100 |
| | 3/4 | ES00710BL | ----- | ----- | ----- | 100 |
| | 1 | ES01010BL | ----- | ----- | ----- | 100 |
| **STRAIGHT LENGTH - GREY ENT TUBING** | | | | | | |
|  | | | | | SUPPLIED IN 10 FOOT LENGTHS | |
| | | | | | | EACH |
| | 1/2 | ES00510 | ES00510 | ----- | ----- | 100 |
| | 3/4 | ES00710 | ES00710 | ----- | ----- | 100 |
| | 1 | ES01010 | ES01010 | ----- | ----- | 100 |

# ENT - Fittings

## Electrical Non-Metallic Fittings

| Item | Size in Inches | Part Number | Reference Royal | Reference CANTEX | Reference Thomas & Betts - Carlon | Carton Qty |
|---|---|---|---|---|---|---|
| **ENT COUPLING** | | | | | | |
|  | 1/2 | RKC10 | RKC10 | 5163380 | A240D | 150 |
| | 3/4 | RKC15 | RKC15 | 5163381 | A240E | 100 |
| | 1 | RKC20 | RKC20 | 5163382 | A240F | 50 |
| | 1 1/4 | RKC25 | RKC25 | ----- | ----- | 50 |
| | 1 1/2 | RKC30 | RKC30 | ----- | ----- | 40 |
| | 2 | RKC35 | RKC35 | ----- | ----- | 25 |
| **ENT THREADED TERMINAL ADAPTER WITH LOCK NUT** | | | | | | |
|  | 1/2 | RKTA10 | RKTA10 | 5163415 | ----- | 150 |
| | 3/4 | RKTA15 | RKTA15 | 5163416 | ----- | 100 |
| | 1 | RKTA20 | RKTA20 | 5163417 | ----- | 50 |
| | 1 1/4 | RKTA25 | RKTA25 | ----- | ----- | 50 |
| | 1 1/2 | RKTA30 | RKTA30 | ----- | ----- | 50 |
| | 2 | RKTA35 | RKTA35 | ----- | ----- | 25 |
| **ENT ADAPTER WITH SET SCREW** | | | | | | |
|  | 1/2 | RKTC10 | RKTC10 | ----- | A245D | 125 |
| | 3/4 | RKTC15 | RKTC15 | ----- | A245E | 100 |
| | 1 | RKTC20 | RKTC20 | ----- | A245F | 50 |
| | 1 1/4 | RKTC25 | RKTC25 | ----- | ----- | 50 |
| | 1 1/2 | RKTC30 | RKTC30 | ----- | ----- | 40 |
| | 2 | RKTC35 | RKTC35 | ----- | ----- | 15 |
| **ENT QUICK SNAP TERMINAL ADAPTER** | | | | | | |
|  | 1/2 | RKTS10 | RKTS10 | 5163405 | A253D | 150 |
| | 3/4 | RKTS15 | RKTS15 | 5163406 | A253E | 100 |
| | 1 | RKTS20 | RKTS20 | 5163407 | A253F | 50 |
| **ENT CLIP RING** | | | | | | |
|  | 1/2 | RKR10 | RKR10 | ----- | ----- | 200† |
| | 3/4 | RKR15 | RKR15 | ----- | ----- | 200† |
| | 1 | RKR20 | RKR20 | ----- | ----- | 200† |
| | 1 1/4 | RKR25 | RKR25 | ----- | ----- | 100* |
| | 1 1/2 | RKR30 | RKR30 | ----- | ----- | 100* |
| | 2 | RKR35 | RKR35 | ----- | ----- | 50^ |

Rings are net priced per bag as follows: † = 20/bag * = 10/bag ^ = 5/bag

# ENT - Fittings

## Electrical Non-Metallic Fittings

| Item | Size in Inches | Part Number | Reference Royal | Reference CANTEX | Reference Thomas & Betts - Carlon | Carton Qty |
|---|---|---|---|---|---|---|
| **HEAVY DUTY LOCK NUT** | | | | | | |
|  | 1/2 | RLN10 | RLN10 | ----- | ----- | 200 |
| | 3/4 | RLN15 | RLN15 | ----- | ----- | 200 |
| | 1 | RLN20 | RLN20 | ----- | ----- | 200 |
| | 1 1/4 | RLN25 | RLN25 | ----- | ----- | 200 |
| | 1 1/2 | RLN30 | RLN30 | ----- | ----- | 200 |
| | 2 | RLN35 | RLN35 | ----- | ----- | 200 |
| **STRAIGHT STUBBY (POLYETHYLENE)** | | | | | | |
|  | 1/2 | RECM10 | RECM10 | EN050SBY | A210D | 150 |
| | 3/4 | RECM15 | RECM15 | EN075SBY | A210E | 150 |
| | 1 | RECM20 | RECM20 | EN100SBY | A210F | 200 |
| | 1 1/4 | RECM25 | RECM25 | ----- | ----- | 200 |
| **45 DEGREE ANGLED FORM STUBBY (POLYETHYLENE)** | | | | | | |
|  | 1/2 | RKASTB10 | RKASTB10 | ----- | A220D | 50 |
| | 3/4 | RKASTB15 | RKASTB15 | ----- | A220E | 50 |
| | 1 | RKASTB20 | RKASTB20 | ----- | A220F | 50 |
| | 1 1/4 | RKASTB25 | RKASTB25 | ----- | A220G | 50 |
| | 1 1/2 | RKASTB30 | RKASTB30 | ----- | A220H | 50 |
| | 2 | RKASTB35 | RKASTB35 | ----- | A220J | 50 |
| **TAPERED PLUG (POLYETHYLENE)** | | | | | | |
|  | 1/2 | RTP10 | RTP10 | ----- | ----- | 250 |
| | 3/4 | RTP15 | RTP15 | ----- | ----- | 100 |
| | 1 | RTP20 | RTP20 | ----- | ----- | 100 |
| **SLAB BOX EXTENSION** | | | | | | |
|  | 1" EXTENSION | RSMBXTENSION | RSMBXTENSION | ----- | ----- | 20 |

# ENT - Fittings

## Electrical Non-Metallic Fittings

| Item | Size in Inches | Part Number | Reference Royal | Reference CANTEX | Reference Thomas & Betts - Carlon | Carton Qty |
|---|---|---|---|---|---|---|
| **ENT SLAB BOX WITH HUB EXTENSIONS AND GREY LID** | | | | | | |
|  | 1/2 (8) | RSMB H 10 | RSMB H 10 | ENS0500C | ------ | 25 |
| | 1/2 (4) 3/4 (4) | RSMB H 10 15 | RSMB H 10 15 | ENS0507C | ------ | 25 |
| | 1/2 (4) 3/4 (2) | RSMB H 10 15 20 | RSMB H 10 15 20 | ------ | ------ | 25 |
| | 1 (2) | | | ------ | ------ | |
| | 1/2 (4) 1 (4) | RSMB H 10 20 | RSMB H 10 20 | ------ | ------ | 25 |
| | 3/4 (8) | RSMB H 15 | RSMB H 15 | ------ | ------ | 25 |
| | 3/4 (4) 1 (4) | RSMB H 15 20 | RSMB H 15 20 | ------ | ------ | 25 |
| **ENT SLAB BOX WITH KNOCKOUTS AND GREY LID** | | | | | | |
|  | 1/2 (8) | RSMB 10 | RSMB 10 | ENS0500K | ------ | 25 |
| | 1/2 (4) 3/4 (4) | RSMB 10 15 | RSMB 10 15 | ENS0507K | ------ | 25 |
| | 1/2 (4) 3/4 (2) | RSMB 10 15 20 | RSMB 10 15 20 | ------ | ------ | 25 |
| | 1 (2) | | | ------ | ------ | |
| | 1/2 (2) 3/4 (4) | RSMB 15 20 10 | RSMB 15 20 10 | ------ | ------ | 25 |
| | 1 (2) | | | ------ | ------ | |
| | 3/4 (8) | RSMB 15 | RSMB 15 | ------ | ------ | 25 |
| **ENT SHALLOW SLAB BOX** | | | | | | |
|  | 1/2 (8) | RSMBS H 10 | RSMBS H 10 | ------ | ------ | 25 |
| | 1/2 (4) 3/4 (4) | RSMBS H 10 15 | RSMBS H 10 15 | ------ | ------ | 25 |
| | 1/2 (4) 3/4 (2) | RSMBS H 10 15 20 | RSMBS H 10 15 20 | ------ | ------ | 25 |
| | 1 (2) | | | ------ | ------ | |
| | 1/2 (4) 1 (4) | RSMBS H 10 20 | RSMBS H 10 20 | ------ | ------ | 25 |
| | 3/4 (8) | RSMBS H 15 | RSMBS H 15 | ------ | ------ | 25 |
| | 3/4 (4) 1 (4) | RSMBS H 15 20 | RSMBS H 15 20 | ------ | ------ | 25 |
| **ENT ISOLATOR MODULE SLAB BOX** | | | | | | |
|  | 1/2 (8) | RSMB 10 IMB | RSMB 10 IMB | ------ | ------ | 20 |
| | 1/2 (4) 3/4 (4) | RSMB 10 15 IMB | RSMB 10 15 IMB | ------ | ------ | 20 |
| | 1/2 (4) 3/4 (2) | RSMB 10 15 20 IMB | RSMB 10 15 20 IMB | ------ | ------ | 20 |
| | 1 (2) | | | ------ | ------ | |
| | 1/2 (4) 1 (4) | RSMB 10 20 IMB | RSMB 10 20 IMB | ------ | ------ | 20 |
| | 3/4 (8) | RSMB 15 IMB | RSMB 15 IMB | ------ | ------ | 20 |
| | 3/4 (4) 1 (4) | RSMB 15 20 IMB | RSMB 15 20 IMB | ------ | ------ | 20 |

# ENT - Fittings

## Electrical Non-Metallic Fittings

| Item | Size in Inches | Part Number | Reference Royal | Reference CANTEX | Reference Thomas & Betts - Carlon | Carton Qty |
|---|---|---|---|---|---|---|
| **ENT SHALLOW SINGLE GANG CONCRETE WALL BOX** | | | | | | |
|  | 1/2 | RSVSB H 10 | RSVSB H 10 | ------ | ------ | 70 |
| | 3/4 | RSVSB H 15 | RSVSB H 15 | ------ | ------ | 70 |
| | 1 | RSVSB H 20 | RSVSB H 20 | ------ | ------ | 70 |
| **ENT DEEP SINGLE GANG CONCRETE WALL BOX** | | | | | | |
|  | 1/2 (8) | RSVDB H 10 | RSVDB H 10 | ------ | ------ | 25 |
| | 1/2 (4) 3/4 (4) | RSVDB H 10 15 | RSVDB H 10 15 | ------ | ------ | 25 |
| | 1/2 (4) 3/4 (2) | RSVDB H 10 15 20 | RSVDB H 10 15 20 | ------ | ------ | 25 |
| | 1 (2) | | | | | |
| | 1/2 (4) 1 (4) | RSVDB H 10 20 | RSVDB H 10 20 | ------ | ------ | 25 |
| | 3/4 (8) | RSVDB H 15 | RSVDB H 15 | ------ | ------ | 25 |

# PVC Enclosures

## Electrical Non-Metallic PVC Enclosures

| Item | Size in Inches | Part Number | Reference Royal | Reference CANTEX | Reference Thomas & Betts - Carlon | Weight Each Lbs. |
|---|---|---|---|---|---|---|
| ELECTRICAL TROUGH BOX (SCREW COVER) | | | | | | |
|  | 4 X 4 X 12 | ETR040412 | ETR040412 | ----- | ----- | 3 |
| | 4 X 4 X 18 | ETR040418 | ETR040418 | ----- | ----- | 4 |
| | 4 X 4 X 24 | ETR040424 | ETR040424 | ----- | ----- | 5 |
| | 4 X 4 X 36 | ETR040436 | ETR040436 | ----- | ----- | 8 |
| | 4 X 4 X 48 | ETR040448 | ETR040448 | ----- | ----- | 10 |
| | 4 X 4 X 60 | ETR040460 | ETR040460 | ----- | ----- | 12 |
| | 6 X 6 X 12 | ETR060612 | ETR060612 | ----- | ----- | 5 |
| | 6 X 6 X 18 | ETR060618 | ETR060618 | ----- | ----- | 7 |
| | 6 X 6 X 24 | ETR060624 | ETR060624 | ----- | ----- | 8 |
| | 6 X 6 X 36 | ETR060636 | ETR060636 | ----- | ----- | 11 |
| | 6 X 6 X 48 | ETR060648 | ETR060648 | ----- | ----- | 14 |
| | 6 X 6 X 60 | ETR060660 | ETR060660 | ----- | ----- | 17 |
| | 8 X 8 X 12 | ETR080812 | ETR080812 | ----- | ----- | 7 |
| | 8 X 8 X 18 | ETR080818 | ETR080818 | ----- | ----- | 9 |
| | 8 X 8 X 24 | ETR080824 | ETR080824 | ----- | ----- | 11 |
| | 8 X 8 X 36 | ETR080836 | ETR080836 | ----- | ----- | 15 |
| | 8 X 8 X 48 | ETR080848 | ETR080848 | ----- | ----- | 19 |
| | 8 X 8 X 60 | ETR080860 | ETR080860 | ----- | ----- | 23 |
| | 12 X 12 X 24 | ETR121224 | ETR121224 | ----- | ----- | 27 |
| | 12 X 12 X 36 | ETR121236 | ETR121236 | ----- | ----- | 33 |
| | 12 X 12 X 48 | ETR121248 | ETR121248 | ----- | ----- | 39 |
| | 12 X 12 X 60 | ETR121260 | ETR121260 | ----- | ----- | 45 |
| ELECTRICAL TROUGH BOX (LATCH COVER) | | | | | | |
| | 4 X 4 X 12 | ELC040412 | ELC040412 | ----- | ----- | 3 |
| | 4 X 4 X 18 | ELC040418 | ELC040418 | ----- | ----- | 4 |
| | 4 X 4 X 24 | ELC040424 | ELC040424 | ----- | ----- | 5 |
| | 4 X 4 X 36 | ELC040436 | ELC040436 | ----- | ----- | 8 |
| | 4 X 4 X 48 | ELC040448 | ELC040448 | ----- | ----- | 10 |
| | 4 X 4 X 60 | ELC040460 | ELC040460 | ----- | ----- | 12 |
| | 6 X 6 X 12 | ELC060612 | ELC060612 | ----- | ----- | 5 |
| | 6 X 6 X 18 | ELC060618 | ELC060618 | ----- | ----- | 7 |
| | 6 X 6 X 24 | ELC060624 | ELC060624 | ----- | ----- | 8 |
| | 6 X 6 X 36 | ELC060636 | ELC060636 | ----- | ----- | 11 |
| | 6 X 6 X 48 | ELC060648 | ELC060648 | ----- | ----- | 14 |
| | 6 X 6 X 60 | ELC060660 | ELC060660 | ----- | ----- | 17 |
| | 8 X 8 X 12 | ELC080812 | ELC080812 | ----- | ----- | 7 |
| | 8 X 8 X 18 | ELC080818 | ELC080818 | ----- | ----- | 9 |
| | 8 X 8 X 24 | ELC080824 | ELC080824 | ----- | ----- | 11 |
| | 8 X 8 X 36 | ELC080836 | ELC080836 | ----- | ----- | 15 |
| | 8 X 8 X 48 | ELC080848 | ELC080848 | ----- | ----- | 19 |
| | 8 X 8 X 60 | ELC080860 | ELC080860 | ----- | ----- | 23 |
| | 12 X 12 X 24 | ELC121224 | ELC121224 | ----- | ----- | 27 |
| | 12 X 12 X 36 | ELC121236 | ELC121236 | ----- | ----- | 33 |
| | 12 X 12 X 48 | ELC121248 | ELC121248 | ----- | ----- | 39 |

# PVC Enclosures

## Electrical Non-Metallic PVC Enclosures





| Item | Size in Inches | Part Number | Reference Royal | Reference CANTEX | Reference Thomas & Betts - Carlon | Weight Each Lbs. |
|---|---|---|---|---|---|---|
| LARGE FABRICATED JUNCTION BOXES | | | | | | |
| | 12 X 10 X 6 | E053121006 | E053121006 | ----- | ----- | 8 |
| | 12 X 10 X 8 | E053121008 | E053121008 | ----- | ----- | 9 |
| | 12 X 12 X 4 | E053121204 | E053121204 | ----- | ----- | 7 |
| | 12 X 12 X 6 | E053121206 | E053121206 | ----- | ----- | 9 |
| | 12 X 12 X 8 | E053121208 | E053121208 | ----- | ----- | 10 |
| | 12 X 12 X 12 | E053121212 | E053121212 | ----- | ----- | 14 |
| | 14 X 12 X 4 | E053141204 | E053141204 | ----- | ----- | 9 |
| | 14 X 12 X 6 | E053141206 | E053141206 | ----- | ----- | 10 |
| | 14 X 12 X 8 | E053141208 | E053141208 | ----- | ----- | 12 |
| | 14 X 14 X 4 | E053141404 | E053141404 | ----- | ----- | 10 |
| | 14 X 14 X 6 | E053141406 | E053141406 | ----- | ----- | 12 |
| | 14 X 14 X 8 | E053141408 | E053141408 | ----- | ----- | 14 |
| | 14 X 14 X 10 | E053141410 | E053141410 | ----- | ----- | 16 |
| | 14 X 14 X 14 | E053141414 | E053141414 | ----- | ----- | 19 |
| | 16 X 16 X 10 | E053161610 | E053161610 | ----- | ----- | 21 |
| | 16 X 16 X 12 | E053161612 | E053161612 | ----- | ----- | 23 |
| | 16 X 16 X 16 | E053161616 | E053161616 | ----- | ----- | 22 |
| | 18 X 12 X 4 | E053181204 | E053181204 | ----- | ----- | 10 |
| | 18 X 12 X 6 | E053181206 | E053181206 | ----- | ----- | 12 |
| | 18 X 12 X 8 | E053181208 | E053181208 | ----- | ----- | 13 |
| | 18 X 16 X 4 | E053181604 | E053181604 | ----- | ----- | 12 |
| | 18 X 16 X 6 | E053181606 | E053181606 | ----- | ----- | 14 |
| | 18 X 16 X 8 | E053181608 | E053181608 | ----- | ----- | 16 |
| | 18 X 18 X 6 | E053181806 | E053181806 | ----- | ----- | 16 |
| | 18 X 18 X 8 | E053181808 | E053181808 | ----- | ----- | 18 |
| | 18 X 18 X 10 | E053181810 | E053181810 | ----- | ----- | 20 |
| | 18 X 18 X 12 | E053181812 | E053181812 | ----- | ----- | 22 |
| | 18 X 18 X 18 | E053181818 | E053181818 | ----- | ----- | 26 |
| | 20 X 18 X 8 | E053201808 | E053201808 | ----- | ----- | 20 |
| | 20 X 20 X 8 | E053202008 | E053202008 | ----- | ----- | 22 |
| | 24 X 18 X 6 | E053241806 | E053241806 | ----- | ----- | 20 |
| | 24 X 18 X 8 | E053241808 | E053241808 | ----- | ----- | 22 |
| | 24 X 18 X 12 | E053241812 | E053241812 | ----- | ----- | 25 |
| | 24 X 20 X 8 | E053242008 | E053242008 | ----- | ----- | 25 |
| | 24 X 24 X 6 | E053242406 | E053242406 | ----- | ----- | 25 |
| | 24 X 24 X 8 | E053242408 | E053242408 | ----- | ----- | 28 |
| | 24 X 24 X 10 | E053242410 | E053242410 | ----- | ----- | 33 |
| | 24 X 24 X 12 | E053242412 | E053242412 | ----- | ----- | 35 |
| | 24 X 24 X 24 | E053242424 | E053242424 | ----- | ----- | 40 |
| | 30 X 24 X 8 | E053302408 | E053302408 | ----- | ----- | 34 |
| | 30 X 30 X 10 | E053303010 | E053303010 | ----- | ----- | 39 |
| | 30 X 30 X 20 | E053303020 | E053303020 | ----- | ----- | 48 |
| | 30 X 30 X 30 | E053303030 | E053303030 | ----- | ----- | 60 |
| | 36 X 24 X 8 | E053362408 | E053362408 | ----- | ----- | 39 |
| | 36 X 36 X 12 | E053363612 | E053363612 | ----- | ----- | 61 |
| | 36 X 36 X 18 | E053363618 | E053363618 | ----- | ----- | 65 |
| | 36 X 36 X 20 | E053363620 | E053363620 | ----- | ----- | 67 |
| | 36 X 36 X 36 | E053363636 | E053363636 | ----- | ----- | 70 |
| | 40 X 40 X 12 | E053404012 | E053404012 | ----- | ----- | 78 |
| | 40 X 40 X 20 | E053404020 | E053404020 | ----- | ----- | 88 |

# PVC Enclosures

## Electrical Non-Metallic PVC Enclosures

| Item | Size in Inches | Part Number | Reference Royal | Reference CANTEX | Reference Thomas & Betts - Carlon | Weight Each Lbs. |
|---|---|---|---|---|---|---|
| ELECTRICAL ENCLOSURES | | | | | | |
|  | 20 X 12 X 8 | EBH201208 | EBH201208 | ----- | ----- | 14 |
| | 20 X 16 X 6 | EBH201606 | EBH201606 | ----- | ----- | 16 |
| | 20 X 16 X 8 | EBH201608 | EBH201608 | ----- | ----- | 17 |
| | 20 X 16 X 10 | EBH201610 | EBH201610 | ----- | ----- | 20 |
| | 20 X 16 X 12 | EBH201612 | EBH201612 | ----- | ----- | 22 |
| | 20 X 20 X 6 | EBH202006 | EBH202006 | ----- | ----- | 18 |
| | 20 X 20 X 8 | EBH202008 | EBH202008 | ----- | ----- | 21 |
| | 20 X 20 X 10 | EBH2022010 | EBH2022010 | ----- | ----- | 23 |
| | 20 X 24 X 6 | EBH2022406 | EBH2022406 | ----- | ----- | 21 |
| | 20 X 24 X 8 | EBH202408 | EBH202408 | ----- | ----- | 24 |
| | 24 X 12 X 6 | EBH241206 | EBH241206 | ----- | ----- | 15 |
| | 24 X 12 X 8 | EBH241208 | EBH241208 | ----- | ----- | 17 |
| | 24 X 12 X 10 | EBH241210 | EBH241210 | ----- | ----- | 19 |
| | 24 X 16 X 6 | EBH241606 | EBH241606 | ----- | ----- | 18 |
| | 24 X 16 X 8 | EBH241608 | EBH241608 | ----- | ----- | 20 |
| | 24 X 20 X 8 | EBH242008 | EBH242008 | ----- | ----- | 24 |
| | 24 X 20 X 10 | EBH242010 | EBH242010 | ----- | ----- | 26 |
| | 24 X 20 X 12 | EBH242012 | EBH242012 | ----- | ----- | 29 |
| | 24 X 20 X 16 | EBH242016 | EBH242016 | ----- | ----- | 34 |
| | 24 X 24 X 6 | EBH242406 | EBH242406 | ----- | ----- | 25 |
| | 24 X 24 X 8 | EBH242408 | EBH242408 | ----- | ----- | 28 |
| | 24 X 24 X 10 | EBH242410 | EBH242410 | ----- | ----- | 30 |
| | 24 X 24 X 12 | EBH242412 | EBH242412 | ----- | ----- | 33 |
| | 24 X 24 X 16 | EBH242416 | EBH242416 | ----- | ----- | 38 |
| | 24 X 30 X 8 | EBH243008 | EBH243008 | ----- | ----- | 33 |
| | 30 X 16 X 6 | EBH301606 | EBH301606 | ----- | ----- | 22 |
| | 30 X 20 X 6 | EBH302006 | EBH302006 | ----- | ----- | 26 |
| | 30 X 20 X 8 | EBH302008 | EBH302008 | ----- | ----- | 29 |
| | 30 X 20 X 10 | EBH302010 | EBH302010 | ----- | ----- | 32 |
| | 30 X 24 X 6 | EBH302406 | EBH302406 | ----- | ----- | 30 |
| | 30 X 24 X 8 | EBH302408 | EBH302408 | ----- | ----- | 33 |
| | 30 X 24 X 10 | EBH302410 | EBH302410 | ----- | ----- | 36 |
| | 30 X 24 X 12 | EBH302412 | EBH302412 | ----- | ----- | 39 |
| | 30 X 24 X 16 | EBH302416 | EBH302416 | ----- | ----- | 45 |
| | 30 X 24 X 20 | EBH302420 | EBH302420 | ----- | ----- | 51 |
| | 30 X 24 X 24 | EBH302424 | EBH302424 | ----- | ----- | 57 |
| | 30 X 30 X 8 | EBH303008 | EBH303008 | ----- | ----- | 39 |
| | 30 X 30 X 12 | EBH303012 | EBH303012 | ----- | ----- | 46 |
| | 30 X 36 X 8 | EBH303608 | EBH303608 | ----- | ----- | 46 |
| | 36 X 24 X 6 | EBH362406 | EBH362406 | ----- | ----- | 35 |
| | 36 X 24 X 8 | EBH362408 | EBH362408 | ----- | ----- | 29 |
| | 36 X 24 X 10 | EBH362410 | EBH362410 | ----- | ----- | 42 |

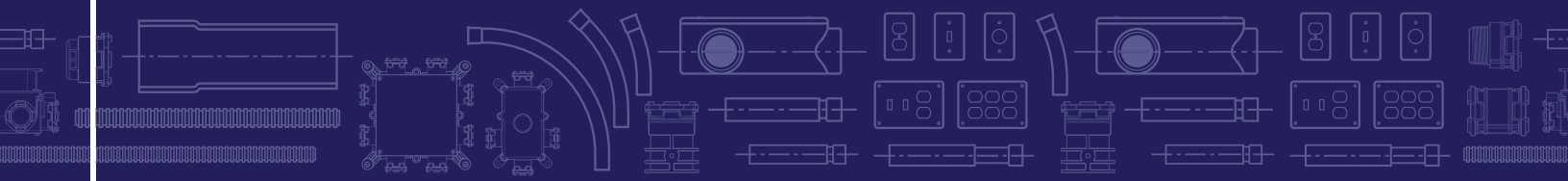

**Our various pipe and fittings solutions have been manufactured to meet the needs of our customers and their applications. Contact the below Sales Center for more information:**

- Plumbing Fittings Solutions
- Electrical Pipe & Fittings Solutions
- Municipal Pipe & Fittings Solutions



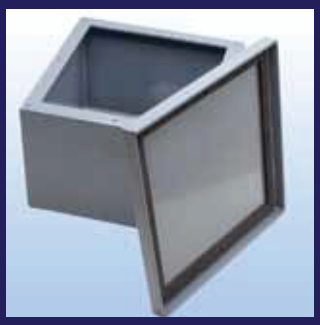

**Sales & Distribution Center:**

Royal Building Products
56400 Mound Road
Shelby Twp., MI 48316
T 1.800.232.5690
F 586.781.0888

royalbuildingproducts.com/plastic-trends

Printed 11.2012

ROYAL
Building Products

Pipe & Fittings Solutions | Municipal Plumbing Electrical

# Electrical Non-Metallic PVC Products

PVC Fittings
ENT Pipe and Fittings
Enclosures

Category E Product BRV1
October, 2012

**E Series**







ROYAL Electrical Solutions

# Contents

## Rigid PVC Conduit Fittings

Pages 4 - 25

Shown in Alphabetical Order


Access Fittings ..... 6-8
- Type C ..... 6
- Type E ..... 7
- Type LB ..... 6
- Type LL ..... 7
- Type LR ..... 7
- Type T ..... 8
- Type TB ..... 8

Bell End (Hub X Spigot) - Molded ..... 9
Coupling ..... 4
5° Coupling ..... 4
Double Gang Box - F Series ..... 12
Double Gang Weatherproof Cover Plate ..... 11
Duct - Base Vertical Lock Spacer ..... 15
Duct - Intermediate Vertical Lock Spacer ..... 14
Duplex Floor Box Cover ..... 13
Duplex Floor Box ..... 13
ECOVOC Low VOC / Clear Cement ..... 15

Elbows ..... 16-25
Schedule 40
- Radius Elbow Belled - 45° 24" Radius ..... 22
- Special Radius Elbow Belled - 45° 36" Radius ..... 22
- Special Radius Elbow Belled - 45° 48" Radius ..... 22
- Special Radius Elbow Belled - 90° 24" Radius ..... 21
- Special Radius Elbow Belled - 90° 36" Radius ..... 21
- Special Radius Elbow Belled - 90° 48" Radius ..... 22
- Special Radius Elbow Plain End - 45° 24" Radius ..... 20
- Special Radius Elbow Plain End - 45° 36" Radius ..... 21
- Special Radius Elbow Plain End - 45° 48" Radius ..... 21
- Special Radius Elbow Plain End - 90° 24" Radius ..... 19
- Special Radius Elbow Plain End - 90° 36" Radius ..... 20
- Special Radius Elbow Plain End - 90° 48" Radius ..... 20
- Standard Elbows - 11 1/4° Elbow - Plain End ..... 17
- Standard Elbows - 22 1/2° Elbow - Plain End ..... 17
- Standard Elbows - 30° Elbow - Bell End ..... 18
- Standard Elbows - 30° Elbow - Plain End ..... 17
- Standard Elbows - 45° Elbow - Bell End ..... 18
- Standard Elbows - 45° Elbow - Plain End ..... 16
- Standard Elbows - 90° Elbow - Bell End ..... 18
- Standard Elbows - 90° Elbow - Plain End ..... 16

Schedule 80
- Special Radius Elbow Belled - 45° 24" Radius ..... 25
- Special Radius Elbow Belled - 45° 36" Radius ..... 25
- Special Radius Elbow Belled - 45° 48" Radius ..... 25
- Special Radius Elbow Belled - 90° 24" Radius ..... 24
- Special Radius Elbow Belled - 90° 36" Radius ..... 24
- Special Radius Elbow Belled - 90° 48" Radius ..... 24
- Special Radius Elbow Plain End ..... 23
- Special Radius Elbow Plain End - 45° 48" Radius ..... 24
- Special Radius Elbow Plain End - 90° 24" Radius ..... 22
- Special Radius Elbow Plain End - 90° 36" Radius ..... 23
- Special Radius Elbow Plain End - 90° 48" Radius ..... 23
- Standard Elbows - 45° Elbow - Plain End ..... 19
- Standard Elbows - 90° Elbow - Plain End ..... 19

Expansions Joint ..... 5
Junction Box Adapters ..... 13
Junction Box with Gasket ..... 13
KO Plug ..... 12
Meter Offset ..... 5
Meter Riser Kit ..... 14
Octagonal Box ..... 12
Octagonal Box Extension Ring ..... 12
Pipe Strap PVC - 2 Hole ..... 5
Pull Elbow ..... 9
Reducer Bushing ..... 10
Service Entrance Fitting ..... 6
Single Gang Box - F Series ..... 11
Single Gang Cover Plate - F Series ..... 10
Single Gang Deep Box - FD Series ..... 11
Single Gang Weatherproof Cover Plate ..... 11
Slip Meter Riser ..... 14
Solvent Weld End Cap ..... 9
Strain Relief Connector ..... 8
Threaded Strain Relief Connector ..... 8
Terminal Adapter ..... 4
- Female ..... 5
- Male ..... 4

Threaded Reducer Bushing ..... 9
Universal Plug w/Pulling Eye ..... 15
Vinyl Siding Electrical Mount ..... 16

# Contents

## Rigid PVC Conduit Fittings with Brass Fasteners

Pages 26 - 29

Shown in Alphabetical Order


Access Fitting
- Type C ..... 26
- Type E ..... 27
- Type LL ..... 26
- Type LR ..... 27
- Type T ..... 27
- Type TB ..... 27
- Type LB ..... 26

Double Gang Box - F Serie ..... 28
Double Gang Weatherproof Cover Plate ..... 29
Junction Box with Gasket ..... 28
Single Gang Box - F Series ..... 28
Single Gang Cover Plate - F Series ..... 29
Single Gang Deep Box - FD Series ..... 28
Single Gang Weatherproof Cover Plate ..... 29


## ENT - Tubing

Pages 30 - 31

Shown in Alphabetical Order


Coils
- Blue ENT Tubing ..... 30
- Grey ENT Tubing ..... 30

Reels
- Blue ENT Tubing ..... 30
- Grey ENT Tubing ..... 31

Straight Length
- Blue ENT Tubing ..... 31
- Grey ENT Tubing ..... 31


## ENT - Fittings

Pages 32 - 35

Shown in Alphabetical Order


45 Degree Angled Form Stubby (Polyethylene) ..... 33
Adapter with set screw ..... 32
Clip Ring ..... 32
Coupling ..... 32
Deep Single Gang Concrete Wall Box ..... 35
Isolator Module Slab Box ..... 34
Quick-Snap Terminal Adapter ..... 32
Shallow Single Gang Concrete Wall Box ..... 35
Shallow Slab Box ..... 34
Slab Box Extension Ring ..... 33
Slab Box with Hub Extensions and Grey Lid ..... 34
Slab Box with Knockouts and Grey Lid ..... 34
Threaded Terminal Adapter with Lock Nut ..... 32
Heavy Duty Lock Nut ..... 33
Straight Stubby (Polyethylene) ..... 33
Tapered Plug (Polyethylene) ..... 33


## PVC Enclosures

Pages 36 - 38

Shown in Alphabetical Order


Electrical Enclosures ..... 38
Electrical Trough Box
- Latch Cover ..... 36
- Screw Cover ..... 36

Large Fabricated Junction Boxes ..... 37

# Rigid PVC Conduit Fittings

| Item | Size in Inches | Part Number | Reference Royal | Reference CANTEX | Reference Thomas & Betts - Carlon | Carton Qty |
|---|---|---|---|---|---|---|
| **COUPLING** | | | | | | |
|  | 1/2″ | E010050 | REC10 | 6141623 | E940D | 200 |
| | 3/4″ | E010075 | REC15 | 6141624 | E940E | 125 |
| | 1″ | E010100 | REC20 | 6141625 | E940F | 70 |
| | 1 1/4″ | E010125 | REC25 | 6141626 | E940G | 40 |
| | 1 1/2″ | E010150 | REC30 | 6141627 | E940H | 30 |
| | 2″ | E010200 | REC35 | 6141628 | E940J | 40 |
| | 2 1/2″ | E010250 | REC40 | 6141629 | E940K | 20 |
| | 3″ | E010300 | REC45 | 6141630 | E940L | 40 |
| | 3 1/2″ | E010350 | REC50 | 6141631 | E940M | 30 |
| | 4″ | E010400 | REC55 | 6141632 | E940N | 20 |
| | 5″ | E010500 | REC60 | 6141633 | E940P | 10 |
| | 6″ | E010600 | REC65 | 6141634 | E940R | 8 |
| | 8″ | E010800 | ----- | 6141635D | ----- | 3 |
| **5° COUPLING** | | | | | | |
|  | 2″ | E013200 | R5EC35 | 6151457 | E245J | 20 |
| | 2 1/2″ | E013250 | R5EC40 | ----- | ----- | 12 |
| | 3″ | E013300 | R5EC45 | 6151458 | ----- | 25 |
| | 3 1/2″ | E013350 | R5EC50 | ----- | ----- | 15 |
| | 4″ | E013400 | R5EC55 | 6151459 | E245N | 15 |
| | 5″ | E013500 | R5EC60 | 6151460 | E245P | 8 |
| | 6″ | E013600 | R5EC65 | 6151461 | E245R | 4 |
| **TERMINAL ADAPTER** | | | | | | |
|  | 1/2″ | E011050 | RTA10 | 5140103 | E943D | 200 |
| | 3/4″ | E011075 | RTA15 | 5140104 | E943E | 125 |
| | 1″ | E011100 | RTA20 | 5140105 | E943F | 70 |
| | 1 1/4″ | E011125 | RTA25 | 5140106 | E943G | 40 |
| | 1 1/2″ | E011150 | RTA30 | 5140107 | E943H | 30 |
| | 2″ | E011200 | RTA35 | 5140108 | E943J | 40 |
| | 2 1/2″ | E011250 | RTA40 | 5140109 | E943K | 20 |
| | 3″ | E011300 | RTA45 | 5140110 | E943L | 40 |
| | 3 1/2″ | E011350 | RTA50 | 5140111 | E943M | 30 |
| | 4″ | E011400 | RTA55 | 5140112 | E943N | 20 |
| | 5″ | E011500 | RTA60 | 5140113 | E943P | 10 |
| | 6″ | E011600 | RTA65 | 5140114 | E943R | 8 |

# Rigid PVC Conduit Fittings

| Item | Size in Inches | Part Number | Reference Royal | Reference CANTEX | Reference Thomas & Betts - Carlon | Carton Qty |
|---|---|---|---|---|---|---|
| **FEMALE ADAPTER (NPT TAPERED THREAD)** | | | | | | |
|  | 1/2″ | E012050 | RFA10 | 5140043 | E942D | 200 |
| | 3/4″ | E012075 | RFA15 | 5140044 | E942E | 125 |
| | 1″ | E012100 | RFA20 | 5140045 | E942F | 70 |
| | 1 1/4″ | E012125 | RFA25 | 5140046 | E942G | 40 |
| | 1 1/2″ | E012150 | RFA30 | 5140047 | E942H | 30 |
| | 2″ | E012200 | RFA35 | 5140048 | E942J | 40 |
| | 2 1/2″ | E012250 | RFA40 | 5140049 | E942K | 20 |
| | 3″ | E012300 | RFA45 | 5140050 | E942L | 40 |
| | 3 1/2″ | E012350 | RFA50 | 5140051 | E942M | 30 |
| | 4″ | E012400 | RFA55 | 5140052 | E942N | 20 |
| | 5″ | E012500 | RFA60 | 5140053 | E942P | 10 |
| | 6″ | E012600 | RFA65 | 5140054 | E942R | 8 |
| **EXPANSIONS JOINT** | | | | | | |
|  | 1/2″ | E016050 | REJ10 | 5144031 | E945D | 25 |
| | 3/4″ | E016075 | REJ15 | 5144032 | E945E | 10 |
| | 1″ | E016100 | REJ20 | 5144033 | E945F | 10 |
| | 1 1/4″ | E016125 | REJ25 | 5144034 | E945G | 5 |
| | 1 1/2″ | E016150 | REJ30 | 5144035 | E945H | 5 |
| | 2″ | E016200 | REJ35 | 5144036 | E945J | 25 |
| | 2 1/2″ | E016250 | REJ40 | 5144037 | E945K | 12 |
| | 3″ | E016300 | REJ45 | 5144038 | E945L | 12 |
| | 3 1/2″ | E016350 | REJ50 | 5144039 | E945M | 6 |
| | 4″ | E016400 | REJ55 | 5144040 | E945N | 6 |
| | 5″ | E016500 | REJ60 | 5144041 | E945P | 1 |
| | 6″ | E016600 | REJ65 | 5144042 | E945R | 1 |
| **PIPE STRAP PVC - 2 HOLE** | | | | | | |
|  | 1/2″ | E039050 | RPS10 | 5133736 | E977DC | 300 |
| | 3/4″ | E039075 | RPS15 | 5133737 | E977EC | 200 |
| | 1″ | E039100 | RPS20 | 5133738 | E977FC | 200 |
| | 1 1/4″ | E039125 | RPS25 | 5133733 | E977GC | 200 |
| | 1 1/2″ | E039150 | RPS30 | 5133734 | E977HC | 200 |
| | 2″ | E039200 | RPS35 | 5133735 | E977JC | 200 |
| **METER OFFSET** | | | | | | |
|  | 1 1/4″ | E024125 | RMO25 | 5133183 | E995G | 15 |
| | 2″ | E024200 | RMO35 | 5133185 | E995J | 8 |

# Rigid PVC Conduit Fittings

| Item | Size in Inches | Part Number | Reference Royal | Reference CANTEX | Reference Thomas & Betts - Carlon | Carton Qty |
|---|---|---|---|---|---|---|
| **SERVICE ENTRANCE FITTING** | | | | | | |
|  | 1/2″ | E025050 | REF10 | 5133590 | ----- | 10 |
| | 3/4″ | E025075 | REF15 | 5133591 | E998E CAR | 10 |
| | 1″ | E025100 | REF20 | 5133741 | E998F CAR | 20 |
| | 1 1/4″ | E025125 | REF25 | 5133742 | E998G CAR | 20 |
| | 1 1/2″ | E025150 | REF30 | 5133695 | E998H CAR | 20 |
| | 2″ | E025200 | REF35 | 5133743 | E998J | 5 |
| | 2 1/2″ | E025250 | REF40 | 5133696 | E998K UPC | 5 |
| | 3″ | E025300 | REF45 | 5133697 | E998L | 5 |
| | 3 1/2″ | E025350 | REF50 | 5133698 | ----- | 5 |
| | 4″ | E025400 | REF55 | 5133699 | E998N | 1 |
| **ACCESS FITTING - TYPE LB** | | | | | | |
|  | 1/2″ | E033050 | RSLB10S | 5133663 | E986D CAR | 25 |
| | 3/4″ | E033075 | RSLB20S | 5133664 | E986E CAR | 15 |
| | 1″ | E033100 | RSLB30S | 5133665 | E986F CAR | 10 |
| | 1 1/4″ | E033125 | RSLB40S | 5133666 | E986G CAR | 10 |
| | 1 1/2″ | E033150 | RSLB50S | 5133667 | E986H CAR | 10 |
| | 2″ | E033200 | RSLB60S | 5133668 | E986J | 5 |
| | 2 1/2″ | E033250 | RSLB70S | 5133669 | E986K | 5 |
| | 3″ | E033300 | RSLB80S | 5133670 | E986L | 5 |
| | 3 1/2″ | E033350 | RSLB90S | 5133671 | E986M | 4 |
| | 4″ | E033400 | RSLB100S | 5133672 | E986N | 4 |
| **ACCESS FITTING - TYPE C** | | | | | | |
|  | 1/2″ | E032050 | RSC10S | 5133101 | E987D CAR | 25 |
| | 3/4″ | E032075 | RSC20S | 5133102 | E987E CAR | 15 |
| | 1″ | E032100 | RSC30S | 5133103 | E987F CAR | 10 |
| | 1 1/4″ | E032125 | RSC40S | 5133104 | E987G CAR | 10 |
| | 1 1/2″ | E032150 | RSC50S | 5133105 | E987H CAR | 10 |
| | 2″ | E032200 | RSC60S | 5133106 | E987J | 5 |
| | 2 1/2″ | E032250 | RSC70S | 5133108 | ----- | 5 |
| | 3″ | E032300 | RSC80S | 5133107 | ----- | 5 |
| | 3 1/2″ | E032350 | RSC90S | 5133110 | ----- | 4 |
| | 4″ | E032400 | RSC100S | 5133109 | ----- | 4 |

# Rigid PVC Conduit Fittings

| Item | Size in Inches | Part Number | Reference Royal | Reference CANTEX | Reference Thomas & Betts - Carlon | Carton Qty |
|---|---|---|---|---|---|---|
| **ACCESS FITTING - TYPE LL** | | | | | | |
| 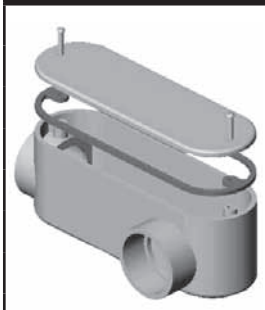 | 1/2″ | E034050 | RSLL10S | 5133660 | E984D CAR | 25 |
| | 3/4″ | E034075 | RSLL20S | 5133661 | E984E CAR | 15 |
| | 1″ | E034100 | RSLL30S | 5133662 | E984F CAR | 10 |
| | 1 1/4″ | E034125 | RSLL40S | 5133649 | E984G CAR | 10 |
| | 1 1/2″ | E034150 | RSLL50S | 5133648 | E984H CAR | 10 |
| | 2″ | E034200 | RSLL60S | 5133647 | E984J | 5 |
| | 2 1/2″ | E034250 | RSLL70S | 5133644 | ------ | 5 |
| | 3″ | E034300 | RSLL80S | 5133646 | ------ | 5 |
| | 3 1/2″ | E034350 | RSLL90S | 5133640 | ------ | 4 |
| | 4″ | E034400 | RSLL100S | 5133645 | ------ | 4 |
| **ACCESS FITTING - TYPE LR** | | | | | | |
| 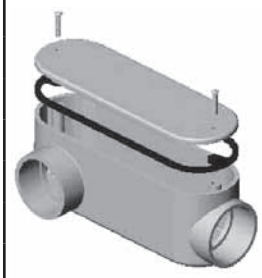 | 1/2″ | E035050 | RSLR10S | 5133650 | E985D CAR | 25 |
| | 3/4″ | E035075 | RSLR20S | 5133651 | E985E CAR | 15 |
| | 1″ | E035100 | RSLR30S | 5133652 | E985F CAR | 10 |
| | 1 1/4″ | E035125 | RSLR40S | 5133653 | E985G CAR | 10 |
| | 1 1/2″ | E035150 | RSLR50S | 5133654 | E985H CAR | 10 |
| | 2″ | E035200 | RSLR60S | 5133655 | E985J | 5 |
| | 2 1/2″ | E035250 | RSLR70S | 5133658 | ------ | 5 |
| | 3″ | E035300 | RSLR80S | 5133656 | ------ | 5 |
| | 3 1/2″ | E035350 | RSLR90S | 5133659 | ------ | 4 |
| | 4″ | E035400 | RSLR100S | 5133657 | ------ | 4 |
| **ACCESS FITTING - TYPE E** | | | | | | |
| 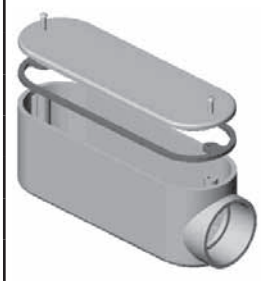 | 1/2″ | E036050 | RSE10S | 5133151 | E998D CAR | 25 |
| | 3/4″ | E036075 | RSE20S | 5133152 | E998E | 15 |
| | 1″ | E036100 | RSE30S | 5133153 | E988F CAR | 10 |
| | 1 1/4″ | E036125 | RSE40S | 5133154 | E988G CAR | 10 |
| | 1 1/2″ | E036150 | RSE50S | 5133155 | E988H CAR | 10 |
| | 2″ | E036200 | RSE60S | 5133156 | E988J | 5 |
| | 2 1/2″ | E036250 | RSE70S | 5133157 | ------ | 5 |
| | 3″ | E036300 | RSE80S | 5133158 | ------ | 5 |
| | 3 1/2″ | E036350 | RSE90S | 5133160 | ------ | 4 |
| | 4″ | E036400 | RSE100S | 5133159 | ------ | 4 |

# Rigid PVC Conduit Fittings

| Item | Size in Inches | Part Number | Reference Royal | Reference CANTEX | Reference Thomas & Betts - Carlon | Carton Qty |
|---|---|---|---|---|---|---|
| **ACCESS FITTING - TYPE T** | | | | | | |
| 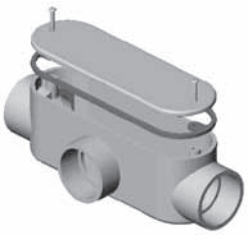 | 1/2″ | E037050 | RST10S | 5133563 | E983D CAR | 25 |
| | 3/4″ | E037075 | RST20S | 5133564 | E983E CAR | 15 |
| | 1″ | E037100 | RST30S | 5133565 | E983F | 10 |
| | 1 1/4″ | E037125 | RST40S | 5133566 | E983G | 10 |
| | 1 1/2″ | E037150 | RST50S | 5133567 | E983H CAR | 10 |
| | 2″ | E037200 | RST60S | 5133568 | E983J | 5 |
| | 2 1/2″ | E037250 | RST70S | 5133569 | ----- | 2 |
| | 3″ | E037300 | RST80S | 5133570 | ----- | 2 |
| | 3 1/2″ | E037350 | RST90S | 5133572 | ----- | 1 |
| | 4″ | E037400 | RST100S | 5133571 | ----- | 1 |
| **ACCESS FITTING - TYPE TB** | | | | | | |
|  | 1/2″ | E069050 | RSTB10S | ----- | ----- | 30 |
| | 3/4″ | E069075 | RSTB20S | ----- | ----- | 20 |
| | 1″ | E069100 | RSTB30S | ----- | ----- | 10 |
| | 1 1/4″ | E069125 | RSTB40S | ----- | ----- | 10 |
| **STRAIN RELIEF CONNECTOR** | | | | | | |
|  | 3/4″ | E030075 | RSRC15 | ----- | ----- | 25 |
| **THREADED STRAIN RELIEF CONNECTOR** | | | | | | |
|  | 1/2″ | E031050 | RTSRC10 | 5133430 | ----- | 25 |
| | 3/4″ | E031075 | RTSRC15 | 5133431 | ----- | 25 |

# Rigid PVC Conduit Fittings

| Item | Size in Inches | Part Number | Reference Royal | Reference CANTEX | Reference Thomas & Betts - Carlon | Carton Qty |
|---|---|---|---|---|---|---|
| **PULL ELBOW** | | | | | | |
| 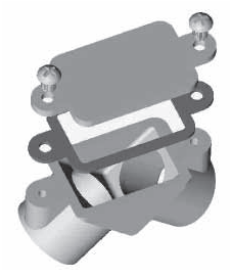 | 1/2″ | E027050 | RPE10 | 5240100 | E990DR CAR | 75 |
| | 3/4″ | E027075 | RPE15 | 5240101 | E990ER CAR | 50 |
| **SOLVENT WELD END CAP** | | | | | | |
|  | 1/2″ | E026050 | RCAP10 | 5140031 | E958D | 100 |
| | 3/4″ | E026075 | RCAP15 | 5140032 | E958E | 100 |
| | 1″ | E026100 | RCAP20 | 5140033 | E958F | 50 |
| | 1 1/4″ | E026125 | RCAP25 | 5140034 | E958G | 25 |
| | 1 1/2″ | E026150 | RCAP30 | 5140035 | E958H | 25 |
| | 2″ | E026200 | RCAP35 | 5140037 | E958J | 50 |
| | 2 1/2″ | E026250 | RCAP40 | 5140038 | E958K | 25 |
| | 3″ | E026300 | RCAP45 | 5140039 | E958L | 25 |
| | 4″ | E026400 | RCAP55 | 5140040 | E958N | 25 |
| | 5″ | E026500 | RCAP60 | 5140041 | E958P | 25 |
| | 6″ | E026600 | RCAP65 | 5140042 | E958R | 10 |
| | 8″ | E026800 | ----- | ----- | ----- | 6 |
| **THREADED REDUCER BUSHING** | | | | | | |
|  | 3/4″ X 1/2″ | E0150705 | R1825 | ----- | E9842D | 200 |
| | 1″ X 1/2″ | E0151005 | R1826 | ----- | ----- | 200 |
| | 1″ X 3/4″ | E0151007 | R1827 | ----- | E9842E | 200 |
| **BELL END (HUB X SPIGOT) - MOLDED** | | | | | | |
|  | 1/2″ | E070050 | REB10 | 5144003 | ----- | 100 |
| | 3/4″ | E070075 | REB15 | 5144004 | ----- | 100 |
| | 1″ | E070100 | REB20 | 5144005 | E997F | 50 |
| | 1 1/4″ | E070125 | REB25 | 5144006 | E997G | 50 |
| | 1 1/2″ | E070150 | REB30 | 5144007 | E997H | 50 |
| | 2″ | E070200 | REB35 | 5144008 | E997J | 40 |
| | 2 1/2″ | E070250 | REB40 | 5144009 | E997K | 30 |
| | 3″ | E070300 | REB45 | 5144010 | E997L | 50 |
| | 3 1/2″ | E070350 | REB50 | 5144011 | E997M | 50 |
| | 4″ | E070400 | REB55 | 5144012 | E997N | 50 |
| | 5″ | E070500 | REB60 | 5144013 | E997P | 25 |
| | 6″ | E070600 | REB65 | 5144014 | E997R | 15 |

# Rigid PVC Conduit Fittings

| Item | Size in Inches | Part Number | Reference Royal | Reference CANTEX | Reference Thomas & Betts - Carlon | Carton Qty |
|---|---|---|---|---|---|---|
| **REDUCER BUSHING** | | | | | | |
|  | 3/4" X 1/2" | E0140705 | R1805 | 5142220 | E950ED | 100 |
| | 1" X 1/2" | E0141005 | R1805 1 | ----- | E950FD CAR | 3 BAGS X 100 |
| | 1" X 3/4" | E0141007 | R1806 | 5142221 | E950FE | 100 |
| | 1 1/4" X 3/4" | E0141207 | R1807 1 | ----- | E950GE CAR | 2 BAGS X 25 |
| | 1 1/4" X 1" | E0141210 | R1807 | 5142222 | E950GF | 50 |
| | 1 1/2" X 1" | E0141510 | R1808 1 | ----- | E950HF CAR | 50 |
| | 1 1/2" X 1 1/4" | E0141512 | R1808 | 514223 | E950HG CAR | 50 |
| | 2" X 1" | E0142010 | R1809 1 | ----- | ----- | 50 |
| | 2" X 1 1/4" | E0142012 | R1809 | ----- | E950JG CAR | 25 |
| | 2" X 1 1/2" | E0142015 | R1810 | 5142224 | E950JH CAR | 25 |
| | 2 1/2" X 2" | E0142520 | R1811 | 5142225 | E950KJ CAR | 25 |
| | 3" X 2" | E0143020 | R1812 1 | ----- | E950LJ CAR | 25 |
| | 3" X 2 1/2" | E0143025 | R1812 | 5142226 | E950LK | 25 |
| | 4" X 2" | E0144020 | R1813 1 | ----- | ----- | 15 |
| | 4" X 3" | E0144030 | R1813 | 5142227 | E950NL | 20 |
| | 4" 3 1/2" | E0144035 | R1814 | 5142229 | ----- | 20 |
| **SINGLE GANG COVER PLATE - F SERIES** | | | | | | |
| 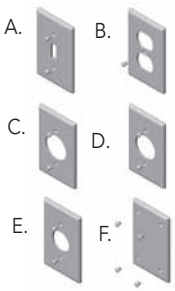 | A. TOGGLE | E046002 | RTSC15/10 | ----- | ----- | 100 |
| | B. DUPLEX | E046001 | RDRC15/10 | ----- | ----- | 100 |
| | C. 15 AMP | E046004 | R20RC15/10 | ----- | ----- | 100 |
| | D. 20 AMP | E046003 | R20 3RC15/10 | ----- | ----- | 100 |
| | E. 30 AMP | E046005 | R30 3RC15/10 | ----- | ----- | 100 |
| | F. BLANK W/ GASKET | E046006 | RBRC15/10 | 5133362 | E980CN CAR | 50 |

# Rigid PVC Conduit Fittings

| Item | Size in Inches | Part Number | Reference Royal | Reference CANTEX | Reference Thomas & Betts - Carlon | Carton Qty |
|---|---|---|---|---|---|---|
| **SINGLE GANG WEATHERPROOF COVER PLATE** | | | | | | |
| 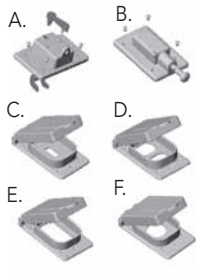 | A. TOGGLE S/ COVER | E047002 | RVSC15/10 | 5133330 | E98TSCN CAR | 10 |
| | B. PLUNGER S/ COVER | E047008 | RVPT15/10 | 5133335 | ------ | 10 |
| | C. TOGGLE | E047009 | RWTG15/10 | 5133361 | E98SSNCN CAR | 10 |
| | D. DUPLEX | E047001 | RWDR15/10 | 5133352 | E98GDRN CAR | 10 |
| | D. DUPLEX WHITE | E047010 | RWDR15/10W | ------ | ------ | 20 |
| | E. GROUND FAULT | E047007 | RWGF15/10 | 5133348 | E98GFCN CAR | 10 |
| | E. GROUND FAULT WHITE | E047011 | RWGF15/10W | ------ | ------ | 20 |
| | F. 15 AMP | E047003 | RWTL15 | 5133350 | E98SRCN CAR | 10 |
| | F. 20 AMP | E047004 | RWTL20 | 5133320 | E98G20N | 10 |
| | F. 30 AMP | E047005 | RWTL30 | 5133321 | E98G30N CAR | 10 |
| | F. 50 AMP | E047006 | RWTL50 | 5133322 | E98G5FN CAR | 10 |
| **DOUBLE GANG WEATHERPROOF COVER PLATE** | | | | | | |
| 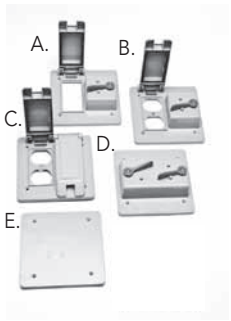 | B. GFI & TOGGLE | E049005 | ------ | 5133345 | E9G2GTN CAR | 10 |
| | C. DUPLEX & TOGGLE | E049006 | ------ | 5133337 | E9GDSN CAR | 10 |
| | D. DOUBLE DU PLEX | E049007 | ------ | 5133347 | E9GDDN CAR | 10 |
| | E. TOGGLE | E049008 | ------ | 5133331 | E9G2SSN | 10 |
| | F. BLANK | E049009 | | 5133410 | E9802CN CAR | 25 |
| **SINGLE GANG BOX - F SERIES** | | | | | | |
| 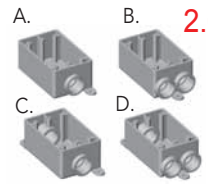 | A. 1/2" FS | E042001 | RFS10 | 5133363 | E980DFN | 10 |
| | A. 3/4" FS | E042002 | RFS15 | 5133364 | E980EFN | 10 |
| | B. 1/2" FSS | E042003 | RFSS10 | 5133540 | E982DFN | 10 |
| | B. 3/4" FSS | E042004 | RFSS15 | 5133542 | E982EFN | 10 |
| | C. 1/2" FSC | E042005 | RFSC10 | 5133463 | E981DFN | 10 |
| | C. 3/4" FSC | E042006 | RFSC15 | 5133464 | E981EFN | 10 |
| | D. 1/2" FSCC | E042007 | RFSCC10 | 5133544 | E979DFN CAR | 10 |
| | D. 3/4" FSCC | E042008 | RFSCC15 | 5133545 | E979ERN CAR | 10 |
| **SINGLE GANG DEEP BOX - FD SERIES** | | | | | | |
| 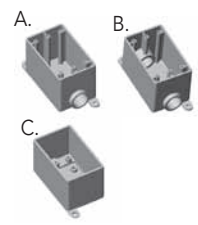 | A. 1/2" FDS | E043001 | RFDS10 | 5133300 | E9801DN | 10 |
| | A. 3/4" FDS | E043002 | RFDS15 | 5133301 | E9801EN | 10 |
| | A. 1" FDS | E043003 | RFDS20 | 5133302 | E9801FN | 10 |
| | B. 1/2" FDC | E043004 | RFDC10 | 5133310 | E9811DN | 10 |
| | B. 3/4" FDC | E043005 | RFDC15 | 5133311 | E9811EN | 10 |
| | B. 1" FDC | E043006 | RFDC20 | 5133312 | E9811FN | 10 |
| | C. BLANK | E043007 | RFD | 5133420 | E9801 | 10 |

# Rigid PVC Conduit Fittings

| Item | Size in Inches | Part Number | Reference Royal | Reference CANTEX | Reference Thomas & Betts - Carlon | Carton Qty |
|---|---|---|---|---|---|---|
| **DOUBLE GANG BOX - F SERIES** | | | | | | |
| 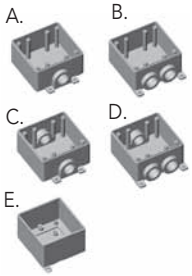 | A. 1/2" FS | E041001 | ----- | 5133380 | E9802D | 5 |
| | A. 3/4" FS | E041002 | ----- | 5133381 | E9802E | 5 |
| | A. 1" FS | E041003 | ----- | 5133382 | E9802F | 5 |
| | B. 1/2" FSS | E041004 | ----- | 5133390 | ----- | 5 |
| | B. 3/4" FSS | E041005 | ----- | 5133391 | ----- | 5 |
| | B. 1" FSS | E041006 | ----- | 5133392 | ----- | 5 |
| | C. 1/2" FSC | E041007 | ----- | 5133370 | E9812D | 5 |
| | C. 3/4" FSC | E041008 | ----- | 5133371 | E9812E | 5 |
| | C. 1" FSC | E041009 | ----- | 5133372 | E9812F | 5 |
| | D. 1/2" FSCC | E041011 | ----- | 5133400 | ----- | 5 |
| | D. 3/4" FSCC | E041012 | ----- | 5133401 | ----- | 5 |
| | D. 1" FSCC | E041013 | ----- | 5133402 | ----- | 5 |
| | E. BLANK | E041010 | ----- | ----- | E9802 | 5 |
| **OCTAGONAL BOX** | | | | | | |
|  | 4" X 1 1/2" (3/4" X1/2") | E028150 | ROB15/10 | ----- | ----- | 20 |
| | 4" X 2" (1") | E028200 | ROB20 | ----- | ----- | 12 |
| **KO PLUG** | | | | | | |
| | 3/4" | E067075 | RKO15 | ----- | ----- | 1 |
| | 1" | E067100 | RTKO20 | ----- | ----- | 1 |
| **OCTAGONAL BOX EXTENSION RING** | | | | | | |
|  | 1" | E029100 | RXR20 | ----- | ----- | 20 |
| | 2" | E029200 | RXR35 | ----- | ----- | 20 |

# Rigid PVC Conduit Fittings

| Item | Size in Inches | Part Number | Reference Royal | Reference CANTEX | Reference Thomas & Betts - Carlon | Carton Qty |
|---|---|---|---|---|---|---|
| **DUPLEX FLOOR BOX/ LEVEL RING/ POUR COVER/ REDUCER BUSHING** | | | | | | |
|  | 4 - 3/4" | E068004 | RFDB4 | 5133760 | E971FB | 9 |
| | 2 - 1", 2 - 3/4" | E068001 | RFDB2 | 5133758 | E971FB | 9 |
| **DUPLEX FLOOR BOX COVER** | | | | | | |
|  | POLY BRONZE COVER | E068003 | RFDBC | 5133678 | | 10 |
| **JUNCTION BOX WITH GASKET** | | | | | | |
| 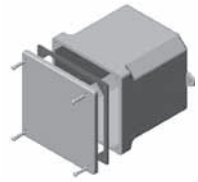 | 4" X 4" X 2" | E051442 | RJB442 | 5133705 | E989NNJ CAR | 10 |
| | 4" X 4" X 4" | E051444 | RJB444 | 5133709 | E987N CAR | 10 |
| | 4" X 4" X 6" | E051446 | RJB446 | 5133707 | E989NNR CAR | 10 |
| | 5" X 5" X 2" | E051552 | RJB552 | 5133706 | E989PPJ CAR | 10 |
| | 6" X 6" X 4" | E051664 | RJB664 | 5133710 | E987R CAR | 10 |
| | 6" X 6" X 6" | E051666 | RJB666 | 5133711 | E989RRR UPC | 5 |
| | 8" X 8" X 4" | E051884 | RJB884 | 5133712 | E989N CAR | 5 |
| | 8" X 8" X 7" | E051887 | RJB887 | 5133708 | E989SSX UPC | 4 |
| | 12" X 12" X 4" | E05112124 | RJB12124 | 5133714 | E989UUN | 2 |
| | 12" X 12" X 6" | E05112126 | RJB12126 | 5133713 | E989R UPC | 2 |
| | 12" X 12" X 8" | E05112128 | RJB12128 | | | 3 |
| **JUNCTION BOX ADAPTERS** | | | | | | |
| 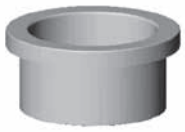 | 1/2" | E059050 | RJBA10 | 5133715 | E996D | 100 |
| | 3/4" | E059075 | RJBA15 | 5133716 | E996E | 100 |
| | 1" | E059100 | RJBA20 | 5133717 | E996F | 100 |
| | 1 1/4" | E059125 | RJBA25 | 5133718 | E996G | 50 |
| | 1 1/2" | E059150 | RJBA30 | 5133719 | E996H | 50 |
| | 2" | E059200 | RJBA35 | 5133720 | E996J | 25 |
| | 2 1/2" | E059250 | RJBA40 | 5133721 | E996K CAR | 10 |
| | 3" | E059300 | RJBA45 | 5133722 | E996L | 10 |
| | 3 1/2" | E059350 | RJBA50 | 5133723 | | 10 |
| | 4" | E059400 | RJBA55 | 5133724 | E996N | 10 |

# Rigid PVC Conduit Fittings

| Item | Size in Inches | Part Number | Reference Royal | Reference CANTEX | Reference Thomas & Betts - Carlon | Carton Qty |
|---|---|---|---|---|---|---|
| **METER RISER KIT** | | | | | | |
| 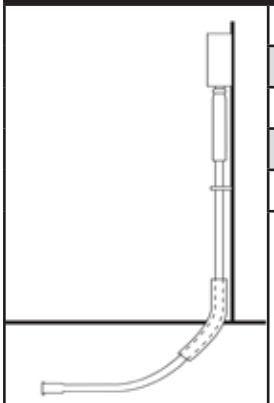 | 1 1/4″ | E092125 | ----- | ----- | ----- | 1 |
| | 1 1/2″ | E092150 | ----- | ----- | ----- | 1 |
| | 2″ | E092200 | ----- | ----- | ----- | 1 |
| | 2 1/2″ | E092250 | ----- | ----- | ----- | 1 |
| | 3″ | E092300 | ----- | ----- | ----- | 1 |
| **SLIP METER RISER** | | | | | | |
|  | 2″ | E093200 | ----- | 5144028 | E954JXX | 20 |
| | 2 1/2″ | E093250 | ----- | 5144030 | E954KXX | 15 |
| | 3″ | E093300 | ----- | 5144043 | E954LXX | 10 |
| | 4″ | E093400 | ----- | 5144027 | E954NXX | 5 |
| **DUCT - INTERMEDIATE VERTICAL LOCK SPACER** | | | | | | |
|  | 2 X 1 1/2″ | IS2015 | IS2015 | ----- | ----- | 350 |
| | 2 X 2″ | IS2020 | IS2020 | ----- | ----- | 300 |
| | 2 X 3″ | IS2030 | IS2030 | ----- | ----- | 200 |
| | 3 X 1 1/2″ | IS3015 | IS3015 | ----- | ----- | 225 |
| | 3 X 2″ | IS3020 | IS3020 | ----- | ----- | 200 |
| | 3 X 3″ | IS3030 | IS3030 | ----- | ----- | 125 |
| | 4 X 1 ″ | IS4010 | IS4010 | ----- | ----- | 200 |
| | 4 X 1 1/2″ | IS4015 | IS4015 | ----- | ----- | 150 |
| | 4 X 2″ | IS4020 | IS4020 | ----- | ----- | 125 |
| | 4 X 3″ | IS4030 | IS4030 | ----- | ----- | 90 |
| | 5 X 1 1/2″ | IS5015 | IS5015 | ----- | ----- | 100 |
| | 5 X 2″ | IS5020 | IS5020 | ----- | ----- | 100 |
| | 5 X 3″ | IS5030 | IS5030 | ----- | ----- | 80 |
| | 6 X 1 1/2″ | IS6015 | IS6015 | ----- | ----- | 100 |
| | 6 X 2″ | IS6020 | IS6020 | ----- | ----- | 90 |
| | 6 X 3″ | IS6030 | IS6030 | ----- | ----- | 70 |
| | 8 X 1 1/2″ | IS8015 | ----- | ----- | ----- | 60 |
| | 8 X 2″ | IS8020 | ----- | ----- | ----- | 60 |

# Rigid PVC Conduit Fittings

| Item | Size in Inches | Part Number | Reference Royal | Reference CANTEX | Reference Thomas & Betts - Carlon | Carton Qty |
|---|---|---|---|---|---|---|
| **DUCT - BASE VERTICAL LOCK SPACER** | | | | | | |
|  | 2 X 1 1/2" | BS2015 | BS2015 | ----- | ----- | 250 |
| | 2 X 2" | BS2020 | BS2020 | ----- | ----- | 225 |
| | 2 X 3" | BS2030 | BS2030 | ----- | ----- | 225 |
| | 3 X 1 1/2" | BS3015 | BS3015 | ----- | ----- | 175 |
| | 3 X 2" | BS3020 | BS3020 | ----- | ----- | 155 |
| | 3 X 3" | BS3030 | BS3030 | ----- | ----- | 150 |
| | 4 X 1 " | BS4010 | BS4010 | ----- | ----- | 175 |
| | 4 X 1 1/2" | BS4015 | BS4015 | ----- | ----- | 140 |
| | 4 X 2" | BS4020 | BS4020 | ----- | ----- | 140 |
| | 4 X 3" | BS4030 | BS4030 | ----- | ----- | 120 |
| | 5 X 1 1/2" | BS5015 | BS5015 | ----- | ----- | 120 |
| | 5 X 2" | BS5020 | BS5020 | ----- | ----- | 120 |
| | 5 X 3" | BS5030 | BS5030 | ----- | ----- | 100 |
| | 6 X 1 1/2" | BS6015 | BS6015 | ----- | ----- | 100 |
| | 6 X 2" | BS6020 | BS6020 | ----- | ----- | 100 |
| | 6 X 3" | BS6030 | BS6030 | ----- | ----- | 95 |
| | 8 X 1 1/2" | BS8015 | ----- | ----- | ----- | 50 |
| | 8 X 2" | BS8020 | ----- | ----- | ----- | 50 |
| **UNIVERSAL PLUG W/PULLING EYE** | | | | | | |
|  | 2" | E091200 | PLUG02 | 5315258 | P258JT | 70 |
| | 3" | E091300 | PLUG03 | 5315260 | P258LT | 45 |
| | 4" | E091400 | PLUG04 | 5315262 | P258NT | 80 |
| | 5" | E091500 | PLUG05 | 5315263 | P258PT | 45 |
| | 6" | E091600 | PLUG06 | 5315264 | P258RT | 35 |
| **ECOVOC LOW VOC / CLEAR CEMENT** | | | | | | |
|   | PINT | RVOC475 | RVOC475 | 7210612 | VC9963 | 12 |
| | QUART | RVOC950ML | RVOC950ML | 7210613 | VC9962 | 12 |

# Rigid PVC Conduit Fittings

| Item | Size in Inches | Part Number | Reference Royal | Reference CANTEX | Reference Thomas & Betts - Carlon | Carton Qty |
|---|---|---|---|---|---|---|
| **VINYL SIDING ELECTRICAL MOUNT** | | | | | | |
|  | 7 1/2" X 7 1/2" | 10000 | ----- | ----- | ----- | 10 |
| | 7 5/8" X 12" | 41000 | ----- | ----- | ----- | 10 |
| | 7 1/2" X 7 3/4" | 13000 | ----- | ----- | ----- | 10 |
| | 6" X 4 1/2" | 43000 | ----- | ----- | ----- | 10 |
| | 5 1/2" X 7 6/16" | 44000 | ----- | ----- | ----- | 10 |
| | 14 1/2" X 19" | 42000 | ----- | ----- | ----- | 1 |
| | 7" X 7" | 17000 | ----- | ----- | ----- | 10 |
| **SCH 40 STANDARD ELBOWS - 90° ELBOW - PLAIN END** | | | | | | |
|  | 1/2" | E018050 | REE1090PE | 5133823 | UA9AD | 50 |
| | 3/4" | E018075 | REE1590PE | 5133824 | UA9AE | 35 |
| | 1" | E018100 | REE2090PE | 5133825 | UA9AF | 20 |
| | 1 1/4" | E018125 | REE2590PE | 5133826 | UA9AG | 30 |
| | 1 1/2" | E018150 | REE3090PE | 5133827 | UA9AH | 30 |
| | 2" | E018200 | REE3590PE | 5133828 | UA9AJ | 15 |
| | 2 1/2" | E018250 | REE4090PE | 5133829 | UA9AK CAR | 18 |
| | 3" | E018300 | REE4590PE | 5133830 | UA9AL | 14 |
| | 3 1/2" | E018350 | REE5090PE | 5133831 | UA9AM | 12 |
| | 4" | E018400 | REE5590PE | 5133832 | UA9AN | 10 |
| | 5" | E018500 | REE6090PE | 5133835 | UA9AP | 1 |
| | 6" | E018600 | REE6590PE | 5133834 | UA9AR | 1 |
| **SCH 40 STANDARD ELBOWS - 45° ELBOW - PLAIN END** | | | | | | |
|  | 1/2" | E019050 | REE1045PE | 5133763 | UA7AD | 50 |
| | 3/4" | E019075 | REE1545PE | 5133764 | UA7AE | 25 |
| | 1" | E019100 | REE2045PE | 5133765 | UA7AF | 20 |
| | 1 1/4" | E019125 | REE2545PE | 5133766 | UA7AG | 25 |
| | 1 1/2" | E019150 | REE3045PE | 5133767 | UA7AH | 20 |
| | 2" | E019200 | REE3545PE | 5133768 | UA7AJ | 10 |
| | 2 1/2" | E019250 | REE4045PE | 5133769 | UA7AK | 20 |
| | 3" | E019300 | REE4545PE | 5133770 | UA7AL CAR | 8 |
| | 3 1/2" | E019350 | REE5045PE | 5133771 | UA7AM | 5 |
| | 4" | E019400 | REE5545PE | 5133772 | UA7AN | 20 |
| | 5" | E019500 | REE6045PE | 5133773 | UA7AP | 1 |
| | 6" | E019600 | REE6545PE | 5133774 | UA7AR | 1 |

# Rigid PVC Conduit Fittings

| Item | Size in Inches | Part Number | Reference Royal | Reference CANTEX | Reference Thomas & Betts - Carlon | Carton Qty |
|---|---|---|---|---|---|---|
| **SCH 40 STANDARD ELBOWS - 30° ELBOW - PLAIN END** | | | | | | |
|  | 1/2″ | E020050 | REE1030PE | 5133755 | UA6AD | 50 |
| | 3/4″ | E020075 | REE1530PE | 5133744 | UA6AE | 25 |
| | 1″ | E020100 | REE2030PE | 5133745 | UA6AF | 20 |
| | 1 1/4″ | E020125 | REE2530PE | 5133746 | UA6AG | 25 |
| | 1 1/2″ | E020150 | REE3030PE | 5133747 | UA6AH | 50 |
| | 2″ | E020200 | REE3530PE | 5133748 | UA6AJ | 10 |
| | 2 1/2″ | E020250 | REE4030PE | 5133749 | UA6AK | 20 |
| | 3″ | E020300 | REE4530PE | 5133750 | UA6AL | 8 |
| | 3 1/2″ | E020350 | REE5030PE | 5133751 | UA6AM | 5 |
| | 4″ | E020400 | REE5530PE | 5133775 | UA6AN | 20 |
| | 5″ | E020500 | REE6030PE | 5133753 | UA6AP | 1 |
| | 6″ | E020600 | REE6530PE | 5133754 | UA6AR | 1 |
| **SCH 40 STANDARD ELBOWS - 22 1/2° ELBOW - PLAIN END** | | | | | | |
|  | 1 1/2″ | E084150 | ----- | 5134094 | UA5AH | 20 |
| | 2″ | E084200 | ----- | 5134067 | UA5AJ | 10 |
| | 2 1/2″ | E084250 | ----- | 5134096 | UA5AK | 20 |
| | 3″ | E084300 | ----- | 5134068 | UA5AL | 8 |
| | 3 1/2″ | E084350 | ----- | 5134095 | UA5AM | 5 |
| | 4″ | E084400 | ----- | 5133757 | UA5AN | 20 |
| | 5″ | E084500 | ----- | 5134037 | UA5AP | 1 |
| | 6″ | E084600 | ----- | 5133901 | UA5AR | 1 |
| **SCH 40 STANDARD ELBOWS - 11 1/4° ELBOW - PLAIN END** | | | | | | |
|  | 2″ | E087200 | ----- | ----- | UA3AJ | 1 |
| | 3″ | E087300 | ----- | ----- | UA3AL | 1 |
| | 4″ | E087400 | ----- | ----- | UA3AN | 1 |
| | 5″ | E087500 | ----- | ----- | UA3AP | 1 |

# Rigid PVC Conduit Fittings

| Item | Size in Inches | Part Number | Reference Royal | Reference CANTEX | Reference Thomas & Betts - Carlon | Carton Qty |
|---|---|---|---|---|---|---|
| SCH 40 STANDARD ELBOWS - 90° ELBOW - BELL END | | | | | | |
|  | 1/2″ | E021050 | REE1090 | 5233823 | UA9ADB | 50 |
| | 3/4″ | E021075 | REE1590 | 5233824 | UA9AEB | 35 |
| | 1″ | E021100 | REE2090 | 5233825 | UA9AFB | 20 |
| | 1 1/4″ | E021125 | REE2590 | 5233826 | UA9AGB | 30 |
| | 1 1/2″ | E021150 | REE3090 | 5233827 | UA9AHB | 30 |
| | 2″ | E021200 | REE3590 | 5233828 | UA9AJB | 15 |
| | 2 1/2″ | E021250 | REE4090 | 5233829 | UA9AKB CAR | 18 |
| | 3″ | E021300 | REE4590 | 5233830 | UA9ALB CAR | 14 |
| | 3 1/2″ | E021350 | REE5090 | 5233831 | UA9AMB | 12 |
| | 4″ | E021400 | REE5590 | 5233832 | UA9ANB | 10 |
| | 5″ | E021500 | REE6090 | 5233835 | UA9APB | 1 |
| | 6″ | E021600 | REE6590 | 5233834 | UA9ARB | 1 |
| SCH 40 STANDARD ELBOWS - 45° ELBOW - BELL EN | | | | | | |
|  | 1/2″ | E022050 | REE1045 | 5233763 | UA7ADB | 50 |
| | 3/4″ | E022075 | REE1545 | 5233764 | UA7AEB | 25 |
| | 1″ | E022100 | REE2045 | 5233765 | UA7AFB | 20 |
| | 1 1/4″ | E022125 | REE2545 | 5233766 | UA7AGB | 25 |
| | 1 1/2″ | E022150 | REE3045 | 5233767 | UA7AHB | 20 |
| | 2″ | E022200 | REE3545 | 5233768 | UA7AJB | 10 |
| | 2 1/2″ | E022250 | REE4045 | 5233769 | UA7AKB | 20 |
| | 3″ | E022300 | REE4545 | 5233770 | UA7ALB | 8 |
| | 3 1/2″ | E022350 | REE5045 | 5233771 | UA7AMB | 5 |
| | 4″ | E022400 | REE5545 | 5233772 | UA7ANB | 20 |
| | 5″ | E022500 | REE6045 | 5233773 | UA7APB | 1 |
| | 6″ | E022600 | REE6545 | 5233774 | UA7ARB | 1 |
| SCH 40 STANDARD ELBOWS - 30° ELBOW - BELL END | | | | | | |
|  | 1/2″ | E072050 | REE1030 | | UA6ADB | 50 |
| | 3/4″ | E072075 | REE1530 | | UA6AEB | 35 |
| | 1″ | E072100 | REE2030 | | UA6AFB | 50 |
| | 1 1/4″ | E072125 | REE2530 | | UA6AGB | 30 |
| | 1 1/2″ | E072150 | REE3030 | | UA6AHB | 50 |
| | 2″ | E072200 | REE3530 | 5233748 | UA6AJB | 10 |
| | 2 1/2″ | E072250 | REE4030 | | UA6AKB | 10 |
| | 3″ | E072300 | REE4530 | 5233750 | UA6ALB | 8 |
| | 3 1/2″ | E072350 | REE5030 | 5233751 | UA6AMB | 5 |
| | 4″ | E072400 | REE5530 | 5233776 | UA6ANB | 20 |
| | 5″ | E072500 | REE6030 | 5233753 | UA6APB | 1 |
| | 6″ | E072600 | REE6530 | 5233754 | UA6ARB | 1 |

# Rigid PVC Conduit Fittings

| Item | Size in Inches | Part Number | Reference Royal | Reference CANTEX | Reference Thomas & Betts - Carlon | Carton Qty |
|---|---|---|---|---|---|---|
| **SCH 80 STANDARD ELBOWS - SCH80 90° ELBOW - PLAIN END** | | | | | | |
|  | 1/2″ | E085050 | ----- | 5121053 | UB9AD | 50 |
| | 3/4″ | E085075 | ----- | 5121054 | UB9AE | 35 |
| | 1″ | E085100 | ----- | 5121055 | UB9AF | 20 |
| | 1 1/4″ | E085125 | ----- | 5121056 | UB9AG | 30 |
| | 1 1/2″ | E085150 | ----- | 5121057 | UB9AH | 30 |
| | 2″ | E085200 | ----- | 5121058 | UB9AJ | 15 |
| | 2 1/2″ | E085250 | ----- | 5121059 | UB9AK CAR | 18 |
| | 3″ | E085300 | ----- | 5121060 | UB9AL CAR | 14 |
| | 4″ | E085400 | ----- | 5121061 | UB9AN | 10 |
| | 5″ | E085500 | ----- | 5121062 | UB9AP | 1 |
| | 6″ | E085600 | ----- | 5121063 | UB9AR | 1 |
| **SCH 80 STANDARD ELBOWS - SCH80 45° ELBOW - PLAIN END** | | | | | | |
|  | 1/2″ | E086050 | ----- | 5121003 | UB7AD | 50 |
| | 3/4″ | E086075 | ----- | 5121004 | UB7AE UPC | 25 |
| | 1″ | E086100 | ----- | 5121005 | UB7AF UPC | 20 |
| | 1 1/4″ | E086125 | ----- | 5121006 | UB7AG | 25 |
| | 1 1/2″ | E086150 | ----- | 5121007 | UB7AH | 20 |
| | 2″ | E086200 | ----- | 5121008 | UB7AJ UPC | 10 |
| | 2 1/2″ | E086250 | ----- | 5121009 | UB7AK | 20 |
| | 3″ | E086300 | ----- | 5121010 | UB7AL | 8 |
| | 4″ | E086400 | ----- | 5121011 | UB7AN | 20 |
| | 5″ | E086500 | ----- | 5121012 | UB7AP | 1 |
| | 6″ | E086600 | ----- | 5121013 | UB7AR | 1 |
| **SCH. 40 SPECIAL RADIUS ELBOW PLAIN END - 90° 24″ RADIUS** | | | | | | |
|  | 1″ | E07510024 | ----- | 5133859 | UA9DF | 1 |
| | 1 1/4″ | E07512524 | ----- | 5133883 | UA9DG | 1 |
| | 1 1/2″ | E07515024 | ----- | 5133873 | UA9DH | 1 |
| | 2″ | E07520024 | ----- | 5133836 | UA9DJ | 1 |
| | 2 1/2″ | E07525024 | ----- | 5133847 | UA9DK | 1 |
| | 3″ | E07530024 | ----- | 5133837 | UA9DL | 1 |
| | 3 1/2″ | E07535024 | ----- | 5133893 | UA9DM | 1 |
| | 4″ | E07540024 | ----- | 5133822 | UA9DN | 1 |
| | 5″ | E07550024 | ----- | ----- | ----- | 1 |
| | 6″ | E07560024 | ----- | ----- | ----- | 1 |

# Rigid PVC Conduit Fittings

| Item | Size in Inches | Part Number | Reference Royal | Reference CANTEX | Reference Thomas & Betts - Carlon | Carton Qty |
|---|---|---|---|---|---|---|
| **SCH. 40 SPECIAL RADIUS ELBOW PLAIN END - 90° 36" RADIUS** | | | | | | |
|  | 1" | E07510036 | ----- | 5133852 | UA9FF | 1 |
| | 1 1/4" | E07512536 | ----- | 5133884 | UA9FG | 1 |
| | 1 1/2" | E07515036 | ----- | 5133866 | UA9FH | 1 |
| | 2" | E07520036 | ----- | 5133848 | UA9FJ UPC | 1 |
| | 2 1/2" | E07525036 | ----- | 5133857 | UA9FK UPC | 1 |
| | 3" | E07530036 | ----- | 5133820 | UA9FL | 1 |
| | 3 1/2" | E07535036 | ----- | 5133818 | UA9FM | 1 |
| | 4" | E07540036 | ----- | 5133821 | UA9FN | 1 |
| | 5" | E07550036 | ----- | 5133841 | UA9FP | 1 |
| | 6" | E07560036 | ----- | 5133877 | UA9FR | 1 |
| **SCH. 40 SPECIAL RADIUS ELBOW PLAIN END - 90° 48" RADIUS** | | | | | | |
|  | 1" | E07510048 | ----- | 5133864 | UA9HF | 1 |
| | 1 1/4" | E07512548 | ----- | 5133871 | UA9HG | 1 |
| | 1 1/2" | E07515048 | ----- | 5133865 | UA9HH | 1 |
| | 2" | E07520048 | ----- | 5133876 | UA9HJ | 1 |
| | 2 1/2" | E07525048 | ----- | 5133849 | UA9HK | 1 |
| | 3" | E07530048 | ----- | 5133817 | UA9HL | 1 |
| | 3 1/2" | E07535048 | ----- | 5133892 | UA9HM | 1 |
| | 4" | E07540048 | ----- | 5133843 | UA9HN | 1 |
| | 5" | E07550048 | ----- | 5133842 | UA9HP | 1 |
| | 6" | E07560048 | ----- | 5133816 | UA9HR | 1 |
| **SCH. 40 SPECIAL RADIUS ELBOW PLAIN END - 45° 24" RADIUS** | | | | | | |
|  | 1" | E07610024 | ----- | 5133875 | UA7DF | 1 |
| | 1 1/4" | E07612524 | ----- | 5133941 | UA7DG | 1 |
| | 1 1/2" | E07615024 | ----- | 5133874 | UA7DH | 1 |
| | 2" | E07620024 | ----- | 5133815 | UA7DJ | 1 |
| | 2 1/2" | E07625024 | ----- | 5133935 | UA7DK | 1 |
| | 3" | E07630024 | ----- | 5133800 | UA7DL | 1 |
| | 3 1/2" | E07635024 | ----- | 5133802 | UA7DM | 1 |
| | 4" | E07640024 | ----- | 5133812 | UA7DN | 1 |
| | 5" | E07650024 | ----- | ----- | ----- | 1 |
| | 6" | E07660024 | ----- | ----- | ----- | 1 |

# Rigid PVC Conduit Fittings

| Item | Size in Inches | Part Number | Reference Royal | Reference CANTEX | Reference Thomas & Betts - Carlon | Carton Qty |
|---|---|---|---|---|---|---|
| **SCH. 40 SPECIAL RADIUS ELBOW PLAIN END - 45° 36" RADIUS** | | | | | | |
|  | 1" | E07610036 | ------ | 5133919 | UA7FF | 1 |
| | 1 1/4" | E07612536 | ------ | 5133956 | UA7FG | 1 |
| | 1 1/2" | E07615036 | ------ | 5133810 | UA7FH | 1 |
| | 2" | E07620036 | ------ | 5133778 | UA7FJ | 1 |
| | 2 1/2" | E07625036 | ------ | 5133801 | UA7FK | 1 |
| | 3" | E07630036 | ------ | 5133779 | UA7FL | 1 |
| | 3 1/2" | E07635036 | ------ | 5133939 | UA7FM | 1 |
| | 4" | E07640036 | ------ | 5133777 | UA7FN | 1 |
| | 5" | E07650036 | ------ | 5133780 | UA7FP | 1 |
| | 6" | E07660036 | ------ | 5133880 | UA7FR | 1 |
| **SCH. 40 SPECIAL RADIUS ELBOW PLAIN END - 45° 48" RADIUS** | | | | | | |
|  | 1" | E07610048 | ------ | 5133940 | UA7HF | 1 |
| | 1 1/4" | E07612548 | ------ | 5133942 | UA7HG | 1 |
| | 1 1/2" | E07615048 | ------ | 5133811 | UA7HH | 1 |
| | 2" | E07620048 | ------ | 5133798 | UA7HJ | 1 |
| | 2 1/2" | E07625048 | ------ | 5134010 | UA7HK | 1 |
| | 3" | E07630048 | ------ | 5133781 | ------ | 1 |
| | 3 1/2" | E07635048 | ------ | 5133979 | ------ | 1 |
| | 4" | E07640048 | ------ | 5133776 | UA7HN | 1 |
| | 5" | E07650048 | ------ | 5133814 | UA7HP | 1 |
| | 6" | E07660048 | ------ | 5133813 | UA7HR | 1 |
| **SCH. 40 SPECIAL RADIUS ELBOW BELLED - 90° 24" RADIUS** | | | | | | |
|  | 2" | E07920024 | ------ | 5133924 | UA9DJB UPC | 1 |
| | 2 1/2" | E07925024 | ------ | 5233847 | UA9DKB UPC | 1 |
| | 3" | E07930024 | ------ | 5233837 | UA9DLB UPC | 1 |
| | 3 1/2" | E07935024 | ------ | 5233893 | UA9DMB | 1 |
| | 4" | E07940024 | ------ | 5233822 | UA9DNB | 1 |
| **SCH. 40 SPECIAL RADIUS ELBOW BELLED - 90° 36" RADIUS** | | | | | | |
|  | 2" | E07920036 | ------ | 5233848 | UA9FJB | 1 |
| | 2 1/2" | E07925036 | ------ | 5233857 | UA9FKB | 1 |
| | 3" | E07930036 | ------ | 5233930 | UA9FLB | 1 |
| | 3 1/2" | E07935036 | ------ | 5233818 | UA9FMB | 1 |
| | 4" | E07940036 | ------ | 5233842 | UA9FNB | 1 |
| | 5" | E07950036 | ------ | 5233841 | UA9FPB | 1 |
| | 6" | E07960036 | ------ | 5233877 | UA9FRB | 1 |

# Rigid PVC Conduit Fittings

| Item | Size in Inches | Part Number | Reference Royal | Reference CANTEX | Reference Thomas & Betts - Carlon | Carton Qty |
|---|---|---|---|---|---|---|
| **SCH. 40 SPECIAL RADIUS ELBOW BELLED - 90° 48" RADIUS** | | | | | | |
|  | 2" | E07920048 | ----- | 5233876 | UA9HJB | 1 |
| | 2 1/2" | E07925048 | ----- | 5233849 | UA9HKB | 1 |
| | 3" | E07930048 | ----- | 5233817 | UA9HLB | 1 |
| | 3 1/2" | E07935048 | ----- | 5233892 | ----- | 1 |
| | 4" | E07940048 | ----- | 5233843 | UA9HNB | 1 |
| | 5" | E07950048 | ----- | 5233868 | UA9HPB | 1 |
| | 6" | E07960048 | ----- | 5233816 | UA9HRB | 1 |
| **SCH. 40 SPECIAL RADIUS ELBOW BELLED - 45° 24" RADIUS** | | | | | | |
|  | 2" | E08020024 | ----- | 5233815 | UA7DJB | 1 |
| | 2 1/2" | E08025024 | ----- | 5233935 | UA7DKB | 1 |
| | 3" | E08030024 | ----- | 5233800 | UA7DLB | 1 |
| | 3 1/2" | E08035024 | ----- | 5233802 | ----- | 1 |
| | 4" | E08040024 | ----- | 5233812 | UA7DNB | 1 |
| **SCH. 40 SPECIAL RADIUS ELBOW BELLED - 45° 36" RADIUS** | | | | | | |
|  | 2" | E08020036 | ----- | 5233778 | UA7FJB | 1 |
| | 2 1/2" | E08025036 | ----- | 5233801 | UA7FKB | 1 |
| | 3" | E08030036 | ----- | 5233779 | UA7FLB | 1 |
| | 3 1/2" | E08035036 | ----- | 5233939 | ----- | 1 |
| | 4" | E08040036 | ----- | 5233777 | UA7FNB | 1 |
| | 5" | E08050036 | ----- | 5233780 | UA7FPB | 1 |
| | 6" | E08060036 | ----- | 5133894 | UA7FRB | 1 |
| **SCH. 40 SPECIAL RADIUS ELBOW BELLED - 45° 48" RADIUS** | | | | | | |
| 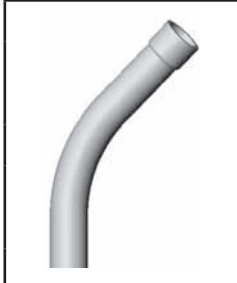 | 2" | E08020048 | ----- | 5133759 | UA7HJB | 1 |
| | 2 1/2" | E08025048 | ----- | 5233785 | ----- | 1 |
| | 3" | E08030048 | ----- | 5233782 | UA7HLB | 1 |
| | 3 1/2" | E08035048 | ----- | 5233943 | ----- | 1 |
| | 4" | E08040048 | ----- | 5133761 | UA7HNB | 1 |
| | 5" | E08050048 | ----- | 5233781 | UA7HPB | 1 |
| | 6" | E08060048 | ----- | 5233813 | UA7HRB | 1 |
| **SCH. 80 SPECIAL RADIUS ELBOW PLAIN END - 90° 24" RADIUS** | | | | | | |
|  | 1" | E07710024 | ----- | 5121018 | UB9DF | 1 |
| | 1 1/4" | E07712524 | ----- | 5119824 | UB9DG | 1 |
| | 1 1/2" | E07715024 | ----- | 5121015 | UB0DH UPC | 1 |
| | 2" | E07720024 | ----- | 5121019 | UB9DJ UPC | 1 |
| | 2 1/2" | E07725024 | ----- | 5121028 | UB9DK UPC | 1 |
| | 3" | E07730024 | ----- | 5121020 | UB9DL | 1 |
| | 4" | E07740024 | ----- | 5121022 | UB9DN | 1 |

# Rigid PVC Conduit Fittings

| Item | Size in Inches | Part Number | Reference Royal | Reference CANTEX | Reference Thomas & Betts - Carlon | Carton Qty |
|---|---|---|---|---|---|---|
| **SCH. 80 SPECIAL RADIUS ELBOW PLAIN END - 90° 36" RADIUS** | | | | | | |
|  | 1" | E07710036 | | 5121080 | UB9FF | 1 |
| | 1 1/4" | E07712536 | | 5121084 | UB9FG | 1 |
| | 1 1/2" | E07715036 | | 5121100 | UB9FH | 1 |
| | 2" | E07720036 | | 5121021 | UB9FJ | 1 |
| | 2 1/2" | E07725036 | | 5121016 | UB9FK | 1 |
| | 3" | E07730036 | | 5121081 | UB9FL | 1 |
| | 4" | E07740036 | | 5121023 | UB9FN | 1 |
| | 5" | E07750036 | | 5121083 | UB9FP | 1 |
| | 6" | E07760036 | | 5121073 | UB9FR | 1 |
| **SCH. 80 SPECIAL RADIUS ELBOW PLAIN END - 90° 48" RADIUS** | | | | | | |
|  | 1" | E07710048 | | 5121065 | UB9HF | 1 |
| | 1 1/4" | E07712548 | | 5136510 | UB9HG | 1 |
| | 1 1/2" | E07715048 | | 5121076 | UB9HH | 1 |
| | 2" | E07720048 | | 5121075 | UB9HJ | 1 |
| | 2 1/2" | E07725048 | | 5121030 | UB9HK | 1 |
| | 3" | E07730048 | | 5121082 | UB9HL | 1 |
| | 4" | E07740048 | | 5121024 | UB9HN | 1 |
| | 5" | E07750048 | | 5121025 | UB9HP | 1 |
| **SCH. 80 SPECIAL RADIUS ELBOW PLAIN END** | | | | | | |
|  | 1" | E07810024 | | 5136500 | UB7DF | 1 |
| | 1 1/4" | E07812524 | | 5136512 | UB7DG | 1 |
| | 1 1/2" | E07815024 | | 5163533 | UB7DH | 1 |
| | 2" | E07820024 | | 5121101 | UB7DJ | 1 |
| | 2 1/2" | E07825024 | | 5121943 | UB7DK | 1 |
| | 3" | E07830024 | | 5121014 | UB7DL | 1 |
| | 4" | E07840024 | | 5121089 | UB7DN | 1 |
| **SCH. 80 SPECIAL RADIUS ELBOW PLAIN END** | | | | | | |
|  | 1" | E07810036 | | 5136502 | | 1 |
| | 1 1/4" | E07812536 | | 5136514 | UB7FG | 1 |
| | 1 1/2" | E07815036 | | 5136533 | UB7FH | 1 |
| | 2" | E07820036 | | 5121098 | UB7FJ | 1 |
| | 2 1/2" | E07825036 | | 5121150 | UB7FK | 1 |
| | 3" | E07830036 | | 5121077 | UB7FL | 1 |
| | 4" | E07840036 | | 5119821 | UB7FN | 1 |
| | 5" | E07850036 | | 5119820 | UB7FP | 1 |
| | 6" | E07860036 | | 5121072 | UB7FR | 1 |

# Rigid PVC Conduit Fittings

| Item | Size in Inches | Part Number | Reference Royal | Reference CANTEX | Reference Thomas & Betts - Carlon | Carton Qty |
|---|---|---|---|---|---|---|
| **SCH. 80 SPECIAL RADIUS ELBOW PLAIN END - 45° 48" RADIUS** | | | | | | |
|  | 1" | E07810048 | ----- | 5136503 | UB7HF | 1 |
| | 1 1/4" | E07812548 | ----- | 5136515 | UB7HG | 1 |
| | 1 1/2" | E07815048 | ----- | 5136534 | ----- | 1 |
| | 2" | E07820048 | ----- | 5121093 | UB7HJ | 1 |
| | 2 1/2" | E07825048 | ----- | 5136563 | ----- | 1 |
| | 3" | E07830048 | ----- | 5121078 | UB7HL | 1 |
| | 4" | E07840048 | ----- | 5121091 | UB7HN | 1 |
| | 5" | E07850048 | ----- | 5121948 | UB7HP | 1 |
| **SCH. 80 SPECIAL RADIUS ELBOW BELLED - 90° 24" RADIUS** | | | | | | |
|  | 1" | E08210024 | ----- | ----- | ----- | 1 |
| | 1 1/4" | E08212524 | ----- | ----- | ----- | 1 |
| | 1 1/2" | E08215024 | ----- | ----- | ----- | 1 |
| | 2" | E08220024 | ----- | ----- | UB9DJB | 1 |
| | 2 1/2" | E08225024 | ----- | ----- | UB9DKB | 1 |
| | 3" | E08230024 | ----- | ----- | UB9DLB | 1 |
| | 4" | E08240024 | ----- | ----- | ----- | 1 |
| **SCH. 80 SPECIAL RADIUS ELBOW BELLED - 90° 36" RADIUS** | | | | | | |
|  | 1" | E08210036 | ----- | ----- | ----- | 1 |
| | 1 1/4" | E08212536 | ----- | ----- | ----- | 1 |
| | 1 1/2" | E08215036 | ----- | ----- | ----- | 1 |
| | 2" | E08220036 | ----- | ----- | ----- | 1 |
| | 2 1/2" | E08225036 | ----- | ----- | UB9FKB | 1 |
| | 3" | E08230036 | ----- | ----- | UB9FLB | 1 |
| | 4" | E08240036 | ----- | ----- | UB9FNB | 1 |
| | 5" | E08250036 | ----- | ----- | ----- | 1 |
| | 6" | E08260036 | ----- | ----- | ----- | 1 |
| **SCH. 80 SPECIAL RADIUS ELBOW BELLED - 90° 48" RADIUS** | | | | | | |
|  | 1" | E08210048 | ----- | ----- | ----- | 1 |
| | 1 1/4" | E08212548 | ----- | ----- | ----- | 1 |
| | 1 1/2" | E08215048 | ----- | ----- | ----- | 1 |
| | 2" | E08220048 | ----- | ----- | ----- | 1 |
| | 2 1/2" | E08225048 | ----- | ----- | ----- | 1 |
| | 3" | E08230048 | ----- | ----- | ----- | 1 |
| | 4" | E08240048 | ----- | ----- | UB9HNB | 1 |
| | 5" | E08250048 | ----- | ----- | ----- | 1 |

# Rigid PVC Conduit Fittings

| Item | Size in Inches | Part Number | Reference Royal | Reference CANTEX | Reference Thomas & Betts - Carlon | Carton Qty |
|---|---|---|---|---|---|---|
| SCH. 80 SPECIAL RADIUS ELBOW BELLED - 45° 24" RADIUS | | | | | | |
|  | 1" | E08310024 | ----- | ----- | ----- | 1 |
| | 1 1/4" | E08312524 | ----- | ----- | ----- | 1 |
| | 1 1/2" | E08315024 | ----- | ----- | ----- | 1 |
| | 2" | E08320024 | ----- | ----- | ----- | 1 |
| | 2 1/2" | E08325024 | ----- | ----- | ----- | 1 |
| | 3" | E08330024 | ----- | ----- | ----- | 1 |
| | 4" | E08340024 | ----- | ----- | ----- | 1 |
| SCH. 80 SPECIAL RADIUS ELBOW BELLED - 45° 36" RADIUS | | | | | | |
|  | 1" | E08310036 | ----- | ----- | ----- | 1 |
| | 1 1/4" | E08312536 | ----- | ----- | ----- | 1 |
| | 1 1/2" | E08315036 | ----- | ----- | ----- | 1 |
| | 2" | E08320036 | ----- | ----- | ----- | 1 |
| | 2 1/2" | E08325036 | ----- | ----- | ----- | 1 |
| | 3" | E08330036 | ----- | ----- | ----- | 1 |
| | 4" | E08340036 | ----- | ----- | ----- | 1 |
| | 5" | E08350036 | ----- | ----- | ----- | 1 |
| | 6" | E08360036 | ----- | ----- | ----- | 1 |
| SCH. 80 SPECIAL RADIUS ELBOW BELLED - 45° 48" RADIUS | | | | | | |
|  | 1" | E08310048 | ----- | ----- | ----- | 1 |
| | 1 1/4" | E08312548 | ----- | ----- | ----- | 1 |
| | 1 1/2" | E08315048 | ----- | ----- | ----- | 1 |
| | 2" | E08320048 | ----- | ----- | ----- | 1 |
| | 2 1/2" | E08325048 | ----- | ----- | ----- | 1 |
| | 3" | E08330048 | ----- | ----- | ----- | 1 |
| | 4" | E08340048 | ----- | ----- | ----- | 1 |
| | 5" | E08350048 | ----- | ----- | ----- | 1 |

# Rigid PVC Conduit Fittings

## With Brass Fasteners

| Item | Size in Inches | Part Number | Reference Royal | Reference CANTEX | Reference Thomas & Betts - Carlon | Carton Qty |
|---|---|---|---|---|---|---|
| **BRASS FASTENER PRODUCTS - ACCESS FITTING - TYPE LB** | | | | | | |
|  | 1/2″ | E533050 | RSLB10S | ----- | ----- | 25 |
| | 3/4″ | E533075 | RSLB20S | ----- | ----- | 25 |
| | 1″ | E533100 | RSLB30S | ----- | ----- | 15 |
| | 1 1/4″ | E533125 | RSLB40S | ----- | ----- | 20 |
| | 1 1/2″ | E533150 | RSLB50S | ----- | ----- | 10 |
| | 2″ | E533200 | RSLB60S | ----- | ----- | 15 |
| | 2 1/2″ | E533250 | RSLB70S | ----- | ----- | 5 |
| | 3″ | E533300 | RSLB80S | ----- | ----- | 5 |
| | 3 1/2″ | E533350 | RSLB90S | ----- | ----- | 5 |
| | 4″ | E533400 | RSLB100S | ----- | ----- | 5 |
| **BRASS FASTENER PRODUCTS - ACCESS FITTING - TYPE C** | | | | | | |
|  | 1/2″ | E532050 | RSC10S | ----- | ----- | 30 |
| | 3/4″ | E532075 | RSC20S | ----- | ----- | 20 |
| | 1″ | E532100 | RSC30S | ----- | ----- | 15 |
| | 1 1/4″ | E532125 | RSC40S | ----- | ----- | 15 |
| | 1 1/2″ | E532150 | RSC50S | ----- | ----- | 10 |
| | 2″ | E532200 | RSC60S | ----- | ----- | 15 |
| | 2 1/2″ | E532250 | RSC70S | ----- | ----- | 4 |
| | 3″ | E532300 | RSC80S | ----- | ----- | 4 |
| | 3 1/2″ | E532350 | RSC90S | ----- | ----- | 4 |
| | 4″ | E532400 | RSC100S | ----- | ----- | 4 |
| **BRASS FASTENER PRODUCTS - ACCESS FITTING - TYPE LL** | | | | | | |
|  | 1/2″ | E534050 | RSLL10S | ----- | ----- | 25 |
| | 3/4″ | E534075 | RSLL20S | ----- | ----- | 20 |
| | 1″ | E534100 | RSLL30S | ----- | ----- | 15 |
| | 1 1/4″ | E534125 | RSLL40S | ----- | ----- | 10 |
| | 1 1/2″ | E534150 | RSLL50S | ----- | ----- | 10 |
| | 2″ | E534200 | RSLL60S | ----- | ----- | 10 |
| | 2 1/2″ | E534250 | RSLL70S | ----- | ----- | 4 |
| | 3″ | E534300 | RSLL80S | ----- | ----- | 4 |
| | 3 1/2″ | E534350 | RSLL90S | ----- | ----- | 5 |
| | 4″ | E534400 | RSLL100S | ----- | ----- | 5 |

# Rigid PVC Conduit Fittings

## With Brass Fasteners

| Item | Size in Inches | Part Number | Reference Royal | Reference CANTEX | Reference Thomas & Betts - Carlon | Carton Qty |
|---|---|---|---|---|---|---|
| **BRASS FASTENER PRODUCTS - ACCESS FITTING - TYPE LR** | | | | | | |
|  | 1/2″ | E535050 | RSLR10S | ----- | ----- | 25 |
| | 3/4″ | E535075 | RSLR20S | ----- | ----- | 20 |
| | 1″ | E535100 | RSLR30S | ----- | ----- | 15 |
| | 1 1/4″ | E535125 | RSLR40S | ----- | ----- | 10 |
| | 1 1/2″ | E535150 | RSLR50S | ----- | ----- | 10 |
| | 2″ | E535200 | RSLR60S | ----- | ----- | 10 |
| | 2 1/2″ | E535250 | RSLR70S | ----- | ----- | 4 |
| | 3″ | E535300 | RSLR80S | ----- | ----- | 4 |
| | 3 1/2″ | E535350 | RSLR90S | ----- | ----- | 5 |
| | 4″ | E535400 | RSLR100S | ----- | ----- | 5 |
| **BRASS FASTENER PRODUCTS - ACCESS FITTING - TYPE E** | | | | | | |
|  | 1/2″ | E536050 | RSE10S | ----- | ----- | 30 |
| | 3/4″ | E536075 | RSE20S | ----- | ----- | 20 |
| | 1″ | E536100 | RSE30S | ----- | ----- | 15 |
| | 1 1/4″ | E536125 | RSE40S | ----- | ----- | 20 |
| | 1 1/2″ | E536150 | RSE50S | ----- | ----- | 10 |
| | 2″ | E536200 | RSE60S | ----- | ----- | 15 |
| | 2 1/2″ | E536250 | RSE70S | ----- | ----- | 4 |
| | 3″ | E536300 | RSE80S | ----- | ----- | 4 |
| | 3 1/2″ | E536350 | RSE90S | ----- | ----- | 4 |
| | 4″ | E536400 | RSE100S | ----- | ----- | 4 |
| **BRASS FASTENER PRODUCTS - ACCESS FITTING - TYPE T** | | | | | | |
|  | 1/2″ | E537050 | RST10S | ----- | ----- | 30 |
| | 3/4″ | E537075 | RST20S | ----- | ----- | 20 |
| | 1″ | E537100 | RST30S | ----- | ----- | 25 |
| | 1 1/4″ | E537125 | RST40S | ----- | ----- | 15 |
| | 1 1/2″ | E537150 | RST50S | ----- | ----- | 10 |
| | 2″ | E537200 | RST60S | ----- | ----- | 10 |
| | 2 1/2″ | E537250 | RST70S | ----- | ----- | 4 |
| | 3″ | E537300 | RST80S | ----- | ----- | 4 |
| | 3 1/2″ | E537350 | RST90S | ----- | ----- | 4 |
| | 4″ | E537400 | RST100S | ----- | ----- | 4 |
| **BRASS FASTENER PRODUCTS - ACCESS FITTING - TYPE TB** | | | | | | |
|  | 1/2″ | E569050 | RSTB10S | ----- | ----- | 30 |
| | 3/4″ | E569075 | RSTB20S | ----- | ----- | 20 |
| | 1″ | E569100 | RSTB30S | ----- | ----- | 10 |
| | 1 1/4″ | E569125 | RSTB40S | ----- | ----- | 10 |

# Rigid PVC Conduit Fittings

## With Brass Fasteners

| Item | Size in Inches | Part Number | Reference Royal | Reference CANTEX | Reference Thomas & Betts - Carlon | Carton Qty |
|---|---|---|---|---|---|---|
| **BRASS FASTENER PRODUCTS - JUNCTION BOX WITH GASKET** | | | | | | |
| 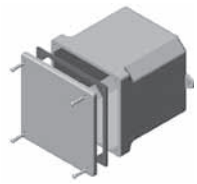 | 4" X 4" X 2" | E551442 | RJB442 | ------ | ------ | 15 |
| | 4" X 4" X 4" | E551444 | RJB444 | ------ | ------ | 10 |
| | 4" X 4" X 6" | E551446 | RJB446 | ------ | ------ | 8 |
| | 5" X 5" X 2" | E551552 | RJB552 | ------ | ------ | 12 |
| | 6" X 6" X 4" | E551664 | RJB664 | ------ | ------ | 15 |
| | 6" X 6" X 6" | E551666 | RJB666 | ------ | ------ | 4 |
| | 8" X 8" X 4" | E551884 | RJB884 | ------ | ------ | 4 |
| | 8" X 8" X 7" | E551887 | RJB887 | ------ | ------ | 4 |
| | 12" X 12" X 4" | E55112124 | RJB12124 | ------ | ------ | 2 |
| | 12" X 12" X 6" | E55112126 | RJB12126 | ------ | ------ | 4 |
| | 12" X 12" X 8" | E55112128 | RJB12128 | ------ | ------ | 3 |
| **BRASS FASTENER PRODUCTS - SINGLE GANG BOX - F SERIES** | | | | | | |
| 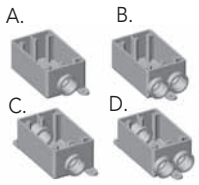  | A. 1/2" FS | E542001 | RFS10 | ------ | ------ | 10 |
| | A. 3/4" FS | E542002 | RFS15 | ------ | ------ | 10 |
| | B. 1/2" FSS | E542003 | RFSS10 | ------ | ------ | 10 |
| | B. 3/4" FSS | E542004 | RFSS15 | ------ | ------ | 10 |
| | C. 1/2" FSC | E542005 | RFSC10 | ------ | ------ | 10 |
| | C. 3/4" FSC | E542006 | RFSC15 | ------ | ------ | 10 |
| | D. 1/2" FSCC | E542007 | RFSCC10 | ------ | ------ | 10 |
| | D. 3/4" FSCC | E542008 | RFSCC15 | ------ | ------ | 10 |
| **BRASS FASTENER PRODUCTS - SINGLE GANG DEEP BOX - FD SERIES** | | | | | | |
| 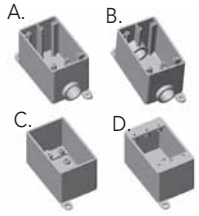  | A. 1/2" FDS | E543001 | RFDS10 | ------ | ------ | 10 |
| | A. 3/4" FDS | E543002 | RFDS15 | ------ | ------ | 10 |
| | A. 1" FDS | E543003 | RFDS20 | ------ | ------ | 10 |
| | B. 1/2" FDC | E543004 | RFDC10 | ------ | ------ | 10 |
| | B. 3/4" FDC | E543005 | RFDC15 | ------ | ------ | 10 |
| | B. 1" FDC | E543006 | RFDC20 | ------ | ------ | 10 |
| | C. BLANK | E543007 | RFD | ------ | ------ | 10 |
| **BRASS FASTENER PRODUCTS - DOUBLE GANG BOX - F SERIES** | | | | | | |
| 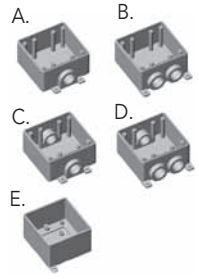  | A. 1/2" FS | E541001 | ------ | ------ | ------ | 10 |
| | A. 3/4" FS | E541002 | ------ | ------ | ------ | 10 |
| | A. 1" FS | E541003 | ------ | ------ | ------ | 10 |
| | B. 1/2" FSS | E541004 | ------ | ------ | ------ | 10 |
| | B. 3/4" FSS | E541005 | ------ | ------ | ------ | 10 |
| | B. 1" FSS | E541006 | ------ | ------ | ------ | 10 |
| | C. 1/2" FSC | E541007 | ------ | ------ | ------ | 10 |
| | C. 3/4" FSC | E541008 | ------ | ------ | ------ | 10 |
| | C. 1" FSC | E541009 | ------ | ------ | ------ | 10 |
| | D. 1/2" FSCC | E541011 | ------ | ------ | ------ | 10 |
| | D. 3/4" FSCC | E541012 | ------ | ------ | ------ | 10 |
| | D. 1" FSCC | E541013 | ------ | ------ | ------ | 10 |
| | E. BLANK | E541010 | ------ | ------ | ------ | 10 |

# Rigid PVC Conduit Fittings

## With Brass Fasteners

| Item | Size in Inches | Part Number | Reference Royal | Reference CANTEX | Reference Thomas & Betts - Carlon | Carton Qty |
|---|---|---|---|---|---|---|
| **BRASS FASTENER PRODUCTS - SINGLE GANG COVER PLATE - F SERIES** | | | | | | |
| 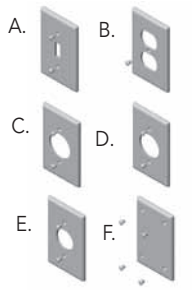 | A. TOGGLE | E546002 | RTSC15/10 | ------ | ------ | 100 |
| | B. DUPLEX | E546001 | RDRC15/10 | ------ | ------ | 100 |
| | C. 15 AMP | E546004 | R20RC15/10 | ------ | ------ | 100 |
| | D. 20 AMP | E546003 | R20 3RC15/10 | ------ | ------ | 100 |
| | E. 30 AMP | E546005 | R30 3RC15/10 | ------ | ------ | 100 |
| | F. BLANK W/ GASKET | E546006 | RBRC15/10 | ------ | ------ | 100 |
| **BRASS FASTENER PRODUCTS - DOUBLE GANG WEATHERPROOF COVER PLATE** | | | | | | |
| 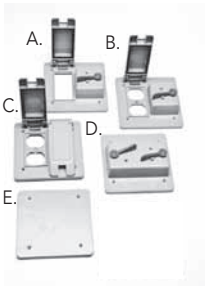 | B. GFI & TOGGLE | E549005 | ------ | ------ | ------ | 10 |
| | C. DUPLEX & TOGGLE | E549006 | ------ | ------ | ------ | 10 |
| | D. DOUBLE DU PLEX | E549007 | ------ | ------ | ------ | 10 |
| | E. TOGGLE | E549008 | ------ | ------ | ------ | 10 |
| | F. BLANK | E549009 | ------ | ------ | ------ | 25 |
| **BRASS FASTENER PRODUCTS - SINGLE GANG WEATHERPROOF COVER PLATE** | | | | | | |
| 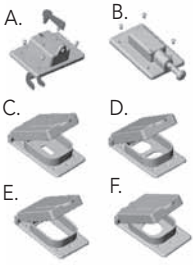 | A. TOGGLE S/ COVER | E547002 | RVSC15/10 | ------ | ------ | 20 |
| | B. PLUNGER S/ COVER | E547008 | RVPT15/10 | ------ | ------ | 20 |
| | C. TOGGLE | E547009 | RWTG15/10 | ------ | ------ | 20 |
| | D. DUPLEX | E547001 | RWDR15/10 | ------ | ------ | 20 |
| | D. DUPLEX WHITE | E547010 | RWDR15/10W | ------ | ------ | 20 |
| | E. GROUND FAULT | E547007 | RWGF15/10 | ------ | ------ | 20 |
| | E. GROUND FAULT WHITE | E547011 | RWGF15/10W | ------ | ------ | 20 |
| | F. 15 AMP | E547003 | RWTL15 | ------ | ------ | 20 |
| | F. 20 AMP | E547004 | RWTL20 | ------ | ------ | 20 |
| | F. 30 AMP | E547005 | RWTL30 | ------ | ------ | 20 |
| | F. 50 AMP | E547006 | RWTL50 | ------ | ------ | 20 |

# ENT - Tubing

## Electrical Non-Metallic Tubing

| Item | Size in Inches | Part Number | Reference Royal | Reference CANTEX | Reference Thomas & Betts - Carlon | Carton Qty |
|---|---|---|---|---|---|---|
| **COILS - BLUE ENT TUBING** | | | | | | |
|  | | | | | | FEET |
| | 1/2 | EC005200BL | ----- | A51AEB1 | 12005 200 | 200 |
| | 3/4 | EC007100BL | ----- | A51AGA1 | 12007 100 | 100 |
| | 1 | EC010100BL | ----- | A51BAA1 | 12008 100 | 100 |
| | 1 1/4 | EC012350BL | ----- | ----- | ----- | 350 |
| | 1 1/2 | EC015300BL | ----- | ----- | ----- | 300 |
| | 2 | EC020250BL | ----- | ----- | ----- | 250 |
| **COILS - GREY ENT TUBING** | | | | | | |
|  | | | | | | FEET |
| | 1/2 | EC005370 | EC005370 | ----- | ----- | 370 |
| | 3/4 | EC007240 | EC007240 | ----- | ----- | 240 |
| | 1 | EC010160 | EC010160 | ----- | ----- | 160 |
| | 1 1/4 | EC012500 | EC012500 | ----- | ----- | 500 |
| | 1 1/2 | EC015300 | EC015300 | ----- | ----- | 300 |
| | 2 | EC020225 | EC020225 | ----- | ----- | 225 |
| **REELS - BLUE ENT TUBING** | | | | | | |
|  | | | | | | FEET |
| | 1/2 | ER 0051500BL | ----- | A51AEQ1 | 12005AK 001 | 1,500 |
| | 3/4 | ER 0071000BL | ----- | A51AGJ1 | 12007AA 001 | 1,000 |
| | 1 | ER 0101000BL | ----- | A51BAJ1 | ----- | 1,000 |
| | 1 1/4 | ER 0121000BL | ----- | ----- | ----- | 1,000 |
| | 1 1/2 | ER015750BL | ----- | ----- | 12010 750 | 750 |
| | 2 | ER020500BL | ----- | ----- | 12011 500 | 500 |

# ENT - Tubing

## Electrical Non-Metallic Tubing

| Item | Size in Inches | Part Number | Reference Royal | Reference CANTEX | Reference Thomas & Betts - Carlon | Carton Qty |
|---|---|---|---|---|---|---|
| **REELS - GREY ENT TUBING** | | | | | | |
|  | | | | | | FEET |
| | 1/2 | ER0052000 | ER0052000 | ----- | ----- | 2,000 |
| | 3/4 | ER0071500 | ER0071500 | ----- | ----- | 1,500 |
| | 1 | ER0101000 | ER0101000 | ----- | ----- | 1,000 |
| | 1 1/4 | ER0121000 | ER0121000 | ----- | ----- | 1,000 |
| | 1 1/2 | ER015750 | ER015750 | ----- | ----- | 750 |
| | 2 | ER020500 | ER020500 | ----- | ----- | 500 |
| **STRAIGHT LENGTH - BLUE ENT TUBING** | | | | | | |
|  | | | | | | EACH |
| | 1/2 | ES00510BL | ----- | ----- | ----- | 100 |
| | 3/4 | ES00710BL | ----- | ----- | ----- | 100 |
| | 1 | ES01010BL | ----- | ----- | ----- | 100 |
| **STRAIGHT LENGTH - GREY ENT TUBING** | | | | | | |
|  | | | | | SUPPLIED IN 10 FOOT LENGTHS | |
| | | | | | | EACH |
| | 1/2 | ES00510 | ES00510 | ----- | ----- | 100 |
| | 3/4 | ES00710 | ES00710 | ----- | ----- | 100 |
| | 1 | ES01010 | ES01010 | ----- | ----- | 100 |

# ENT - Fittings

## Electrical Non-Metallic Fittings

| Item | Size in Inches | Part Number | Reference Royal | Reference CANTEX | Reference Thomas & Betts - Carlon | Carton Qty |
|---|---|---|---|---|---|---|
| **ENT COUPLING** | | | | | | |
|  | 1/2 | RKC10 | RKC10 | 5163380 | A240D | 150 |
| | 3/4 | RKC15 | RKC15 | 5163381 | A240E | 100 |
| | 1 | RKC20 | RKC20 | 5163382 | A240F | 50 |
| | 1 1/4 | RKC25 | RKC25 | ----- | ----- | 50 |
| | 1 1/2 | RKC30 | RKC30 | ----- | ----- | 40 |
| | 2 | RKC35 | RKC35 | ----- | ----- | 25 |
| **ENT THREADED TERMINAL ADAPTER WITH LOCK NUT** | | | | | | |
|  | 1/2 | RKTA10 | RKTA10 | 5163415 | ----- | 150 |
| | 3/4 | RKTA15 | RKTA15 | 5163416 | ----- | 100 |
| | 1 | RKTA20 | RKTA20 | 5163417 | ----- | 50 |
| | 1 1/4 | RKTA25 | RKTA25 | ----- | ----- | 50 |
| | 1 1/2 | RKTA30 | RKTA30 | ----- | ----- | 50 |
| | 2 | RKTA35 | RKTA35 | ----- | ----- | 25 |
| **ENT ADAPTER WITH SET SCREW** | | | | | | |
|  | 1/2 | RKTC10 | RKTC10 | ----- | A245D | 125 |
| | 3/4 | RKTC15 | RKTC15 | ----- | A245E | 100 |
| | 1 | RKTC20 | RKTC20 | ----- | A245F | 50 |
| | 1 1/4 | RKTC25 | RKTC25 | ----- | ----- | 50 |
| | 1 1/2 | RKTC30 | RKTC30 | ----- | ----- | 40 |
| | 2 | RKTC35 | RKTC35 | ----- | ----- | 15 |
| **ENT QUICK SNAP TERMINAL ADAPTER** | | | | | | |
|  | 1/2 | RKTS10 | RKTS10 | 5163405 | A253D | 150 |
| | 3/4 | RKTS15 | RKTS15 | 5163406 | A253E | 100 |
| | 1 | RKTS20 | RKTS20 | 5163407 | A253F | 50 |
| **ENT CLIP RING** | | | | | | |
|  | 1/2 | RKR10 | RKR10 | ----- | ----- | 200† |
| | 3/4 | RKR15 | RKR15 | ----- | ----- | 200† |
| | 1 | RKR20 | RKR20 | ----- | ----- | 200† |
| | 1 1/4 | RKR25 | RKR25 | ----- | ----- | 100* |
| | 1 1/2 | RKR30 | RKR30 | ----- | ----- | 100* |
| | 2 | RKR35 | RKR35 | ----- | ----- | 50^ |

Rings are net priced per bag as follows: † = 20/bag * = 10/bag ^ = 5/bag

# ENT - Fittings

## Electrical Non-Metallic Fittings

| Item | Size in Inches | Part Number | Reference Royal | Reference CANTEX | Reference Thomas & Betts - Carlon | Carton Qty |
|---|---|---|---|---|---|---|
| **HEAVY DUTY LOCK NUT** | | | | | | |
|  | 1/2 | RLN10 | RLN10 | ----- | ----- | 200 |
| | 3/4 | RLN15 | RLN15 | ----- | ----- | 200 |
| | 1 | RLN20 | RLN20 | ----- | ----- | 200 |
| | 1 1/4 | RLN25 | RLN25 | ----- | ----- | 200 |
| | 1 1/2 | RLN30 | RLN30 | ----- | ----- | 200 |
| | 2 | RLN35 | RLN35 | ----- | ----- | 200 |
| **STRAIGHT STUBBY (POLYETHYLENE)** | | | | | | |
|  | 1/2 | RECM10 | RECM10 | EN050SBY | A210D | 150 |
| | 3/4 | RECM15 | RECM15 | EN075SBY | A210E | 150 |
| | 1 | RECM20 | RECM20 | EN100SBY | A210F | 200 |
| | 1 1/4 | RECM25 | RECM25 | ----- | ----- | 200 |
| **45 DEGREE ANGLED FORM STUBBY (POLYETHYLENE)** | | | | | | |
|  | 1/2 | RKASTB10 | RKASTB10 | ----- | A220D | 50 |
| | 3/4 | RKASTB15 | RKASTB15 | ----- | A220E | 50 |
| | 1 | RKASTB20 | RKASTB20 | ----- | A220F | 50 |
| | 1 1/4 | RKASTB25 | RKASTB25 | ----- | A220G | 50 |
| | 1 1/2 | RKASTB30 | RKASTB30 | ----- | A220H | 50 |
| | 2 | RKASTB35 | RKASTB35 | ----- | A220J | 50 |
| **TAPERED PLUG (POLYETHYLENE)** | | | | | | |
|  | 1/2 | RTP10 | RTP10 | ----- | ----- | 250 |
| | 3/4 | RTP15 | RTP15 | ----- | ----- | 100 |
| | 1 | RTP20 | RTP20 | ----- | ----- | 100 |
| **SLAB BOX EXTENSION** | | | | | | |
|  | 1" EXTENSION | RSMBXTENSION | RSMBXTENSION | ----- | ----- | 20 |

# ENT - Fittings

## Electrical Non-Metallic Fittings

| Item | Size in Inches | Part Number | Reference Royal | Reference CANTEX | Reference Thomas & Betts - Carlon | Carton Qty |
|---|---|---|---|---|---|---|
| **ENT SLAB BOX WITH HUB EXTENSIONS AND GREY LID** | | | | | | |
|  | 1/2 (8) | RSMB H 10 | RSMB H 10 | ENS0500C | ------ | 25 |
| | 1/2 (4) 3/4 (4) | RSMB H 10 15 | RSMB H 10 15 | ENS0507C | ------ | 25 |
| | 1/2 (4) 3/4 (2) | RSMB H 10 15 20 | RSMB H 10 15 20 | ------ | ------ | 25 |
| | 1 (2) | | | ------ | ------ | |
| | 1/2 (4) 1 (4) | RSMB H 10 20 | RSMB H 10 20 | ------ | ------ | 25 |
| | 3/4 (8) | RSMB H 15 | RSMB H 15 | ------ | ------ | 25 |
| | 3/4 (4) 1 (4) | RSMB H 15 20 | RSMB H 15 20 | ------ | ------ | 25 |
| **ENT SLAB BOX WITH KNOCKOUTS AND GREY LID** | | | | | | |
|  | 1/2 (8) | RSMB 10 | RSMB 10 | ENS0500K | ------ | 25 |
| | 1/2 (4) 3/4 (4) | RSMB 10 15 | RSMB 10 15 | ENS0507K | ------ | 25 |
| | 1/2 (4) 3/4 (2) | RSMB 10 15 20 | RSMB 10 15 20 | ------ | ------ | 25 |
| | 1 (2) | | | ------ | ------ | |
| | 1/2 (2) 3/4 (4) | RSMB 15 20 10 | RSMB 15 20 10 | ------ | ------ | 25 |
| | 1 (2) | | | ------ | ------ | |
| | 3/4 (8) | RSMB 15 | RSMB 15 | ------ | ------ | 25 |
| **ENT SHALLOW SLAB BOX** | | | | | | |
|  | 1/2 (8) | RSMBS H 10 | RSMBS H 10 | ------ | ------ | 25 |
| | 1/2 (4) 3/4 (4) | RSMBS H 10 15 | RSMBS H 10 15 | ------ | ------ | 25 |
| | 1/2 (4) 3/4 (2) | RSMBS H 10 15 20 | RSMBS H 10 15 20 | ------ | ------ | 25 |
| | 1 (2) | | | ------ | ------ | |
| | 1/2 (4) 1 (4) | RSMBS H 10 20 | RSMBS H 10 20 | ------ | ------ | 25 |
| | 3/4 (8) | RSMBS H 15 | RSMBS H 15 | ------ | ------ | 25 |
| | 3/4 (4) 1 (4) | RSMBS H 15 20 | RSMBS H 15 20 | ------ | ------ | 25 |
| **ENT ISOLATOR MODULE SLAB BOX** | | | | | | |
|  | 1/2 (8) | RSMB 10 IMB | RSMB 10 IMB | ------ | ------ | 20 |
| | 1/2 (4) 3/4 (4) | RSMB 10 15 IMB | RSMB 10 15 IMB | ------ | ------ | 20 |
| | 1/2 (4) 3/4 (2) | RSMB 10 15 20 IMB | RSMB 10 15 20 IMB | ------ | ------ | 20 |
| | 1 (2) | | | ------ | ------ | |
| | 1/2 (4) 1 (4) | RSMB 10 20 IMB | RSMB 10 20 IMB | ------ | ------ | 20 |
| | 3/4 (8) | RSMB 15 IMB | RSMB 15 IMB | ------ | ------ | 20 |
| | 3/4 (4) 1 (4) | RSMB 15 20 IMB | RSMB 15 20 IMB | ------ | ------ | 20 |

# ENT - Fittings

## Electrical Non-Metallic Fittings

| Item | Size in Inches | Part Number | Reference Royal | Reference CANTEX | Reference Thomas & Betts - Carlon | Carton Qty |
|---|---|---|---|---|---|---|
| **ENT SHALLOW SINGLE GANG CONCRETE WALL BOX** | | | | | | |
|  | 1/2 | RSVSB H 10 | RSVSB H 10 | ------ | ------ | 70 |
| | 3/4 | RSVSB H 15 | RSVSB H 15 | ------ | ------ | 70 |
| | 1 | RSVSB H 20 | RSVSB H 20 | ------ | ------ | 70 |
| **ENT DEEP SINGLE GANG CONCRETE WALL BOX** | | | | | | |
|  | 1/2 (8) | RSVDB H 10 | RSVDB H 10 | ------ | ------ | 25 |
| | 1/2 (4) 3/4 (4) | RSVDB H 10 15 | RSVDB H 10 15 | ------ | ------ | 25 |
| | 1/2 (4) 3/4 (2) | RSVDB H 10 15 20 | RSVDB H 10 15 20 | ------ | ------ | 25 |
| | 1 (2) | | | | | |
| | 1/2 (4) 1 (4) | RSVDB H 10 20 | RSVDB H 10 20 | ------ | ------ | 25 |
| | 3/4 (8) | RSVDB H 15 | RSVDB H 15 | ------ | ------ | 25 |

# PVC Enclosures

## Electrical Non-Metallic PVC Enclosures

| Item | Size in Inches | Part Number | Reference Royal | Reference CANTEX | Reference Thomas & Betts - Carlon | Weight Each Lbs. |
|---|---|---|---|---|---|---|
| ELECTRICAL TROUGH BOX (SCREW COVER) | | | | | | |
|  | 4 X 4 X 12 | ETR040412 | ETR040412 | ----- | ----- | 3 |
| | 4 X 4 X 18 | ETR040418 | ETR040418 | ----- | ----- | 4 |
| | 4 X 4 X 24 | ETR040424 | ETR040424 | ----- | ----- | 5 |
| | 4 X 4 X 36 | ETR040436 | ETR040436 | ----- | ----- | 8 |
| | 4 X 4 X 48 | ETR040448 | ETR040448 | ----- | ----- | 10 |
| | 4 X 4 X 60 | ETR040460 | ETR040460 | ----- | ----- | 12 |
| | 6 X 6 X 12 | ETR060612 | ETR060612 | ----- | ----- | 5 |
| | 6 X 6 X 18 | ETR060618 | ETR060618 | ----- | ----- | 7 |
| | 6 X 6 X 24 | ETR060624 | ETR060624 | ----- | ----- | 8 |
| | 6 X 6 X 36 | ETR060636 | ETR060636 | ----- | ----- | 11 |
| | 6 X 6 X 48 | ETR060648 | ETR060648 | ----- | ----- | 14 |
| | 6 X 6 X 60 | ETR060660 | ETR060660 | ----- | ----- | 17 |
| | 8 X 8 X 12 | ETR080812 | ETR080812 | ----- | ----- | 7 |
| | 8 X 8 X 18 | ETR080818 | ETR080818 | ----- | ----- | 9 |
| | 8 X 8 X 24 | ETR080824 | ETR080824 | ----- | ----- | 11 |
| | 8 X 8 X 36 | ETR080836 | ETR080836 | ----- | ----- | 15 |
| | 8 X 8 X 48 | ETR080848 | ETR080848 | ----- | ----- | 19 |
| | 8 X 8 X 60 | ETR080860 | ETR080860 | ----- | ----- | 23 |
| | 12 X 12 X 24 | ETR121224 | ETR121224 | ----- | ----- | 27 |
| | 12 X 12 X 36 | ETR121236 | ETR121236 | ----- | ----- | 33 |
| | 12 X 12 X 48 | ETR121248 | ETR121248 | ----- | ----- | 39 |
| | 12 X 12 X 60 | ETR121260 | ETR121260 | ----- | ----- | 45 |
| ELECTRICAL TROUGH BOX (LATCH COVER) | | | | | | |
| | 4 X 4 X 12 | ELC040412 | ELC040412 | ----- | ----- | 3 |
| | 4 X 4 X 18 | ELC040418 | ELC040418 | ----- | ----- | 4 |
| | 4 X 4 X 24 | ELC040424 | ELC040424 | ----- | ----- | 5 |
| | 4 X 4 X 36 | ELC040436 | ELC040436 | ----- | ----- | 8 |
| | 4 X 4 X 48 | ELC040448 | ELC040448 | ----- | ----- | 10 |
| | 4 X 4 X 60 | ELC040460 | ELC040460 | ----- | ----- | 12 |
| | 6 X 6 X 12 | ELC060612 | ELC060612 | ----- | ----- | 5 |
| | 6 X 6 X 18 | ELC060618 | ELC060618 | ----- | ----- | 7 |
| | 6 X 6 X 24 | ELC060624 | ELC060624 | ----- | ----- | 8 |
| | 6 X 6 X 36 | ELC060636 | ELC060636 | ----- | ----- | 11 |
| | 6 X 6 X 48 | ELC060648 | ELC060648 | ----- | ----- | 14 |
| | 6 X 6 X 60 | ELC060660 | ELC060660 | ----- | ----- | 17 |
| | 8 X 8 X 12 | ELC080812 | ELC080812 | ----- | ----- | 7 |
| | 8 X 8 X 18 | ELC080818 | ELC080818 | ----- | ----- | 9 |
| | 8 X 8 X 24 | ELC080824 | ELC080824 | ----- | ----- | 11 |
| | 8 X 8 X 36 | ELC080836 | ELC080836 | ----- | ----- | 15 |
| | 8 X 8 X 48 | ELC080848 | ELC080848 | ----- | ----- | 19 |
| | 8 X 8 X 60 | ELC080860 | ELC080860 | ----- | ----- | 23 |
| | 12 X 12 X 24 | ELC121224 | ELC121224 | ----- | ----- | 27 |
| | 12 X 12 X 36 | ELC121236 | ELC121236 | ----- | ----- | 33 |
| | 12 X 12 X 48 | ELC121248 | ELC121248 | ----- | ----- | 39 |

# PVC Enclosures

## Electrical Non-Metallic PVC Enclosures





| Item | Size in Inches | Part Number | Reference Royal | Reference CANTEX | Reference Thomas & Betts - Carlon | Weight Each Lbs. |
|---|---|---|---|---|---|---|
| LARGE FABRICATED JUNCTION BOXES | | | | | | |
| | 12 X 10 X 6 | E053121006 | E053121006 | ----- | ----- | 8 |
| | 12 X 10 X 8 | E053121008 | E053121008 | ----- | ----- | 9 |
| | 12 X 12 X 4 | E053121204 | E053121204 | ----- | ----- | 7 |
| | 12 X 12 X 6 | E053121206 | E053121206 | ----- | ----- | 9 |
| | 12 X 12 X 8 | E053121208 | E053121208 | ----- | ----- | 10 |
| | 12 X 12 X 12 | E053121212 | E053121212 | ----- | ----- | 14 |
| | 14 X 12 X 4 | E053141204 | E053141204 | ----- | ----- | 9 |
| | 14 X 12 X 6 | E053141206 | E053141206 | ----- | ----- | 10 |
| | 14 X 12 X 8 | E053141208 | E053141208 | ----- | ----- | 12 |
| | 14 X 14 X 4 | E053141404 | E053141404 | ----- | ----- | 10 |
| | 14 X 14 X 6 | E053141406 | E053141406 | ----- | ----- | 12 |
| | 14 X 14 X 8 | E053141408 | E053141408 | ----- | ----- | 14 |
| | 14 X 14 X 10 | E053141410 | E053141410 | ----- | ----- | 16 |
| | 14 X 14 X 14 | E053141414 | E053141414 | ----- | ----- | 19 |
| | 16 X 16 X 10 | E053161610 | E053161610 | ----- | ----- | 21 |
| | 16 X 16 X 12 | E053161612 | E053161612 | ----- | ----- | 23 |
| | 16 X 16 X 16 | E053161616 | E053161616 | ----- | ----- | 22 |
| | 18 X 12 X 4 | E053181204 | E053181204 | ----- | ----- | 10 |
| | 18 X 12 X 6 | E053181206 | E053181206 | ----- | ----- | 12 |
| | 18 X 12 X 8 | E053181208 | E053181208 | ----- | ----- | 13 |
| | 18 X 16 X 4 | E053181604 | E053181604 | ----- | ----- | 12 |
| | 18 X 16 X 6 | E053181606 | E053181606 | ----- | ----- | 14 |
| | 18 X 16 X 8 | E053181608 | E053181608 | ----- | ----- | 16 |
| | 18 X 18 X 6 | E053181806 | E053181806 | ----- | ----- | 16 |
| | 18 X 18 X 8 | E053181808 | E053181808 | ----- | ----- | 18 |
| | 18 X 18 X 10 | E053181810 | E053181810 | ----- | ----- | 20 |
| | 18 X 18 X 12 | E053181812 | E053181812 | ----- | ----- | 22 |
| | 18 X 18 X 18 | E053181818 | E053181818 | ----- | ----- | 26 |
| | 20 X 18 X 8 | E053201808 | E053201808 | ----- | ----- | 20 |
| | 20 X 20 X 8 | E053202008 | E053202008 | ----- | ----- | 22 |
| | 24 X 18 X 6 | E053241806 | E053241806 | ----- | ----- | 20 |
| | 24 X 18 X 8 | E053241808 | E053241808 | ----- | ----- | 22 |
| | 24 X 18 X 12 | E053241812 | E053241812 | ----- | ----- | 25 |
| | 24 X 20 X 8 | E053242008 | E053242008 | ----- | ----- | 25 |
| | 24 X 24 X 6 | E053242406 | E053242406 | ----- | ----- | 25 |
| | 24 X 24 X 8 | E053242408 | E053242408 | ----- | ----- | 28 |
| | 24 X 24 X 10 | E053242410 | E053242410 | ----- | ----- | 33 |
| | 24 X 24 X 12 | E053242412 | E053242412 | ----- | ----- | 35 |
| | 24 X 24 X 24 | E053242424 | E053242424 | ----- | ----- | 40 |
| | 30 X 24 X 8 | E053302408 | E053302408 | ----- | ----- | 34 |
| | 30 X 30 X 10 | E053303010 | E053303010 | ----- | ----- | 39 |
| | 30 X 30 X 20 | E053303020 | E053303020 | ----- | ----- | 48 |
| | 30 X 30 X 30 | E053303030 | E053303030 | ----- | ----- | 60 |
| | 36 X 24 X 8 | E053362408 | E053362408 | ----- | ----- | 39 |
| | 36 X 36 X 12 | E053363612 | E053363612 | ----- | ----- | 61 |
| | 36 X 36 X 18 | E053363618 | E053363618 | ----- | ----- | 65 |
| | 36 X 36 X 20 | E053363620 | E053363620 | ----- | ----- | 67 |
| | 36 X 36 X 36 | E053363636 | E053363636 | ----- | ----- | 70 |
| | 40 X 40 X 12 | E053404012 | E053404012 | ----- | ----- | 78 |
| | 40 X 40 X 20 | E053404020 | E053404020 | ----- | ----- | 88 |

# PVC Enclosures

## Electrical Non-Metallic PVC Enclosures

| Item | Size in Inches | Part Number | Reference Royal | Reference CANTEX | Reference Thomas & Betts - Carlon | Weight Each Lbs. |
|---|---|---|---|---|---|---|
| ELECTRICAL ENCLOSURES | | | | | | |
|  | 20 X 12 X 8 | EBH201208 | EBH201208 | ----- | ----- | 14 |
| | 20 X 16 X 6 | EBH201606 | EBH201606 | ----- | ----- | 16 |
| | 20 X 16 X 8 | EBH201608 | EBH201608 | ----- | ----- | 17 |
| | 20 X 16 X 10 | EBH201610 | EBH201610 | ----- | ----- | 20 |
| | 20 X 16 X 12 | EBH201612 | EBH201612 | ----- | ----- | 22 |
| | 20 X 20 X 6 | EBH202006 | EBH202006 | ----- | ----- | 18 |
| | 20 X 20 X 8 | EBH202008 | EBH202008 | ----- | ----- | 21 |
| | 20 X 20 X 10 | EBH2022010 | EBH2022010 | ----- | ----- | 23 |
| | 20 X 24 X 6 | EBH2022406 | EBH2022406 | ----- | ----- | 21 |
| | 20 X 24 X 8 | EBH202408 | EBH202408 | ----- | ----- | 24 |
| | 24 X 12 X 6 | EBH241206 | EBH241206 | ----- | ----- | 15 |
| | 24 X 12 X 8 | EBH241208 | EBH241208 | ----- | ----- | 17 |
| | 24 X 12 X 10 | EBH241210 | EBH241210 | ----- | ----- | 19 |
| | 24 X 16 X 6 | EBH241606 | EBH241606 | ----- | ----- | 18 |
| | 24 X 16 X 8 | EBH241608 | EBH241608 | ----- | ----- | 20 |
| | 24 X 20 X 8 | EBH242008 | EBH242008 | ----- | ----- | 24 |
| | 24 X 20 X 10 | EBH242010 | EBH242010 | ----- | ----- | 26 |
| | 24 X 20 X 12 | EBH242012 | EBH242012 | ----- | ----- | 29 |
| | 24 X 20 X 16 | EBH242016 | EBH242016 | ----- | ----- | 34 |
| | 24 X 24 X 6 | EBH242406 | EBH242406 | ----- | ----- | 25 |
| | 24 X 24 X 8 | EBH242408 | EBH242408 | ----- | ----- | 28 |
| | 24 X 24 X 10 | EBH242410 | EBH242410 | ----- | ----- | 30 |
| | 24 X 24 X 12 | EBH242412 | EBH242412 | ----- | ----- | 33 |
| | 24 X 24 X 16 | EBH242416 | EBH242416 | ----- | ----- | 38 |
| | 24 X 30 X 8 | EBH243008 | EBH243008 | ----- | ----- | 33 |
| | 30 X 16 X 6 | EBH301606 | EBH301606 | ----- | ----- | 22 |
| | 30 X 20 X 6 | EBH302006 | EBH302006 | ----- | ----- | 26 |
| | 30 X 20 X 8 | EBH302008 | EBH302008 | ----- | ----- | 29 |
| | 30 X 20 X 10 | EBH302010 | EBH302010 | ----- | ----- | 32 |
| | 30 X 24 X 6 | EBH302406 | EBH302406 | ----- | ----- | 30 |
| | 30 X 24 X 8 | EBH302408 | EBH302408 | ----- | ----- | 33 |
| | 30 X 24 X 10 | EBH302410 | EBH302410 | ----- | ----- | 36 |
| | 30 X 24 X 12 | EBH302412 | EBH302412 | ----- | ----- | 39 |
| | 30 X 24 X 16 | EBH302416 | EBH302416 | ----- | ----- | 45 |
| | 30 X 24 X 20 | EBH302420 | EBH302420 | ----- | ----- | 51 |
| | 30 X 24 X 24 | EBH302424 | EBH302424 | ----- | ----- | 57 |
| | 30 X 30 X 8 | EBH303008 | EBH303008 | ----- | ----- | 39 |
| | 30 X 30 X 12 | EBH303012 | EBH303012 | ----- | ----- | 46 |
| | 30 X 36 X 8 | EBH303608 | EBH303608 | ----- | ----- | 46 |
| | 36 X 24 X 6 | EBH362406 | EBH362406 | ----- | ----- | 35 |
| | 36 X 24 X 8 | EBH362408 | EBH362408 | ----- | ----- | 29 |
| | 36 X 24 X 10 | EBH362410 | EBH362410 | ----- | ----- | 42 |

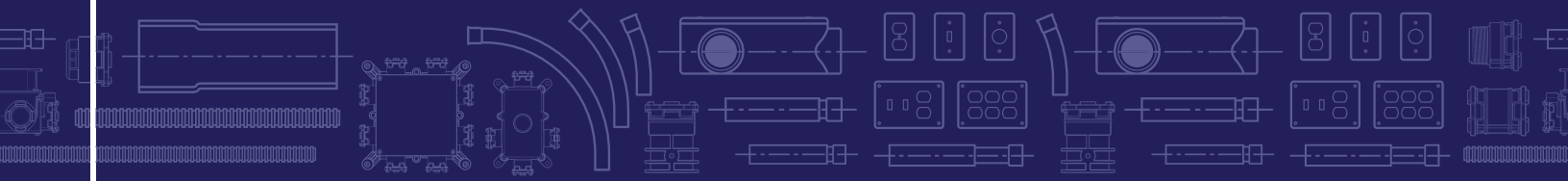

**Our various pipe and fittings solutions have been manufactured to meet the needs of our customers and their applications. Contact the below Sales Center for more information:**

- Plumbing Fittings Solutions
- Electrical Pipe & Fittings Solutions
- Municipal Pipe & Fittings Solutions



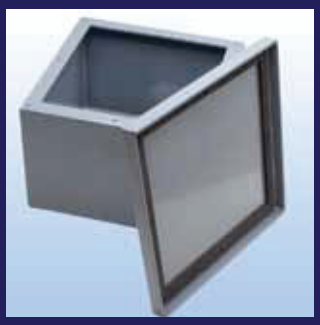

**Sales & Distribution Center:**

Royal Building Products
56400 Mound Road
Shelby Twp., MI 48316
T 1.800.232.5690
F 586.781.0888

royalbuildingproducts.com/plastic-trends

Printed 11.2012

ROYAL
Building Products

Pipe & Fittings Solutions | Municipal Plumbing Electrical

# Liquid-Tight Conduit
## Malleable Iron Connectors

### Technical Specifications

- Heavy duty malleable iron.
- Zinc electroplated for corrosion resistance.
- Tapered threaded hub complete with nitrile “O” ring and steel locknut.



**CI6103 (-IT) / CI6116 (-IT)**

IT: with insulated throat.

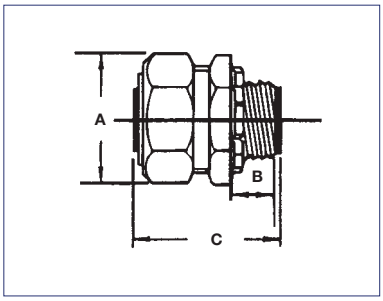




**CI6303 (-IT) / CI6316 (-IT)**

IT: with insulated throat.

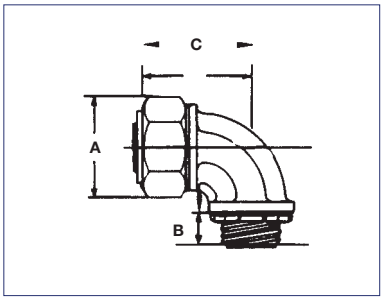




**LT-450 / LT-453**

| Cat. No. | Trade Size | KO Size | Dimensions A | B | C |
|---|---|---|---|---|---|
| **Straight Liquid–Tight Connectors** (Malleable Iron) | | | | | |
| CI6103 | 3/8 | 1/2 | 1-1/8 | 1/2 | 1-1/2 |
| CI6104 | 1/2 | 1/2 | 1-1/4 | 1/2 | 1-1/2 |
| CI6106 | 3/4 | 3/4 | 1-1/2 | 9/16 | 1-3/4 |
| CI6108 | 1 | 1 | 1 3/4 | 5/8 | 1-7/8 |
| CI6110 | 1-1/4 | 1-1/4 | 2-1/4 | 11/16 | 2-3/16 |
| CI6112 | 1-1/2 | 1-1/2 | 2-9/16 | 13/16 | 2-3/8 |
| CI6116 | 2 | 2 | 3-1/16 | 15/16 | 2-7/8 |
| **Straight Insulated Liquid–Tight Connectors** (Malleable Iron) | | | | | |
| CI6103-IT | 3/8 | 1/2 | 1-1/8 | 1/2 | 1-9/16 |
| CI6104-IT | 1/2 | 1/2 | 1-1/4 | 1/2 | 1-9/16 |
| CI6106-IT | 3/4 | 3/4 | 1-1/2 | 9/16 | 1-13/16 |
| CI6108-IT | 1 | 1 | 1-3/4 | 5/8 | 1-15/16 |
| CI6110-IT | 1-1/4 | 1-1/4 | 2-1/4 | 11/16 | 2-1/4 |
| CI6112-IT | 1-1/2 | 1-1/2 | 2-9/16 | 13/16 | 2-7/16 |
| CI6116-IT | 2 | 2 | 3-1/16 | 15/16 | 2-15/16 |
| **90° Liquid–Tight Connectors** (Malleable Iron) | | | | | |
| CI6303 | 3/8 | 1/2 | 1-1/8 | 1/2 | 1-5/8 |
| CI6304 | 1/2 | 1/2 | 1-1/4 | 1/2 | 1-3/4 |
| CI6306 | 3/4 | 3/4 | 1-1/2 | 9/16 | 2-1/16 |
| CI6308 | 1 | 1 | 1-3/4 | 5/8 | 2-1/4 |
| CI6310 | 1-1/4 | 1-1/4 | 2-1/4 | 11/16 | 2-3/4 |
| CI6312 | 1-1/2 | 1-1/2 | 2-9/16 | 13/16 | 3-1/8 |
| CI6316 | 2 | 2 | 3-1/16 | 15/16 | 3-3/8 |
| **90° Insulated Liquid–Tight Connectors** (Malleable Iron) | | | | | |
| CI6303-IT | 3/8 | 1/2 | 1-1/8 | 1/2 | 1-5/8 |
| CI6304-IT | 1/2 | 1/2 | 1-1/4 | 1/2 | 1-3/4 |
| CI6306-IT | 3/4 | 3/4 | 1-1/2 | 9/16 | 2-1/16 |
| CI6308-IT | 1 | 1 | 1-3/4 | 5/8 | 2-1/4 |
| CI6310-IT | 1-1/4 | 1-1/4 | 2-1/4 | 11/16 | 2-3/4 |
| CI6312-IT | 1-1/2 | 1-1/2 | 2-9/16 | 13/16 | 3-1/8 |
| CI6316-IT | 2 | 2 | 3-1/16 | 15/16 | 3-3/8 |
| **45° Liquid–Tight Connectors** (Malleable Iron) | | | | | |
| LT-450 | 3/8 | 1/2 | 1-1/16 | 1/2 | 1-9/16 |
| LT-451 | 1/2 | 1/2 | 1-3/16 | 1/2 | 1-5/8 |
| LT-452 | 3/4 | 3/4 | 1-7/16 | 9/16 | 7/8 |
| LT-453 | 1 | 1 | 1-3/4 | 5/8 | 2-1/8 |
| **45° Connectors – Insulated Throat** (Malleable Iron) | | | | | |
| LT-950 | 3/8 | 1/2 | 1-1/16 | 1/2 | 1-9/16 |
| LT-951 | 1/2 | 1/2 | 1-3/16 | 1/2 | 1-5/8 |
| LT-952 | 3/4 | 3/4 | 1-7/16 | 9/16 | 1-7/8 |
| LT-953 | 1 | 1 | 1-3/4 | 5/8 | 2-1/8 |

# Liquid-Tight Conduit

## Zinc Alloy Connectors



**CI6603 (-IT) / CI6632 (-IT)**

**IT**: with insulated throat.

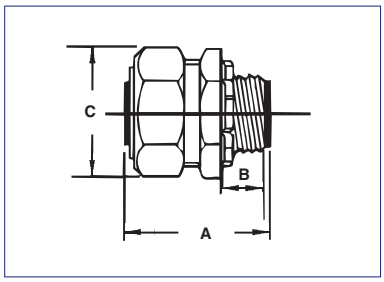




**CI6703 (-IT) / CI6716 (-IT)**

**IT**: with insulated throat.

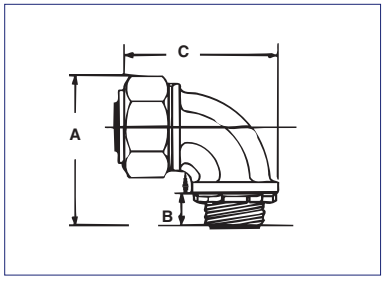


## Technical Specifications

| Cat. No. | Trade Size | KO Size | Dimensions A | B | C |
|---|---|---|---|---|---|
| **Straight Liquid-Tight Connectors** (Zinc Alloy) | | | | | |
| **CI6603** | 3/8 | 1/2 | 1.58 | 0.53 | 1.18 |
| **CI6604** | 1/2 | 1/2 | 1.52 | 0.53 | 1.29 |
| **CI6606** | 3/4 | 3/4 | 1.69 | 0.53 | 1.57 |
| **CI6608** | 1 | 1 | 2.06 | 0.58 | 1.81 |
| **CI6610** | 1-1/4 | 1-1/4 | 2.06 | 0.61 | 2.18 |
| **CI6612** | 1-1/2 | 1-1/2 | 2.09 | 0.63 | 2.51 |
| **CI6616** | 2 | 2 | 2.15 | 0.63 | 3.03 |
| **CI6620** | 2-1/2 | 2-1/2 | 3.54 | 1.02 | 3.68 |
| **CI6624** | 3 | 3 | 4.05 | 1.07 | 4.38 |
| **CI6632** | 4 | 4 | 4.99 | 1.15 | 5.54 |
| **Straight Insulated Liquid-Tight Connectors** (Zinc Alloy) | | | | | |
| **CI6603-IT** | 3/8 | 1/2 | 1.66 | 0.63 | 1.18 |
| **CI6604-IT** | 1/2 | 1/2 | 1.62 | 0.63 | 1.29 |
| **CI6606-IT** | 3/4 | 3/4 | 1.79 | 0.63 | 1.57 |
| **CI6608-IT** | 1 | 1 | 2.16 | 0.68 | 1.81 |
| **CI6610-IT** | 1-1/4 | 1-1/4 | 2.16 | 0.71 | 2.18 |
| **CI6612-IT** | 1-1/2 | 1-1/2 | 2.19 | 0.73 | 2.51 |
| **CI6616-IT** | 2 | 2 | 2.25 | 0.73 | 3.03 |
| **CI6620-IT** | 2-1/2 | 2-1/2 | 3.64 | 1.12 | 3.68 |
| **CI6624-IT** | 3 | 3 | 4.15 | 1.17 | 4.38 |
| **CI6632-IT** | 4 | 4 | 5.09 | 1.25 | 5.54 |
| **90° Liquid-Tight Connectors** (Zinc Alloy) | | | | | |
| **CI6703** | 3/8 | 1/2 | 2.11 | 0.53 | 2.53 |
| **CI6704** | 1/2 | 1/2 | 2.24 | 0.53 | 2.46 |
| **CI6706** | 3/4 | 3/4 | 2.47 | 0.55 | 2.79 |
| **CI6708** | 1 | 1 | 3.46 | 0.58 | 3.86 |
| **CI6710** | 1-1/4 | 1-1/4 | 3.37 | 0.67 | 3.99 |
| **CI6712** | 1-1/2 | 1-1/2 | 4.28 | 0.61 | 5.04 |
| **CI6716** | 2 | 2 | 4.21 | 0.71 | 5.06 |
| **LT-297** | 2-1/2 | 2-1/2 | 4.32 | 0.88 | 3.65 |
| **LT-298** | 3 | 3 | 4.81 | 0.88 | 4.32 |
| **LT-2910** | 4 | 4 | 5.32 | 0.88 | 5.32 |
| **90° Insulated Liquid-Tight Connectors** (Zinc Alloy) | | | | | |
| **CI6703-IT** | 3/8 | 1/2 | 2.27 | 0.63 | 2.53 |
| **CI6704-IT** | 1/2 | 1/2 | 2.24 | 0.63 | 2.46 |
| **CI6706-IT** | 3/4 | 3/4 | 2.54 | 0.65 | 2.79 |
| **CI6708-IT** | 1 | 1 | 3.25 | 0.68 | 3.86 |
| **CI6710-IT** | 1-1/4 | 1-1/4 | 3.50 | 0.77 | 3.99 |
| **CI6712-IT** | 1-1/2 | 1-1/2 | 4.30 | 0.71 | 5.04 |
| **CI6716-IT** | 2 | 2 | 5.16 | 0.81 | 5.06 |
| **LT-897** | 2-1/2 | 2-1/2 | 4.32 | 0.88 | 3.65 |
| **LT-898** | 3 | 3 | 4.81 | 0.88 | 4.32 |
| **LT-8910** | 4 | 4 | 5.32 | 0.88 | 5.32 |

Tapered threaded hub complete with zinc die cast locknut.

# Steel Core

## Type LT




## JIC

| Trade Size (in.) | Cat. No. | Carton Content* (m) | Cat. No. | Reel Content* (m) | Cat. No. | Reel Content* (m) | Inside Bend Radius | | Weight kg/30m |
|---|---|---|---|---|---|---|---|---|---|
| | | | | | | | in. | (mm) | |
| 1/4 | LT025-75 | 75 | - | - | - | - | 1.0 | (25.4) | 8 |
| 5/16 | LT032-75 | 75 | - | - | - | - | 1.0 | (25.4) | 8 |
| 3/8 | LT038-30 | 30 | LT038-150 | 150 | LT038-300 | 300 | 1.5 | (38.1) | 9 |
| 1/2 | LT050-30 | 30 | LT050-150 | 150 | LT050-300 | 300 | 2.0 | (50.8) | 11 |
| 3/4 | LT075-30 | 30 | LT075-150 | 150 | LT075-300 | 300 | 2.5 | (63.5) | 15 |
| 1 | LT100-30 | 30 | LT100-120 | 120 | - | | 3.0 | (76.2) | 24 |
| 1-1/4 | LT125-15 | 15 | LT125-75 | 75 | - | - | 3.5 | (88.9) | 31 |
| 1-1/2 | LT150-15 | 15 | LT150-45 | 45 | - | - | 4.5 | (114.3) | 40 |
| 2 | LT200-15 | 15 | LT200-30 | 30 | - | | 5.5 | (139.7) | 53 |
| 5 | LT500-8 | 8 | - | - | - | - | 17.5 | (444.5) | 212 |
| 6 | LT600-8 | 8 | - | - | - | - | 22.5 | (571.5) | 259 |

See Chart on p. G28 for dimensions and tolerances
* See p. G27 for label and packaging detail

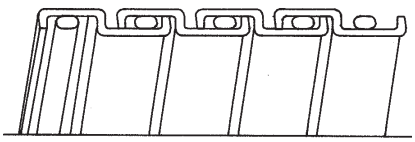

**Squarelock with Filler**
**5/16 in. - 2 in.**

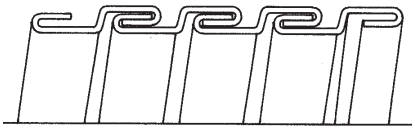

**Interlock**
**2-1/2 in. - 6 in.**

### Type LT

A general purpose, flexible liquidtight steel conduit designed for a variety of installations requiring motion, vibration and bending. It offers good mechanical and moisture protection to enclosed conductors.

### Construction

The flexible inner core is made from a spiral wound strip of corrosion resistant plating steel. The 1/4 through 2 inch trade sizes are squarelock formed and, with the exception of the 1/4 inch size, contain a nylon cord packing within the convolutions.

The larger sizes are constructed with a fully interlocked strip to add strength and to prevent unraveling.

A flexible yet durable PVC jacket is extruded over this core creating a liquidtight conduit resistant to most oils, acids and vapors present in industrial environments.

Refer to the Conduit — Chemical Resistance Chart beginning on p. G30.

### Applications

This conduit is used extensively in the machine tool and other industrial environments where flexibility is necessary for installation and maintenance or where vibration and movement must be absorbed. The inherent sunlight resistance of PVC enables this product to be used in outdoor applications. Compatible with standard liquidtight fittings. The construction of this conduit conforms to, and is suitable for use with Sections 16 & 17.7 of the Electrical Standard for Industrial Machinery (ANSI/NFPA-79).

### Working Temperatures

-20°C to 80°C

### Listing / Certification

JIC — manufactured in accordance with the dimensions and specifications as outlined by the Joint Industrial Council Standard for Mass Production Equipment and Machine Tools.

### Standard Colours

Machine tool grey and black. Other colours available upon request. Part numbers listed designate grey jacket.

# Steel Core

## Type LOR




| Trade Size (in.) | Cat. No. | Carton Content* (m) | Cat. No. | Carton Content* (m) | Cat. No. | Carton Content* (m) | Inside Bend Radius | | Wt. kg/30m |
|---|---|---|---|---|---|---|---|---|---|
| | | | | | | | in. | (mm) | |
| 3/8 | LOR038-30 | 30 | LOR038-150 | 150 | LOR038-300 | 300 | 2.0 | (50.8) | 19 |
| 1/2 | LOR050-50 | 30 | LOR050-150 | 150 | LOR050-300 | 300 | 2.5 | (63.5) | 11 |
| 3/4 | LOR075-30 | 30 | LOR075-150 | 150 | LOR075-300 | 300 | 3.0 | (76.2) | 15 |
| 1 | LOR100-30 | 30 | LOR100-120 | 120 | - | - | 4.0 | (101.6) | 24 |
| 1-1/4 | LOR125-15 | 15 | LOR125-60 | 60 | - | - | 4.5 | (114.3) | 31 |
| 1-1/2 | LOR150-15 | 15 | - | - | - | - | 5.5 | (139.7) | 40 |
| 2 | LOR200-15 | 15 | - | - | - | - | 7.0 | (177.8) | 53 |
| 2-1/2 | LOR250-8 | 8 | - | - | - | - | 9.5 | (241.3) | 76 |
| 3 | LOR300-8 | 8 | - | - | - | - | 11.5 | (292.1) | 118 |
| 3-1/2 | LOR350-8 | 8 | - | - | - | - | 13.0 | (330.2) | 132 |
| 4 | LOR400-8 | 8 | - | - | - | - | 14.0 | (356.6) | 156 |
| 5 | LOR500-8 | 8 | - | - | - | - | 20.0 | (508.0) | 221 |
| 6 | LOR600-8 | 8 | - | - | - | - | 22.5 | (571.5) | 259 |

See Chart on p. G28 for dimensions and tolerances
* See p. G27 for label and packaging detail

### Type LOR

JIC

This product is offered as a non-UL oil-resistant conduit that incorporates a high quality PVC jacket.

### Applications

The LOR is ideally used in situations where a UL listing or CSA certification is not a factor but where a flexible conduit must withstand exposure to many harsh chemicals, oils, UV, etc. This conduit conforms to Section 17.7 of the Electrical Standard for Industrial Machinery. (ANSI/NFPA-79) Compatible with Standard Liquidtight Fittings.

### Working Temperatures

-20°C to 60°C intermitting to 90°C

Standard Colours

Machine tool grey and black. Other colours available upon request. Part numbers listed designate grey jacket.

### Note

For a UL listed version, consult your Regional Sales Office for Type LA/LOR.

## Type EF




| Trade Size (in.) | Cat. No. | Carton Content* (m) | Cat. No. | Carton Content* (m) | Cat. No. | Carton Content* (m) | Inside Bend Radius | | Wt. kg/30m |
|---|---|---|---|---|---|---|---|---|---|
| | | | | | | | in. | (mm) | |
| 3/8 | EF038-30 | 30 | EF038-150 | 150 | EF038-300 | 300 | 1.5 | (38.1) | 9 |
| 1/2 | EF050-30 | 30 | EF050-150 | 150 | EF050-300 | 300 | 2.0 | (50.8) | 11 |
| 3/4 | EF075-30 | 30 | EF075-150 | 150 | EF075-300 | 300 | 3.0 | (63.5) | 14 |
| 1 | EF100-30 | 30 | EF100-120 | 120 | - | - | 3.0 | (76.2) | 20 |
| 1-1/4 | EF125-15 | 15 | EF125-75 | 75 | - | - | 3.5 | (88.9) | 25 |
| 1-1/2 | EF150-15 | 15 | EF150-45 | 45 | - | - | 4.5 | (114.3) | 41 |
| 2 | EF200-15 | 15 | EF200-30 | 30 | - | - | 5.5 | (139.7) | 5 |

See Chart on p. G28 for dimensions and tolerances
* See p. G27 for label and packaging detail

### Type EF

JIC

This flexible liquidtight conduit is a competitive grade version of our Type LT. It conforms to both the JIC standards for dimensions and general construction, and to Section 17.7 of the Electrical Standard for Industrial Machinery (ANSI/NFPA-79).

### Construction

The flexible inner core is constructed from a helically formed strip of corrosion resistant steel. A liquidtight PVC jacket is then extruded over the core.

### Applications

General installations requiring some movement and protection for contained conductors. Forms a liquidtight system when installed with standard fittings for use indoors or out.

### Working Temperatures

-20°C to 80°C

### Standard Colour

Machine tool grey

# Steel Core

## Type LA

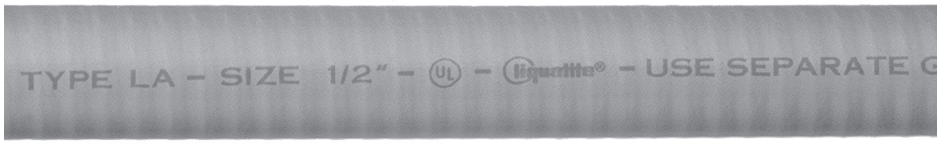


| Trade Size (in.) | Cat. No. | Carton Content* (m) | Cat. No. | Reel Content* (m) | Cat. No. | Reel Content* (m) | Inside Bend Radius | | Weight kg/30m |
|---|---|---|---|---|---|---|---|---|---|
| | | | | | | | in. | (mm) | |
| 3/8 | LA038-30 | 30 | LA038-150 | 150 | LA038-300 | 300 | 2.0 | (50.8) | 13 |
| 1/2 | LA050-30 | 30 | LA050-150 | 150 | LA050-300 | 300 | 3.0 | (76.2) | 15 |
| 3/4 | LA075-30 | 30 | LA075-150 | 150 | LA075-300 | 300 | 4.2 | (106.7) | 24 |
| 1 | LA100-30 | 30 | LA100-120 | 120 | - | - | 5.5 | (139.7) | 37 |
| 1-1/4 | LA125-15 | 15 | LA125-60 | 60 | - | - | 7.0 | (177.8) | 46 |
| 1-1/2 | LA150-15 | 15 | LA150-45 | 45 | - | - | 4.5 | (114.3) | 47 |
| 2 | LA200-15 | 15 | LA200-30 | 30 | - | - | 6.0 | (152.4) | 66 |
| 2-1/2 | LA250-8 | 8 | LA250-80 | 80 | - | - | 8.0 | (203.2) | 87 |
| 3 | LA300-8 | 8 | LA300-50 | 50 | - | - | 10.0 | (254.0) | 114 |
| 3-1/2 | LA350-8 | 8 | LA350-50 | 50 | - | - | 11.0 | (279.4) | 140 |
| 4 | LA400-8 | 8 | LA400-30 | 30 | - | - | 12.0 | (304.8) | 154 |

See Chart on p. G28 for dimensions and tolerances
* See p. G27 for label and packaging detail

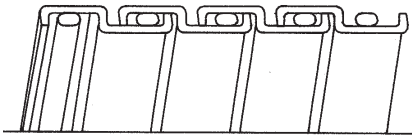

**Squarelock with filler**
**3/8 in. - 1-1/4 in.**

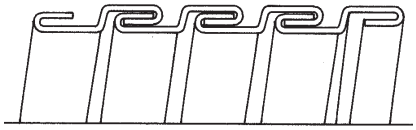

**Interlock**
**1-1/2 in. - 4 in.**

### Type LA

A flexible liquidtight steel conduit which is both listed UL and certified CSA. It offers outstanding protection against wet, oily conditions and is permitted for use in exposed or concealed locations.

### Construction

The flexible inner core is made from a spiral wound strip of heavy gauge, corrosion resistant, hot-dipped galvanized steel. The 3/8 through 1-1/4 inch trade sizes are square lock formed and include an integral bonding strip of copper that is enclosed within the convolutions throughout its entire length. The 1-1/2 through 4 inch trade sizes are designed with a fully interlocked strip.

The liquidtight jacketing material is of a high quality, rugged, flame retardant flexible PVC compound which resists oils, mild acids and exposure to sunlight. For further information, refer to the Conduit — Chemical Resistance chart beginning on p. G30.

### Applications

This conduit is intended for installation with Rule 12-1300 of Canadian Electrical Code (CEC) Part I 2009.

The use of a separate bonding conductor is mandatory in accordance with CEC Rule 12-1306 for Ordinary locations.

The use of Liquidtight Flexible Conduit with sign and Outline Lighting are in accordance with CEC Rule 34-400 (2):

- Listed and marked for direct burial and in poured concrete
- For containment of 600-volt and lower potential circuits
- Sunlight resistant

### Working Temperatures

-30 ºC to 80 ºC (dry) / 60 ºC (wet) and 70 ºC (oil)

### Listing / Certification

Certified. Conforms to CSA 22.2 No. 56 for use per CEC C22.1 Section 12-1300.

Listed. Conforms to UL Standard ANSI/UL-360 for Liquidtight Flexible Steel Conduit.

### Standard Colours

Machine tool grey, and black. Other colours available upon request. Blue is commonly used for computer room installations.
See TYPE CBLA on p. G8.

# Steel Core

## Type CBLA — Computer Blue

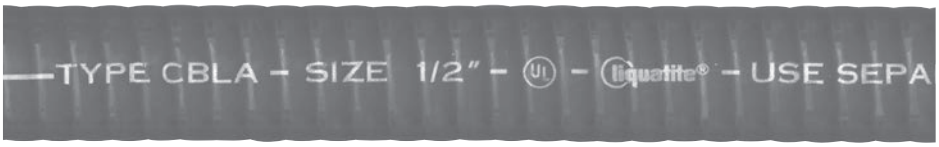


| Trade Size (in.) | Cat. No. | Carton Content* (m) | Cat. No. | Reel Content* (m) | Cat. No. | Reel Content* (m) | Inside Bend Radius | | Weight kg/30m |
|---|---|---|---|---|---|---|---|---|---|
| | | | | | | | in. | (mm) | |
| 3/8 | CBLA038-30 | 30 | CBLA038-150 | 150 | CBLA038-300 | 300 | 2.0 | (50.8) | 13 |
| 1/2 | CBLA050-30 | 30 | CBLA050-150 | 150 | CBLA050-300 | 300 | 3.0 | (76.2) | 15 |
| 3/4 | CBLA075-30 | 30 | CBLA075-150 | 150 | CBLA075-300 | 300 | 4.2 | (106.7) | 24 |
| 1 | CBLA100-30 | 30 | CBLA100-120 | 120 | - | - | 5.5 | (139.7) | 37 |
| 1-1/4 | CBLA125-15 | 15 | CBLA125-60 | 60 | - | - | 7.0 | (177.8) | 46 |
| 1-1/2 | CBLA150-15 | 15 | CBLA150-45 | 45 | - | - | 4.5 | (114.3) | 47 |
| 2 | CBLA200-15 | 15 | CBLA200-30 | 30 | - | - | 6.0 | (152.4) | 66 |
| 2-1/2 | CBLA250-8 | 8 | CBLA250-80 | 80 | - | - | 8.0 | (203.2) | 87 |
| 3 | CBLA300-8 | 8 | CBLA300-50 | 50 | - | - | 10.0 | (254.0) | 114 |
| 3-1/2 | CBLA350-8 | 8 | CBLA350-50 | 50 | - | - | 11.0 | (279.4) | 140 |
| 4 | CBLA400-8 | 8 | CBLA400-30 | 30 | - | - | 12.0 | (304.8) | 154 |

See Chart on p. G28 for dimensions and tolerances
* See p. G27 for label and packaging detail

### Type CBLA

Computer Blue LA is a liquidtight flexible steel conduit commonly used for computer room installations. The blue jacket colour easily identifies circuitry for computer power wiring.

### Construction

CBLA has a flexible inner core made from a spiral wound strip of heavy gauge, hot-dipped galvanized steel. The 3/8 through 1-1/4 inch trade sizes contain an integral bonding strip of copper. The 1-1/2 and larger sizes are designed with a fully interlocked strip.

The jacketing material is a rugged flame retardant flexible blue PVC. For installations which do not allow the use of PVC, see TYPE ZHLA on p. G12.

### Applications

Listed and marked for direct burial and in poured concrete.

### Working Temperatures

-20°C to 60°C

### Listing / Certification

Certified. Conforms to CSA 22.2 No. 56 for use per CEC C22.1 Section 12-1300

Listed. Conforms to UL Standard ANSI/UL-360 for Liquidtight Flexible Steel Conduit

# Steel Core

## Type CSA




| Trade Size (in.) | Cat. No. | Carton Content* (m) | Cat. No. | Reel Content* (m) | Cat. No. | Reel Content* (m) | Inside Bend Radius | | Weight kg/30m |
|---|---|---|---|---|---|---|---|---|---|
| | | | | | | | in. | (mm) | |
| 3/8 | CSA038-30 | 30 | CSA038-150 | 150 | CSA038-300 | 300 | 2.0 | (50.8) | 11 |
| 2.8 1/2 | CSA050-30 | 30 | CSA050-150 | 150 | CSA050-300 | 300 | 3.0 | (76.2) | 16 |
| 3/4 | CSA075-15 | 15 | - | - | | - | - | | |
| 3/4 | CSA075-30 | 30 | CSA075-150 | 150 | CSA075-300 | 300 | 4.0 | (101.6) | 24 |
| 1 | CSA100-30 | 30 | CSA100-120 | - | - | - | 5.0 | (127.0) | 27 |
| 1-1/4 | CSA125-15 | 15 | CSA125-60 | 60 | - | - | 6.2 | (157.5) | 39 |
| 1-1/2 | CSA150-15 | 15 | CSA150-45 | 45 | - | - | 4.5 | (114.3) | 55 |
| 2 | CSA200-15 | 15 | CSA200-30 | 30 | - | - | 6.0 | (152.4) | 70 |
| 2-1/2 | CSA250-8 | 8 | - | - | - | - | 8.0 | (203.2) | 93 |
| 3 | CSA300-8 | 8 | - | - | - | - | 10.0 | (254.0) | 120 |
| 4 | CSA400-8 | 8 | - | - | - | - | 12.0 | (304.8) | 181 |

See Chart on p. G28 for dimensions and tolerances
* See p. G27 for label and packaging detail

### Type CSA

This flexible liquidtight steel conduit is certified CSA. Its design and function is similar to that of type LA except that it cannot be used as a ground return path per CEC. It also offers a wider operating temperature range.

### Construction

The flexible inner core is made from a spiral wound strip of heavy gauge, corrosion resistant, hot-dipped galvanized steel. The 3/8 through 1-1/4 inch trade sizes are cord packed.

The durable PVC flame retardant jacket is designed for good flexibility and impact resistance at low temperatures.

### Applications

This conduit is intended for use according to CEC as described in section 12-1300 for dry, damp or wet locations where flexibility is necessary.

This conduit is intended for installation with Rule 12-1300 of Canadian Electrical Code (CEC) Part I 2009.

The use of a separate bonding conductor is mandatory in accordance with CEC Rule 12-1306 for Ordinary Locations.

The use of Liquidtight Flexible Conduit with sign and Outline Lighting are in accordance with CEC Rule 34-400 (2)

### Working Temperatures

-40°C to 75°C

### Listing / Certification

Certified. Conforms to CSA Standard C22.2, No. 56. Flame Test Rating FT-4 per CSA Standard C22.2, No. 0.3.

### Standard Colour

Black

# Steel Core

## Type ATLA — All Temperature



| Trade Size (in.) | Cat. No. | Carton Content* (m) | Cat. No. | Reel Content* (m) | Cat. No. | Reel Content* (m) | Inside Bend Radius | | Weight kg/30m |
|---|---|---|---|---|---|---|---|---|---|
| | | | | | | | in. | (mm) | |
| 3/8 | ATLA038-30 | 30 | ATLA038-150 | 150 | ATLA038-300 | 300 | 2.0 | (50.8) | 13 |
| 1/2 | ATLA050-30 | 30 | ATLA050-150 | 150 | ATLA050-300 | 300 | 3.0 | (76.2) | 15 |
| 3/4 | ATLA075-30 | 30 | ATLA075-150 | 150 | ATLA075-300 | 300 | 4.2 | (106.7) | 24 |
| 1 | ATLA100-30 | 30 | ATLA100-120 | 120 | - | - | 5.5 | (139.7) | 37 |
| 1-1/4 | ATLA125-15 | 15 | ATLA125-60 | 60 | - | - | 7.0 | (177.8) | 46 |
| 1-1/2 | ATLA150-15 | 15 | ATLA150-45 | 45 | - | - | 4.5 | (114.3) | 47 |
| 2 | ATLA200-15 | 15 | ATLA200-30 | 30 | - | - | 6.0 | (152.4) | 66 |
| 2-1/2 | ATLA250-8** | 8 | - | - | - | - | 8.0 | (203.2) | 87 |
| 3 | ATLA300-8** | 8 | - | - | - | - | 10.0 | (254.0) | 114 |
| 3-1/2 | ATLA350-8** | 8 | - | - | - | - | 11.0 | (279.4) | 140 |
| 4 | ATLA400-8** | 8 | - | - | - | - | 12.0 | (304.8) | 154 |

See Chart on p. G28 for dimensions and tolerances
* See p. G27 for label and packaging detail
** CSA not applicable

### Type ATLA

A liquidtight flexible steel conduit designed specifically for extreme hot or cold environments. The flexible inner core is identical to that found in Type LA. The specially formulated PVC jacket remains flexible at low temperatures and resists ageing at elevated temperatures. It is listed UL and certified CSA.

### Construction

ATLA has a flexible inner core made from a spiral wound strip of heavy gauge, hot-dipped galvanized steel. The 3/8 through 1-1/4 inch trade sizes contain an integral bonding strip of copper. The 1-1/2 and larger sizes are designed with a fully interlocked strip.

The jacketing material is a rugged flame retardant flexible PVC resistant to weathering, UV, oils and many chemicals. Refer to the Conduit — Chemical Resistance Guide beginning on p. G30.

### Applications

Designed to be used with high temperature machine tool wiring. Ideal for outdoor installations in cold
climates. This conduit is intended for installation with Rule 12-1300 of Canadian Electrical Code (CEC) Part I 2002.

The use of a separate bonding conductor is mandatory in accordance with CEC Rule 12-1306 for Ordinary locations.

The use of Liquidtight Flexible Conduit with sign and Outline Lighting are in accordance with CEC Rule 34-400 (2).

- Listed and marked for direct burial and in poured concrete
- For containment of 600-volt and lower potential circuits

### Working Temperatures

-55°C to 105°C Air / 60°C Wet / 70°C Oil

### Listing / Certification

Certified. Conforms to CSA 22.2 No. 56 for use per the CEC C22.1 Section 12-1300

Listed. Conforms to UL Standard ANSI/UL-360 for Liquidtight Flexible Steel Conduit

Conforms to the requirements of Section 16 & 17.7 of the ANSI/NFPA-79 Electrical Standard for Industrial Machinery.

### Standard Colour

Machine tool grey

# Steel Core

## Type AT — High and Low Temperatures




| Trade Size (in.) | Cat. No. | Carton Content* (m) | Cat. No. | Reel Content* (m) | Cat. No. | Reel Content* (m) | Inside Bend Radius | | Weight kg/30m |
|---|---|---|---|---|---|---|---|---|---|
| | | | | | | | in. | (mm) | |
| 3/8 | AT038-30 | 30 | AT038-150 | 150 | AT038-300 | 300 | 1.5 | (38.1) | 9 |
| 1/2 | AT050-30 | 30 | AT050-150 | 150 | AT050-300 | 300 | 2.0 | (50.8) | 11 |
| 3/4 | AT075-30 | 30 | AT075-150 | 150 | AT075-300 | 300 | 2.5 | (63.5) | 15 |
| 1 | AT100-30 | 30 | AT100-120 | 120 | - | - | 3.0 | (76.2) | 24 |
| 1-1/4 | AT125-15 | 15 | AT125-60 | 60 | - | - | 3.5 | (88.9) | 31 |
| 1-1/2 | AT150-15 | 15 | AT150-45 | 45 | - | - | 4.5 | (114.3) | 40 |
| 2 | AT200-15 | 15 | AT200-30 | 30 | - | - | 5.5 | (139.7) | 53 |
| 2-1/2 | AT250-8 | 8 | - | - | - | - | 8.0 | (203.2) | 76 |
| 3 | AT300-8 | 8 | - | - | - | - | 10.0 | (254.0) | 118 |
| 3-1/2 | AT350-8 | 8 | - | - | - | - | 11.0 | (279.4) | 132 |
| 4 | AT400-8 | 8 | - | - | - | - | 12.0 | (304.8) | 156 |
| 5 | AT500-8 | 8 | - | - | - | - | 17.5 | (444.5) | 221 |
| 6 | AT600-8 | 8 | - | - | - | - | 22.5 | (571.5) | 259 |

See Chart on p. G28 for dimensions and tolerances
* See p. G27 for label and packaging detail

### Type AT

A flexible steel conduit which uses a jacketing material specifically designed for hot or cold environments.

### Applications

Type AT is well suited for exposure to extreme climatic conditions. It is also widely used on industrial process equipment such as annealing ovens, lumber kilns, foundries and refrigeration, etc. The construction of this conduit conforms to, and is suitable for use with Sections 16 and 17.7 of the Electrical Standard for Industrial Machinery (ANSI/NFPA-79). Uses standard liquidtight fittings.

### Working Temperatures

-55°C to 105°C intermitting to 120°C

### Standard Colour

Machine tool grey

### Note

For a UL listed and CSA certified version, see TYPE ATLA on p. G10.

## Type ATX — Extreme Temperature




| Trade Size (in.) | Cat. No. | Carton Content* (m) | Cat. No. | Reel Content* (m) | Cat. No. | Reel Content* (m) | Inside Bend Radius | | Weight kg/30m |
|---|---|---|---|---|---|---|---|---|---|
| | | | | | | | in. | (mm) | |
| 3/8 | ATX038-30 | 30 | ATX038-150 | 150 | ATX038-300 | 300 | 1.5 | (38.1) | 10 |
| 1/2 | ATX050-30 | 30 | ATX050-150 | 150 | ATX050-300 | 300 | 2.0 | (50.8) | 12 |
| 3/4 | ATX075-30 | 30 | ATX075-150 | 150 | ATX075-300 | 300 | 2.5 | (63.5) | 18 |
| 1 | ATX100-30 | 30 | ATX100-120 | 120 | - | - | 3.0 | (76.2) | 25 |
| 1-1/4 | ATX125-15 | 15 | ATX125-60 | 60 | - | - | 3.5 | (88.9) | 33 |
| 1-1/2 | ATX150-15 | 15 | ATX150-45 | 45 | - | - | 4.5 | (114.3) | 47 |
| 2 | ATX200-15 | 15 | ATX200-30 | 30 | - | - | 5.5 | (139.7) | 62 |
| 2-1/2 | ATX250-8 | 8 | - | - | - | - | 8.0 | (203.2) | 85 |
| 3 | ATX300-8 | 8 | - | - | - | - | 10.0 | (254.0) | 111 |
| 4 | ATX400-8 | 8 | - | - | - | - | 12.0 | (304.8) | 151 |

See Chart on p. G28 for dimensions and tolerances
* See p. G27 for label and packaging detail

### Type ATX

A conduit designed to withstand an extreme temperature range.

### Construction

Utilizes the flexibility of our standard LT core, coupled with the advantage of a thermoplastic rubber jacket that is virtually unaffected by temperature extremes and contains no halogens. The material has a UL 94-HB flammability rating.

### Applications

Used in situations where there are concerns of resistance to temperature exposure. These include heavy outdoor equipment, boilers and furnaces, etc. Refer to the Conduit — Chemical Resistance Guide beginning on p. G30.

### Working Temperatures

-60°C to 150°C intermitting to 165°C

### Standard Colour

Black

# Steel Core

## Type ZHLA — Non-Halogen, Low Smoke, Flame Retardant




| Trade Size (in.) | Cat. No. | Carton Content* (m) | Cat. No. | Reel Content* (m) | Cat. No. | Reel Content* (m) | Inside Bend Radius | | Weight kg/30m |
|---|---|---|---|---|---|---|---|---|---|
| | | | | | | | in. | (mm) | |
| 3/8 | ZHLA038-30 | 30 | ZHLA038-150 | 150 | ZHLA038-300 | 300 | 2.0 | (50.8) | 13 |
| 1/2 | ZHLA050-30 | 30 | ZHLA050-150 | 150 | ZHLA050-300 | 300 | 3.0 | (76.2) | 15 |
| 3/4 | ZHLA075-30 | 30 | ZHLA075-150 | 150 | ZHLA075-300 | 300 | 4.2 | (106.7) | 24 |
| 1 | ZHLA100-30 | 30 | ZHLA100-120 | 120 | - | - | 5.5 | (139.7) | 37 |
| 1-1/4 | ZHLA125-15 | 15 | ZHLA125-60 | 60 | - | - | 7.0 | (177.8) | 46 |
| 1-1/2 | ZHLA150-15 | 15 | ZHLA150-45 | 45 | - | - | 4.5 | (114.3) | 47 |
| 2 | ZHLA200-15 | 15 | ZHLA200-30 | 30 | - | - | 6.0 | (152.4) | 66 |
| 2-1/2 | ZHLA250-8 | 8 | - | - | - | - | 8.0 | (203.2) | 87 |
| 3 | ZHLA300-8 | 8 | - | - | - | - | 10.0 | (254.0) | 114 |
| 3-1/2 | ZHLA350-8 | 8 | - | - | - | - | 11.0 | (279.4) | 140 |
| 4 | ZHLA400-8 | 8 | - | - | - | - | 12.0 | (304.8) | 154 |

See Chart on p. G28 for dimensions and tolerances
* See p. G27 for label and packaging detail

## Type ZHLA Combustion & Flammability Properties

| Combustion & Flammability Properties** | Test | Value |
|---|---|---|
| -Vertical Burn (Material) | UL94 | V-0 Rating |
| | | No Flaming Drips |
| -Vertical Burn (Conduit) | UL360 | Pass |
| | | No Flaming Drips |
| -Oxygen Index % | D2863 | 28.5 |
| -Flame Spread Index | ASTM E162 | 20; |
| | | No Flaming Drips |
| -Flame Propagation | ASTM C542 | Pass |
| | (NFPA-130) | No Flaming Drips |
| -Smoke Generation (Flaming) | ASTM E662 | Ds 50 @ 1.5 min |
| | (NFPA 258) | Ds 102 @ 4.0 min |
| -Smoke Generation (Non-Flaming) | ASTM E662 | Ds 5 @ 1.5 min |
| | (NFPA 258) | Ds 26 @ 4.0 min |
| -Toxic Gas Generation | BOMBARDIER SMP 800-C | Pass |
| -Toxicity Index | NES 713 | 3.9 |

**Test data is based on controlled laboratory conditions and does not necessarily reflect performance in actual fire conditions
Additional product information available upon request

### Type ZHLA

Non-halogen, low smoke and low flame spread are what makes Type ZHLA a proven choice for applications where limiting toxic combustion materials is an important issue. Since ZHLA is also UL Listed, it is ideal for field installation in confined, public areas such as subways, tunnels, etc.

### Construction

ZHLA has a flexible inner core made from a spiral wound strip of heavy gauge, hot-dipped galvanized steel. The 3/8 in. through 1-1/4 in. trade sizes contain an integral bonding strip of copper. The 1-1/2 in. and larger sizes are designed with a fully interlocked strip. The specially formulated thermoplastic black polyurethane jacket has excellent flame resistance and low smoke and toxicity generation characteristics. It is also resistant to ozone, hydrocarbons, moderate chemicals, oils and fuels. Refer to the Conduit — Chemical Resistance Guide beginning on p. G30.

### Applications

There are many situations and areas where PVC is not allowed for electrical construction. The jacketing material used for ZHLA virtually eliminates the release of acidic gases found in PVC products.

- Meets the requirements of Bombardier SMP 800-C for Toxic Gas Generation
- Meets the requirements of both ASTM E162 for Flame Spread and ASTM E662 for Smoke Generation.
- Listed and marked for direct burial and in poured concrete.
- For containment of 600 V and lower potential circuits.
- Sunlight resistant

### Working Temperatures

-40°C to 80°C Air / 60°C Wet / 70°C Oil

### Listing / Certification

Certified. Conforms to CSA 22.2 No. 56 for use per the CEC C22.1 Section 12-1300

Listed. Conforms to UL Standard ANSI/ UL-360 for Liquidtight Flexible Steel Conduit

### Standard Colour

Black

# Steel Core

## Type CEA — Non-Halogen, Low Smoke, Flame Retardant




| Trade Size (in.) | Cat. No. | Carton Content* (m) | Cat. No. | Reel Content* (m) | Minimum Jacket Thickness | Inside Bend Radius | | Weight kg/30m |
|---|---|---|---|---|---|---|---|---|
| | | | | | | in. | (mm) | |
| 3/8 | CEA038-30 | 30 | CEA038-150 | 150 | 300 | 1.5 | (38.1) | 9 |
| 1/2 | CEA050-30 | 30 | CEA050-150 | 150 | 300 | 2.0 | (50.8) | 11 |
| 3/4 | CEA075-30 | 30 | CEA075-150 | 150 | 300 | 2.5 | (63.5) | 15 |
| 1 | CEA100-30 | 30 | CEA100-120 | 120 | - | 3.0 | (76.2) | 24 |
| 1-1/4 | CEA125-15 | 15 | CEA125-60 | 60 | - | 3.5 | (88.9) | 31 |
| 1-1/2 | CEA150-15 | 15 | CEA150-45 | 45 | - | 4.5 | (114.3) | 40 |
| 2 | CEA200-15 | 15 | CEA200-30 | 30 | - | 5.5 | (139.7) | 53 |
| 2-1/2 | CEA250-8 | 8 | - | - | - | 8.0 | (203.2) | 76 |
| 3 | CEA300-8 | 8 | - | - | - | 10.0 | (254.0) | 118 |
| 3-1/2 | CEA350-8 | 8 | - | - | - | 11.0 | (279.4) | 132 |
| 4 | CEA400-8 | 8 | - | - | - | 12.0 | (304.8) | 156 |
| 5 | CEA500-8** | 8 | - | - | 2.5 | 17.5 | (444.5) | 212 |
| 6 | CEA600-8** | 8 | - | - | 2.5 | 22.5 | (635.0) | 259 |

See Chart on p. G28 for dimensions and tolerances
* See p. G27 for label and packaging detail
**Available on request
Type ACEA also available (liquidtight flexible aluminum conduit)
Aluminum core weighs approximately one third less than steel core

## Type CEA Combustion & Flammability Properties

| Combustion & Flammability Properties** | Test | Value |
|---|---|---|
| -Vertical Burn (Material) | UL94 | V-0 Rating |
| | | No Flaming Drips |
| | | |
| -Vertical Burn (Conduit) | UL360 | Pass |
| | | No Flaming Drips |
| | | |
| -Oxygen Index % | D2863 | 28.5 |
| | | |
| -Flame Spread Index | ASTM E162 | 20; |
| | | No Flaming Drips |
| | | |
| -Flame Propagation | ASTM C542 | Pass |
| | (NFPA-130) | No Flaming Drips |
| | | |
| -Smoke Generation (Flaming) | ASTM E662 | Ds 50 @ 1.5 min |
| | (NFPA 258) | Ds 102 @ 4.0 min |
| | | |
| -Smoke Generation (Non-Flaming) | ASTM E662 | Ds 5 @ 1.5 min |
| | (NFPA 258) | Ds 26 @ 4.0 min |
| | | |
| -Toxic Gas Generation | BOMBARDIER SMP 800-C | Pass |
| | | |
| -Toxicity Index | NES 713 | 3.9 |

**Test data is based on controlled laboratory conditions and does not necessarily reflect performance in actual fire conditions
Additional product information available upon request

### Type CEA

This liquidtight flexible steel conduit is designed for applications where safety concerns exist regarding a material's reaction in a fire situation.

### Construction

The flexible inner core of this product is made from a galvanized steel strip. As in type LT, this core contains string packing between the helical convolutions in trade sizes 3/8 in. through 2 in. The specially formulated thermoplastic polyurethane jacket has excellent flame retardant characteristics as well as low smoke and toxicity generation characteristics. Acidic gases such as hydrogen chloride, hydrogen fluoride and hydrogen bromide are virtually eliminated as products of combustion.

### Applications

This product is ideally suited for installation in confined or enclosed areas where construction materials must generate very little smoke, and have a low flame spread as well as low toxic gas emissions in the event of fire. Such applications include mass transit vehicles where CEA is extensively used for wiring harnesses within and under passenger rail cars. Other applications include use in underground subway structures and tunnels.

### Working Temperatures

-40°C to 80°C

### Standard Colours

Grey and black. Other colours available upon request. Part numbers listed designate grey jacket.

# Steel Core

## Type BR



### Type BR

This non-jacketed flexible steel conduit has many universal wiring applications. It is often referred to as "Greenfield" or "Reduced Wall Flex".

### Construction

Type BR is formed from high corrosion resistant hot-dipped galvanized steel. Its profile and helical shape allow it to withstand impact and crushing forces.

### Applications

General Use: In accordance with CEC Rule 12-1002 (1) the flexible metal conduit is permitted in or on buildings of either combustible or non-combustible constructions.

### Restriction and Exception:

CEC Rule 12-1004 (a) states:"12 (3/8) trade size flexible metal conduit shall be permitted to be used for runs of not more than 1.5 m (5 ft.) for the connection of equipment." and CEC Rule 12-1004 (b) states:"12 (3/8) trade size liquidtight flexible conduit may be used as permitted by this code."

### Securements with straps:

CEC Rule 12-1010 (3) states: "When flexible metal conduit is installed, it shall be secured at intervals not exceeding 1.5 m (5 ft.) and within 300 mm (12 in.) on each side of every outlet box or fitting except where flexible metal conduit is fished and except for lengths of not over 900 mm (3 ft) at terminals where flexibility is necessary."

### Conductor fill:

CEC Rule 12-1014 defines the maximum number of conductor, the CEC Tables 6 provides the maximum number of conductors of one size in trade sizes of conduit, CEC Table 8 provides the maximum allowable per cent conduit fill, and CEC Table 9 provides the cross-sectional areas of conduit.

### Specific Use and applications:

Elevators, Hoistways, in accordance with CEC Rules 38-021 (1) (a) (1) and 38-021 (1) (a) (iv) Elevators, Cars, in accordance with CEC Rules 38-021 (1) (b) (v) Elevators, Within Machine Rooms, Control Rooms and Machinery Spaces and Control Spaces, in accordance with CEC Rule 38-021 (1) (c) (i) Elevators, Conterweights, in accordance with CEC Rule 38-021 (1) (d) Escalators, in accordance with CEC Rule 38-021 (2) Lifts for persons with physical disabilities, in accordance with CEC Rule 38-021 (3) Theater installation, in accordance with CEC Rule 44-102 (1)

### Listing / Certification

Certified. (3/8 inch size only). Conforms to CSA 22.2 No. 56 for use per CEC C22.1 Section 12-1000. Meets Federal Specification WW-C-566c Type II

Listed. (sizes 3/8 through 3 in.). Conforms to UL Standard ANSI/UL-1 for Flexible Metal Conduit.

Flexible metal conduit is also permitted for use on industrial machinery where temperatures exceed the limits of liquidtight flexible conduit. (ANSI/NFPA-79) Section 16.3.4 (exception) and Section 17.9.

| Trade Size (in.) | Cat. No. | Inner Diameter | | | | Outer Diameter | | | |
|---|---|---|---|---|---|---|---|---|---|
| | | min. | | max. | | min. | | max. | |
| | | in. | (mm) | in. | (mm) | in. | (mm) | in. | (mm) |
| 3/8 | BR038* | 0.375 | (9.5) | 0.393 | (10.0) | 0.560 | (14.2) | 0.610 | (15.5) |
| 1/2 | BR050 | 0.625 | (15.9) | 0.645 | (16.4) | 0.860 | (21.8) | 0.920 | (23.4) |
| 3/4 | BR075 | 0.812 | (20.6) | 0.835 | (21.2) | 1.045 | (26.5) | 1.105 | (28.1) |
| 1 | BR100 | 1.000 | (25.4) | 1.040 | (26.4) | 1.300 | (33.0) | 1.380 | (35.1) |
| 1-1/4 | BR125 | 1.250 | (31.8) | 1.300 | (33.0) | 1.550 | (39.4) | 1.630 | (41.4) |
| 1-1/2 | BR150 | 1.500 | (38.1) | 1.575 | (40.0) | 1.850 | (47.0) | 1.950 | (49.5) |
| 2 | BR200 | 2.000 | (50.8) | 2.080 | (52.8) | 2.350 | (59.7) | 2.454 | (62.3) |
| 2-1/2 | BR250 | 2.500 | (63.5) | 2.700 | (68.6) | 2.860 | (72.6) | 3.060 | (77.7) |
| 3 | BR300 | 3.000 | (76.2) | 3.200 | (81.3) | 3.360 | (85.3) | 3.560 | (90.4) |
| 3-1/2 | BR350 | 3.500 | (88.9) | - | - | 3.860 | (98.0) | 4.060 | (103.1) |
| 4 | BR400 | 4.000 | (101.6) | - | - | 4.360 | (110.7) | 4.560 | (115.8) |

* CSA Certified

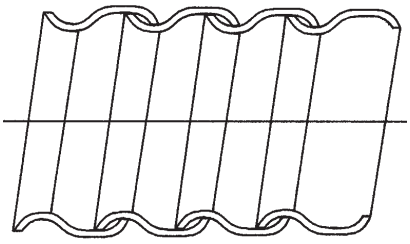

**Types BR and ABR Strip Profile**

| Trade Size (in.) | Cat. No. | Coil Content (m) | Cat. No. | Coil Content (m) | Cat. No. | Coil Content (m) | Cat. No. | Coil Content (m) | Cat. No. | Coil Content (m) | Inside Bend Radius | | Weight kg/30m |
|---|---|---|---|---|---|---|---|---|---|---|---|---|---|
| | | | | | | | | | | | (in.) | (mm) | |
| 3/8 | BR038-8* | 8 | BR038-15* | 15 | BR038-30* | 30 | BR038-75* | 75 | BR038-300* | 300 | 2.0 | (50.8) | 18 |
| 1/2 | BR050-8 | 8 | BR050-15 | 15 | BR050-30 | 30 | - | - | BR050-300 | 300 | 3.0 | (76.2) | 13 |
| 3/4 | BR075-8 | 8 | BR075-15 | 15 | BR075-30 | 30 | - | - | BR075-150 | 150 | 4.0 | (101.6) | 15 |
| 1 | - | - | BR100-15 | 15 | - | - | - | - | BR100-120 | 120 | 5.0 | (127.0) | 24 |
| 1-1/4 | - | - | BR125-15 | 15 | - | - | - | - | BR125-120 | 120 | 6.2 | (157.5) | 29 |
| 1-1/2 | - | - | BR150-8 | 8 | - | - | - | - | BR150-90 | 90 | 7.5 | (190.5) | 36 |
| 2 | - | - | BR200-8 | 8 | - | - | - | - | BR200-45 | 45 | 10.0 | (254.0) | 45 |
| 2-1/2 | - | - | BR250-8 | 8 | - | - | - | - | - | - | 12.5 | (317.5) | 68 |
| 3 | - | - | BR300-8 | 8 | - | - | - | - | - | - | 15.0 | (381.0) | 82 |
| 3-1/2 | - | - | BR350-8 | 8 | - | - | - | - | - | - | 17.5 | (444.5) | 100 |
| 4 | - | - | BR400-8 | 8 | - | - | - | - | - | - | 20.0 | (508.0) | 122 |

* CSA Certified

# Steel

## Type SL



| Trade Size | | Cat. No. | Coil Content (m) | Inner Diameter | | | | Outer Diameter | | | | Min. Inside Bend Radius | | Weight kg/30m |
|---|---|---|---|---|---|---|---|---|---|---|---|---|---|---|
| | | | | min. | | max. | | min. | | max. | | | | |
| in. | (mm) | | | in. | (mm) | in. | (mm) | in. | (mm) | in. | (mm) | in. | (mm) | |
| - | - | SL316-75 | 75 | 0.172 | (4.35) | 0.202 | (5.13) | 0.280 | (7.11) | 0.310 | (7.87) | 0.75 | (19.5) | 2 |
| - | - | SL140-75 | 75 | 0.235 | (5.97) | 0.265 | (6.73) | 0.328 | (8.33) | 0.358 | (9.09) | 0.75 | (19.5) | 3 |
| 5/16 | - | SL516-75 | 75 | 0.297 | (7.54) | 0.327 | (8.31) | 0.391 | (9.93) | 0.421 | (10.69) | 0.75 | (19.5) | 3 |
| - | - | SL380-75 | 75 | 0.360 | (9.14) | 0.390 | (9.91) | 0.485 | (12.32) | 0.515 | (13.08) | 1.00 | (25.4) | 4 |
| - | - | SL716-75 | 75 | 0.422 | (10.72) | 0.452 | (11.48) | 0.547 | (13.89) | 0.577 | (14.66) | 1.00 | (25.4) | 4 |
| 3/8 | 16 | SL038-75 | 75 | 0.492 | (12.50) | 0.512 | (13.00) | 0.617 | (15.67) | 0.637 | (16.18) | 1.00 | (25.4) | 5 |
| - | - | SL916-45 | 45 | 0.547 | (13.89) | 0.577 | (14.66) | 0.672 | (17.07) | 0.702 | (17.83) | 1.25 | (31.8) | 5 |
| 1/2 | - | SL050-45 | 45 | 0.622 | (15.80) | 0.642 | (16.31) | 0.747 | (18.97) | 0.767 | (19.48) | 1.50 | (38.1) | 7 |
| - | 20 | SL050M-45 | 45 | 0.650 | (16.51) | 0.670 | (17.01) | 0.775 | (19.69) | 0.795 | (20.19) | 1.50 | (38.1) | 7 |
| - | - | SL340-45 | 45 | 0.735 | (18.67) | 0.765 | (19.43) | 0.865 | (21.97) | 0.895 | (22.73) | 1.50 | (38.1) | 8 |
| 3/4 | 25 | SL075-30 | 30 | 0.827 | (21.00) | 0.847 | (21.51) | 0.957 | (24.31) | 0.977 | (24.82) | 2.00 | (50.8) | 8 |
| 1 | - | SL100-15 | 15 | 1.041 | (26.44) | 1.066 | (27.07) | 1.181 | (30.00) | 1.206 | (30.63) | 2.00 | (50.8) | 9 |
| - | 32 | SL100M-15 | 15 | 1.102 | (27.99) | 1.122 | (28.50) | 1.242 | (31.55) | 1.262 | (32.05) | 2.00 | (50.8) | - |

### Type SL

This “extra-flexible” product, available in the smaller diameters, is designed for tightspot installation and where continuous flexing is required of a steel wound hose.

### Construction

Type SL is helically wound from a formed strip of Electrogalvanized steel. It is sized to be used with a variety of set-screw and clamp type fittings.

### Applications

Offers good mechanical protection to wiring in a variety of O.E.M. applications

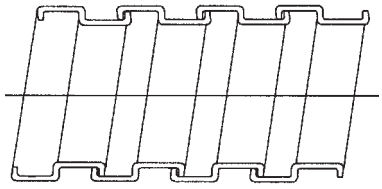

**Squarelock**

## Type UG



| Cat. No. | Coil Content (m) | Inside Diameter | | Outer Diameter Min. Inside | | Bend Radius | | Wt. kg/30m |
|---|---|---|---|---|---|---|---|---|
| | | Min. | Max. | Min. | Max. | | | |
| | | in. (mm) | in. (mm) | in. (mm) | in. (mm) | in. | (mm) | |
| UG380-15 | 15 | 0.443(11.25) | 0.473(12.01) | 0.563(14.30) | 0.593(15.06) | 2.5 | (63.5) | 7 |
| UG120-15 | 15 | 0.755(19.18) | 0.785(19.94) | 0.875(22.23) | 0.905(22.99) | 3.0 | (76.2) | 10 |
| UG340-15 | 15 | 0.943(23.95) | 0.973(24.71) | 1.063(28.70) | 1.093(27.76) | 3.5 | (89.0) | 14 |
| UG100-15 | 15 | 1.208(30.68) | 1.238(31.45) | 1.328(33.73) | 1.358(34.50) | 4.5 | (114.3) | 16 |
| UG125-15 | 15 | 1.485(37.72) | 1.515(38.48) | 1.578(40.08) | 1.608(40.84) | 5.5 | (139.7) | 23 |
| UG150-15 | 15 | 1.735(44.07) | 1.765(44.83) | 1.843(46.81) | 1.873(47.57) | 6.5 | (165.1) | 27 |
| UG200-15 | 15 | 2.235(56.77) | 2.265(57.53) | 2.390(60.71) | 2.420(61.47) | 8.5 | (216.0) | 36 |
| UG280-15 | 15 | 2.735(69.47) | 2.765(70.23) | 2.937(74.60) | 2.967(75.36) | 10.5 | (267.0) | 39 |
| UG300-15 | 15 | 3.360(85.34) | 3.390(86.11) | 3.438(87.33) | 3.468(88.09) | 13.0 | (330.2) | 48 |

Note: Trade sizes do not apply to Type UG

### Type UG

A fully-interlocked flexible steel conduit designed for high strength in “tight-spot” installations.

### Construction

This conduit is manufactured from a bright tin plated steel strip which is fully interlocked at the edges to produce a strong, yet flexible product. The interlock feature does not allow the conduit to unravel if twisted and permits the conduit to retain its shape when bent. This lightweight product is compatible with many set-screw and clamp type fittings.

### Applications

The bright appearance of the finished product lends itself to installations where the conduit may be visible after final assembly.

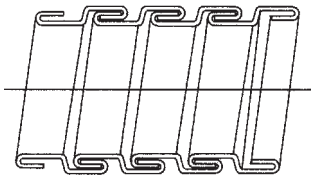

**Interlock**

# Steel Core

## Type USL



| Cat. No. | Inner Dia. | | Outer Dia. | | Cat. No. | Coil Content (m) | Min. Inside Bend Radius | | Wt. kg/30m |
|---|---|---|---|---|---|---|---|---|---|
| | Min. | Max. | Min. | Max. | | | | | |
| | in. (mm) | in. (mm) | in. (mm) | in. (mm) | | | in. | (mm) | |
| USL516 | 0.297(7.54) | 0.327(8.30) | 0.457(11.60) | 0.487(12.37) | USL516-75 | 75 | 1.25 | (31.75) | 5 |
| USL380 | 0.360(9.14) | 0.390(9.91) | 0.520(13.20) | 0.550(13.97) | USL380-75 | 75 | 1.25 | (31.75) | 6 |
| USL716 | 0.422(10.7) | 0.452(11.48) | 0.582(14.78) | 0.612(15.54) | USL716-75 | 75 | 1.50 | (38.10) | 7 |
| USL120 | 0.485(12.3) | 0.515(13.08) | 0.645(15.86) | 0.675(17.15) | USL120-75 | 75 | 1.50 | (38.10) | 8 |
| USL916 | 0.557(14.1) | 0.577(14.65) | 0.707(17.96) | 0.737(18.72) | USL916-75 | 75 | 1.50 | (38.10) | 9 |

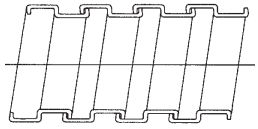

**Squarelock — Type USL**

### Type USL

This extra-flexible steel conduit is recognized UL and CSA for use within listed and certified assemblies.

### Construction

Helically formed from hot-dipped galvanized steel, type USL offers good corrosion resistance and provides excellent mechanical protection to enclosed circuits.

### Applications

This product is intended as a factory installed component of various assemblies. Typical uses include modular office partitions, showcase lighting, range tops and other appliances. For component applications within Canada, ask for CSA Report #LO 4000-4875.

### Listing / Certification

UL Recognized File #E53253

## Type VJC — with PVC Jacket



| Trade Size (in.) | Cat. No. | Carton Content* (m) | Outside Dia. Over Jacket | | | | Internal Bend radius | | | | Wt. kg/30m |
|---|---|---|---|---|---|---|---|---|---|---|---|
| | | | Min. | | Max. | | Min. | | Max | | |
| | | | in. | (mm) | in. | (mm) | in. | (mm) | in. | (mm) | |
| 3/8 | VJC038-30 | 30 | 0.647 | (16.43) | 0.677 | (17.20) | 1.0 | (25.4) | 5 | (127.0) | 5 |
| 1/2 | VJC050-30 | 30 | 0.777 | (19.74) | 0.807 | (20.50) | 1.5 | (38.1) | 6 | (152.4) | 7 |
| - | VJC050M-30 | 30 | 0.805 | (20.45) | 0.835 | (21.21) | 1.5 | (38.1) | 6 | (152.4) | 7 |
| 3/4 | VJC075-30 | 30 | 0.987 | (25.07) | 1.017 | (25.83) | 2.0 | (51.0) | 10 | (254.0) | 9 |
| 1 | VJC100-30 | 30 | 0.221 | (5.61) | 1.246 | (31.65) | 3.0 | (76.0) | 10 | (254.0) | 11 |
| - | VJC100M-30 | 30 | 1.272 | (32.31) | 1.302 | (33.07) | 3.0 | (76.0) | 10 | (254.0) | - |

* Reels available, consult your Regional Sales Office

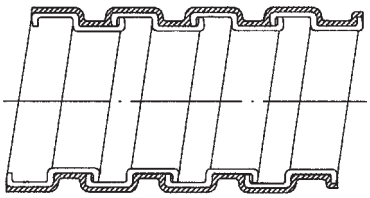

### Type VJC

Vacuum jacketed steel conduit for high-flex installations

### Construction

A unique vacuum extrusion process allows this product to have a thin PVC jacket which does not restrict the great flexibility characteristics of the inner core. The core material is the same as type SL. VJC is designed with dimensions that will accept standard liquid-tight fittings.

### Applications

VJC is suitable for use in both static applications where a tight bend diameter is needed and in dynamic use such as machining centers and robotics.

### Working Temperatures

-20°C to 80°C

### Standard Colour

Black. Other colours available upon request. Consult your Regional Sales Office for details.

# 3F Condulet® Conduit Outlet Boxes With Covers

## GUA Series

Cl. I, Div. 1 & 2, Groups B*, C, D
Cl. II, Div. 1, Groups E, F, G
Cl. II, Div. 2, Groups F, G
Cl. III
NEMA 3, 4, 7CD, 9EFG

Explosionproof
Dust-Ignitionproof
Raintight
Wet Locations

## Applications:

GUA series conduit outlet boxes are installed within hazardous area conduit systems to:

- Protect conductors in threaded rigid conduit
- Act as pull and splice boxes
- Connect lengths of conduit
- Change conduit direction
- Provide access to conductors for maintenance and future system changes
- Act as mounting outlets for fixtures (with appropriate covers)
- Act as sealing fittings (with appropriate covers)

## Features:

GUA conduit boxes have:

- Neoprene "O" ring standard to meet NEMA 4 requirements
- Cast ears on cover to permit easy removal and tightening
- Internal green ground screw
- Four standard mounting pads except for boxes with bottom hubs
- Threaded cover openings
- Ten different hub arrangements
- Taper threaded hubs to provide grounding continuity
- Smooth integral hub bushing protects conductor insulation when pulling
- Surface covers furnished with boxes
- Sealing covers, dome covers, and fixture hanger covers are available
- Cover threads are 12 pitch standard, 16 pitch on select aluminum shapes and sizes

## Certifications and Compliances:

- NEC/CEC:
  - Class I, Division 1 & 2, Groups B*, C, D
  - Class II, Division 1, Groups E, F, G
  - Class II, Division 2, Groups F, G
  - Class III
- UL Standard: 1203
- ANSI Standard: C33.27
- CSA Standard: C22.2 No. 30
- NEMA/EEMAC 3, 4

## Standard Materials:

- Bodies – *Feraloy* iron alloy
- Covers – Copper-free aluminum

## Standard Finishes:

- *Feraloy* iron alloy – electrogalvanized and aluminum acrylic paint
- Aluminum – natural

## Size Ranges:

- Hub – ½" to 2"
- Cover opening – 2" to 5" dia.

## Options:

| Description | Suffix |
|---|---|
| • Bodies – copper-free aluminum | **SA†** |
| • Covers – *Feraloy* iron alloy – electrogalvanized and aluminum acrylic paint | **WOD** |
| • GUA Form 6 (with 3" cover opening) are available with optional cover with viewing window | **VW** |
| • *Corro-free*™ epoxy powder coat | **S752** |
| • To order box less cover, add "0" to end of catalog number (i.e. GUAT260) | |
| • Factory installed terminal blocks mounted to DIN Rail (see page 53 for ordering information) | **DIN12-112** |
| • Factory installed terminal blocks directly mounted to outlet box (see page 53 for ordering information | **TB14-112** |

When assembled with sealing type cover, GUA series outlet boxes provide adequate sealing for 40% fill in hazardous areas – Class I, Groups C, D; Class II, Groups E, F, G; and Class III. Seals can be made in either horizontal or vertical positions. Use *Chico*® "A" sealing compound or *Chico*® SpeedSeal only. Conductor splices or connections must not be made in enclosures where sealing compound is to be used per NEC.

## GUA



| Hub Size | Cover Opening Dia. | Cat. # |
|---|---|---|
| ½ | 2 | **GUA14** |
| ¾ | 2 | **GUA24** |
| ½ | 3 | **GUA16** |
| ¾ | 3 | **GUA26†*** |
| 1 | 3 | **GUA36** |
| 1¼ | 3⅝ | **GUA47** |
| 1½ | 5 | **GUA59** |

## GUAC



| Hub Size | Cover Opening Dia. | Cat. # |
|---|---|---|
| ½ | 2 | **GUAC14†** |
| ¾ | 2 | **GUAC24†** |
| ½ | 3 | **GUAC16†*** |
| ¾ | 3 | **GUAC26†*** |
| 1 | 3 | **GUAC36†*** |
| 1¼ | 3⅝ | **GUAC47†** |
| 1¼ | 5 | **GUAC49†*** |
| 1½ | 5 | **GUAC59†*** |
| 2 | 5 | **GUAC69†*** |

3.1

†Available in copper-free aluminum, add suffix -SA.
*When ordered with suffix -SA are listed for Class I, Division 1 & 2, Groups B, C and D, Class II, Division 1, Groups E, F, G and Class III. Covers have 16 pitch threads. Replacement cover is a GUA06-GB.

## GUAB



| Hub Size | Cover Opening Dia. | Cat. # |
|---|---|---|
| ½ | 2 | **GUAB14†** |
| ¾ | 2 | **GUAB24** |
| ½ | 3 | **GUAB16†*** |
| ¾ | 3 | **GUAB26†*** |
| 1 | 3 | **GUAB36†*** |
| 1¼ | 3⅝ | **GUAB47†** |
| 1½ | 5 | **GUAB59†*** |
| 2 | 5 | **GUAB69†*** |

## GUAD

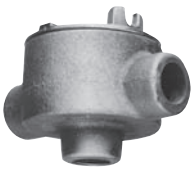

| Hub Size | Cover Opening Dia. | Cat. # |
|---|---|---|
| ½ | 2 | **GUAD14** |
| ¾ | 2 | **GUAD24** |
| ½ | 3 | **GUAD16** |
| ¾ | 3 | **GUAD26†** |
| 1 | 3 | **GUAD36†** |
| 1¼ | 5 | **GUAD49** |

## Dimensions
### In Inches:

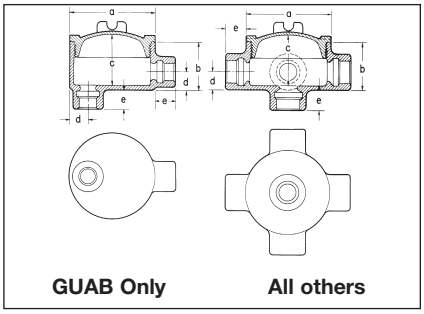

**GUAB Only** **All others**

## GUA, GUAD, GUAM, GUAW, GUAX

| Cat. # | a | b | c | d |
|---|---|---|---|---|
| **14** | 2½ | 1 13/16 | 1¾ | ⅝ |
| **24** | 2½ | 2 | 2 | ¾ |
| **16** | 3½ | 2 | 1⅞ | ⅝ |
| **26** | 3½ | 2 | 1⅞ | ¾ |
| **36** | 3½ | 2 5/16 | 2 3/16 | ⅞ |
| **37** | 4¼ | 2 5/16 | 2⅜ | ⅞ |
| **47** | 4¼ | 2 11/16 | 2¾ | 1 3/32 |
| **49** | 5¾ | 3 13/16 | 3¾ | 1 3/32 |
| **59** | 5¾ | 3 13/16 | 3¾ | 1 9/32 |
| **69** | 5¾ | 4 1/16 | 4 | 1 9/16 |

| Length of Hub Hub Size | Dimension "e" Length |
|---|---|
| ½ - ¾ | ⅞ |
| 1 – 1¼ | 1 |
| 1½ – 2 | 1 1/16 |

 Copyright© 2015 Eaton's Crouse-Hinds Business

Crouse-Hinds by EATON

# Condulet® Conduit Outlet Boxes With Covers

## GUA Series

Cl. I, Div. 1 & 2, Groups B*, C, D
Cl. II, Div. 1, Groups E, F, G
Cl. II, Div. 2, Groups F, G
Cl. III
NEMA 3, 4, 7CD, 9EFG

Explosionproof
Dust-Ignitionproof
Raintight
Wet Locations





## GUAL



| Hub Size | Cover Opening Dia. | Cat. # |
|---|---|---|
| 1/2 | 2 | **GUAL14†** |
| 3/4 | 2 | **GUAL24†** |
| 1/2 | 3 | **GUAL16†*** |
| 3/4 | 3 | **GUAL26†*** |
| 1 | 3 | **GUAL36†*** |
| 1 1/4 | 3 5/8 | **GUAL47†** |
| 1 1/4 | 5 | **GUAL49†*** |
| 1 1/2 | 5 | **GUAL59†*** |
| 2 | 5 | **GUAL69†*** |

## GUAN



| Hub Size | Cover Opening Dia. | Cat. # |
|---|---|---|
| 1/2 | 2 | **GUAN14** |
| 3/4 | 2 | **GUAN24** |
| 1/2 | 3 | **GUAN16** |
| 3/4 | 3 | **GUAN26** |
| 1 | 3 | **GUAN36** |
| 1 1/4 | 3 5/8 | **GUAN47** |
| 1 1/2 | 5 | **GUAN59** |
| 2 | 5 | **GUAN69** |

## GUAT



| Hub Size | Cover Opening Dia. | Cat. # |
|---|---|---|
| 1/2 | 2 | **GUAT14†** |
| 3/4 | 2 | **GUAT24†** |
| 1/2 | 3 | **GUAT16†*** |
| 3/4 | 3 | **GUAT26†*** |
| 1 | 3 | **GUAT36†*** |
| 1 | 3 5/8 | **GUAT37** |
| 1 1/4 | 3 5/8 | **GUAT47†** |
| 1 1/4 | 5 | **GUAT49†*** |
| 1 1/2 | 5 | **GUAT59†*** |
| 2 | 5 | **GUAT69†*** |

## GUAX



| Hub Size | Cover Opening Dia. | Cat. # |
|---|---|---|
| 1/2 | 2 | **GUAX14** |
| 3/4 | 2 | **GUAX24** |
| 1/2 | 3 | **GUAX16†*** |
| 3/4 | 3 | **GUAX26†*** |
| 1 | 3 | **GUAX36†*** |
| 1 | 3 5/8 | **GUAX37†** |
| 1 1/4 | 3 5/8 | **GUAX47†** |
| 1 1/4 | 5 | **GUAX49†*** |
| 1 1/2 | 5 | **GUAX59†*** |
| 2 | 5 | **GUAX69†*** |

## GUAM



| Hub Size | Cover Opening Dia. | Cat. # |
|---|---|---|
| 1/2 | 2 | **GUAM14** |
| 3/4 | 2 | **GUAM24** |
| 1/2 | 3 | **GUAM16** |
| 3/4 | 3 | **GUAM26** |
| 1 | 3 | **GUAM36** |
| 1 1/4 | 3 5/8 | **GUAM47** |
| 2 | 5 | **GUAM69** |

## GUAW



| Hub Size | Cover Opening Dia. | Cat. # |
|---|---|---|
| 1/2 | 2 | **GUAW14** |
| 3/4 | 2 | **GUAW24†** |
| 1/2 | 3 | **GUAW16** |
| 3/4 | 3 | **GUAW26†*** |

## Dimensions

### GUAC, GUAT

| Cat. # | a | b | c | d |
|---|---|---|---|---|
| **14** | 2 1/2 | 2 1/4 | 2 3/16 | 5/8 |
| **24** | 2 1/2 | 2 | 2 | 3/4 |
| **16** | 3 1/2 | 2 | 1 7/8 | 5/8 |
| **26** | 3 1/2 | 2 | 1 7/8 | 3/4 |
| **36** | 3 1/2 | 2 5/16 | 2 3/16 | 7/8 |
| **37** | 4 1/4 | 2 5/16 | 2 3/8 | 7/8 |
| **47** | 4 1/4 | 2 11/16 | 2 3/4 | 1 3/32 |
| **49** | 5 3/4 | 3 13/16 | 3 3/4 | 1 5/32 |
| **59** | 5 3/4 | 3 13/16 | 3 3/4 | 1 9/32 |
| **69** | 5 3/4 | 4 1/16 | 4 | 1 9/16 |

### GUAN

| Cat. # | a | b | c | d |
|---|---|---|---|---|
| **14** | 2 1/2 | 2 1/8 | 2 1/16 | 5/8 |
| **24** | 2 1/2 | 2 5/16 | 2 1/4 | 3/4 |
| **16** | 3 1/2 | 2 | 1 7/8 | 3/4 |
| **26** | 3 1/2 | 2 | 1 7/8 | 3/4 |
| **36** | 3 1/2 | 2 5/16 | 2 3/8 | 7/8 |
| **47** | 4 1/4 | 2 11/16 | 2 3/4 | 1 3/32 |
| **59** | 5 3/4 | 4 1/16 | 4 | 1 9/32 |
| **69** | 5 3/4 | 4 1/16 | 4 | 1 9/16 |

### GUAB, GUAL

| Cat. # | a | b | c | d |
|---|---|---|---|---|
| **14** | 2 1/2 | 2 1/4 | 2 3/16 | 5/8 |
| **24** | 2 1/2 | 2 1/2 | 2 7/16 | 3/4 |
| **16** | 3 1/2 | 2 | 1 7/8 | 5/8 |
| **26** | 3 1/2 | 2 | 1 7/8 | 3/4 |
| **36** | 3 1/2 | 2 5/16 | 2 3/16 | 7/8 |
| **47** | 4 1/4 | 2 11/16 | 2 3/4 | 1 3/32 |
| **49** | 5 3/4 | 3 13/16 | 3 3/4 | 1 5/32 |
| **59** | 5 3/4 | 3 13/16 | 3 3/4 | 1 9/32 |
| **69** | 5 3/4 | 4 1/16 | 4 | 1 9/16 |

†Available in copper-free aluminum, add suffix -SA.
*When ordered with suffix -SA are listed for Class I, Division 1 & 2, Groups B, C and D, Class II, Division 1, Groups E, F, G and Class III. Covers have 16 pitch threads. Replacement cover is a GUA06-GB.


www.crouse-hinds.com US: 1-866-764-5454 CAN: 1-800-265-0502 Copyright© 2015 Eaton's Crouse-Hinds Business

## For GUA Condulet® Conduit Outlet Boxes



## Applications:

Threaded covers, canopies and extensions are used:

- To provide a seal in hazardous areas (sealing cover). See note below.
- To mount pendant lighting fixtures such as EVA listed in lighting section (fixture canopy)
- To mount EVA pendant lighting fixtures on cover which is then screwed into outlet box without twisting conductors (union hub cover)
- To mount pendant lighting fixtures on cover which is then screwed into outlet box as above, for wiring after fixture stem is installed (nipple cover)
- To provide means of increasing outlet box depth (threaded extension)

## Features:

- Surface covers are supplied with GUA boxes
- Sealing cover has removable plug for filling enclosure with sealing compound after installation. Sealing cover meets 40% fill requirement of the NEC®. See note below.
- Fixture canopy has a threaded cover in its side to provide access for making splices or taps. Fixture with its conduit stem and canopy can be assembled and wired before installation and conductors can be spliced in canopy after it has been screwed into the body
- Cover threads are 12 pitch.

## Standard Materials:

- Surface and dome covers, union hub covers, nipple covers – copper-free aluminum
- Sealing covers, fixture canopies, threaded extensions – *Feraloy*® iron alloy

## Standard Finishes:

- Aluminum – natural
- *Feraloy* iron alloy – electrogalvanized and aluminum acrylic paint

## Options:

| Description | Suffix |
|---|---|
| *Corro-free*™ epoxy powder coat | **S752** |
| To order an iron surface cover | **WOD** |

## Size Ranges:

- Fixture stems – ¾"
- Body openings – 2" to 5"

**Note:** Depth of sealing compound in body must satisfy requirements of NEC section 501.15(C)(3). Splices and taps in sealing fittings are prohibited by NEC.

## GUA Threaded Extension



| Cover Opening Dia. | Ext. Depth | Cat. # |
|---|---|---|
| 3 | 1¼ | **GUA0631** |

| GUA Cover Opening | Replacement O-Ring Gasket Cat. # |
|---|---|
| 2" | **GASK1713** |
| 3" | **GASK1151** |
| 3⅝" | **GASK1589** |
| 5" | **GASK925** |

## Surface Cover



| Cover Opening Dia. | Thread Pitch | Cat. # |
|---|---|---|
| 2 | 12 | **GUA04** |
| 3 | 12 | **GUA06** |
| 3 | 16 | **GUA06 GB*** |
| 3⅝ | 12 | **GUA07** |
| 5 | 12 | **GUA09** |
| 5 | 16 | **GUA09 GB*** |

## Dome Cover



| Cover Opening Dia. | Ext. Depth | Thread Pitch | Cat. # |
|---|---|---|---|
| 2 | 2 | 12 | **GUA047** |
| 3 | 2 | 12 | **GUA067** |
| 3⅝ | 2 | 12 | **GUA077** |
| 3⅝ | 4 | 12 | **GUA0716** |
| 5 | 4 | 12 | **GUA514** |
| 5 | 10 | 12 | **GUA5110** |

## Sealing Cover



| Cover Opening Dia. | Thread Pitch | Cat. # |
|---|---|---|
| 2 | 12 | **GUA041** |
| 3 | 12 | **GUA062** |
| 3 | 16 | **GUA062 GB*** |
| 3⅝ | 12 | **GUA072** |
| 5 | 12 | **GUA092** |

## Nipple Cover



| Cover Opening Dia. | Fixt. Stem Size | Thread Pitch | Cat. # |
|---|---|---|---|
| 3 | ¾ | 12 | **GUA0672** |

## Fixture Cover
### Union Hub Type



| Cover Opening Dia. | Fixt. Stem Size | Thread Pitch | Cat. # |
|---|---|---|---|
| 3 | ¾ | 12 | **GUA0687** |

## Fixture Canopy



| Cover Opening Dia. | Fixt. Stem Size | Thread Pitch | Cat. # |
|---|---|---|---|
| 3 | ¾ | 12 | **GUA068** |

†Also used with GUP bodies see page 753 or GU and GUE bodies see page 722.
*GUA covers with suffix "GB" are used with Group B rated GUA aluminum bodies identified with symbols †* on pages 50-51.

 Copyright© 2015 Eaton's Crouse-Hinds Business

# Factory Installed Terminal Block Ordering Guide

## For GUA Condulet® Conduit Outlet Boxes



### DIN Rail Mounted Terminal Blocks:

**Electrical Specifications:**
**30 Amp, 150V, AWG 26-10**

| Cat. # | Description |
|---|---|
| **DIN12** | DIN Rail Mounted, 2 Terminal Blocks<br>GUA (Shapes C, L, N, T, X)<br>Form 4 & 6 Cover Dia. Openings |
| **DIN13** | DIN Rail Mounted, 3 Terminal Blocks<br>GUA (Shapes C, L, N, T, X)<br>Form 4 & 6 Cover Dia. Openings |
| **DIN14** | DIN Rail Mounted, 4 Terminal Blocks<br>GUA (Shapes C, L, N, T, X)<br>Form 6, 7 & 9 Cover Dia. Openings |
| **DIN16** | DIN Rail Mounted, 6 Terminal Blocks<br>GUA (Shapes C, L, N, T, X)<br>Form 7 & 9 Cover Dia. Openings |
| **DIN18** | DIN Rail Mounted, 8 Terminal Blocks<br>GUA (Shapes C, L, N, T, X)<br>Form 7 & 9 Cover Dia. Opening |
| **DIN 112** | DIN Rail Mounted, 12 Terminal Blocks<br>GUA (Shapes C, L, T, X)<br>Form 9 Cover Dia. Opening |

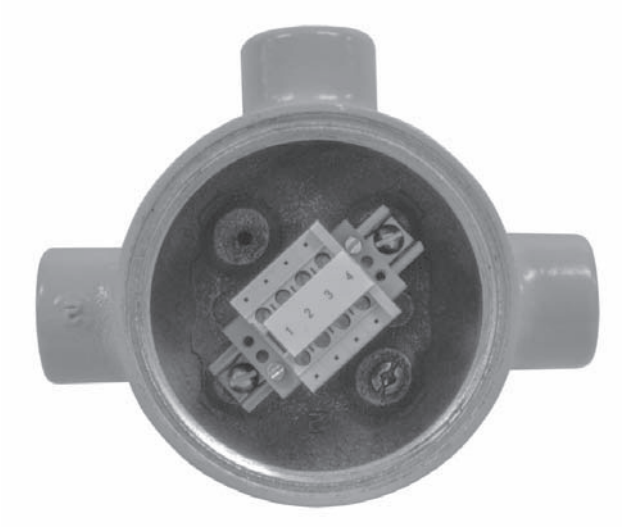

### Direct Mounted Terminal Blocks:

**Electrical Specifications:**
**30 Amp, 300V, AWG 26-10**

| Cat. # | Description |
|---|---|
| **TB14** | Direct Mounted Terminal Block, 4 Poles<br>GUA (Shapes C, L, T, X)<br>Form 6, 7 & 9 Cover Dia. Openings |
| **TB16** | Direct Mounted Terminal Block, 6 Poles<br>GUA (Shapes C, L, T, X)<br>Form 6, 7 & 9 Cover Dia. Openings |
| **TB18** | Direct Mounted Terminal Block, 4 Poles (8 Total)<br>GUA (Shapes C, L, T, X)<br>Form 7 & 9 Cover Dia. Opening |
| **TB112** | Direct Mounted Terminal Block, 12 Poles<br>GUA (Shapes C, L, T, X)<br>Form 9 Cover Dia. Opening |

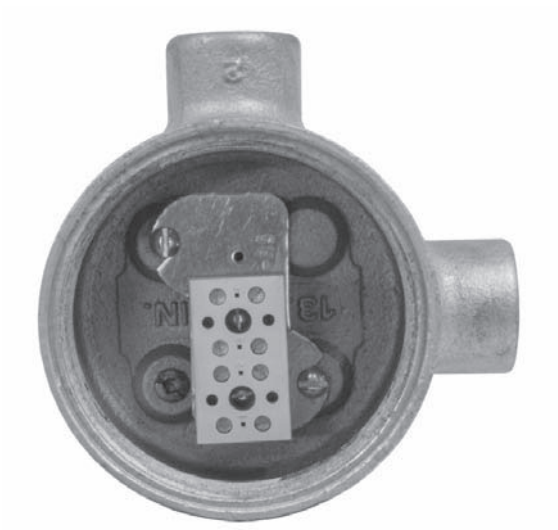


www.crouse-hinds.com US: 1-866-764-5454 CAN: 1-800-265-0502 Copyright© 2015 Eaton's Crouse-Hinds Business



Spec-Kon®


Overview . . . . . M2
Catalog Numbering System . . . . . M2
Terminals
Features and Benefits . . . . . M3
Performance Requirements . . . . . M4
Ring Terminals . . . . . M5-M7
Multiple Stud Ring Terminals . . . . . M8-M9
Large Ring Terminals . . . . . M10-M12
Fork Terminals . . . . . M13-M15
Locking Fork Terminals . . . . . M16-M17
Flanged Fork Terminals . . . . . M18-M19
Blade Terminals . . . . . M20
Pin Terminals . . . . . M21
Disconnects
Features and Benefits . . . . . M22
Design Features . . . . . M22
Performance Requirements . . . . . M22
Female Disconnects . . . . . 23-24
Male Disconnects . . . . . M25
Piggy Back Disconnects . . . . . M26
Fully Insulated Female Disconnects . . . . . M27-M28
Fully Insulated Male Disconnects . . . . . M28
Insulated Female Flag Disconnects . . . . . M29
Insulated Barrel Flag Female Disconnects . . . . . M29
Bullet Receptacles . . . . . M30
Bullet Disconnects . . . . . M31
Splices, Wire Joints and Quick Splices
Features and Benefits . . . . . M32
Butt Splices . . . . . M33-M34
Wire Joints . . . . . M34
Quick Splices . . . . . M34
Installation Tools
Hand Tools . . . . . M35-M37
Automated Tools . . . . . M38-M39
Power Operated Tools . . . . . M40-M41
Application Information
Tool & Die Selection Chart . . . . . M42
Strip Length Chart . . . . . M42
Stud Size Chart . . . . . M43
Common Conductor Size Chart . . . . . M43


M

Thomas&Betts



## *Crimp Terminals, Disconnects, and Splices*

Thomas & Betts is pleased to introduce Spec-Kon® crimp terminals, disconnects, and splices. Ideal for OEM applications, the Spec-Kon® line can be used anywhere a high number of terminations are required every day, such as the wiring harness, panelboard, telecommunications, and automotive industries.

**The Spec-Kon® terminal offering includes:**

- A broad selection of bulk-packaged loose piece terminals in non-insulated and insulated varieties, including male and female disconnects, rings, forks, pins, blades, butt splices, wire joints and bullet connectors.
- Terminals on mylar tape for automated applications, including the new KT-2500 power tool for frequent, repeated crimps.
- The ERG-2500 ergonomic hand tool, which crimps all sizes of insulated barrel-style Spec-Kon® wire termination products.

## Catalog Numbering System

**Example: KV18-6R-M**

| K | V | 18 | 6 | R | M |
|---|---|---|---|---|---|
| **Product** | **Terminal and Insulation** | **Wire Size Range** | **Feature Size** | **Terminal Type** | **Box Quantity** |
| Thomas & Betts Spec-Kon® Terminals | (Blank) Bare Non-Insulated<br>(V) Vinyl Funnel Entry<br>(N) Nylon Funnel Entry<br>(VF) Vinyl Fully Insulated<br>(NF) Nylon Fully Insulated | (18) 22-16 AWG<br>(14) 16-14 AWG<br>(10) 12-10 AWG<br>(8) 8 AWG<br>(6) 6 AWG<br>(4) 4 AWG<br>(2) 2 AWG | **Bolt Hole:**<br>Ring and Fork Terminals<br><br>**Tab Width:**<br>(250 Series) Disconnects<br><br>**Pin Length:**<br>Pin Terminals<br><br>**Blade Length:**<br>Blade Terminals<br><br>**Diameter:**<br>Bullets | (R) Ring<br>(MS) Multiple Stud Ring<br>(F) Fork<br>(LF) Locking Fork<br>(FF) Flanged Fork<br>(PT) Pin Terminal<br>(BL) Blade Terminal<br>(MD) Male Disconnect<br>(FD) Female Disconnect<br>(FFD) Female Flag Disconnect<br>(PD) Piggy Back Disconnect<br>(FB) Female Bullet<br>(MB) Male Bullet<br>(BS) Butt Splice<br>(QS) Quick Splice<br>(WJ) Wire Joint (Closed End)<br>(BFD) Barrel Flag Disconnect | (C) = 100<br>(CC) = 200<br>(W) = 250<br>(D) = 500<br>(M) = 1,000<br>(T) = Mylar Tape*<br><br>* Please contact Customer Service for pricing and availability. |





© 2002 Thomas & Betts Corporation. Specifications are subject to change without notice. www.tnb.com



## *Features and Benefits of Spec-Kon® Terminals*

- *Internal barrel serrations*—During crimping, the wire will cold flow into serrations, giving lower resistance connections and improving tensile strength.
- *Size marking*—Wire range is stamped on the tongue (metric and English) for easy access to the terminal size without drawings/packaging.
- *Electro tin plating*—Provides excellent corrosion resistance, superior finish for better-looking installation.
- *Ergonomic hand tool*—Ergonomically designed ERG-2500 completes a UL listed crimp while requiring substantially lower handle forces.
- *One tool for all insulated products*—Thomas & Betts offers a single tool that crimps the entire range of standard insulated terminals, disconnects, and butt splices. Many competitors require 2 to 4 tools to cover the same range.
- *Color coding*—Insulators are color coded for specific wire size (red=22-16AWG, blue=16-14AWG, yellow=12-10AWG). Red=8AWG, blue=6AWG.

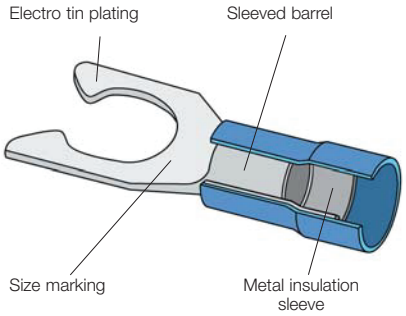


## Nylon Insulated Terminals

- *Sleeved barrel*—Ensures barrel does not separate during crimping.
- *Molded insulators*—Molded insulators ensure consistent shape and quality, shaped entry speeds installation and reduces wire hang up.
- *Metal insulation sleeve*—Sleeve crimps wire insulation, providing high-vibration resistance and conductor strain relief.
- *Nylon material*—Ideal for harsh environments. Provides excellent chemical, impact and abrasion resistance.
- *Ratings*—UL Listed, cULus Listed, CSA, 600 V at 105ºC.

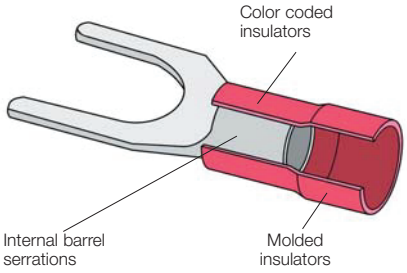


## Vinyl Insulated Terminals

- *Brazed seam*—Ensures barrel does not separate during crimping.
- *Molded funnel entry insulators*—Funnel entry speeds installation and reduces wire hang up. Molded insulators ensure consistent shape and quality every time.
- *Insulation crimp*—The insulator mouth is flared to speed installation and accommodate thicker insulated wires. Also, provides insulation support strain relief in high-vibration applications.
- *Vinyl material*—Economical, moisture resistant and flame retardant (UL94V-0)
- *Ratings*—UL Listed, cULus Listed, CSA, 600 V at 105ºC.

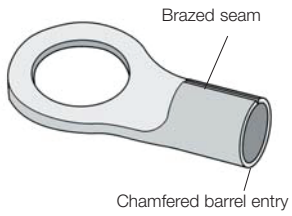


## Non-Insulated Terminals

- *Brazed seam*—Ensures barrel does not separate during crimping.
- *Chamfered barrel entry*—Smoothing the barrel entry edge facilitates wire insertion.
- *Ratings*—UL Listed, cULus Listed, CSA, 2000 V.





© 2002 Thomas & Betts Corporation. Specifications are subject to change without notice. 

## *Design Features of Spec-Kon® Terminals*

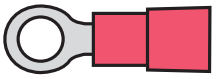

### Rings
Provides the most secure and reliable connection available

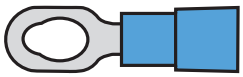

### Multiple-Stud Rings
Special tongue style that accommodates 3 stud sizes with one terminal

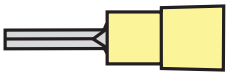

### Pins
Standard insulation-style terminals for use on DIN-style/metric terminal blocks

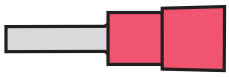

### Blades
Standard insulation-style terminals for use on DIN-style/metric terminal blocks

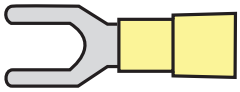

### Forks
Fast and easy to install without removing the terminal block screw

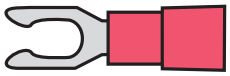

### Locking Forks
Offers the secure connection of a ring terminal with the fast and easy installation of a fork terminal

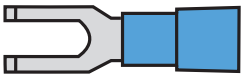

### Flanged Forks
Turned-up toes provide secure connections in high-vibration applications

## Performance Requirements

| Description | Wire Size (AWG) | | | | | | | | | | |
|---|---|---|---|---|---|---|---|---|---|---|---|
| | #22 | #20 | #18 | #16 | #14 | #12 | #10 | #8 | #6 | #4 | #2 |
| **U.L. 486A (Terminals)** | | | | | | | | | | | |
| Test Current for Max. 50˚C Rise (Amps) | 9 | 12 | 17 | 18 | 30 | 35 | 50 | 70 | 95 | 125 | 70 |
| Min. Tensile Strength* (Lbs.) | 8 | 13 | 20 | 30 | 50 | 70 | 80 | 90 | 100 | 140 | 180 |

*** Pull-out force of the crimped terminal.**



### Applicable Spec-Kon® products meet or exceed the following test specifications:

- UL486A (Terminals)
- CSA
- UL486C (Splices)

UL listed products are shown with the applicable logos in the product section.

UL file #E9809 (Terminals).

CSA file #LR4503



© 2002 Thomas & Betts Corporation. Specifications are subject to change without notice. **www.tnb.com**



- Metal Insulation Sleeve
- Molded Insulator
- Internal Barrel Serrations
- Funnel Entry

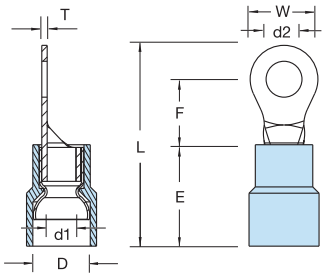


## Nylon Insulated Ring Terminals

| Catalog Number | Wire Range | Bolt Size (d2) | | Dimension inch mm | | | | | | |
|---|---|---|---|---|---|---|---|---|---|---|
| | | | | W | F | L | E | D | d1 | T |
| KN18-6R-M | 22-16 A.W.G. 0.5-1.5 mm² | #6 | .146 3.7 | .260 6.6 | .248 6.3 | .803 20.4 | .433 11.0 | .177 4.5 | .067 1.7 | .030 0.75 |
| KN18-8R-M | | #8 | .169 4.3 | .260 6.6 | .248 6.3 | .803 20.4 | | | | |
| KN18-10R-M | | #10 | .209 5.3 | .315 8.0 | .276 7.0 | .858 21.8 | | | | |
| KN18-14R-M | | 1/4 | .252 6.4 | .457 11.6 | .433 11.0 | 1.094 27.8 | | | | |
| KN18-516R-M | | 5/16 | .331 8.4 | .457 11.6 | .433 11.0 | 1.094 27.8 | | | | |
| KN14-6R-M | 16-14 A.W.G. 1.5-2.5 mm² | #6 | .146 3.7 | .260 6.6 | .248 6.3 | .8.3 20.4 | .433 11.0 | .205 5.2 | .091 2.3 | .031 0.8 |
| KN14-8R-M | | #8 | .169 4.3 | .260 6.6 | .248 6.3 | .803 20.4 | | | | |
| KN14-10R-M | | #10 | .209 5.3 | .335 8.5 | .307 7.8 | .898 22.8 | | | | |
| KN14-14R-M | | 1/4 | .252 6.4 | .472 12.0 | .433 11.0 | 1.094 27.8 | | | | |
| KN14-516R-M | | 5/16 | .331 8.4 | .472 12.0 | .433 11.0 | 1.094 27.8 | | | | |
| KN14-38R-M | | 3/8 | .413 10.5 | .535 13.6 | .547 13.9 | 1.240 31.5 | | | | |
| KN10-6R-D | 12-10 A.W.G. 4-6 mm² | #6 | .146 3.7 | .283 7.2 | .240 6.1 | .894 22.7 | .512 13.0 | .276 7.0 | .134 3.4 | .039 1.0 |
| KN10-8R-D | | #8 | .169 4.3 | .283 7.2 | .240 6.1 | .894 22.7 | | | | |
| KN10-10R-D | | #10 | .209 5.3 | .374 9.5 | .358 9.1 | 1.047 26.6 | | | | |
| KN10-14R-D | | 1/4 | .252 6.4 | .472 12.0 | .413 10.5 | 1.164 29.5 | | | | |
| KN10-516R-D | | 5/16 | .331 8.4 | .591 15.0 | .531 13.5 | 1.339 34.0 | | | | |
| KN10-38R-D | | 3/8 | .413 10.5 | .591 15.0 | .531 13.5 | 1.339 34.0 | | | | |
| KN10-12R-D | | 1/2 | .512 13.0 | .756 19.2 | .630 16.0 | 1.520 38.6 | | | | |

**Box Quantity: (D)=500; (M)=1000**
**For Mylar Tape replace box quantity with (T). Example: KN18-6R-T**
**UL File #E9809**
**CSA File #LR4503**

**See pages in back of catalog for complete tool information.**
**Tool and Die Selection Chart on page M42.**

**Maximum Electrical Rating:** 105°C 600 Volts Max.
**Terminal Material:** Copper

## *Tools used with Nylon Insulated Ring Terminals*



**ERG2500**



**KT-2500**

**For complete information regarding tools and the new Universal Applicator, see pages M35-M41.**





© 2002 Thomas & Betts Corporation. Specifications are subject to change without notice. 



- Molded Funnel Entry Insulator
- Brazed Seam
- Internal Barrel Serrations

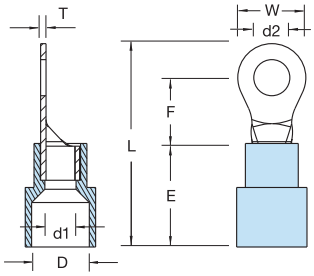


## Vinyl Insulated Ring Terminals

| Catalog Number | Wire Range | Bolt Size (d2) | | Dimension inch mm | | | | | | |
|---|---|---|---|---|---|---|---|---|---|---|
| | | | | W | F | L | E | D | d1 | T |
| KV18-6R-M | 22-16 A.W.G. 0.5-1.5 mm² | #6 | .146 3.7 | .260 6.6 | .248 6.3 | .803 20.4 | .433 11.0 | .157 4.0 | .067 1.7 | .030 0.75 |
| KV18-8R-M | | #8 | .169 4.3 | .260 6.6 | .248 6.3 | .803 20.4 | | | | |
| KV18-10R-M | | #10 | .209 5.3 | .315 8.0 | .276 7.0 | .858 21.8 | | | | |
| KV18-14R-M | | 1/4 | .252 6.4 | .457 11.6 | .433 11.0 | 1.094 27.8 | | | | |
| KV18-516R-M | | 5/16 | .331 8.4 | .457 11.6 | .433 11.0 | 1.094 27.8 | | | | |
| KV18-38R-M | | 3/8 | .413 10.5 | .835 13.6 | .547 13.9 | 1.240 31.5 | | | | |
| KV14-6R-M | 16-14 A.W.G. 1.5-2.5 mm² | #6 | .146 3.7 | .260 6.6 | .248 6.3 | .803 20.4 | .433 11.0 | .177 4.5 | .091 2.3 | .031 0.8 |
| KV14-8R-M | | #8 | .169 4.3 | .260 6.6 | .248 6.3 | .803 20.4 | | | | |
| KV14-10R-M | | #10 | .209 5.3 | .335 8.5 | .307 7.8 | .898 22.8 | | | | |
| KV14-14R-M | | 1/4 | .252 6.4 | .472 12.0 | .433 11.0 | 1.094 27.8 | | | | |
| KV14-516R-M | | 5/16 | .331 8.4 | .472 12.0 | .433 11.0 | 1.094 27.8 | | | | |
| KV14-38R-M | | 3/8 | .413 10.5 | .535 13.6 | .547 13.9 | 1.240 31.5 | | | | |
| KV10-6R-D | 12-10 A.W.G. 4-6 mm² | #6 | .146 3.7 | .283 7.2 | .240 6.1 | .894 22.7 | .512 13.0 | .252 6.4 | .134 3.4 | .039 1.0 |
| KV10-8R-D | | #8 | .169 4.3 | .283 7.2 | .240 6.1 | .894 22.7 | | | | |
| KV10-10R-D | | #10 | .209 5.3 | .374 9.5 | .358 9.1 | 1.047 26.6 | | | | |
| KV10-14R-D | | 1/4 | .252 6.4 | .472 12.0 | .413 10.5 | 1.161 29.5 | | | | |
| KV10-516R-D | | 5/16 | .331 8.4 | .591 15.0 | .531 13.5 | 1.339 34.0 | | | | |
| KV10-38R-D | | 3/8 | .413 10.5 | .591 15.0 | .531 13.5 | 1.339 34.0 | | | | |
| KV10-12R-D | | 1/2 | .512 13.0 | .756 19.2 | .630 16.0 | 1.520 38.6 | | | | |

**Box Quantity: (D)=500; (M)=1000**
**For Mylar Tape replace box quantity with (T). Example: KV18-6R-T**
**UL File #E9809**
**CSA File #LR4503**

**See pages in back of catalog for complete tool information.**
**Tool and Die Selection Chart on page M42.**

**Maximum Electrical Rating:** 105°C 600 Volts Max.
**Terminal Material:** Copper

## *Tools used with Vinyl Insulated Ring Terminals*



**ERG2500**



**KT-2500**

Thomas&Betts



© 2002 Thomas & Betts Corporation. Specifications are subject to change without notice. **www.tnb.com**

## Non-Insulated Ring Terminals



- Chamfered Barrel
- Brazed Seam
- Internal Barrel Serrations

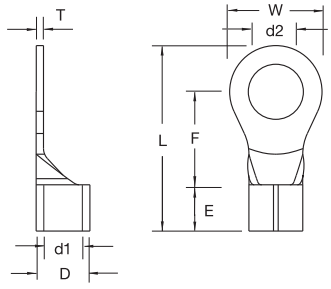


| Catalog Number | Wire Range | Bolt Size (d2) | | Dimension inch mm | | | | | | |
|---|---|---|---|---|---|---|---|---|---|---|
| | | | | W | F | L | E | D | d1 | T |
| K18-6R-M | 22-16 A.W.G. 0.5-1.5 mm² | #6 | .146 3.7 | .260 6.6 | .248 6.3 | .567 14.4 | .189 4.8 | .134 3.4 | .067 1.7 | .030 0.75 |
| K18-8R-M | | #8 | .169 4.3 | .260 6.6 | .248 6.3 | .567 14.4 | | | | |
| K18-10R-M | | #10 | .209 5.3 | .315 8.0 | .276 7.0 | .622 15.8 | | | | |
| K18-14R-M | | 1/4 | .252 6.4 | .457 11.6 | .433 11.0 | .858 21.8 | | | | |
| K18-516R-M | | 5/16 | .331 8.4 | .457 11.6 | .433 11.0 | .858 21.8 | | | | |
| K14-6R-M | 16-14 A.W.G. 1.5-2.5 mm² | #6 | .146 3.7 | .260 6.6 | .248 6.3 | .567 14.4 | .189 4.8 | .161 4.1 | .091 2.3 | .031 0.8 |
| K14-8R-M | | #8 | .169 4.3 | .260 6.6 | .248 6.3 | .567 14.4 | | | | |
| K14-10R-M | | #10 | .209 5.3 | .335 8.5 | .307 7.8 | .661 16.8 | | | | |
| K14-14R-M | | 1/4 | .252 6.4 | .472 12.0 | .433 11.0 | .858 21.8 | | | | |
| K14-516R-M | | 5/16 | .331 8.4 | .472 12.0 | .433 11.0 | .858 21.8 | | | | |
| K14-38R-M | | 3/8 | .413 10.5 | .535 13.6 | .547 13.9 | 1.004 25.5 | | | | |
| K10-6R-M | 12-10 A.W.G. 4-6 mm² | #6 | .146 3.7 | .283 7.2 | .240 6.1 | .618 15.7 | .236 6.0 | .220 5.6 | .134 3.4 | .039 1.0 |
| K10-8R-M | | #8 | .169 4.3 | .283 7.2 | .240 6.1 | .618 15.7 | | | | |
| K10-10R-M | | #10 | .209 5.3 | .374 9.5 | .358 9.1 | .772 19.6 | | | | |
| K10-14R-M | | 1/4 | .252 6.4 | .472 12.0 | .413 10.5 | .886 22.5 | | | | |
| K10-516R-M | | 5/16 | .331 8.4 | .591 15.0 | .531 13.5 | 1.063 27.0 | | | | |
| K10-38R-M | | 3/8 | .413 10.5 | .591 15.0 | .531 13.5 | 1.063 27.0 | | | | |
| K10-12R-D | | 1/2 | .512 13.0 | .756 19.2 | .630 16.0 | 1.244 31.6 | | | | |

**Box Quantity: (D)=500; (M)=1000**
**For Mylar Tape replace box quantity with (T). Example: K18-6R-T**
**UL File #E9809**
**CSA File #LR4503**

**See pages in back of catalog for complete tool information.**
**Tool and Die Selection Chart on page M42.**

**Terminal Material:** Copper

## *Tools used with Non-Insulated Ring Terminals*



**ERG2002**



**KT-2500**



Thomas&Betts

© 2002 Thomas & Betts Corporation. Specifications are subject to change without notice. **www.tnb.com**

## Nylon Insulated Multiple Stud Ring Terminals



| Catalog Number | Wire Range | Bolt Size | Dimension inch mm | | | | | | |
|---|---|---|---|---|---|---|---|---|---|
| | | | W | F | L | E | D | d1 | T |
| KN18-610MS-M | 22-16 A.W.G. 0.5-1.5 mm² | #6 - #10 | .339 8.6 | .311 7.9 | .996 25.3 | .433 11.0 | .177 4.5 | .067 1.7 | .030 0.75 |
| KN14-610MS-M | 16-14 A.W.G. 1.5-2.5 mm² | #6 - #10 | .339 8.6 | .311 7.9 | .996 25.3 | .433 11.0 | .205 5.2 | .091 2.3 | .031 0.8 |
| KN10-610MS-D | 12-10 A.W.G. 4-6 mm² | #6 - #10 | .390 9.9 | .350 8.9 | 1.154 29.3 | .512 13.0 | .276 7.0 | .134 3.4 | .039 1.0 |

- Single terminal for 6, 8, and 10 stud sizes
- Molded Insulator
- Metal Insulation Sleeve
- Funnel Entry

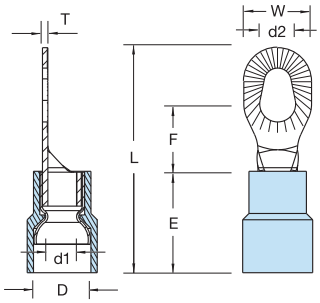


**Box Quantity: (D)=500; (M)=1000**
**For Mylar Tape replace box quantity with (T). Example: KN18-610MS-T**
**UL File #E9809**
**CSA File #LR4503**

**See pages in back of catalog for complete tool information.**
**Tool and Die Selection Chart on page M42.**

**Maximum Electrical Rating:** 105°C 600 Volts Max.
**Terminal Material:** Copper

## Vinyl Insulated Multiple Stud Ring Terminals



| Catalog Number | Wire Range | Bolt Size | Dimension inch mm | | | | | | |
|---|---|---|---|---|---|---|---|---|---|
| | | | W | F | L | E | D | d1 | T |
| KV18-610MS-M | 22-16 A.W.G. 0.5-1.5 mm² | #6 - #10 | .339 8.6 | .311 7.9 | .996 25.3 | .433 11.0 | .157 4.0 | .067 1.7 | .030 0.75 |
| KV14-610MS-M | 16-14 A.W.G. 1.5-2.5 mm² | #6 - #10 | .339 8.6 | .311 7.9 | .996 25.3 | .433 11.0 | .177 4.5 | .091 2.3 | .031 0.8 |
| KV10-610MS-D | 12-10 A.W.G. 4-6 mm² | #6 - #10 | .390 9.9 | .350 8.9 | 1.154 29.3 | .512 13.0 | .252 6.4 | .134 3.4 | .039 1.0 |

- Single terminal for 6, 8, and 10 stud sizes
- Molded Funnel Entry Insulator
- Brazed Seam

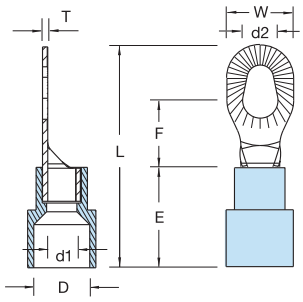


**Box Quantity: (D)=500; (M)=1000**
**For Mylar Tape replace box quantity with (T). Example: KV18-610MS-T**
**UL File #E9809**
**CSA File #LR4503**

**See pages in back of catalog for complete tool information.**
**Tool and Die Selection Chart on page M42.**

**Maximum Electrical Rating:** 105°C 600 Volts Max.
**Terminal Material:** Copper

## *Tools used with Nylon and Vinyl Insulated Multiple Stud Ring Terminals*



**ERG2500**



**KT-2500**

Thomas&Betts





© 2002 Thomas & Betts Corporation. Specifications are subject to change without notice. www.tnb.com



## Non-Insulated Multiple Stud Ring Terminals

| Catalog Number | Wire Range | Bolt Size | Dimension inch mm | | | | | | |
|---|---|---|---|---|---|---|---|---|---|
| | | | W | F | L | E | D | d1 | T |
| K18-610MS-M | 22-16 A.W.G. 0.5-1.5 mm² | #6 - #10 | .339 8.6 | .311 7.9 | .768 19.5 | .189 4.8 | .134 3.4 | .067 1.7 | .030 0.75 |
| K14-610MS-M | 16-14 A.W.G. 1.5-2.5 mm² | #6 - #10 | .339 8.6 | .311 7.9 | .768 19.5 | .189 4.8 | .161 4.1 | .091 2.3 | .031 0.8 |
| K10-610MS-M | 12-10 A.W.G. 4-6 mm² | #6 - #10 | .390 9.9 | .350 8.9 | .886 22.5 | .236 6.0 | .220 5.6 | .134 3.4 | .039 1.0 |

- Single terminal for 6, 8, and 10 stud sizes
- Brazed Seam
- Chamfered Barrel
- Internal Barrel Serrations

**Box Quantity: (M)=1000**
**For Mylar Tape replace box quantity with (T). Example: K18-610MS-T**
**UL File #E9809**
**CSA File #LR4503**

**Terminal Material:** Copper

**See pages in back of catalog for complete tool information.**
**Tool and Die Selection Chart on page M42.**

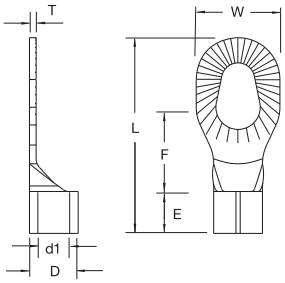


## *Tools used with Non-Insulated Multiple Stud Ring Terminals*



**ERG2002**



**KT-2500**





© 2002 Thomas & Betts Corporation. Specifications are subject to change without notice. 



- Brazed Seam
- Molded Funnel Entry Insulator
- Internal Barrel Serrations

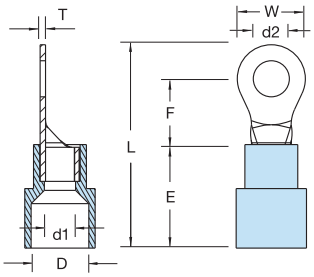


## Nylon Insulated Large Ring Terminals

| Catalog Number | Wire Range | Bolt Size (d2) | | Dimension inch mm | | | | | | |
|---|---|---|---|---|---|---|---|---|---|---|
| | | | | W | F | L | E | D | d1 | T |
| KN8-8R-D | 8 A.W.G. 8 mm² | #8 | .169 4.3 | .315 8.0 | .366 9.3 | 1.142 29.0 | .630 16.0 | .315 8.0 | .177 4.5 | .047 1.2 |
| KN8-10R-D | | #10 | .209 5.3 | .364 8.8 | .429 10.9 | 1.232 31.3 | | | | |
| KN8-14R-D | | 1/4 | .252 6.4 | .472 12.0 | .366 9.3 | 1.232 31.3 | | | | |
| KN8-516R-D | | 5/16 | .331 8.4 | .591 15.0 | .543 13.8 | 1.469 37.3 | | | | |
| KN8-38R-D | | 3/8 | .413 10.5 | .591 15.0 | .543 13.8 | 1.469 37.3 | | | | |
| KN8-12R-D | | 1/2 | .512 13.0 | .787 20.0 | .591 15.0 | 1.614 41.0 | | | | |
| KN6-10R-W | 6 A.W.G. 14 mm² | #10 | .209 5.3 | .472 12.0 | .524 13.3 | 1.606 40.8 | .846 21.5 | .433 11.0 | .228 5.8 | .059 1.5 |
| KN6-14R-W | | 1/4 | .252 6.4 | | | | | | | |
| KN6-516R-W | | 5/16 | .331 8.4 | .630 16.0 | .559 14.2 | 1.713 43.5 | | | | |
| KN6-38R-W | | 3/8 | .413 10.5 | | | | | | | |
| KN6-12R-W | | 1/2 | .512 13.0 | .866 22.0 | .780 19.8 | 2.047 52.0 | | | | |

**Box Quantity: (W)=250; (D)=500**
**For mylar tape, replace box quantity with (T). Example: KN8-8R-T.**

**See pages in back of catalog for complete tool information.**
**Tool and Die Selection Chart on page M42.**

**Maximum Electrical Rating:** 105°C 600 Volts Max.
**Terminal Material:** Copper

#8 AWG on mylar tape is UL Listed.
#6 AWG on mylar tape is UL Listed.

**UL File #E9809**
**CSA File #LR4503**

M
Spec-Kon®

## *Tools used with Nylon Insulated Large Ring Terminals*



**TBM6S**

**For tooling information for nylon insulated large ring terminals, see page M37.**



**KT-2500**


© 2002 Thomas & Betts Corporation. Specifications are subject to change without notice.



- Brazed Seam
- Chamfered Barrel
- Internal Barrel Serrations

## Non-Insulated Large Ring Terminals

| Catalog Number | Wire Range | Bolt Size (d2) | | Dimension inch mm | | | | | | |
|---|---|---|---|---|---|---|---|---|---|---|
| | | | | W | F | L | E | D | d1 | T |
| K8-8R-D | 8 A.W.G. 8 mm² | #8 | .169 4.3 | .315 8.0 | .366 9.3 | .846 21.5 | .337 8.5 | .283 7.2 | .177 4.5 | .047 1.2 |
| K8-10R-D | | #10 | .209 5.3 | .346 8.8 | .429 10.5 | .937 23.8 | | | | |
| K8-14R-D | | 1/4 | .252 6.4 | .472 12.0 | .366 9.3 | .937 23.8 | | | | |
| K8-516R-D | | 5/16 | .331 8.4 | .591 15.0 | .543 13.8 | 1.161 29.8 | | | | |
| K8-38R-D | | 3/8 | .413 10.5 | .591 15.0 | .543 13.8 | 1.161 29.8 | | | | |
| K8-12R-D | | 1/2 | .512 13.0 | .787 20.0 | .591 15.0 | 1.319 33.5 | | | | |
| K6-10R-D | 6 A.W.G. 14 mm² | #10 | .209 5.3 | .472 12.0 | .524 13.3 | 1.173 29.8 | .413 10.5 | .354 9.0 | .228 5.85 | .059 1.5 |
| K6-14R-D | | 1/4 | .252 6.4 | .472 12.0 | .524 13.3 | 1.173 29.8 | | | | |
| K6-516R-D | | 5/16 | .331 8.4 | .630 16.0 | .559 14.2 | 1.280 32.5 | | | | |
| K6-38R-D | | 3/8 | .413 10.5 | .630 16.0 | .559 14.2 | 1.280 32.5 | | | | |
| K6-12R-W | | 1/2 | .512 13.0 | .866 22.0 | .780 19.8 | 1.614 41.0 | | | | |
| K4-8R-W* | 4 A.W.G. 22 mm² | #8 | .169 4.3 | .481 12.2 | .594 15.1 | 1.307 33.2 | .472 12.0 | .453 11.5 | .303 7.7 | .067 1.7 |
| K4-10R-W* | | #10 | .209 5.3 | .481 12.2 | .594 15.1 | .1.307 33.2 | | | | |
| K4-14R-W* | | 1/4 | .252 6.4 | .481 12.2 | .594 15.1 | 1.299 33.0 | | | | |
| K4-516R-W* | | 5/16 | .331 8.4 | .650 16.5 | .531 13.5 | 1.319 33.5 | | | | |
| K4-38R-W* | | 3/8 | .413 10.5 | .650 16.5 | .531 13.5 | 1.319 33.5 | | | | |
| K4-12R-CC* | | 1/2 | .512 13.0 | .866 22.0 | .776 19.7 | 1.661 42.5 | | | | |
| K2-10R-CC* | 2 A.W.G. 38 mm² | #10 | .209 5.3 | .602 15.3 | .685 17.4 | 1.535 39.0 | .551 14.0 | .524 13.3 | .370 9.4 | .071 1.8 |
| K2-14R-CC* | | 1/4 | .252 6.4 | .602 15.3 | .685 17.4 | 1.535 39.0 | | | | |
| K2-516R-CC* | | 5/16 | .331 8.4 | .602 15.3 | .685 17.4 | 1.535 39.0 | | | | |
| K2-38R-CC* | | 3/8 | .413 10.5 | .602 15.3 | .685 17.4 | 1.535 39.0 | | | | |
| K2-12R-CC* | | 1/2 | .512 13.0 | .866 22.0 | .697 17.7 | 1.681 42.7 | | | | |

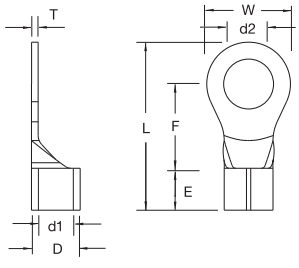


**Box Quantity: C=100; CC=200; (W)=250; (D)=500;**

**For mylar tape, replace box quantity with (T). Example: K6-10R-T.**
**See pages in back of catalog for complete tool information.**
**Tool and Die Selection Chart on page M42.**

**Terminal Material:** Copper

**UL File #E9809**
***Pending UL Listing**

### *Tools used with Non-Insulated Large Ring Terminals*



**TBM6S**



**KT-2500**

**For tooling information for nylon insulated large ring terminals, see page M37.**



Thomas&Betts

© 2002 Thomas & Betts Corporation. Specifications are subject to change without notice. 

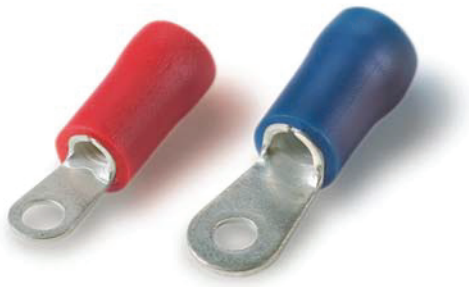

## Vinyl Insulated Large Ring Terminals

| Catalog Number | Wire Range | Bolt Size (d2) | | Dimension inch mm W | F | L | E | D | d1 | T |
|---|---|---|---|---|---|---|---|---|---|---|
| KV8-8R-D | 8 A.W.G. 8 mm² | #8 | .169 4.3 | .315 8.0 | .366 9.3 | 1.16 29.5 | .650 16.5 | .335 8.5 | .177 4.5 | .047 1.2 |
| KV8-10R-D | | #10 | .209 5.3 | .346 8.8 | .429 10.9 | 1.25 31.8 | | | | |
| KV8-14R-D | | 1/4 | .252 6.4 | .472 12.0 | .366 9.3 | 1.25 31.8 | | | | |
| K8-516R-D | | 5/16 | .331 8.4 | .591 15.0 | .543 13.8 | 1.49 37.8 | | | | |
| KV8-38R-D | | 3/8 | .413 10.5 | .591 15.0 | .543 13.8 | 1.49 37.8 | | | | |
| KV8-12R-D | | 1/2 | .512 13.0 | .787 20.0 | .591 15.0 | 1.63 41.5 | | | | |
| KV6-10R-W | 6 A.W.G. 14 mm² | #10 | .209 5.3 | .472 12.0 | .524 13.3 | 1.62 41.2 | .886 22.5 | .414 10.5 | .222 5.65 | .059 1.5 |
| KV6-14R-W | | 1/4 | .252 6.4 | .472 12.0 | .524 13.3 | 1.62 41.2 | | | | |
| KV6-516R-W | | 5/16 | .331 8.4 | .630 16.0 | .571 14.5 | 1.75 44.5 | | | | |
| KV6-38R-W | | 3/8 | .413 10.5 | .630 16.0 | .571 14.5 | 1.75 44.5 | | | | |
| KV6-12R-W | | 1/2 | .512 13.0 | .866 22.0 | .780 19.8 | 2.09 53 | | | | |

- Brazed Seam
- Internal Barrel Serrations

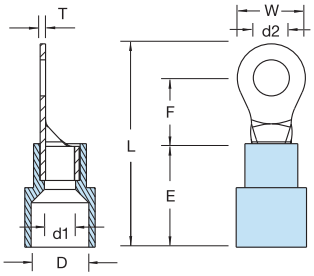


**Box Quantity: (W)=250; (D)=500**
**For mylar tape, replace box quantity with (T). Example: KN8-8R-T.**

**See pages in back of catalog for complete tool information.**
**Tool and Die Selection Chart on page M42.**

**Maximum Electrical Rating:** 105°C 600 Volts Max.
**Terminal Material:** Copper

#8 AWG on mylar tape is UL Listed.
#6 AWG on mylar tape is UL Listed.

**UL File #E9809**
**CSA File #LR4503**

M

Spec-Kon®

## *Tools used with Vinyl Insulated Large Ring Terminals*



**TBM6S**

**For tooling information for nylon insulated large ring terminals, see page M37.**



**KT-2500**



© 2002 Thomas & Betts Corporation. Specifications are subject to change without notice. 



- Metal Insulation Sleeve
- Molded Insulator
- Internal Barrel Serrations
- Funnel Entry

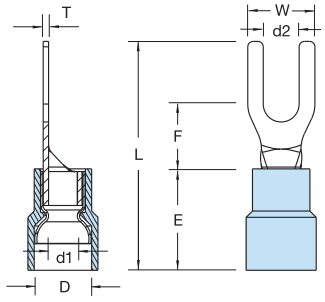


## Nylon Insulated Fork Terminals

| Catalog Number | Wire Range | Bolt Size (d2) | | Dimension inch mm | | | | | | |
|---|---|---|---|---|---|---|---|---|---|---|
| | | | | W | F | L | E | D | d1 | T |
| KN18-6F-M | 22-16 A.W.G. 0.5-1.5 mm² | #6 | .146 3.7 | .252 6.4 | .256 6.5 | .866 22.0 | .433 11.0 | .177 4.5 | .067 1.7 | .030 0.75 |
| KN18-8F-M | | #8 | .169 4.3 | .252 6.4 | .256 6.5 | .866 22.0 | | | | |
| KN18-10F-M | | #10 | .209 5.3 | .319 8.1 | .256 6.5 | .866 22.0 | | | | |
| KN18-14F-M | | 1/4 | .252 6.4 | .374 9.5 | .256 6.5 | .866 22.0 | | | | |
| KN14-6F-M | 16-14 A.W.G. 1.5-2.5 mm² | #6 | .146 3.7 | .236 6.0 | .256 6.5 | .866 22.0 | .433 11.0 | .205 5.2 | .091 2.3 | .031 0.8 |
| KN14-8F-M | | #8 | .169 4.3 | .252 6.4 | .256 6.5 | .866 22.0 | | | | |
| KN14-10F-M | | #10 | .209 5.3 | .311 7.9 | .256 6.5 | .866 22.0 | | | | |
| KN14-14F-M | | 1/4 | .252 6.4 | .366 9.3 | .256 6.5 | .866 22.0 | | | | |
| KN10-6F-D | 12-10 A.W.G. 4-6 mm² | #6 | .146 3.7 | .283 7.2 | .295 7.5 | .961 24.4 | .512 13.0 | .276 7.0 | .134 3.4 | .039 1.0 |
| KN10-8F-D | | #8 | .169 4.3 | .327 8.3 | .276 7.0 | 1.004 25.5 | | | | |
| KN10-10F-D | | #10 | .209 5.3 | .354 9.0 | .276 7.0 | 1.004 25.5 | | | | |
| KN10-14F-D | | 1/4 | .252 6.4 | .354 9.0 | .276 7.0 | 1.004 25.5 | | | | |
| KN10-516F-D | | 5/16 | .315 8.4 | .551 14.0 | .413 10.5 | 1.201 30.5 | | | | |

**Box Quantity: (D)=500; (M)=1000**
**For Mylar Tape replace box quantity with (T). Example: KN18-6F-T**
**UL File #E9809**
**CSA File #LR4503**

**See pages in back of catalog for complete tool information.**
**Tool and Die Selection Chart on page M42.**

**Maximum Electrical Rating:** 105˚C 600 Volts Max.
**Terminal Material:** Copper



## *Tools used with Nylon Insulated Ring Terminals*



**ERG2500**



**KT-2500**



© 2002 Thomas & Betts Corporation. Specifications are subject to change without notice. 



## Vinyl Insulated Fork Terminals

- Molded Funnel Entry Insulator
- Brazed Seam
- Internal Barrel Serrations

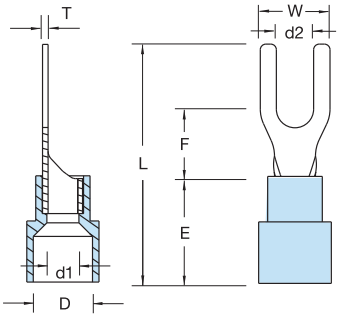


| Catalog Number | Wire Range | Bolt Size (d2) | | Dimension inch mm | | | | | | |
|---|---|---|---|---|---|---|---|---|---|---|
| | | | | W | F | L | E | D | d1 | T |
| KV18-6F-M | 22-16 A.W.G. 0.5-1.5 mm² | #6 | .146 3.7 | .252 6.4 | .256 6.5 | .866 22.0 | .433 11.0 | .157 4.0 | .067 1.7 | .030 0.75 |
| KV18-8F-M | | #8 | .169 4.3 | .252 6.4 | .256 6.5 | .866 22.0 | | | | |
| KV18-10F-M | | #10 | .209 5.3 | .319 8.1 | .256 6.5 | .866 22.0 | | | | |
| KV18-14F-M | | 1/4 | .252 6.4 | .374 9.5 | .256 6.5 | .866 22.0 | | | | |
| KV14-6F-M | 16-14 A.W.G. 1.5-2.5 mm² | #6 | .146 3.7 | .236 6.0 | .256 6.5 | .866 22.0 | .433 11.0 | .177 4.5 | .091 2.3 | .031 0.8 |
| KV14-8F-M | | #8 | .169 4.3 | .252 6.4 | .256 6.5 | .866 22.0 | | | | |
| KV14-10F-M | | #10 | .209 5.3 | .311 7.9 | .256 6.5 | .866 22.0 | | | | |
| KV14-14F-M | | 1/4 | .252 6.4 | .366 9.3 | .256 6.5 | .866 22.0 | | | | |
| KV10-6F-D | 12-10 A.W.G. 4-6 mm² | #6 | .146 3.7 | .283 7.2 | .295 7.5 | .961 24.4 | .512 13.0 | .252 6.4 | .134 3.4 | .039 1.0 |
| KV10-8F-D | | #8 | .169 4.3 | .327 8.3 | .276 7.0 | 1.004 25.5 | | | | |
| KV10-10F-D | | #10 | .209 5.3 | .354 9.0 | .276 7.0 | 1.004 25.5 | | | | |
| KV10-14F-D | | 1/4 | .252 6.4 | .354 9.0 | .276 7.0 | 1.004 25.5 | | | | |
| KV10-516F-D | | 5/16 | .315 8.4 | .551 14.0 | .413 10.5 | 1.201 30.5 | | | | |

**Box Quantity: (D)=500; (M)=1000**
**For Mylar Tape replace box quantity with (T). Example: KV18-6F-T**
**UL File #E9809**
**CSA File #LR4503**

**See pages in back of catalog for complete tool information.**
**Tool and Die Selection Chart on page M42.**

**Maximum Electrical Rating:** 105°C 600 Volts Max.
**Terminal Material:** Copper

## *Tools used with Vinyl Insulated Fork Terminals*



**ERG2500**



**KT-2500**



© 2002 Thomas & Betts Corporation. Specifications are subject to change without notice. **www.tnb.com**



- Chamfered Barrel
- Brazed Seam
- Internal Barrel Serrations

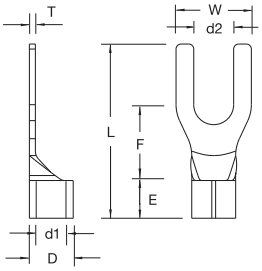


## Non-Insulated Fork Terminals

| Catalog Number | Wire Range | Bolt Size (d2) | | Dimension inch mm | | | | | | |
|---|---|---|---|---|---|---|---|---|---|---|
| | | | | W | F | L | E | D | d1 | T |
| K18-6F-M | 22-16 A.W.G. 0.5-1.5 mm² | #6 | .146 3.7 | .252 6.4 | .256 6.5 | .630 16.0 | .189 4.8 | .134 3.4 | .067 1.7 | .030 0.75 |
| K18-8F-M | | #8 | .169 4.3 | .252 6.4 | | | | | | |
| K18-10F-M | | #10 | .209 5.3 | .319 8.1 | | | | | | |
| K14-6F-M | 16-14 A.W.G. 1.5-2.5 mm² | #6 | .146 3.7 | .236 6.0 | .256 6.5 | .630 16.0 | .189 4.8 | .161 4.1 | .091 2.3 | .031 0.8 |
| K14-8F-M | | #8 | .169 4.3 | .252 6.4 | | | | | | |
| K14-10F-M | | #10 | .209 5.3 | .319 8.1 | | | | | | |
| K10-6F-M | 12-10 A.W.G. 4-6 mm² | #6 | .146 3.7 | .283 7.2 | .295 7.5 | .685 17.4 | .236 6.0 | .220 5.6 | .134 3.4 | .039 1.0 |
| K10-8F-M | | #8 | .169 4.3 | .327 8.3 | .276 7.0 | .728 18.5 | | | | |
| K10-10F-M | | #10 | .209 5.3 | .354 9.0 | | | | | | |
| K10-14F-M | | 1/4 | .252 6.4 | .354 9.0 | | | | | | |

**Box Quantity: (M)=1000**
**For Mylar Tape replace box quantity with (T). Example: K18-6F-T**
**UL File #E9809**
**CSA File #LR4503**

**See pages in back of catalog for complete tool information.**
**Tool and Die Selection Chart on page M42.**

**Terminal Material:** Copper

## *Tools used with Non-Insulated Fork Terminals*



**ERG2002**



**KT-2500**



Thomas&Betts

© 2002 Thomas & Betts Corporation. Specifications are subject to change without notice. 

## Nylon Insulated Locking Fork Terminals



- Metal Insulation Sleeve
- Molded Insulator
- Internal Barrel Serrations
- Funnel Entry

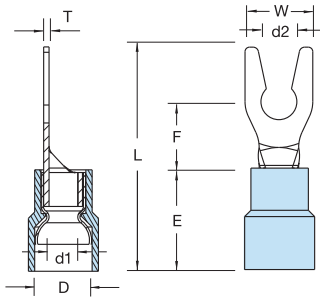


| Catalog Number | Wire Range | Bolt Size (d2) | | Dimension inch mm | | | | | | |
|---|---|---|---|---|---|---|---|---|---|---|
| | | | | W | F | L | E | D | d1 | T |
| KN18-6LF-M | 22-16 A.W.G. 0.5-1.5 mm² | #6 | .146 3.7 | .252 6.4 | .256 6.5 | .866 22.0 | .433 11.0 | .177 4.5 | .067 1.7 | .030 0.75 |
| KN18-8LF-M | | #8 | .169 4.3 | .283 7.2 | | | | | | |
| KN18-10LF-M | | #10 | .209 5.3 | .319 8.1 | | | | | | |
| KN14-6LF-M | 16-14 A.W.G. 1.5-2.5 mm² | #6 | .146 3.7 | .236 6.0 | .256 6.5 | .866 22.0 | .433 11.0 | .205 5.2 | .091 2.3 | .031 0.8 |
| KN14-8LF-M | | #8 | .169 4.3 | .283 7.2 | | | | | | |
| KN14-10LF-M | | #10 | .209 5.3 | .319 8.1 | | | | | | |
| KN10-6LF-D | 12-10 A.W.G. 4-6 mm² | #6 | .146 3.7 | .327 8.3 | .276 7.0 | .992 25.2 | .512 13.0 | .276 7.0 | .134 3.4 | .039 1.0 |
| KN10-8LF-D | | #8 | .169 4.3 | .327 8.3 | | | | | | |
| KN10-10LF-D | | #10 | .209 5.3 | .354 9.0 | | | | | | |

**Box Quantity: (D)=500; (M)=1000**
**For Mylar Tape replace box quantity with (T). Example: KN18-6LF-T**
**UL File #E9809, CSA File #LR4503**

**See pages in back of catalog for complete tool information.**
**Tool and Die Selection Chart on page M42.**

**Maximum Electrical Rating:** 105°C 600 Volts Max.
**Terminal Material:** Copper

## Vinyl Insulated Locking Fork Terminals



- Molded Funnel Entry Insulator
- Internal Barrel Serrations

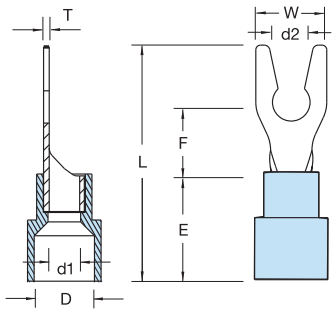


| Catalog Number | Wire Range | Bolt Size (d2) | | Dimension inch mm | | | | | | |
|---|---|---|---|---|---|---|---|---|---|---|
| | | | | W | F | L | E | D | d1 | T |
| KV18-6LF-M | 22-16 A.W.G. 0.5-1.5 mm² | #6 | .146 3.7 | .252 6.4 | .256 6.5 | .866 22.0 | .433 11.0 | .157 4.0 | .067 1.7 | .030 0.75 |
| KV18-8LF-M | | #8 | .169 4.3 | .283 7.2 | | | | | | |
| KV18-10LF-M | | #10 | .209 5.3 | .319 8.1 | | | | | | |
| KV14-6LF-M | 16-14 A.W.G. 1.5-2.5 mm² | #6 | .146 3.7 | .236 6.0 | .256 6.5 | .866 22.0 | .433 11.0 | .177 4.5 | .091 2.3 | .031 0.8 |
| KV14-8LF-M | | #8 | .169 4.3 | .283 7.2 | | | | | | |
| KV14-10LF-M | | #10 | .209 5.3 | .319 8.1 | | | | | | |
| KV10-6LF-D | 12-10 A.W.G. 4-6 mm² | #6 | .146 3.7 | .327 8.3 | .276 7.0 | .992 25.2 | .512 13.0 | .252 6.4 | .134 3.4 | .039 1.0 |
| KV10-8LF-D | | #8 | .169 4.3 | .327 8.3 | | | | | | |
| KV10-10LF-D | | #10 | .209 5.3 | .354 9.0 | | | | | | |

**Box Quantity: (D)=500; (M)=1000**
**For Mylar Tape replace box quantity with (T).**
**Example: KV18-6LF-T**
**UL File #E9809, CSA File #LR4503**

**See pages in back of catalog for complete tool information.**
**Tool and Die Selection Chart on page M42.**

**Maximum Electrical Rating:** 105°C 600 Volts Max.
**Terminal Material:** Copper

### *Tools used with Nylon and Vinyl Insulated Locking Fork Terminals*



ERG2500



KT-2500

Thomas&Betts



© 2002 Thomas & Betts Corporation. Specifications are subject to change without notice. www.tnb.com

## Non-Insulated Locking Fork Terminals



- Chamfered Barrel
- Brazed Seam
- Internal Barrel Serrations

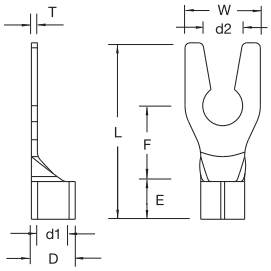


| Catalog Number | Wire Range | Bolt Size (d2) | | Dimension inch mm | | | | | | |
|---|---|---|---|---|---|---|---|---|---|---|
| | | | | W | F | L | E | D | d1 | T |
| K18-6LF-M | 22-16 A.W.G. 0.5-1.5 mm² | #6 | .146 3.7 | .252 6.4 | .256 6.5 | .630 16.0 | .189 4.8 | .134 3.4 | .067 1.7 | .030 0.75 |
| K18-8LF-M | | #8 | .169 4.3 | .283 7.2 | | | | | | |
| K18-10LF-M | | #10 | .209 5.3 | .319 8.1 | | | | | | |
| K14-6LF-M | 16-14 A.W.G. 1.5-2.5 mm² | #6 | .146 3.7 | .236 6.0 | .256 6.5 | .630 16.0 | .189 4.8 | .161 4.1 | .091 2.3 | .031 0.8 |
| K14-8LF-M | | #8 | .169 4.3 | .283 7.2 | | | | | | |
| K14-10LF-M | | #10 | .209 5.3 | .319 8.1 | | | | | | |
| K10-6LF-M | 12-10 A.W.G. 4-6 mm² | #6 | .146 3.7 | .327 8.3 | .276 7.0 | .717 18.2 | .236 6.0 | .220 5.6 | .134 3.4 | .039 1.0 |
| K10-8LF-M | | #8 | .169 4.3 | .327 8.3 | | | | | | |
| K10-10LF-M | | #10 | .209 5.3 | .354 9.0 | | | | | | |

**Box Quantity: (M)=1000**
**For Mylar Tape replace box quantity with (T). Example: K18-6LF-T**
**UL File #E9809**
**CSA File #LR4503**

**See pages in back of catalog for complete tool information.**
**Tool and Die Selection Chart on page M42.**

**Terminal Material:** Copper

## *Tools used with Non-Insulated Locking Fork Terminals*



**ERG2002**



**KT-2500**





© 2002 Thomas & Betts Corporation. Specifications are subject to change without notice. 

## Nylon Insulated Flanged Fork Terminals



- Reduces Slippage in High Vibration Applications
- Metal Insulation Sleeve
- Molded Insulator
- Internal Barrel Serrations
- Funnel Entry

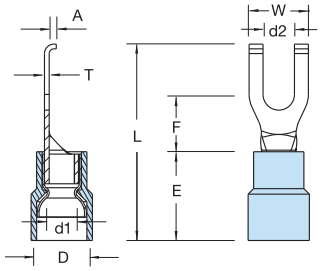


| Catalog Number | Wire Range | Bolt Size (d2) | | Dimension inch mm | | | | | | | |
|---|---|---|---|---|---|---|---|---|---|---|---|
| | | | | W | F | L | E | D | d1 | A | T |
| KN18-6FF-M | 22-16 A.W.G. 0.5-1.5 mm² | #6 | .146 3.7 | .335 8.5 | .283 7.2 | 1.004 25.5 | .433 11.0 | .177 4.5 | .067 1.7 | .059 1.5 | .030 0.75 |
| KN18-8FF-M | | #8 | .169 4.3 | .335 8.5 | .283 7.2 | 1.004 25.5 | | | | | |
| KN18-10FF-M | | #10 | .209 5.3 | .335 8.5 | .283 7.2 | 1.004 25.5 | | | | | |
| KN14-6FF-M | 16-14 A.W.G. 1.5-2.5 mm² | #6 | .146 3.7 | .335 8.5 | .283 7.2 | .945 24.0 | .433 11.0 | .205 5.2 | .091 2.3 | .059 1.5 | .031 0.8 |
| KN14-8FF-M | | #8 | .169 4.3 | .335 8.5 | .283 7.2 | .945 24.0 | | | | | |
| KN14-10FF-M | | #10 | .209 5.3 | .335 8.5 | .283 7.2 | .945 24.0 | | | | | |
| KN10-6FF-D | 12-10 A.W.G. 4-6 mm² | #6 | .146 3.7 | .335 8.5 | .295 7.5 | 1.063 27.0 | .512 13.0 | .276 7.0 | .134 3.4 | .059 1.5 | .039 1.0 |
| KN10-8FF-D | | #8 | .169 4.3 | .335 8.5 | .295 7.5 | 1.063 27.0 | | | | | |
| KN10-10FF-D | | #10 | .209 5.3 | .335 8.5 | .295 7.5 | 1.063 27.0 | | | | | |

**Box Quantity: (D)=500; (M)=1000**
**For Mylar Tape replace box quantity with (T). Example: KN18-6FF-T**
**UL File #E9809, CSA File #LR4503**

**See pages in back of catalog for complete tool information.**
**Tool and Die Selection Chart on page M42.**

**Maximum Electrical Rating:** 105°C 600 Volts Max.
**Terminal Material:** Copper

## Vinyl Insulated Flanged Fork Terminals



- Reduces Slippage in High Vibration Applications
- Molded Funnel Entry Insulator
- Brazed Seam
- Internal Barrel Serrations

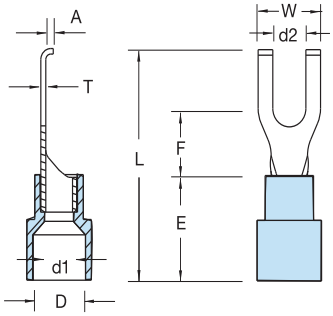


| Catalog Number | Wire Range | Bolt Size (d2) | | Dimension inch mm | | | | | | | |
|---|---|---|---|---|---|---|---|---|---|---|---|
| | | | | W | F | L | E | D | d1 | A | T |
| KV18-6FF-M | 22-16 A.W.G. 0.5-1.5 mm² | #6 | .146 3.7 | .252 6.4 | .201 5.1 | .787 20.0 | .433 11.0 | .157 4.0 | .067 1.7 | .059 1.5 | .030 0.75 |
| KV18-8FF-M | | #8 | .169 4.3 | .335 8.5 | .283 7.2 | 1.004 25.5 | | | | | |
| KV18-10FF-M | | #10 | .209 5.3 | .335 8.5 | .283 7.2 | 1.004 25.5 | | | | | |
| KV14-6FF-M | 16-14 A.W.G. 1.5-2.5 mm² | #6 | .146 3.7 | .335 8.5 | .283 7.2 | .945 24.0 | .433 11.0 | .177 4.5 | .091 2.3 | .059 1.5 | .031 0.8 |
| KV14-8FF-M | | #8 | .169 4.3 | .335 8.5 | .283 7.2 | .945 24.0 | | | | | |
| KV14-10FF-M | | #10 | .209 5.3 | .335 8.5 | .283 7.2 | .945 24.0 | | | | | |
| KV10-6FF-D | 12-10 A.W.G. 4-6 mm² | #6 | .146 3.7 | .299 7.6 | .244 6.2 | 1.004 25.5 | .512 13.0 | .252 6.4 | .134 3.4 | .059 1.5 | .039 1.0 |
| KV10-8FF-D | | #8 | .169 4.3 | .299 7.6 | .244 6.2 | 1.004 25.5 | | | | | |
| KV10-10FF-D | | #10 | .209 5.3 | .299 7.6 | .244 6.2 | 1.004 25.5 | | | | | |

**Box Quantity: (D)=500; (M)=1000**
**For Mylar Tape replace box quantity with (T).**
**Example: KV18-6FF-T**
**UL File #E9809, CSA File #LR4503**

**See pages in back of catalog for complete tool information.**
**Tool and Die Selection Chart on page M42.**

**Maximum Electrical Rating:** 105°C 600 Volts Max.
**Terminal Material:** Copper

### *Tools used with Nylon and Vinyl Insulated Flanged Fork Terminals*



**ERG2500**



**KT-2500**





© 2002 Thomas & Betts Corporation. Specifications are subject to change without notice. **www.tnb.com**

## Non-Insulated Flanged Fork Terminals



- Reduces Slippage in High Vibration Applications
- Chamfered Barrel
- Brazed Seam
- Internal Barrel Serrations

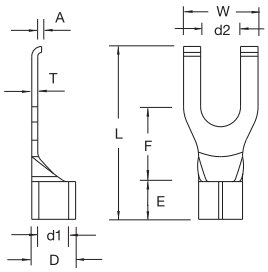


| Catalog Number | Wire Range | Bolt Size (d2) | | Dimension inch mm | | | | | | | |
|---|---|---|---|---|---|---|---|---|---|---|---|
| | | | | W | F | L | E | D | d1 | A | T |
| K18-6FF-M | 22-16 A.W.G. 0.5-1.5 mm² | #6 | .146 3.7 | .335 8.5 | .283 7.2 | .768 19.5 | .189 4.8 | .134 3.4 | .067 1.7 | .059 1.5 | .030 0.75 |
| K18-8FF-M | | #8 | .169 4.3 | .335 8.5 | .283 7.2 | .768 19.5 | | | | | |
| K18-10FF-M | | #10 | .209 5.3 | .335 8.5 | .283 7.2 | .768 19.5 | | | | | |
| K14-6FF-M | 16-14 A.W.G. 1.5-2.5 mm² | #6 | .146 3.7 | .335 8.5 | .283 7.2 | .709 18.0 | .189 4.8 | .161 4.1 | .091 2.3 | .059 1.5 | .031 0.8 |
| K14-8FF-M | | #8 | .169 4.3 | .335 8.5 | .283 7.2 | .709 18.0 | | | | | |
| K14-10FF-M | | #10 | .209 5.3 | .335 8.5 | .283 7.2 | .709 18.0 | | | | | |
| K10-6FF-M | 12-10 A.W.G. 4-6 mm² | #6 | .146 3.7 | .335 8.5 | .295 7.5 | .787 20.0 | .236 6.0 | .220 5.6 | .134 3.4 | .059 1.5 | .039 1.0 |
| K10-8FF-M | | #8 | .169 4.3 | .335 8.5 | .295 7.5 | .787 20.0 | | | | | |
| K10-10FF-M | | #10 | .209 5.3 | .335 8.5 | .295 7.5 | .787 20.0 | | | | | |

**Box Quantity: (M)=1000**
**For Mylar Tape replace box quantity with (T). Example: K18-6FF-T**
**UL FIle #E9809**
**CSA File #LR4503**

**See pages in back of catalog for complete tool information.**
**Tool and Die Selection Chart on page M42.**

**Terminal Material:** Copper

## *Tools used with Non-Insulated Flanged Fork Terminals*



**ERG2002**



**KT-2500**





© 2002 Thomas & Betts Corporation. Specifications are subject to change without notice. 



- For Use in DIN-Style Blade Terminal Blocks
- Metal Insulation Sleeve
- Molded Insulator
- Internal Barrel Serrations
- Funnel Entry

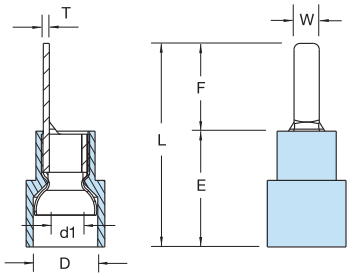


## Nylon Insulated Blade Terminals

| Catalog Number | Wire Range | Dimension inch mm | | | | | | |
|---|---|---|---|---|---|---|---|---|
| | | W | F | L | E | D | d1 | T |
| KN18-10BL-M | 22-16 A.W.G. 0.5-1.5 mm² | .091 2.3 | .394 10.0 | .819 20.8 | .433 11.0 | .177 4.5 | .067 1.7 | .030 0.75 |
| KN18-18BL-M | | .087 2.2 | .709 18.0 | 1.134 28.8 | | | | |
| KN14-10BL-M | 16-14 A.W.G. 1.5-2.5 mm² | .094 2.4 | .394 10.0 | .819 20.8 | .433 11.0 | .205 5.2 | .091 2.3 | .031 0.8 |
| KN14-18BL-M | | .087 2.2 | .709 18.0 | 1.134 28.8 | | | | |
| KN10-10BL-D | 12-10 A.W.G. 4-6 mm² | .110 2.8 | .394 10.0 | .906 23.0 | .512 | .276 | .134 | .039 |

**Box Quantity: (D)=500; (M)=1000**
**For Mylar Tape replace box quantity with (T). Example: KN18-10BL-T**
**UL File #E9809**
**CSA File #LR4503**

**See pages in back of catalog for complete tool information.**
**Tool and Die Selection Chart on page M42.**

**Maximum Electrical Rating:** 105°C 600 Volts Max.
**Terminal Material:** Copper



- For Use in DIN-Style Blade Terminal Blocks
- Molded Funnel Entry Insulator
- Brazed Seam
- Internal Barrel Serrations

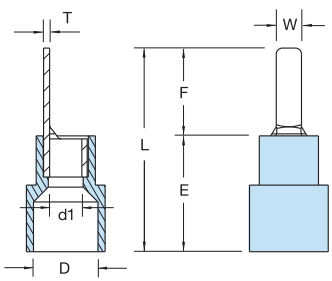


## Vinyl Insulated Blade Terminals

| Catalog Number | Wire Range | Dimension inch mm | | | | | | |
|---|---|---|---|---|---|---|---|---|
| | | W | F | L | E | D | d1 | T |
| KV18-10BL-M | 22-16 A.W.G. 0.5-1.5 mm² | .091 2.3 | .394 10.0 | .819 20.8 | .433 11.0 | .157 4.0 | .067 1.7 | .030 0.75 |
| KV18-18BL-M | | .087 2.2 | .709 18.0 | 1.134 28.8 | | | | |
| KV14-10BL-M | 16-14 A.W.G. 1.5-2.5 mm² | .094 2.4 | .394 10.0 | .819 20.8 | .433 11.0 | .177 4.5 | .091 2.3 | .031 0.8 |
| KV14-18BL-M | | .087 2.2 | .709 18.0 | 1.134 28.8 | | | | |
| KV10-10BL-D | 12-10 A.W.G. 4-6 mm² | .110 2.8 | .394 10.0 | .906 23.0 | .512 13.0 | .252 6.4 | .134 3.4 | .039 1.0 |

**Box Quantity: (D)=500; (M)=1000**
**For Mylar Tape replace box quantity with (T). Example: KV18-10BL-T**
**UL File #E9809**
**CSA File #LR4503**

**See pages in back of catalog for complete tool information.**
**Tool and Die Selection Chart on page M42.**

**Maximum Electrical Rating:** 105°C 600 Volts Max.
**Terminal Material:** Copper

## *Tools used with Nylon and Vinyl Insulated Blade Terminals*



**ERG2500**



**KT-2500**

Thomas&Betts



© 2002 Thomas & Betts Corporation. Specifications are subject to change without notice. **www.tnb.com**

## Nylon Insulated Pin Terminals



- For Use in Pin-Style Terminal Blocks
- Metal Insulation Sleeve
- Molded Insulator
- Internal Barrel Serrations
- Funnel Entry

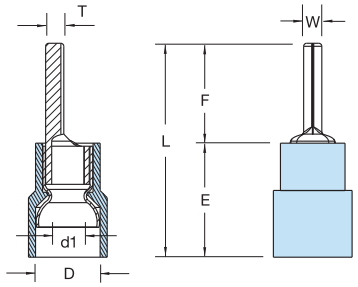


| Catalog Number | Wire Range | Dimension inch mm | | | | | | |
|---|---|---|---|---|---|---|---|---|
| | | W | F | L | E | D | d1 | T |
| KN18-12PT-M | 22-16 A.W.G. 0.5-1.5 mm² | .075 1.9 | .472 12.0 | .898 22.8 | .433 11.0 | .177 4.5 | .067 1.7 | .030 0.75 |
| KN14-12PT-M | 16-14 A.W.G. 1.5-2.5 mm² | .075 1.9 | .472 12.0 | .898 22.8 | .433 11.0 | .205 5.2 | .091 2.3 | .031 0.8 |
| KN10-14PT-D | 12-10 A.W.G. 4-6 mm² | .110 2.8 | .551 14.0 | 1.063 27.0 | .512 13.0 | .276 7.0 | .134 3.4 | .039 1.0 |

**Box Quantity: (D)=500; (M)=1000**
**For Mylar Tape replace box quantity with (T). Example: KN18-12PT-T**
**UL File #E9809**
**CSA File #LR4503**

**See pages in back of catalog for complete tool information.**
**Tool and Die Selection Chart on page M42.**

**Maximum Electrical Rating:** 105°C 600 Volts Max.
**Terminal Material:** Copper

## Vinyl Insulated Pin Terminals



- For Use in Pin-Style Terminal Blocks
- Molded Funnel Entry Insulator
- Brazed Seams
- Internal Barrel Serrations

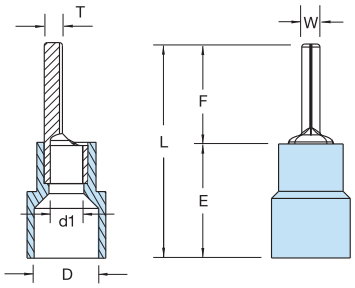


| Catalog Number | Wire Range | Dimension inch mm | | | | | | |
|---|---|---|---|---|---|---|---|---|
| | | W | F | L | E | D | d1 | T |
| KV18-12PT-M | 22-16 A.W.G. 0.5-2.5 mm² | .075 1.9 | .472 12.0 | .898 22.8 | .433 11.0 | .157 4.0 | .067 1.7 | .030 0.75 |
| KV14-12PT-M | 16-14 A.W.G. 1.5-2.5 mm² | .075 1.9 | .472 12.0 | .898 22.8 | .433 11.0 | .177 4.5 | .091 2.3 | .031 0.8 |
| KV10-14PT-D | 12-10 A.W.G. 4-6 mm² | .110 2.8 | .551 14.0 | 1.063 27.0 | .512 13.0 | .252 6.4 | .134 3.4 | .039 1.0 |

**Box Quantity: (D)=500; (M)=1000**
**For Mylar Tape replace box quantity with (T). Example: KV18-12PT-T**
**UL File #E9809**
**CSA File #LR4503**

**See pages in back of catalog for complete tool information.**
**Tool and Die Selection Chart on page M42.**

**Maximum Electrical Rating:** 105°C 600 Volts Max.
**Terminal Material:** Copper

## *Tools used with Nylon and Vinyl Insulated Pin Terminals*



**ERG2500**



**KT-2500**



Thomas&Betts

© 2002 Thomas & Betts Corporation. Specifications are subject to change without notice. **www.tnb.com**

# Spec-Kon®
## Disconnects

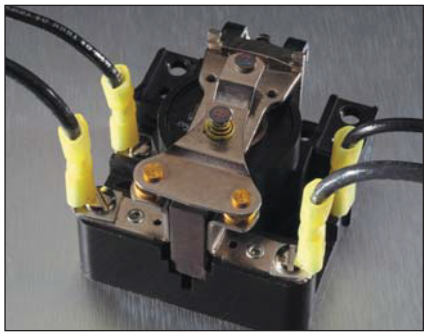

### *Features and Benefits*

### Nylon and Vinyl Disconnects

- *Sleeved barrel*—Ensures barrel does not separate during crimping.
- *Funnel entry insulators*—Funnel entry speeds installation and reduces wire hang up.
- *Partial and fully insulated*—Offers a wide range of products to meet virtually any application

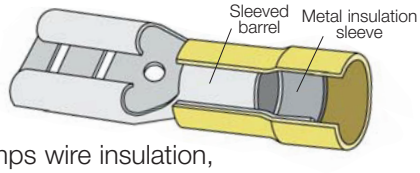


- *Metal insulation sleeve*—Sleeve crimps wire insulation, providing high-vibration resistance and conductor strain relief.
- *Ratings*—UL Listed, cULus Listed, CSA, 600 V at 105ºC for nylon and vinyl.

### *Design Features of Spec-Kon® Disconnects*

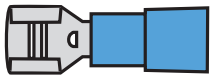

**Female Disconnect**
Provides easy installation and removal from male tabs and auxiliary equipment

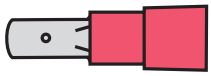

**Male Disconnect**
Tab-style male disconnects are fast and reliable

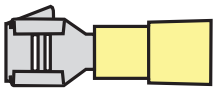

**Female Piggy Back**
Provides the option for multiple circuits using one termination point

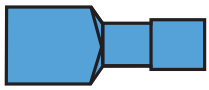

**Fully Insulated Female**
Standard female tab with the safety and reliability of complete insulation

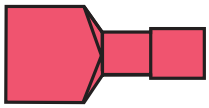

**Fully Insulated Male**
Standard male tab with the safety and reliability of complete insulation

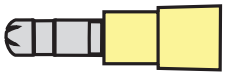

**Bullet Disconnect and Receptacle**
Fast and reliable alternative to the tab style featuring a lower profile to reduce space requirements

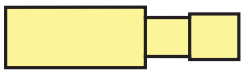

M

Spec-Kon®

## Performance Requirements

| Description | Wire Size (AWG) | | | | | | |
|---|---|---|---|---|---|---|---|
| | #22 | #20 | #18 | #16 | #14 | #12 | #10 |
| **U.L. 310 (Disconnects)** | | | | | | | |
| Test Current for Max. 30˚C Rise (Amps) | 3 | 4 | 7 | 10 | 15 | 20 | 24 |
| Min. Tensile Strength* (Lbs.) | 8 | 13 | 20 | 30 | 50 | 70 | 80 |

*** Pull-out force of the crimped terminal.**

### Applicable Spec-Kon® products meet or exceed the following test specifications:

- UL310 (Disconnects)
- CSA

UL listed products are shown with the applicable logos in the product section.
UL file #E66716 (Disconnects).
CSA file #LR4503

Thomas&Betts


© 2002 Thomas & Betts Corporation. Specifications are subject to change without notice.

## Nylon Insulated Female Disconnects



110 Tab Size



187 Tab Size



250 Tab Size

| Catalog Number | Wire Range | Tab Size inch | Dimension inch mm | | | | | |
|---|---|---|---|---|---|---|---|---|
| | | | W | F | L | B | D | T |
| KN18-110-20FD-M | 22-16 A.W.G. 0.5-1.5 mm² | .110 x .020 | .126 3.2 | .256 6.5 | .772 19.6 | .433 11.0 | .157 4.0 | .012 0.3 |
| KN18-110-32FD-M | | .110 x .032 | .126 3.2 | .256 6.5 | .772 19.6 | | | |
| KN18-187-20FD-M | | .187 x .020 | .197 5.0 | .252 6.4 | .787 20.0 | | | .016 0.4 |
| KN18-187-32FD-M | | .187 x .032 | .197 5.0 | .252 6.4 | .787 20.0 | | | |
| KN18-250FD-M | | .250 x .032 | .260 6.6 | .287 7.3 | .846 21.5 | | | |
| KN14-110-20FD-M | 16-14 A.W.G. 1.5-2.5 mm² | .110 x .020 | .126 3.2 | .252 6.4 | .772 19.6 | .433 11.0 | .197 5.0 | .012 0.3 |
| KN14-110-32FD-M | | .110 x .032 | .126 3.2 | .252 6.4 | .772 19.6 | | | |
| KN14-187-20FD-M | | .187 x .020 | .197 5.0 | .256 6.5 | .787 20.0 | | | .016 0.4 |
| KN14-187-32FD-M | | .187 x .032 | .197 5.0 | .256 6.5 | .787 20.0 | | | |
| KN14-250FD-M | | .250 x .032 | .260 6.6 | .287 7.3 | .846 21.5 | | | |
| KN10-110-20FD-D | 12-10 A.W.G. 4-6 mm² | .110 x .020 | .126 3.2 | .343 8.7 | .866 22.0 | .512 13.0 | .256 6.5 | .016 0.4 |
| KN10-110-32-FD-D | | .110 x .032 | .126 3.2 | .343 8.7 | .866 22.0 | | | |
| KN10-187-20FD-D | | .187 x .020 | .197 5.0 | .256 6.5 | .866 22.0 | | | |
| KN10-187-32FD-D | | .187 x .032 | .197 5.0 | .256 6.5 | .866 22.0 | | | |
| KN10-250FD-D | | .250 x .032 | .260 6.6 | .287 7.3 | .925 23.5 | | | |

**Box Quantity: (D)=500; (M)=1000**
**For Mylar Tape replace box quantity with (T). Example: KN18-110FD-T**
**UL File #E66716**
**CSA File #LR4503**

**See pages in back of catalog for complete tool information.**
**Tool and Die Selection Chart on page M42.**

**Maximum Electrical Rating:** 105°C 600 Volts Max.
**Terminal Material:** Brass with Copper Sleeve

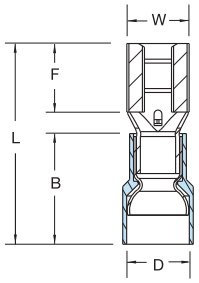


- For Use in Temporary Connections to Male Disconnects & Terminal Blocks
- Multiple Sizes for Range of Applications
- Metal Insulation Sleeve
- Molded Insulator
- Internal Barrel Serrations
- Funnel Entry

## *Tools used with Nylon Insulated Female Disconnects*



ERG2500



KT-2500



Thomas&Betts

© 2002 Thomas & Betts Corporation. Specifications are subject to change without notice. 

## Vinyl Insulated Female Disconnects



110 Tab Size



187 Tab Size



250 Tab Size

| Catalog Number | Wire Range | Tab Size inch | Dimension inch mm | | | | | |
|---|---|---|---|---|---|---|---|---|
| | | | W | F | L | B | D | T |
| KV18-110-20FD-M | 22-16 A.W.G. 0.5-1.5 mm² | .110 x .020 | .126 3.2 | .256 6.5 | .728 19.0 | .413 10.5 | .150 3.8 | .012 0.3 |
| KV18-110-32-FD-M | | .110 x .032 | .126 3.2 | .256 6.5 | .728 19.0 | | | |
| KV18-187-20FD-M | | .187 x .020 | .197 5.0 | .252 6.4 | .764 19.4 | | | .016 0.4 |
| KV18-187-32FD-M | | .187 x .032 | .197 5.0 | .252 6.4 | .764 19.4 | | | |
| KV18-250FD-M | | .250 x .032 | .260 6.6 | .287 7.3 | .819 20.8 | | | |
| KV14-110-20FD-M | 16-14 A.W.G. 1.5-2.5 mm² | .110 x .020 | .126 3.2 | .256 6.5 | .748 19.0 | .413 10.5 | .185 4.7 | .012 0.3 |
| KV14-110-32FD-M | | .110 x .032 | .126 3.2 | .256 6.5 | .748 19.0 | | | |
| KV14-187-20-FD-M | | .187 x .020 | .197 5.0 | .252 6.4 | .764 19.4 | | | .016 0.4 |
| KV14-187-32-FD-M | | .187 x .032 | .197 5.0 | .252 6.4 | .764 19.4 | | | |
| KV14-250FD-M | | .250 x .032 | .260 6.6 | .287 7.3 | .819 20.8 | | | |
| KV10-110-20FD-D | 12-10 A.W.G. 4-6 mm² | .110 x .020 | .126 3.2 | .343 8.7 | .866 22.0 | .512 13.0 | .244 6.2 | .016 0.4 |
| KV10-110-32FD-D | | .110 x .032 | .126 3.2 | .343 8.7 | .866 22.0 | | | |
| KV10-187-20FD-D | | .187 x .020 | .197 5.0 | .256 6.5 | .866 22.0 | | | |
| KV10-187-32FD-D | | .187 x .032 | .197 5.0 | .256 6.5 | .866 22.0 | | | |
| KV10-250FD-D | | .250 x .032 | .260 6.6 | .287 7.3 | .917 23.3 | | | |

**Box Quantity: (D)=500; (M)=1000**
**For Mylar Tape replace box quantity with (T). Example: KV18-110FD-T**
**UL File #E66716**
**CSA File #LR4503**

**See pages in back of catalog for complete tool information.**
**Tool and Die Selection Chart on page M42.**

**Maximum Electrical Rating:** 105°C 300 Volts Max.
**Terminal Material:** Brass with Copper Sleeve

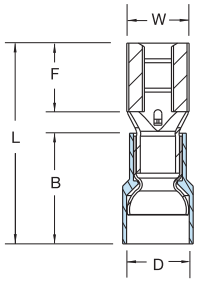


M

Spec-Kon®

- For Use in Temporary Connections to Male Disconnects & Terminal Blocks
- Metal Insulation Sleeve
- Easy Entry Copper Sleeve

## Tools used with Vinyl Insulated Female Disconnects



ERG2500



KT-2500



© 2002 Thomas & Betts Corporation. Specifications are subject to change without notice. www.tnb.com

## Nylon Insulated Male Disconnects



- For Use with Female Disconnects
- Metal Insulation Sleeve
- Molded Insulator
- Internal Barrel Serrations
- Funnel Entry

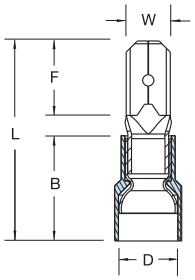


| Catalog Number | Wire Range | Tab Size inch | Dimension inch mm | | | | | |
|---|---|---|---|---|---|---|---|---|
| | | | W | F | L | B | D | T |
| KN18-250MD-M | 22-16 A.W.G. 0.5-1.5 mm² | .250 x .032 | .250 6.35 | .303 7.7 | .866 22.0 | .413 11.0 | .150 4.0 | .016 0.4 |
| KN14-250MD-M | 16-14 A.W.G. 1.5-2.5 mm² | .250 x .032 | .250 6.35 | .303 7.7 | .866 22.0 | .433 11.0 | .197 5.0 | .016 0.4 |
| KN10-250MD-D | 12-10 A.W.G. 4-6 mm² | .250 x .032 | .250 6.35 | .303 7.7 | .945 24.0 | .512 13.0 | .256 6.5 | .016 0.4 |

**Box Quantity: (D)=500; (M)=1000**
**For Mylar Tape replace box quantity with (T). Example: KN18-250MD-T**
**UL File #E66716**
**CSA File #LR4503**

**See pages in back of catalog for complete tool information.**
**Tool and Die Selection Chart on page M42.**

**Maximum Electrical Rating:** 105°C 600 Volts Max.
**Terminal Material:** Brass with Copper Sleeve

## Vinyl Insulated Male Disconnects



- For Use with Female Disconnects
- Metal Insulation Sleeve
- Easy Entry Copper Sleeve

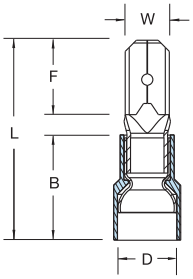


| Catalog Number | Wire Range | Tab Size inch | Dimension inch mm | | | | | |
|---|---|---|---|---|---|---|---|---|
| | | | W | F | L | B | D | T |
| KV18-250MD-M | 22-16 A.W.G. 0.5-1.5 mm² | .250 x .032 | .250 6.35 | .303 7.7 | .858 21.8 | .413 10.5 | .150 3.8 | .016 0.4 |
| KV14-250MD-M | 16-14 A.W.G. 1.5-2.5 mm² | .250 x .032 | .250 6.35 | .303 7.7 | .858 21.8 | .413 10.5 | .185 4.7 | .016 0.4 |
| KV10-250MD-D | 12-10 A.W.G. 4-6 mm² | .250 x .032 | .250 6.35 | .303 7.7 | .945 24.0 | .512 13.0 | .244 6.2 | .016 0.4 |

**Box Quantity: (D)=500; (M)=1000**
**For Mylar Tape replace box quantity with (T). Example: KV18-250MD-T**
**UL File #E66716**
**CSA File #LR4503**

**See pages in back of catalog for complete tool information.**
**Tool and Die Selection Chart on page M42.**

**Maximum Electrical Rating:** 105°C 300 Volts Max.
**Terminal Material:** Brass with Copper Sleeve

## *Tools used with Nylon and Vinyl Insulated Male Disconnects*



**ERG2500**



**KT-2500**



Thomas&Betts

© 2002 Thomas & Betts Corporation. Specifications are subject to change without notice. **www.tnb.com**

## Nylon Insulated Piggy Back Disconnects



- Male and Female Tabs Combined
- Additional conductors may be added to existing installations without changing blocks
- Metal Insulation Sleeve
- Molded Insulator
- Internal Barrel Serrations
- Funnel Entry

| Catalog Number | Wire Range | Tab Size inch | Dimension inch mm | | | | | | | |
|---|---|---|---|---|---|---|---|---|---|---|
| | | | W | W1 | F | F1 | L | B | D | T |
| KN18-250PD-M | 22-16 A.W.G. 0.5-1.5 mm² | .250 x .032 | .260 6.6 | .250 6.35 | .315 8.0 | .323 8.2 | .906 23.0 | .433 11.0 | .157 4.0 | .016 0.4 |
| KN14-250PD-M | 16-14A.W.G. 1.5-2.5 mm² | .250 x .032 | .260 6.6 | .250 6.35 | .315 8.0 | .323 8.2 | .906 23.0 | .433 11.0 | .197 5.0 | .016 0.4 |
| KN10-250PD-D | 12-10A.W.G. 4-6 mm² | .250 x .032 | .260 6.6 | .250 6.35 | .315 8.0 | .323 8.2 | .945 24.0 | .512 13.0 | .256 6.5 | .016 0.4 |

**Box Quantity: (D)=500; (M)=1000**
**UL File #E66716**
**CSA File #LR4503**

**See pages in back of catalog for complete tool information.**
**Tool and Die Selection Chart on page M42.**

**Maximum Electrical Rating:** 105°C 600 Volts Max.
**Terminal Material:** Brass with Copper Sleeve

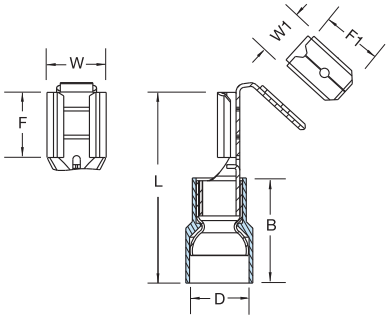


## Vinyl Insulated Piggy Back Disconnects



- Male and Female Tabs Combined
- Additional conductors may be added to existing installations without changing blocks
- Brazed Seam
- Internal Barrel Serrations
- Funnel Entry

| Catalog Number | Wire Range | Tab Size inch | Dimension inch mm | | | | | | | |
|---|---|---|---|---|---|---|---|---|---|---|
| | | | W | W1 | F | F1 | L | B | D | T |
| KV18-250PD-M | 22-16 A.W.G. 0.5-1.5 mm² | .250 x .032 | .260 6.6 | .250 6.35 | .315 8.0 | .323 8.2 | .886 22.5 | .413 10.5 | .150 3.8 | .016 0.4 |
| KV14-250PD-M | 16-14 A.W.G. 1.5-2.5 mm² | .250 x .032 | .260 6.6 | .250 6.35 | .315 8.0 | .323 8.2 | .886 22.5 | .413 10.5 | .185 4.7 | .016 0.4 |
| KV10-250PD-D | 12-10 A.W.G. 4-6 mm² | .250 x .032 | .260 6.6 | .250 6.35 | .315 8.0 | .323 8.2 | .945 24.0 | .512 13.0 | .244 6.2 | .016 0.4 |

**Box Quantity: (D)=500; (M)=1000**
**UL File #E66716**
**CSA File #LR4503**

**See pages in back of catalog for complete tool information.**
**Tool and Die Selection Chart on page M42.**

**Maximum Electrical Rating:** 105°C 300 Volts Max.
**Terminal Material:** Brass with Copper Sleeve

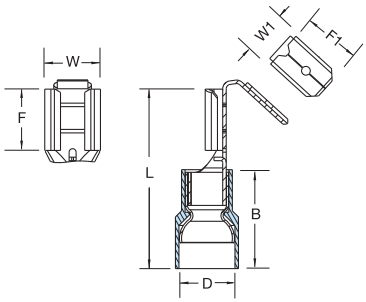


## *Tools used with Nylon and Vinyl Insulated Piggy Back Disconnects*



**ERG2500**



**KT-2500**





© 2002 Thomas & Betts Corporation. Specifications are subject to change without notice. **www.tnb.com**



110 Tab Size



187 Tab Size



250 Tab Size

## Nylon Fully Insulated Female Disconnects

| Catalog Number | Wire Range | Tab Size inch | Dimension inch / mm | | | | | |
|---|---|---|---|---|---|---|---|---|
| | | | W | F | L | B | D | T |
| KNF18-110-20FDM | 22-16 A.W.G. 0.5-1.5 mm² | .110 x .020 | .126 3.2 | .252 6.4 | .756 19.2 | .433 11.0 | .157 4.0 | .012 0.3 |
| KNF18-110-32FDM | | .110 x .032 | .126 3.2 | .252 6.4 | .756 19.2 | | | |
| KNF18-187-20FDM | | .187 x .020 | .197 5.0 | .256 6.5 | .795 20.2 | | | .016 0.4 |
| KNF18-187-32FDM | | .187 x .032 | .197 5.0 | .256 6.5 | .795 20.2 | | | |
| KNF18-250FD-D | | .250 x .032 | .260 6.6 | .303 7.7 | .846 21.5 | | | |
| KNF14-187-20FDM | 16-14 A.W.G. 1.5-2.5 mm² | .187 x .020 | .197 5.0 | .256 6.5 | .795 20.2 | .433 11.0 | .256 6.0 | .016 0.4 |
| KNF14-187-32FDM | | .187 x .032 | .197 5.0 | .256 6.5 | .795 20.2 | | | |
| KNF14-250FD-M | | .250 x .032 | .260 6.6 | .287 7.3 | .846 21.5 | | | |
| KNF10-250FD-D | 12-10 A.W.G. 4-6 mm² | .250 x .032 | .260 6.6 | .287 7.3 | .953 24.2 | .512 13.0 | .256 6.5 | .016 0.4 |

**Box Quantity: (D)=500; (M)=1000**
**For Mylar Tape replace box quantity with (T). Example: KNF18-110-20FD-T**
**UL File #E66716**
**CSA File #LR4503**

**See pages in back of catalog for complete tool information.**
**Tool and Die Selection Chart on page M42.**

**Maximum Electrical Rating:** 105°C 600 Volts Max.
**Terminal Material:** Brass with Copper Sleeve

- Fully Insulated
- Metal Insulation Sleeve
- Molded Insulator
- Internal Barrel Serrations
- Funnel Entry

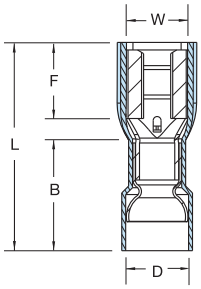


## *Tools used with Nylon Fully Insulated Female Disconnects*



ERG2500



KT-2500



Thomas&Betts

© 2002 Thomas & Betts Corporation. Specifications are subject to change without notice. 



110 Tab Size



187 Tab Size



250 Tab Size

- Fully Insulated
- Brazed Seam
- Internal Barrel Serrations
- Funnel Entry

## Vinyl Fully Insulated Female Disconnects

| Catalog Number | Wire Range | Tab Size inch | Dimension inch mm | | | | | |
|---|---|---|---|---|---|---|---|---|
| | | | W | F | L | B | D | T |
| KVF18-110-20FDM | 22-16 A.W.G. 0.5-1.5 mm² | .110 x .020 | .126 3.2 | .256 6.5 | .748 19.0 | .413 10.5 | .150 3.8 | .012 0.3 |
| KVF18-110-32FDM | | .110 x .032 | .126 3.2 | .256 6.5 | .748 19.0 | | | |
| KVF18-187-20FDM | | .187 x .020 | .197 5.0 | .252 6.4 | .807 20.5 | | | .016 0.4 |
| KVF18-187-32FDM | | .187 x .032 | .197 5.0 | .252 6.4 | .807 20.5 | | | |
| KVF18-250FD-M | | .250 x .032 | .260 6.6 | .287 7.3 | .858 21.8 | | | |
| KVF14-110-20FDM | 16-14 A.W.G. 1.5-2.5 mm² | .110 x .020 | .126 3.2 | .256 6.5 | .748 19.0 | .413 10.5 | .185 4.7 | .012 0.3 |
| KVF14-110-32FDM | | .110 x .032 | .126 3.2 | .256 6.5 | .748 19.0 | | | |
| KVF14-187-20FDM | | .187 x .020 | .197 5.0 | .252 6.4 | .796 20.2 | | | .016 0.4 |
| KVF14-187-32FDM | | .187 x .032 | .197 5.0 | .252 6.4 | .796 20.2 | | | |
| KVF14-250FD-M | | .250 x .032 | .260 6.6 | .287 7.3 | .874 22.2 | | | |
| KVF10-250FD-D | 12-10 A.W.G. 4-6 mm² | .250 x .032 | .260 6.6 | .287 7.3 | .953 24.2 | .492 12.5 | .244 6.2 | .016 0.4 |

**Box Quantity: (D)=500; (M)=1000**
**For Mylar Tape replace box quantity with (T). Example: KVF18-110-20FD-T**
**UL File #E66716**
**CSA File #LR4503**

**See pages in back of catalog for complete tool information.**
**Tool and Die Selection Chart on page M42.**

**Maximum Electrical Rating:** 105°C 300 Volts Max.
**Terminal Material:** Brass with Copper Sleeve
**Tools used with Vinyl Fully Insulated Female Disconnects: ERG2500 and KT2500.**

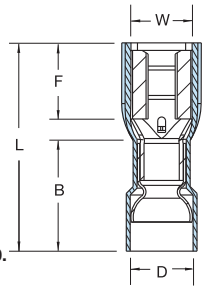




- Fully Insulated
- Metal Insulation Sleeve
- Molded Insulator
- Internal Barrel Serrations
- Funnel Entry

## Nylon Fully Insulated Male Disconnects

| Catalog Number | Wire Range | Tab Size inch | Dimension inch mm | | | | | |
|---|---|---|---|---|---|---|---|---|
| | | | W | F | L | B | D | T |
| KNF18-250MD-D | 22-16 A.W.G. 0.5-1.5 mm² | .250 x .032 | .250 6.35 | .303 7.7 | .976 24.0 | .433 11.0 | .157 4.0 | .016 0.4 |
| KNF14-250MD-D | 16-14 A.W.G. 1.5-2.5 mm² | .250 x .032 | .250 7.7 | .303 24.0 | .976 | .433 11.0 | .197 5.0 | .016 0.4 |
| KNF10-250MD-D | 12-10 A.W.G. 4-6 mm² | .250 x .032 | .250 6.35 | .303 7.7 | 1.016 25.8 | .512 13.0 | .256 6.5 | .016 0.4 |

**Box Quantity: (D)=500**
**UL File #E66716**
**CSA File #LR4503**

**See pages in back of catalog for complete tool information.**
**Tool and Die Selection Chart on page M42.**

**Maximum Electrical Rating:** 105°C 600 Volts Max.
**Terminal Material:** Brass with Copper Sleeve

Yellow Male Disconnect Not Shown.
**Tools used with Nylon Fully Insulated Male Disconnects: ERG2500 and KT2500.**

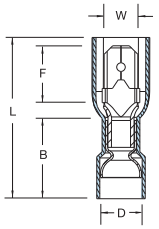


Thomas&Betts



© 2002 Thomas & Betts Corporation. Specifications are subject to change without notice. www.tnb.com



- Fully Insulated
- Molded Funnel Entry Insulator
- Internal Barrel Serrations

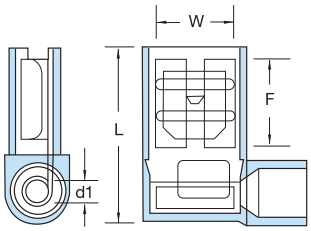


## Nylon Fully Insulated Female Flag Disconnects

| Catalog Number | Wire Range | Tab Size inch | Dimension inch / mm | | | | |
|---|---|---|---|---|---|---|---|
| | | | W | F | L | d1 | T |
| KNF18-187-20FFD-M | 22-18 A.W.G. 0.5-1.5 mm² | .187 x .020 | .197 5.0 | .276 7.0 | .591 15.0 | .063 1.6 | .016 0.4 |
| KNF18-187-32FFD-M | | .187 x .032 | .197 5.0 | .276 7.0 | .591 15.0 | | |
| KNF18-250FFD-M | | .250 x .032 | .260 6.6 | .299 7.6 | .598 15.2 | | |
| KNF14-187-20FFD-M | 16-14 A.W.G. 1.5-2.5 mm² | .187 x .020 | .197 5.0 | .276 7.0 | .598 15.2 | .083 2.1 | .016 0.4 |
| KNF14-187-32FFD-M | | .187 x .032 | .197 5.0 | .276 7.0 | .598 15.2 | | |
| KNF14-250FFD-M | | .250 x .032 | .260 6.6 | .299 7.6 | .598 15.2 | | |

**Box Quantity: (W)=250; (D)=500; (M)=1000**

**See pages in back of catalog for complete tool information.**
**Tool and Die Selection Chart on page M42.**

**Maximum Electrical Rating:** 105˚C 300 Volts Max.
**Terminal Material:** Brass



- Fully Insulated
- Molded Funnel Entry Insulator
- Internal Barrel Serrations

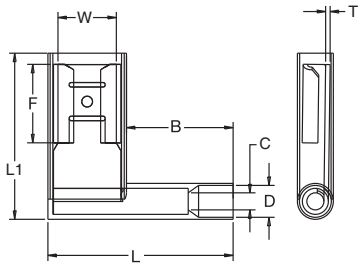


## Nylon Fully Insulated Barrel Flag Female Disconnects

| Catalog Number | Wire Range | Tab Size inch | Dimension inch / mm | | | | | | |
|---|---|---|---|---|---|---|---|---|---|
| | | | W | F | L | L 1 | B | D | T |
| KNF18-187-20BFD-D | 22-18 A.W.G. 0.5-1.5 mm² | .187 x .020 | .197 5.0 | .244 6.2 | .748 19.0 | .555 14.1 | .433 11.0 | .137 3.5 | .015 0.4 |
| KNF18-187-32BFD-D | | .187 x .032 | .197 5.0 | .244 6.2 | .748 19.0 | .555 14.1 | .433 11.0 | .137 3.5 | .015 0.4 |
| KNF18-250BFD-D | | .250 x .032 | .260 6.6 | .307 7.8 | .818 20.8 | .653 16.6 | .433 11.0 | .157 4.0 | .015 0.4 |
| KNF14-250BFD-D | 16-14 A.W.G. | .250 x .032 | .260 6.6 | .307 7.8 | .818 20.8 | .653 16.6 | .433 11.0 | .177 4.5 | .015 0.4 |
| KNF10-250BFD-D | 12-10 A.W.G. | .250 x .032 | .260 6.6 | .307 7.8 | .905 23.0 | .697 17.7 | .511 13.0 | .248 6.3 | .015 0.4 |

**Box Quantity: (W)=250; (D)=500; (M)=1000**
**For Mylar Tape replace box quantity with (T).**
**Example: KVF18-110-20FD-T**

**See pages in back of catalog for complete tool information.**

**Tool and Die Selection Chart on page M42.**
**Maximum Electrical Rating:** 105˚C 600 Volts Max.
**Terminal Material:** Brass

**Tools used with Nylon Fully Insulated Female Flag Disconnects and Nylon Fully Insulated Barrell Flag Female Disconnects: ERG2500F**





© 2002 Thomas & Betts Corporation. Specifications are subject to change without notice. 

## Nylon Fully Insulated Bullet Receptacles



- Fully Insulated
- Metal Insulation Sleeve
- Molded Insulator
- Internal Barrel Serrations
- Funnel Entry

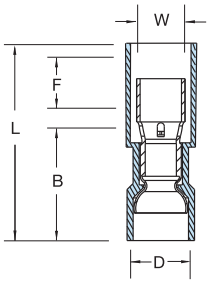


| Catalog Number | Wire Range | Dimension inch mm | | | | | |
|---|---|---|---|---|---|---|---|
| | | W | F | L | B | D | T |
| KNF18-4FB-M | 22-16 A.W.G. 0.5-1.5 mm² | .153 3.9 | .287 7.3 | .992 25.2 | .433 11.0 | .157 4.0 | .016 0.4 |
| KNF14-4FB-M | 16-14 A.W.G. 1.5-2.5 mm² | .153 3.9 | .287 7.3 | .992 25.2 | .433 11.0 | .197 5.0 | .016 0.4 |

**Box Quantity: (M)=1000**
**For Mylar Tape replace box quantity with (T). Example: KNF18-4FB-T**
**UL File #E66716**
**CSA File #LR4503**

**See pages in back of catalog for complete tool information.**
**Tool and Die Selection Chart on page M42.**

**Maximum Electrical Rating:** 105°C 600 Volts Max.
**Terminal Material:** Brass with Copper Sleeve

## Vinyl Fully Insulated Bullet Receptacles



- Brazed Seam
- Internal Barrel Serrations
- Funnel Entry

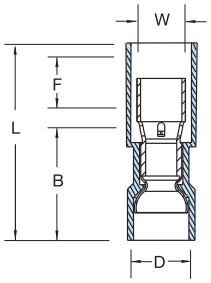


| Catalog Number | Wire Range | Dimension inch mm | | | | | |
|---|---|---|---|---|---|---|---|
| | | W | F | L | B | D | T |
| KVF18-4FB-M | 22-16 A.W.G. 0.5-1.5 mm² | .153 3.9 | .287 7.3 | .917 23.3 | .413 10.5 | .150 3.8 | .016 0.4 |
| KVF14-4FB-M | 16-14 A.W.G. 1.5-2.5 mm² | .153 3.9 | .287 7.3 | .917 23.3 | .413 10.5 | .185 4.7 | .016 0.4 |
| KVF10-5FB-D* | 12-10 A.W.G. 4-6 mm² | .193 4.9 | .276 7.0 | .988 25.1 | .492 12.5 | .244 6.2 | .018 0.45 |

***Not UL listed**
**Box Quantity: (D)=500; (M)=1000**
**For Mylar Tape replace box quantity with (T). Example: KVF18-4FB-T**
**UL File #E66716**
**CSA File #LR4503**

**See pages in back of catalog for complete tool information.**
**Tool and Die Selection Chart on page M42.**

**Maximum Electrical Rating:** 75°C 300 Volts Max.
**Terminal Material:** Brass with Copper Sleeve

## *Tools used with Nylon and Vinyl Insulated Bullet Receptacles*



**ERG2500**



**KT-2500**





© 2002 Thomas & Betts Corporation. Specifications are subject to change without notice. **www.tnb.com**

## Nylon Fully Insulated Bullet Disconnects



| Catalog Number | Wire Range | Dimension inch / mm | | | | | |
|---|---|---|---|---|---|---|---|
| | | W | F | L | B | D | T |
| KNF18-4MB-D | 22-16 A.W.G. 0.5-1.5 mm² | .157 4.0 | .413 10.5 | 1.063 27.0 | .394 10.0 | .157 4.0 | .016 0.4 |
| KNF14-4MB-D | 16-14 A.W.G. 1.5-2.5 mm² | .157 4.0 | .413 10.5 | 1.063 27.0 | .394 10.0 | .177 4.5 | .016 0.4 |

- Fully Insulated
- Metal Insulation Sleeve
- Molded Insulator
- Internal Barrel Serrations
- Funnel Entry

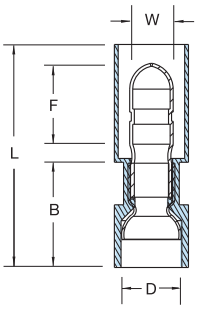


**Box Quantity: (D)=500**
**For Mylar Tape replace box quantity with (T). Example: KNF18-4MB-T**

**See pages in back of catalog for complete tool information.**
**Tool and Die Selection Chart on page M42.**

**Maximum Electrical Rating:** 105°C 600 Volts Max.
**Terminal Material:** Brass with Copper Sleeve

## Vinyl Insulated Bullet Disconnects



| Catalog Number | Wire Range | Dimension inch / mm | | | | | |
|---|---|---|---|---|---|---|---|
| | | W | F | L | B | D | T |
| KV18-4MB-M | 22-16 A.W.G. 0.5-1.5 mm² | .157 4.0 | .413 10.5 | 9.25 23.5 | .413 10.5 | .150 3.8 | .016 0.4 |
| KV14-4MB-M | 16-14 A.W.G. 1.5-2.5 mm² | .157 4.0 | .413 10.5 | 9.25 23.5 | .413 10.5 | .185 4.7 | .016 0.4 |
| KV10-5MB-D | 12-10 A.W.G. 4-6 mm² | .197 5.0 | .335 8.5 | .945 24.0 | .512 13.0 | .244 6.2 | .016 0.4 |

- Brazed Seam
- Internal Barrel Serrations
- Funnel Entry

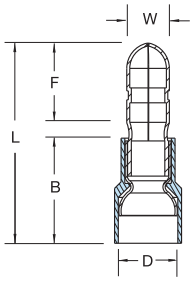


**Box Quantity: (D)=500**
**For Mylar Tape replace box quantity with (T). Example: KV18-4MB-T**
**UL File #E66716**
**CSA File #LR4503**

**See pages in back of catalog for complete tool information.**
**Tool and Die Selection Chart on page M42.**

**Maximum Electrical Rating:** 75°C 300 Volts Max.
**Terminal Material:** Brass with Copper Sleeve

## *Tools used with Nylon and Vinyl Insulated Bullet Disconnects*



**ERG2500**



**KT-2500**



Thomas&Betts

© 2002 Thomas & Betts Corporation. Specifications are subject to change without notice. 

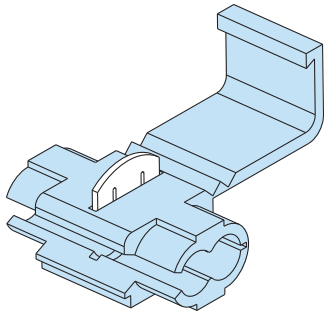

## *Features and Benefits*

### Splices / Wire Joints / Quick Splices

- Ideal for in-line splicing.
- Butt Splices available in Nylon, Vinyl, and non-insulated types.
- Vinyl Quick Splices are color-coded for wire ranges, and provide quick, easy in-line splicing and tapping.
- Nylon wire joint provides long-lasting, durable connection and can accommodate multiple leads. Rated 300 V at 105ºC.
- Available in 22-10 AWG.

## *Design Features of Splices, Wire Joints and Quick Splices*



**Butt Splice**
Ideal for in-line splicing applications

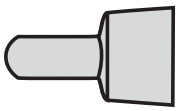

**Wire Joints**
Provides terminating point for a group of wires running in one direction



**Quick Splices**
Great for quick in-line splicing and tapping without stripping the wire insulation

## Performance Requirements

| Description | Wire Size (AWG) | | | | | | | | | | |
|---|---|---|---|---|---|---|---|---|---|---|---|
| | #22 | #20 | #18 | #16 | #14 | #12 | #10 | #8 | #6 | #4 | #2 |
| **U.L. 486A (Terminals)** | | | | | | | | | | | |
| Test Current for Max. 50˚C Rise (Amps) | 9 | 12 | 17 | 18 | 30 | 35 | 50 | 70 | 95 | 125 | 145 |
| Min. Tensile Strength* (Lbs.) | 8 | 13 | 20 | 30 | 50 | 70 | 80 | 90 | 100 | 140 | 160 |

*** Pull-out force of the crimped terminal.**

### Applicable Spec-Kon® products meet or exceed the following test specifications:

- UL486A (Terminals)
- CSA
- UL486C (Splices)

UL listed products are shown with the applicable logos in the product section.
UL file #E9809 (Terminals).
CSA file #LR4503


© 2002 Thomas & Betts Corporation. Specifications are subject to change without notice. 



## Nylon Insulated Butt Splice

| Catalog Number | Wire Range | Dimension inch mm | | |
|---|---|---|---|---|
| | | L | D | d1 |
| KN18-BS-M | 22-16 A.W.G. 0.5-1.5 mm² | 1.075 27.3 | .126 3.2 | .067 1.7 |
| KN14-BS-M | 16-14 A.W.G. 1.5-2.5 mm² | 1.075 27.3 | .150 3.8 | .091 2.3 |
| KN10-BS-D | 12-10 A.W.G 4-6 mm² | 1.110 28.2 | .248 6.3 | .134 3.4 |

- Internal Wire Stop
- Brazed Seams (Yellow -Tubular)
- Chamfered Funnel Entry

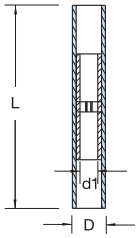


**Box Quantity: (W)=250; (D)=500; (M)=1000**

**See pages in back of catalog for complete tool information.**
**Tool and Die Selection Chart on page M42.**
**UL File #9809**
**CSA File #LR4503**

**Maximum Electrical Rating:** 105˚C 600 Volts Max.
**Connector Material:** Copper



## Vinyl Insulated Butt Splice

| Catalog Number | Wire Range | Dimension inch mm | | |
|---|---|---|---|---|
| | | L | D | d1 |
| KV18-BS-M | 22-16 A.W.G. 0.5-1.5 mm² | .986 24.6 | .157 4.0 | .067 1.7 |
| KV14-BS-M | 16-14 A.W.G. 1.5-2.5 mm² | .986 24.6 | .177 4.5 | .091 2.3 |
| KV10-BS-D | 12-10 A.W.G. 4-6 mm² | 1.024 26.0 | 2.48 6.3 | 1.34 3.4 |

3.2

- Expanded Entry
- Brazed Seams (Yellow -Tubular)
- Internal Barrel Serrations

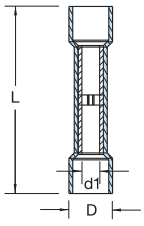


**Box Quantity: (W)=250; (D)=500; (M)=1000**
**UL File #E9809**
**CSA File #LR4503**

**See pages in back of catalog for complete tool information.**
**Tool and Die Selection Chart on page M42.**

**Maximum Electrical Rating:** 75˚C 600 Volts Max.
**Terminal Material:** Copper

## *Tool used with Nylon and Vinyl Insulated Butt Splice*



**ERG2500**





© 2002 Thomas & Betts Corporation. Specifications are subject to change without notice. 

## Non-Insulated Butt Splice



- Chamfered Barrel Entry
- Seamless Barrel Construction
- Wire Stop

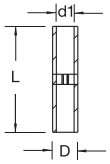


| Catalog Number | Wire Range | Dimension inch mm | | | |
|---|---|---|---|---|---|
| | | L | D | d1 | T |
| K18-BS-M | 22-16 A.W.G. 0.5-1.5 mm² | .591 15.0 | .130 3.3 | .067 1.7 | .031 0.8 |
| K14-BS-M | 16-14 A.W.G. 1.5-2.5 mm² | .591 15.0 | .154 3.9 | .091 2.3 | .031 0.8 |
| K10-BS-M | 12-10 A.W.G. 4-6 mm² | .591 15.0 | .213 5.4 | .134 3.4 | .039 1.0 |

**Box Quantity: (M)=1000**
**UL File #E9809**
**CSA File #LR4503**

**See pages in back of catalog for complete tool information.**
**Tool and Die Selection Chart on page M42.**

**Terminal Material:** Copper Tubular

### *Tool used with Non-Insulated Butt Splice*



**ERG2002**

## Nylon Insulated Wire Joint



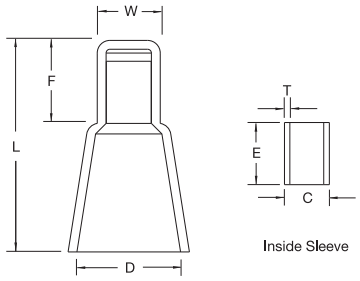


| Catalog Number | Wire Range | Dimension inch mm | | | | | | |
|---|---|---|---|---|---|---|---|---|
| | | W | F | L | D | E | T | C |
| KN18-WJ-M | 22-16 A.W.G. 1.25 mm² | .209 5.3 | .315 8.0 | .827 21.0 | .386 9.8 | .276 7.0 | .020 0.5 | .091 2.3 |
| KN14-WJ-M | 16-14 A.W.G. 2 mm² | .236 6.0 | .354 9.0 | .827 21.0 | .394 10.0 | .276 7.0 | .020 0.5 | .122 3.1 |
| KN10-WJ-D | 12-10 A.W.G. 5.5 mm² | .299 7.6 | .394 10.0 | 1.004 25.5 | .492 12.5 | .295 7.5 | .028 0.7 | .157 4.0 |

**Box Quantity: (W)=250; (D)=500; (M)=1000**
**UL File #E66716**
**CSA File #LR4503**

**See pages in back of catalog for complete tool information.**
**Tool and Die Selection Chart on page M42.**

**Maximum Electrical Rating:** 105°C 300 Volts Max.
**Terminal Material:** Copper Tube

### *Tool used with Nylon Insulated Wire Joint*



**ERG2500WJ**

## Vinyl Insulated Quick Splice

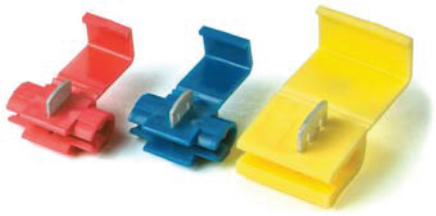

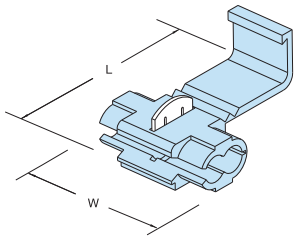


| Catalog Number | Wire Range | Dimension inch mm | | |
|---|---|---|---|---|
| | | W | L | Color |
| KV14-OOQS-D | 22-18 A.W.G. 0.5-1.0 mm² | .787 20.0 | 1.063 27.0 | red |
| KV18-OOQS-D | 18-14 A.W.G. .75-2.5 mm² | .787 20.0 | 1.063 27.0 | blue |
| KV10-OOQS* | 12-10 A.W.G. 4-6 mm² | .807 20.5 | 1.358 34.5 | yellow |

**Box Quantity: (W)=250; (D)=500; (M)=1000**
*** 200 piece quantity only.**
**See pages in back of catalog for complete tool information.**
**Tool and Die Selection Chart on page M42.**

**Maximum Electrical Rating:** 105°C 600 Volts Max.
**Terminal Material:** Brass





© 2002 Thomas & Betts Corporation. Specifications are subject to change without notice. www.tnb.com



ERG2500

## *Comfort Crimp® Terminal Tools*
## *ERG-2500, ERG-2500F, ERG-2002, ERG-2500WJ*

Ergonomic ratchet style hand tool used for installing insulated Spec-Kon® terminals. Specially designed ergonomic handles distributes the crimping force evenly across the user's hands. Helps reduce the risk of Carpal Tunnel Syndrome, the cause of almost one of every two industrial injuries. Ratchet design greatly reduces handle forces over conventional hand tools and incorporates the Shure-Stake® mechanism which ensures full compression every time. Color coded die nests (insulated only) facilitates getting the right terminal in the right nest.



ERG2002



ERG2500WJ

| Catalog Number | Terminal Style | Wire Range |
|---|---|---|
| **ERG-2500** | All Insulated Terminals, Splices, & Disconnects (except Flags) | 22 - 10 AWG |
| **ERG-2002** | All Non-Insulated Terminals, Splices, & Disconnects | 22 - 10 AWG |
| **ERG-2500F** | Nylon Fully Insulated Female Flag Disconnects | 22 - 14 AWG |
| **ERG-2500WJ** | Nylon Insulated Wire Joint | 22 - 10 AWG |

*** Contact Customer Service for availability of this product. Longer lead times may be required.**

### Tool Gauging Requirements

| Catalog Number | Wire Range | Gauging (inches) |
|---|---|---|
| **ERG-2500** | 22 - 16 AWG<br>16 - 14 AWG<br>12 - 10 AWG | .080 - .088<br>.091 - .099<br>.119 - .127 |
| **ERG-2002** | 22 - 16 AWG<br>16 - 14 AWG<br>12 - 10 AWG | .067 - .062<br>.089 - .084<br>.115 - .110 |
| **ERG-2500F** | 22 - 14 AWG | – |
| **ERG-2500WJ** | 22 - 10 AWG | – |

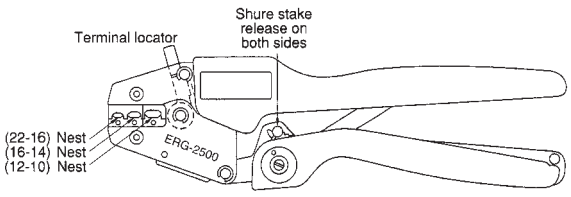


- Installs Nylon and Vinyl Insulated Terminals, Disconnects, and Splices 22-10 AWG
- The force required to release the Shure-Stake® mechanism should be no less than 20 lbs.

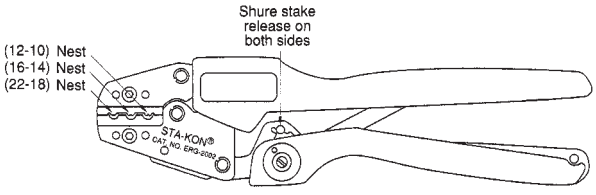


- Installs Non-Insulated Terminals, Disconnects, and Splices 22-10 AWG
- The force required to release the Shure-Stake® mechanism should be no less than 15 lbs.





© 2002 Thomas & Betts Corporation. Specifications are subject to change without notice. 

## *Plier Type Tools*
## *WT111M and WT112M*



**WT111M**



**WT112M**

Economical plier type hand tool used for installing non-insulated and insulated Spec-Kon® terminals. Range of sizes include 22 AWG through 10 AWG. Nose of the tool is equipped with wire cutters for convenience.

| Catalog Number | Description | Std. Pkg | Wt. each |
|---|---|---|---|
| **WT111M** | Non-Insulated Plier Tool with Cutter for 22-10 AWG | 1 | 1 |
| **WT112M** | Insulated and Non-Insulated Plier Tool with Cutter for 22-10 AWG | 1 | 1 |

- These tools are designed with wire cutters for customer convenience.

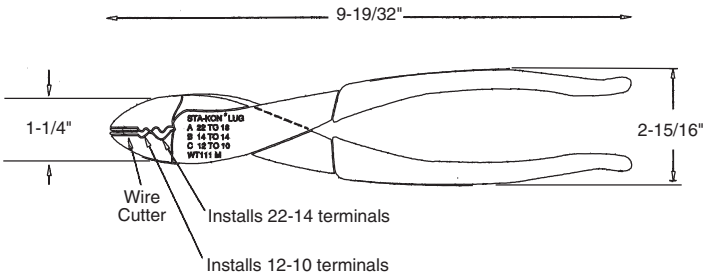


- WT111M - Installs 22-10 AWG non-insulated Spec-Kon® Terminals
- Gauging for 22-14 AWG 0.027 - 0.053 in.
- Gauging for 12-10 AWG 0.072 - 0.098 in.

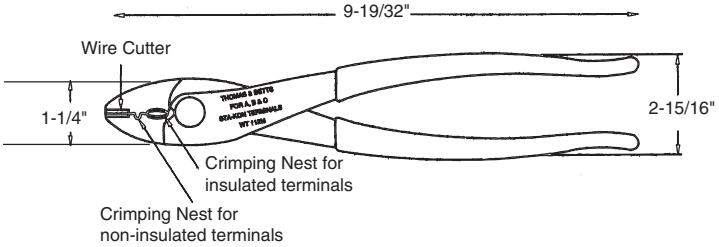


- WT112 M - Installs insulated and non-insulated Spec-Kon® terminals, splices, disconnects, and wire joints 22-10 AWG
- Gauging for insulated terminals .092 - .104
- Gauging for non-insulated terminals .044 - .056





© 2002 Thomas & Betts Corporation. Specifications are subject to change without notice. www.tnb.com



TBM6



TBM6S

## *Toggle Type Tools TBM6 and TBM6S*

Toggle type hand tool for installing large insulated and non-insulated Spec-Kon® terminals. Terminal size ranges from #8 AWG through #2 AWG MCM. Interchangeable dies are ordered separately. The TBM6S features the Shure-Stake® mechanism which ensures full compression every time.

| Catalog Number | Terminal Size For use with Spec-Kon® | Std. Pkg | Wt. each |
|---|---|---|---|
| **TBM6** | 8 - 2 AWG | 1 | 9 |
| **TBM6S** | 8 - 2 AWG | 1 | 9 |

### Installing Dies

| Nest Stationary Die | Indentor Movable Die | Terminal Size | Gauging (inches) |
|---|---|---|---|
| **Installing dies for non-insulated Spec-Kon® terminals** | | | |
| **11805** | **11802** | 8 - 6 AWG | .157-.177 |
| **11806** | **11802** | 4 AWG | .196-.216 |
| **11807** | **11802** | 2 AWG | .224-.244 |
| **Installing dies for insulated Spec-Kon® terminals** | | | |
| **11822** | – | 8 AWG | .192 - .212 |
| **11823** | – | 6 AWG | .244-.264 |

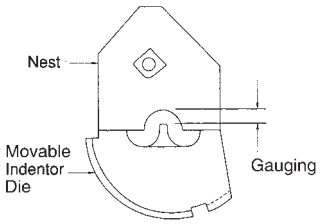


- For use with non-insulated terminals Cat No. TBM6 and TBM6S

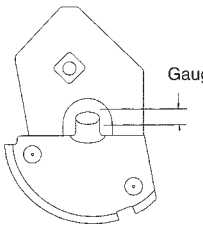


- For use with insulated terminals Cat No. TBM6 and TBM6S





© 2002 Thomas & Betts Corporation. Specifications are subject to change without notice. 

# Spec-Kon®
## Automated Tools

NEW



## *Universal Applicator*

The Universal Applicator from Thomas & Betts offers a unique opportunity to use the range of quality Spec-Kon tape-mounted terminals on your own machine. If you have the press already, there's no need for additional costly investments on your plant floor to convert to another terminal. Our applicator will handle the entire range of Mylar-tape fed terminals offered in the Spec-Kon product line, and allows you more flexibility on your production line. Fast and simple. If you have the press, we've got the applicator.



The new Spec-Kon Universal Applicator is designed for quick terminal conversions in plant equipment such as the Applitek press.

**Spec-Kon® Universal Applicator includes these prominent features:**

- Allows industry-standard presses to use Spec-Kon® Terminal Products (AMP-compatible).
- Includes stand-alone presses.
- Also compatible with major brands of wire processing equipment.
- One single part – no additional accessories needed (excluding dies).
- Quick-change of tooling / dies in minutes – simply done with an Allen wrench.
- Convenient Crimp Height adjustment for range of crimping force fine-tuning.
- 22-10 AWG Range.
- Crimps Insulated and Uninsulated Spec-Kon® terminals.
- Crimps Nylon and Vinyl insulation terminals.
- All-metallic construction for years of use.
- Creates UL Listed Crimps.
- One year warranty, excluding dies.

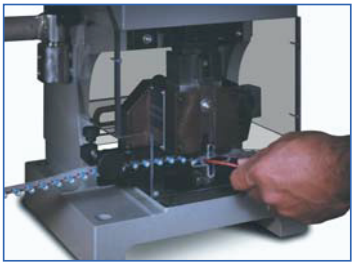

M

Spec-Kon®

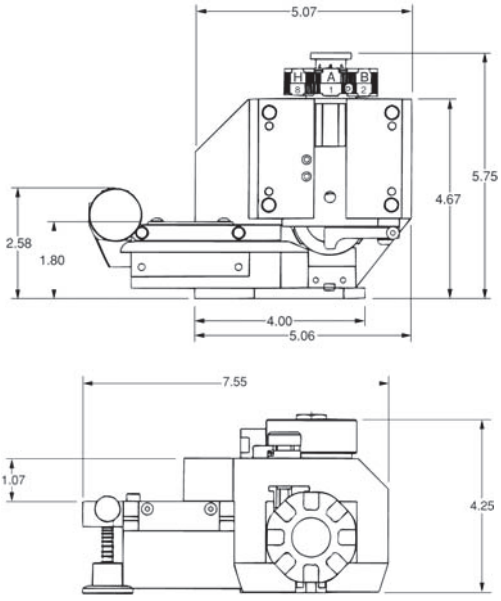


| Catalog Number | Description | Std. Pkg | Wt. each |
|---|---|---|---|
| **KT2500UA** | Spec-Kon® Universal Applicator | 1 | 17 lbs. |

AMP is a registered trademark of Tyco Electronics Corporation

### Die Chart

| Catalog Number | Description | Wire Range |
|---|---|---|
| **KT-18Z** | Insulated Terminals, Disconnects, & Splices | 22-16 AWG |
| **KT-14Z** | Insulated Terminals, Disconnects, & Splices | 16-14 AWG |
| **KT-10Z** | Insulated Terminals, Disconnects, & Splices | 12-10 AWG |
| **KTU-18Z** | Insulated Terminals, Disconnects, & Splices | 22-16 AWG |
| **KTU-14Z** | Insulated Terminals, Disconnects, & Splices | 16-14 AWG |
| **KTU-10Z** | Insulated Terminals, Disconnects, & Splices | 12-10 AWG |

Dimensions: 7.5" x 5.75" x 4.25"
Range: 22 AWG - 10 AWG Insulated and Noninsulated
See instruction manual for complete maintenance, installation and operating characteristics for this tool.

Thomas&Betts



© 2002 Thomas & Betts Corporation. Specifications are subject to change without notice. **www.tnb.com**

**Spec-Kon®**
**Automated Tools**

NEW



KT-2500 with reel and foot switch

## *Bench Mounted Tool for Mylar Tape – KT-2500*

Compact, pneumatically operated bench mounted tool for crimping insulated and non-insulated Spec-Kon® terminals on mylar tape. Dies are color coded to match terminal insulation. Unit comes with fully guarded foot pedal and clear plastic safety guard over the die area for added safety. Unit incorporates the Shure-Stake® mechanism which ensures full compression every time.

| Catalog Number | Description | Std. Pkg |
|---|---|---|
| **KT-2500** | Bench Mounted Crimping Tool for Mylar Tape | 1 |

Space Requirement: 30"w x 20"h x 20"d
Weight: 55 lbs.
Wire Range: 22-10 AWG
Air Pressure: 90-125 psi input air supply

### Installing Dies

| Catalog Number | Terminal Style | Wire Range | Gauging (inches) |
|---|---|---|---|
| **Installing dies for insulated Spec-Kon® terminals** | | | |
| **KT-18** | Insulated Terminals & Disconnects | 22-16 AWG | .105 - .109 |
| **KT-14** | Insulated Terminals & Disconnects | 16-14 AWG | .115 - .119 |
| **KT-10** | Insulated Terminals & Disconnects | 12-10 AWG | .134 - .138 |
| **Installing dies for non-insulated Spec-Kon® terminals** | | | |
| **KTU-18** | Non-Insulated Terminals | 22-16 AWG | .072 - .077 |
| **KTU-14** | Non-Insulated Terminals | 16-14 AWG | .096 - .101 |
| **KTU-10** | Non-Insulated Terminals | 12-10 AWG | .126 - .131 |

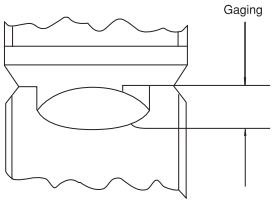


Insulated Terminals

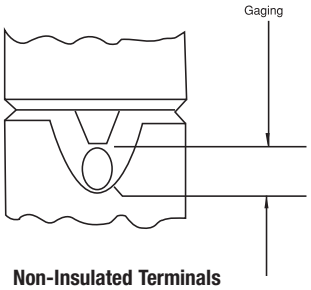


Non-Insulated Terminals

M

Spec-Kon®

Thomas&Betts

© 2002 Thomas & Betts Corporation. Specifications are subject to change without notice. **www.tnb.com**



## ERG3000 Battery Powered Tool

Compact, portable, battery operated tool for crimping loose piece insulated and non-insulated Spec-Kon® terminals. Dies are color coded to match terminal insulation. Multi-nested die used for non-insulated which reduces setup time. Unit incorporates the Shure-Stake® mechanism which ensures full compression every time.

| Catalog Number | Description | Wt. (lb.) |
|---|---|---|
| **Standard Components** | *Note: The part number ERG-3000 refers to a complete kit consisting of one ERG-3001,one ERG-3002, two ERG-3003, one ERG-3004, and one ERG-3005.* | |
| **ERG-3001** | Base Unit | 11.0 |
| **ERG-3002** | Hose & Tool Head Assembly | 3.5 |
| **ERG-3003** | NiCd Battery | 1.3 |
| **ERG-3004** | 15 min. Battery Charge | 3.0 |
| **ERG-3005** | Carrying Case | 6.3 |
| **ERG-3006** | AC Adapter | 7.0 |
| **ERG-3007** | Benchmount | 1.0 |
| **ERG-3008** | Switch | 2.5 |
| **ERG-3000** | Complete Kit (see note below) | 26.4 |

- Start button initiates crimping work cycle.
- Safety catch protects fingers when changing die sets.
- Compact tool head operates in tight spaces and weighs just 1.65 pounds to reduce fatigue.
- Swivel head improves access to small spaces.
- Control lever opens jaws for terminal installation and die change.
- Interchangeable dies accommodate Spec-Kon® terminals from 22-10 AWG.
- Easy-to-see indicator lamps show when ERG 3000 is ready to operate or in a work cycle.
- Portable base power unit houses the battery, hydraulic pump, fluid reservoir, and electronic control unit.
- Durable, flexible 8.2 foot hose connects the tool head to the base power unit for extra reach.

## Installing Dies

| Catalog Number | Terminal Style | Wire Range | Gauging (inches) |
|---|---|---|---|
| **Installing dies for insulated Spec-Kon® terminals** | | | |
| **KT-18Y** | Insulated Terminals & Disconnects | 22-16 AWG | .105 - .109 |
| **KT-14Y** | Insulated Terminals & Disconnects | 16-14 AWG | .115 - .119 |
| **KT-10Y** | Insulated Terminals & Disconnects | 12-10 AWG | .134 - .138 |
| **Installing dies for non-insulated Spec-Kon® terminals** | | | |
| **KTU-2214Y** | Non-Insulated Terminals (Two Nested Die Set) | 22-16 AWG<br>16-14 AWG | .072 - .077<br>.096 - .101 |
| **KTU-10Y** | Non-Insulated Terminals | 12-10 AWG | .126 - .131 |

### Technical Data

**Base Unit**

| | |
|---|---|
| Working pressure | 3625 psi |
| Power supply | NiCd Battery 12 V DC or AC/DC converter 110 V 60 Hz |
| Work cycle | 1.5-3 seconds |
| Weight (with battery) | 11 lb. (without tool/hose pack) |
| Dimensions | 13.77"L x 7.28" W x 5.12" D |
| Temperature range | -4° to 122°F |

**Tool Head Assembly**

| | |
|---|---|
| Press force | 3371 lbf |
| Weight (tool only) | 1.65 lb. |
| Diameter of handle | 1.61 in. |
| Length of handle | 8.86 in. |
| Length of hose | 7.22 ft. |

**Battery**

| | |
|---|---|
| Type | NiCd 12 V, rechargeable |
| Recharging time | 15 min. |
| Number of recharges | 1000 |





© 2002 Thomas & Betts Corporation. Specifications are subject to change without notice. 



13500 with foot switch

## *Bench Mounted Tool – 13500*

Compact, pneumatically operated bench mounted tool for crimping loose piece insulated and non-insulated Spec-Kon® terminals. Dies are color coded to match terminal insulation. Multi-nested die used for non-insulated which reduces setup time. Unit incorporates the Shure-Stake® mechanism which ensures full compression every time.

| Catalog Number | Description | Std. Pkg |
|---|---|---|
| **13500** | Bench Mounted Crimping Tool | 1 |

Space Requirement: 8" X 12"
Weight: 10-12 lbs.
Wire Range: 8AWG - 2AWG Insulated & Uninsulated Terminals.
Air Pressure: 85-100 psi

### Installing Dies

| Catalog Number | Terminal Style | Wire Range | Gauging (inches) |
|---|---|---|---|
| **Installing dies for insulated Spec-Kon® terminals** | | | |
| **KT-18X**<br>**KT-14X**<br>**KT-10X** | Insulated Terminals & Disconnects | 22-16 AWG<br>16-14 AWG<br>12-10 AWG | .105 - .109<br>.115 - .119<br>.134 - .138 |
| **Installing dies for non-insulated Spec-Kon® terminals** | | | |
| **KTU-2210X*** | Non-Insulated Terminals<br>(Three Nested Die Set) | 22-16 AWG<br>16-14 AWG<br>12-10 AWG | .072 - .077<br>.096 - .101<br>.126 - .131 |

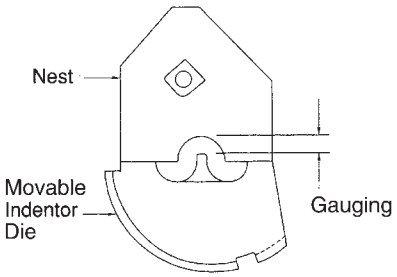


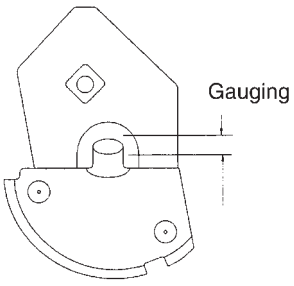


- For use with non-insulated terminals Cat No. TBM6 and TBM6S

- For use with insulated terminals Cat No. TBM6 and TBM6S

M
Spec-Kon®

Thomas&Betts

© 2002 Thomas & Betts Corporation. Specifications are subject to change without notice. 

## Tool and Die Selection Chart

| Spec-Kon® Terminals | | Plier Tool | Ergonomic Hand Tool | KT-2500 Pneumatic Tool Die Part Numbers | | | 13500 Pneumatic Tool Die Part Numbers | | | Erg-3000 Power Hand Tool Die Part Numbers | | |
|---|---|---|---|---|---|---|---|---|---|---|---|---|
| **Nylon Terminal** (22-10 AWG) | KN or KNF | WT112M | ERG-2500 | KT-18 | KT-14 | KT-10 | KT-18X | KT-14X | KT-10X | KT-18Y | KT-14Y | KT-10Y |
| **Nylon Butt Splice** | | WT112M | ERG-2500 | N/A | N/A | N/A | KT-18X | KT-14X | KT-10X | KT-18Y | KT-14Y | KT-10Y |
| **Nylon Disconnect** | | WT112M | ERG-2500 | KT-18 | KT-14 | KT-10 | KT-18X | KT-14X | KT-10X | KT-18Y | KT-14Y | KT-10Y |
| **Nylon Terminal** (8-6 AWG) | | TBM6 | N/A | KT-8 | KT-6 | N/A | N/A | N/A | N/A | N/A | N/A | N/A |
| **Vinyl Terminal** (22-10 AWG) | KV or KVF | WT112M | ERG-2500 | KT-18 | KT-14 | KT-10 | KT-18X | KT-14X | KT-10X | KT-18Y | KT-14Y | KT-10Y |
| **Vinyl Butt Splice** | | WT112M | ERG-2500 | KT-18 | KT-14 | KT-10 | KT-18X | KT-14X | KT-10X | KT-18Y | KT-14Y | KT-10Y |
| **Vinyl Disconnect** | | WT112M | ERG-2500 | KT-18 | KT-14 | KT-10 | KT-18X | KT-14X | KT-10X | KT-18Y | KT-14Y | KT-10Y |
| **Non Insulated Terminal** (22-10 AWG) | K | WT111M | ERG-2002 | KTU-18 | KTU-14 | KTU-10 | KTU-2210X | KTU-2210X | KTU-2210X | KTU-2214Y KTU-10Y | KTU-2214Y KTU-10Y | KTU-2214Y KTU-10Y |
| **Non Insulated Butt Splice** | | WT111M | ERG-2002 | N/A | N/A | N/A | KTU-2210X | KTU-2210X | KTU-2210X | KTU-2214Y KTU-10Y | KTU-2214Y KTU-10Y | KTU-2214Y KTU-10Y |
| **Non Insulated Terminal** (8-6 AWG) | | TBM6 | N/A | N/A | N/A | N/A | KTU-8 | KTU-6 | N/A | N/A | N/A | N/A |
| **Wire Joints** | KN or KNF | WT112M | ERG-2500WJ | N/A | N/A | N/A | N/A | N/A | N/A | N/A | N/A | N/A |
| **Flag Terminals** | | N/A | ERG-2500F | N/A | N/A | N/A | N/A | N/A | N/A | N/A | N/A | N/A |

## Strip Length Chart

| Description | Terminal Series | Wire Strip Length |
|---|---|---|
| **Non-Insulated Terminals** | K18<br>K14<br>K10<br>K8<br>K6<br>K4<br>K2 | 1/4”<br>1/4”<br>5/16”<br>3/8”<br>7/16”<br>1/2"<br>9/16" |
| **Vinyl Insulated Terminals** | KV18<br>KV14<br>KV10<br>KV8<br>KV6 | 1/4”<br>1/4”<br>5/16”<br>3/8"<br>7/16" |
| **Nylon Insulated Terminals** | KN18<br>KN14<br>KN10<br>KN8<br>KN6 | 1/4”<br>1/4”<br>5/16”<br>3/8”<br>7/16” |
| **Vinyl Insulated Disconnects** | KV18<br>KV14<br>KV10 | 1/4”<br>1/4”<br>5/16” |
| **Nylon Insulated Disconnects** | KN18<br>KN14<br>KN10 | 1/4”<br>1/4”<br>5/16” |
| **Vinyl Insulated Butt Splices** | KV18<br>KV14<br>KV10 | 5/16”<br>5/16”<br>5/16” |
| **Nylon Insulated Butt Splices** | KN18<br>KN14<br>KN10 | 1/4”<br>1/4”<br>1/4” |
| **Nylon Wire Joints** | K18<br>K14<br>K10 | 9/32”<br>9/32”<br>11/32” |





© 2002 Thomas & Betts Corporation. Specifications are subject to change without notice. www.tnb.com

## Stud Size Chart

| Standard Stud Size U.S | | Stud Diameter Inches mm | Terminal Hole Dia. Inches mm | Spec-Kon Stud Size Part No. Designation |
|---|---|---|---|---|
| | #2<br>M2 | .086<br>2.18 | .090<br>2.29 | 2 |
| | #4<br>M2,5 | .112<br>2.84 | .118<br>3.00 | 4 |
| | #5<br>M3 | .125<br>3.18 | .127<br>3.23 | 5 |
| | #6<br>M3,5 | .138<br>3.51 | .146<br>3.71 | 6 |
| | #8<br>M4 | .164<br>4.17 | .173<br>4.39 | 8 |
| | #10<br>M5 | .190<br>4.83 | .198<br>5.03 | 10 |
| | 1/4<br>M6 | .250<br>6.35 | .270<br>6.86 | 14 |
| | 5/16<br>M8 | .312<br>7.92 | .330<br>8.38 | 56 |
| | 3/8<br>M10 | .375<br>9.53 | .385<br>9.78 | 38 |
| | 1/2<br>M12 | .500<br>12.7 | .520<br>13.21 | 12 |
| | 5/8<br>M16 | .625<br>15.88 | .650<br>16.51 | 58 |
| | 3/4<br>M18 | .750<br>19.05 | .810<br>20.57 | 34 |

## Common Conductor Size Chart

| Size | No. of Strands | Individual Strand Size | Conductor Size | |
|---|---|---|---|---|
| | | Inches<br>mm | Inches<br>mm | Circl. Mil Area<br>mm |
| **22AWG** | 7 | .0096<br>0.24 | .028<br>0.74 | 640<br>0.74 |
| **20AWG** | 10 | .0100<br>0.25 | .038<br>0.97 | 1020<br>0.519 |
| **18AWG** | 16 | .0100<br>0.25 | .048<br>1.22 | 1620<br>0.823 |
| **16AWG** | 26 | .0100<br>0.25 | .060<br>1.52 | 2580<br>1.310 |
| **14AWG** | 7 | .0242<br>0.61 | .073<br>1.85 | 4110<br>2.080 |
| **12AWG** | 7 | .0305<br>0.77 | .092<br>2.34 | 6530<br>3.310 |
| **10AWG** | 7 | .0385<br>0.98 | .116<br>2.95 | 10,380<br>5.261 |
| **8AWG** | 7 | .0486<br>1.23 | .146<br>3.71 | 16,510<br>8.367 |
| **6AWG** | 7 | .0612<br>1.55 | .184<br>4.67 | 26,240<br>13.30 |
| **4AWG** | 7 | .0772<br>1.96 | .232<br>5.89 | 41,740<br>21.15 |
| **2AWG** | 7 | .0974<br>2.47 | .292<br>7.42 | 66,360<br>33.62 |
| **1AWG** | 19 | .0664<br>1.69 | .332<br>8.43 | 83,690<br>42.41 |
| **1/10AWG** | 19 | .0745<br>1.89 | .373<br>9.47 | 105,600<br>53.49 |
| **2/0AWG** | 19 | .0837<br>2.13 | .418<br>10.62 | 133,100<br>67.43 |
| **3/0AWG** | 19 | .0940<br>2.39 | .470<br>11.94 | 167,800<br>85.01 |
| **4/0AWG** | 19 | .1055<br>2.68 | .528<br>13.41 | 211,600<br>107.2 |
| **250MCM** | 37 | .0822<br>2.09 | .575<br>14.61 | 250,000<br>127 |
| **300MCM** | 37 | .0900<br>2.29 | .630<br>16.00 | 300,000<br>152 |
| **350MCM** | 37 | .0973<br>2.47 | .681<br>17.29 | 350,000<br>177 |
| **400MCM** | 37 | .1040<br>2.64 | .728<br>18.49 | 400,000<br>203 |
| **500MCM** | 37 | .1162<br>2.95 | .813<br>20.65 | 500,000<br>253 |
| **600MCM** | 61 | .0992<br>2.52 | .893<br>22.68 | 600,000<br>304 |
| **750MCM** | 61 | .1109<br>2.82 | .998<br>25.35 | 750,000<br>380 |
| **800MCM** | 61 | .1145<br>2.91 | 1.031<br>26.19 | 800,000<br>405 |
| **1000MCM** | 61 | .1280<br>3.25 | 1.152<br>29.26 | 1,000,000<br>507 |



© 2002 Thomas & Betts Corporation. Specifications are subject to change without notice. 

# FS Boxes and Covers











## Applications :

- FS boxes are CSA approved for wet locations
- FS device boxes are installed in applications that require a rugged unit to accept wiring devices, switches, electronic components and terminal blocks
- FS device boxes provide spacious accessible wiring chambers that are a convenient location to maintain or change a system; pull conductors; make splices or branch conduits
- FS device boxes, when used with an appropriate cover, provide a raintight installation
- Both weatherproof and dry location covers are available

## Features/Benefits :

- FS device boxes are sand casted or die casted using copper free (less than 0.004 copper content) aluminum alloys.
- FS device boxes incorporate external hub design that provides maximum wiring capacity
- FS device boxes have precision molded NPT threaded hubs allowing trouble-free field installation of rigid conduit
- FS device boxes are available in 1-7/8 in. and 2-5/8 in. depth
- Carlon® nonmetallic weatherproof FS covers are UV resistant, flame retardant and non-corrosive

## Standard Materials :

- CIFS and CIFD device boxes: sand cast, copper free aluminum (less than 0.004 copper content)
- CIFSU: die cast, copper free aluminum (less than 0.004 copper content)
- FS covers: die cast aluminum, sand cast aluminum or nonmetallic

## Compliances :

Compliances as noted on each page of the catalogue include:

- CSA Certified
- UL Listed

# FS Boxes and Covers



CIFDC-1/2

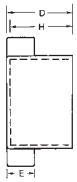


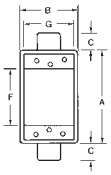


| Cat. No. | Hub Size | No. of Gangs | No. of Lugs | A (in.) | B (in.) | C (in.) | D (in.) | E (in.) | F (in.) | G (in.) | H (in.) | Cu (in.) |
|---|---|---|---|---|---|---|---|---|---|---|---|---|
| **FDC Boxes - 2-5/8 in. Deep** (Cast Aluminum) | | | | | | | | | | | | |
| CIFDC-1/2 | 2 x 1/2 | 1 | 2 | 4-5/16 | 2-13/16 | 15/16 | 2-5/8 | 1-3/8 | 2-7/8 | 2-3/8 | 2-5/32 | 22.5 |
| CIFDC-3/4 | 2 x 3/4 | 1 | 2 | 4-5/16 | 2-13/16 | 15/16 | 2-5/8 | 1-3/8 | 2-7/8 | 2-3/8 | 2-13/32 | 22.5 |
| CIFDC-1 | 2 x 1 | 1 | 2 | 4-5/16 | 2-13/16 | 1-3/8 | 2-5/8 | 1-5/8 | 2-7/8 | 2-3/8 | 2-13/32 | 22.5 |



CIFS-1G




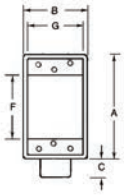




CIFS-2G

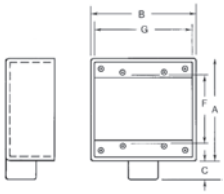




CIFS-3G

| Cat. No. | Hub Size | No. of Gangs | No. of Lugs | A (in.) | B (in.) | C (in.) | D (in.) | E (in.) | F (in.) | G (in.) | H (in.) | Cu (in.) |
|---|---|---|---|---|---|---|---|---|---|---|---|---|
| **FS Boxes - 1-7/8 in. Deep** (Cast Aluminum) | | | | | | | | | | | | |
| CIFS-1G-1/2 | 1 x 1/2 | 1 | 3 | 4-5/16 | 2-13/16 | 13/16 | 1-7/8 | 1-1/4 | 2-7/8 | 2-5/16 | 1-9/16 | 14.0 |
| CIFS-1G-3/4 | 1 x 3/4 | 1 | 3 | 4-5/16 | 2-13/16 | 13/16 | 1-7/8 | 1-1/2 | 2-7/8 | 2-5/16 | 1-9/16 | 14.0 |
| CIFS-1G-1 | 1 x 1 | 1 | 3 | 4-5/16 | 2-13/16 | 13/16 | 1-7/8 | 1-3/4 | 2-7/8 | 2-5/16 | 1-9/16 | 14.0 |
| CIFS-2G-1/2 | 1 x 1/2 | 2 | 3 | 4-3/8 | 4-11/16 | 7/8 | 1-7/8 | 1-1/4 | 2-7/8 | 4-1/4 | 1-5/8 | 26.0 |
| CIFS-2G-3/4 | 1 x 3/4 | 2 | 3 | 4-3/8 | 4-11/16 | 7/8 | 1-7/8 | 1-9/16 | 2-7/8 | 4-1/4 | 1-5/8 | 26.0 |
| CIFS-2G-1 | 1 x 1 | 2 | 3 | 4-3/8 | 4-11/16 | 7/8 | 1-7/8 | 1-3/4 | 2-7/8 | 4-1/4 | 1-5/8 | 26.0 |
| CIFS-3G-1/2 | 1 x 1/2 | 3 | 3 | 4-3/8 | 6-1/2 | 7/8 | 1-7/8 | 1-1/4 | 2-7/8 | 6-1/16 | 1-5/8 | 41.0 |
| CIFS-3G-3/4 | 1 x 3/4 | 3 | 3 | 4-3/8 | 6-1/2 | 7/8 | 1-7/8 | 1-9/16 | 2-7/8 | 6-1/16 | 1-5/8 | 41.0 |

# FS Boxes and Covers



CIFSC-1G



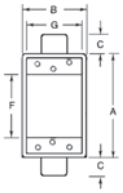



CIFSC-3G-3/4

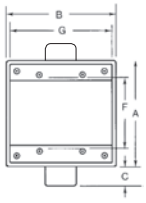

| Cat. No. | Hub Size (in.) | No. of Gangs | No. of Lugs | A (in.) | B (in.) | C (in.) | D (in.) | E (in.) | F (in.) | G (in.) | H (in.) | Cu (in.) |
|---|---|---|---|---|---|---|---|---|---|---|---|---|
| **FSC Boxes - 1-7/8 in. Deep** (Cast Aluminum) | | | | | | | | | | | | |
| CIFSC-1G-1/2 | 2 x 1/2 | 1 | 4 | 4-5/16 | 2-13/16 | 27/32 | 1-7/8 | 1-1/4 | 2-7/8 | 2-5/16 | 1-9/16 | 14.0 |
| CIFSC-1G-3/4 | 2 x 3/4 | 1 | 4 | 4-5/16 | 2-13/16 | 27/32 | 1-7/8 | 1-1/2 | 2-7/8 | 2-5/16 | 1-9/16 | 14.0 |
| CIFSC-1G-1 | 2 x 1 | 1 | 4 | 4-5/16 | 2-13/16 | 27/32 | 1-7/8 | 1-3/4 | 2-7/8 | 2-5/16 | 1-9/16 | 14.0 |
| CIFSC-2G-1/2 | 2 x 1/2 | 2 | 4 | 4-3/8 | 4-11/16 | 31/32 | 1-7/8 | 1-1/4 | 2-7/8 | 4-1/4 | 1-5/8 | 26.0 |
| CIFSC-2G-3/4 | 2 x 3/4 | 2 | 4 | 4-3/8 | 4-11/16 | 31/32 | 1-7/8 | 1-9/16 | 2-7/8 | 4-1/4 | 1-5/8 | 26.0 |
| CIFSC-2G-1 | 2 x 1 | 2 | 4 | 4-3/8 | 4-11/16 | 31/32 | 1-7/8 | 1-3/4 | 2-7/8 | 4-1/4 | 1-5/8 | 26.0 |
| CIFSC-3G-3/4 | 2 x 3/4 | 3 | 4 | 4-3/8 | 6-1/2 | 29/32 | 1-7/8 | 1-9/16 | 2-7/8 | 6-1/8 | 1-5/8 | 41.0 |



CIFSCC-1G



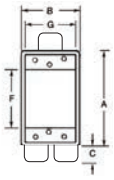

| Cat. No. | Hub Size (in.) | No. of Gangs | No. of Lugs | A (in.) | B (in.) | C (in.) | D (in.) | E (in.) | F (in.) | G (in.) | H (in.) | J (in.) | Cu (in.) |
|---|---|---|---|---|---|---|---|---|---|---|---|---|---|
| **FSCC Boxes - 1-7/8 in. Deep** (Cast Aluminum) | | | | | | | | | | | | | |
| CIFSCC-1G-1/2 | 3 x 1/2 | 1 | 3 | 4-5/16 | 2-13/16 | 27/32 | 1-7/8 | 1-1/4 | 2-7/8 | 2-5/16 | 1-9/16 | 1-9/16 | 14.0 |
| CIFSCC-1G-3/4 | 3 x 3/4 | 1 | 3 | 4-5/16 | 2-13/16 | 27/32 | 1-7/8 | 1-1/2 | 2-7/8 | 2-5/16 | 1-9/16 | 1-3/4 | 14.0 |



CIFS-1G-1/2-HV / CIFS-1G-3/4-HV



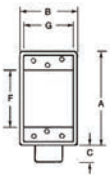

| Cat. No. | Hub Size (in.) | No. of Gangs | No. of Lugs | A (in.) | B (in.) | C (in.) | D (in.) | E (in.) | F (in.) | G (in.) | H (in.) | J (in.) | Cu (in.) |
|---|---|---|---|---|---|---|---|---|---|---|---|---|---|
| **347 Volt FS Box Kits - 1-7/8 in. Deep** (Cast Aluminum) | | | | | | | | | | | | | |
| CIFS-1G-1/2-HV* | 1 x 1/2 | 1 | 3 | 4-5/8 | 2-13/16 | 13/16 | 1-7/8 | 1-1/4 | 2-7/8 | 2-5/16 | 1-9/16 | – | 14.0 |
| CIFS-1G-3/4-HV* | 1 x 3/4 | 1 | 3 | 4-5/8 | 2-13/16 | 13/16 | 1-7/8 | 1-1/2 | 2-7/8 | 2-5/16 | 1-9/16 | – | 14.0 |

* For dry locations only
Includes stamped aluminum "CIFS-9HV" 347 V covers (not raintight)

# FS Boxes and Covers



CIFSF (1 face)



CIFST (2 faces)

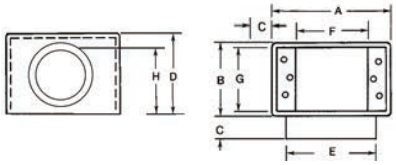


| Cat. No. | Hub Size (in.) | No. of Gangs | No. of Lugs | A (in.) | B (in.) | C (in.) | D (in.) | E (in.) | F (in.) | G (in.) | H (in.) | J (in.) | Cu (in.) |
|---|---|---|---|---|---|---|---|---|---|---|---|---|---|
| **FSF Box - 3 in. Deep** (Cast Aluminum) | | | | | | | | | | | | | |
| CIFSF | 2 | – | – | 4-5/16 | 2-3/4 | 31/32 | 2-7/8 | 2-7/8 | 2-13/16 | 2-13/32 | 1-15/32 | – | 30.5 |
| **FST Box - 3-5/8 in. Deep** (Cast Aluminum) | | | | | | | | | | | | | |
| CIFST | 2 | – | – | 4-5/16 | 2-3/4 | 1-3/8 | 3-3/8 | 3 | 2-7/8 | 2-5/16 | 2-13/16 | – | 38.7 |



CIFSU

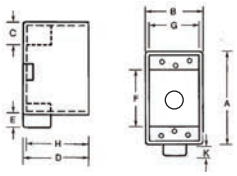


| Cat. No. | Hub Size (in.) | | No. of Lugs | A (in.) | B (in.) | C (in.) | D (in.) | E (in.) | F (in.) | G (in.) | H (in.) | K (in.) | Cu (in.) |
|---|---|---|---|---|---|---|---|---|---|---|---|---|---|
| **Universal FSU Boxes - 2-3/8 in. Deep** (Cast Aluminum) | | | | | | | | | | | | | |
| | End | Bottom | | | | | | | | | | | |
| CIFSU-1/2 | 2 x 1/2 | 1/2 | 2 | 4-5/16 | 2-3/4 | 13/16 | 2-3/8 | 1-1/8 | 2-13/16 | 2-1/2 | 1-29/32 | 7/16 | 18.5 |
| CIFSU-3/4 | 2 x 3/4 | 3/4 | 2 | 4-5/16 | 2-3/4 | 13/16 | 2-3/8 | 1-1/8 | 2-13/16 | 2-1/2 | 2 | 7/16 | 18.5 |

Supplied with close up plugs



FG-09080

| Cat. No. | Description |
|---|---|
| **Mounting Lugs for CI-FSU** | |
| FG-09080 | Mounting lugs for a 3-Hole universal FSU box, 2-3/8 in. deep |

# FS Boxes and Covers

## Single Gang


CCD-FS

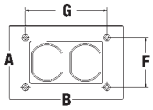



CFSH-G

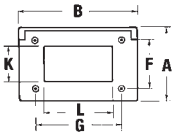



CWPDR

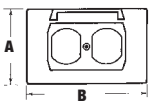



CWPDR-FS

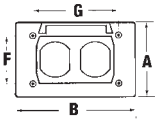


| Cat. No. | Description | A (in.) | B (in.) | F (in.) | G (in.) | K (in.) | L (in.) |
|---|---|---|---|---|---|---|---|
| **Single Gang Horizontal Covers** (Cast Aluminum) | | | | | | | |
| CCD-FS | Silver – box mount (zinc) | 2-13/16 | 4-9/16 | 1-7/8 | 3-1/4 | – | – |
| CFSH-G | One GFCI receptacle – box mount | 2-13/16 | 4-9/16 | 1-7/8 | 3-1/4 | 1-11/32 | 2-21/32 |
| CWPDR | One duplex receptacle – device mount | 2-13/16 | 4-9/16 | – | – | – | – |
| CWPDR-FS | One duplex receptacle – box mount | 2-13/16 | 4-9/16 | 1-7/8 | 3-1/4 | – | – |


CFSDR

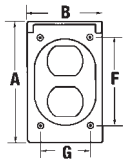



CFSR-G

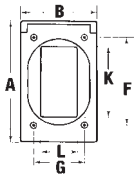



CWPV-G

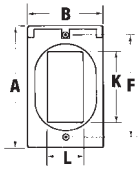


| Cat. No. | Description | A (in.) | B (in.) | F (in.) | G (in.) | K (in.) | L (in.) |
|---|---|---|---|---|---|---|---|
| **Single Gang Vertical Covers** (Cast Aluminum) | | | | | | | |
| CFSDR | One duplex receptacle – box mount | 4-9/16 | 2-13/16 | 3-1/4 | 1-7/8 | – | – |
| CFSR-G | One GFCI receptacle – box mount | 4-9/16 | 2-13/16 | 3-1/4 | | 2-21/32 | 1-11/32 |
| CWPV-G | One GFCI receptacle – device mount | 4-9/16 | 2-13/16 | 3-1/4 | – | 2-21/32 | 1-11/32 |


CFST

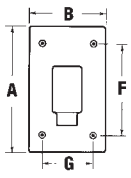



CFSTF

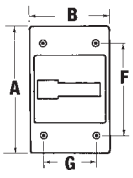


| Cat. No. | Description | A (in.) | B (in.) | F (in.) | G (in.) |
|---|---|---|---|---|---|
| **Single Gang Switch Covers** (Cast Aluminum) | | | | | |
| CFST | One plunger – box mount | 4-9/16 | 2-13/16 | 3-1/4 | 1-7/8 |
| CFSTF | One lever switch – box mount | 4-9/16 | 2-13/16 | 3-1/4 | 1-7/8 |

# FS Boxes and Covers

## Single Gang


CCB

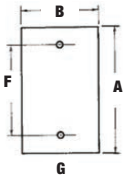



CCB-FS


CFSB

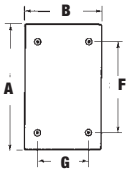



CIFS-100G

| Nº de catalogue | Description | A (in.) | B (in.) | F (in.) | G (in.) |
|---|---|---|---|---|---|
| **Single Gang Blank Covers** (Cast Aluminum) | | | | | |
| CCB | Silver – device mount (stamped aluminum) | 4-9/16 | 2-13/16 | 3-9/32 | – |
| CCB-FS | Silver – box mount (stamped aluminum) | 4-9/16 | 2-13/16 | 3-1/4 | 1-7/8 |
| CFSB | Blank – box mount | 4-9/16 | 2-13/16 | 3-1/4 | 1-7/8 |
| CIFS-100G | Blank – box mount (gasket glued on cover) | 4-3/8 | 2-14/16 | 3-1/4 | 1-7/8 |

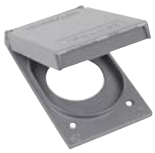
CFSR Series

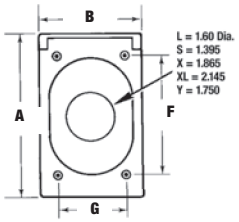


| Cat. No. | Description | Nominal Size (in.) | Max. Device Face Dia. | A (in.) | B (in.) | F (in.) | G (in.) |
|---|---|---|---|---|---|---|---|
| **Single Gang Vertical Covers** (Cast Aluminum) | | | | | | | |
| CFSR-L | Single receptacle – box mount | 1-9/16 | 1.600 | 4-9/16 | 2-13/16 | 3-1/4 | 1-7/8 |
| CFSR-S | Single receptacle – box mount | 1-3/8 | 1.395 | 4-9/16 | 2-13/16 | 3-1/4 | 1-7/8 |
| CFSR-X | Single receptacle – box mount | 1-27/32 | 1.865 | 4-9/16 | 2-13/16 | 3-1/4 | 1-7/8 |
| CFSR-XL | Single receptacle – box mount | 2-1/8 | 2.145 | 4-9/16 | 2-13/16 | 3-1/4 | 1-7/8 |
| CFSR-Y | Single receptacle – box mount | 1-3/4 | 1.750 | 4-9/16 | 2-13/16 | 3-1/4 | 1-7/8 |


FS-GKV

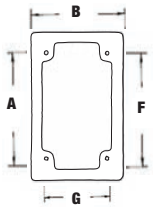


| Cat. No. | Description | A (in.) | B (in.) | F (in.) | G (in.) |
|---|---|---|---|---|---|
| **Single Gang Gasket** | | | | | |
| FS-GKV* | Single Gang – box mount – gasket | 4-9/16 | 2-13/16 | 3-1/4 | 1-7/8 |

* CSA not applicable

# FS Boxes and Covers

## Two Gang


2CWPDR

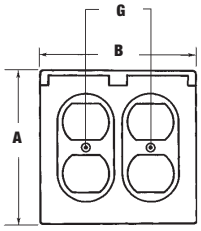



2CWPR-M

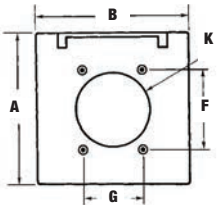



2CFSR-M

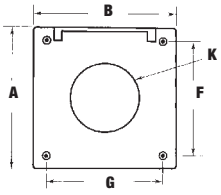



2CFST

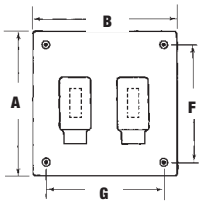



2CCB

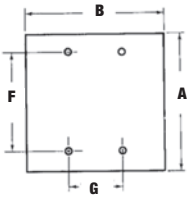



2CFSB

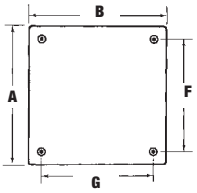


| Cat. No. | Description | A (in.) | B (in.) | F (in.) | G (in.) | K (in.) |
|---|---|---|---|---|---|---|
| **Two Gang** (Cast Aluminum) | | | | | | |
| 2CWPDR | Two duplex receptacles – device mount | 4-9/16 | 4-5/8 | – | 1-13/16 | – |
| 2CWPR-M | Single receptacle – hole – device mount | 4-9/16 | 4-5/8 | 2-3/8 | 1-13/16 | 2-1/4 |
| 2CFSR-M | Single receptacle – hole – box mount | 4-9/16 | 4-5/8 | 3-3/4 | 3-3/4 | 2-1/4 |
| 2CFST | Plunger style cover | 4-9/16 | 4-5/8 | 3-3/4 | 3-3/4 | – |
| 2CCB | Silver – device mount (stamped aluminum) | 4-9/16 | 4-5/8 | 3-9/32 | 1-13/16 | – |
| 2CFSB | Blank cover – box mount | 4-9/16 | 4-5/8 | 3-3/4 | 3-3/4 | – |

# FS Boxes and Covers

## Dry-Tite® FS Covers Two Gang


CIFS-42

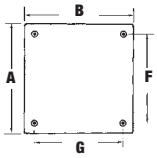



CIFS-62

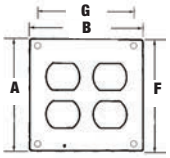



CIFS-69

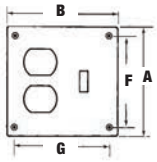



CIFS-92

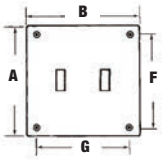


| Cat. No. | Description | A (in.) | B (in.) | F (in.) | G (in.) |
|---|---|---|---|---|---|
| **Two gang FS Covers*** (Stamped Aluminum) | | | | | |
| CIFS-42* | Blank – two gang – box mount | 4-5/8 | 4-9/16 | 3-1/4 | 3-11/16 |
| CIFS-62* | Two duplex receptacles – box mount | 4-5/8 | 4-9/16 | 3-1/4 | 3-11/16 |
| CIFS-69* | One duplex receptacles, one toggle switch – box mount | 4-5/8 | 4-9/16 | 3-1/4 | 3-11/16 |
| CIFS-92* | Two toggle switches – box mount | 4-5/8 | 4-9/16 | 3-1/4 | 3-11/16 |

* CIFS covers are CSA approved only


2CDR

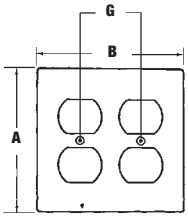



2CTS

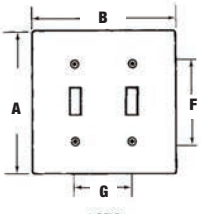



2CTDR

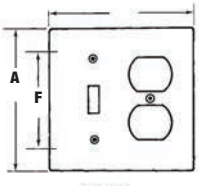


| Cat. No. | Description | A (in.) | B (in.) | F (in.) | G (in.) |
|---|---|---|---|---|---|
| **Two Gang** (Cast Aluminum) | | | | | |
| 2CDR | Two duplex receptacles – device mount | 4-9/16 | 4-5/8 | – | 1-13/16 |
| 2CTS | Two switch – device mount | 4-9/16 | 4-5/8 | 2-3/8 | 1-13/16 |
| 2CTDR | One switch and one duplex receptacle – device mount | 4-9/16 | 4-5/8 | 2-3/8 | – |

Dry-Tite® covers are approved for dry locations only

# FS Boxes and Covers

## Dry-Tite® FS Covers Single Gang


CDR

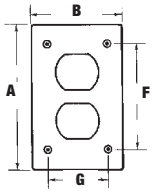



CTS

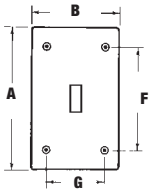


| Cat. No. | Description | A (in.) | B (in.) | F (in.) | G (in.) |
|---|---|---|---|---|---|
| **Single Gang** (Cast Aluminum) | | | | | |
| CDR | One duplex receptacle – box mount | 4-9/16 | 2-13/16 | 3-1/4 | 1-7/8 |
| CTS | One switch receptacle – box mount | 4-9/16 | 2-13/16 | 3-1/4 | 1-7/8 |


CIFS-4

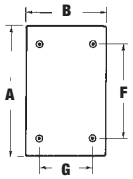



CIFS-7 / CIFS-5

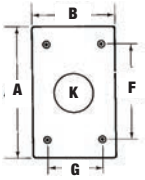



CIFS-6

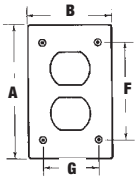



CIFS-9


CIFS-9-HV

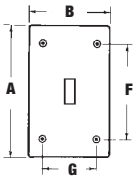


| Cat. No. | Description | A (in.) | B (in.) | F (in.) | G (in.) | K (in.) |
|---|---|---|---|---|---|---|
| **Single Gang FS Covers** (Stamped Aluminum) | | | | | | |
| CIFS-4 | Blank – single gang – box mount | 4-9/16 | 2-13/16 | 3-1/4 | 1-7/8 | – |
| CIFS-5 | 15 A single receptacle – box mount | 4-9/16 | 2-13/16 | 3-1/4 | 1-7/8 | 1-13/16 |
| CIFS-6 | One duplex receptacle – box mount | 4-9/16 | 2-13/16 | 3-1/4 | 1-7/8 | – |
| CIFS-7 | 20 A single locking receptacle – box mount | 4-9/16 | 2-13/16 | 3-1/4 | 1-7/8 | 1-19/32 |
| CIFS-9 | One toggle switch – box mount | 4-9/16 | 2-13/16 | 3-1/4 | 1-7/8 | – |
| CIFS-9-HV | One toggle switch (347 V) – box mount | 4-9/16 | 2-13/16 | 3-1/4 | 1-7/8 | – |


CRL

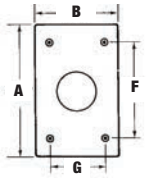


| Cat. No. | Description | Nominal Size (in.) | Max. Device Face Dia. | A (in.) | B (in.) | F (in.) | G (in.) |
|---|---|---|---|---|---|---|---|
| **Single Gang** (Cast Aluminum) | | | | | | | |
| CRL | Single receptacle – box mount | 1-9/16 | 1.600 | 4-9/16 | 2-13/16 | 3-1/4 | 1-7/8 |
| CRS | Single receptacle – box mount | 1-3/8 | 1.395 | 4-9/16 | 2-13/16 | 3-1/4 | 1-7/8 |

Dry-Tite® covers are approved for dry locations only

# FS Boxes and Covers

## Single Gang

All sizes take standard covers and accessories or devices. Integral mounting feet provide easy mounting. Grounding lugs included.

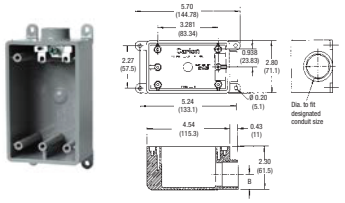

Type FSE

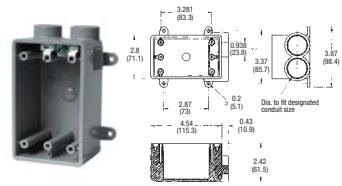

Type FSS

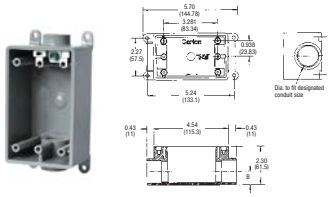

Type FSC

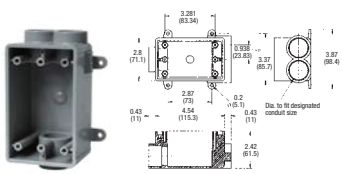

Type FSCC



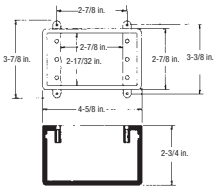

Type FD



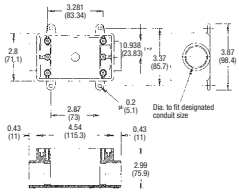

Type FDC



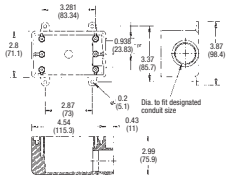

Type FDE

| Cat. No. | Description | Size (in.) | Volume Cu. In. | Std. Ctn. Qty. |
|---|---|---|---|---|
| **Type FSE** | | | | |
| C980DFN-CTN | For dead-end terminations. | 1/2 | 18 | 12 |
| C980EFN-CTN | | 3/4 | 18 | 12 |
| C980FFN-CTN | | 1 | 18 | 8 |
| **Type FSS** | | | | |
| C982DFN-CTN | For multiple dead-end circuit terminations or where additional support is required in stub-up applications. | 1/2 | 18 | 12 |
| C982EFN-CTN | | 3/4 | 18 | 12 |
| C982FFN-CTN | | 1 | 18 | 8 |
| **Type FSC** | | | | |
| C981DFN-CTN | For through terminations. | 1/2 | 18 | 12 |
| C981EFN-CTN | | 3/4 | 18 | 12 |
| C981FFN-CTN | | 1 | 18 | 8 |
| **Type FSCC** | | | | |
| C979DFN | For multiple through circuit termintions or where additional support is required in stub-up applications. | 1/2 | 18 | 15 |
| C979EFN | | 3/4 | 18 | 15 |
| C979FFN | | 1 | 18 | 15 |

| Cat. No. | Description | Size (in.) | Volume Cu. In. | Std. Ctn. Qty. |
|---|---|---|---|---|
| **Type FD** | | | | |
| C981DFN-CTN | For terminations where hub requirements vary according to application – hubs easily made with flared wood bit or hole saw. | – | 25 | 10 |
| **Type FDC** | | | | |
| C9811EN | For through terminations where large devices or additional wiring capacity is required. | 3/4 | 25 | 10 |
| C9811FN | | 1 | 25 | 10 |
| **Type FDE** | | | | |
| C9801DN | For dead-end terminations where large devices or additional wiring capacity is required. | 1/2 | 25 | 10 |
| C9801EN | | 3/4 | 25 | 10 |
| C9801FN | | 1 | 25 | 10 |

# FS Boxes and Covers

## Single Gang


E98SRCN-CAR


E98G20N


E98G30N-CAR


E98G5FN-CAR

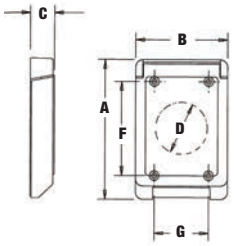


| Cat. No. | Description | Colour | A (in.) | B (in.) | C (in.) | D (in.) | F (in.) | G (in.) |
|---|---|---|---|---|---|---|---|---|
| **Single Gang Vertical Covers** (Nonmetallic) | | | | | | | | |
| E98SRCN-CAR | For 15 A or other single receptacles under 1.375 dia. | Grey | 4-53/64 | 3-11/16 | 53/64 | 1-25/64 ± 1/16 | 3-1/4 | 1-57/64 |
| E98G20N | For 20 A or other single receptacles under 1.625 dia. | Grey | 4-53/64 | 3-11/16 | 53/64 | 1-41/64 ± 1-23/32 | 3-1/4 | 1-57/64 |
| E98G30N-CAR | For 30 A or other single receptacles under 1.750 dia. | Grey | 4-53/64 | 3-11/16 | 53/64 | 1-49/64 ± 1-23/32 | 3-1/4 | 1-57/64 |
| E98G5FN-CAR | For 50 A or other single receptacles under 2.250 dia. | Grey | 4-53/64 | 3-11/16 | 53/64 | 2-1/4 ± 1/16 | 3-1/4 | 1-57/64 |


E98GCBN


E98SSCN-CAR


E98GDRN-CAR


E98GFCN-CAR

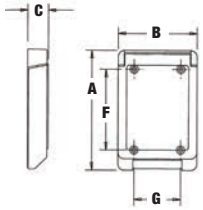


| Cat. No. | Description | Colour | A (in.) | B (in.) | C (in.) | F (in.) | G (in.) |
|---|---|---|---|---|---|---|---|
| **Single Gang Vertical Covers** (Nonmetallic) | | | | | | | |
| E98SSCN-CAR | Single switch | Grey | 4-53/64 | 3-11/16 | 53/64 | 3-1/4 | 1-57/64 |
| E98GDRN-CAR | Duplex receptacle | Grey | 4-53/64 | 3-11/16 | 53/64 | 3-1/4 | 1-57/64 |
| E98GFCN-CAR | GFCI receptacle – device opening dimensions: 2-5/8 H x 1-5/16 W | Grey | 4-53/64 | 3-11/16 | 53/64 | 3-1/4 | 1-57/64 |


E98TSCN

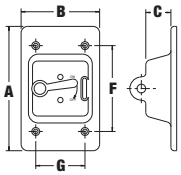



E980CN-CAR

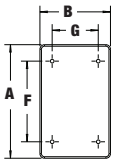


| Cat. No. | Description | Colour | A (in.) | B (in.) | C (in.) | F (in.) | G (in.) |
|---|---|---|---|---|---|---|---|
| **Single Gang Vertical Covers** (Nonmetallic) | | | | | | | |
| E98TSCN | Toggle switch | Grey | 4-3/4 | 3 | 31/32 | 3-9/32 | 1-57/64 |
| E980CN-CAR | Supplied with stainless steel mounting screws and gasket | Grey | 4-5/8 | 2-7/8 | – | 3-9/32 | 1-57/64 |
| E980CM-CAR | Supplied with stainless steel mounting screws and gasket | White | 4-5/8 | 2-7/8 | – | 3-9/32 | 1-57/64 |


E98DHGN-CAR


E98GHGN-CAR

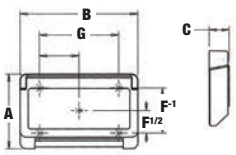


| Cat. No. | Description | Colour | A (in.) | B (in.) | C (in.) | F1 (in.) | F1/2 (in.) | G (in.) |
|---|---|---|---|---|---|---|---|---|
| **Single Gang Horizontal Covers** (Nonmetallic) | | | | | | | | |
| E98DHGN-CAR | Duplex receptacle | Grey | 3-1/8 | 4-7/8 | 13/16 | 1-57/64 | 61/64 | 3-9/32 |
| E98GHGN-CAR | GFCI horizontal | Grey | 3-1/8 | 4-7/8 | 13/16 | 1-57/64 | 61/64 | 3-9/32 |

# FS Boxes and Covers

## Two Gang

All sizes take standard covers and accessories or devices. Integral mounting feet provide easy mounting. Grounding screws are included.

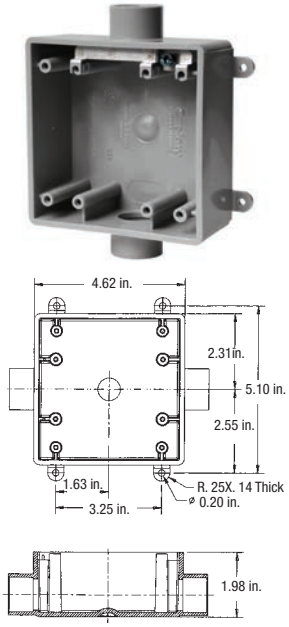


Type 2FSC

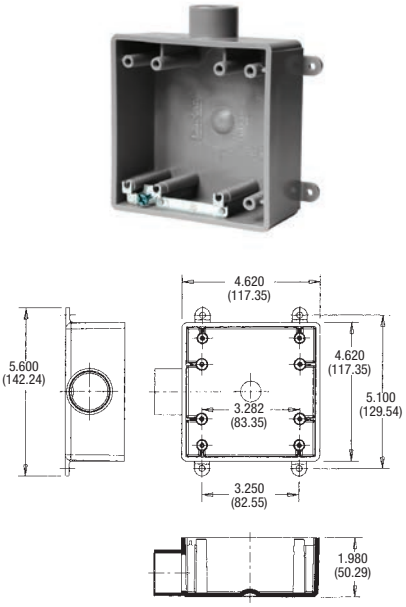


Type 2FSE

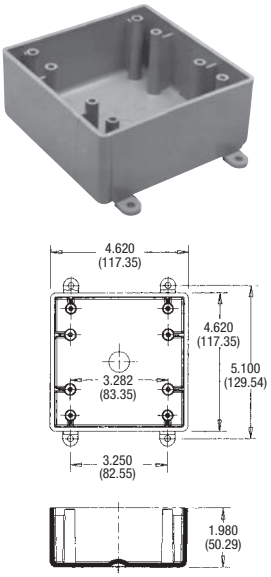


Type FS

| Cat. No. | Description | Size (in.) | Volume Cu. In. | Std. Ctn. Qty. |
|---|---|---|---|---|
| **Type 2FSC** | | | | |
| CE9812DR | For through terminations where two devices or additional wiring capacity is required. | 1/2 | 32 | 4 |
| CE9812E-CTN | | 3/4 | 32 | 10 |
| CE9812FR | | 1 | 32 | 10 |
| **Type 2FSE** | | | | |
| CE9802D-CTN | For dead-end terminations where two devices or additional wiring capacity is required. | 1/2 | 18 | 10 |
| CE9802E-CTN | | 3/4 | 18 | 10 |
| CE9802FR | | 1 | 18 | 1 |
| **Type FS** | | | | |
| CE9802 | For terminations where hub requirements vary according to application - hubs easily made with flared wood bit or hole saw. | N/A | 32 | 10 |

# FS Boxes and Covers

## Two Gang



E9G2DDN-CAR

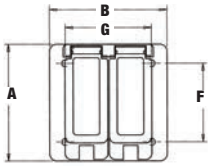




E9G2SSN

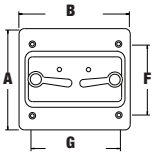




E9G2DSN-CAR



E9G2GTN-CAR

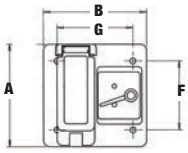


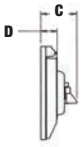




E9802CN-CAR

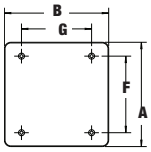


| Cat. No. | Description | Colour | A (in.) | B (in.) | C (in.) | D (in.) | F (in.) | G (in.) |
|---|---|---|---|---|---|---|---|---|
| **Two Gang Covers** (Nonmetallic) | | | | | | | | |
| E9G2DDN-CAR | Double duplex | Grey | 4-27/34 | 4-27/34 | – | – | 3-17/64 | 3-9/16 |
| E9G2SSN | Double toggle | Grey | 4-55/64 | 3-17/64 | – | – | 3-17/64 | 3-9/16 |
| E9802CN-CAR | Supplied with stainless steel mounting screws and gasket | Grey | 4-55/64 | 4-55/64 | – | – | 3-17/64 | 3-9/16 |
| E9G2GTN-CAR | Combination toggle / GFCI | Grey | 4-55/64 | 3-17/64 | 1-53/64 | 55/64 | 3-17/64 | 3-9/16 |
| E9G2DSN-CAR | Combination toggle / duplex receptacle | Grey | 4-55/64 | 3-17/64 | 1-53/64 | 55/64 | 3-17/64 | 3-9/16 |

# FS Boxes and Covers











## Applications :

- FS boxes are CSA approved for wet locations
- FS device boxes are installed in applications that require a rugged unit to accept wiring devices, switches, electronic components and terminal blocks
- FS device boxes provide spacious accessible wiring chambers that are a convenient location to maintain or change a system; pull conductors; make splices or branch conduits
- FS device boxes, when used with an appropriate cover, provide a raintight installation
- Both weatherproof and dry location covers are available

## Features/Benefits :

- FS device boxes are sand casted or die casted using copper free (less than 0.004 copper content) aluminum alloys.
- FS device boxes incorporate external hub design that provides maximum wiring capacity
- FS device boxes have precision molded NPT threaded hubs allowing trouble-free field installation of rigid conduit
- FS device boxes are available in 1-7/8 in. and 2-5/8 in. depth
- Carlon® nonmetallic weatherproof FS covers are UV resistant, flame retardant and non-corrosive

## Standard Materials :

- CIFS and CIFD device boxes: sand cast, copper free aluminum (less than 0.004 copper content)
- CIFSU: die cast, copper free aluminum (less than 0.004 copper content)
- FS covers: die cast aluminum, sand cast aluminum or nonmetallic

## Compliances :

Compliances as noted on each page of the catalogue include:

- CSA Certified
- UL Listed

# FS Boxes and Covers



CIFDC-1/2

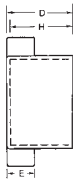


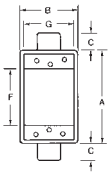


| Cat. No. | Hub Size | No. of Gangs | No. of Lugs | A (in.) | B (in.) | C (in.) | D (in.) | E (in.) | F (in.) | G (in.) | H (in.) | Cu (in.) |
|---|---|---|---|---|---|---|---|---|---|---|---|---|
| **FDC Boxes - 2-5/8 in. Deep** (Cast Aluminum) | | | | | | | | | | | | |
| CIFDC-1/2 | 2 x 1/2 | 1 | 2 | 4-5/16 | 2-13/16 | 15/16 | 2-5/8 | 1-3/8 | 2-7/8 | 2-3/8 | 2-5/32 | 22.5 |
| CIFDC-3/4 | 2 x 3/4 | 1 | 2 | 4-5/16 | 2-13/16 | 15/16 | 2-5/8 | 1-3/8 | 2-7/8 | 2-3/8 | 2-13/32 | 22.5 |
| CIFDC-1 | 2 x 1 | 1 | 2 | 4-5/16 | 2-13/16 | 1-3/8 | 2-5/8 | 1-5/8 | 2-7/8 | 2-3/8 | 2-13/32 | 22.5 |



CIFS-1G




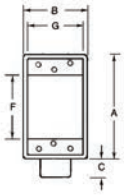




CIFS-2G

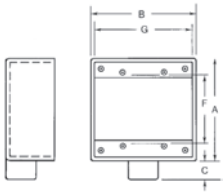




CIFS-3G

| Cat. No. | Hub Size | No. of Gangs | No. of Lugs | A (in.) | B (in.) | C (in.) | D (in.) | E (in.) | F (in.) | G (in.) | H (in.) | Cu (in.) |
|---|---|---|---|---|---|---|---|---|---|---|---|---|
| **FS Boxes - 1-7/8 in. Deep** (Cast Aluminum) | | | | | | | | | | | | |
| CIFS-1G-1/2 | 1 x 1/2 | 1 | 3 | 4-5/16 | 2-13/16 | 13/16 | 1-7/8 | 1-1/4 | 2-7/8 | 2-5/16 | 1-9/16 | 14.0 |
| CIFS-1G-3/4 | 1 x 3/4 | 1 | 3 | 4-5/16 | 2-13/16 | 13/16 | 1-7/8 | 1-1/2 | 2-7/8 | 2-5/16 | 1-9/16 | 14.0 |
| CIFS-1G-1 | 1 x 1 | 1 | 3 | 4-5/16 | 2-13/16 | 13/16 | 1-7/8 | 1-3/4 | 2-7/8 | 2-5/16 | 1-9/16 | 14.0 |
| CIFS-2G-1/2 | 1 x 1/2 | 2 | 3 | 4-3/8 | 4-11/16 | 7/8 | 1-7/8 | 1-1/4 | 2-7/8 | 4-1/4 | 1-5/8 | 26.0 |
| CIFS-2G-3/4 | 1 x 3/4 | 2 | 3 | 4-3/8 | 4-11/16 | 7/8 | 1-7/8 | 1-9/16 | 2-7/8 | 4-1/4 | 1-5/8 | 26.0 |
| CIFS-2G-1 | 1 x 1 | 2 | 3 | 4-3/8 | 4-11/16 | 7/8 | 1-7/8 | 1-3/4 | 2-7/8 | 4-1/4 | 1-5/8 | 26.0 |
| CIFS-3G-1/2 | 1 x 1/2 | 3 | 3 | 4-3/8 | 6-1/2 | 7/8 | 1-7/8 | 1-1/4 | 2-7/8 | 6-1/16 | 1-5/8 | 41.0 |
| CIFS-3G-3/4 | 1 x 3/4 | 3 | 3 | 4-3/8 | 6-1/2 | 7/8 | 1-7/8 | 1-9/16 | 2-7/8 | 6-1/16 | 1-5/8 | 41.0 |

# FS Boxes and Covers



CIFSC-1G



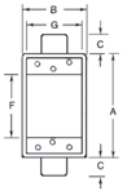



CIFSC-3G-3/4

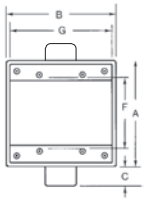

| Cat. No. | Hub Size (in.) | No. of Gangs | No. of Lugs | A (in.) | B (in.) | C (in.) | D (in.) | E (in.) | F (in.) | G (in.) | H (in.) | Cu (in.) |
|---|---|---|---|---|---|---|---|---|---|---|---|---|
| **FSC Boxes - 1-7/8 in. Deep** (Cast Aluminum) | | | | | | | | | | | | |
| CIFSC-1G-1/2 | 2 x 1/2 | 1 | 4 | 4-5/16 | 2-13/16 | 27/32 | 1-7/8 | 1-1/4 | 2-7/8 | 2-5/16 | 1-9/16 | 14.0 |
| CIFSC-1G-3/4 | 2 x 3/4 | 1 | 4 | 4-5/16 | 2-13/16 | 27/32 | 1-7/8 | 1-1/2 | 2-7/8 | 2-5/16 | 1-9/16 | 14.0 |
| CIFSC-1G-1 | 2 x 1 | 1 | 4 | 4-5/16 | 2-13/16 | 27/32 | 1-7/8 | 1-3/4 | 2-7/8 | 2-5/16 | 1-9/16 | 14.0 |
| CIFSC-2G-1/2 | 2 x 1/2 | 2 | 4 | 4-3/8 | 4-11/16 | 31/32 | 1-7/8 | 1-1/4 | 2-7/8 | 4-1/4 | 1-5/8 | 26.0 |
| CIFSC-2G-3/4 | 2 x 3/4 | 2 | 4 | 4-3/8 | 4-11/16 | 31/32 | 1-7/8 | 1-9/16 | 2-7/8 | 4-1/4 | 1-5/8 | 26.0 |
| CIFSC-2G-1 | 2 x 1 | 2 | 4 | 4-3/8 | 4-11/16 | 31/32 | 1-7/8 | 1-3/4 | 2-7/8 | 4-1/4 | 1-5/8 | 26.0 |
| CIFSC-3G-3/4 | 2 x 3/4 | 3 | 4 | 4-3/8 | 6-1/2 | 29/32 | 1-7/8 | 1-9/16 | 2-7/8 | 6-1/8 | 1-5/8 | 41.0 |



CIFSCC-1G



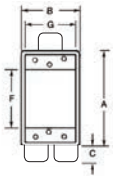

| Cat. No. | Hub Size (in.) | No. of Gangs | No. of Lugs | A (in.) | B (in.) | C (in.) | D (in.) | E (in.) | F (in.) | G (in.) | H (in.) | J (in.) | Cu (in.) |
|---|---|---|---|---|---|---|---|---|---|---|---|---|---|
| **FSCC Boxes - 1-7/8 in. Deep** (Cast Aluminum) | | | | | | | | | | | | | |
| CIFSCC-1G-1/2 | 3 x 1/2 | 1 | 3 | 4-5/16 | 2-13/16 | 27/32 | 1-7/8 | 1-1/4 | 2-7/8 | 2-5/16 | 1-9/16 | 1-9/16 | 14.0 |
| CIFSCC-1G-3/4 | 3 x 3/4 | 1 | 3 | 4-5/16 | 2-13/16 | 27/32 | 1-7/8 | 1-1/2 | 2-7/8 | 2-5/16 | 1-9/16 | 1-3/4 | 14.0 |



CIFS-1G-1/2-HV / CIFS-1G-3/4-HV



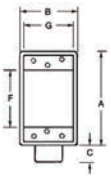

| Cat. No. | Hub Size (in.) | No. of Gangs | No. of Lugs | A (in.) | B (in.) | C (in.) | D (in.) | E (in.) | F (in.) | G (in.) | H (in.) | J (in.) | Cu (in.) |
|---|---|---|---|---|---|---|---|---|---|---|---|---|---|
| **347 Volt FS Box Kits - 1-7/8 in. Deep** (Cast Aluminum) | | | | | | | | | | | | | |
| CIFS-1G-1/2-HV* | 1 x 1/2 | 1 | 3 | 4-5/8 | 2-13/16 | 13/16 | 1-7/8 | 1-1/4 | 2-7/8 | 2-5/16 | 1-9/16 | – | 14.0 |
| CIFS-1G-3/4-HV* | 1 x 3/4 | 1 | 3 | 4-5/8 | 2-13/16 | 13/16 | 1-7/8 | 1-1/2 | 2-7/8 | 2-5/16 | 1-9/16 | – | 14.0 |

* For dry locations only
Includes stamped aluminum "CIFS-9HV" 347 V covers (not raintight)

# FS Boxes and Covers



CIFSF (1 face)



CIFST (2 faces)

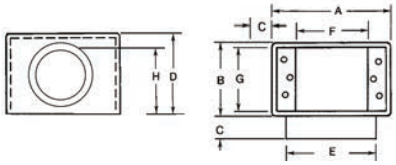


| Cat. No. | Hub Size (in.) | No. of Gangs | No. of Lugs | A (in.) | B (in.) | C (in.) | D (in.) | E (in.) | F (in.) | G (in.) | H (in.) | J (in.) | Cu (in.) |
|---|---|---|---|---|---|---|---|---|---|---|---|---|---|
| **FSF Box - 3 in. Deep** (Cast Aluminum) | | | | | | | | | | | | | |
| CIFSF | 2 | – | – | 4-5/16 | 2-3/4 | 31/32 | 2-7/8 | 2-7/8 | 2-13/16 | 2-13/32 | 1-15/32 | – | 30.5 |
| **FST Box - 3-5/8 in. Deep** (Cast Aluminum) | | | | | | | | | | | | | |
| CIFST | 2 | – | – | 4-5/16 | 2-3/4 | 1-3/8 | 3-3/8 | 3 | 2-7/8 | 2-5/16 | 2-13/16 | – | 38.7 |



CIFSU

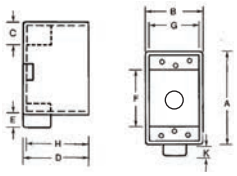


| Cat. No. | Hub Size (in.) | | No. of Lugs | A (in.) | B (in.) | C (in.) | D (in.) | E (in.) | F (in.) | G (in.) | H (in.) | K (in.) | Cu (in.) |
|---|---|---|---|---|---|---|---|---|---|---|---|---|---|
| **Universal FSU Boxes - 2-3/8 in. Deep** (Cast Aluminum) | | | | | | | | | | | | | |
| | End | Bottom | | | | | | | | | | | |
| CIFSU-1/2 | 2 x 1/2 | 1/2 | 2 | 4-5/16 | 2-3/4 | 13/16 | 2-3/8 | 1-1/8 | 2-13/16 | 2-1/2 | 1-29/32 | 7/16 | 18.5 |
| CIFSU-3/4 | 2 x 3/4 | 3/4 | 2 | 4-5/16 | 2-3/4 | 13/16 | 2-3/8 | 1-1/8 | 2-13/16 | 2-1/2 | 2 | 7/16 | 18.5 |

Supplied with close up plugs



FG-09080

| Cat. No. | Description |
|---|---|
| **Mounting Lugs for CI-FSU** | |
| FG-09080 | Mounting lugs for a 3-Hole universal FSU box, 2-3/8 in. deep |

# FS Boxes and Covers

## Single Gang


CCD-FS

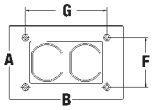



CFSH-G

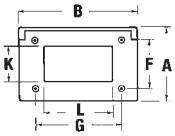



CWPDR

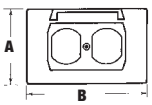



CWPDR-FS

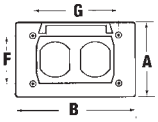


| Cat. No. | Description | A (in.) | B (in.) | F (in.) | G (in.) | K (in.) | L (in.) |
|---|---|---|---|---|---|---|---|
| **Single Gang Horizontal Covers** (Cast Aluminum) | | | | | | | |
| CCD-FS | Silver – box mount (zinc) | 2-13/16 | 4-9/16 | 1-7/8 | 3-1/4 | – | – |
| CFSH-G | One GFCI receptacle – box mount | 2-13/16 | 4-9/16 | 1-7/8 | 3-1/4 | 1-11/32 | 2-21/32 |
| CWPDR | One duplex receptacle – device mount | 2-13/16 | 4-9/16 | – | – | – | – |
| CWPDR-FS | One duplex receptacle – box mount | 2-13/16 | 4-9/16 | 1-7/8 | 3-1/4 | – | – |


CFSDR

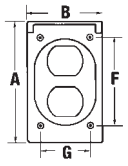



CFSR-G

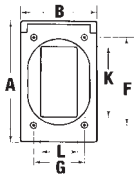



CWPV-G

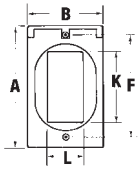


| Cat. No. | Description | A (in.) | B (in.) | F (in.) | G (in.) | K (in.) | L (in.) |
|---|---|---|---|---|---|---|---|
| **Single Gang Vertical Covers** (Cast Aluminum) | | | | | | | |
| CFSDR | One duplex receptacle – box mount | 4-9/16 | 2-13/16 | 3-1/4 | 1-7/8 | – | – |
| CFSR-G | One GFCI receptacle – box mount | 4-9/16 | 2-13/16 | 3-1/4 | | 2-21/32 | 1-11/32 |
| CWPV-G | One GFCI receptacle – device mount | 4-9/16 | 2-13/16 | 3-1/4 | – | 2-21/32 | 1-11/32 |


CFST

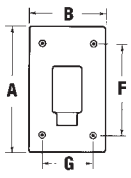



CFSTF

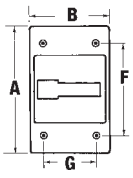


| Cat. No. | Description | A (in.) | B (in.) | F (in.) | G (in.) |
|---|---|---|---|---|---|
| **Single Gang Switch Covers** (Cast Aluminum) | | | | | |
| CFST | One plunger – box mount | 4-9/16 | 2-13/16 | 3-1/4 | 1-7/8 |
| CFSTF | One lever switch – box mount | 4-9/16 | 2-13/16 | 3-1/4 | 1-7/8 |

# FS Boxes and Covers

## Single Gang


CCB

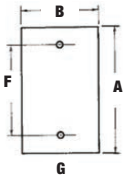



CCB-FS


CFSB

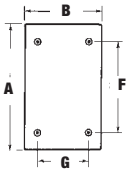



CIFS-100G

| Nº de catalogue | Description | A (in.) | B (in.) | F (in.) | G (in.) |
|---|---|---|---|---|---|
| **Single Gang Blank Covers** (Cast Aluminum) | | | | | |
| CCB | Silver – device mount (stamped aluminum) | 4-9/16 | 2-13/16 | 3-9/32 | – |
| CCB-FS | Silver – box mount (stamped aluminum) | 4-9/16 | 2-13/16 | 3-1/4 | 1-7/8 |
| CFSB | Blank – box mount | 4-9/16 | 2-13/16 | 3-1/4 | 1-7/8 |
| CIFS-100G | Blank – box mount (gasket glued on cover) | 4-3/8 | 2-14/16 | 3-1/4 | 1-7/8 |

3.4

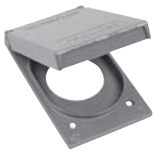
CFSR Series

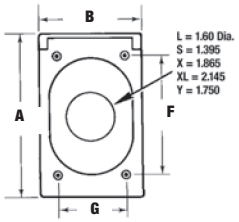


| Cat. No. | Description | Nominal Size (in.) | Max. Device Face Dia. | A (in.) | B (in.) | F (in.) | G (in.) |
|---|---|---|---|---|---|---|---|
| **Single Gang Vertical Covers** (Cast Aluminum) | | | | | | | |
| CFSR-L | Single receptacle – box mount | 1-9/16 | 1.600 | 4-9/16 | 2-13/16 | 3-1/4 | 1-7/8 |
| CFSR-S | Single receptacle – box mount | 1-3/8 | 1.395 | 4-9/16 | 2-13/16 | 3-1/4 | 1-7/8 |
| CFSR-X | Single receptacle – box mount | 1-27/32 | 1.865 | 4-9/16 | 2-13/16 | 3-1/4 | 1-7/8 |
| CFSR-XL | Single receptacle – box mount | 2-1/8 | 2.145 | 4-9/16 | 2-13/16 | 3-1/4 | 1-7/8 |
| CFSR-Y | Single receptacle – box mount | 1-3/4 | 1.750 | 4-9/16 | 2-13/16 | 3-1/4 | 1-7/8 |


FS-GKV

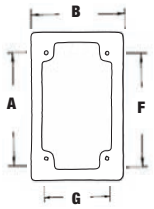


| Cat. No. | Description | A (in.) | B (in.) | F (in.) | G (in.) |
|---|---|---|---|---|---|
| **Single Gang Gasket** | | | | | |
| FS-GKV* | Single Gang – box mount – gasket | 4-9/16 | 2-13/16 | 3-1/4 | 1-7/8 |

* CSA not applicable

# FS Boxes and Covers

## Two Gang


2CWPDR

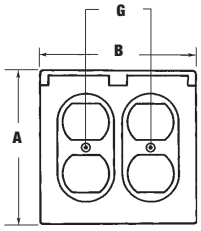



2CWPR-M

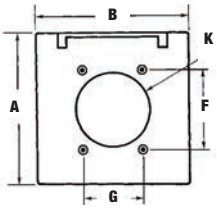



2CFSR-M

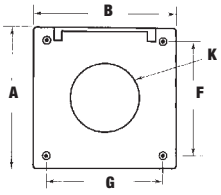



2CFST

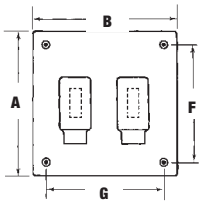



2CCB

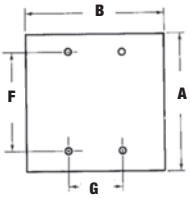



2CFSB

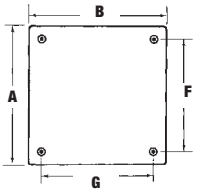


| Cat. No. | Description | A (in.) | B (in.) | F (in.) | G (in.) | K (in.) |
|---|---|---|---|---|---|---|
| **Two Gang** (Cast Aluminum) | | | | | | |
| 2CWPDR | Two duplex receptacles – device mount | 4-9/16 | 4-5/8 | – | 1-13/16 | – |
| 2CWPR-M | Single receptacle – hole – device mount | 4-9/16 | 4-5/8 | 2-3/8 | 1-13/16 | 2-1/4 |
| 2CFSR-M | Single receptacle – hole – box mount | 4-9/16 | 4-5/8 | 3-3/4 | 3-3/4 | 2-1/4 |
| 2CFST | Plunger style cover | 4-9/16 | 4-5/8 | 3-3/4 | 3-3/4 | – |
| 2CCB | Silver – device mount (stamped aluminum) | 4-9/16 | 4-5/8 | 3-9/32 | 1-13/16 | – |
| 2CFSB | Blank cover – box mount | 4-9/16 | 4-5/8 | 3-3/4 | 3-3/4 | – |

# FS Boxes and Covers

## Dry-Tite® FS Covers Two Gang


CIFS-42

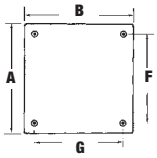



CIFS-62

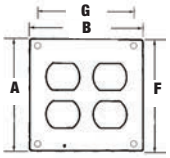



CIFS-69

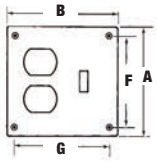



CIFS-92

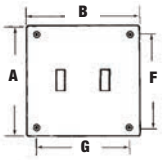


| Cat. No. | Description | A (in.) | B (in.) | F (in.) | G (in.) |
|---|---|---|---|---|---|
| **Two gang FS Covers*** (Stamped Aluminum) | | | | | |
| CIFS-42* | Blank – two gang – box mount | 4-5/8 | 4-9/16 | 3-1/4 | 3-11/16 |
| CIFS-62* | Two duplex receptacles – box mount | 4-5/8 | 4-9/16 | 3-1/4 | 3-11/16 |
| CIFS-69* | One duplex receptacles, one toggle switch – box mount | 4-5/8 | 4-9/16 | 3-1/4 | 3-11/16 |
| CIFS-92* | Two toggle switches – box mount | 4-5/8 | 4-9/16 | 3-1/4 | 3-11/16 |

* CIFS covers are CSA approved only


2CDR

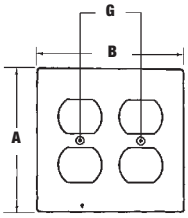



2CTS

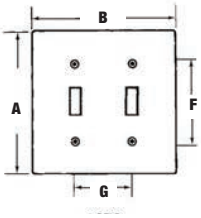



2CTDR

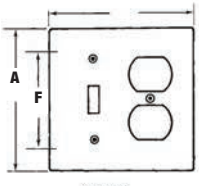


| Cat. No. | Description | A (in.) | B (in.) | F (in.) | G (in.) |
|---|---|---|---|---|---|
| **Two Gang** (Cast Aluminum) | | | | | |
| 2CDR | Two duplex receptacles – device mount | 4-9/16 | 4-5/8 | – | 1-13/16 |
| 2CTS | Two switch – device mount | 4-9/16 | 4-5/8 | 2-3/8 | 1-13/16 |
| 2CTDR | One switch and one duplex receptacle – device mount | 4-9/16 | 4-5/8 | 2-3/8 | – |

Dry-Tite® covers are approved for dry locations only

# FS Boxes and Covers

## Dry-Tite® FS Covers Single Gang


CDR

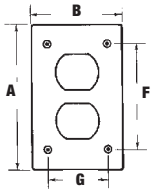



CTS

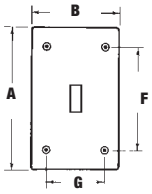


| Cat. No. | Description | A (in.) | B (in.) | F (in.) | G (in.) |
|---|---|---|---|---|---|
| **Single Gang** (Cast Aluminum) | | | | | |
| CDR | One duplex receptacle – box mount | 4-9/16 | 2-13/16 | 3-1/4 | 1-7/8 |
| CTS | One switch receptacle – box mount | 4-9/16 | 2-13/16 | 3-1/4 | 1-7/8 |


CIFS-4

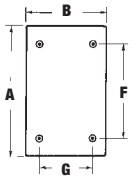



CIFS-7 / CIFS-5

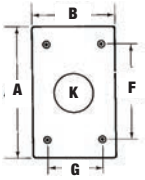



CIFS-6

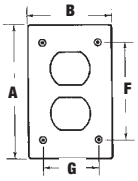



CIFS-9


CIFS-9-HV

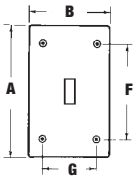


| Cat. No. | Description | A (in.) | B (in.) | F (in.) | G (in.) | K (in.) |
|---|---|---|---|---|---|---|
| **Single Gang FS Covers** (Stamped Aluminum) | | | | | | |
| CIFS-4 | Blank – single gang – box mount | 4-9/16 | 2-13/16 | 3-1/4 | 1-7/8 | – |
| CIFS-5 | 15 A single receptacle – box mount | 4-9/16 | 2-13/16 | 3-1/4 | 1-7/8 | 1-13/16 |
| CIFS-6 | One duplex receptacle – box mount | 4-9/16 | 2-13/16 | 3-1/4 | 1-7/8 | – |
| CIFS-7 | 20 A single locking receptacle – box mount | 4-9/16 | 2-13/16 | 3-1/4 | 1-7/8 | 1-19/32 |
| CIFS-9 | One toggle switch – box mount | 4-9/16 | 2-13/16 | 3-1/4 | 1-7/8 | – |
| CIFS-9-HV | One toggle switch (347 V) – box mount | 4-9/16 | 2-13/16 | 3-1/4 | 1-7/8 | – |


CRL

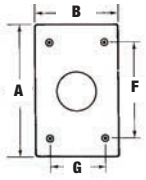


| Cat. No. | Description | Nominal Size (in.) | Max. Device Face Dia. | A (in.) | B (in.) | F (in.) | G (in.) |
|---|---|---|---|---|---|---|---|
| **Single Gang** (Cast Aluminum) | | | | | | | |
| CRL | Single receptacle – box mount | 1-9/16 | 1.600 | 4-9/16 | 2-13/16 | 3-1/4 | 1-7/8 |
| CRS | Single receptacle – box mount | 1-3/8 | 1.395 | 4-9/16 | 2-13/16 | 3-1/4 | 1-7/8 |

Dry-Tite® covers are approved for dry locations only

# FS Boxes and Covers

## Single Gang

All sizes take standard covers and accessories or devices. Integral mounting feet provide easy mounting. Grounding lugs included.

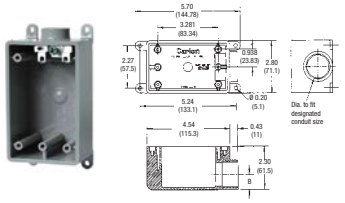

Type FSE

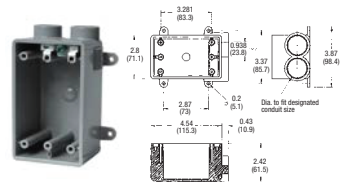

Type FSS

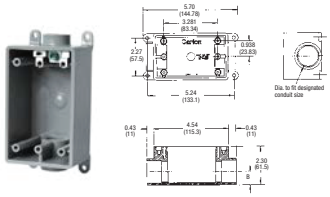

Type FSC

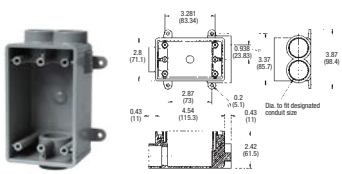

Type FSCC



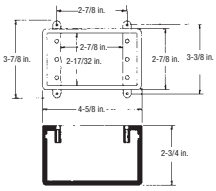

Type FD



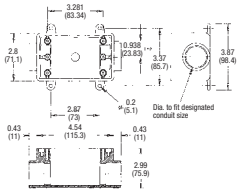

Type FDC



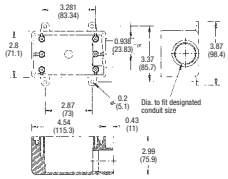

Type FDE

| Cat. No. | Description | Size (in.) | Volume Cu. In. | Std. Ctn. Qty. |
|---|---|---|---|---|
| **Type FSE** | | | | |
| C980DFN-CTN | For dead-end terminations. | 1/2 | 18 | 12 |
| C980EFN-CTN | | 3/4 | 18 | 12 |
| C980FFN-CTN | | 1 | 18 | 8 |
| **Type FSS** | | | | |
| C982DFN-CTN | For multiple dead-end circuit terminations or where additional support is required in stub-up applications. | 1/2 | 18 | 12 |
| C982EFN-CTN | | 3/4 | 18 | 12 |
| C982FFN-CTN | | 1 | 18 | 8 |
| **Type FSC** | | | | |
| C981DFN-CTN | For through terminations. | 1/2 | 18 | 12 |
| C981EFN-CTN | | 3/4 | 18 | 12 |
| C981FFN-CTN | | 1 | 18 | 8 |
| **Type FSCC** | | | | |
| C979DFN | For multiple through circuit termintions or where additional support is required in stub-up applications. | 1/2 | 18 | 15 |
| C979EFN | | 3/4 | 18 | 15 |
| C979FFN | | 1 | 18 | 15 |

| Cat. No. | Description | Size (in.) | Volume Cu. In. | Std. Ctn. Qty. |
|---|---|---|---|---|
| **Type FD** | | | | |
| C981DFN-CTN | For terminations where hub requirements vary according to application – hubs easily made with flared wood bit or hole saw. | – | 25 | 10 |
| **Type FDC** | | | | |
| C9811EN | For through terminations where large devices or additional wiring capacity is required. | 3/4 | 25 | 10 |
| C9811FN | | 1 | 25 | 10 |
| **Type FDE** | | | | |
| C9801DN | For dead-end terminations where large devices or additional wiring capacity is required. | 1/2 | 25 | 10 |
| C9801EN | | 3/4 | 25 | 10 |
| C9801FN | | 1 | 25 | 10 |

# FS Boxes and Covers

## Single Gang


E98SRCN-CAR


E98G20N


E98G30N-CAR


E98G5FN-CAR

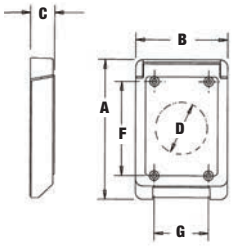


| Cat. No. | Description | Colour | A (in.) | B (in.) | C (in.) | D (in.) | F (in.) | G (in.) |
|---|---|---|---|---|---|---|---|---|
| **Single Gang Vertical Covers** (Nonmetallic) | | | | | | | | |
| E98SRCN-CAR | For 15 A or other single receptacles under 1.375 dia. | Grey | 4-53/64 | 3-11/16 | 53/64 | 1-25/64 ± 1/16 | 3-1/4 | 1-57/64 |
| E98G20N | For 20 A or other single receptacles under 1.625 dia. | Grey | 4-53/64 | 3-11/16 | 53/64 | 1-41/64 ± 1-23/32 | 3-1/4 | 1-57/64 |
| E98G30N-CAR | For 30 A or other single receptacles under 1.750 dia. | Grey | 4-53/64 | 3-11/16 | 53/64 | 1-49/64 ± 1-23/32 | 3-1/4 | 1-57/64 |
| E98G5FN-CAR | For 50 A or other single receptacles under 2.250 dia. | Grey | 4-53/64 | 3-11/16 | 53/64 | 2-1/4 ± 1/16 | 3-1/4 | 1-57/64 |


E98GCBN


E98SSCN-CAR


E98GDRN-CAR


E98GFCN-CAR

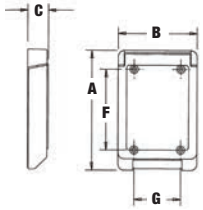


| Cat. No. | Description | Colour | A (in.) | B (in.) | C (in.) | F (in.) | G (in.) |
|---|---|---|---|---|---|---|---|
| **Single Gang Vertical Covers** (Nonmetallic) | | | | | | | |
| E98SSCN-CAR | Single switch | Grey | 4-53/64 | 3-11/16 | 53/64 | 3-1/4 | 1-57/64 |
| E98GDRN-CAR | Duplex receptacle | Grey | 4-53/64 | 3-11/16 | 53/64 | 3-1/4 | 1-57/64 |
| E98GFCN-CAR | GFCI receptacle – device opening dimensions: 2-5/8 H x 1-5/16 W | Grey | 4-53/64 | 3-11/16 | 53/64 | 3-1/4 | 1-57/64 |


E98TSCN

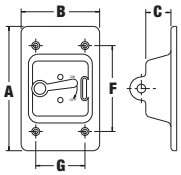



E980CN-CAR

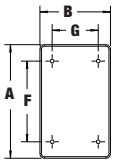


| Cat. No. | Description | Colour | A (in.) | B (in.) | C (in.) | F (in.) | G (in.) |
|---|---|---|---|---|---|---|---|
| **Single Gang Vertical Covers** (Nonmetallic) | | | | | | | |
| E98TSCN | Toggle switch | Grey | 4-3/4 | 3 | 31/32 | 3-9/32 | 1-57/64 |
| E980CN-CAR | Supplied with stainless steel mounting screws and gasket | Grey | 4-5/8 | 2-7/8 | – | 3-9/32 | 1-57/64 |
| E980CM-CAR | Supplied with stainless steel mounting screws and gasket | White | 4-5/8 | 2-7/8 | – | 3-9/32 | 1-57/64 |


E98DHGN-CAR


E98GHGN-CAR

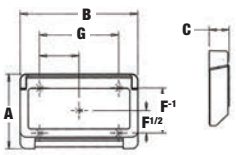


| Cat. No. | Description | Colour | A (in.) | B (in.) | C (in.) | F1 (in.) | F1/2 (in.) | G (in.) |
|---|---|---|---|---|---|---|---|---|
| **Single Gang Horizontal Covers** (Nonmetallic) | | | | | | | | |
| E98DHGN-CAR | Duplex receptacle | Grey | 3-1/8 | 4-7/8 | 13/16 | 1-57/64 | 61/64 | 3-9/32 |
| E98GHGN-CAR | GFCI horizontal | Grey | 3-1/8 | 4-7/8 | 13/16 | 1-57/64 | 61/64 | 3-9/32 |

# FS Boxes and Covers

## Two Gang

All sizes take standard covers and accessories or devices. Integral mounting feet provide easy mounting. Grounding screws are included.

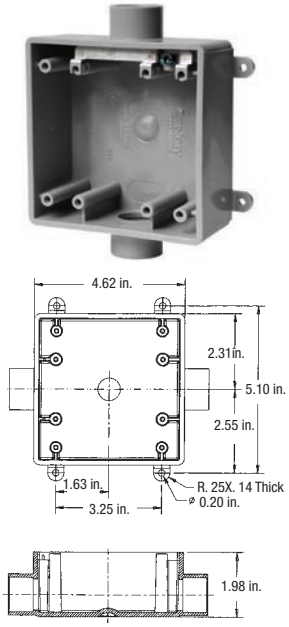


Type 2FSC

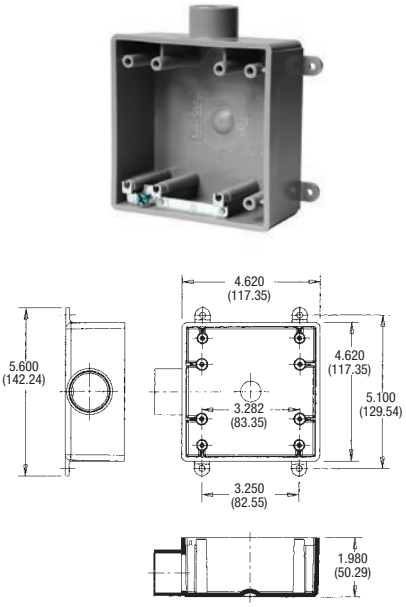


Type 2FSE

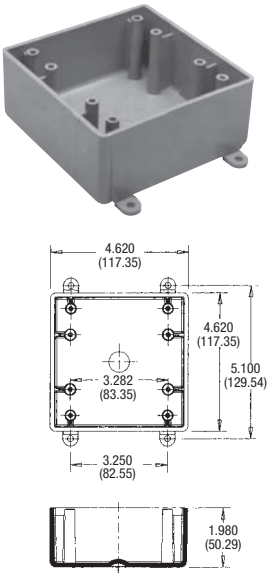


Type FS

| Cat. No. | Description | Size (in.) | Volume Cu. In. | Std. Ctn. Qty. |
|---|---|---|---|---|
| **Type 2FSC** | | | | |
| CE9812DR | For through terminations where two devices or additional wiring capacity is required. | 1/2 | 32 | 4 |
| CE9812E-CTN | | 3/4 | 32 | 10 |
| CE9812FR | | 1 | 32 | 10 |
| **Type 2FSE** | | | | |
| CE9802D-CTN | For dead-end terminations where two devices or additional wiring capacity is required. | 1/2 | 18 | 10 |
| CE9802E-CTN | | 3/4 | 18 | 10 |
| CE9802FR | | 1 | 18 | 1 |
| **Type FS** | | | | |
| CE9802 | For terminations where hub requirements vary according to application - hubs easily made with flared wood bit or hole saw. | N/A | 32 | 10 |

# FS Boxes and Covers

## Two Gang



E9G2DDN-CAR

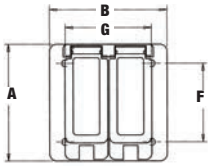




E9G2SSN

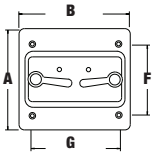




E9G2DSN-CAR



E9G2GTN-CAR

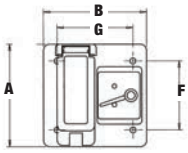


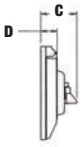




E9802CN-CAR

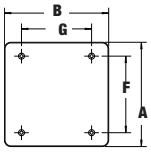


| Cat. No. | Description | Colour | A (in.) | B (in.) | C (in.) | D (in.) | F (in.) | G (in.) |
|---|---|---|---|---|---|---|---|---|
| **Two Gang Covers** (Nonmetallic) | | | | | | | | |
| E9G2DDN-CAR | Double duplex | Grey | 4-27/34 | 4-27/34 | – | – | 3-17/64 | 3-9/16 |
| E9G2SSN | Double toggle | Grey | 4-55/64 | 3-17/64 | – | – | 3-17/64 | 3-9/16 |
| E9802CN-CAR | Supplied with stainless steel mounting screws and gasket | Grey | 4-55/64 | 4-55/64 | – | – | 3-17/64 | 3-9/16 |
| E9G2GTN-CAR | Combination toggle / GFCI | Grey | 4-55/64 | 3-17/64 | 1-53/64 | 55/64 | 3-17/64 | 3-9/16 |
| E9G2DSN-CAR | Combination toggle / duplex receptacle | Grey | 4-55/64 | 3-17/64 | 1-53/64 | 55/64 | 3-17/64 | 3-9/16 |

# Star Teck® (ST) – Series Fittings for Teck and ACWU Cable

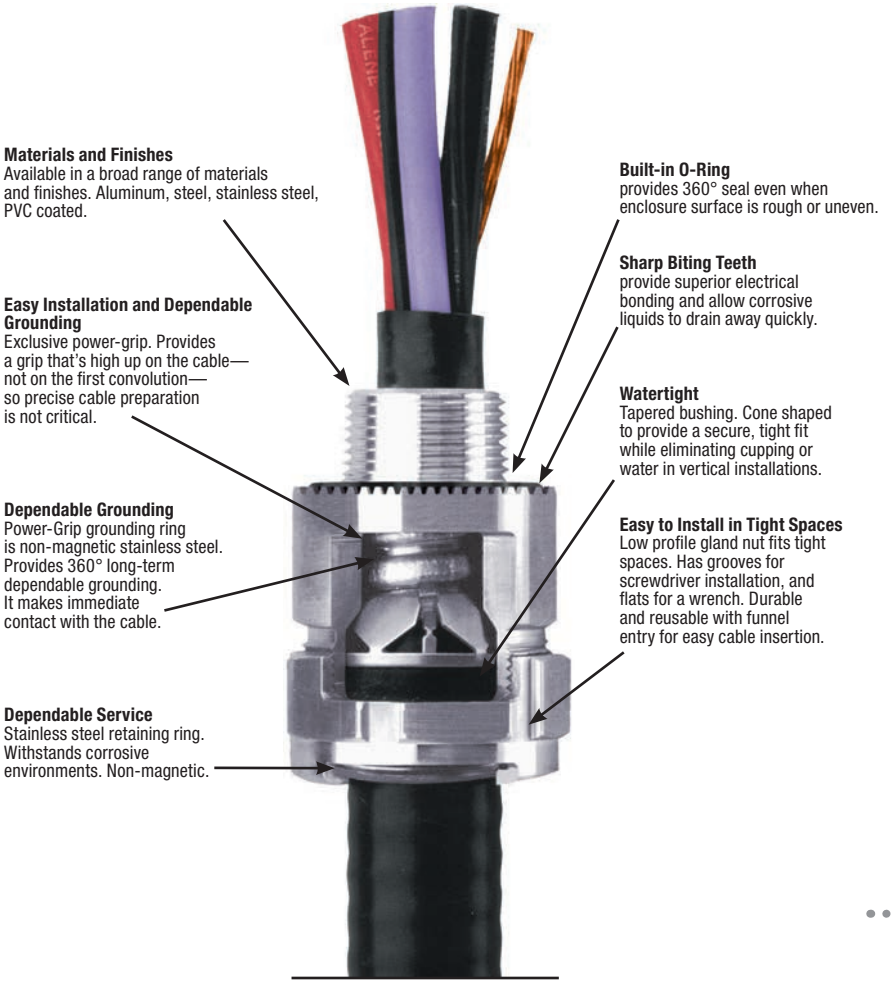

**Materials and Finishes**
Available in a broad range of materials and finishes. Aluminum, steel, stainless steel, PVC coated.

**Easy Installation and Dependable Grounding**
Exclusive power-grip. Provides a grip that's high up on the cable—not on the first convolution—so precise cable preparation is not critical.

**Dependable Grounding**
Power-Grip grounding ring is non-magnetic stainless steel. Provides 360° long-term dependable grounding. It makes immediate contact with the cable.

**Dependable Service**
Stainless steel retaining ring. Withstands corrosive environments. Non-magnetic.

**Built-in O-Ring**
provides 360° seal even when enclosure surface is rough or uneven.

**Sharp Biting Teeth**
provide superior electrical bonding and allow corrosive liquids to drain away quickly.

**Watertight**
Tapered bushing. Cone shaped to provide a secure, tight fit while eliminating cupping or water in vertical installations.

**Easy to Install in Tight Spaces**
Low profile gland nut fits tight spaces. Has grooves for screwdriver installation, and flats for a wrench. Durable and reusable with funnel entry for easy cable insertion.

## Easy Installation



1. Prepare cable

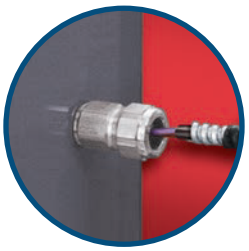

2. Insert cable



3. Tighten gland nut

**Warning:**

**Always ensure that the system is de-energized before performing any installation.**

## Suggested specifications for metal-clad cable or teck cable fittings in hazardous locations:

1. All metal-clad cable fittings for jacketed and non-jacketed interlocked armour cable, continuous corrugated cable or teck cable shall be approved by a nationally recognized testing laboratory, inspection agency or product evaluation organization.
2. Where corrugated-jacketed, metal-clad cable exposed to intermittent or continuous moisture is terminated into a threaded opening, the fitting shall be watertight type furnished with:

**a**. an elastomeric beveled bushing.

**b**. a funnel entry, splined gland nut.

**c**. a non-magnetic, stainless steel grounding device with dual grounding action.

**d**. a taper threaded hub.

**e**. a hexagonal body and gland nut as manufactured by Thomas & Betts (aluminum Series ST050-464).

**f**. a built in sealing O-ring on hub side.

3. With single conductor cable and/or in corrosive environments, aluminum fittings such as Thomas & Betts Series ST050-464 shall be installed. Where explosion-proof or dust-ignition-proof boxes are required by the code, Star Teck® fittings must be used in conjunction with an approved sealing fitting.

# Star Teck® (ST) – Series Fittings for Teck and ACWU Cable



3.5

**Star Teck® (ST Series)**

Star Teck® cable fittings are designed to accommodate a broad range of cables, thereby minimizing the possibility of mismatched cables and fittings in the field. They are available in hub sizes from 1/2 to 4 inches, and will handle outer jacket diameters from 0.525 to 4.340 inches.

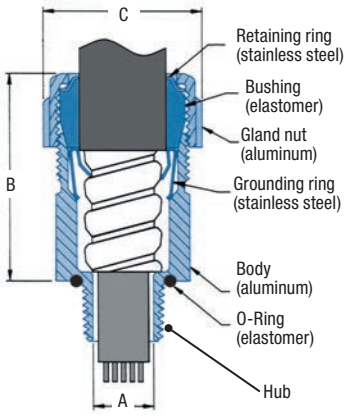


| Cat. No. | Hub Size (in.) | Range Over Jacket (in.) | | Dimensions (in.) | | |
|---|---|---|---|---|---|---|
| | | min. | max. | A | B* | C |
| ST038-461S† | 3/8 | 0.344 | 0.535 | 0.344 | 2.020 | 0.995 |
| ST050-462 | 1/2 | 0.525 | 0.650 | 0.390 | 2.020 | 1.224 |
| ST050-464 | 1/2 | 0.600 | 0.760 | 0.480 | 2.020 | 1.363 |
| ST050-465 | 1/2 | 0.725 | 0.885 | 0.607 | 2.133 | 1.633 |
| ST050-466 | 1/2 | 0.825 | 0.985 | 0.607 | 2.133 | 1.633 |
| ST075-467 | 3/4 | 0.880 | 1.065 | 0.809 | 2.450 | 2.080 |
| ST075-468 | 3/4 | 1.025 | 1.205 | 0.809 | 2.450 | 2.080 |
| ST100-469 | 1 | 1.187 | 1.375 | 1.034 | 2.601 | 2.230 |
| ST125-470 | 1-1/4 | 1.350 | 1.625 | 1.177 | 3.282 | 2.824 |
| ST125-550 | 1-1/4 | 1.500 | 1.625 | 1.365 | 3.282 | 2.824 |
| ST125-471 | 1-1/4 | 1.600 | 1.875 | 1.365 | 3.282 | 2.824 |
| ST150-472 | 1-1/2 | 1.700 | 1.965 | 1.552 | 3.620 | 3.260 |
| ST150-473 | 1-1/2 | 1.900 | 2.187 | 1.595 | 3.620 | 3.260 |
| ST200-551 | 2 | 1.900 | 2.187 | 1.710 | 3.640 | 3.620 |
| ST200-474 | 2 | 2.100 | 2.375 | 1.990 | 3.640 | 3.620 |
| ST200-475 | 2 | 2.300 | 2.565 | 2.052 | 3.640 | 4.020 |
| ST200-476 | 2 | 2.500 | 2.750 | 2.052 | 3.640 | 4.020 |
| ST250-477 | 2-1/2 | 2.380 | 2.640 | 2.255 | 4.700 | 4.750 |
| ST250-478 | 2-1/2 | 2.580 | 2.840 | 2.455 | 4.700 | 4.750 |
| ST300-479 | 3 | 2.790 | 3.060 | 2.655 | 4.700 | 5.050 |
| ST300-480 | 3 | 3.000 | 3.270 | 2.885 | 4.790 | 5.480 |
| ST300-481 | 3 | 3.210 | 3.480 | 3.057 | 4.790 | 5.480 |
| ST350-482 | 3-1/2 | 3.420 | 3.690 | 3.285 | 4.790 | 5.980 |
| ST350-483 | 3-1/2 | 3.610 | 3.870 | 3.455 | 4.790 | 5.980 |
| ST400-484 | 4 | 3.810 | 4.030 | 3.625 | 4.840 | 6.435 |
| ST400-485 | 4 | 3.965 | 4.185 | 3.770 | 4.840 | 6.435 |
| ST400-486 | 4 | 4.120 | 4.340 | 3.935 | 4.840 | 6.435 |

* Approximate dimension before installation
† Only available in steel

## Materials

**Aluminum:** The above listed catalogue numbers relate to aluminum fittings. The body and gland nut on hub sizes 1/2 to 1 inch are machined from copper-free bar stock and 1-1/4 to 4 inches are made of cast copper-free aluminum

**Steel:** To order a steel or malleable iron fitting, add the suffix "S" to the catalogue number (example ST050-464S). The body and gland nut on hub sizes 1/2 to 1 inch are made of steel and 1-1/4 to 4 inches are made of malleable iron. Plating is electro-deposited zinc

**Stainless Steel:** To order a 316 stainless steel fitting, add the suffix "SS" to the catalogue number (example ST050-464SS). Only available for 1/2 thru 2 inch hub sizes

**PVC-Coated Aluminum and Steel:** To order, add the suffix "PVC" to the catalogue number (example ST050-464PVC or ST050-464SPVC)

***Note - When using fittings on single conductor cable, aluminum fittings and aluminum locknuts must be used***

## Certifications

**Type HLA. CSA Certified** Class II, Divisions 1 and 2, Groups E, F, and G; Class III and Enclosure Type 4, Type 4X, Classes I, II and III. Suitable for Class I Division 1 locations when used in combination with a certified Class I sealing fitting. Also suitable for Class I Division 2 when installed in accordance with the applicable electrical code

**Complies with IEC** requirements for Class I, Zones 1 and 2, when used in combination with a certified Class I hazardous location sealing fitting

**UL Listed** Class I, Division 2; Class II, Division 2 and Class III. Meets sealing requirements for type 4 enclosures
PVC-coated fittings are only approved for ordinary location areas (OLA)

# 18 AWG 300V Instrumentation Cable

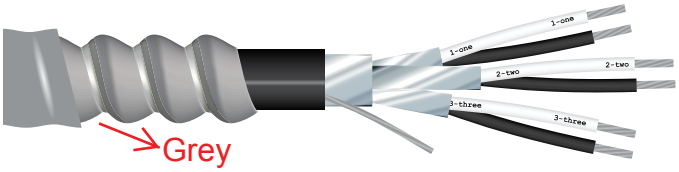


| Product Code | AWG Size | # of Pairs or Triads | OD | | Weight Aluminum | | Weight Steel | |
|---|---|---|---|---|---|---|---|---|
| | | | In | mm | lb/mft | kg/km | lb/mft | kg/km |
| **33H1801X** | 18 | 1 Pair | 0.6 | 15.2 | 160 | 238 | 258 | 384 |
| **33H1802X** | 18 | 2 Pair | 0.78 | 19.8 | 247 | 368 | 384 | 572 |
| **33H1804X** | 18 | 4 Pair | 0.88 | 22.4 | 340 | 504 | 500 | 744 |
| **33H1806X** | 18 | 6 Pair | 0.98 | 24.9 | 420 | 625 | 644 | 958 |
| **33H1808X** | 18 | 8 Pair | 1.03 | 26.2 | 543 | 808 | 827 | 1230 |
| **33H1812X** | 18 | 12 Pair | 1.28 | 32.5 | 725 | 1070 | 1045 | 1555 |
| **33H1816X** | 18 | 16 Pair | 1.37 | 34.8 | 850 | 1265 | 1210 | 1801 |
| **33H1824X** | 18 | 24 Pair | 1.63 | 41.4 | 1100 | 1637 | 1510 | 2247 |
| **33H1836X** | 18 | 36 Pair | 1.8 | 45.7 | 1465 | 2180 | 1960 | 2917 |
| **33K1801X** | 18 | 1 Triad | 0.61 | 15.5 | 175 | 260 | 275 | 409 |
| **33K1802X** | 18 | 2 Triad | 0.81 | 20.6 | 275 | 409 | 417 | 621 |
| **33K1804X** | 18 | 4 Triad | 0.93 | 23.6 | 385 | 573 | 555 | 826 |
| **33K1806X** | 18 | 6 Triad | 1.115 | 28.2 | 535 | 796 | 780 | 1161 |
| **33K1808X** | 18 | 8 Triad | 1.18 | 30 | 680 | 1012 | 995 | 1481 |
| **33K1812X** | 18 | 12 Triad | 1.4 | 35.6 | 916 | 1363 | 1215 | 1808 |
| **33K1816X** | 18 | 16 Triad | 1.5 | 38.1 | 10200 | 1518 | 1400 | 2083 |
| **33K1824X** | 18 | 24 Triad | 1.8 | 45.7 | 1335 | 1987 | 1775 | 2642 |

3.6

# 18 AWG 600V Instrumentation Cable

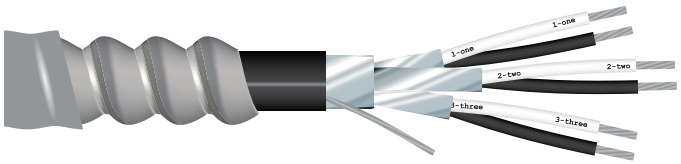


| Product Code | AWG Size | # of Pairs or Triads | OD | | Weight Aluminum | | Weight Steel | |
|---|---|---|---|---|---|---|---|---|
| | | | In | mm | lb/mft | kg/km | lb/mft | kg/km |
| **33I1801X** | 18 | 1 Pair | 0.61 | 15.5 | 154 | 229 | 257 | 382 |
| **33I1802X** | 18 | 2 Pair | 0.82 | 20.83 | 238 | 354 | 387 | 575 |
| **33I1804X** | 18 | 4 Pair | 0.96 | 24.5 | 355 | 499 | 504 | 750 |
| **33I1836X** | 18 | 36 Pair | 1.85 | 47.1 | 1721 | 2561 | 2300 | 3423 |
| **33I1850X** | 18 | 50 Pair | 2.29 | 58.1 | 2472 | 3679 | 3361 | 5001 |
| **33L1808X** | 18 | 8 Triad | 1.29 | 32.8 | 673 | 1002 | 988 | 1470 |

# 14 AWG Multi-Conductor Teck 90 (XLPE) -40°C 600V

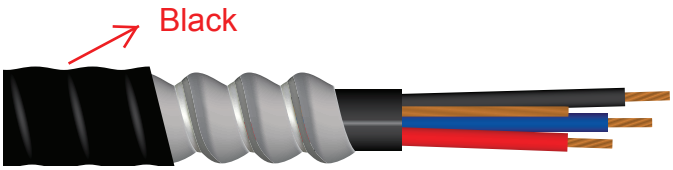


| Product Code | No. of Cond. | Bonding AWG (Bare Copper) | Insulation Thickness | | Inner Jacket Thickness | | Inner Jacket Diameter | | Armour Diameter | | Outer Jacket Diameter | | Weight Aluminum (Armoured) | |
|---|---|---|---|---|---|---|---|---|---|---|---|---|---|---|
| | | | Inches | mm | Inches | mm | Inches | mm | Inches | mm | Inches | mm | lbs/mft | kg/km |
| 3.6.1 **19A1402** | 2 | 14 | .030 | 0.76 | 0.045 | 1.14 | 0.369 | 9.37 | 0.600 | 15.24 | 0.688 | 17.48 | 191 | 284 |
| **19A1403** | 3 | 14 | .030 | 0.76 | 0.045 | 1.14 | 0.390 | 9.91 | 0.621 | 15.77 | 0.709 | 18.01 | 225 | 335 |
| **19A1404** | 4 | 14 | .030 | 0.76 | 0.045 | 1.14 | 0.444 | 11.27 | 0.676 | 17.17 | 0.761 | 19.33 | 266 | 396 |
| **19A1405** | 5 | 14 | .030 | 0.76 | 0.045 | 1.14 | 0.472 | 11.99 | 0.703 | 17.86 | 0.787 | 19.99 | 306 | 455 |
| **19A1406** | 6 | 14 | .030 | 0.76 | 0.045 | 1.14 | 0.515 | 13.08 | 0.743 | 18.87 | 0.828 | 21.03 | 316 | 471 |
| **19A1407** | 7 | 14 | .030 | 0.76 | 0.045 | 1.14 | 0.522 | 13.26 | 0.755 | 19.18 | 0.844 | 21.44 | 338 | 502 |
| **19A1408** | 8 | 14 | .030 | 0.76 | 0.060 | 1.52 | 0.597 | 15.16 | 0.825 | 20.96 | 0.909 | 23.09 | 384 | 571 |
| **19A1410** | 10 | 14 | .030 | 0.76 | 0.060 | 1.52 | 0.671 | 17.04 | 0.898 | 22.81 | 0.984 | 24.99 | 448 | 667 |
| **19A1412** | 12 | 14 | .030 | 0.76 | 0.060 | 1.52 | 0.700 | 17.78 | 0.927 | 23.55 | 1.013 | 25.73 | 489 | 728 |
| **19A1415** | 15 | 14 | .030 | 0.76 | 0.060 | 1.52 | 0.750 | 19.05 | 0.990 | 25.15 | 1.090 | 27.69 | 583 | 868 |
| **19A1420** | 20 | 14 | .030 | 0.76 | 0.060 | 1.52 | 0.850 | 21.59 | 1.105 | 28.07 | 1.189 | 30.20 | 766 | 1140 |
| **19A1425** | 25 | 14 | .030 | 0.76 | 0.080 | 2.03 | 0.983 | 24.99 | 1.239 | 31.47 | 1.326 | 33.68 | 852 | 1268 |
| **19A1430** | 30 | 14 | .030 | 0.76 | 0.080 | 2.03 | 1.060 | 26.92 | 1.311 | 33.30 | 1.399 | 35.53 | 995 | 1481 |
| **19A1440** | 40 | 14 | .030 | 0.76 | 0.080 | 2.03 | 1.179 | 29.95 | 1.431 | 36.35 | 1.519 | 38.86 | 124 | 1822 |
| **19A1450** | 50 | 14 | .030 | 0.76 | 0.080 | 2.03 | 1.282 | 32.56 | 1.535 | 38.99 | 1.642 | 41.71 | 1468 | 2184 |

# 16 AWG 600V Armcon

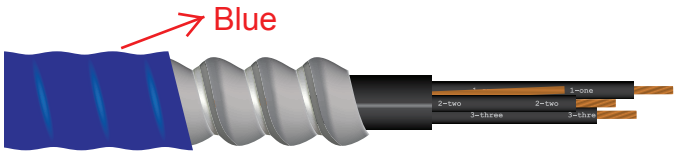


| Product Code | # of Cond. | Amp @ 30°C | Nominal OD inner jacket | | Nominal OD Armour | | Nominal OD Outer Jacket | | Weight Aluminum (Armoured) | |
|---|---|---|---|---|---|---|---|---|---|---|
| | | | mm | In | mm | In | mm | In | lbs/mft | kg/km |
| **46A1602-40** | 2 | 10 | 8.79 | 0.35 | 14.88 | 0.59 | 17.73 | 0.7 | 195 | 290.22 |
| **46A1603-40** | 3 | 10 | 9.49 | 0.37 | 15.6 | 0.61 | 18.43 | 0.73 | 216.12 | 321.62 |
| **46A1604-40** | 4 | 8 | 10.25 | 0.4 | 16.36 | 0.64 | 19.2 | 0.76 | 238.06 | 354.27 |
| **46A1605-40** | 5 | 8 | 10.92 | 0.43 | 17.02 | 0.67 | 19.87 | 0.78 | 259.84 | 386.68 |
| **46A1606-40** | 6 | 8 | 11.84 | 0.47 | 17.93 | 0.71 | 20.78 | 0.82 | 284.81 | 423.85 |
| **46A1607-40** | 7 | 7 | 12.75 | 0.5 | 18.85 | 0.74 | 21.69 | 0.85 | 310.22 | 461.66 |
| **46A1608-40** | 8 | 7 | 14.46 | 0.57 | 20.55 | 0.81 | 23.4 | 0.92 | 360.81 | 536.94 |
| **46A1610-40** | 10 | 7 | 15.65 | 0.62 | 21.74 | 0.86 | 24.59 | 0.97 | 397.91 | 592.15 |
| **46A1612-40** | 12 | 7 | 16.1 | 0.63 | 22.2 | 0.87 | 25.05 | 0.99 | 427.17 | 635.7 |
| **46A1615-40** | 15 | 7 | 17.32 | 0.68 | 23.42 | 0.92 | 26.26 | 1.03 | 478.14 | 711.55 |
| **46A1620-40** | 20 | 7 | 19.61 | 0.77 | 25.2 | 0.99 | 28.04 | 1.1 | 613.89 | 913.57 |
| **46A1625-40** | 25 | 6 | 22.76 | 0.9 | 28.85 | 1.14 | 31.7 | 1.25 | 759.63 | 1130.46 |
| **46A1630-40** | 30 | 6 | 24.01 | 0.95 | 30.1 | 1.19 | 32.9 | 1.3 | 834.31 | 1241.59 |
| **46A1640-40** | 40 | 6 | 26.72 | 1.05 | 32.82 | 1.29 | 35.66 | 1.4 | 1008.65 | 1501.04 |
| **46A1650-40** | 50 | 6 | 29.59 | 1.16 | 35.69 | 1.41 | 38.52 | 1.52 | 1174.61 | 1748 |

3.6.2

# 16 AWG 600V Armcon Connectors

| No. of Cond. | Product Code | Connectors | | | |
|---|---|---|---|---|---|
| | | OZG/Crouse Hinds | EGS/Iberville | Explosion Proof | Resin |
| **2** | 46A1602-40 | 41TECK0502 | 41TMC2050075A | 41TMC2X050075A | RAPIDEX30 |
| **3** | 46A1603-40 | 41TECK0503 | 41TMC2050099A | 41TMC2X050099A | RAPIDEX30 |
| **4** | 46A1604-40 | 41TECK0503 | 41TMC2050099A | 41TMC2X050099A | RAPIDEX30 |
| **5** | 46A1605-40 | 41TECK0503 | 41TMC2050099A | 41TMC2X050099A | RAPIDEX30 |
| **6** | 46A1606-40 | 41TECK0503 | 41TMC2050099A | 41TMC2X050099A | RAPIDEX30 |
| **7** | 46A1607-40 | 41TECK0755 | 41TMC2075118A | 41TMC2X075118A | RAPIDEX30 |
| **8** | 46A1608-40 | 41TECK0755 | 41TMC2075118A | 41TMC2X075118A | RAPIDEX30 |
| **10** | 46A1610-40 | 41TECK0755 | 41TMC2075118A | 41TMC2X075118A | RAPIDEX30 |
| **12** | 46A1612-40 | 41TECK0755 | 41TMC2075118A | 41TMC2X075118A | RAPIDEX30 |
| **15** | 46A1615-40 | 41TECK0756 | 41TMC2075118A | 41TMC2X075118A | RAPIDEX30 |
| **20** | 46A1620-40 | 41TECK1007 | 41TMC2100137A | 41TMC2X100137A | RAPIDEX30 |
| **25** | 46A1625-40 | 41TECK1007 | 41TMC2100137A | 41TMC2X100137A | RAPIDEX30 |
| **30** | 46A1630-40 | 41TECK1258 | 41TMC2125162A | 41TMC2X125162A | RAPIDEX30 |
| **40** | 46A1640-40 | 41TECK1258 | 41TMC2125162A | 41TMC2X125162A | RAPIDEX30 |
| **50** | 46A1650-40 | 41TECK1259 | 41TMC2125162A | 41TMC2X125162A | RAPIDEX30 |

REVIEWED BY GC CONTRACTOR

Kudlik Construction Ltd.

NAME: Sandra Rousseau P.Eng

DATE: May 27, 2019

VEOLIA

# SHOP DRAWINGS

**Network Architecture**

Date : 2019-05-24

| General Information | | | |
|---|---|---|---|
| Project | WWTP UPGRADE - IQALUIT | | |
| Client: | Kudlik Construction Ltd. | Project Number | 2018-062 |
| To: | Sandra Rousseau P.Eng., Project Manger | E-mail: | srousseau@kudlik.biz |
| Contractor | Veolia Water Technologies Canad Inc. | Project Number | 5000218036 |
| Address | 4105 Sartelon, Ville St. Laurent PQ, H4S 2B3 | | |
| Project Manger: | Clément Bekaert | E-mail: | clement.bekaert@veolia.com |
| Phone: | 514-334-7230 x 3243 | Cell: | 514-246-6232 |

| Information on the Equipment | | | |
|---|---|---|---|
| Specialty: | Electrical / automation | | |
| Equipment: | BFP Polymer Dosing system / DAF Polymer dosing system | | |
| Drawing Reference: | | | |
| Specification reference: | 46.36.11 | | |
| Article: | | | |
| Revision: | Rev02 | | |
| Titre: | Hydrapol Panel - Polymer dosing junction boxes- Electrical Drawings | | |
| Numero client: | DA-Veolia-ED-02-Hydrapol | | |
| Numero Veolia | 5000218036-EPL-0006-AUT-VWT, EPL-0007-AUT-VWT, EPL-0004-AUT-VWT, EPL-0005-AUT-VWT | | |
| Envoyer pour: | Approbation/Information: | Information | |

**Consultant Approval**

SHOP DRAWINGS ARE REVIEWED UNLESS NOTED OTHERWISE

| | |
|---|---|
| REVIEWED AS MODIFIED | X |
| REVISE & RESUBMIT | |
| SEAL & SIGNATURE REQUIRED | |

Stantec

DATE June 3, 2019

SIGNATURE

REVIEW BY STANTEC IS FOR THE SOLE PURPOSE OF ASCERTAINING GENERAL CONFORMITY WITH DESIGN. CONTRACTOR IS RESPONSIBLE FOR DIMENSIONS, FABRICATION AND CONSTRUCTION METHODS, COORDINATION OF SUB-TRADES, DETAIL DESIGN OF COMPONENTS, AND ERRORS OR OMISSIONS ON SHOP DRAWINGS.

-Ensure that 'ESD triggered" is included in the "General Fault" output to CPL-901.
-Ensure that the aging tanks are complete with loop splitters for level indication duplicate output signal to CPL-901.
-Include CSA certifications in O&M manual submission.

4105 Sartelon
Ville St. Laurent, PQ
H4S-2B3

Phone: 514-334-7230
Fax: 514-334-5070
www.veoliawatertechnologies.ca

# HYDRAPOL 250 CONTROL PANEL
# PROJECT - 5000218036
# LCP-04-700
# DAF POLYMER DOSING SYSTEM

| REV. | DESCRIPTION | DATE | REV. | VERIC/HK | APPR. | ECN |
|---|---|---|---|---|---|---|
| 4 | AS COMMISSIONNING | 2019-05-17 | SD | | | |
| 3 | AS BUILT | 2019-05-06 | SD | | | |
| 2 | FOR FAB | 2019-04-02 | RM | | | |
| 1 | FOR APPROVAL | 2019-03-18 | RM | | | |

CONFIDENTIALITY AND INTELLECTUAL PROPERTY NOTICE
ALL INFORMATION CONTAINED IN THIS DOCUMENT IS THE SOLE PROPERTY OF VEOLIA WATER TECHNOLOGIES CANADA INC. AND MAY CONTAIN CONFIDENTIAL AND PROPRIETARY OR OTHER INTELLECTUAL PROPERTY LAWS. THE DESIGN CONCEPTS AND INFORMATION CONTAINED HEREIN ARE PROPRIETARY TO "I.D.C." AND ARE SUBMITTED TO YOU IN CONFIDENCE. THIS DOCUMENT MUST BE USED ONLY FOR THE PURPOSE FOR WHICH THE DOCUMENT IS EXPRESSLY SUBMITTED AND NO IMPLICIT LICENCE IS GRANTED BY THE SUBMISSION OF THIS DOCUMENT. IT MUST NOT BE COPIED, CONFIDENTIAL AND PRI LEGED INFORMATION OF V.W.T. AND THEY MUST NOT BE DISCLOSED, REPRODUCED, LOANED, INSETTED OR USED IN WHOLE OR IN PART FOR ANY PURPOSE WITHOUT THE PERMISSION OF V.W.T. V.W.T. ASSUMES NO RESPONSIBILITY OR LIABILITY FOR THE USE OF THIS DOCUMENT OR THE DESIGN CONCEPTS AND INFORMATION CONTAINED HEREIN FOR PURPOSES OTHER THAN THE SPECIFIC PROJECT RELATED TO THE ATTACHED PURPOSES OF THIS DOCUMENT. IN NO EVENT SHALL THIS DOCUMENT OR THE DESIGN CONCEPTS AND INFORMATION CONTAINED HEREIN BE CONSTRUED AS GRANTING ANY LICENSE OR RIGHT OF V.W.T. ALL COPYRIGHT, PATENT AND OTHER INTELLECTUAL PROPERTY RIGHTS ARE RESERVED. ACCEPTANCE OF THE DELIVERY OF THIS DOCUMENT CONSTITUTES AGREEMENT TO THESE TERMS AND CONDITIONS.

AVIS DE CONFIDENTIALITÉ ET DE PROPRIÉTÉ INTELLECTUELLE
L'INFORMATION CONTENUE DANS CE DOCUMENT EST LA PROPRIÉTÉ EXCLUSIVE DE VEOLIA WATER TECHNOLOGIES CANADA INC. ET PEUT CONTENIR DES LOIS SUR LA PROPRIÉTÉ INTELLECTUELLE. LES DESIGN CONCEPTS ET L'INFORMATION CONTENUE DANS CE DOCUMENT SONT CONFIDENTIELS ET PROPRIÉTAIRES À "I.D.C." ET SONT SOUMIS À VOUS EN CONFIANCE. CE DOCUMENT DOIT ÊTRE UTILISÉ UNIQUEMENT AUX FINS POUR LESQUELLES CE DOCUMENT EST EXPRESSÉMENT SOUMIS ET AUCUNE LICENCE IMPLICITE N'EST ACCORDÉE DE PAR LA SOUMISSION DE CE DOCUMENT. IL NE DOIT PAS ÊTRE COPIÉ, INFORMATIONS PRIVILÉGIÉES ET CONFIDENTIELLES DE V.W.T. ET NE DOIVENT PAS ÊTRE DIVULGUÉS, REPRODUITS, PRÊTÉS, RÉINSÉRÉS OU UTILISÉS EN TOUTE OU EN PARTIE À QUELQUE FIN QUE CE SOIT SANS LA PERMISSION DE V.W.T. V.W.T. DÉCLINE TOUTE RESPONSABILITÉ OU OBLIGATION POUR L'UTILISATION DE CE DOCUMENT OU DES DESIGNS CONCEPTS ET L'INFORMATION CONTENUE DANS LES PRÉSENTES À DES FINS AUTRES QUE CELLES LIÉES AUX BUTS SPÉCIFIQUES DU PROJET CI-JOINT. EN AUCUN CAS CE DOCUMENT NE DOIT ÊTRE INTERPRÉTÉ COMME ACCORDANT UNE LICENCE OU UN DROIT DE V.W.T. TOUS DROITS D'AUTEUR, BREVET ET AUTRES DROITS DE PROPRIÉTÉ INTELLECTUELLE SONT RÉSERVÉS. L'ACCEPTATION DE LA LIVRAISON DE CE DOCUMENT CONSTITUE UNE ENTENTE À CES MODALITÉS ET CONDITIONS.

| | |
|---|---|
| DESSINÉ DESIGNER | M.JACQUES |
| DATE | 2019-02-12 |
| VÉRIFIÉ CHECKER | S.DUQUET |
| DATE | 2019-02-12 |
| INGÉNIEUR ENGINEER | |
| DATE | |
| ECHELLE/SCALE: | |

TITRE/TITLE: HYDRAPOL 250 CONTROL PANEL
TITLE PAGE

CLIENT: IQALUIT WWTP

VEOLIA WATER TECHNOLOGIES CANADA INC. 4105 Sartelon, Saint-Laurent, Qc, Canada. Tel: (514) 334-7230

| PROJET/PROJECT + DESSIN/DRAWING No | INTERNE/INTERNAL | FEUILLET/SHEET | REV. |
|---|---|---|---|
| 5000218036-EPL-0006-AUT-VWT | JOME01 | 1 DE 5 | 4 |

LR 60892

STD: "D" 22x34 | EBI ELECTRIC - 58011-P01 | BAR = 1" À L'ÉCHELLE D'IMPRESSION/BAR = 1" AT PLOT SCALE

04-07-2015 14:49:00 C:\Users\mjacques\Desktop\CARTOUCHE\VWT\RENOVE 2015.dwg mjacques

DRAWING INDEX

| DESCRIPTION | DRAWING NUMBER |
|---|---|
| CONTROL PANEL | |
| TITLE PAGE | 5000218036-EPL-0006-AUT-VWT-01 |
| DRAWING LIST & LEGEND | 5000218036-EPL-0006-AUT-VWT-02 |
| OUTSIDE PANEL LAYOUT | 5000218036-EPL-0006-AUT-VWT-03 |
| INSIDE PANEL LAYOUT | 5000218036-EPL-0006-AUT-VWT-04 |
| PARTS LIST | 5000218036-EPL-0006-AUT-VWT-05 |
| | |
| SCHEMATIC DIAGRAM 600VAC | 5000218036-ELD-0006-AUT-VWT-01 |
| SCHEMATIC DIAGRAM 120VAC | 5000218036-ELD-0006-AUT-VWT-02 |
| SCHEMATIC DIAGRAM 120VAC | 5000218036-ELD-0006-AUT-VWT-03 |
| SCHEMATIC DIAGRAM 24VDC | 5000218036-ELD-0006-AUT-VWT-04 |
| SCHEMATIC DIAGRAM 24VDC | 5000218036-ELD-0006-AUT-VWT-05 |
| ETHERNET NETWORK AND PLC | 5000218036-ELD-0006-AUT-VWT-06 |
| RACK 00 SLOT 01 INPUTS, 1769-L16ER-BB1B | 5000218036-ELD-0006-AUT-VWT-07 |
| RACK 00 SLOT 01 OUTPUTS, 1769-L16ER-BB1B | 5000218036-ELD-0006-AUT-VWT-08 |
| RACK 0, SLOT 02, 1734-IEBC | 5000218036-ELD-0006-AUT-VWT-09 |

| COLORS AND WIRING GAGES | | |
|---|---|---|
| 120VAC POWER | BLACK | 14AWG |
| 120VAC CONTROL | RED | 14AWG |
| NEUTRE | WHITE | 14AWG |
| DRY CONTACT | YELLOW | 14AWG |
| 24VDC | BLUE(+), BLUE / WHITE(-) | 16AWG (0 TO 9A) 14AWG (10A & +) |
| GROUND | GREEN | 14AWG |
| ISOLATED GROUND | GREEN / YELLOW | 14AWG |
| ANALOG I/O TWISTED PAIRS | BLACK(+), WHITE(-) | 18AWG |
| DIGITAL I/O 120VA | RED | 16AWG |
| DIGITAL I/O 24VDC | BLUE | 16AWG |
| LOW VOLTAGE (12, 24, 48VDC) | BLUE | 16AWG (0 À 9A) 14AWG (10A & +) |
| CONTROL CIRCUIT 5 TO 60VDC | BLUE(+), BLUE/WHITE(-), GREEN(GND) | 16AWG (0 À 9A) 14AWG (10A & +) |

SUPPLY WIRING IDENTIFICATION

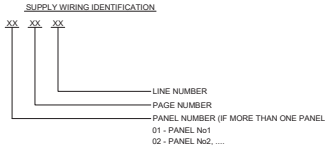


LEGEND LIST

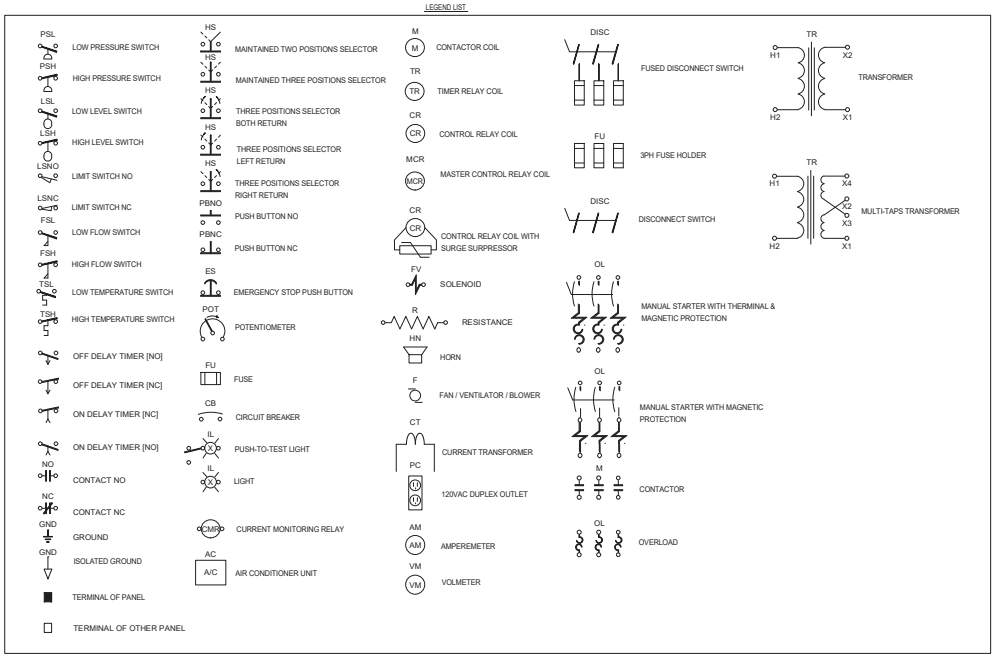


LR 60892

| REV. | DESCRIPTION | DATE | REV. | VERIF/CHK | APPR | ECN |
|---|---|---|---|---|---|---|
| 4 | AS COMMISSIONNING | 2019-05-17 | SD | | | |
| 3 | AS BUILT | 2019-05-06 | SD | | | |
| 2 | FOR FAB | 2019-04-02 | RM | | | |
| 1 | FOR APPROVAL | 2019-03-18 | RM | | | |

CONFIDENTIALITY AND INTELLECTUAL PROPERTY NOTICE
ALL INFORMATION CONTAINED IN THIS DOCUMENT IS THE SOLE PROPERTY OF VEOLIA WATER TECHNOLOGIES CANADA INC. AND CONTAINS CONFIDENTIAL AND PROPRIETARY INFORMATION AND OTHER INTELLECTUAL PROPERTY LAWS. THE DESIGN CONCEPTS AND INFORMATION CONTAINED HEREIN ARE PROPRIETARY TO V.W.T. AND ARE SUBMITTED IN CONFIDENCE. THIS DOCUMENT AND THE INFORMATION MUST BE USED ONLY FOR THE PURPOSE FOR WHICH THE DOCUMENT IS IS EXPRESSLY SUBMITTED AND NO IMPLICIT LICENCE IS GRANTED BY THE SUBMISSION OF THIS DOCUMENT. THIS DOCUMENT CONTAINS CONFIDENTIAL AND PRIVILEGED INFORMATION OF V.W.T. AND THEY MUST NOT BE DISCLOSED, REPRODUCED, LOANED, WHETTED OR USED IN WHOLE OR IN PART FOR ANY PURPOSE WITHOUT THE PRIOR WRITTEN CONSENT OF V.W.T. V.W.T. ASSUMES NO RESPONSIBILITY OR LIABILITY FOR THE USE OF THIS DOCUMENT OR THE DESIGN CONCEPTS AND INFORMATION CONTAINED HEREIN FOR PURPOSES OTHER THAN THE SPECIFIC PROJECT RELATED TO THE OTHER OUR PURPOSE OF THIS DOCUMENT. IN NO EVENT SHALL THIS DOCUMENT OR THE DESIGN CONCEPTS AND INFORMATION CONTAINED HEREIN BE USED BY ANY PERSON FOR ANY PURPOSE OTHER THAN THE SPECIFIC PROJECT WITHOUT THE WRITTEN CONSENT OF V.W.T. ALL COPYRIGHT, PATENT AND OTHER INTELLECTUAL PROPERTY RIGHTS ARE RESERVED. ACCEPTANCE OF THE DELIVERY OF THIS DOCUMENT CONSTITUTES AGREEMENT TO THESE TERMS AND CONDITIONS.

AVIS DE CONFIDENTIALITÉ ET DE PROPRIÉTÉ INTELLECTUELLE
L'INFORMATION CONTENUE DANS CE DOCUMENT EST LA PROPRIÉTÉ EXCLUSIVE DE VEOLIA WATER TECHNOLOGIES CANADA INC. ET CONTIENT DES RENSEIGNEMENTS CONFIDENTIELS ET EXCLUSIFS AINSI QUE D'AUTRES LOIS SUR LA PROPRIÉTÉ INTELLECTUELLE. LES IDÉES ET CONCEPTS ET RENSEIGNEMENTS CONTENUS DANS CE DOCUMENT SONT CONFIDENTIELS ET SONT SOUMIS EN CONFIDENCE. CE DOCUMENT ET LES RENSEIGNEMENTS QU'IL CONTIENT DOIVENT ÊTRE UTILISÉS UNIQUEMENT AUX FINS POUR LESQUELLES CE DOCUMENT EST EXPRESSÉMENT SOUMIS ET AUCUNE LICENCE IMPLICITE N'EST OCTROYÉE DE PAR LA SOUMISSION DE CE DOCUMENT. CE DOCUMENT CONTIENT DES RENSEIGNEMENTS CONFIDENTIELS ET PRIVILÉGIÉS QUI SONT LA PROPRIÉTÉ DE V.W.T. ET NE DOIVENT PAS ÊTRE DIVULGUÉS, REPRODUITS, PRÊTÉS, VENDUS OU UTILISÉS EN TOUTE OU EN PARTIE À QUELQUE FIN QUE CE SOIT SANS LE CONSENTEMENT ÉCRIT DE V.W.T. V.W.T. DÉCLINE TOUTE RESPONSABILITÉ ET TOUTE RESPONSABILITÉ QUANT À L'UTILISATION DE CE DOCUMENT OU DES IDÉES ET CONCEPTS QUI Y SONT CONTENUS À DES FINS AUTRES QUE CELLES SPÉCIFIQUES À CE PROJET. EN AUCUN CAS CE DOCUMENT OU LES IDÉES ET CONCEPTS QUI Y SONT CONTENUS NE DOIVENT ÊTRE UTILISÉS PAR QUICONQUE À QUELQUE FIN QUE CE SOIT AUTRE QUE CELLE POUR LAQUELLE CE DOCUMENT A ÉTÉ SOUMIS SANS LE CONSENTEMENT ÉCRIT DE V.W.T. TOUS DROITS D'AUTEUR, BREVET ET AUTRES DROITS DE PROPRIÉTÉ INTELLECTUELLE SONT RÉSERVÉS. L'ACCEPTATION DE LA LIVRAISON DE CE DOCUMENT CONSTITUE UNE ENTENTE À CES CONDITIONS ET MODALITÉS.

| | | |
|---|---|---|
| DESSINÉ DESIGNER | M.JACQUES | DATE 2019-02-12 |
| VÉRIFIÉ CHECKER | S.DUQUET | DATE 2019-02-12 |
| INGÉNIEUR ENGINEER | | DATE |
| ÉCHELLE/SCALE: | | |

TITRE/TITLE: HYDRAPOL 250 CONTROL PANEL
DRAWING LIST & LEGEND

CLIENT: IQALUIT WWTP

VEOLIA

VEOLIA WATER TECHNOLOGIES CANADA INC. 4105 Sartelon, Saint-Laurent, Qc, Canada. Tel: (514) 334-7230

| PROJET/PROJECT | DESSIN/DRAWING No | INTERNE/INTERNAL | FEUILLET/SHEET | REV. |
|---|---|---|---|---|
| 5000218036-EPL-0006-AUT-VWT | JOME01 | 2 DE 5 | | 4 |

STD: "D" 22x34 | EBI ELECTRIC - 58011-P01 | BAR = 1" À L'ÉCHELLE D'IMPRESSION/BAR = 1" AT PLOT SCALE

Mardi 07 mai 2019, 14:49:00 C:\Users\mjacques\Desktop\CAM\TO-DO_WVTC\5000218036-EPL-0006-AUT-VWT-02.dwg

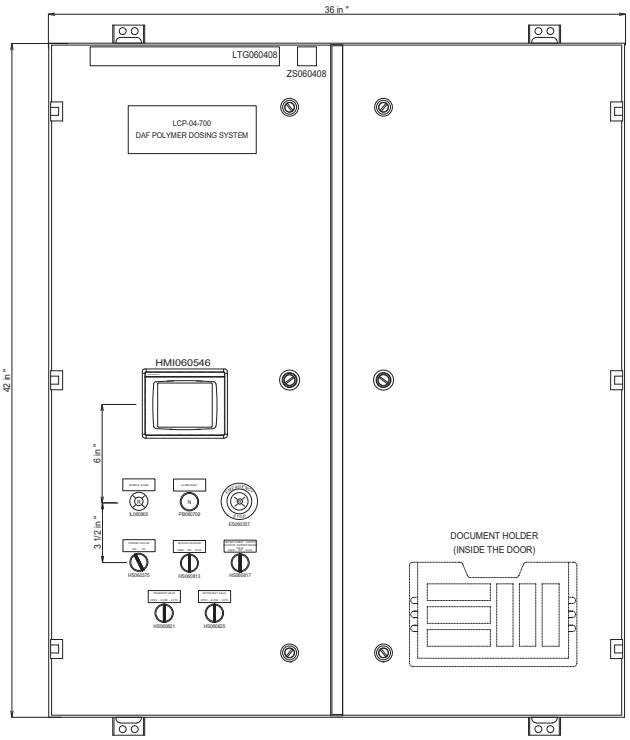


ENCLOSURE 42" x 36" x 12"

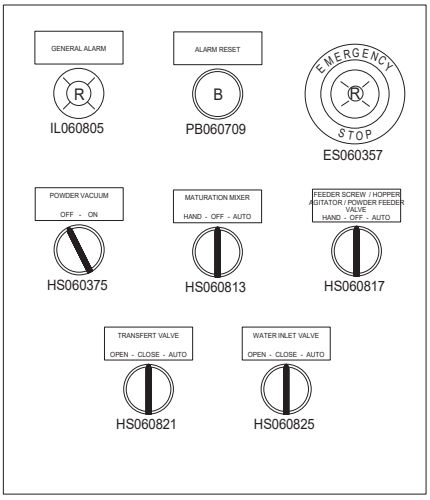


DOOR DETAILS

LR 60892

STD: "D" 22x34 | EBI ELECTRIC - 58011-P01 | BAR = 1" À L'ÉCHELLE D'IMPRESSION/BAR = 1" AT PLOT SCALE

| REV. | DESCRIPTION | DATE | REV. | VER/CHK | APPR. | ECN |
|---|---|---|---|---|---|---|
| 4 | AS COMMISSIONNING | 2019-05-17 | SD | | | |
| 3 | AS BUILT | 2019-05-06 | SD | | | |
| 2 | FOR FAB | 2019-04-02 | RM | | | |
| 1 | FOR APPROVAL | 2019-03-18 | RM | | | |

CONFIDENTIALITY AND INTELLECTUAL PROPERTY NOTICE
ALL INFORMATION CONTAINED IN THIS DOCUMENT IS THE SOLE PROPERTY OF VEOLIA WATER TECHNOLOGIES CANADA INC. AND IS SUBJECT TO COPYRIGHT, TRADE SECRET AND OTHER INTELLECTUAL PROPERTY LAWS. THE DESIGN CONCEPTS AND INFORMATION CONTAINED HEREIN ARE PROPRIETARY TO V.E.W.T. AND ARE SUBMITTED IN CONFIDENCE. THIS DOCUMENT MUST NOT BE USED ONLY FOR THE PURPOSE FOR WHICH THE DOCUMENT IS BEIN SUBMITTED. WHEN NO SUPPLIER'S LICENCE IS GRANTED THIS DOCUMENT MUST NOT BE COPIED, REPRODUCED, LOANED, RESTRICTED OR DISCLOSED, AND PRESERVED INFORMATION OF V.E.W.T. AND THEY MUST NOT BE DISCLOSED, REPRODUCED, LOANED, RESTRICTED OR USED IN ANY WAY WHATSOEVER WITHOUT THE PRIOR WRITTEN CONSENT OF V.E.W.T. V.E.W.T. DISCLAIMS RESPONSIBILITY OR LIABILITY FOR THE USE OF THIS DOCUMENT OR THIS DESIGN CONCEPTS AND INFORMATION CONTAINED HEREIN FOR PURPOSES OTHER THAN THOSE FOR WHICH IT IS INTENDED, OR OTHER THAN THOSE AGREED TO BY V.E.W.T. ALL RIGHTS SHALL THIS DOCUMENT OR THE DESIGN CONCEPTS AND INFORMATION CONTAINED HEREIN BE RESERVED. ACCEPTANCE OF THE DELIVERY OF THIS DOCUMENT CONSTITUTES AGREEMENT TO THESE TERMS AND CONDITIONS.

AVIS DE CONFIDENTIALITÉ ET DE PROPRIÉTÉ INTELLECTUELLE
L'INFORMATION CONTENUE DANS CE DOCUMENT EST LA PROPRIÉTÉ EXCLUSIVE DE VEOLIA WATER TECHNOLOGIES CANADA INC. ET EST SOUMISE AU DROIT D'AUTEUR, AU SECRET DE FABRICATION ET À TOUT AUTRE DROIT DE PROPRIÉTÉ INTELLECTUELLE. LES IDÉES CONCEPTUELLES CONTENUES DANS CE DOCUMENT SONT LA PROPRIÉTÉ DE V.E.W.T. ET SONT SOUMISES EN CONFIDENCE. CE DOCUMENT DOIT ÊTRE UTILISÉ UNIQUEMENT AUX FINS POUR LESQUELLES IL EST SOUMIS. LORSQUE AUCUNE AUTORISATION DE LICENCE N'EST ACCORDÉE, CE DOCUMENT NE DOIT PAS ÊTRE COPIÉ, REPRODUIT, PRÊTÉ, RESTREINT OU UTILISÉ DE QUELQUE MANIÈRE QUE CE SOIT SANS LE CONSENTEMENT PRÉALABLE ÉCRIT DE V.E.W.T. LA PRÉSENTE DOCUMENTATION DE V.E.W.T. ET LES DONNÉES DOIVENT ÊTRE PRÉSERVÉES. V.E.W.T. DÉCLINE TOUTE RESPONSABILITÉ ET LIABILITÉ POUR L'USAGE DE CE DOCUMENT OU DES CONCEPTS ET INFORMATIONS CONTENUES DANS CE DOCUMENT À DES FINS AUTRES QUE CELLES POUR LESQUELLES IL EST PRÉVU OU AUTRES QUE CELLES CONVENUES AVEC LUI. LES DROITS SUR CE DOCUMENT OU SUR LES DESIGNS CONCEPTS ET INFORMATIONS CONTENUES DANS CE DOCUMENT SERONT RÉSERVÉS. L'ACCEPTATION DE LA LIVRAISON DE CE DOCUMENT CONSTITUE UNE ENTENTE À CES TERMES ET CONDITIONS.

| | | | |
|---|---|---|---|
| DESSINÉ DESIGNER | M.JACQUES | DATE | 2019-02-12 |
| VÉRIFIÉ CHECKER | S.DUQUET | DATE | 2019-02-12 |
| INGÉNIEUR ENGINEER | | DATE | |
| ÉCHELLE/SCALE: | | | |

TITRE TITLE: HYDRAPOL 250 CONTROL PANEL OUTSIDE PANEL LAYOUT

CLIENT: IQALUIT WWTP

VEOLIA

VEOLIA WATER TECHNOLOGIES CANADA INC. 4105 Sartelon, Saint-Laurent, Qc, Canada. Tel: (514) 334-7230

| PROJET/PROJECT | DESSINATEUR/DRAWING No | INTERNE/INTERNAL | FEUILLE/SHEET | REV. |
|---|---|---|---|---|
| 5000218036-EPL-0006-AUT-VWT | JOME01 | 3 DE 5 | | 4 |

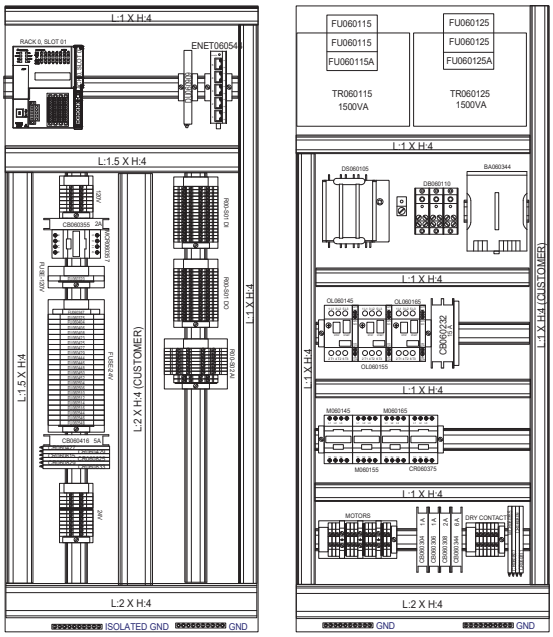
L:1 X H:4
RACK 0, SLOT 01
ENET060540
L:1.5 X H:4
CB060355 2A
CB060416 5A
L:2 X H:4 (CUSTOMER)
L:1 X H:4
L:2 X H:4
ISOLATED GND
GND
FU060115
FU060115
FU060115A
TR060115
1500VA
FU060125
FU060125
FU060125A
TR060125
1500VA
DS060105
DB060110
BA060344
OL060145
OL060165
OL060155
CB060232
M060145
M060165
M060155
CR060375
MOTORS
DRY CONTACTS
CB060134
CB060135
CB060136
CB060137
CB060138
CB060139
CB060140
CB060141
CB060142
CB060143
CB060144
CB060145
CB060146
CB060147
CB060148
CB060149
CB060150
CB060151
CB060152
CB060153
CB060154
CB060155
CB060156
CB060157
CB060158
CB060159
CB060160
CB060161
CB060162
CB060163
CB060164
CB060165
CB060166
CB060167
CB060168
CB060169
CB060170
CB060171
CB060172
CB060173

| Items | Qty | Part Number | Description | Manufacturer |
|---|---|---|---|---|
| ENCLOSURE | 1 | !SP1404283 | Special Enclosure 42" x 36" x 12" | Hammond |
| ENCLOSURE | 1 | BOIHAMPKT99 | Document Holder | Hammond |
| LTG060408 | 1 | !RABUC-LED300-NW | LED Bar 300mm, 3 watts, 24 vdc (88861) | RAB |
| ZS060408 | 1 | BOIHAMFDS1 | Door Switch for Light | Hammond |
| DS060105 | 1 | !TELGS1DU3 | Fused Disconnect Switch 30A/600V (Fus. Type J | Schneider Electric |
| DS060105 | 1 | !TELGS2AE8 | Operating Shaft 30a 12.6" | Schneider Electric |
| DS060105 | 1 | !TELGS2AH420 | Operating Handle Red / Yellow NEMA 4-4X | Schneider |
| DS060105 | 3 | FUSAJT15 | Fuse 15 amp.Type J Time Delay | Mersen |
| DB060110 | 3 | KCONMPDBC6263 | Protective Cover for Distribution Block | Mersen |
| DB060110 | 1 | KCONMPDB63133 | Distribution Block | Mersen |
| OL060145 | 1 | TELGV2ME05 | Manual Starter 0,63-1A | Schneider Electric |
| OL060145 | 1 | TELGVAN20 | Aux Contact for GV2, GV3P, 2NO | Schneider Electric |
| M060145 | 1 | TELLC1D09BD | Contactor 7,5HP/600V 1NO-1NC 24VDC | Schneider Electric |
| M060145 | 1 | KTELLADN20 | Aux Contact 2NO | Schneider Electric |
| OL060155 | 1 | TELGV2ME05 | Manual Starter 0,63-1A | Schneider Electric |
| OL060155 | 1 | TELGVAN20 | Aux Contact for GV2, GV3P, 2NO | Schneider Electric |
| M060155 | 1 | TELLC1D09BD | Contactor 7,5HP/600V 1NO-1NF 24VDC | Schneider Electric |
| M060155 | 1 | KTELLADN20 | Aux Contact 2NO | Schneider Electric |
| OL060165 | 1 | TELGV2ME06 | Manual Starter 1-1,6A | Schneider Electric |
| OL060165 | 1 | TELGVAN20 | Aux Contact forGV2, GV3P, 2NO | Schneider Electric |
| M060165 | 1 | TELLC1D09BD | Contactor 7,5HP/600V 1NO-1NF 24VDC | Schneider Electric |
| M060165 | 1 | KTELLADN20 | Aux Contact 2NO | Schneider Electric |
| CB060232 | 1 | !SU202M-C15 | Breaker 15A 2 poles | ABB |
| CR060375 | 1 | TELLC1D09BD | Contactor 7,5HP/600V 1NO-1NF 24VDC | Schneider Electric |
| TR060115 | 1 | !TRASQD9070FB3B | Fuse Holder for XFO (Primairy + Secondairy) | Schneider Electric |
| FU060115 | 2 | FUSATQR5 | Fuse 5 amp, CC, 600 v, Time Delay | Mersen |
| FU060115A | 1 | FUSATDR15 | Fuse 15 amp, CC, 600 v, Time Delay | Mersen |
| TR060115 | 1 | KSQD9070FSC2 | Protective Cover for Transformer | Schneider Electric |
| TR060115 | 3 | !SPL0001T | Protective Cover for Fuse Holder | Littelfuse |
| TR060115 | 1 | TRASQD9070T1500D5 | Transformer 1500 va 600/120 v. | Schneider Electric |
| TR060125 | 1 | !TRASQD9070FB3B | Fuse Holder for XFO (Primairy + Secondairy) | Schneider Electric |
| FU060125 | 2 | FUSATQR5 | Fuse 5 amp, CC, 600 v, Time Delay | Mersen |
| TR060125 | 1 | KSQD9070FSC2 | Protective Cover for Transformer | Schneider Electric |
| TR060125 | 3 | !SPL0001T | Protective Cover for Fuse Holder | Littelfuse |
| TR060125 | 1 | !TRASQD9070T1500D37 | Transformer 1500 va 600/120-240v v. | Schneider Electric |
| FU060125A | 1 | FUSATDR15 | Fuse 15 amp, CC, 600 v, Time Delay | Mersen |
| BA060344 | 1 | OMRS8VK-G48024 | Power Supply 24 vcc 20 amp. | Omron |
| RELAYS | 10 | OMRG2RV-SL700 DC24 | Control Relay 6 mm, 6 amp, 24 vdc | Omron |
| RELAYS | 1 | KOMRP2RVM-200B | Connecting Bar 20 poles for G2RV | Omron |
| CR060821 | 1 | OMRG2R-1-SN-DC24 (S) | Relais 1 pôle 24 vca c/a témoin | Omron |
| CR060821 | 1 | OMRP2RF-05-E | Base de relais type G2R-1 | Omron |
| MCR060357 | 1 | TELCAD50BD | Relay 10A 5NO 24VCC | Schneider Electric |
| HMI060546 | 1 | 2711P-T4W21D8S | PanelView Plus 7 4.3" | Allen-Bradley |

| | | | | |
|---|---|---|---|---|
| PLC | 1 | 1769-L16ER-BB1B | PLC | Allen-Bradley |
| PLC | 1 | 1734-IE8C | Analog Input Card | Allen-Bradley |
| PLC | 1 | 1734-TB | Point I/O terminal base | Allen-Bradley |
| DU060909 | 1 | 7920400000 | Duplicateur signal 4-20mA | Weidmuller |
| ENET060544 | 1 | TELTCSESU053FN0 | Ethernet Switch 5 ports | Schneider Electric |
| HS060375 | 1 | KTELZB4BD2 | Selector 2 Position Maintained | Schneider Electric |
| HS060375 | 1 | KTELZB4BZ101 | Contact Block 1NO | Schneider Electric |
| HS060813 | 4 | KTELZB4BD3 | Selector 3 Position Maintained | Schneider Electric |
| HS060813 | 4 | KTELZB4BZ103 | Contact Block 2NO | Schneider Electric |
| HS060813 | 4 | KTELZBE101 | Contact Block 1NO | Schneider Electric |
| IL060805 | 1 | KTELZB4BV043 | Pilot Light Red (LED) | Schneider Electric |
| IL060805 | 1 | TELZB4BVB4 | Mounting Block with Light, LED 24V Red | Schneider Electric |
| ES060357 | 1 | TELZB4BW643 | Red Lit Mushroom Button | Schneider Electric |
| ES060357 | 1 | TELZB4BVB4 | Mounting Block with Light, LED 24V Red | Schneider Electric |
| ES060357 | 1 | KTELZBE101 | Contact Block 1NO | Schneider Electric |
| ES060357 | 1 | KTELZBE102 | Contact Block 1NC | Schneider Electric |
| ES060357 | 1 | KTELZBY9320 | Round EMERGENCY STOP Label | Schneider Electric |
| PB060709 | 1 | KTELZB4BA2 | Black Flush Button | Schneider Electric |
| PB060709 | 1 | KTELZB4BZ101 | Contact Block 1NO | Schneider Electric |
| GND | 3 | KN8020A108T | Grounding Bar 10 Holes | Ilsco |
| TERMINAL BLOCKS | 37 | ENT1SNK506010R0000 | Terminal Block 30 amp. 6mm | ABB |
| TERMINAL BLOCKS | 5 | ENT1SNK505910R0000 | End Cover | ABB |
| TERMINAL BLOCKS | 32 | ENT1SNK505210R0000 | Terminal Block 2 Levels 5 mm | ABB |
| TERMINAL BLOCKS | 2 | ENT1SNK505960R0000 | End Cover | ABB |
| TERMINAL BLOCKS | 8 | ENT1SNK505212R0000 | Terminal Block 3 Levels | ABB |
| TERMINAL BLOCKS | 1 | ENT1SNK505961R0000 | End Cover | ABB |
| FUSE | 1 | ENT1SNK508418R0000 | Fuse Holder 1/4" x 1 1/4" | ABB |
| FUSE | 23 | ENT1SNK508425R0000 | Fuse Terminal Block 2 Level | ABB |
| FUSE | 1 | ENT1SNK508911R0000 | End Cover | ABB |
| FUSE | 24 | KFUSGMA2 | Fuse 250 v. 2 amp. M5 x 20 | Bussmann |
| FUSE | 4 | FUSGMA5 | Fuse 125 v. 5 amp. M5 x 20 | Bussmann |
| FUSE | 5 | KFUSGMA1 | Fuse 250 v. 1 amp. M5 x 20 | Bussmann |
| FUSE | 4 | FUSGMA3 | Fuse 250 v. 3 amp. M5 x 20 | Bussmann |
| FUSE | 5 | FUSABC20 | Fuse 250 v. 20 amp. 1/4 x 1 1/4 | Bussmann |
| TERMINAL BLOCKS | 14 | ENT1SNK900002R0000 | End Stop | ABB |
| CB060304, CB060306 | 2 | !SU201M-C1 | Breaker 1A | ABB |
| CB060308, CB060355 | 2 | !SU201M-C2 | Breaker 2A | ABB |
| CB060416 | 1 | !SU201M-C5 | Breaker 5A | ABB |
| CB060344 | 1 | !SU201M-C6 | Breaker 6A | ABB |
| PATCH CORD | 1 | !CAT5ES-06GN | Ethernet Cable RJ45, 6 ft, Green | Infinite cables |

LR 60892

| REV. | DESCRIPTION | DATE | REV. | VERIÇHK | APPR | ECN |
|---|---|---|---|---|---|---|
| 4 | AS COMMISSIONNING | 2019-05-17 | SD | | | |
| 3 | AS BUILT | 2019-05-06 | SD | | | |
| 2 | FOR FAB | 2019-04-02 | RM | | | |
| 1 | FOR APPROVAL | 2019-03-18 | RM | | | |

CONFIDENTIALITY AND INTELLECTUAL PROPERTY NOTICE
ALL INFORMATION CONTAINED IN THIS DOCUMENT IS THE SOLE PROPERTY OF VEOLIA WATER TECHNOLOGIES CANADA INC. AND CONTAINS CONFIDENTIAL AND PROPRIETARY INFORMATION AND OTHER INTELLECTUAL PROPERTY LAWS. THE DESIGN CONCEPTS AND INFORMATION CONTAINED HEREIN ARE PROPRIETARY TO V.W.T. AND ARE SUBMITTED IN CONFIDENCE. THIS DOCUMENT AND ITS CONTENTS MUST BE USED ONLY FOR THE PURPOSE FOR WHICH THE DOCUMENT IS EXPRESSLY SUBMITTED AND NO IMPLICIT LICENCE IS GRANTED FOR ITS USE FOR ANY OTHER PURPOSE. THIS DOCUMENT IS STRICTLY CONFIDENTIAL AND PRI VILEGED INFORMATION OF V.W.T. AND THEY MUST NOT BE DISCLOSED, REPRODUCED, LOANED, WHETTED OR USED IN WHOLE OR IN PART FOR ANY PURPOSE WITHOUT THE PRIOR WRITTEN CONSENT OF V.W.T. V.W.T. ASSUMES NO RESPONSIBILITY OR LIABILITY FOR THE USE OF THIS DOCUMENT OR THE DESIGN CONCEPTS AND INFORMATION CONTAINED HEREIN FOR PURPOSES OTHER THAN THE SPECIFIC PROJECT RELATED TO THE ITEMS OR PURPOSES OF THIS DOCUMENT. IN NO EVENT SHALL THIS DOCUMENT OR THE DESIGN CONCEPTS AND INFORMATION CONTAINED HEREIN BE USED FOR ANY PROJECT OTHER THAN THE ONE SPECIFIC TO THIS DOCUMENT. ALL COPYRIGHT, PATENT AND OTHER INTELLECTUAL PROPERTY RIGHTS ARE RESERVED. ACCEPTANCE OF THE DELIVERY OF THIS DOCUMENT CONSTITUTES AGREEMENT TO THESE TERMS AND CONDITIONS.

AVIS DE CONFIDENTIALITÉ ET DE PROPRIÉTÉ INTELLECTUELLE
LES RENSEIGNEMENTS CONTENUS DANS CE DOCUMENT SONT LA PROPRIÉTÉ EXCLUSIVE DE VEOLIA WATER TECHNOLOGIES CANADA INC. ET CONTIENNENT DES RENSEIGNEMENTS CONFIDENTIELS ET PROPRIÉTAIRES AINSI QUE D'AUTRES LOIS SUR LA PROPRIÉTÉ INTELLECTUELLE. LES IDÉES ET CONCEPTS Y INTERVENANT CONSTITUENT LA PROPRIÉTÉ EXCLUSIVE DE V.V.T. ET SONT SOUMIS EN CONFIDENCE. LA DIVULGATION, LA REPRODUCTION, LE PRÊT OU L'UTILISATION DE TOUT OU PARTIE DU PRÉSENT DOCUMENT À QUELQUE FIN QUE CE SOIT, AUTRE QUE CELLE POUR LAQUELLE IL EST EXPRESSÉMENT SOUMIS ET POUR LAQUELLE AUCUNE LICENCE IMPLICITE N'EST ACCORDÉE, DOIT FAIRE L'OBJET D'UNE AUTORISATION PRÉALABLE ÉCRITE DE V.V.T. V.V.T. N'ASSUME AUCUNE RESPONSABILITÉ OU OBLIGATION POUR L'UTILISATION DU PRÉSENT DOCUMENT OU DES IDÉES ET CONCEPTS QU'IL CONTIENT POUR DES FINS AUTRES QUE CELLES SPÉCIFIQUES AU PROJET VISÉ PAR LE PRÉSENT DOCUMENT. EN AUCUN CAS LE PRÉSENT DOCUMENT NI LES IDÉES ET CONCEPTS QU'IL CONTIENT NE DOIVENT ÊTRE UTILISÉS POUR UN AUTRE PROJET QUE CELUI VISÉ PAR LE PRÉSENT DOCUMENT. TOUS LES DROITS D'AUTEUR, BREVETS ET AUTRES DROITS DE PROPRIÉTÉ INTELLECTUELLE SONT RÉSERVÉS. L'ACCEPTATION DE LA LIVRAISON DE CE DOCUMENT IMPLIQUE L'ACCEPTATION DE CES CONDITIONS.

| | | |
|---|---|---|
| DESSINÉ DESIGNER | M.JACQUES | DATE 2019-02-12 |
| VÉRIFIÉ CHECKER | S.DUQUET | DATE 2019-02-12 |
| INGÉNIEUR ENGINEER | | DATE |
| ÉCHELLE/SCALE: | | |

TITRE/TITLE: HYDRAPOL 250 CONTROL PANEL PARTS LIST

CLIENT: IQALUIT WWTP

VEOLIA

VEOLIA WATER TECHNOLOGIES CANADA INC. 4105 Sartelon, Saint-Laurent, Qc, Canada. Tel: (514) 334-7230

| PROJET/PROJECT | DESSIN/DRAWING No | INTERNE/INTERNAL | FEUILLET/SHEET | REV. |
|---|---|---|---|---|
| 5000218036-EPL-0006-AUT-VWT | JOME01 | 5 DE 5 | | 4 |

STD: "D" 22x34 | EBI ELECTRIC - 58011-P01 | BAR = 1" À L'ÉCHELLE D'IMPRESSION/BAR = 1" AT PLOT SCALE

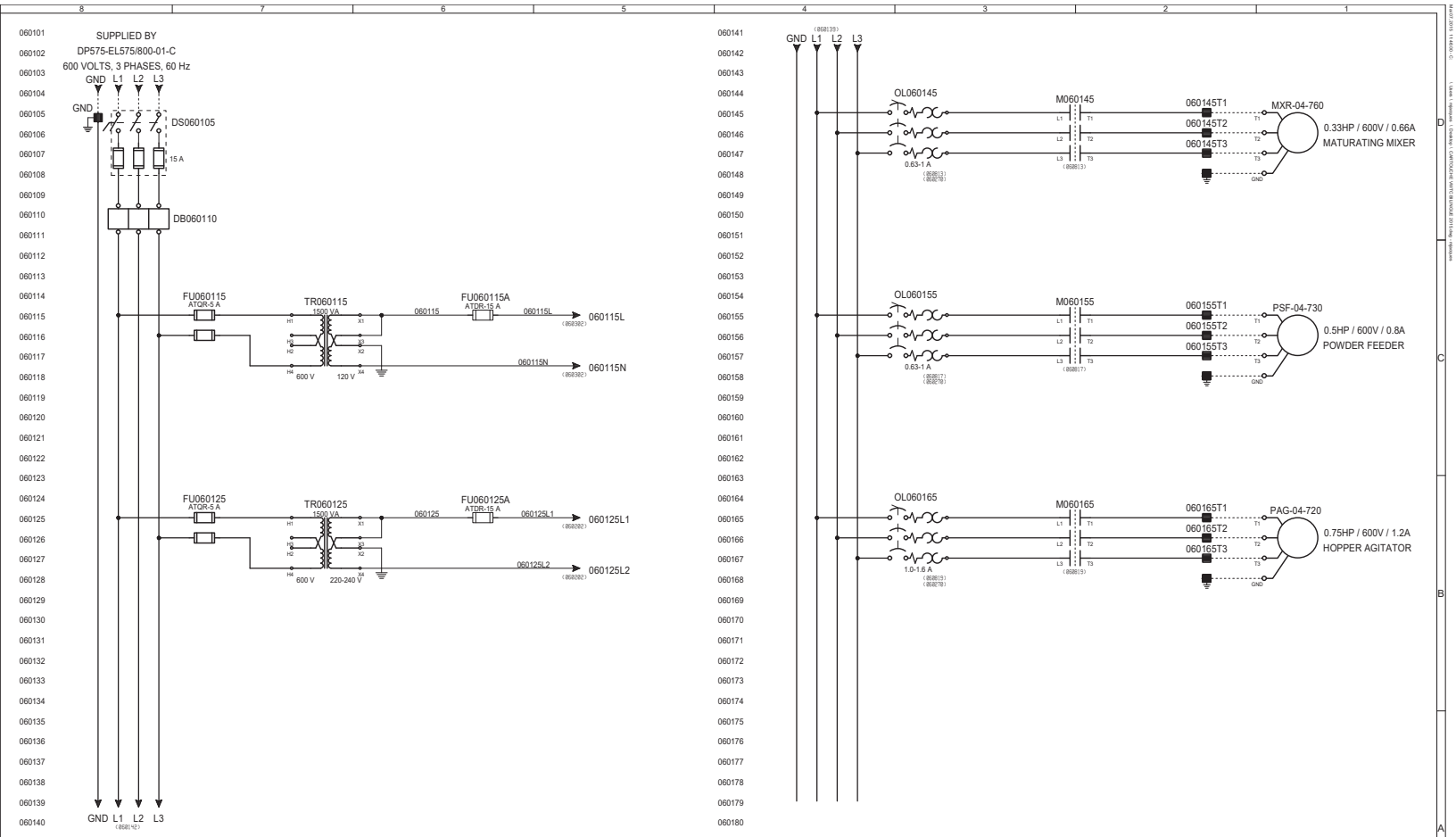


| | | | | | | | |
|---|---|---|---|---|---|---|---|
| 4 | AS COMMISSIONNING | 2019-05-17 | SD | | | | |
| 3 | AS BUILT | 2019-05-06 | SD | | | | |
| 2 | FOR FAB | 2019-04-02 | RM | | | | |
| 1 | FOR APPROVAL | 2019-03-18 | RM | | | | |
| | | | | | | | |
| | | | | | | | |
| REV. | DESCRIPTION | DATE | REV. | VERIFIÉ/CHK | APPR. | ECN | |

CONFIDENTIALITY AND INTELLECTUAL PROPERTY NOTICE
ALL INFORMATION CONTAINED IN THIS DOCUMENT IS THE SOLE PROPERTY OF VEOLIA WATER TECHNOLOGIES CANADA INC. AND CONTAINS CONFIDENTIAL AND PROPRIETARY INFORMATION AND OTHER INTELLECTUAL PROPERTY LAWS. THE DESIGN CONCEPTS AND INFORMATION CONTAINED HEREIN ARE PROPRIETARY TO "I.D.C." AND ARE SUBMITTED IN CONFIDENCE. NEITHER THIS DOCUMENT NOR THE INFORMATION IT SUBMITTED SHALL BE USED ONLY FOR THE PURPOSE FOR WHICH THE DOCUMENT IS EXPRESSLY SUBMITTED AND NO IMPLICIT LICENCE IS GRANTED TO ANY OTHER USE OF THE INFORMATION. THIS DOCUMENT CONTAINS CONFIDENTIAL AND PRIVILEGED INFORMATION OF V.W.T. AND THEY MUST NOT BE DISCLOSED, REPRODUCED, LOANED, WHETTED OR USED IN WHOLE OR IN PART FOR ANY PURPOSE EXCEPT WITH THE WRITTEN PERMIT OF V.W.T. V.W.T. ASSUMES NO RESPONSIBILITY OR LIABILITY FOR THE USE OF THIS DOCUMENT OR THE DESIGN CONCEPTS AND INFORMATION CONTAINED HEREIN FOR PURPOSES OTHER THAN THE SPECIFIC PROJECT RELATED TO THE OTHERWISE PURPOSE OF THIS DOCUMENT. IN NO EVENT SHALL THIS DOCUMENT OR THE DESIGN CONCEPTS AND INFORMATION CONTAINED HEREIN BE CONSTRUED AS RELATING TO ANY MATTER OTHER THAN THE SPECIFIC PROJECT. ALL COPYRIGHT, PATENT AND OTHER INTELLECTUAL PROPERTY RIGHTS ARE RESERVED. ACCEPTANCE OF THE DELIVERY OF THIS DOCUMENT CONSTITUTES AGREEMENT TO THESE TERMS AND CONDITIONS.

AVIS DE CONFIDENTIALITÉ ET DE PROPRIÉTÉ INTELLECTUELLE
L'INFORMATION CONTENUE DANS CE DOCUMENT EST LA PROPRIÉTÉ EXCLUSIVE DE VEOLIA WATER TECHNOLOGIES CANADA INC. ET CONTIENT DES LOIS SUR LA PROPRIÉTÉ INTELLECTUELLE ET AUTRES LOIS. LES DESIGNS, CONCEPTS ET INFORMATIONS CONTENUS DANS CE DOCUMENT SONT CONFIDENTIELS ET SONT SOUMIS EN CONFIDENCE. CE DOCUMENT ET LES INFORMATIONS QUI Y SONT SOUMISES NE DOIVENT ÊTRE UTILISÉS UNIQUEMENT AUX FINS POUR LESQUELLES CE DOCUMENT EST EXPRESSÉMENT SOUMIS ET AUCUNE LICENCE IMPLICITE N'EST OCTROYÉE DE TOUTE AUTRE UTILISATION DE L'INFORMATION. V.W.T. N'ASSUME AUCUNE RESPONSABILITÉ OU OBLIGATION POUR L'UTILISATION DE CE DOCUMENT OU DES CONCEPTS ET INFORMATIONS QUI Y SONT CONTENUS POUR DES FINS AUTRES QUE CELLES SPÉCIFIQUES AU PROJET RELATIF À L'OBJET PRÉVU DE CE DOCUMENT. CE DOCUMENT OU LES CONCEPTS ET L'INFORMATION QUI Y SONT CONTENUS NE DOIVENT EN AUCUN CAS ÊTRE INTERPRÉTÉS COMME SE RAPPORTANT À UN AUTRE PROJET. TOUS LES DROITS D'AUTEUR, BREVET ET AUTRES DROITS DE PROPRIÉTÉ INTELLECTUELLE SONT RÉSERVÉS. L'ACCEPTATION DE LA LIVRAISON DE CE DOCUMENT IMPLIQUE L'ACCEPTATION DE CES TERMES ET CONDITIONS.

| | |
|---|---|
| DESSINÉ/DESIGNER | M.JACQUES |
| DATE | 2019-02-12 |
| VÉRIFIÉ/CHECKER | S.DUQUET |
| DATE | 2019-02-12 |
| INGÉNIEUR/ENGINEER | |
| DATE | |
| ÉCHELLE/SCALE: | |

TITRE/TITLE: HYDRAPOL 250 CONTROL PANEL SCHEMATIC DIAGRAM 600VAC

CLIENT: IQALUIT WWTP

VEOLIA WATER TECHNOLOGIES CANADA INC. 4105 Sartelon, Saint-Laurent, Qc, Canada. Tel: (514) 334-7230

| PROJET/PROJECT | DESSIN/DRAWING No | INTERNE/INTERNAL | FEUILLET/SHEET | REV. |
|---|---|---|---|---|
| 5000218036-ELD-0006-AUT-VWT | JOME01 | 1 DE 9 | | 4 |

LR 60892

STD: "D" 22x34 | EBI ELECTRIC - 58011-P01 | BAR = 1" À L'ÉCHELLE D'IMPRESSION/BAR = 1" AT PLOT SCALE

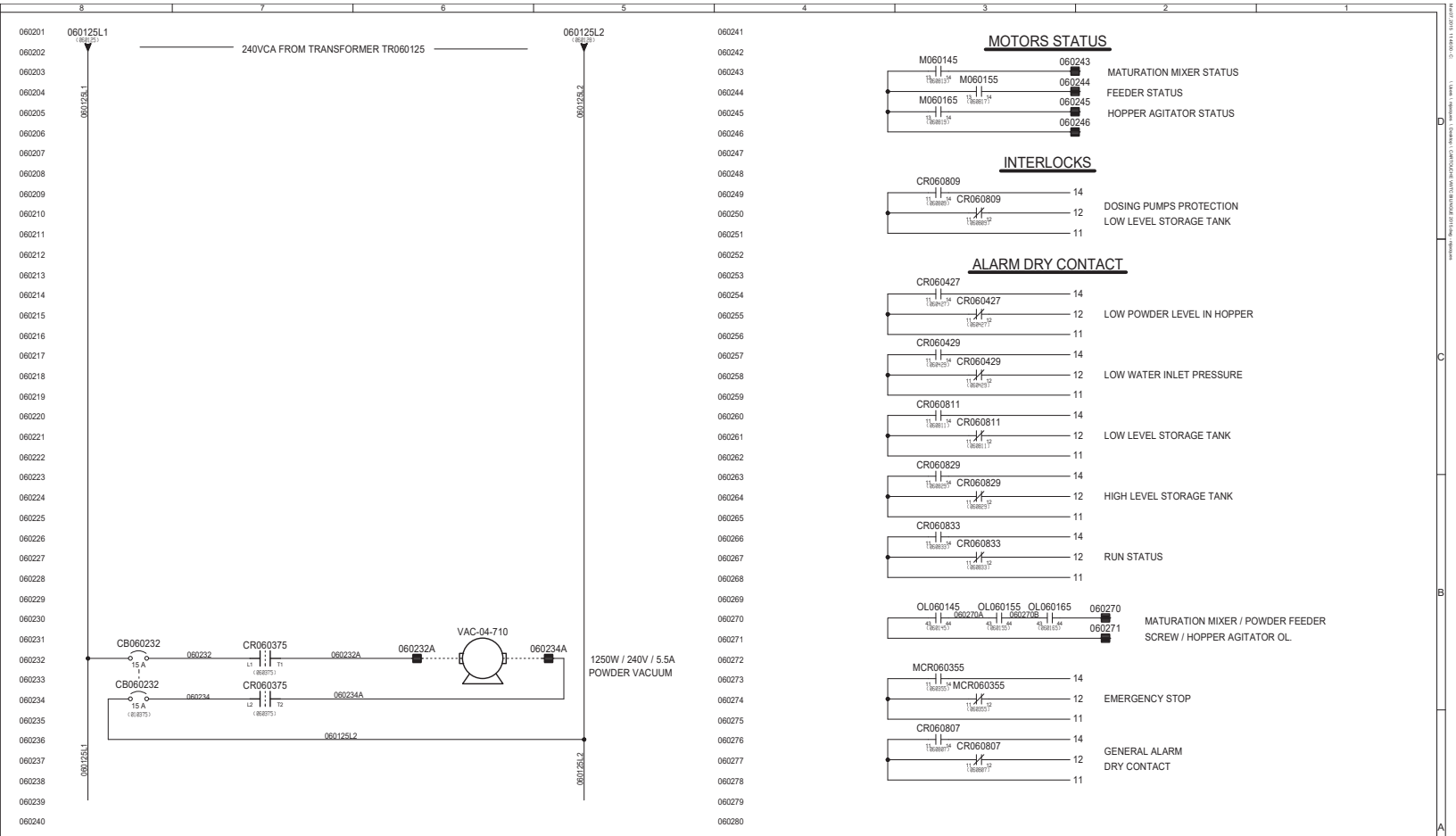


## MOTORS STATUS




MATURATION MIXER STATUS
FEEDER STATUS
HOPPER AGITATOR STATUS

## INTERLOCKS




DOSING PUMPS PROTECTION
LOW LEVEL STORAGE TANK

## ALARM DRY CONTACT




LOW POWDER LEVEL IN HOPPER
LOW WATER INLET PRESSURE
LOW LEVEL STORAGE TANK
HIGH LEVEL STORAGE TANK
RUN STATUS




MATURATION MIXER / POWDER FEEDER SCREW / HOPPER AGITATOR OL.




EMERGENCY STOP




GENERAL ALARM
DRY CONTACT

| | | | | | | | |
|---|---|---|---|---|---|---|---|
| 4 | AS COMMISSIONNING | 2019-05-17 | SD | | | | |
| 3 | AS BUILT | 2019-05-06 | SD | | | | |
| 2 | FOR FAB | 2019-04-02 | RM | | | | |
| 1 | FOR APPROVAL | 2019-03-18 | RM | | | | |
| | | | | | | | |
| | | | | | | | |
| REV. | DESCRIPTION | DATE | REV. | VERIF/CHK | APPR | ECN | |

CONFIDENTIALITY AND INTELLECTUAL PROPERTY NOTICE
ALL INFORMATION CONTAINED IN THIS DOCUMENT IS THE SOLE PROPERTY OF VEOLIA WATER TECHNOLOGIES CANADA INC. AND CONTAINS CONFIDENTIAL AND PROPRIETARY INFORMATION AND OTHER INTELLECTUAL PROPERTY LAWS. THE DESIGN CONCEPTS AND INFORMATION CONTAINED HEREIN ARE PROPRIETARY TO "I.S.T." AND ARE CONFIDENTIAL AND PROTECTED BY COPYRIGHT LAWS. IT MUST NOT BE USED ONLY FOR THE PURPOSE FOR WHICH THE DOCUMENT IS EXPRESSLY SUBMITTED AND NO IMPLICIT LICENCE IS GRANTED TO THE USE OF THIS DOCUMENT OR THE INFORMATION IN IT. THIS IS A CONFIDENTIAL AND PRIVILEGED INFORMATION OF I.S.T. AND THEY MUST NOT BE DISCLOSED, REPRODUCED, LOANED, INSERTED OR USED IN ANY MANNER WHATSOEVER WITHOUT THE EXPRESS WRITTEN PERMIT OF I.S.T. I.S.T. ASSUMES NO RESPONSIBILITY OR LIABILITY FOR THE USE OF THIS DOCUMENT OR THE DESIGN CONCEPTS AND INFORMATION CONTAINED OR EXPRESSED HEREIN IN CONNECTION WITH ANY USE WHICH RELATES TO THE OTHER OUR PURPOSE OF THIS DOCUMENT. IN NO EVENT SHALL THIS DOCUMENT OR THE DESIGN CONCEPTS AND INFORMATION CONTAINED OR EXPRESSED HEREIN BE USED FOR ANY PURPOSE OTHER THAN THE INTENDED OF I.S.T. ALL COPYRIGHT, PATENT AND OTHER INTELLECTUAL PROPERTY RIGHTS ARE RESERVED. ACCEPTANCE OF THE DELIVERY OF THIS DOCUMENT CONSTITUTES AGREEMENT TO THESE TERMS AND CONDITIONS.

AVIS DE CONFIDENTIALITÉ ET DE PROPRIÉTÉ INTELLECTUELLE
L'INFORMATION CONTENUE DANS CE DOCUMENT EST LA PROPRIÉTÉ EXCLUSIVE DE VEOLIA WATER TECHNOLOGIES CANADA INC. ET CONTIENT DES RENSEIGNEMENTS CONFIDENTIELS ET EXCLUSIFS AINSI QUE D'AUTRES LOIS SUR LA PROPRIÉTÉ INTELLECTUELLE. LES IDÉES ET CONCEPTS D'INFORMATION CONTENUS DANS CE DOCUMENT SONT EXPRIMÉES DE SOI-DISANT SECRÈTES ET SONT PROTÉGÉES PAR LES LOIS SUR LE DROIT D'AUTEUR. CE DOCUMENT NE DOIT ÊTRE UTILISÉ QUE DANS LE BUT POUR LEQUEL LE DOCUMENT EST EXPRESSÉMENT SOUMIS ET AUCUNE LICENCE IMPLICITE N'EST OCTROYÉE DE L'UTILISATION DE CE DOCUMENT OU DE L'INFORMATION QUI Y FIGURE. I.S.T. DÉCLINE TOUTE RESPONSABILITÉ OU RESPONSABILITÉ EN CAS D'UTILISATION DE CE DOCUMENT OU DES IDÉES ET CONCEPTS D'INFORMATION CONTENUS OU EXPRIMÉS ICI À DES FINS AUTRES QUE CELLES POUR LESQUELLES CE DOCUMENT A ÉTÉ PRÉPARÉ. EN AUCUN CAS CE DOCUMENT OU LES IDÉES ET CONCEPTS D'INFORMATION QUI Y SONT CONTENUS OU EXPRIMÉS ICI NE DOIVENT ÊTRE UTILISÉS À DES FINS AUTRES QUE CELLES POUR LESQUELLES IL A ÉTÉ PRÉPARÉ. LES DROITS D'AUTEUR, BREVET ET AUTRES DROITS DE PROPRIÉTÉ INTELLECTUELLE SONT RÉSERVÉS. L'ACCEPTATION DE LA LIVRAISON DE CE DOCUMENT CONSTITUE UNE ENTENTE À CES CONDITIONS ET MODALITÉS.

| | | |
|---|---|---|
| DESSINÉ DESIGNER | M.JACQUES | DATE 2019-02-12 |
| VÉRIFIÉ CHECKER | S.DUQUET | DATE 2019-02-12 |
| INGÉNIEUR ENGINEER | | DATE |
| ÉCHELLE/SCALE: | | |

TITRE/TITLE: HYDRAPOL 250 CONTROL PANEL SCHEMATIC DIAGRAM 120VAC

CLIENT: IQALUIT WWTP

VEOLIA

VEOLIA WATER TECHNOLOGIES CANADA INC. 4105 Sartelon, Saint-Laurent, Qc, Canada. Tel: (514) 334-7230

| PROJET/PROJECT | DESSIN/DRAWING No | INTERNE/INTERNAL | FEUILLET/SHEET | REV. |
|---|---|---|---|---|
| 5000218036-ELD-0006-AUT-VWT | JOME01 | 2 DE 9 | | 4 |

LR 60892

STD: "D" 22x34 | EBI ELECTRIC - 58011-P01 | BAR = 1" À L'ÉCHELLE D'IMPRESSION/BAR = 1" AT PLOT SCALE

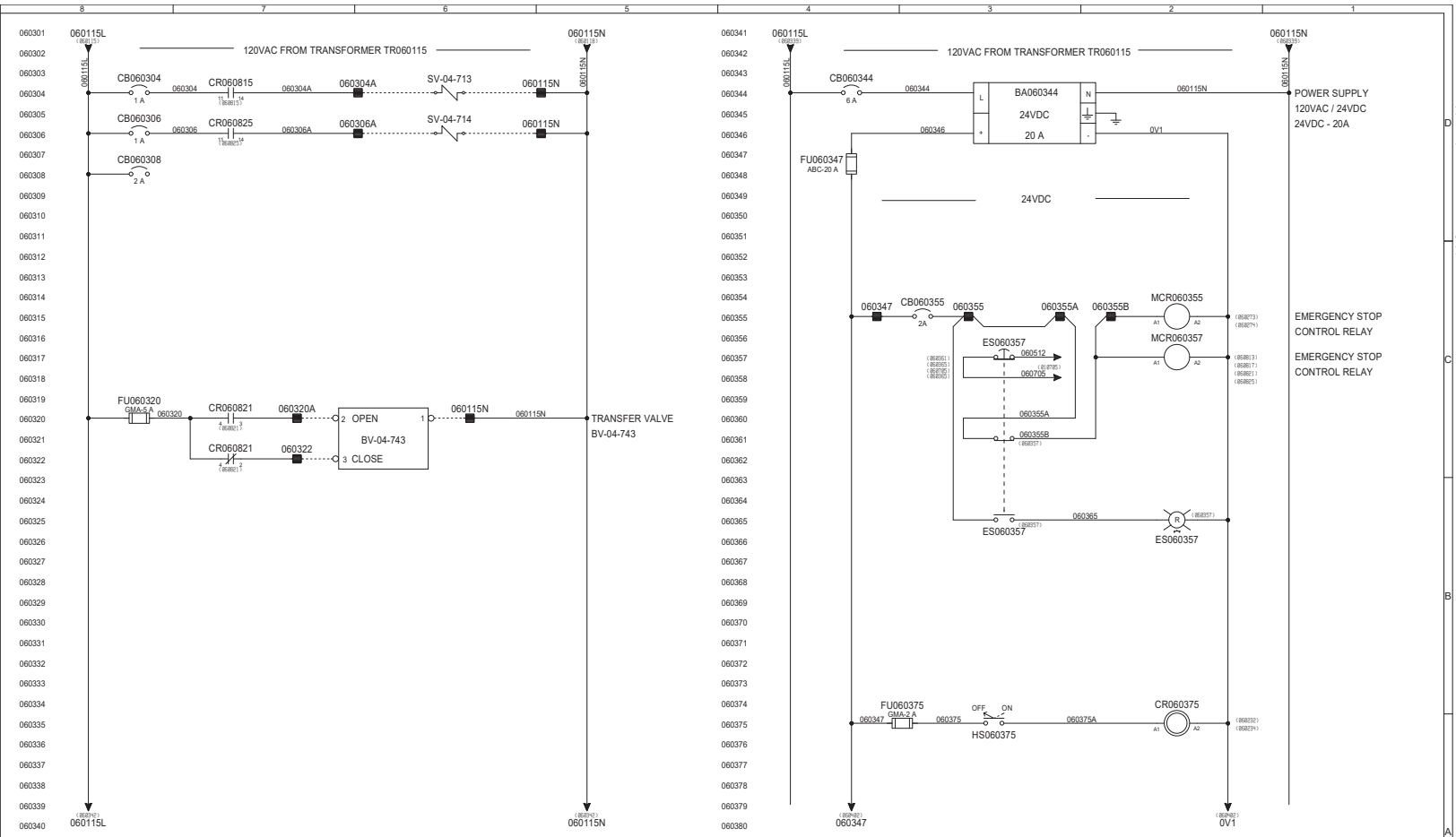


| | | | | | | | |
|---|---|---|---|---|---|---|---|
| 4 | AS COMMISSIONNING | 2019-05-17 | SD | | | | |
| 3 | AS BUILT | 2019-05-06 | SD | | | | |
| 2 | FOR FAB | 2019-04-02 | RM | | | | |
| 1 | FOR APPROVAL | 2019-03-18 | RM | | | | |
| | | | | | | | |
| | | | | | | | |
| REV. | DESCRIPTION | DATE | REV. | VERIC'HK | APPR. | ECN | |

CONFIDENTIALITY AND INTELLECTUAL PROPERTY NOTICE: ALL INFORMATION CONTAINED IN THIS DOCUMENT IS THE SOLE PROPERTY OF VEOLIA WATER TECHNOLOGIES CANADA INC. AND CONTAINS CONFIDENTIAL AND PROPRIETARY INFORMATION AND OTHER INTELLECTUAL PROPERTY LAWS. THE DESIGN CONCEPTS AND INFORMATION CONTAINED HEREIN ARE PROPRIETARY TO V.W.T. AND ARE SUBMITTED IN CONFIDENCE. THIS DOCUMENT AND THE INFORMATION MUST BE USED ONLY FOR THE PURPOSE FOR WHICH THE DOCUMENT IS IS EXPRESSLY SUBMITTED AND NO IMPLICIT LICENCE IS GRANTED BY THE SUBMISSION OF THIS DOCUMENT. THIS DOCUMENT CONTAINS CONFIDENTIAL AND PRIVILEGED INFORMATION OF V.W.T. AND THEY MUST NOT BE DISCLOSED, REPRODUCED, LOANED, WHETTED OR USED IN WHOLE OR IN PART FOR ANY PURPOSE WITHOUT THE EXPRESS WRITTEN CONSENT OF V.W.T. V.W.T. ASSUMES NO RESPONSIBILITY OR LIABILITY FOR THE USE OF THIS DOCUMENT OR THIS DESIGN CONCEPTS AND INFORMATION CONTAINED HEREIN FOR PURPOSES OTHER THAN THE SPECIFIC PROJECT RELATED TO THE OTHER OUR PURPOSE OF THIS DOCUMENT. IN NO EVENT SHALL THIS DOCUMENT OR THE DESIGN CONCEPTS AND INFORMATION CONTAINED HEREIN BE CONSTRUED AS RELATING OR GIVING ANY RIGHT OF LICENT. ALL COPYRIGHT, PATENT AND OTHER INTELLECTUAL PROPERTY RIGHTS ARE RESERVED. ACCEPTANCE OF THE DELIVERY OF THIS DOCUMENT CONSTITUTES AGREEMENT TO THESE TERMS AND CONDITIONS.

AVIS DE CONFIDENTIALITÉ ET DE PROPRIÉTÉ INTELLECTUELLE: L'INFORMATION CONTENUE DANS CE DOCUMENT EST LA PROPRIÉTÉ EXCLUSIVE DE VEOLIA WATER TECHNOLOGIES CANADA INC. ET CONTIENT DES RENSEIGNEMENTS CONFIDENTIELS ET EXCLUSIFS AINSI QUE D'AUTRES LOIS SUR LA PROPRIÉTÉ INTELLECTUELLE. LES IDÉES ET CONCEPTS D'INFORMATION CONTENUS DANS CE DOCUMENT SONT CONFIDENTIELS ET APPARTIENNENT À V.W.T. ET SONT SOUMIS À CONDITION QU'ILS SOIENT UTILISÉS UNIQUEMENT AUX FINS POUR LESQUELLES CE DOCUMENT EST EXPRESSÉMENT SOUMIS ET AUCUNE LICENCE IMPLICITE N'EST ACCORDÉE DE PAR LA SOUMISSION DE CE DOCUMENT. CE DOCUMENT CONTIENT DES RENSEIGNEMENTS CONFIDENTIELS ET PRIVILÉGIÉS QUI SONT PROPRIÉTAIRES DE V.W.T. ET NE DOIVENT PAS ÊTRE DIVULGUÉS, REPRODUITS, PRÊTÉS, VENDUS OU UTILISÉS EN TOUTE OU EN PARTIE À QUELQUE FIN QUE CE SOIT SANS LE CONSENTEMENT ÉCRIT DE V.W.T. V.W.T. N'ASSUME AUCUNE RESPONSABILITÉ OU RESPONSABILITÉ POUR L'UTILISATION DE CE DOCUMENT OU DES CONCEPTS ET L'INFORMATION CONTENUS DANS LES PRÉSENTES À DES FINS AUTRES QUE LE PROJET SPÉCIFIQUE LIÉ À L'OBJET DE CE DOCUMENT. EN AUCUN CAS CE DOCUMENT NE DOIT ÊTRE INTERPRÉTÉ COMME ÉTANT LIÉ À UNE LICENCE OU À UN DROIT DE PROPRIÉTÉ. TOUS LES DROITS D'AUTEUR, BREVET ET AUTRES DROITS DE PROPRIÉTÉ INTELLECTUELLE SONT RÉSERVÉS. L'ACCEPTATION DE LA LIVRAISON DE CE DOCUMENT CONSTITUE UNE ENTENTE À CES CONDITIONS ET MODALITÉS.

| | |
|---|---|
| DESSINÉ DESIGNER | M.JACQUES |
| DATE | 2019-02-12 |
| VÉRIFIÉ CHECKER | S.DUQUET |
| DATE | 2019-02-12 |
| INGÉNIEUR ENGINEER | |
| DATE | |
| ÉCHELLE/SCALE: | |

TITRE/TITLE: HYDRAPOL 250 CONTROL PANEL SCHEMATIC DIAGRAM 120VAC

CLIENT: IQALUIT WWTP

VEOLIA

VEOLIA WATER TECHNOLOGIES CANADA INC. 4105 Sartelon, Saint-Laurent, Qc, Canada. Tel: (514) 334-7230

| PROJET/PROJECT | DESSIN/DRAWING No | INTERNE/INTERNAL | FEUILLET/SHEET | REV. |
|---|---|---|---|---|
| 5000218036-ELD-0006-AUT-VWT | JOME01 | 3 DE 9 | | 4 |

LR 60892

STD: "D" 22x34 | EBI ELECTRIC - 58011-P01 | BAR = 1" À L'ÉCHELLE D'IMPRESSION/BAR = 1" AT PLOT SCALE

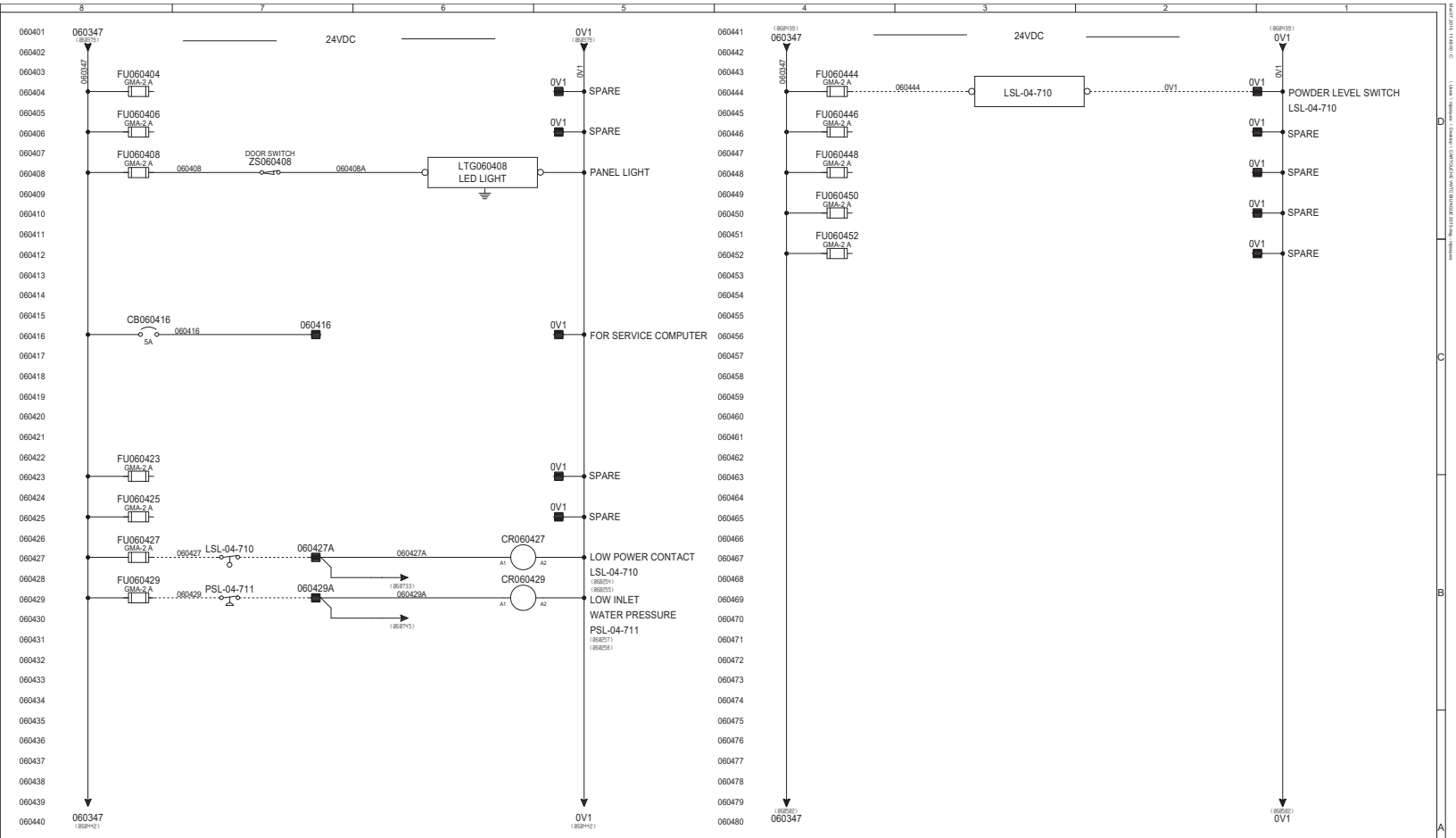


| | | | | | | | |
|---|---|---|---|---|---|---|---|
| 4 | AS COMMISSIONNING | 2019-05-17 | SD | | | | |
| 3 | AS BUILT | 2019-05-06 | SD | | | | |
| 2 | FOR FAB | 2019-04-02 | RM | | | | |
| 1 | FOR APPROVAL | 2019-03-18 | RM | | | | |
| REV. | DESCRIPTION | DATE | REV. | VERIF/CHK | APPR | ECN | |

CONFIDENTIALITY AND INTELLECTUAL PROPERTY NOTICE
ALL INFORMATION CONTAINED IN THIS DOCUMENT IS THE SOLE PROPERTY OF VEOLIA WATER TECHNOLOGIES CANADA INC. AND CONTAINS CONFIDENTIAL AND PROPRIETARY INFORMATION AND OTHER INTELLECTUAL PROPERTY LAWS. THE DESIGN CONCEPTS AND INFORMATION CONTAINED HEREIN ARE PROPRIETARY TO V.W.T. AND ARE SUBMITTED IN CONFIDENCE. THIS DOCUMENT AND THE INFORMATION MUST BE USED ONLY FOR THE PURPOSE FOR WHICH THE DOCUMENT IS IN POSSESSION IT SUBMITTED AND IN NO EVENT LICENCE IS GRANTED TO USE THE DESIGN CONCEPTS AND INFORMATION CONTAINED IN THIS CONFIDENTIAL AND PRIVILEGED INFORMATION OF V.W.T. AND THEY MUST NOT BE DISCLOSED, REPRODUCED, LOANED, RIBBITTED OR USED IN WHOLE OR IN PART FOR ANY PURPOSE WITHOUT THE PRIOR WRITTEN CONSENT OF V.W.T. V.W.T. ASSUMES NO RESPONSIBILITY OR LIABILITY FOR THE USE OF THIS DOCUMENT OR THE DESIGN CONCEPTS AND INFORMATION CONTAINED HEREIN FOR PURPOSES OTHER THAN THE SPECIFIC PURPOSE RELATED TO THE INTENDED FOR PURPOSE OF THIS DOCUMENT. IN NO EVENT SHALL THIS DOCUMENT OR THE DESIGN CONCEPTS AND INFORMATION CONTAINED HEREIN BE CONSTRUED AS GRANTING A LICENCE IN RESPECT OF V.W.T. ALL COPYRIGHT, PATENT AND OTHER INTELLECTUAL PROPERTY RIGHTS ARE RESERVED. ACCEPTANCE OF THE DELIVERY OF THIS DOCUMENT CONSTITUTES AGREEMENT TO THESE TERMS AND CONDITIONS.

AVIS DE CONFIDENTIALITÉ ET DE PROPRIÉTÉ INTELLECTUELLE
L'INFORMATION CONTENUE DANS CE DOCUMENT EST LA PROPRIÉTÉ EXCLUSIVE DE VEOLIA WATER TECHNOLOGIES CANADA INC. ET CONTIENT DES RENSEIGNEMENTS CONFIDENTIELS ET EXCLUSIFS AINSI QUE D'AUTRES DROITS DE PROPRIÉTÉ INTELLECTUELLE. LES DESIGN CONCEPTS ET INFORMATIONS CONTENUS DANS CE DOCUMENT SONT CONFIDENTIELS ET SOUMIS EN CONFIDENCE. CE DOCUMENT ET LES RENSEIGNEMENTS QU'IL CONTIENT DOIVENT ÊTRE UTILISÉS EXCLUSIVEMENT AUX FINS POUR LESQUELLES CE DOCUMENT EST EN POSSESSION ET NE FAIRE L'OBJET D'AUCUNE LICENCE. LES CONCEPTS ET RENSEIGNEMENTS CONFIDENTIELS ET EXCLUSIFS CONTENUS DANS CE DOCUMENT NE DOIVENT PAS ÊTRE DIVULGUÉS, REPRODUITS, PRÊTÉS, RIBBITÉS OU UTILISÉS EN TOUTE OU EN PARTIE À QUELQUE FIN QUE CE SOIT SANS LE CONSENTEMENT ÉCRIT PRÉALABLE DE V.W.T. V.W.T. DÉCLINE TOUTE RESPONSABILITÉ ET DÉGAGE LA VEOLIA TOUT RECOURS EN RESPONSABILITÉ RELATIVEMENT À L'UTILISATION DE CE DOCUMENT OU DES CONCEPTS ET RENSEIGNEMENTS QU'IL CONTIENT À DES FINS AUTRES QUE CELLES POUR LESQUELLES CE DOCUMENT EST EN POSSESSION ET NE FAIRE L'OBJET D'AUCUNE LICENCE. EN AUCUN CAS CE DOCUMENT NE DOIT ÊTRE INTERPRÉTÉ COMME UNE LICENCE À L'ÉGARD DE TOUT DROIT D'AUTEUR, BREVET OU AUTRE DROIT DE PROPRIÉTÉ INTELLECTUELLE DE V.W.T. TOUS DROITS D'AUTEUR, BREVET OU AUTRE DROIT DE PROPRIÉTÉ INTELLECTUELLE SONT RÉSERVÉS. L'ACCEPTATION DE LA LIVRAISON DE CE DOCUMENT CONSTITUE UN ACCORD À L'ÉGARD DE CES CONDITIONS ET MODALITÉS.

| | |
|---|---|
| DESSINÉ DESIGNER | M.JACQUES 2019-02-12 |
| VÉRIFIÉ CHECKER | S.DUQUET 2019-02-12 |
| INGÉNIEUR ENGINEER | |
| ÉCHELLE/SCALE: | |

TITRE/TITLE: HYDRAPOL 250 CONTROL PANEL SCHEMATIC DIAGRAM 24VDC

CLIENT: IQALUIT WWTP

VEOLIA

VEOLIA WATER TECHNOLOGIES CANADA INC. 4105 Sartelon, Saint-Laurent, Qc, Canada. Tel: (514) 334-7230

| PROJET/PROJECT | DESSIN/DRAWING No | INTERNE/INTERNAL | FEUILLET/SHEET | REV. |
|---|---|---|---|---|
| 5000218036-ELD-0006-AUT-VWT | JOME01 | 4 DE 9 | | 4 |

LR 60892

STD: "D" 22x34 | EBI ELECTRIC - 58011-P01 | BAR = 1" À L'ÉCHELLE D'IMPRESSION/BAR = 1" AT PLOT SCALE

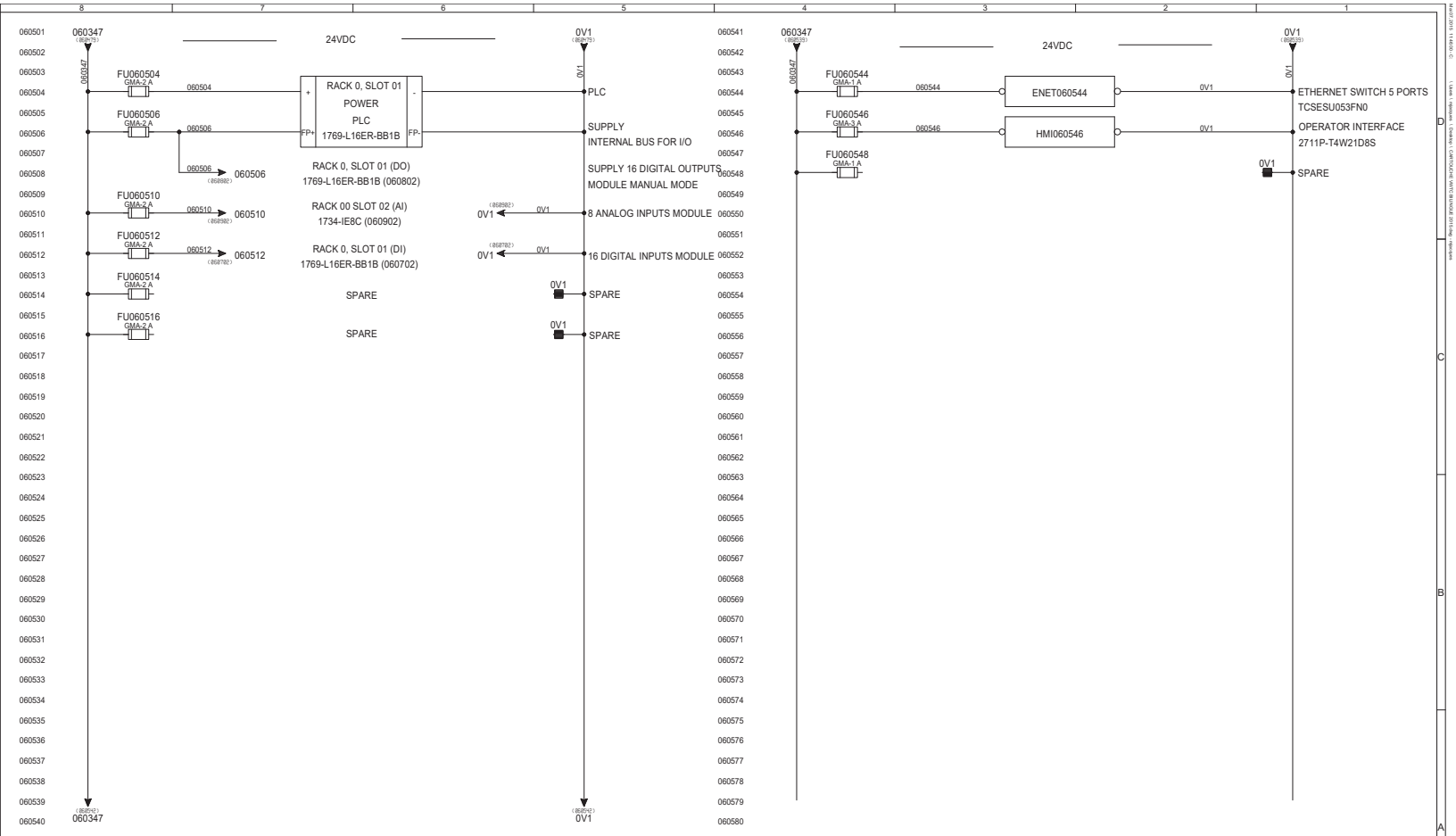


| REV. | DESCRIPTION | DATE | REV. | VERIF/CHK | APPR | ECN |
|---|---|---|---|---|---|---|
| 4 | AS COMMISSIONNING | 2019-05-17 | SD | | | |
| 3 | AS BUILT | 2019-05-06 | SD | | | |
| 2 | FOR FAB | 2019-04-02 | RM | | | |
| 1 | FOR APPROVAL | 2019-03-18 | RM | | | |

CONFIDENTIALITY AND INTELLECTUAL PROPERTY NOTICE: ALL INFORMATION CONTAINED IN THIS DOCUMENT IS THE SOLE PROPERTY OF VEOLIA WATER TECHNOLOGIES CANADA INC. AND MAY INCORPORATE CONFIDENTIAL AND PROPRIETARY INFORMATION, OTHER INTELLECTUAL PROPERTY LAWS. THE DESIGN CONCEPTS AND INFORMATION CONTAINED HEREIN ARE PROPRIETARY TO VWT, AND ARE SUBMITTED TO YOU ON THE CONDITION THAT THEY AND THIS DOCUMENT MUST BE USED ONLY FOR THE PURPOSE FOR WHICH THE DOCUMENT IS BEXPRESSLY SUBMITTED AND NO IMPLICIT LICENCE IS GRANTED TO YOU OR ANY OTHER PERSON. THIS DOCUMENT MAY CONTAIN CONFIDENTIAL AND PRIVILEGED INFORMATION OF VWT AND THEY MUST NOT BE DISCLOSED, REPRODUCED, LOANED, REBITTED OR USED IN WHOLE OR IN PART FOR ANY PURPOSE WITHOUT THE PRIOR WRITTEN CONSENT OF V.W.T. V.W.T ASSUMES NO RESPONSIBILITY OR LIABILITY FOR THE USE OF THIS DOCUMENT OR THE DESIGN CONCEPTS AND INFORMATION CONTAINED HEREIN FOR PURPOSES OTHER THAN THE SPECIFIC PROJECT TO WHICH IT RELATES OR THE OTHER EXPRESS PURPOSE OF THIS DOCUMENT. IN NO EVENT SHALL THIS DOCUMENT OR THE DESIGN CONCEPTS AND INFORMATION CONTAINED HEREIN BE USED FOR ANY PURPOSE DETRIMENTAL TO THE INTERESTS OF VWT. ALL COPYRIGHT, PATENT AND OTHER INTELLECTUAL PROPERTY RIGHTS ARE RESERVED. ACCEPTANCE OF THE DELIVERY OF THIS DOCUMENT CONSTITUTES AGREEMENT TO THESE TERMS AND CONDITIONS.

AVIS DE CONFIDENTIALITÉ ET DE PROPRIÉTÉ INTELLECTUELLE : LES RENSEIGNEMENTS CONTENUS DANS CE DOCUMENT SONT LA PROPRIÉTÉ EXCLUSIVE DE VEOLIA WATER TECHNOLOGIES CANADA INC. ET PEUVENT NOTAMMENT LES LOIS SUR LA PROPRIÉTÉ INTELLECTUELLE. LES DESIGNS CONCEPTS ET INFORMATIONS CONTENUS DANS CE DOCUMENT SONT LA PROPRIÉTÉ DE VWT ET SONT SOUMIS AU FAIT QUE CE DOCUMENT DOIT ÊTRE UTILISÉ EXCLUSIVEMENT AUX FINS POUR LESQUELLES CE DOCUMENT EST EXPRESSÉMENT SOUMIS ET AUCUNE LICENCE IMPLICITE N'EST OCTROYÉE DE VOUS OU DE TOUTE AUTRE PERSONNE. CE DOCUMENT PEUT CONTENIR DES INFORMATIONS CONFIDENTIELLES ET PRIVILÉGIÉES ET VWT ET AUCUNEMENT PEUVENT NE DOIVENT PAS ÊTRE DIVULGUÉES, REPRODUITES, PRÊTÉES, RENDUES OU UTILISÉES EN TOUTE OU EN PARTIE À DES FINS QUELCONQUES SANS LE CONSENTEMENT PRÉALABLE ÉCRIT DE V.W.T. V.W.T N'ASSUME AUCUNE RESPONSABILITÉ OU RESPONSABILITÉ POUR L'UTILISATION DE CE DOCUMENT OU DES CONCEPTS DE CONCEPTION ET DES INFORMATIONS QUI Y SONT CONTENUES À DES FINS AUTRES QUE CELLES POUR LESQUELLES CE DOCUMENT EST SOUMIS ET EN PARTICULIER DE MANIÈRE PRÉJUDICIABLE AUX INTÉRÊTS DE VWT. TOUS LES DROITS D'AUTEUR, BREVETS ET AUTRES DROITS DE PROPRIÉTÉ INTELLECTUELLE SONT RÉSERVÉS. L'ACCEPTATION DE LA LIVRAISON DE CE DOCUMENT CONSTITUE UN ACCORD À CES CONDITIONS ET MODALITÉS.

| | |
|---|---|
| DESSINÉ DESIGNER | M.JACQUES |
| DATE | 2019-02-12 |
| VÉRIFIÉ CHECKER | S.DUQUET |
| DATE | 2019-02-12 |
| INGÉNIEUR ENGINEER | |
| DATE | |
| ÉCHELLE/SCALE: | |

TITRE/TITLE: HYDRAPOL 250 CONTROL PANEL SCHEMATIC DIAGRAM 24VDC

CLIENT: IQALUIT WWTP

VEOLIA

VEOLIA WATER TECHNOLOGIES CANADA INC. 4105 Sartelon, Saint-Laurent, Qc, Canada. Tel: (514) 334-7230

| PROJET/PROJECT | DESSIN/DRAWING No | INTERNE/INTERNAL | FEUILLET/SHEET | REV. |
|---|---|---|---|---|
| 5000218036 | ELD-0006-AUT-VWT | JOME01 | 5 DE 9 | 4 |

LR 60892

STD: "D" 22x34 | EBI ELECTRIC - 58011-P01 | BAR = 1" À L'ÉCHELLE D'IMPRESSION/BAR = 1" AT PLOT SCALE

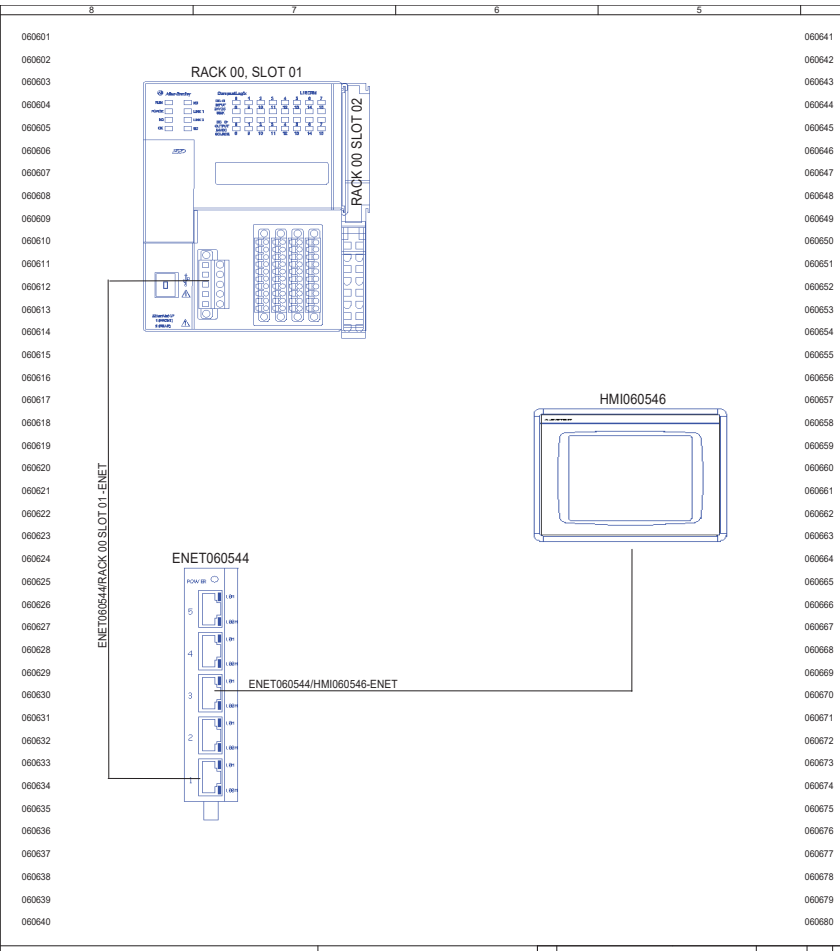


RACK 0

SLOT 01, INPUTS, 1769-L16ER-BB1B, SEE CONNECTING DETAIL DRAWING 5000218036-ELD-0006-AUT-VWT-07
SLOT 01, OUTPUTS, 1769-L16ER-BB1B, SEE CONNECTING DETAIL DRAWING 5000218036-ELD-0006-AUT-VWT-08
SLOT 02, 1734-IE8C, SEE CONNECTING DETAIL DRAWING 5000218036-ELD-0006-AUT-VWT-09

LR 60892

| REV. | DESCRIPTION | DATE | REV. | VERIF/CHK | APPR. | ECN |
|---|---|---|---|---|---|---|
| 4 | AS COMMISSIONNING | 2019-05-17 | SD | | | |
| 3 | AS BUILT | 2019-05-06 | SD | | | |
| 2 | FOR FAB | 2019-04-02 | RM | | | |
| 1 | FOR APPROVAL | 2019-03-18 | RM | | | |

CONFIDENTIALITY AND INTELLECTUAL PROPERTY NOTICE
ALL INFORMATION CONTAINED IN THIS DOCUMENT IS THE SOLE PROPERTY OF VEOLIA WATER TECHNOLOGIES CANADA INC. AND IS SUBJECT TO COPYRIGHT, PATENT AND OTHER INTELLECTUAL PROPERTY LAWS. THE DESIGN CONCEPTS AND INFORMATION CONTAINED HEREIN ARE PROPRIETARY TO V.W.T. AND ARE SUBMITTED IN CONFIDENCE. THIS DOCUMENT MUST NOT BE USED ONLY FOR THE PURPOSE FOR WHICH THE DOCUMENT IS BEIN SUBMITTED. NEIT NO SUPPLIER LICENCE IS GRANTED HEREBY. THIS DOCUMENT MUST NOT BE DISCLOSED, REPRODUCED, LOANED, TRANSMITTED OR USED IN CONFIDENTIAL AND PRIVILEGED INFORMATION OF V.W.T. AND THEY MUST NOT BE DISCLOSED, REPRODUCED, LOANED, TRANSMITTED OR USED IN WHOLE OR IN PART WITHOUT THE PRIOR WRITTEN CONSENT OF V.W.T. V.W.T. DISCLAIMS RESPONSIBILITY OR LIABILITY FOR THE USE OF THIS DOCUMENT OR THIS DESIGN CONCEPTS AND INFORMATION CONTAINED HEREIN FOR PURPOSES OTHER THAN THOSE FOR WHICH IT IS INTENDED OR OTHER THAN PURSUANT TO THE TERMS OF THIS DISCLAIMER. IN NO EVENT SHALL THIS DOCUMENT OR THE DESIGN CONCEPTS AND INFORMATION CONTAINED HEREIN BE DEEMED TO BE A WARRANTY OR A GUARANTEE OF V.W.T. ALL COPYRIGHT, PATENT AND OTHER INTELLECTUAL PROPERTY RIGHTS ARE RESERVED. ACCEPTANCE OF THE DELIVERY OF THIS DOCUMENT CONSTITUTES AGREEMENT TO THESE TERMS AND CONDITIONS.

AVIS DE CONFIDENTIALITÉ ET DE PROPRIÉTÉ INTELLECTUELLE
L'INFORMATION CONTENUE DANS CE DOCUMENT EST LA PROPRIÉTÉ EXCLUSIVE DE VEOLIA WATER TECHNOLOGIES CANADA INC. ET EST SOUMISE AUX LOIS SUR LE DROIT D'AUTEUR ET SUR LES DROITS DE PROPRIÉTÉ INTELLECTUELLE. LES IDÉES CONCEPTS ET INFORMATIONS CONTENUES DANS CE DOCUMENT SONT LA PROPRIÉTÉ EXCLUSIVE DE V.W.T. ET SONT SOUMISES EN CONFIDENCE. CE DOCUMENT DOIT SEULEMENT ÊTRE UTILISÉ À LA FIN POUR LAQUELLE IL EST SOUMIS. AUCUNE LICENCE DE FABRICATION NE SERA CONFÉRÉE À UN FOURNISSEUR PAR LA PRÉSENTE. CE DOCUMENT NE DOIT PAS ÊTRE DIVULGUÉ, REPRODUIT, PRÊTÉ, TRANSMIS OU UTILISÉ EN TOUT OU EN PARTIE SANS LE CONSENTEMENT PRÉALABLE DE V.W.T. V.W.T. DÉCLINE TOUTE RESPONSABILITÉ OU RESPONSABILITÉ NÉE DE L'USAGE DE CE DOCUMENT OU DES IDÉES ET CONCEPTS ET INFORMATIONS CONTENUES DANS CE DOCUMENT À DES FINS AUTRES QUE CELLES POUR LESQUELLES IL EST PRÉVU OU AUTRE QUE CELLES PRÉVUES DANS LE CONTEXTE PRÉCITÉ. DE PLUS AUCUNE DISCLAIMER DOCUMENT NIRE LES IDEES ET CONCEPTS ET INFORMATION QUI SONT CONTENUES DANS CE DOCUMENT NE SERA CONSIDÉRÉ COMME UNE GARANTIE OU UNE GARANTIE DE V.W.T. TOUTES LES DROITS DE COPYRIGHT, BREVETS ET AUTRES PROPRIÉTÉS INTELLECTUELLES SONT RÉSERVÉS. L'ACCEPTATION DE LA LIVRAISON DE CE DOCUMENT CONSTITUE UNE ENTENTE À CES TERMES ET CONDITIONS.

| | | |
|---|---|---|
| DESSINÉ DESIGNER | M.JACQUES | DATE 2019-02-12 |
| VÉRIFIÉ CHECKER | S.DUQUET | DATE 2019-02-12 |
| INGÉNIEUR ENGINEER | | DATE |
| ÉCHELLE/SCALE: | | |

TITRE TITLE: HYDRAPOL 250 CONTROL PANEL ETHERNET NETWORK AND PLC

CLIENT: IQALUIT WWTP

VEOLIA

VEOLIA WATER TECHNOLOGIES CANADA INC. 4105 Sartelon, Saint-Laurent, Qc, Canada, Tel: (514) 334-7230

| PROJET/PROJECT | DESSIN/DRAWING No | INTERNE/INTERNAL | FEUILLE/SHEET | REV. |
|---|---|---|---|---|
| 5000218036-ELD-0006-AUT-VWT | JOME01 | 6 DE 9 | | 4 |

STD: "D" 22x34 | EBI ELECTRIC - 58011-P01 | BAR = 1" À L'ÉCHELLE D'IMPRESSION/BAR = 1" AT PLOT SCALE

Mar07 2019 11:46:00 C:\Users\mjacques\Desktop\CARTOUCHE-VWTC-BLANCHE-2019.dwg - mjacques

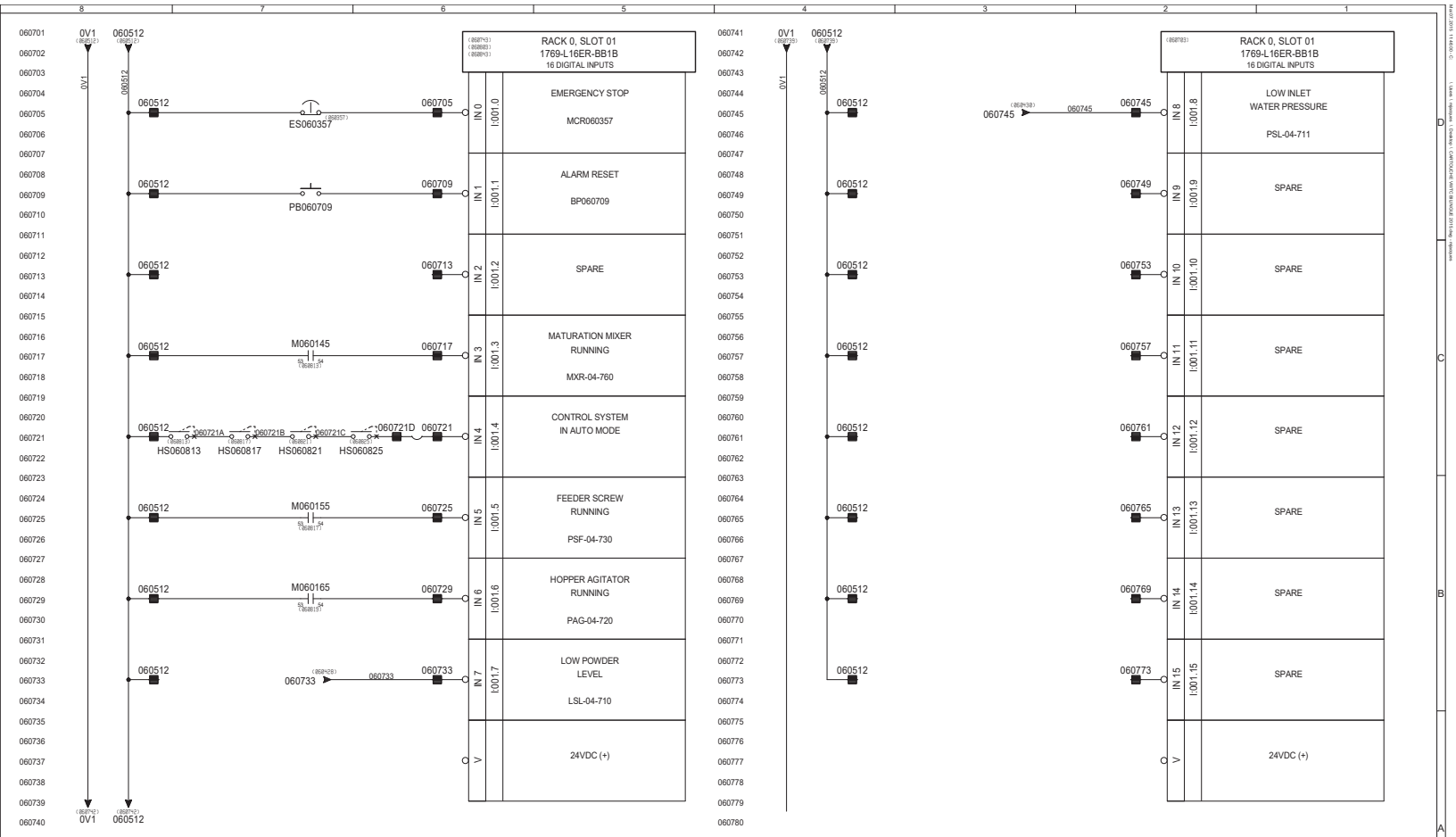


| | | | | | | | |
|---|---|---|---|---|---|---|---|
| 4 | AS COMMISSIONNING | 2019-05-17 | SD | | | | |
| 3 | AS BUILT | 2019-05-06 | SD | | | | |
| 2 | FOR FAB | 2019-04-02 | RM | | | | |
| 1 | FOR APPROVAL | 2019-03-18 | RM | | | | |
| REV. | DESCRIPTION | DATE | REV. | VERIC/HK | APPR. | ECN | |

CONFIDENTIALITY AND INTELLECTUAL PROPERTY NOTICE: ALL INFORMATION CONTAINED IN THIS DOCUMENT IS THE SOLE PROPERTY OF VEOLIA WATER TECHNOLOGIES CANADA INC. AND CONTAINS CONFIDENTIAL AND PROPRIETARY INFORMATION AND OTHER INTELLECTUAL PROPERTY LAWS. THE DESIGN CONCEPTS AND INFORMATION CONTAINED HEREIN ARE PROPRIETARY TO "I.W.T." AND ARE SUBMITTED IN CONFIDENCE. THIS DOCUMENT AND THE INFORMATION MUST BE USED ONLY FOR THE PURPOSE FOR WHICH THE DOCUMENT IS IN POSSESSION IF SUBMITTED. AND IN NO EVENT LICENCE IS GRANTED TO USE THE DESIGN CONCEPTS AND INFORMATION CONTAINED IN THIS CONFIDENTIAL AND PRIVILEGED INFORMATION OF I.W.T. AND THEY MUST NOT BE DISCLOSED, REPRODUCED, LOANED, RIBBITTED OR USED IN WHOLE OR IN PART FOR ANY PURPOSE WITHOUT THE EXPRESS WRITTEN CONSENT OF I.W.T. I.W.T. ASSUMES NO RESPONSIBILITY OR LIABILITY FOR THE USE OF THIS DOCUMENT OR THE DESIGN CONCEPTS AND INFORMATION CONTAINED HEREIN FOR PURPOSES OTHER THAN THE SPECIFIC PURPOSE RELATED TO THE OTHERWISE PURPOSE OF THIS DOCUMENT. IN NO EVENT SHALL THIS DOCUMENT OR THE DESIGN CONCEPTS AND INFORMATION CONTAINED HEREIN BE USED BY ANY PARTY FOR ANY PURPOSE IN VIOLATION OF I.W.T. ALL COPYRIGHT, PATENT AND OTHER INTELLECTUAL PROPERTY RIGHTS ARE RESERVED. ACCEPTANCE OF THE DELIVERY OF THIS DOCUMENT CONSTITUTES AGREEMENT TO THESE TERMS AND CONDITIONS.

AVIS DE CONFIDENTIALITÉ ET DE PROPRIÉTÉ INTELLECTUELLE : L'INFORMATION CONTENUE DANS CE DOCUMENT EST LA PROPRIÉTÉ EXCLUSIVE DE VEOLIA WATER TECHNOLOGIES CANADA INC. ET CONTIENT DES RENSEIGNEMENTS CONFIDENTIELS ET EXCLUSIFS AINSI QUE D'AUTRES LOIS SUR LA PROPRIÉTÉ INTELLECTUELLE. LES IDÉES ET CONCEPTS ET L'INFORMATION CONTENUS DANS CE DOCUMENT SONT EXPRIMÉES EN CE QUI CONCERNE LA PROPRIÉTÉ DE "I.W.T." ET SONT SOUMIS EN CONFIDENCE. CE DOCUMENT ET L'INFORMATION DOIVENT ÊTRE UTILISÉS UNIQUEMENT AUX FINS POUR LESQUELLES CE DOCUMENT EST EN POSSESSION SI SOUMIS ET AUCUNE LICENCE N'EST ACCORDÉE DE L'UTILISER POUR TOUTE AUTRE FIN QUE CELLE POUR LAQUELLE IL A ÉTÉ SOUMIS. LES RENSEIGNEMENTS CONFIDENTIELS ET PRIVILÉGIÉS SONT LA PROPRIÉTÉ DE I.W.T. ET NE DOIVENT PAS ÊTRE DIVULGUÉS, REPRODUITS, PRÊTÉS, RIBBITÉS OU UTILISÉS EN TOUTE OU EN PARTIE À QUELQUE FIN QUE CE SOIT SANS LE CONSENTEMENT ÉCRIT DE I.W.T. I.W.T. N'ASSUME AUCUNE RESPONSABILITÉ OU RESPONSABILITÉ POUR L'UTILISATION DE CE DOCUMENT OU DES CONCEPTS DE CONCEPTION ET DE L'INFORMATION CONTENUE DANS LES PRÉSENTES À DES FINS AUTRES QUE LES FINS SPÉCIFIQUES LIÉES À L'OBJET DE CE DOCUMENT. EN AUCUN CAS CE DOCUMENT NE DOIT ÊTRE UTILISÉ PAR UNE PARTIE À QUELQUE FIN QUE CE SOIT EN VIOLATION DES CONCEPTS DE CONCEPTION ET DE L'INFORMATION CONTENUE DANS LES PRÉSENTES À DES FINS CONNEXES. TOUS LES DROITS D'AUTEUR, BREVETS ET AUTRES DROITS DE PROPRIÉTÉ INTELLECTUELLE SONT RÉSERVÉS. L'ACCEPTATION DE LA LIVRAISON DE CE DOCUMENT CONSTITUE UNE ENTENTE À L'ÉGARD DE CES CONDITIONS ET MODALITÉS.

| | |
|---|---|
| DESSINÉ DESIGNER | M.JACQUES |
| DATE | 2019-02-12 |
| VÉRIFIÉ CHECKER | S.DUQUET |
| DATE | 2019-02-12 |
| INGÉNIEUR ENGINEER | |
| DATE | |
| ÉCHELLE/SCALE: | |

TITRE/TITLE: HYDRAPOL 250 CONTROL PANEL
RACK 00 SLOT 01 INPUTS, 1769-L18ER-BB1B

CLIENT: IQALUIT WWTP

VEOLIA

VEOLIA WATER TECHNOLOGIES CANADA INC. 4105 Sartelon, Saint-Laurent, Qc, Canada. Tel: (514) 334-7230

| PROJET/PROJECT | DESSIN/DRAWING No | INTERNE/INTERNAL | FEUILLET/SHEET | REV. |
|---|---|---|---|---|
| 5000218036-ELD-0006-AUT-VWT | JOME01 | 7 DE 9 | | 4 |

LR 60892

STD: "D" 22x34 | EBI ELECTRIC - 58011-P01 | BAR = 1" À L'ÉCHELLE D'IMPRESSION/BAR = 1" AT PLOT SCALE

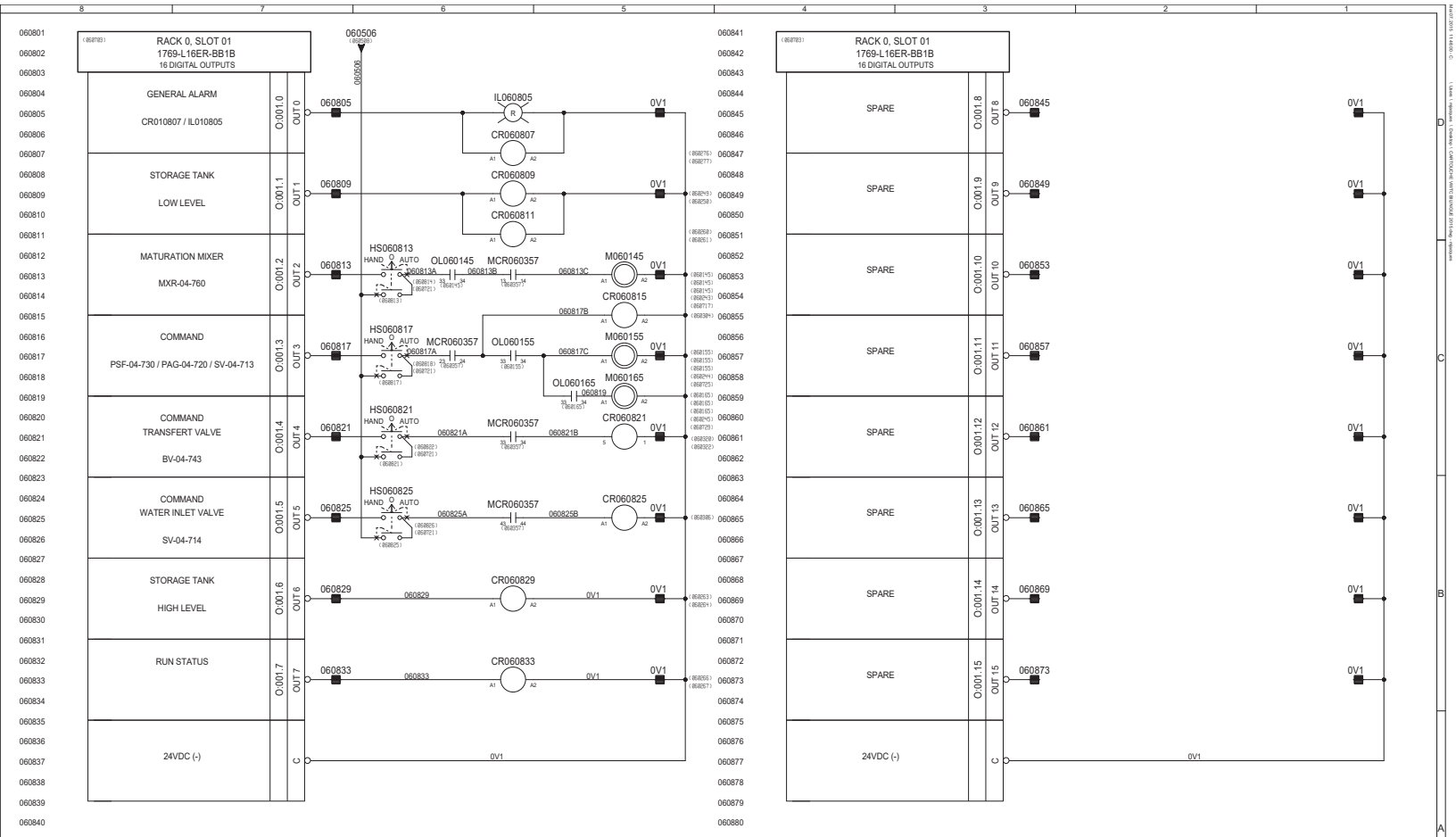


| | | | | | | | |
|---|---|---|---|---|---|---|---|
| 4 | AS COMMISSIONNING | 2019-05-17 | SD | | | | |
| 3 | AS BUILT | 2019-05-06 | SD | | | | |
| 2 | FOR FAB | 2019-04-02 | RM | | | | |
| 1 | FOR APPROVAL | 2019-03-18 | RM | | | | |

| REV. | DESCRIPTION | DATE | REV. | VERIF/CHK | APPR | ECN |
|---|---|---|---|---|---|---|

LR 60892

STD: "D" 22x34 | EBI ELECTRIC - 58011-P01 | BAR = 1" À L'ÉCHELLE D'IMPRESSION/BAR = 1" AT PLOT SCALE

CONFIDENTIALITY AND INTELLECTUAL PROPERTY NOTICE
ALL INFORMATION CONTAINED IN THIS DOCUMENT IS THE SOLE PROPERTY OF VEOLIA WATER TECHNOLOGIES CANADA INC. AND IS PROTECTED BY COPYRIGHT, PATENT AND OTHER INTELLECTUAL PROPERTY LAWS. THE DESIGN CONCEPTS AND INFORMATION CONTAINED HEREIN ARE PROPRIETARY TO V.W.T. AND ARE SUBMITTED IN CONFIDENCE. THIS DOCUMENT OR ANY PART THEREOF MUST BE USED ONLY FOR THE PURPOSE FOR WHICH THE DOCUMENT IS IN POSSESSION IT SUBMITTED AND IN DUPLICATE LICENCE IS GRANTED TO THE RECIPIENT. THIS DOCUMENT CONTAINS TRADE SECRETS AND CONFIDENTIAL AND PRIVILEGED INFORMATION OF V.W.T. AND THEY MUST NOT BE DISCLOSED, REPRODUCED, LOANED, WHETTED OR USED IN WHOLE OR IN PART FOR ANY PURPOSE WITHOUT THE PRIOR WRITTEN CONSENT OF V.W.T. ASSUMING NO RESPONSIBILITY OR LIABILITY FOR THE USE OF THIS DOCUMENT OR THE DESIGN CONCEPTS AND INFORMATION CONTAINED HEREIN FOR PURPOSES OTHER THAN THE SPECIFIC PROJECT RELATED TO THE INTENDED PURPOSE OF THIS DOCUMENT. IN NO EVENT SHALL THIS DOCUMENT OR THE DESIGN CONCEPTS AND INFORMATION CONTAINED HEREIN BE USED FOR ANY PURPOSE DETRIMENTAL TO THE INTERESTS OF V.W.T. ALL COPYRIGHT, PATENT AND OTHER INTELLECTUAL PROPERTY RIGHTS ARE RESERVED. ACCEPTANCE OF THE DELIVERY OF THIS DOCUMENT CONSTITUTES AGREEMENT TO THESE TERMS AND CONDITIONS.

AVIS DE CONFIDENTIALITÉ ET DE PROPRIÉTÉ INTELLECTUELLE
L'INFORMATION CONTENUE DANS CE DOCUMENT EST LA PROPRIÉTÉ EXCLUSIVE DE VEOLIA WATER TECHNOLOGIES CANADA INC. ET EST PROTÉGÉE PAR LES LOIS SUR LES DROITS D'AUTEUR, LES BREVETS ET LES AUTRES LOIS RELATIVES À LA PROPRIÉTÉ INTELLECTUELLE. LES IDÉES ET RENSEIGNEMENTS CONTENUS DANS CE DOCUMENT SONT CONFIDENTIELS ET APPARTIENNENT EXCLUSIVEMENT À V.W.T. CE DOCUMENT EST SOUMIS EN CONFIANCE. IL NE PEUT ÊTRE UTILISÉ QU'AUX FINS POUR LESQUELLES IL A ÉTÉ REMIS ET LA LICENCE EST ACCORDÉE UNIQUEMENT AU DESTINATAIRE. CE DOCUMENT CONTIENT DES SECRETS COMMERCIAUX ET DES RENSEIGNEMENTS CONFIDENTIELS ET PRIVILÉGIÉS QUI SONT LA PROPRIÉTÉ EXCLUSIVE DE V.W.T. CES RENSEIGNEMENTS NE DOIVENT PAS ÊTRE DIVULGUÉS, REPRODUITS, PRÊTÉS, VENDUS OU UTILISÉS EN TOUTE OU EN PARTIE À QUELQUE FIN QUE CE SOIT SANS LE CONSENTEMENT PRÉALABLE ÉCRIT DE V.W.T. EN RECONNAISSANT QU'AUCUNE RESPONSABILITÉ OU OBLIGATION NE DÉCOULE DE L'UTILISATION DE CE DOCUMENT OU DES IDÉES ET RENSEIGNEMENTS QU'IL CONTIENT POUR DES FINS AUTRES QUE CELLES PRÉVUES DANS LE CADRE DU PROJET PRÉCIS LIÉ À L'OBJET PRÉVU DE CE DOCUMENT. EN AUCUN CAS CE DOCUMENT NI LES IDÉES OU RENSEIGNEMENTS QU'IL CONTIENT NE DOIVENT ÊTRE UTILISÉS À DES FINS QUI NUISENT AUX INTÉRÊTS DE V.W.T. TOUS LES DROITS D'AUTEUR, BREVETS ET AUTRES DROITS DE PROPRIÉTÉ INTELLECTUELLE SONT RÉSERVÉS. L'ACCEPTATION DE LA LIVRAISON DE CE DOCUMENT NE CONSTITUE EN AUCUN CAS UNE CESSION DE CES DROITS.

| | | |
|---|---|---|
| DESSINÉ DESIGNER | M.JACQUES | DATE 2019-02-12 |
| VÉRIFIÉ CHECKER | S.DUQUET | DATE 2019-02-12 |
| INGÉNIEUR ENGINEER | | DATE |
| ÉCHELLE/SCALE: | | |

TITRE/TITLE: HYDRAPOL 250 CONTROL PANEL
RACK 00 SLOT 01 OUTPUTS, 1769-L18ER-BB1B

CLIENT: IQALUIT WWTP

VEOLIA

VEOLIA WATER TECHNOLOGIES CANADA INC. 4105 Sartelon, Saint-Laurent, Qc, Canada. Tel: (514) 334-7230

| PROJET/PROJECT | DESSIN/DRAWING No | INTERNE/INTERNAL | FEUILLET/SHEET | REV. |
|---|---|---|---|---|
| 5000218036 | ELD-0006-AUT-VWT | JOME01 | 8 DE 9 | 4 |

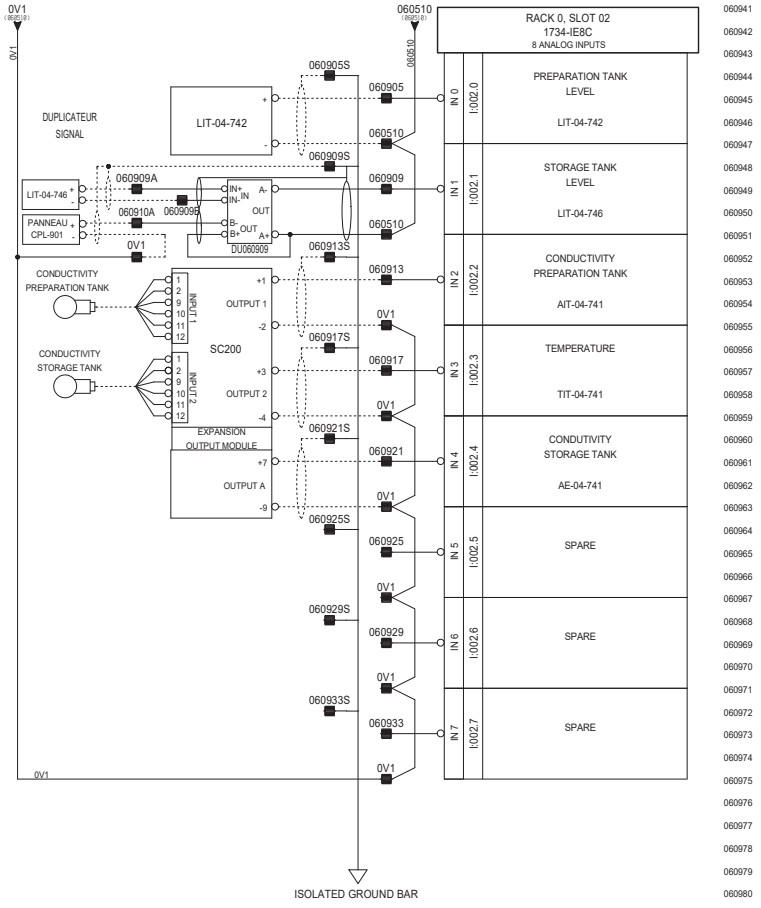


| REV. | DESCRIPTION | DATE | REV. | VERIF/CHK | APPR | ECN |
|---|---|---|---|---|---|---|
| 4 | AS COMMISSIONNING | 2019-05-17 | SD | | | |
| 3 | AS BUILT | 2019-05-06 | SD | | | |
| 2 | FOR FAB | 2019-04-02 | RM | | | |
| 1 | FOR APPROVAL | 2019-03-18 | RM | | | |

CONFIDENTIALITY AND INTELLECTUAL PROPERTY NOTICE
ALL INFORMATION CONTAINED IN THIS DOCUMENT IS THE SOLE PROPERTY OF VEOLIA WATER TECHNOLOGIES CANADA INC. AND CONTAINS CONFIDENTIAL AND PROPRIETARY INFORMATION AND OTHER INTELLECTUAL PROPERTY LAWS. THE DESIGN CONCEPTS AND INFORMATION CONTAINED HEREIN ARE PROPRIETARY TO "I.S.T." AND ARE SUBMITTED IN CONFIDENCE FOR THE SOLE USE OF "I.S.T." AND MUST BE USED ONLY FOR THE PURPOSE FOR WHICH THE DOCUMENT IS IN POSSESSION IT SUBMITTED. AND IN NO IMPLICIT LICENCE IS GRANTED TO USE THE DESIGN CONCEPTS CONTAINED HEREIN. THIS DOCUMENT IS CONFIDENTIAL AND PRIVILEGED INFORMATION OF "I.S.T." AND THEY MUST NOT BE DISCLOSED, REPRODUCED, LOANED, RIBBITTED OR USED IN WHOLE OR IN PART FOR ANY PURPOSE WITHOUT THE PRIOR WRITTEN OF "I.S.T." "I.S.T." ASSUMES NO RESPONSIBILITY OR LIABILITY FOR THE USE OF THIS DOCUMENT OR THE DESIGN CONCEPTS AND INFORMATION CONTAINED HEREIN FOR PURPOSES OTHER THAN THE SPECIFIC PROJECT RELATE TO THE OTHER OUR PURPOSE OF THIS DOCUMENT. IN NO EVENT SHALL THIS DOCUMENT OR THE DESIGN CONCEPTS AND INFORMATION CONTAINED HEREIN BE USED BY ANY PERSON FOR ANY PURPOSE OTHER THAN THE SPECIFIC PROJECT WITHOUT THE WRITTEN CONSENT OF "I.S.T." ALL COPYRIGHT, PATENT AND OTHER INTELLECTUAL PROPERTY RIGHTS ARE RESERVED. ACCEPTANCE OF THE DELIVERY OF THIS DOCUMENT CONSTITUTES AGREEMENT TO THESE TERMS AND CONDITIONS.

AVIS DE CONFIDENTIALITÉ ET DE PROPRIÉTÉ INTELLECTUELLE
L'INFORMATION CONTENUE DANS CE DOCUMENT EST LA PROPRIÉTÉ EXCLUSIVE DE VEOLIA WATER TECHNOLOGIES CANADA INC. ET CONTIENT DES RENSEIGNEMENTS CONFIDENTIELS ET EXCLUSIFS AINSI QUE D'AUTRES LOIS SUR LA PROPRIÉTÉ INTELLECTUELLE. LES DESIGN CONCEPTS ET INFORMATION CONTENUS DANS CE DOCUMENT SONT LA PROPRIÉTÉ DE "I.S.T." ET SONT SOUMIS EN CONFIDENCE POUR L'USAGE EXCLUSIF DE "I.S.T." CE DOCUMENT NE DOIT ÊTRE UTILISÉ QUE POUR LE BUT POUR LEQUEL IL EST SOUMIS ET AUCUNE LICENCE N'EST IMPLICITEMENT ACCORDÉE QUANT À L'UTILISATION DE L'INFORMATION CONTENUE DANS LES PRÉSENTES. CE DOCUMENT CONFIDENTIEL ET PRIVILÉGIÉ APPARTIENT À "I.S.T." ET NE DOIT PAS ÊTRE DIVULGUÉ, REPRODUIT, PRÊTÉ, RIBBIS OU UTILISÉ EN TOUTE OU EN PARTIE À QUELQUE FIN QUE CE SOIT SANS LE CONSENTEMENT PRÉALABLE ÉCRIT DE "I.S.T." "I.S.T." N'ASSUME AUCUNE RESPONSABILITÉ OU RESPONSABILITÉ QUANT À L'UTILISATION DE CE DOCUMENT OU DES DESIGN CONCEPTS ET L'INFORMATION CONTENUE DANS LES PRÉSENTES POUR DES FINS AUTRES QUE CELLES QUI SE RAPPORTENT DIRECTEMENT AU PROJET SPÉCIFIQUE RELATIF À L'OBJET DE CE DOCUMENT. EN AUCUN CAS CE DOCUMENT NI LES DESIGN CONCEPTS OU L'INFORMATION QU'IL CONTIENT NE DOIVENT ÊTRE UTILISÉS PAR QUICONQUE À DES FINS AUTRES QUE CELLES QUI SE RAPPORTENT DIRECTEMENT AU PROJET SPÉCIFIQUE RELATIF À L'OBJET DE CE DOCUMENT SANS LE CONSENTEMENT PRÉALABLE ÉCRIT DE "I.S.T." TOUS LES DROITS D'AUTEUR, BREVETS ET AUTRES DROITS DE PROPRIÉTÉ INTELLECTUELLE SONT RÉSERVÉS. L'ACCEPTATION DE LA LIVRAISON DE CE DOCUMENT CONSTITUE UNE ENTENTE À L'ÉGARD DE CES CONDITIONS.

| | | |
|---|---|---|
| DESSINÉ DESIGNER | M.JACQUES | DATE 2019-02-12 |
| VÉRIFIÉ CHECKER | S.DUQUET | DATE 2019-02-12 |
| INGÉNIEUR ENGINEER | | DATE |
| ÉCHELLE/SCALE: | | |

TITRE/TITLE: HYDRAPOL 250 CONTROL PANEL
RACK 0, SLOT 02, 1734-IE8C

CLIENT: IQALUIT WWTP

VEOLIA
VEOLIA WATER TECHNOLOGIES CANADA INC. 4105 Sartelon, Saint-Laurent, Qc, Canada. Tel: (514) 334-7230

| PROJET/PROJECT | DESSIN/DRAWING No | INTERNE/INTERNAL | FEUILLET/SHEET | REV. |
|---|---|---|---|---|
| 5000218036 | ELD-0006-AUT-VWT | JOME01 | 9 DE 9 | 4 |

LR 60892

STD: "D" 22x34 | EBI ELECTRIC - 58011-P01 | BAR = 1" À L'ÉCHELLE D'IMPRESSION/BAR = 1" AT PLOT SCALE

# HYDRAPOL 500 CONTROL PANEL
# PROJECT - 5000218036
# LCP-04-900
# BFP POLYMER DOSING SYSTEM

| REV. | DESCRIPTION | DATE | REV. | VERIC/VÉR | APPR. | ECN |
|---|---|---|---|---|---|---|
| 4 | AS COMMISSIONNING | 2019-05-17 | SD | | | |
| 3 | AS BUILT | 2019-05-03 | SD | | | |
| 2 | FOR FAB | 2019-04-02 | RM | | | |
| 1 | FOR APPROVAL | 2019-03-18 | RM | | | |

CONFIDENTIALITY AND INTELLECTUAL PROPERTY NOTICE:
ALL INFORMATION CONTAINED IN THIS DOCUMENT IS THE SOLE PROPERTY OF VEOLIA WATER TECHNOLOGIES CANADA INC. AND MAY CONTAIN CONFIDENTIAL AND PROPRIETARY INFORMATION OTHER INTELLECTUAL PROPERTY LAWS. THE DESIGN CONCEPTS AND INFORMATION CONTAINED HEREIN ARE PROPRIETARY TO V.W.T. AND ARE SUBMITTED TO AND IN CONFIDENCE TO THE RECIPIENT. THEY MUST BE USED ONLY FOR THE PURPOSE FOR WHICH THE DOCUMENT IS IN POSSESSION. IT SUBMITTED AND IN DUPLICATE LICENCE IS GRANTED TO THE RECIPIENT TO USE THE DESIGN CONCEPTS AND INFORMATION CONFIDENTIAL AND PRIVILEGED INFORMATION OF V.W.T. AND THEY MUST NOT BE DISCLOSED, REPRODUCED, LOANED, INSETTED OR USED IN WHOLE OR IN PART FOR ANY PURPOSE WITHOUT THE PRIOR WRITTEN CONSENT OF V.W.T. ASSUMES NO RESPONSIBILITY OR LIABILITY FOR THE USE OF THIS DOCUMENT OR THE DESIGN CONCEPTS AND INFORMATION CONTAINED HEREIN FOR PURPOSES OTHER THAN THE SPECIFIC PROJECT RELATED TO THE ATTACHED OR PURPOSES OF THIS DOCUMENT. IN NO EVENT SHALL THIS DOCUMENT OR THE DESIGN CONCEPTS AND INFORMATION CONTAINED HEREIN BE USED FOR ANY PURPOSE OTHER THAN THE SPECIFIC OF V.W.T. ALL COPYRIGHT, PATENT AND OTHER INTELLECTUAL PROPERTY RIGHTS ARE RESERVED. ACCEPTANCE OF THE DELIVERY OF THIS DOCUMENT CONSTITUTES AGREEMENT TO THESE TERMS AND CONDITIONS.

AVIS DE CONFIDENTIALITÉ ET DE PROPRIÉTÉ INTELLECTUELLE
L'INFORMATION CONTENUE DANS CE DOCUMENT EST LA PROPRIÉTÉ EXCLUSIVE DE VEOLIA WATER TECHNOLOGIES CANADA INC. ET PEUT CONTENIR D'AUTRES DROITS DE PROPRIÉTÉ INTELLECTUELLE. LES IDÉES ET CONCEPTS ET INFORMATIONS CONTENUES DANS CE DOCUMENT SONT CONFIDENTIELS ET PROPRIÉTAIRES À V.W.T. ET SONT SOUMIS À LA CONFIDENTIALITÉ. CE DOCUMENT NE PEUT ÊTRE UTILISÉ QUE DANS LE BUT POUR LEQUEL IL EST EN POSSESSION. SI SOUMIS ET EN DOUBLE LA LICENCE EST ACCORDÉE AU DESTINATAIRE POUR UTILISER LES IDÉES, CONCEPTS ET INFORMATIONS CONFIDENTIELS ET PRIVILÉGIÉS APPARTENANT À V.W.T. ET NE DOIVENT PAS ÊTRE DIVULGUÉS, REPRODUITS, PRÊTÉS, RÉDIGÉS OU UTILISÉS EN TOUTE OU EN PARTIE À TOUTE AUTRE FIN SANS LE CONSENTEMENT ÉCRIT PRÉALABLE DE V.W.T. V.W.T. DÉCLINE TOUTE RESPONSABILITÉ OU RESPONSABILITÉ EN CAS D'UTILISATION DE CE DOCUMENT AINSI QUE DES IDÉES ET CONCEPTS ET INFORMATION CONTENUES DANS LES PRÉSENTES À DES FINS AUTRES QUE CELLES LIÉES AU PROJET SPÉCIFIQUE CI-JOINT OU AUX FINS DE CE DOCUMENT. EN AUCUN CAS, CE DOCUMENT OU LES IDÉES ET CONCEPTS ET INFORMATION CONTENUES DANS LES PRÉSENTES NE DOIVENT ÊTRE UTILISÉS À D'AUTRES FINS QUE CELLES SPÉCIFIQUES DU PROJET CI-JOINT. TOUS LES DROITS D'AUTEUR, BREVET ET AUTRES DROITS DE PROPRIÉTÉ INTELLECTUELLE SONT RÉSERVÉS. L'ACCEPTATION DE LA LIVRAISON DE CE DOCUMENT CONSTITUE UN ACCORD À CES CONDITIONS ET MODALITÉS.

| | | |
|---|---|---|
| DESSINÉ DESIGNER | M.JACQUES | DATE 2019-02-12 |
| VÉRIFIÉ CHECKER | S.DUQUET | DATE 2019-02-12 |
| INGÉNIEUR ENGINEER | | DATE |
| ÉCHELLE/SCALE: | | |

TITRE/TITLE: HYDRAPOL 500 CONTROL PANEL
TITLE PAGE

CLIENT: IQALUIT WWTP

VEOLIA

VEOLIA WATER TECHNOLOGIES CANADA INC. 4105 Sartelon, Saint-Laurent, Qc, Canada. Tel: (514) 334-7230

| PROJET/PROJECT + DESSIN/DRAWING No | INTERNE/INTERNAL | FEUILLET/SHEET | REV. |
|---|---|---|---|
| 5000218036-EPL-0007-AUT-VWT | JOME01 | 1 DE 5 | 4 |

LR 60892

STD: "D" 22x34 | EBI ELECTRIC - 58011-P02 | BAR = 1" À L'ÉCHELLE D'IMPRESSION/BAR = 1" AT PLOT SCALE

M:\AUT\2015 11\5000 C \ Users \ mjacques \ Desktop \ CARTOUCHE \ VWTC RETAINER 2015.dwg - Model

DRAWING INDEX

| DESCRIPTION | DRAWING NUMBER |
|---|---|
| CONTROL PANEL | |
| TITLE PAGE | 5000218036-EPL-0007-AUT-VWT-01 |
| DRAWING LIST & LEGEND | 5000218036-EPL-0007-AUT-VWT-02 |
| OUTSIDE PANEL LAYOUT | 5000218036-EPL-0007-AUT-VWT-03 |
| INSIDE PANEL LAYOUT | 5000218036-EPL-0007-AUT-VWT-04 |
| PARTS LIST | 5000218036-EPL-0007-AUT-VWT-05 |
| | |
| SCHEMATIC DIAGRAM 600VAC | 5000218036-ELD-0007-AUT-VWT-01 |
| SCHEMATIC DIAGRAM 120VAC | 5000218036-ELD-0007-AUT-VWT-02 |
| SCHEMATIC DIAGRAM 120VAC | 5000218036-ELD-0007-AUT-VWT-03 |
| SCHEMATIC DIAGRAM 24VDC | 5000218036-ELD-0007-AUT-VWT-04 |
| SCHEMATIC DIAGRAM 24VDC | 5000218036-ELD-0007-AUT-VWT-05 |
| ETHERNET NETWORK AND PLC | 5000218036-ELD-0007-AUT-VWT-06 |
| RACK 00 SLOT 01 INPUTS, 1769-L16ER-BB1B | 5000218036-ELD-0007-AUT-VWT-07 |
| RACK 00 SLOT 01 OUTPUTS, 1769-L16ER-BB1B | 5000218036-ELD-0007-AUT-VWT-08 |
| RACK 0, SLOT 02, 1734-IEBC | 5000218036-ELD-0007-AUT-VWT-09 |

| COLORS AND WIRING GAGES | | |
|---|---|---|
| 120VAC POWER | BLACK | 14AWG |
| 120VAC CONTROL | RED | 14AWG |
| NEUTRE | WHITE | 14AWG |
| DRY CONTACT | YELLOW | 14AWG |
| 24VDC | BLUE(+), BLUE / WHITE(-) | 16AWG (0 TO 9A) 14AWG (10A & +) |
| GROUND | GREEN | 14AWG |
| ISOLATED GROUND | GREEN / YELLOW | 14AWG |
| ANALOG I/O TWISTED PAIRS | BLACK(+), WHITE(-) | 18AWG |
| DIGITAL I/O 120VA | RED | 16AWG |
| DIGITAL I/O 24VDC | BLUE | 16AWG |
| LOW VOLTAGE (12, 24, 48VDC) | BLUE | 16AWG (0 À 9A) 14AWG (10A & +) |
| CONTROL CIRCUIT 5 TO 60VDC | BLUE(+), BLUE/WHITE(-), GREEN(GND) | 16AWG (0 À 9A) 14AWG (10A & +) |

SUPPLY WIRING IDENTIFICATION

XX XX XX

- LINE NUMBER
- PAGE NUMBER
- PANEL NUMBER (IF MORE THAN ONE PANEL
  01 - PANEL No1
  02 - PANEL No2, ....

LEGEND LIST

- PSL — LOW PRESSURE SWITCH
- PSH — HIGH PRESSURE SWITCH
- LSL — LOW LEVEL SWITCH
- LSH — HIGH LEVEL SWITCH
- LSNO — LIMIT SWITCH NO
- LSNC — LIMIT SWITCH NC
- FSL — LOW FLOW SWITCH
- FSH — HIGH FLOW SWITCH
- TSL — LOW TEMPERATURE SWITCH
- TSH — HIGH TEMPERATURE SWITCH
- OFF DELAY TIMER [NO]
- OFF DELAY TIMER [NC]
- ON DELAY TIMER [NC]
- ON DELAY TIMER [NO]
- NO — CONTACT NO
- NC — CONTACT NC
- GND — GROUND
- GND — ISOLATED GROUND
- TERMINAL OF PANEL
- TERMINAL OF OTHER PANEL

- HS — MAINTAINED TWO POSITIONS SELECTOR
- HS — MAINTAINED THREE POSITIONS SELECTOR
- HS — THREE POSITIONS SELECTOR BOTH RETURN
- HS — THREE POSITIONS SELECTOR LEFT RETURN
- HS — THREE POSITIONS SELECTOR RIGHT RETURN
- PBNO — PUSH BUTTON NO
- PBNC — PUSH BUTTON NC
- ES — EMERGENCY STOP PUSH BUTTON
- POT — POTENTIOMETER
- FU — FUSE
- CB — CIRCUIT BREAKER
- IL — PUSH-TO-TEST LIGHT
- IL — LIGHT
- CMR — CURRENT MONITORING RELAY
- AC — A/C — AIR CONDITIONER UNIT

- M — CONTACTOR COIL
- TR — TIMER RELAY COIL
- CR — CONTROL RELAY COIL
- MCR — MASTER CONTROL RELAY COIL
- CR — CONTROL RELAY COIL WITH SURGE SURPRESSOR
- FV — SOLENOID
- R — RESISTANCE
- HN — HORN
- F — FAN / VENTILATOR / BLOWER
- CT — CURRENT TRANSFORMER
- PC — 120VAC DUPLEX OUTLET
- AM — AMPEREMETER
- VM — VOLMETER

- DISC — FUSED DISCONNECT SWITCH
- FU — 3PH FUSE HOLDER
- DISC — DISCONNECT SWITCH
- OL — MANUAL STARTER WITH THERMINAL & MAGNETIC PROTECTION
- OL — MANUAL STARTER WITH MAGNETIC PROTECTION
- M — CONTACTOR
- OL — OVERLOAD

- TR — H1, H2, X1, X2 — TRANSFORMER
- TR — H1, H2, X1, X2, X3, X4 — MULTI-TAPS TRANSFORMER

LR 60892

| REV. | DESCRIPTION | DATE | REV. | VERIF/CHK | APPR | ECN |
|---|---|---|---|---|---|---|
| 4 | AS COMMISSIONNING | 2019-05-17 | SD | | | |
| 3 | AS BUILT | 2019-05-03 | SD | | | |
| 2 | FOR FAB | 2019-04-02 | RM | | | |
| 1 | FOR APPROVAL | 2019-03-18 | RM | | | |

CONFIDENTIALITY AND INTELLECTUAL PROPERTY NOTICE
ALL INFORMATION CONTAINED IN THIS DOCUMENT IS THE SOLE PROPERTY OF VEOLIA WATER TECHNOLOGIES CANADA INC. AND CONTAINS CONFIDENTIAL AND PROPRIETARY INFORMATION AND OTHER INTELLECTUAL PROPERTY LAWS. THE DESIGN CONCEPTS AND INFORMATION CONTAINED HEREIN ARE PROPRIETARY TO V.W.T. AND ARE SUBMITTED IN CONFIDENCE. THIS DOCUMENT AND THE INFORMATION MUST BE USED ONLY FOR THE PURPOSE FOR WHICH THE DOCUMENT IS IS EXPRESSLY SUBMITTED AND NO IMPLICIT LICENCE IS GRANTED BY THIS DOCUMENT OR BY THE DISCLOSURE OF ITS CONTENTS. THIS CONFIDENTIAL AND PRIVILEGED INFORMATION OF V.W.T. AND THEY MUST NOT BE DISCLOSED, REPRODUCED, LOANED, INSERTED OR USED IN WHOLE OR IN PART FOR ANY PURPOSE WITHOUT THE EXPRESS WRITTEN CONSENT OF V.W.T. V.W.T. ASSUMES NO RESPONSIBILITY OR LIABILITY FOR THE USE OF THIS DOCUMENT OR THE DESIGN CONCEPTS AND INFORMATION CONTAINED HEREIN FOR PURPOSES OTHER THAN THE SPECIFIC PROJECT RELATED TO THE OTHERWISE EXPRESS OR THIS DOCUMENT. IN NO EVENT SHALL THIS DOCUMENT OR THE DESIGN CONCEPTS AND INFORMATION CONTAINED HEREIN BE USED BY ANY PERSON FOR ANY PURPOSE OTHER THAN THE SPECIFIC PROJECT WITHOUT THE WRITTEN CONSENT OF V.W.T. ALL COPYRIGHT, PATENT AND OTHER INTELLECTUAL PROPERTY RIGHTS ARE RESERVED. ACCEPTANCE OF THE DELIVERY OF THIS DOCUMENT CONSTITUTES AGREEMENT TO THESE TERMS AND CONDITIONS.

AVIS DE CONFIDENTIALITÉ ET DE PROPRIÉTÉ INTELLECTUELLE
L'INFORMATION CONTENUE DANS CE DOCUMENT EST LA PROPRIÉTÉ EXCLUSIVE DE VEOLIA WATER TECHNOLOGIES CANADA INC. ET CONTIENT DES RENSEIGNEMENTS CONFIDENTIELS ET EXCLUSIFS AINSI QUE D'AUTRES LOIS SUR LA PROPRIÉTÉ INTELLECTUELLE. LES IDÉES ET CONCEPTS ET RENSEIGNEMENTS CONTENUS DANS CE DOCUMENT SONT EXPRIMÉS EN CONFIDENCE. CE DOCUMENT ET LES RENSEIGNEMENTS QU'IL CONTIENT DOIVENT ÊTRE UTILISÉS EXCLUSIVEMENT AUX FINS POUR LESQUELLES CE DOCUMENT EST EXPRESSÉMENT SOUMIS ET AUCUNE LICENCE IMPLICITE N'EST OCTROYÉE EN VERTU DU PRÉSENT DOCUMENT OU DE LA DIVULGATION DE SON CONTENU. CES RENSEIGNEMENTS CONFIDENTIELS ET PRIVILÉGIÉS SONT LA PROPRIÉTÉ DE V.W.T. ET NE DOIVENT PAS ÊTRE DIVULGUÉS, REPRODUITS, PRÊTÉS, INSÉRÉS OU UTILISÉS EN TOUTE OU EN PARTIE À QUELQUE FIN QUE CE SOIT SANS LE CONSENTEMENT ÉCRIT DE V.W.T. V.W.T. DÉCLINE TOUTE RESPONSABILITÉ ET DÉGAGE LA VILLE DE SOREL-TRACY DE TOUTE RESPONSABILITÉ QUANT À L'UTILISATION DE CE DOCUMENT OU DES CONCEPTS ET RENSEIGNEMENTS QU'IL CONTIENT À DES FINS AUTRES QUE CELLES SPÉCIFIQUES AU PROJET VISÉ PAR CE DOCUMENT OU AUTREMENT EXPRIMÉES DANS CE DOCUMENT. EN AUCUN CAS CE DOCUMENT OU LES CONCEPTS ET RENSEIGNEMENTS QU'IL CONTIENT NE DOIVENT ÊTRE UTILISÉS PAR QUICONQUE À DES FINS AUTRES QUE CELLES PRÉCISÉES DANS LE PRÉSENT DOCUMENT SANS LE CONSENTEMENT ÉCRIT DE V.W.T. TOUS LES DROITS D'AUTEUR, BREVETS ET AUTRES DROITS DE PROPRIÉTÉ INTELLECTUELLE SONT RÉSERVÉS À V.W.T. L'ACCEPTATION DE LA LIVRAISON DU PRÉSENT DOCUMENT CONSTITUE UNE ENTENTE À L'EFFET QUE LES CONDITIONS ÉNONCÉES CI-DESSUS S'APPLIQUENT.

| | | |
|---|---|---|
| DESSINÉ DESIGNER | M.JACQUES | DATE 2019-02-12 |
| VÉRIFIÉ CHECKER | S.DUQUET | DATE 2019-02-12 |
| INGÉNIEUR ENGINEER | | DATE |
| ÉCHELLE/SCALE: | | |

TITRE/TITLE: HYDRAPOL 500 CONTROL PANEL
DRAWING LIST & LEGEND

CLIENT: IQALUIT WWTP

VEOLIA

VEOLIA WATER TECHNOLOGIES CANADA INC. 4105 Sartelon, Saint-Laurent, Qc, Canada. Tel: (514) 334-7230

| PROJET/PROJECT | DESSIN/DRAWING No | INTERNE/INTERNAL | FEUILLET/SHEET | REV. |
|---|---|---|---|---|
| 5000218036-EPL-0007-AUT-VWT | JOME01 | 2 DE 5 | | 4 |

STD: "D" 22x34 | EBI ELECTRIC - 58011-P02 | BAR = 1" À L'ÉCHELLE D'IMPRESSION/BAR = 1" AT PLOT SCALE

30-APR-2019 14:49:00 C:\Users\rmassicotte\Desktop\CAM\TO-DO\VWT\5000218036-EPL-0007-AUT-VWT-02.DWG

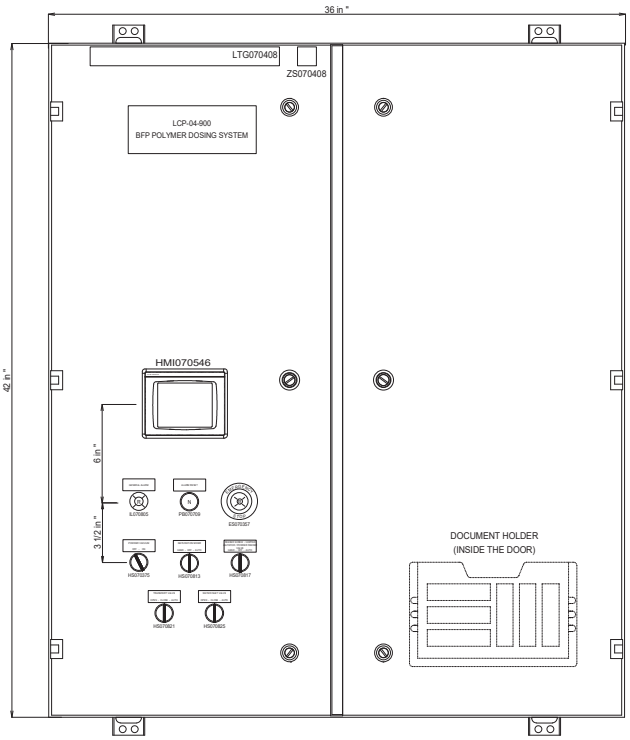


ENCLOSURE 42" x 36" x 12"

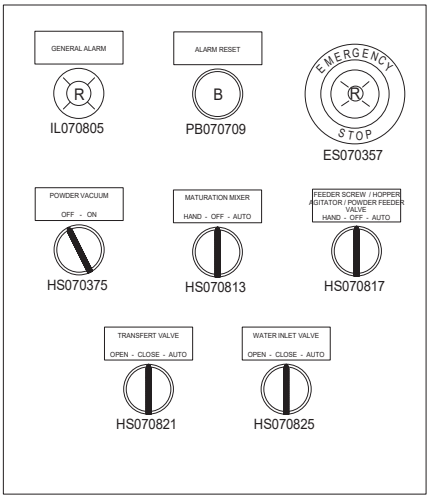


DOOR DETAILS

LR 60892

| REV. | DESCRIPTION | DATE | REV. | VER/CHK | APPR. | ECN |
|---|---|---|---|---|---|---|
| 4 | AS COMMISSIONNING | 2019-05-17 | SD | | | |
| 3 | AS BUILT | 2019-05-03 | SD | | | |
| 2 | FOR FAB | 2019-04-02 | RM | | | |
| 1 | FOR APPROVAL | 2019-03-18 | RM | | | |

CONFIDENTIALITY AND INTELLECTUAL PROPERTY NOTICE
ALL INFORMATION CONTAINED IN THIS DOCUMENT IS THE SOLE PROPERTY OF VEOLIA WATER TECHNOLOGIES CANADA INC. AND IS SUBJECT TO COPYRIGHT, PATENT AND OTHER INTELLECTUAL PROPERTY LAWS. THE DESIGN CONCEPTS AND INFORMATION CONTAINED HEREIN ARE PROPRIETARY TO V.E.W.T. AND ARE SUBMITTED IN CONFIDENCE. THIS DOCUMENT MAY NOT BE USED ONLY FOR THE PURPOSE FOR WHICH THE DOCUMENT IS BEIN SUBMITTED. WHEN NO IMPLICIT LICENCE IS GRANTED TO THE RECIPIENT. THIS DOCUMENT MAY NOT BE COPIED. THIS IS CONFIDENTIAL AND PRIVILEGED INFORMATION OF V.E.W.T. AND THEY MUST NOT BE DISCLOSED, REPRODUCED, LOANED, TRANSFERRED OR USED IN ANY WAY WITHOUT THE WRITTEN CONSENT OF V.E.W.T. IN ADDITION, V.E.W.T. DISCLAIMS RESPONSIBILITY OR LIABILITY FOR THE USE OF THIS DOCUMENT OR THIS DESIGN CONCEPTS AND INFORMATION CONTAINED HEREIN FOR ANY PURPOSE OTHER THAN THE PURPOSE FOR WHICH IT IS SUBMITTED. IN NO EVENT SHALL THIS DOCUMENT OR THE DESIGN CONCEPTS AND INFORMATION CONTAINED HEREIN BE DEEMED TO BE A GRANT OF LICENCE OR RIGHT OF V.E.W.T. ALL COPYRIGHT, PATENT AND OTHER INTELLECTUAL PROPERTY RIGHTS ARE RESERVED. ACCEPTANCE OF THE DELIVERY OF THIS DOCUMENT CONSTITUTES AGREEMENT TO THESE TERMS AND CONDITIONS.

AVIS DE CONFIDENTIALITÉ ET DE PROPRIÉTÉ INTELLECTUELLE
L'ENSEMBLE DES RENSEIGNEMENTS DU DOCUMENT EST LA PROPRIÉTÉ EXCLUSIVE DE VEOLIA WATER TECHNOLOGIES CANADA INC. ET EST SOUMIS À DES LOIS SUR LE DROIT D'AUTEUR ET SUR LA PROPRIÉTÉ INTELLECTUELLE. LES IDÉES CONCEPTUELLES CONTENUES DANS CE DOCUMENT SONT LA PROPRIÉTÉ DE V.E.W.T. ET SONT SOUMISES EN CONFIDENCE. CE DOCUMENT NE PEUT ÊTRE UTILISÉ QUE POUR LE BUT POUR LEQUEL IL EST SOUMIS. LORSQUE AUCUNE LICENCE NE SERA ACCORDÉE À LA PERSONNE À QUI IL EST SOUMIS. CE DOCUMENT NE PEUT ÊTRE COPIÉ. CE DOCUMENT EST UN RENSEIGNEMENT CONFIDENTIEL ET PRIVILÉGIÉ DONT LE DÉTENTEUR DE L'INFORMATION EST V.E.W.T. ET CE DOCUMENT NE PEUT ÊTRE DIVULGUÉ, REPRODUIT, PRÊTÉ, TRANSFÉRÉ OU UTILISÉ EN TOUTE AUTRE MANIÈRE SANS LE CONSENTEMENT ÉCRIT DE V.E.W.T. EN PLUS, V.E.W.T. DÉCLINE TOUTE RESPONSABILITÉ OU LIABILITÉ POUR TOUTE UTILISATION DE CE DOCUMENT OU DES IDÉES ET DES INFORMATIONS CONTENUES DANS CE DOCUMENT À DES FINS AUTRES QUE CELLES POUR LESQUELLES IL EST PRÉSENTÉ. EN AUCUN CAS CE DOCUMENT NI LES IDÉES ET DES INFORMATIONS CONTENUES DANS CE DOCUMENT NE SERONT CONSIDÉRÉS COMME UNE CESSION DE LICENCE OU DE DROIT D'AUTEUR À L'ÉGARD DE V.E.W.T. TOUS LES DROITS D'AUTEUR, DE BREVET ET DE PROPRIÉTÉ INTELLECTUELLE SONT RÉSERVÉS. L'ACCEPTATION DE LA LIVRAISON DE CE DOCUMENT CONSTITUE UNE ENTENTE À CES TERMES ET CONDITIONS.

| | | |
|---|---|---|
| DESSINÉ DESIGNER | M.JACQUES | DATE 2019-02-12 |
| VÉRIFIÉ CHECKER | S.DUQUET | DATE 2019-02-12 |
| INGÉNIEUR ENGINEER | | DATE |
| ÉCHELLE/SCALE: | | |

TITRE TITLE: HYDRAPOL 500 CONTROL PANEL OUTSIDE PANEL LAYOUT

CLIENT: IQALUIT WWTP

VEOLIA

VEOLIA WATER TECHNOLOGIES CANADA INC. 4105 Sartelon, Saint-Laurent, Qc, Canada. Tel: (514) 334-7230

| PROJET/PROJECT | DESSINATEUR/DRAWING No | INTERNE/INTERNAL | FEUILLE/SHEET | REV. |
|---|---|---|---|---|
| 5000218036-EPL-0007-AUT-VWT | JOME01 | 3 | DE 5 | 4 |

STD: "D" 22x34 | EBI ELECTRIC - 58011-P02 | BAR = 1" À L'ÉCHELLE D'IMPRESSION/BAR = 1" AT PLOT SCALE

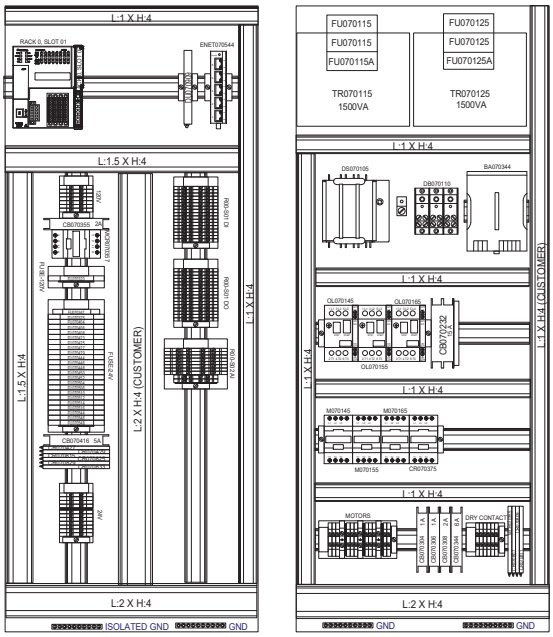


| | | | | | | | |
|---|---|---|---|---|---|---|---|
| 4 | AS COMMISSIONNING | 2019-05-17 | SD | | | | |
| 3 | AS BUILT | 2019-05-03 | SD | | | | |
| 2 | FOR FAB | 2019-04-02 | RM | | | | |
| 1 | FOR APPROVAL | 2019-03-18 | RM | | | | |
| | | | | | | | |
| | | | | | | | |
| REV. | DESCRIPTION | DATE | REV. | VERIF/CHK | APPR | ECN | |

CONFIDENTIALITY AND INTELLECTUAL PROPERTY NOTICE
ALL INFORMATION CONTAINED IN THIS DOCUMENT IS THE SOLE PROPERTY OF VEOLIA WATER TECHNOLOGIES CANADA INC. AND MAY CONTAIN CONFIDENTIAL, PROPRIETARY AND/OR OTHER INTELLECTUAL PROPERTY LAWS. THE DESIGN CONCEPTS AND INFORMATION CONTAINED HEREIN ARE PROPRIETARY TO V.W.T. AND ARE SUBMITTED IN CONFIDENCE. THIS DOCUMENT AND THE INFORMATION MUST BE USED ONLY FOR THE PURPOSE FOR WHICH THE DOCUMENT IS IS EXPRESSLY SUBMITTED AND NO IMPLICIT LICENCE IS GRANTED BY THE SUBMISSION OF THIS DOCUMENT. THIS DOCUMENT IS STRICTLY CONFIDENTIAL AND PRI VILEGED INFORMATION OF V.W.T. AND THEY MUST NOT BE DISCLOSED, REPRODUCED, LOANED, INSETTED OR USED IN WHOLE OR IN PART FOR ANY PURPOSE WITHOUT THE EXPRESS WRITTEN CONSENT OF V.W.T. V.W.T. ASSUMES NO RESPONSIBILITY OR LIABILITY FOR THE USE OF THIS DOCUMENT OR THE DESIGN CONCEPTS AND INFORMATION CONTAINED HEREIN FOR PURPOSES OTHER THAN THE SPECIFIC PROJECT RELATED TO THE OTHER OUR PURPOSE OF THIS DOCUMENT. IN NO EVENT SHALL THIS DOCUMENT OR THE DESIGN CONCEPTS AND INFORMATION CONTAINED HEREIN BE USED BY ANY PERSON FOR ANY PURPOSE OTHER THAN THE SPECIFIC PROJECT FOR WHICH IT WAS PROVIDED. UNDER THE LAWS OF V.W.T. ALL COPYRIGHT, PATENT AND OTHER INTELLECTUAL PROPERTY RIGHTS ARE RESERVED. ACCEPTANCE OF THE DELIVERY OF THIS DOCUMENT CONSTITUTES AGREEMENT TO THESE TERMS AND CONDITIONS.

AVIS DE CONFIDENTIALITÉ ET DE PROPRIÉTÉ INTELLECTUELLE
L'INFORMATION CONTENUE DANS CE DOCUMENT EST LA PROPRIÉTÉ EXCLUSIVE DE VEOLIA WATER TECHNOLOGIES CANADA INC. ET PEUT CONTENIR DES LOIS DE NATURE CONFIDENTIELLE, PROPRIÉTAIRE ET AUTRE DE PROPRIÉTÉ INTELLECTUELLE. LES IDÉES ET CONCEPTS D'INFORMATION CONTENUS DANS CE DOCUMENT SONT CONFIDENTIELS ET SOUMIS EN CONFIDENCE. CE DOCUMENT ET L'INFORMATION DOIVENT ÊTRE UTILISÉS EXCLUSIVEMENT AUX FINS POUR LESQUELLES CE DOCUMENT EST SOUMIS ET AUCUNE LICENCE IMPLICITE N'EST ACCORDÉE EN SOUMETTANT CE DOCUMENT. CE DOCUMENT EST STRICTEMENT CONFIDENTIEL ET CONTIENT DES RENSEIGNEMENTS PRIVILÉGIÉS DE V.W.T. ET CES DERNIERS NE DOIVENT PAS ÊTRE DIVULGUÉS, REPRODUITS, PRÊTÉS, RÉDIGÉS OU UTILISÉS EN TOUTE OU EN PARTIE À QUELQUE FIN QUE CE SOIT SANS LE CONSENTEMENT ÉCRIT DE V.W.T. V.W.T. N'ASSUME AUCUNE RESPONSABILITÉ OU RESPONSABILITÉ POUR L'UTILISATION DE CE DOCUMENT OU DES CONCEPTS DE CONCEPTION ET DES INFORMATIONS CONTENUES DANS LES PRÉSENTES À DES FINS AUTRES QUE LE PROJET SPÉCIFIQUE LIÉ À L'AUTRE OBJET DE CE DOCUMENT. EN AUCUN CAS CE DOCUMENT OU LES CONCEPTS DE CONCEPTION ET L'INFORMATION QU'IL CONTIENT NE DOIVENT ÊTRE UTILISÉS PAR UNE PERSONNE À DES FINS AUTRES QUE CELLES POUR LESQUELLES IL A ÉTÉ FOURNI. TOUS LES DROITS D'AUTEUR, BREVET ET AUTRES DROITS DE PROPRIÉTÉ INTELLECTUELLE SONT RÉSERVÉS EN VERTU DES LOIS DE V.W.T. L'ACCEPTATION DE LA LIVRAISON DE CE DOCUMENT CONSTITUE UNE ENTENTE À CES CONDITIONS ET AVIS.

| | | |
|---|---|---|
| DESSINÉ DESIGNER | M.JACQUES | 2019-02-12 |
| VÉRIFIÉ CHECKER | S.DUQUET | 2019-02-12 |
| INGÉNIEUR ENGINEER | | |

TITRE TITLE: HYDRAPOL 500 CONTROL PANEL INSIDE PANEL LAYOUT

CLIENT: IQALUIT WWTP

VEOLIA

VEOLIA WATER TECHNOLOGIES CANADA INC. 4105 Sartelon, Saint-Laurent, Qc, Canada. Tel: (514) 334-7230

| PROJET/PROJECT | DESSIN/DRAWING No | INTERNE/INTERNAL | FEUILLET/SHEET | REV. |
|---|---|---|---|---|
| 5000218036-EPL-0007-AUT-VWT | JOME01 | 4 DE 5 | | 4 |

ECHELLE/SCALE:

LR 60892

STD: "D" 22x34 | EBI ELECTRIC - 58011-P02 | BAR = 1" À L'ÉCHELLE D'IMPRESSION/BAR = 1" AT PLOT SCALE

Mai/07 2019, 11:49:00 C:\Users\mjacques\Desktop\CAM\CAD-CHE-QVTC-R&T\DWG\5000218036-EPL-0007-AUT-VWT-R04.dwg

| Items | Qty | Part Number | Description | Manufacturer |
|---|---|---|---|---|
| ENCLOSURE | 1 | !SP1404283 | Special Enclosure 42" x 36" x 12" | Hammond |
| ENCLOSURE | 1 | BOIHAMPKT99 | Document Holder | Hammond |
| LTG070408 | 1 | !RABUC-LED300-NW | LED Bar 300mm, 3 watts, 24 vdc (88861) | RAB |
| ZS070408 | 1 | BOIHAMFDS1 | Door Switch for Light | Hammond |
| DS070105 | 1 | !TELGS1DU3 | Fused Disconnect Switch 30A/600V (Fus. Type J | Schneider Electric |
| DS070105 | 1 | !TELGS2AE8 | Operating Shaft 30a 12.6" | Schneider Electric |
| DS070105 | 1 | !TELGS2AH420 | Operating Handle Red / Yellow NEMA 4-4X | Schneider |
| DS070105 | 3 | FUSAJT15 | Fuse 15 amp.Type J Time Delay | Mersen |
| DB070110 | 3 | KCONMPDBC6263 | Protective Cover for Distribution Block | Mersen |
| DB070110 | 1 | KCONMPDB63133 | Distribution Block | Mersen |
| OL070145 | 1 | TELGV2ME05 | Manual Starter 0,63-1A | Schneider Electric |
| OL070145 | 1 | TELGVAN20 | Aux Contact for GV2, GV3P, 2NO | Schneider Electric |
| M070145 | 1 | TELLC1D09BD | Contactor 7,5HP/600V 1NO-1NF 24VDC | Schneider Electric |
| M070145 | 1 | KTELLADN20 | Aux Contact 2NO | Schneider Electric |
| OL070155 | 1 | TELGV2ME05 | Manual Starter 0,63-1A | Schneider Electric |
| OL070155 | 1 | TELGVAN20 | Aux Contact for GV2, GV3P, 2NO | Schneider Electric |
| M070155 | 1 | TELLC1D09BD | Contactor 7,5HP/600V 1NO-1NF 24VDC | Schneider Electric |
| M070155 | 1 | KTELLADN20 | Aux Contact 2NO | Schneider Electric |
| OL070165 | 1 | TELGV2ME06 | Manual Starter 1-1,6A | Schneider Electric |
| OL070165 | 1 | TELGVAN20 | Aux Contact forGV2, GV3P, 2NO | Schneider Electric |
| M070165 | 1 | TELLC1D09BD | Contactor 7,5HP/600V 1NO-1NF 24VDC | Schneider Electric |
| M070165 | 1 | KTELLADN20 | Aux Contact 2NO | Schneider Electric |
| CB070232 | 1 | !SU202M-C15 | Breaker 15A 2 poles | ABB |
| CR070375 | 1 | TELLC1D09BD | Contactor 7,5HP/600V 1NO-1NF 24VDC | Schneider Electric |
| TR070115 | 1 | !TRASQD9070FB3B | Fuse Holder for XFO (Primairy + Secondairy) | Schneider Electric |
| FU070115 | 2 | FUSATQR5 | Fuse 5 amp, CC, 600 v, Time Delay | Mersen |
| FU070115A | 1 | FUSATDR15 | Fuse 15 amp, CC, 600 v, Time Delay | Mersen |
| TR070115 | 1 | KSQD9070FSC2 | Protective Cover for Transformer | Schneider Electric |
| TR070115 | 3 | !SPL0001T | Protective Cover for Fuse Holder | Littelfuse |
| TR070115 | 1 | TRASQD9070T1500D5 | Transformer 1500 va 600/120 v. | Schneider Electric |
| TR070125 | 1 | !TRASQD9070FB3B | Fuse Holder for XFO (Primairy + Secondairy) | Schneider Electric |
| FU070125 | 2 | FUSATQR5 | Fuse 5 amp, CC, 600 v, Time Delay | Mersen |
| TR070125 | 1 | KSQD9070FSC2 | Protective Cover for Transformer | Schneider Electric |
| TR070125 | 3 | !SPL0001T | Protective Cover for Fuse Holder | Littelfuse |
| TR070125 | 1 | !TRASQD9070T1500D37 | Transformer 1500 va 600/120-240v v. | Schneider Electric |
| FU070125A | 1 | ABBE9230CC | Fuse Holder 30 amp, IP20, 2 poles, type CC | ABB |
| FU070125A | 2 | FUSATDR15 | Fuse 15 amp, CC, 600 v, Time Delay | Mersen |
| BA070344 | 1 | OMRS8VK-G48024 | Power Supply 24 vcc 20 amp. | Omron |
| RELAYS | 8 | OMRG2RV-SL700 DC24 | Control Relay 6 mm, 6 amp, 24 vdc | Omron |
| RELAYS | 1 | KOMRP2RVM-200B | Connecting Bar 20 poles for G2RV | Omron |
| CR070821 | 1 | OMRG2R-1-SN-DC24 (S) | Relais 1 pôle 24 vca c/a témoin | Omron |
| CR070821 | 1 | OMRP2RF-05-E | Base de relais type G2R-1 | Omron |
| MCR070357 | 1 | TELCAD50BD | Relay 10A 5NO 24VCC | Schneider Electric |
| HMI070546 | 1 | 2711P-T4W21D8S | PanelView Plus 7 4.3" | Allen-Bradley |
| PLC | 1 | 1769-L16ER-BB1B | PLC | Allen-Bradley |
| PLC | 1 | 1734-IE8C | Analog Input Card | Allen-Bradley |
| PLC | 1 | 1734-TB | Point I/O terminal base | Allen-Bradley |
| DU070909 | 1 | 7920400000 | Duplicateur signal 4-20mA | Weidmuller |
| ENET070544 | 1 | TELTCSESU053FN0 | Ethernet Switch 5 ports | Schneider Electric |
| HS070375 | 1 | KTELZB4BD2 | Selector 2 Position Maintained | Schneider Electric |
| HS070375 | 1 | KTELZB4BZ101 | Contact Block 1NO | Schneider Electric |
| HS070813 | 4 | KTELZB4BD3 | Selector 3 Position Maintained | Schneider Electric |
| HS070813 | 4 | KTELZB4BZ103 | Contact Block 2NO | Schneider Electric |
| HS070813 | 4 | KTELZBE101 | Contact Block 1NO | Schneider Electric |
| IL070805 | 1 | KTELZB4BV043 | Pilot Light Red (LED) | Schneider Electric |
| IL070805 | 1 | TELZB4BVB4 | Mounting Block with Light, LED 24V Red | Schneider Electric |
| ES070357 | 1 | TELZB4BW643 | Red Lit Mushroom Button | Schneider Electric |
| ES070357 | 1 | TELZB4BVB4 | Mounting Block with Light, LED 24V Red | Schneider Electric |
| ES070357 | 1 | KTELZBE101 | Contact Block 1NO | Schneider Electric |
| ES070357 | 1 | KTELZBE102 | Contact Block 1NC | Schneider Electric |
| ES070357 | 1 | KTELZBY9320 | Round EMERGENCY STOP Label | Schneider Electric |
| PB070709 | 1 | KTELZB4BA2 | Black Flush Button | Schneider Electric |
| PB070709 | 1 | KTELZB4BZ101 | Contact Block 1NO | Schneider Electric |
| GND | 3 | KN8020A108T | Grounding Bar 10 Holes | Ilsco |
| TERMINAL BLOCKS | 37 | ENT1SNK506010R0000 | Terminal Block 30 amp. 6mm | ABB |
| TERMINAL BLOCKS | 5 | ENT1SNK505910R0000 | End Cover | ABB |
| TERMINAL BLOCKS | 32 | ENT1SNK505210R0000 | Terminal Block 2 Levels 5 mm | ABB |
| TERMINAL BLOCKS | 2 | ENT1SNK505960R0000 | End Cover | ABB |
| TERMINAL BLOCKS | 8 | ENT1SNK505212R0000 | Terminal Block 3 Levels | ABB |
| TERMINAL BLOCKS | 1 | ENT1SNK505961R0000 | End Cover | ABB |
| FUSE | 1 | ENT1SNK508418R0000 | Fuse Holder 1/4" x 1 1/4" | ABB |
| FUSE | 23 | ENT1SNK508425R0000 | Fuse Terminal Block 2 Level | ABB |
| FUSE | 1 | ENT1SNK508911R0000 | End Cover | ABB |
| FUSE | 24 | KFUSGMA2 | Fuse 250 v. 2 amp. M5 x 20 | Bussmann |
| FUSE | 4 | FUSGMA5 | Fuse 125 v. 5 amp. M5 x 20 | Bussmann |
| FUSE | 5 | KFUSGMA1 | Fuse 250 v. 1 amp. M5 x 20 | Bussmann |
| FUSE | 4 | FUSGMA3 | Fuse 250 v. 3 amp. M5 x 20 | Bussmann |
| FUSE | 5 | FUSABC20 | Fuse 250 v. 20 amp. 1/4 x 1 1/4 | Bussmann |
| TERMINAL BLOCKS | 14 | ENT1SNK900002R0000 | End Stop | ABB |
| CB070304, CB070306 | 2 | !SU201M-C1 | Breaker 1A | ABB |
| CB070308, CB070355 | 2 | !SU201M-C2 | Breaker 2A | ABB |
| CB070416 | 1 | !SU201M-C5 | Breaker 5A | ABB |
| CB070344 | 1 | !SU201M-C6 | Breaker 6A | ABB |
| PATCH CORD | 1 | !CAT5ES-06GN | Ethernet Cable RJ45, 6 ft, Green | Infinite cables |

LR 60892

| REV. | DESCRIPTION | DATE | REV. | VERIF/CHK | APPR. | ECN |
|---|---|---|---|---|---|---|
| 4 | AS COMMISSIONNING | 2019-05-17 | SD | | | |
| 3 | AS BUILT | 2019-05-03 | SD | | | |
| 2 | FOR FAB | 2019-04-02 | RM | | | |
| 1 | FOR APPROVAL | 2019-03-18 | RM | | | |

CONFIDENTIALITY AND INTELLECTUAL PROPERTY NOTICE: ALL INFORMATION CONTAINED IN THIS DOCUMENT IS THE SOLE PROPERTY OF VEOLIA WATER TECHNOLOGIES CANADA INC. AND CONTAINS CONFIDENTIAL AND PROPRIETARY INFORMATION AND OTHER INTELLECTUAL PROPERTY LAWS. THE DESIGN CONCEPTS AND INFORMATION CONTAINED HEREIN ARE PROPRIETARY TO "I.S.T." AND ARE SUBMITTED IN CONFIDENCE. THIS DOCUMENT AND THE INFORMATION MUST BE USED ONLY FOR THE PURPOSE FOR WHICH THE DOCUMENT IS IN POSSESSION. IT SUBMITTED AND NO IMPLICIT LICENCE IS GRANTED TO USE THE DESIGN CONCEPTS CONTAINED HEREIN. THIS DOCUMENT IS CONFIDENTIAL AND PRIVILEGED INFORMATION OF I.S.T. AND THEY MUST NOT BE DISCLOSED, REPRODUCED, LOANED, WRITTEN OR USED IN WHOLE OR IN PART FOR THE BENEFIT OF ANYONE OTHER THAN I.S.T. I.S.T. ASSUMES NO RESPONSIBILITY OR LIABILITY FOR THE USE OF THIS DOCUMENT OR THE DESIGN CONCEPTS AND INFORMATION CONTAINED HEREIN FOR PURPOSES OTHER THAN THE PURPOSE WHICH RELATE TO THE OTHERWISE PURPOSE OF THIS DOCUMENT. IN NO EVENT SHALL THIS DOCUMENT OR THE DESIGN CONCEPTS AND INFORMATION CONTAINED HEREIN BE USED BY ANY PERSON FOR ANY PURPOSE OTHER THAN THE PURPOSE OF I.S.T. ALL COPYRIGHT, PATENT AND OTHER INTELLECTUAL PROPERTY RIGHTS ARE RESERVED. ACCEPTANCE OF THE DELIVERY OF THIS DOCUMENT CONSTITUTES AGREEMENT TO THESE TERMS AND CONDITIONS.

AVIS DE CONFIDENTIALITÉ ET DE PROPRIÉTÉ INTELLECTUELLE : LES RENSEIGNEMENTS CONTENUS DANS CE DOCUMENT SONT LA PROPRIÉTÉ EXCLUSIVE DE VEOLIA WATER TECHNOLOGIES CANADA INC. ET CONTIENNENT DES RENSEIGNEMENTS CONFIDENTIELS ET DE PROPRIÉTÉ INTELLECTUELLE. LES IDÉES ET CONCEPTS D'INGÉNIERIE CONTENUS DANS CE DOCUMENT SONT CONFIDENTIELS ET C'EST POURQUOI ILS SONT SOUMIS À LA CONDITION QU'ILS NE SERVENT QU'AUX FINS POUR LESQUELLES ILS SONT DESTINÉS. UNE LICENCE IMPLICITE N'EST ACCORDÉE À PERSONNE D'UTILISER LES IDÉES ET CONCEPTS D'INGÉNIERIE CONTENUS DANS CE DOCUMENT. CE DOCUMENT CONTIENT DES RENSEIGNEMENTS CONFIDENTIELS ET PRIVILÉGIÉS D'I.S.T. ET NE DOIVENT PAS ÊTRE DIVULGUÉS, REPRODUITS, PRÊTÉS, RÉDIGÉS OU UTILISÉS EN TOUTE OU EN PARTIE AU PROFIT DE QUICONQUE D'AUTRE QUE I.S.T. I.S.T. N'ASSUME AUCUNE RESPONSABILITÉ OU OBLIGATION QUANT À L'UTILISATION DE CE DOCUMENT AINSI QUE DES IDÉES ET CONCEPTS D'INGÉNIERIE CONTENUS DANS LES PRÉSENTES À DES FINS AUTRES QUE CELLES QUI SONT LIÉES À L'OBJET DE CE DOCUMENT. EN AUCUN CAS CE DOCUMENT OU LES IDÉES ET CONCEPTS D'INGÉNIERIE QUI Y SONT CONTENUS NE DOIVENT ÊTRE UTILISÉS PAR QUICONQUE À DES FINS AUTRES QUE CELLES QUI SONT LIÉES À L'OBJET DE CE DOCUMENT. TOUS LES DROITS D'AUTEUR, BREVETS ET AUTRES DROITS DE PROPRIÉTÉ INTELLECTUELLE SONT RÉSERVÉS. L'ACCEPTATION DE LA LIVRAISON DE CE DOCUMENT CONSTITUE UNE ACCEPTATION DE CES CONDITIONS.

| | | | |
|---|---|---|---|
| DESSINÉ DESIGNER | M.JACQUES | DATE | 2019-02-12 |
| VÉRIFIÉ CHECKER | S.DUQUET | DATE | 2019-02-12 |
| INGÉNIEUR ENGINEER | | DATE | |
| ÉCHELLE/SCALE: | | | |

TITRE/TITLE: HYDRAPOL 500 CONTROL PANEL PARTS LIST

CLIENT: IQALUIT WWTP

VEOLIA WATER TECHNOLOGIES CANADA INC. 4105 Sartelon, Saint-Laurent, Qc, Canada. Tel: (514) 334-7230

| PROJET/PROJECT | DESSIN/DRAWING No | INTERNE/INTERNAL | FEUILLET/SHEET | REV. |
|---|---|---|---|---|
| 5000218036-EPL-0007-AUT-VWT | JOME01 | 5 DE 5 | | 4 |

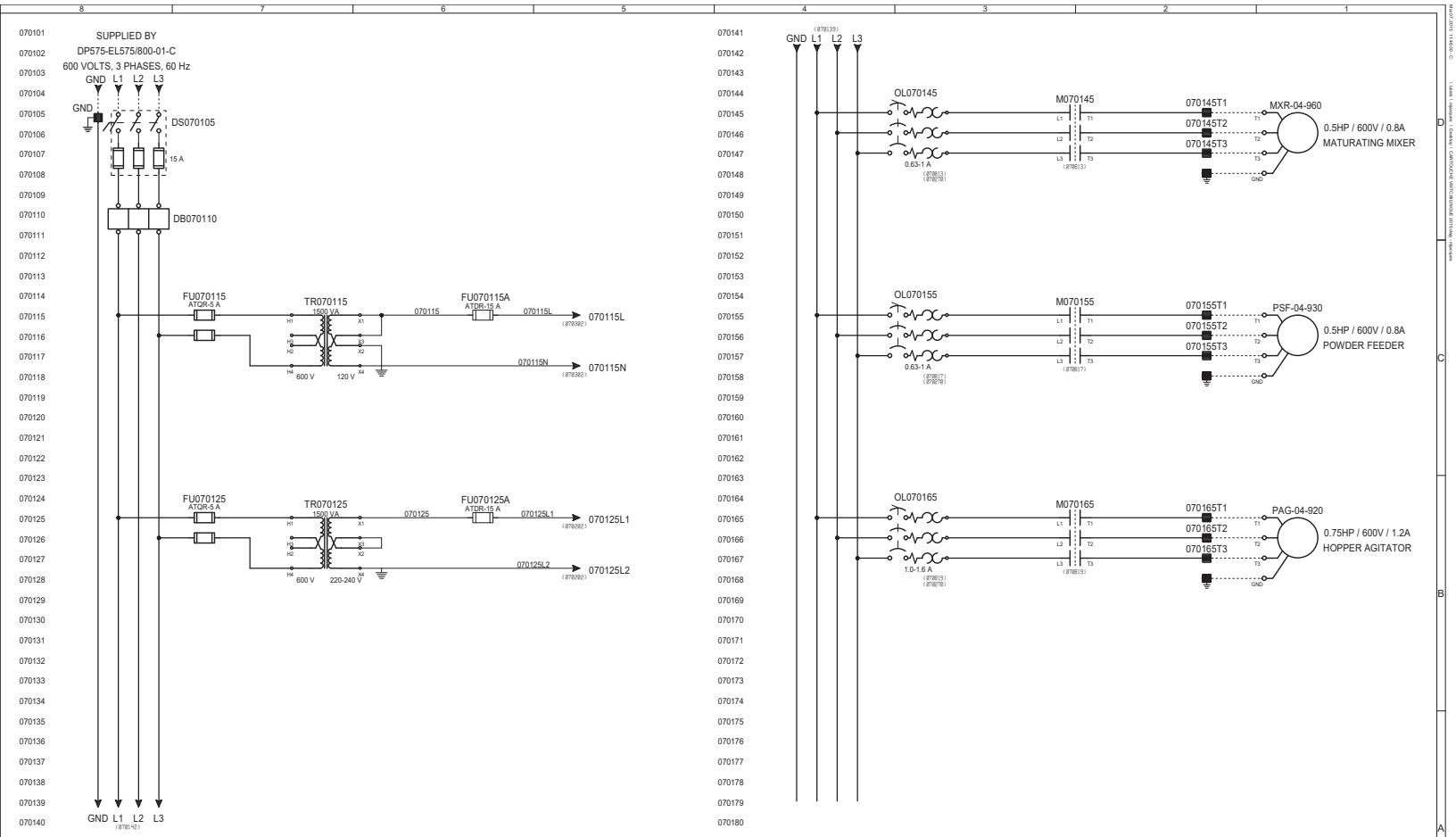


| | | | | | | | |
|---|---|---|---|---|---|---|---|
| 4 | AS COMMISSIONNING | 2019-05-17 | SD | | | | |
| 3 | AS BUILT | 2019-05-03 | SD | | | | |
| 2 | FOR FAB | 2019-04-02 | RM | | | | |
| 1 | FOR APPROVAL | 2019-03-18 | RM | | | | |
| | | | | | | | |
| | | | | | | | |
| REV. | DESCRIPTION | DATE | REV. | VERIF/CHK | APPR | ECN | |

CONFIDENTIALITY AND INTELLECTUAL PROPERTY NOTICE
ALL INFORMATION CONTAINED IN THIS DOCUMENT IS THE SOLE PROPERTY OF VEOLIA WATER TECHNOLOGIES CANADA INC. AND CONTAINS CONFIDENTIAL AND PROPRIETARY INFORMATION AND OTHER INTELLECTUAL PROPERTY LAWS. THE DESIGN CONCEPTS AND INFORMATION CONTAINED HEREIN ARE PROPRIETARY TO "I.D.C" AND ARE SUBMITTED IN CONFIDENCE. NEITHER THIS DOCUMENT NOR ANY PART MUST BE USED ONLY FOR THE PURPOSE FOR WHICH THE DOCUMENT IS EXPRESSLY SUBMITTED AND NO DUPLICATE LICENCE IS GRANTED OR IMPLIED. THIS DOCUMENT MUST NOT BE COPIED AND THE CONTENTS, CONFIDENTIAL AND PRIVILEGED INFORMATION OF I.D.C.", AND THEY MUST NOT BE DISCLOSED, REPRODUCED, LOANED, WHETTED OR USED IN WHOLE OR IN PART FOR ANY PURPOSE WITHOUT THE PERMISSION OF I.D.C. I.D.C. ASSUMES NO RESPONSIBILITY OR LIABILITY FOR THE USE OF THIS DOCUMENT OR THE DESIGN CONCEPTS AND INFORMATION CONTAINED HEREIN FOR PURPOSES OTHER THAN THE SPECIFIC PROJECT RELATED TO THE ATTACHED OR PURPOSES OF THIS DOCUMENT. IN NO EVENT SHALL THIS DOCUMENT OR THE DESIGN CONCEPTS AND INFORMATION CONTAINED HEREIN BE USED BY ANY PARTY FOR ANY PURPOSE IN VIOLATION OF I.D.C.'S ALL COPYRIGHT, PATENT AND OTHER INTELLECTUAL PROPERTY RIGHTS ARE RESERVED. ACCEPTANCE OF THE DELIVERY OF THIS DOCUMENT CONSTITUTES AGREEMENT TO THESE TERMS AND CONDITIONS.

AVIS DE CONFIDENTIALITÉ ET DE PROPRIÉTÉ INTELLECTUELLE
L'INFORMATION CONTENUE DANS CE DOCUMENT EST LA PROPRIÉTÉ EXCLUSIVE DE VEOLIA WATER TECHNOLOGIES CANADA INC. ET CONTIENT DES LOIS DE PROPRIÉTÉ INTELLECTUELLE ET AUTRES. LES IDÉES ET LES CONCEPTS DE CONCEPTION ET L'INFORMATION CONTENUE DANS CE DOCUMENT SONT LA PROPRIÉTÉ DE "I.D.C." ET SONT SOUMIS EN CONFIDENCE. NI CE DOCUMENT NI AUCUNE PARTIE NE DOIVENT ÊTRE UTILISÉS UNIQUEMENT AUX FINS POUR LESQUELLES CE DOCUMENT EST EXPRESSÉMENT SOUMIS ET AUCUNE LICENCE DUPLIQUÉE N'EST ACCORDÉE OU IMPLIQUÉE. CE DOCUMENT NE DOIT PAS ÊTRE COPIÉ ET LE CONTENU, L'INFORMATION CONFIDENTIELLE ET PRIVILÉGIÉE DOIVENT NE PAS ÊTRE DIVULGUÉS, REPRODUITS, PRÊTÉS, RÉDIGÉS OU UTILISÉS EN TOUTE OU EN PARTIE À QUELQUE FIN QUE CE SOIT SANS LA PERMISSION DE I.D.C. I.D.C. DÉCLINE TOUTE RESPONSABILITÉ OU RESPONSABILITÉ À L'ÉGARD DE L'UTILISATION DE CE DOCUMENT AINSI QUE DES IDÉES ET DES CONCEPTS DE CONCEPTION CONTENUS DANS LES PRÉSENTES À DES FINS AUTRES QUE CELLES LIÉES AU PROJET SPÉCIFIQUE CI-JOINT OU AUX FINS DE CE DOCUMENT. EN AUCUN CAS CE DOCUMENT NI LES IDÉES ET CONCEPTS DE CONCEPTION QUI Y SONT CONTENUS NE DOIVENT ÊTRE UTILISÉS PAR UNE PARTIE QUELCONQUE D'UNE MANIÈRE QUI ENFREINT LES DROITS D'AUTEUR, LES BREVETS ET LES AUTRES DROITS DE PROPRIÉTÉ INTELLECTUELLE D'I.D.C. TOUS DROITS RÉSERVÉS. L'ACCEPTATION DE LA LIVRAISON DE CE DOCUMENT CONSTITUE UNE ENTENTE À CES CONDITIONS ET MODALITÉS.

| | |
|---|---|
| DESSINÉ DESIGNER | M.JACQUES |
| DATE | 2019-02-12 |
| VÉRIFIÉ CHECKER | S.DUQUET |
| DATE | 2019-02-12 |
| INGÉNIEUR ENGINEER | |
| DATE | |
| ECHELLE/SCALE: | |

TITRE/TITLE: HYDRAPOL 500 CONTROL PANEL SCHEMATIC DIAGRAM 600VAC

CLIENT: IQALUIT WWTP

VEOLIA

VEOLIA WATER TECHNOLOGIES CANADA INC. 4105 Sartelon, Saint-Laurent, Qc, Canada. Tel: (514) 334-7230

| PROJET/PROJECT | DESSIN/DRAWING No | INTERNE/INTERNAL | FEUILLET/SHEET | REV. |
|---|---|---|---|---|
| 5000218036-ELD-0007-AUT-VWT | JOME01 | 1 DE 9 | 4 | |

LR 60892

STD: "D" 22x34 | EBI ELECTRIC - 58011-P02 | BAR = 1" À L'ÉCHELLE D'IMPRESSION/BAR = 1" AT PLOT SCALE

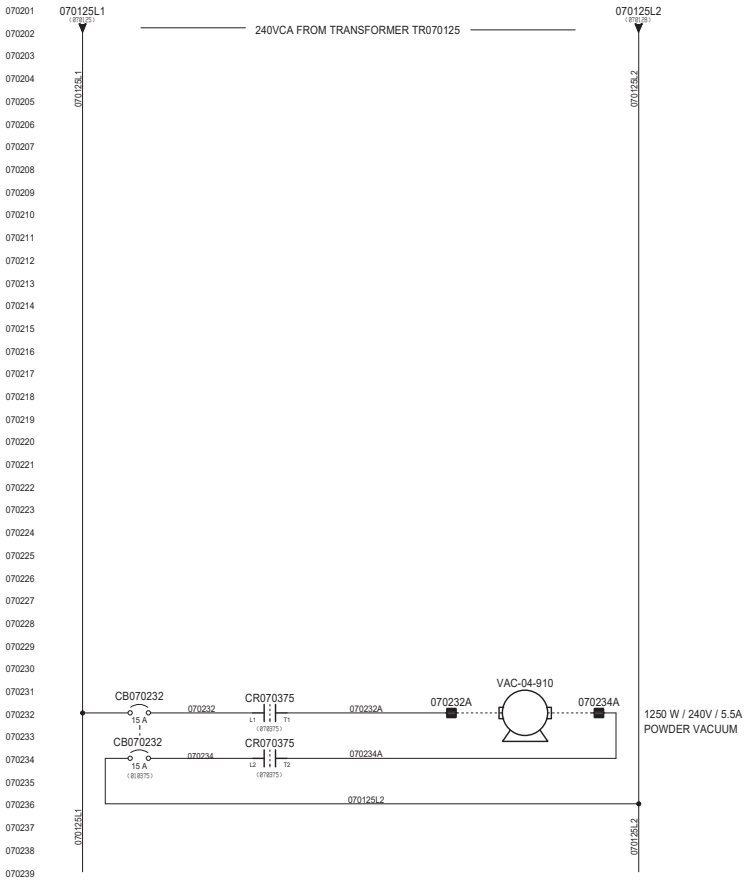


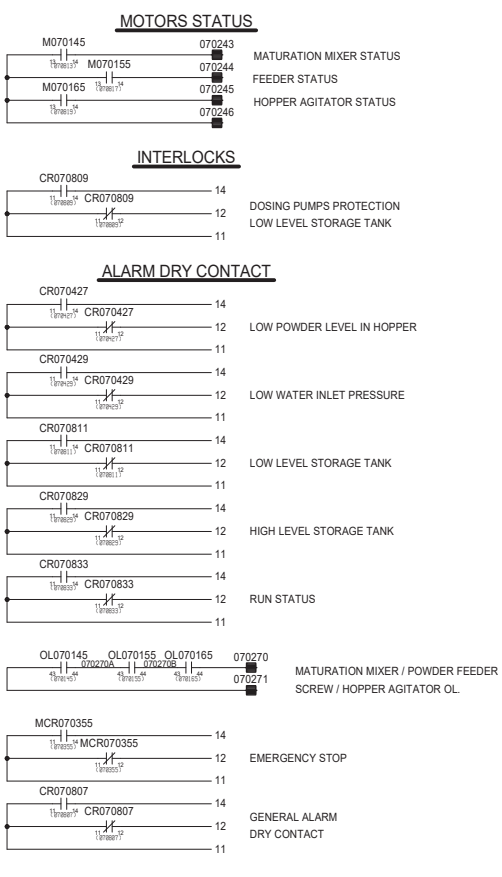


| REV. | DESCRIPTION | DATE | REV. | VERIF/CHK | APPR | ECN |
|---|---|---|---|---|---|---|
| 4 | AS COMMISSIONNING | 2019-05-17 | SD | | | |
| 3 | AS BUILT | 2019-05-03 | SD | | | |
| 2 | FOR FAB | 2019-04-02 | RM | | | |
| 1 | FOR APPROVAL | 2019-03-18 | RM | | | |

CONFIDENTIALITY AND INTELLECTUAL PROPERTY NOTICE
ALL INFORMATION CONTAINED IN THIS DOCUMENT IS THE SOLE PROPERTY OF VEOLIA WATER TECHNOLOGIES CANADA INC. AND CONTAINS CONFIDENTIAL AND PROPRIETARY INFORMATION AND OTHER INTELLECTUAL PROPERTY LAWS. THE DESIGN CONCEPTS AND INFORMATION CONTAINED HEREIN ARE PROPRIETARY TO "I.D.C." AND ARE CONFIDENTIAL AND PROTECTED BY COPYRIGHT LAWS. THIS DOCUMENT MUST BE USED ONLY FOR THE PURPOSE FOR WHICH THE DOCUMENT IS EXPRESSLY SUBMITTED AND NO IMPLICIT LICENCE IS GRANTED TO THE USE OF THE DESIGN CONCEPTS AND INFORMATION OF THIS CONFIDENTIAL AND PROPRIETARY INFORMATION OF I.D.C. AND THEY MUST NOT BE DISCLOSED, REPRODUCED, LOANED, INSERTED OR USED IN WHOLE OR IN PART FOR ANY PURPOSE WHATSOEVER WITHOUT THE PRIOR WRITTEN CONSENT OF I.D.C. I.D.C. ASSUMES NO RESPONSIBILITY OR LIABILITY FOR THE USE OF THIS DOCUMENT OR THE DESIGN CONCEPTS AND INFORMATION CONTAINED HEREIN FOR PURPOSES OTHER THAN THE SPECIFIC PROJECT RELATED TO THE OTHERWISE PURPOSE OF THIS DOCUMENT. IN NO EVENT SHALL THIS DOCUMENT OR THE DESIGN CONCEPTS AND INFORMATION CONTAINED HEREIN BE CONSTRUED AS RELATING TO ANY MANNER OF USE OF I.D.C. ALL COPYRIGHT, PATENT AND OTHER INTELLECTUAL PROPERTY RIGHTS ARE RESERVED. ACCEPTANCE OF THE DELIVERY OF THIS DOCUMENT CONSTITUTES AGREEMENT TO THESE TERMS AND CONDITIONS.

AVIS DE CONFIDENTIALITÉ ET DE PROPRIÉTÉ INTELLECTUELLE
L'INFORMATION CONTENUE DANS CE DOCUMENT EST LA PROPRIÉTÉ EXCLUSIVE DE VEOLIA WATER TECHNOLOGIES CANADA INC. ET CONTIENT DES INFORMATIONS CONFIDENTIELLES ET PROPRIÉTAIRES ET D'AUTRES DROITS DE PROPRIÉTÉ INTELLECTUELLE. LES DESIGN CONCEPTS ET INFORMATIONS CONTENUS DANS CE DOCUMENT SONT CONFIDENTIELS ET DE PROPRIÉTÉ EXCLUSIVE DE I.D.C. ET SONT PROTÉGÉS PAR DES LOIS SUR LES DROITS D'AUTEUR. CE DOCUMENT DOIT UNIQUEMENT ÊTRE UTILISÉ EXCLUSIVEMENT AUX FINS POUR LESQUELLES CE DOCUMENT EST EXPRESSÉMENT SOUMIS ET AUCUNE LICENCE IMPLICITE N'EST OCTROYÉE DE L'UTILISATION DES CONCEPTS DE DESIGN ET DES INFORMATIONS CONTENUES DANS CE DOCUMENT CONFIDENTIEL ET DE PROPRIÉTÉ EXCLUSIVE DE I.D.C. ET CES DERNIERS NE DOIVENT PAS ÊTRE DIVULGUÉS, REPRODUITS, PRÊTÉS, INSÉRÉS OU UTILISÉS EN TOUTE OU EN PARTIE À QUELQUE FIN QUE CE SOIT SANS LE CONSENTEMENT PRÉALABLE ÉCRIT DE I.D.C. I.D.C. N'ASSUME AUCUNE RESPONSABILITÉ OU RESPONSABILITÉ POUR L'UTILISATION DE CE DOCUMENT OU DES CONCEPTS DE DESIGN ET DES INFORMATIONS QUI Y SONT CONTENUES À DES FINS AUTRES QUE CELLES SPÉCIFIQUES AU PROJET LIÉ À L'OBJET DE CE DOCUMENT. EN AUCUN CAS CE DOCUMENT NE DOIT ÊTRE INTERPRÉTÉ COMME SE RAPPORTANT À UNE QUELCONQUE MANIÈRE D'UTILISER LES CONCEPTS DE DESIGN ET LES INFORMATIONS CONTENUES DANS CE DOCUMENT. TOUS LES DROITS D'AUTEUR, BREVETS ET AUTRES DROITS DE PROPRIÉTÉ INTELLECTUELLE SONT RÉSERVÉS. L'ACCEPTATION DE LA LIVRAISON DE CE DOCUMENT CONSTITUE UN ACCORD À CES CONDITIONS ET MODALITÉS.

| | |
|---|---|
| DESSINÉ DESIGNER | M.JACQUES |
| DATE | 2019-02-12 |
| VÉRIFIÉ CHECKER | S.DUQUET |
| DATE | 2019-02-12 |
| INGÉNIEUR ENGINEER | |
| DATE | |
| ÉCHELLE/SCALE: | |

TITRE/TITLE: HYDRAPOL 500 CONTROL PANEL SCHEMATIC DIAGRAM 120VAC

CLIENT: IQALUIT WWTP

VEOLIA

VEOLIA WATER TECHNOLOGIES CANADA INC. 4105 Sartelon, Saint-Laurent, Qc, Canada. Tel: (514) 334-7230

| PROJET/PROJECT | DESSIN/DRAWING No | INTERNE/INTERNAL | FEUILLET/SHEET | REV. |
|---|---|---|---|---|
| 5000218036 | ELD-0007-AUT-VWT | JOME01 | 2 DE 9 | 4 |

LR 60892

STD: "D" 22x34 | EBI ELECTRIC - 58011-P02 | BAR = 1" À L'ÉCHELLE D'IMPRESSION/BAR = 1" AT PLOT SCALE

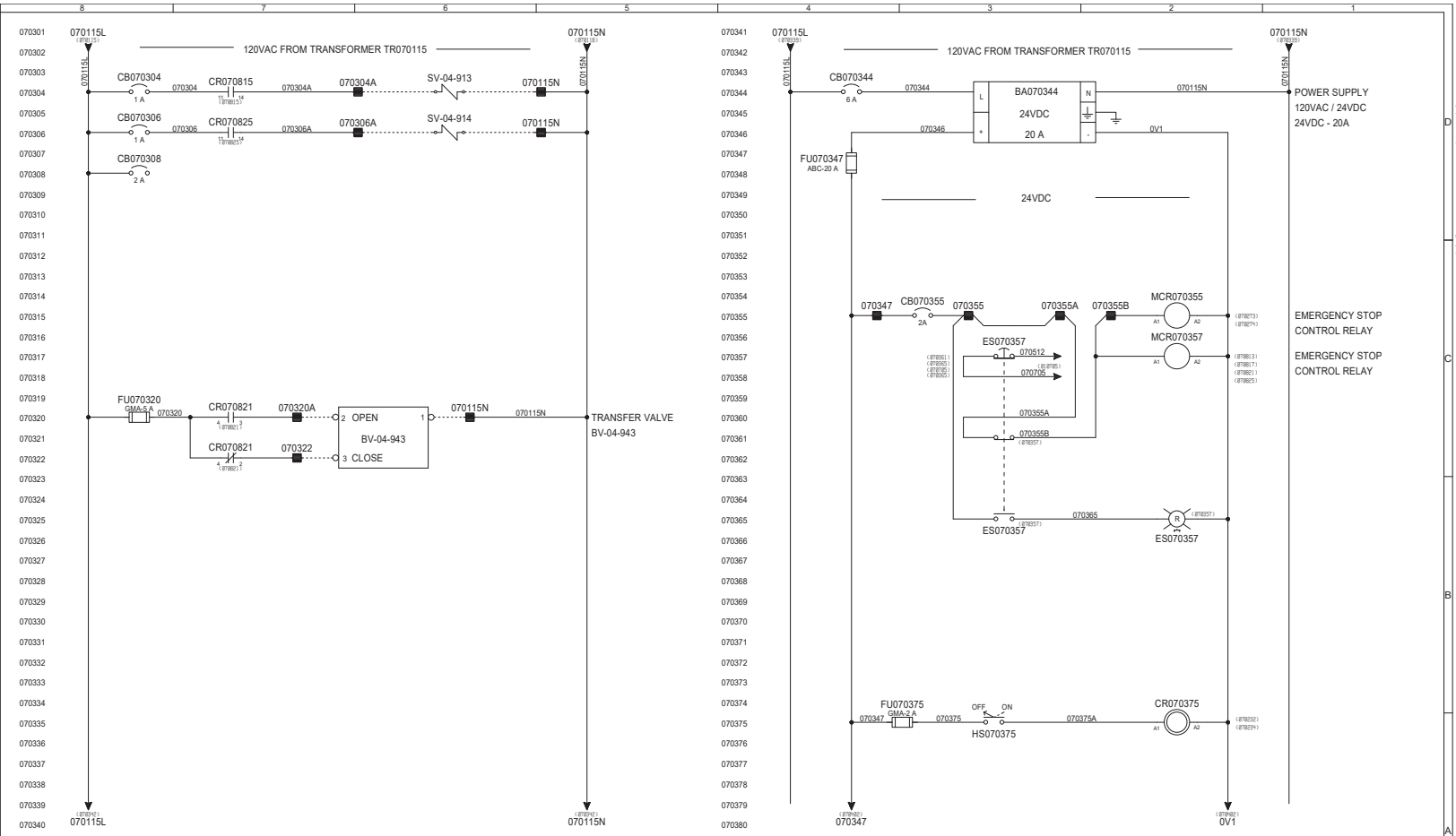


| | | | | | | | |
|---|---|---|---|---|---|---|---|
| 4 | AS COMMISSIONNING | 2019-05-17 | SD | | | | |
| 3 | AS BUILT | 2019-05-03 | SD | | | | |
| 2 | FOR FAB | 2019-04-02 | RM | | | | |
| 1 | FOR APPROVAL | 2019-03-18 | RM | | | | |
| | | | | | | | |
| | | | | | | | |
| REV. | DESCRIPTION | DATE | REV. | VERIC'HK | APPR. | ECN | |

CONFIDENTIALITY AND INTELLECTUAL PROPERTY NOTICE: ALL INFORMATION CONTAINED IN THIS DOCUMENT IS THE SOLE PROPERTY OF VEOLIA WATER TECHNOLOGIES CANADA INC. AND MAY CONTAIN CONFIDENTIAL, PROPRIETARY AND/OR OTHER INTELLECTUAL PROPERTY LAWS. THE DESIGN CONCEPTS AND INFORMATION CONTAINED HEREIN ARE PROPRIETARY TO V.W.T. AND ARE SUBMITTED IN CONFIDENCE. THIS DOCUMENT AND THE INFORMATION MUST BE USED ONLY FOR THE PURPOSE FOR WHICH THE DOCUMENT IS IN POSSESSION. IT SUBMITTED, AND IN NO EVENT LICENCE IS GRANTED OR IMPLIED TO USE THIS DOCUMENT OR THE INFORMATION IT CONTAINS. CONFIDENTIAL AND PRIVILEGED INFORMATION OF V.W.T. AND THEY MUST NOT BE DISCLOSED, REPRODUCED, LOANED, RIGHTED OR USED IN WHOLE OR IN PART FOR ANY PURPOSE WITHOUT THE EXPRESS WRITTEN CONSENT OF V.W.T. V.W.T. ASSUMES NO RESPONSIBILITY OR LIABILITY FOR THE USE OF THIS DOCUMENT OR THIS DESIGN CONCEPTS AND INFORMATION CONTAINED HEREIN FOR PURPOSES OTHER THAN THE SPECIFIC PURPOSE RELATE TO THE OTHER OUR PURPOSE OF THIS DOCUMENT. IN NO EVENT SHALL THIS DOCUMENT OR THE DESIGN CONCEPTS AND INFORMATION CONTAINED HEREIN BE CONSTRUED AS GRANTING ANY LICENCE OR RIGHT OF V.W.T. ALL COPYRIGHT, PATENT AND OTHER INTELLECTUAL PROPERTY RIGHTS ARE RESERVED. ACCEPTANCE OF THE DELIVERY OF THIS DOCUMENT CONSTITUTES AGREEMENT TO THESE TERMS AND CONDITIONS.

AVIS DE CONFIDENTIALITÉ ET DE PROPRIÉTÉ INTELLECTUELLE : L'INFORMATION CONTENUE DANS CE DOCUMENT EST LA PROPRIÉTÉ EXCLUSIVE DE VEOLIA WATER TECHNOLOGIES CANADA INC. ET PEUT RENFERMER LES LOIS DE PROPRIÉTÉ INTELLECTUELLE, CONFIDENTIELLES OU D'AUTRES NATURES. LES CONCEPTS ET L'INFORMATION CONTENUS DANS CE DOCUMENT SONT DÉPOSÉS EN CONFIANCE. CE DOCUMENT ET L'INFORMATION QU'IL CONTIENT DOIVENT ÊTRE UTILISÉS UNIQUEMENT AUX FINS POUR LESQUELLES CE DOCUMENT EST EN POSSESSION, LE CAS ÉCHÉANT, ET AUCUNE LICENCE OU DROIT N'EST ACCORDÉ OU IMPLICITE EN CE QUI CONCERNE L'UTILISATION DE CE DOCUMENT OU DE L'INFORMATION QU'IL CONTIENT. LES RENSEIGNEMENTS CONFIDENTIELS ET PRIVILÉGIÉS SONT LA PROPRIÉTÉ DE V.W.T. ET NE DOIVENT PAS ÊTRE DIVULGUÉS, REPRODUITS, PRÊTÉS, RÉGIS OU UTILISÉS EN TOUTE OU EN PARTIE À QUELQUE FIN QUE CE SOIT SANS LE CONSENTEMENT ÉCRIT DE V.W.T. V.W.T. N'ASSUME AUCUNE RESPONSABILITÉ OU RESPONSABILITÉ POUR L'UTILISATION DE CE DOCUMENT OU DES CONCEPTS ET L'INFORMATION QU'IL CONTIENT À DES FINS AUTRES QUE LES FINS PRÉCISES LIÉES À CE DOCUMENT. AUCUN DOCUMENT NI AUCUNE CONCEPTION NE DOIVENT ÊTRE INTERPRÉTÉS COMME ACCORDANT UNE LICENCE OU UN DROIT DE V.W.T. TOUS LES DROITS D'AUTEUR, BREVETS ET AUTRES DROITS DE PROPRIÉTÉ INTELLECTUELLE SONT RÉSERVÉS. L'ACCEPTATION DE LA LIVRAISON DE CE DOCUMENT CONSTITUE UNE ENTENTE À L'ÉGARD DE CES CONDITIONS.

| | |
|---|---|
| DESSINÉ DESIGNER | M.JACQUES |
| DATE | 2019-02-12 |
| VÉRIFIÉ CHECKER | S.DUQUET |
| DATE | 2019-02-12 |
| INGÉNIEUR ENGINEER | |
| DATE | |
| ÉCHELLE/SCALE: | |

TITRE/TITLE: HYDRAPOL 500 CONTROL PANEL SCHEMATIC DIAGRAM 120VAC

CLIENT: IQALUIT WWTP

VEOLIA

VEOLIA WATER TECHNOLOGIES CANADA INC. 4105 Sartelon, Saint-Laurent, Qc, Canada. Tel: (514) 334-7230

| PROJET/PROJECT | DESSIN/DRAWING No | INTERNE/INTERNAL | FEUILLET/SHEET | REV. |
|---|---|---|---|---|
| 5000218036-ELD-0007-AUT-VWT | JOME01 | 3 DE 9 | | 4 |

LR 60892

STD: "D" 22x34 | EBI ELECTRIC - 58011-P02 | BAR = 1" À L'ÉCHELLE D'IMPRESSION/BAR = 1" AT PLOT SCALE

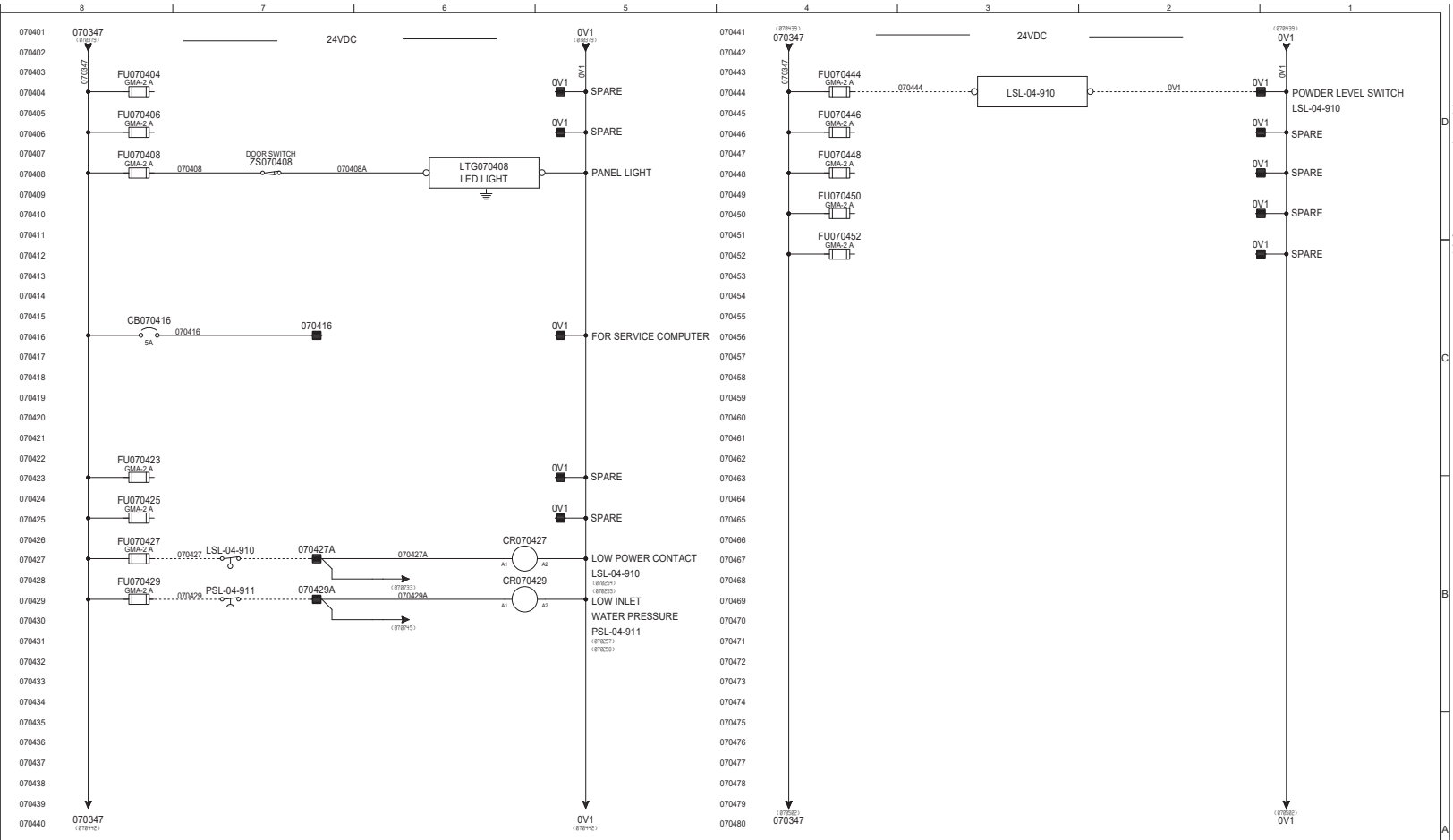


LR 60892

| REV. | DESCRIPTION | DATE | REV. | VERIF/CHK | APPR | ECN |
|---|---|---|---|---|---|---|
| 4 | AS COMMISSIONNING | 2019-05-17 | SD | | | |
| 3 | AS BUILT | 2019-05-03 | SD | | | |
| 2 | FOR FAB | 2019-04-02 | RM | | | |
| 1 | FOR APPROVAL | 2019-03-18 | RM | | | |

CONFIDENTIALITY AND INTELLECTUAL PROPERTY NOTICE
ALL INFORMATION CONTAINED IN THIS DOCUMENT IS THE SOLE PROPERTY OF VEOLIA WATER TECHNOLOGIES CANADA INC. AND CONTAINS CONFIDENTIAL AND PROPRIETARY INFORMATION AND OTHER INTELLECTUAL PROPERTY LAWS. THE DESIGN CONCEPTS AND INFORMATION CONTAINED HEREIN ARE PROPRIETARY TO V.W.T. AND ARE SUBMITTED IN CONFIDENCE. THIS DOCUMENT AND THE INFORMATION MUST BE USED ONLY FOR THE PURPOSE FOR WHICH THE DOCUMENT IS EXPRESSLY SUBMITTED AND NO IMPLICIT LICENCE IS GRANTED BY THE SUBMISSION OF THIS DOCUMENT. THIS DOCUMENT CONTAINS CONFIDENTIAL AND PRIVILEGED INFORMATION OF V.W.T. AND THEY MUST NOT BE DISCLOSED, REPRODUCED, LOANED, WHETTED OR USED IN WHOLE OR IN PART FOR ANY PURPOSE EXCEPT WITH THE WRITTEN CONSENT OF V.W.T. ASSUMING NO RESPONSIBILITY OR LIABILITY FOR THE USE OF THIS DOCUMENT OR THIS DESIGN CONCEPTS AND INFORMATION CONTAINED HEREIN FOR PURPOSES OTHER THAN THE SPECIFIC PROJECT THAT RELATES TO THE INTENDED PURPOSE OF THIS DOCUMENT. IN NO EVENT SHALL THIS DOCUMENT OR THE DESIGN CONCEPTS AND INFORMATION CONTAINED HEREIN BE USED FOR ANY PURPOSE THAT MAY BE INJURIOUS TO THE INTEREST OF V.W.T. ALL COPYRIGHT, PATENT AND OTHER INTELLECTUAL PROPERTY RIGHTS ARE RESERVED. ACCEPTANCE OF THE DELIVERY OF THIS DOCUMENT CONSTITUTES AGREEMENT TO THESE TERMS AND CONDITIONS.

AVIS DE CONFIDENTIALITÉ ET DE PROPRIÉTÉ INTELLECTUELLE
L'INFORMATION CONTENUE DANS CE DOCUMENT EST LA PROPRIÉTÉ EXCLUSIVE DE VEOLIA WATER TECHNOLOGIES CANADA INC. ET CONTIENT DES RENSEIGNEMENTS CONFIDENTIELS ET EXCLUSIFS AINSI QUE D'AUTRES DROITS DE PROPRIÉTÉ INTELLECTUELLE. LES IDÉES ET CONCEPTS ET INFORMATIONS CONTENUS DANS CE DOCUMENT SONT CONFIDENTIELS ET APPARTIENNENT À V.W.T. CE DOCUMENT EST SOUMIS EN CONFIANCE. CE DOCUMENT ET LES RENSEIGNEMENTS QU'IL CONTIENT NE DOIVENT ÊTRE UTILISÉS UNIQUEMENT AUX FINS POUR LESQUELLES CE DOCUMENT EST EXPRESSÉMENT SOUMIS ET AUCUNE LICENCE IMPLICITE N'EST OCTROYÉE DE PAR LA SOUMISSION DE CE DOCUMENT. CE DOCUMENT CONTIENT DES RENSEIGNEMENTS CONFIDENTIELS ET PRIVILÉGIÉS DE V.W.T. ET ILS NE DOIVENT PAS ÊTRE DIVULGUÉS, REPRODUITS, PRÊTÉS, RÉDIGÉS OU UTILISÉS EN TOUTE OU EN PARTIE À QUELQUE FIN QUE CE SOIT SANS LE CONSENTEMENT ÉCRIT DE V.W.T. EN PRENANT EN CHARGE AUCUNE RESPONSABILITÉ OU RESPONSABILITÉ QUANT À L'UTILISATION DE CE DOCUMENT OU DES CONCEPTS ET INFORMATIONS QU'IL CONTIENT À DES FINS AUTRES QUE CELLES QUI SE RAPPORTENT AU PROJET SPÉCIFIQUE QUI SE RAPPORTE À L'OBJET PRÉVU DE CE DOCUMENT. EN AUCUN CAS CE DOCUMENT NE DOIT ÊTRE UTILISÉ À DES FINS QUI PEUVENT NUIRE AUX INTÉRÊTS DE V.W.T. TOUS LES DROITS D'AUTEUR, BREVET ET AUTRES DROITS DE PROPRIÉTÉ INTELLECTUELLE SONT RÉSERVÉS. L'ACCEPTATION DE LA LIVRAISON DE CE DOCUMENT SIGNIFIE QUE LE DESTINATAIRE SE CONFORME AUX MODALITÉS CI-DESSUS.

| | | |
|---|---|---|
| DESSINÉ DESIGNER | M.JACQUES | 2019-02-12 |
| VÉRIFIÉ CHECKER | S.DUQUET | 2019-02-12 |
| INGÉNIEUR ENGINEER | | |
| ÉCHELLE/SCALE: | | |

TITRE/TITLE: HYDRAPOL 500 CONTROL PANEL SCHEMATIC DIAGRAM 24VDC

CLIENT: IQALUIT WWTP

VEOLIA

VEOLIA WATER TECHNOLOGIES CANADA INC. 4105 Sartelon, Saint-Laurent, Qc, Canada. Tel: (514) 334-7230

| PROJET/PROJECT | DESSIN/DRAWING No | INTERNE/INTERNAL | FEUILLET/SHEET | REV. |
|---|---|---|---|---|
| 5000218036-ELD-0007-AUT-VWT | JOME01 | 4 DE 9 | | 4 |

STD: "D" 22x34 | EBI ELECTRIC - 58011-P02 | BAR = 1" À L'ÉCHELLE D'IMPRESSION/BAR = 1" AT PLOT SCALE

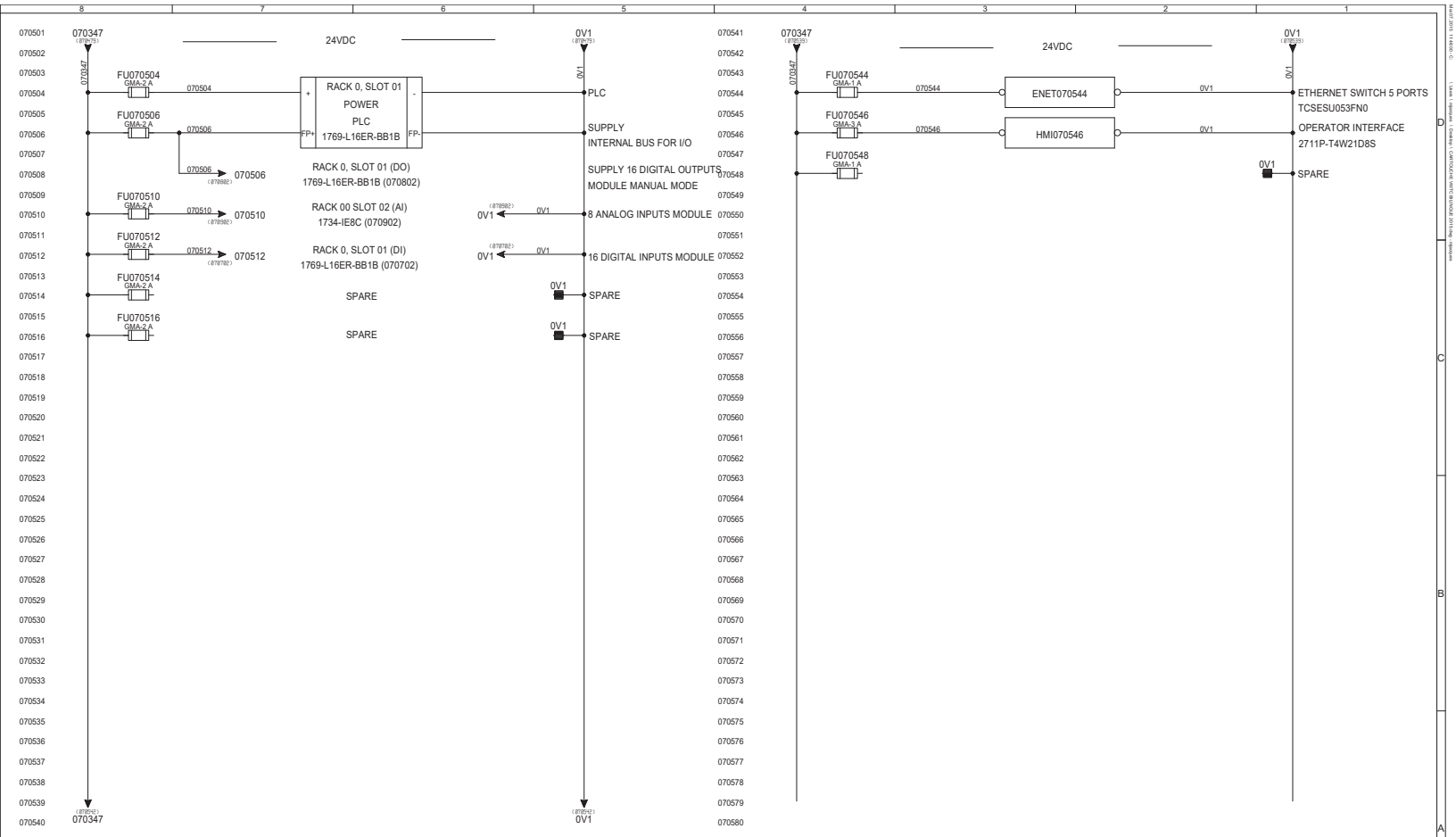


| | | | | | | |
|---|---|---|---|---|---|---|
| 4 | AS COMMISSIONNING | 2019-05-17 | SD | | | |
| 3 | AS BUILT | 2019-05-03 | SD | | | |
| 2 | FOR FAB | 2019-04-02 | RM | | | |
| 1 | FOR APPROVAL | 2019-03-18 | RM | | | |
| | | | | | | |
| | | | | | | |
| REV. | DESCRIPTION | DATE | REV. | VERIF/CHK | APPR. | ECN |

CONFIDENTIALITY AND INTELLECTUAL PROPERTY NOTICE: ALL INFORMATION CONTAINED IN THIS DOCUMENT IS THE SOLE PROPERTY OF VEOLIA WATER TECHNOLOGIES CANADA INC. AND CONTAINS CONFIDENTIAL AND PROPRIETARY INFORMATION AND OTHER INTELLECTUAL PROPERTY LAWS. THE DESIGN CONCEPTS AND INFORMATION CONTAINED HEREIN ARE PROPRIETARY TO V.W.T. AND ARE SUBMITTED IN CONFIDENCE. THIS DOCUMENT AND THE INFORMATION MUST BE USED ONLY FOR THE PURPOSE FOR WHICH THE DOCUMENT IS IS EXPRESSLY SUBMITTED AND NO IMPLICIT LICENCE IS GRANTED TO ANY OTHER USE. THIS DOCUMENT MUST NOT BE COPIED IN WHOLE CONFIDENTIAL AND PRIVILEGED INFORMATION OF V.W.T. AND THEY MUST NOT BE DISCLOSED, REPRODUCED, LOANED, WIBITTED OR USED IN WHOLE OR IN PART FOR ANY PURPOSE WITHOUT THE PRIOR WRITTEN CONSENT OF V.W.T. V.W.T. ASSUMES NO RESPONSIBILITY OR LIABILITY FOR THE USE OF THIS DOCUMENT OR THE DESIGN CONCEPTS AND INFORMATION CONTAINED HEREIN FOR PURPOSES OTHER THAN THE SPECIFIC PROJECT TO WHICH IT RELATES TO THE OTHER EXPRESS PURPOSES OF THIS DOCUMENT. IN NO EVENT SHALL THIS DOCUMENT OR THE DESIGN CONCEPTS AND INFORMATION CONTAINED HEREIN BE USED FOR ANY PURPOSE DETRIMENTAL TO THE INTERESTS OF V.W.T. ALL COPYRIGHT, PATENT AND OTHER INTELLECTUAL PROPERTY RIGHTS ARE RESERVED. ACCEPTANCE OF THE DELIVERY OF THIS DOCUMENT CONSTITUTES AGREEMENT TO THESE TERMS AND CONDITIONS.

AVIS DE CONFIDENTIALITÉ ET DE PROPRIÉTÉ INTELLECTUELLE: L'INFORMATION CONTENUE DANS CE DOCUMENT EST LA PROPRIÉTÉ EXCLUSIVE DE VEOLIA WATER TECHNOLOGIES CANADA INC. ET CONTIENT DES RENSEIGNEMENTS CONFIDENTIELS ET DE PROPRIÉTÉ INTELLECTUELLE. LES IDÉES ET CONCEPTS ET L'INFORMATION CONTENUS DANS CE DOCUMENT SONT LA PROPRIÉTÉ DE V.W.T. ET SONT SOUMIS EN CONFIDENCE. CE DOCUMENT ET L'INFORMATION QU'IL CONTIENT NE DOIVENT ÊTRE UTILISÉS EXCLUSIVEMENT QUE POUR L'OBJET POUR LEQUEL LE DOCUMENT EST EXPRESSÉMENT SOUMIS ET AUCUNE LICENCE IMPLICITE N'EST OCTROYÉE DE TOUTE AUTRE UTILISATION. LA DIVULGATION, LA REPRODUCTION, LE PRÊT, LA TRANSMISSION OU L'UTILISATION, EN TOUT OU EN PARTIE, DE CES RENSEIGNEMENTS CONFIDENTIELS ET PRIVILÉGIÉS À TOUT AUTRE FIN QUE CELLE POUR LAQUELLE REPRÉSENTE LE PRÉSENT DOCUMENT SANS L'AUTORISATION ÉCRITE PRÉALABLE DE V.W.T. EST STRICTEMENT INTERDITE. V.W.T. DÉCLINE TOUTE RESPONSABILITÉ ET TOUTE RESPONSABILITÉ QUANT À L'UTILISATION DE CE DOCUMENT OU DES IDÉES ET CONCEPTS QU'IL CONTIENT À DES FINS AUTRES QUE CELLES POUR LESQUELLES IL A ÉTÉ SOUMIS. AUCUNE UTILISATION DE CE DOCUMENT NE DOIT ÊTRE FAITE DE MANIÈRE À PORTER PRÉJUDICE AUX INTÉRÊTS DE V.W.T. TOUS LES DROITS D'AUTEUR, BREVETS ET AUTRES DROITS DE PROPRIÉTÉ INTELLECTUELLE SONT RÉSERVÉS. L'ACCEPTATION DE LA LIVRAISON DE CE DOCUMENT CONSTITUE UNE ENTENTE À L'ÉGARD DE CES CONDITIONS.

| | | | |
|---|---|---|---|
| DESSINÉ DESIGNER | M.JACQUES | DATE | 2019-02-12 |
| VÉRIFIÉ CHECKER | S.DUQUET | DATE | 2019-02-12 |
| INGÉNIEUR ENGINEER | | DATE | |
| ÉCHELLE/SCALE: | | | |

TITRE/TITLE: HYDRAPOL 500 CONTROL PANEL SCHEMATIC DIAGRAM 24VDC

CLIENT: IQALUIT WWTP

VEOLIA

VEOLIA WATER TECHNOLOGIES CANADA INC. 4105 Sartelon, Saint-Laurent, Qc, Canada. Tel: (514) 334-7230

| PROJET/PROJECT | DESSIN/DRAWING No | INTERNE/INTERNAL | FEUILLET/SHEET | REV. |
|---|---|---|---|---|
| 5000218036 | ELD-0007-AUT-VWT | JOME01 | 5 DE 9 | 4 |

LR 60892

STD: "D" 22x34 | EBI ELECTRIC - 58011-P02 | BAR = 1" À L'ÉCHELLE D'IMPRESSION/BAR = 1" AT PLOT SCALE

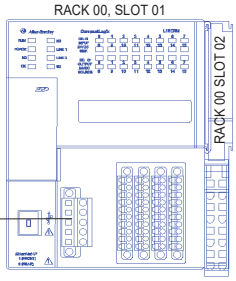


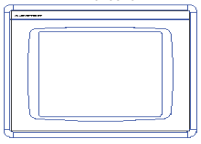


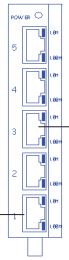


RACK 0

SLOT 01, INPUTS, 1769-L16ER-BB1B, SEE CONNECTING DETAIL DRAWING 5000218036-ELD-0007-AUT-VWT-07

SLOT 01, OUTPUTS, 1769-L16ER-BB1B, SEE CONNECTING DETAIL DRAWING 5000218036-ELD-0007-AUT-VWT-08

SLOT 02, 1734-IE8C, SEE CONNECTING DETAIL DRAWING 5000218036-ELD-0007-AUT-VWT-09

| REV. | DESCRIPTION | DATE | REV. | VERIF/CHK | APPR. | ECN |
|---|---|---|---|---|---|---|
| 4 | AS COMMISSIONNING | 2019-05-17 | SD | | | |
| 3 | AS BUILT | 2019-05-03 | SD | | | |
| 2 | FOR FAB | 2019-04-02 | RM | | | |
| 1 | FOR APPROVAL | 2019-03-18 | RM | | | |

CONFIDENTIALITY AND INTELLECTUAL PROPERTY NOTICE: ALL INFORMATION CONTAINED IN THIS DOCUMENT IS THE SOLE PROPERTY OF VEOLIA WATER TECHNOLOGIES CANADA INC. AND CONTAINS CONFIDENTIAL AND PROPRIETARY INFORMATION AND OTHER INTELLECTUAL PROPERTY LAWS. THE DESIGN CONCEPTS AND INFORMATION CONTAINED HEREIN ARE PROPRIETARY TO "I.S.T." AND ARE SUBMITTED IN CONFIDENCE. THIS DOCUMENT AND THE INFORMATION MUST BE USED ONLY FOR THE PURPOSE FOR WHICH THE DOCUMENT IS IN POSSESSION IS SUBMITTED AND NO IMPLICIT LICENCE IS GRANTED TO USE THE DESIGN CONCEPTS OR INFORMATION. THIS DOCUMENT IS CONFIDENTIAL AND PRIVILEGED INFORMATION OF "I.S.T." AND THEY MUST NOT BE DISCLOSED, REPRODUCED, LOANED, RIGHTED OR USED IN WHOLE OR IN PART FOR ANY PURPOSE WITHOUT THE WRITTEN CONSENT OF "I.S.T." "I.S.T." ASSUMES NO RESPONSIBILITY OR LIABILITY FOR THE USE OF THIS DOCUMENT OR THE DESIGN CONCEPTS AND INFORMATION CONTAINED HEREIN FOR PURPOSES OTHER THAN THE SPECIFIC PROJECT TO WHICH IT RELATES TO THE OTHER FOR PURPOSES OF THIS DOCUMENT. IN NO EVENT SHALL THIS DOCUMENT OR THE DESIGN CONCEPTS AND INFORMATION CONTAINED HEREIN BE USED BY ANY PARTY FOR ANY PURPOSE IN VIOLATION OF U.S.T. ALL COPYRIGHT, PATENT AND OTHER INTELLECTUAL PROPERTY RIGHTS ARE RESERVED. ACCEPTANCE OF THE DELIVERY OF THIS DOCUMENT CONSTITUTES AGREEMENT TO THESE TERMS AND CONDITIONS.

AVIS DE CONFIDENTIALITÉ ET DE PROPRIÉTÉ INTELLECTUELLE : L'INFORMATION CONTENUE DANS CE DOCUMENT EST LA PROPRIÉTÉ EXCLUSIVE DE VEOLIA WATER TECHNOLOGIES CANADA INC. ET CONTIENT DES RENSEIGNEMENTS CONFIDENTIELS ET EXCLUSIFS AINSI QUE D'AUTRES LOIS RELATIVES À LA PROPRIÉTÉ INTELLECTUELLE. LES IDÉES ET CONCEPTS ET RENSEIGNEMENTS CONTENUS DANS CE DOCUMENT SONT CONFIDENTIELS ET SONT SOUMIS À "I.S.T." À TITRE CONFIDENTIEL. CE DOCUMENT ET LES RENSEIGNEMENTS QU'IL CONTIENT NE DOIVENT ÊTRE UTILISÉS EXCLUSIVEMENT QUE POUR L'OBJET POUR LEQUEL LE DOCUMENT EST EN POSSESSION ET NE DOIVENT FAIRE L'OBJET D'AUCUNE DIVULGATION, REPRODUCTION, LOCATION, DROIT OU UTILISATION, EN TOUT OU EN PARTIE, SANS LE CONSENTEMENT ÉCRIT DE "I.S.T." "I.S.T." N'ASSUME AUCUNE RESPONSABILITÉ OU OBLIGATION POUR L'UTILISATION DE CE DOCUMENT OU DES CONCEPTS ET RENSEIGNEMENTS QUI Y SONT CONTENUS POUR DES FINS AUTRES QUE CELLES QUI SE RAPPORTENT PRÉCISÉMENT AU PROJET AUQUEL IL SE RAPPORTE. TOUTE UTILISATION DE CE DOCUMENT OU DES CONCEPTS ET RENSEIGNEMENTS QUI Y SONT CONTENUS À DES FINS CONTRAIRES À LA LOI AMÉRICAINE EST STRICTEMENT INTERDITE. TOUS LES DROITS D'AUTEUR, BREVET, MARQUE DE COMMERCE ET AUTRES DROITS DE PROPRIÉTÉ INTELLECTUELLE SONT RÉSERVÉS. L'ACCEPTATION DE LA LIVRAISON DE CE DOCUMENT CONSTITUE UNE ENTENTE À CES TERMES ET CONDITIONS.

| | | |
|---|---|---|
| DESSINÉ DESIGNER | M.JACQUES | DATE 2019-02-12 |
| VÉRIFIÉ CHECKER | S.DUQUET | DATE 2019-02-12 |
| INGÉNIEUR ENGINEER | | DATE |
| ÉCHELLE/SCALE: | | |

TITRE/TITLE: HYDRAPOL 500 CONTROL PANEL ETHERNET NETWORK AND PLC

CLIENT: IQALUIT WWTP

VEOLIA

VEOLIA WATER TECHNOLOGIES CANADA INC. 4105 Sartelon, Saint-Laurent, Qc, Canada. Tel: (514) 334-7230

| PROJET/PROJECT | DESSIN/DRAWING No | INTERNE/INTERNAL | FEUILLET/SHEET | REV. |
|---|---|---|---|---|
| 5000218036-ELD-0007-AUT-VWT | JOME01 | 6 DE 9 | | 4 |

LR 60892

STD: "D" 22x34 | EBI ELECTRIC - 58011-P02 | BAR = 1" À L'ÉCHELLE D'IMPRESSION/BAR = 1" AT PLOT SCALE

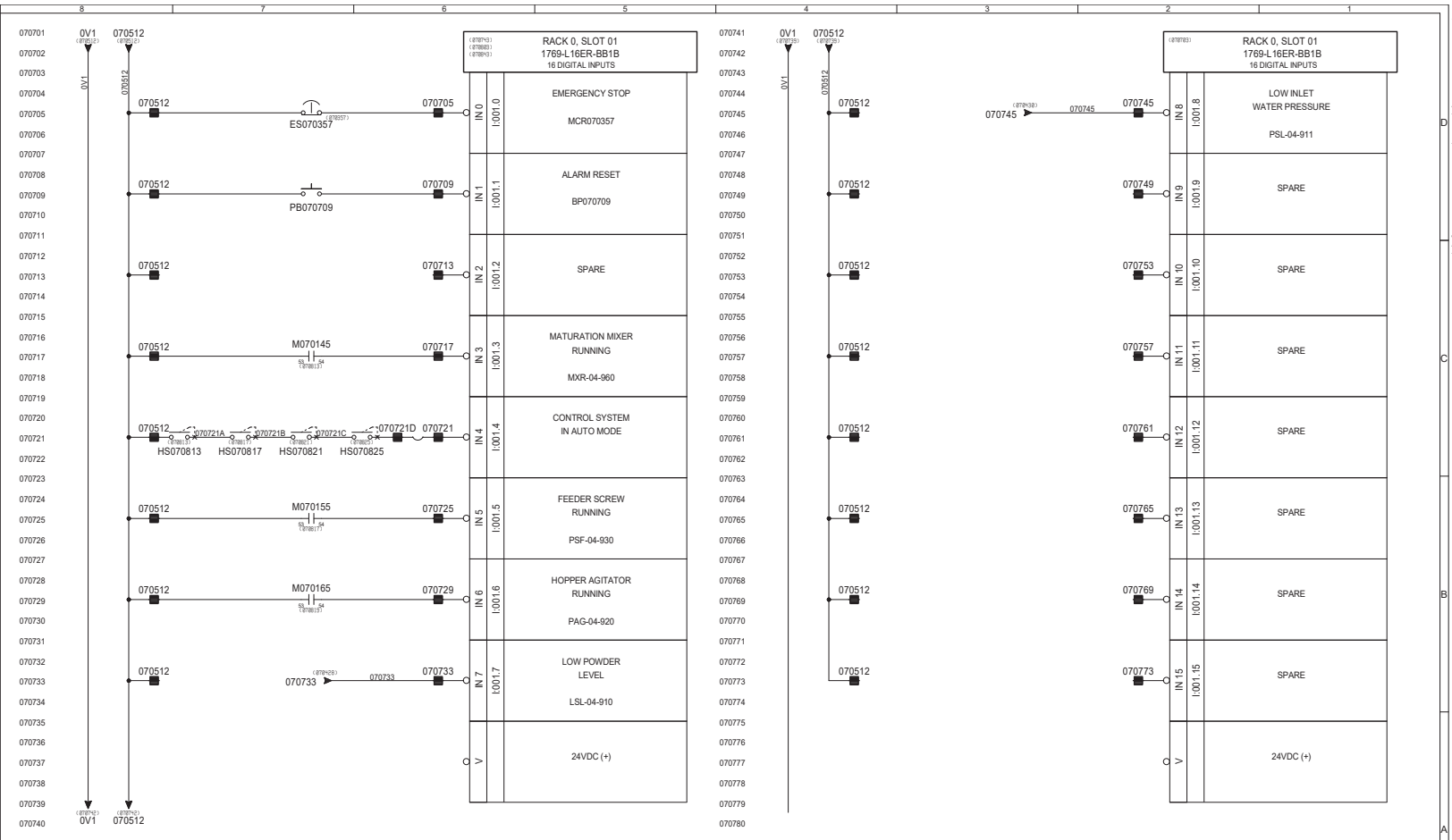


| REV. | DESCRIPTION | DATE | REV. | VERIF/CHK | APPR | ECN |
|---|---|---|---|---|---|---|
| 4 | AS COMMISSIONNING | 2019-05-17 | SD | | | |
| 3 | AS BUILT | 2019-05-03 | SD | | | |
| 2 | FOR FAB | 2019-04-02 | RM | | | |
| 1 | FOR APPROVAL | 2019-03-18 | RM | | | |

CONFIDENTIALITY AND INTELLECTUAL PROPERTY NOTICE: ALL INFORMATION CONTAINED IN THIS DOCUMENT IS THE SOLE PROPERTY OF VEOLIA WATER TECHNOLOGIES CANADA INC. AND MAY INCORPORATE CONFIDENTIAL AND PROPRIETARY INFORMATION OTHER INTELLECTUAL PROPERTY LAWS. THE DESIGN CONCEPTS AND INFORMATION CONTAINED HEREIN ARE PROPRIETARY TO VWT, AND ARE SUBMITTED IN CONFIDENCE. THIS DOCUMENT AND THE INFORMATION MUST BE USED ONLY FOR THE PURPOSE FOR WHICH THE DOCUMENT IS IN POSSESSION IS SUBMITTED. AND NO DUPLICATE LICENCE IS GRANTED OR IMPLIED. THIS DOCUMENT AND THE INFORMATION IT CONTAINS IS CONFIDENTIAL AND PRIVILEGED INFORMATION OF VWT, AND THEY MUST NOT BE DISCLOSED, REPRODUCED, LOANED, RIBBITTED OR USED IN WHOLE OR IN PART FOR ANY PURPOSE OTHER THAN THAT FOR WHICH IT IS SUBMITTED. VWT ASSUMES NO RESPONSIBILITY OR LIABILITY FOR THE USE OF THIS DOCUMENT OR THE DESIGN CONCEPTS AND INFORMATION CONTAINED OR EXPRESSED HEREIN FOR ANY PURPOSE OTHER THAN THAT WHICH RELATES TO THE INTENDED PURPOSE OF THIS DOCUMENT. IN NO EVENT SHALL THIS DOCUMENT OR THE DESIGN CONCEPTS AND INFORMATION CONTAINED OR EXPRESSED HEREIN BE USED FOR THE BENEFIT OF A THIRD PARTY. ALL COPYRIGHT, PATENT AND OTHER INTELLECTUAL PROPERTY RIGHTS ARE RESERVED. ACCEPTANCE OF THE DELIVERY OF THIS DOCUMENT CONSTITUTES AGREEMENT TO THESE TERMS AND CONDITIONS.

AVIS DE CONFIDENTIALITÉ ET DE PROPRIÉTÉ INTELLECTUELLE : L'INFORMATION CONTENUE DANS CE DOCUMENT EST LA PROPRIÉTÉ EXCLUSIVE DE VEOLIA WATER TECHNOLOGIES CANADA INC. ET PEUT INCORPORER DES RENSEIGNEMENTS CONFIDENTIELS ET EXCLUSIFS ET D'AUTRES LOIS SUR LA PROPRIÉTÉ INTELLECTUELLE. LES IDÉES ET DONNÉES CONTENUES DANS CE DOCUMENT SONT LA PROPRIÉTÉ DE VWT ET SONT SOUMISES EN CONFIDENCE. CE DOCUMENT ET LES RENSEIGNEMENTS QU'IL CONTIENT DOIVENT ÊTRE UTILISÉS EXCLUSIVEMENT AUX FINS POUR LESQUELLES CE DOCUMENT EST SOUMIS ET NE DOIVENT PAS ÊTRE DIVULGUÉS, REPRODUITS, PRÊTÉS, RIBBITÉS OU UTILISÉS EN TOUT OU EN PARTIE À D'AUTRES FINS SANS AUTORISATION ÉCRITE PRÉALABLE. AUCUNE LICENCE N'EST CONCÉDÉE OU IMPLIQUÉE. VWT N'ASSUME AUCUNE RESPONSABILITÉ OU RESPONSABILITÉ POUR L'UTILISATION DE CE DOCUMENT OU DES CONCEPTS ET RENSEIGNEMENTS QU'IL CONTIENT OU EXPOSE À DES FINS AUTRES QUE CELLES QUI SE RAPPORTENT À L'OBJET PRÉVU DE CE DOCUMENT. CE DOCUMENT NE PEUT EN AUCUN CAS ÊTRE UTILISÉ AU PROFIT D'UNE TIERCE PARTIE. TOUS LES DROITS D'AUTEUR, BREVETS ET AUTRES DROITS DE PROPRIÉTÉ INTELLECTUELLE SONT RÉSERVÉS. L'ACCEPTATION DE LA LIVRAISON DE CE DOCUMENT CONSTITUE UNE ENTENTE À CES CONDITIONS ET MODALITÉS.

| | | |
|---|---|---|
| DESSINÉ DESIGNER | M.JACQUES | DATE 2019-02-12 |
| VÉRIFIÉ CHECKER | S.DUQUET | DATE 2019-02-12 |
| INGÉNIEUR ENGINEER | | DATE |
| ÉCHELLE/SCALE: | | |

TITRE/TITLE: HYDRAPOL 500 CONTROL PANEL
RACK 00 SLOT 01 INPUTS, 1769-L18ER-BB1B

CLIENT: IQALUIT WWTP

VEOLIA

VEOLIA WATER TECHNOLOGIES CANADA INC. 4105 Sartelon, Saint-Laurent, Qc, Canada. Tel: (514) 334-7230

| PROJET/PROJECT | DESSIN/DRAWING No | INTERNE/INTERNAL | FEUILLET/SHEET | REV. |
|---|---|---|---|---|
| 5000218036-ELD-0007-AUT-VWT | JOME01 | 7 DE 9 | | 4 |

LR 60892

STD: "D" 22x34 | EBI ELECTRIC - 58011-P02 | BAR = 1" À L'ÉCHELLE D'IMPRESSION/BAR = 1" AT PLOT SCALE

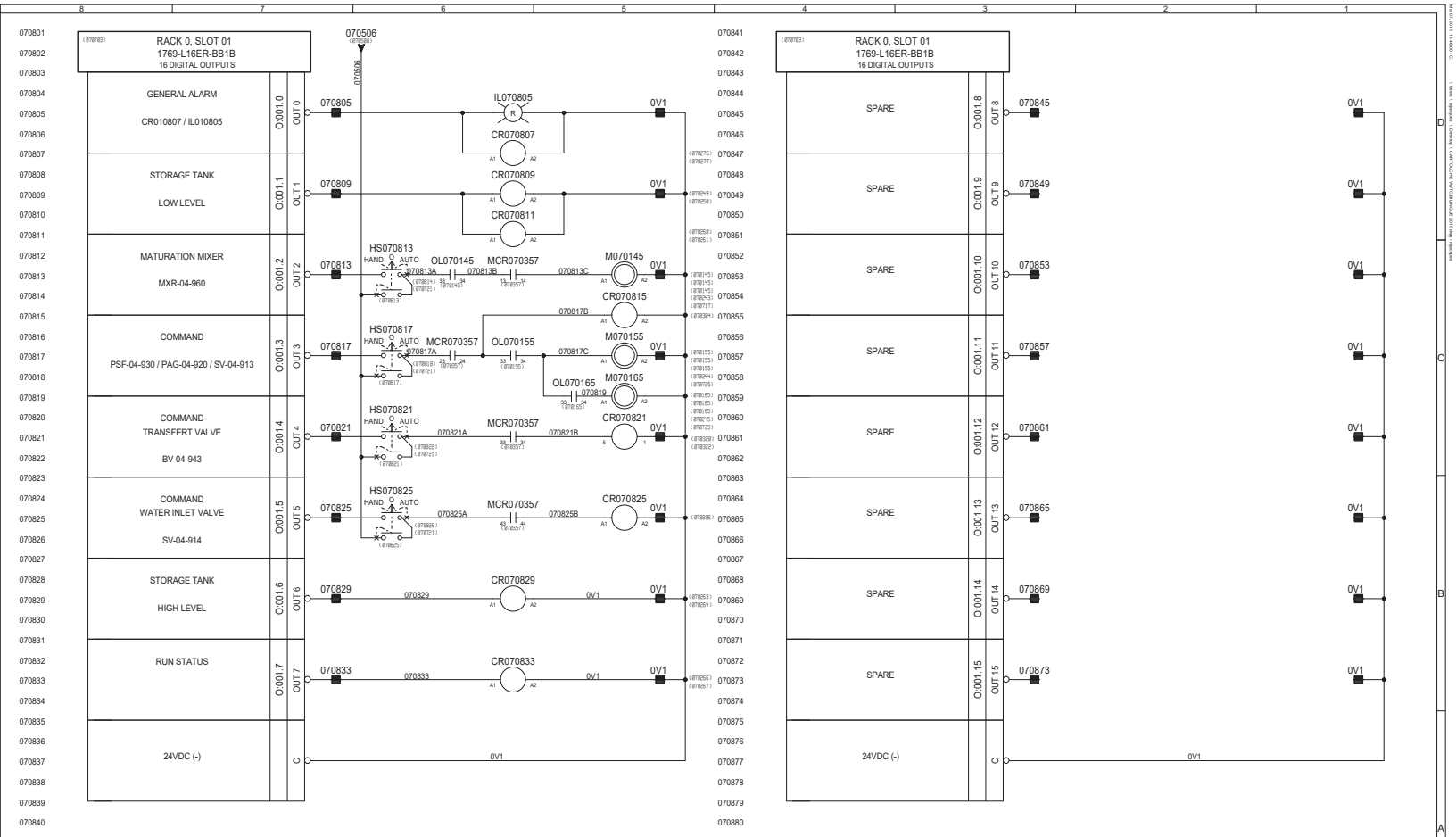


| | | | | | | | |
|---|---|---|---|---|---|---|---|
| 4 | AS COMMISSIONNING | 2019-05-17 | SD | | | | |
| 3 | AS BUILT | 2019-05-03 | SD | | | | |
| 2 | FOR FAB | 2019-04-02 | RM | | | | |
| 1 | FOR APPROVAL | 2019-03-18 | RM | | | | |
| REV. | DESCRIPTION | DATE | REV. | VERIF/CHK | APPR. | ECN | |

CONFIDENTIALITY AND INTELLECTUAL PROPERTY NOTICE
ALL INFORMATION CONTAINED IN THIS DOCUMENT IS THE SOLE PROPERTY OF VEOLIA WATER TECHNOLOGIES CANADA INC. AND CONTAINS CONFIDENTIAL AND PROPRIETARY INFORMATION AND OTHER INTELLECTUAL PROPERTY LAWS. THE DESIGN CONCEPTS AND INFORMATION CONTAINED HEREIN ARE PROPRIETARY TO VWT, AND ARE SUBMITTED IN CONFIDENCE. THIS DOCUMENT AND THE INFORMATION MUST BE USED ONLY FOR THE PURPOSE FOR WHICH THE DOCUMENT IS IN POSSESSION IT SUBMITTED. AND NO IMPLICIT LICENCE IS GRANTED TO USE THE DESIGN CONCEPTS AND INFORMATION. THIS DOCUMENT IS CONFIDENTIAL AND PRIVILEGED INFORMATION OF VWT, AND THEY MUST NOT BE DISCLOSED, REPRODUCED, LOANED, WHETTED OR USED IN WHOLE OR IN PART FOR ANY PURPOSE OTHER THAN THE PURPOSE FOR WHICH IT IS T. V.W.T. ASSUMES NO RESPONSIBILITY OR LIABILITY FOR THE USE OF THIS DOCUMENT OR THE DESIGN CONCEPTS AND INFORMATION CONTAINED HEREIN FOR PURPOSES OTHER THAN THE SPECIFIC PROJECT RELATE TO THE ATTACH OR PURPOSE OF THIS DOCUMENT. IN NO EVENT SHALL THIS DOCUMENT OR THE DESIGN CONCEPTS AND INFORMATION CONTAINED HEREIN BE USED BY ANY PERSON FOR ANY PURPOSE OTHER THAN THE INTENDED OR PURPOSE OF THIS DOCUMENT. ALL COPYRIGHT, PATENT AND OTHER INTELLECTUAL PROPERTY RIGHTS ARE RESERVED. ACCEPTANCE OF THE DELIVERY OF THIS DOCUMENT CONSTITUTES AGREEMENT TO THESE TERMS AND CONDITIONS.

AVIS DE CONFIDENTIALITÉ ET DE PROPRIÉTÉ INTELLECTUELLE
L'INFORMATION CONTENUE DANS CE DOCUMENT EST LA PROPRIÉTÉ EXCLUSIVE DE VEOLIA WATER TECHNOLOGIES CANADA INC. ET CONTIENT DES RENSEIGNEMENTS CONFIDENTIELS ET EXCLUSIFS AINSI QUE D'AUTRES LOIS SUR LA PROPRIÉTÉ INTELLECTUELLE. LES DESSINS CONCEPTUELS ET RENSEIGNEMENTS CONTENUS DANS CE DOCUMENT SONT LA PROPRIÉTÉ DE VWT ET SONT SOUMIS EN CONFIDENCE. CE DOCUMENT ET LES RENSEIGNEMENTS QU'IL CONTIENT DOIVENT ÊTRE UTILISÉS UNIQUEMENT AUX FINS POUR LESQUELLES CE DOCUMENT EST PRÉSENTÉ. AUCUNE LICENCE IMPLICITE N'EST ACCORDÉE POUR UTILISER LES DESSINS CONCEPTUELS ET RENSEIGNEMENTS. CE DOCUMENT CONTIENT DES RENSEIGNEMENTS CONFIDENTIELS ET PRIVILÉGIÉS QUI NE DOIVENT PAS ÊTRE DIVULGUÉS, REPRODUITS, PRÊTÉS, RÉDIGÉS OU UTILISÉS EN TOUTE OU EN PARTIE À DES FINS AUTRES QUE CELLES POUR LESQUELLES IL EST PRÉVU. V.W.T. DÉCLINE TOUTE RESPONSABILITÉ OU RESPONSABILITÉ QUANT À L'UTILISATION DE CE DOCUMENT AINSI QUE DES DESSINS CONCEPTUELS ET L'INFORMATION QUI Y SONT CONTENUS À DES FINS AUTRES QUE CELLES PRÉVUES DANS CE DOCUMENT. EN AUCUN CAS CE DOCUMENT NE DOIT ÊTRE UTILISÉ PAR QUICONQUE À DES FINS AUTRES QUE CELLES PRÉVUES DANS CE DOCUMENT. TOUS LES DROITS D'AUTEUR, BREVETS ET AUTRES DROITS DE PROPRIÉTÉ INTELLECTUELLE SONT RÉSERVÉS. L'ACCEPTATION DE LA LIVRAISON DE CE DOCUMENT IMPLIQUE L'ACCEPTATION DE CES CONDITIONS.

| | |
|---|---|
| DESSINÉ DESIGNER | M.JACQUES |
| DATE | 2019-02-12 |
| VÉRIFIÉ CHECKER | S.DUQUET |
| DATE | 2019-02-12 |
| INGÉNIEUR ENGINEER | |
| DATE | |
| ÉCHELLE/SCALE: | |

TITRE/TITLE: HYDRAPOL 500 CONTROL PANEL
RACK 00 SLOT 01 OUTPUTS, 1769-L18ER-BB1B

CLIENT: IQALUIT WWTP

VEOLIA
VEOLIA WATER TECHNOLOGIES CANADA INC. 4105 Sartelon, Saint-Laurent, Qc, Canada. Tel: (514) 334-7230

| PROJET/PROJECT | DESSIN/DRAWING No | INTERNE/INTERNAL | FEUILLET/SHEET | REV. |
|---|---|---|---|---|
| 5000218036-ELD-0007-AUT-VWT | JOME01 | 8 DE 9 | | 4 |

LR 60892

STD: "D" 22x34 | EBI ELECTRIC - 58011-P02 | BAR = 1" À L'ÉCHELLE D'IMPRESSION/BAR = 1" AT PLOT SCALE

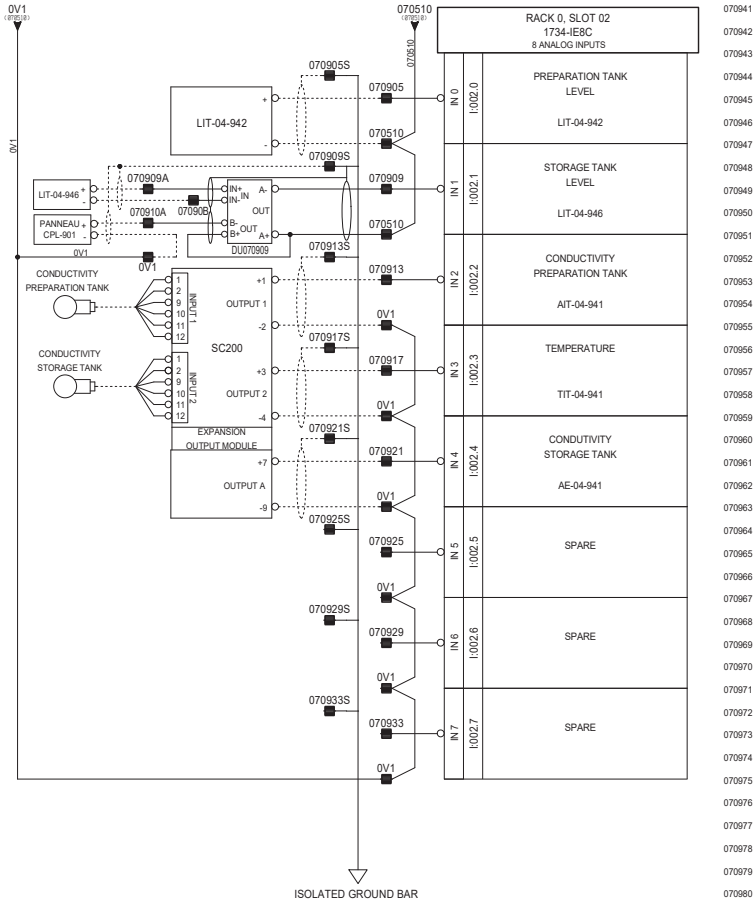


| REV. | DESCRIPTION | DATE | REV. | VERIF/CHK | APPR. | ECN |
|---|---|---|---|---|---|---|
| 4 | AS COMMISSIONNING | 2019-05-17 | SD | | | |
| 3 | AS BUILT | 2019-05-03 | SD | | | |
| 2 | FOR FAB | 2019-04-02 | RM | | | |
| 1 | FOR APPROVAL | 2019-03-18 | RM | | | |

CONFIDENTIALITY AND INTELLECTUAL PROPERTY NOTICE
ALL INFORMATION CONTAINED IN THIS DOCUMENT IS THE SOLE PROPERTY OF VEOLIA WATER TECHNOLOGIES CANADA INC. AND CONTAINS CONFIDENTIAL AND PROPRIETARY INFORMATION AND OTHER INTELLECTUAL PROPERTY LAWS. THE DESIGN CONCEPTS AND INFORMATION CONTAINED HEREIN ARE PROPRIETARY TO VWT AND ARE SUBMITTED IN CONFIDENCE. THIS DOCUMENT AND THE INFORMATION MUST BE USED ONLY FOR THE PURPOSE FOR WHICH THE DOCUMENT IS IN POSSESSION IT SUBMITTED. AND IN NO IMPLICIT LICENCE IS GRANTED TO USE THE DESIGN CONCEPTS OR INFORMATION. THIS DOCUMENT IS CONFIDENTIAL AND PRIVILEGED INFORMATION OF V.W.T. AND THEY MUST NOT BE DISCLOSED, REPRODUCED, LOANED, WEBITTED OR USED IN WHOLE OR IN PART FOR ANY PURPOSE WITHOUT THE PRIOR WRITTEN CONSENT OF V.W.T. V.W.T ASSUMES NO RESPONSIBILITY OR LIABILITY FOR THE USE OF THIS DOCUMENT OR THE DESIGN CONCEPTS AND INFORMATION CONTAINED HEREIN FOR PURPOSES OTHER THAN THE SPECIFIC PROJECT RELATED TO THE INTENDED PURPOSE OF THIS DOCUMENT. IN NO EVENT SHALL THIS DOCUMENT OR THE DESIGN CONCEPTS AND INFORMATION CONTAINED HEREIN BE CONSTRUED AS GRANTING ANY LICENSE OR RIGHT OF V.W.T. ALL COPYRIGHT, PATENT AND OTHER INTELLECTUAL PROPERTY RIGHTS ARE RESERVED. ACCEPTANCE OF THE DELIVERY OF THIS DOCUMENT CONSTITUTES AGREEMENT TO THESE TERMS AND CONDITIONS.

AVIS DE CONFIDENTIALITÉ ET DE PROPRIÉTÉ INTELLECTUELLE
L'INFORMATION CONTENUE DANS CE DOCUMENT EST LA PROPRIÉTÉ EXCLUSIVE DE VEOLIA WATER TECHNOLOGIES CANADA INC. ET CONTIENT DES RENSEIGNEMENTS CONFIDENTIELS ET EXCLUSIFS AINSI QUE D'AUTRES LOIS SUR LA PROPRIÉTÉ INTELLECTUELLE. LES DESSINS, CONCEPTS ET INFORMATIONS CONTENUS DANS CE DOCUMENT SONT CONFIDENTIELS ET SOUMIS EN CONFIDENCE. CE DOCUMENT ET LES RENSEIGNEMENTS QU'IL CONTIENT DOIVENT ÊTRE UTILISÉS EXCLUSIVEMENT AUX FINS POUR LESQUELLES CE DOCUMENT EST SOUMIS. AUCUNE LICENCE OU DROIT N'EST ACCORDÉ EN CE QUI CONCERNE LES CONCEPTS OU RENSEIGNEMENTS DE CONCEPTION. V.W.T. N'ASSUME AUCUNE RESPONSABILITÉ OU RESPONSABILITÉ POUR L'UTILISATION DE CE DOCUMENT OU DES CONCEPTS DE CONCEPTION ET RENSEIGNEMENTS CONTENUS DANS LES PRÉSENTES À DES FINS AUTRES QUE LES FINS PRÉCISES RELATIVES AU PROJET DÉCRIT DANS CE DOCUMENT. EN AUCUN CAS CE DOCUMENT NE SAURAIT ÊTRE INTERPRÉTÉ COMME ACCORDANT UNE LICENCE OU UN DROIT DE V.W.T. QUELCONQUE EN MATIÈRE DE DROIT D'AUTEUR, DE BREVET OU D'AUTRE DROIT DE PROPRIÉTÉ INTELLECTUELLE. L'ACCEPTATION DE LA LIVRAISON DE CE DOCUMENT CONSTITUE L'ACCEPTATION DE CES CONDITIONS.

| | |
|---|---|
| DESSINÉ DESIGNER | M.JACQUES |
| DATE | 2019-02-12 |
| VÉRIFIÉ CHECKER | S.DUQUET |
| DATE | 2019-02-12 |
| INGÉNIEUR ENGINEER | |
| DATE | |
| ÉCHELLE/SCALE: | |

TITRE/TITLE: HYDRAPOL 500 CONTROL PANEL
RACK 0, SLOT 02, 1734-IE8C

CLIENT: IQALUIT WWTP

VEOLIA

VEOLIA WATER TECHNOLOGIES CANADA INC. 4105 Sartelon, Saint-Laurent, Qc, Canada. Tel: (514) 334-7230

| PROJET/PROJECT | DESSIN/DRAWING No | INTERNE/INTERNAL | FEUILLET/SHEET | REV. |
|---|---|---|---|---|
| 5000218036 | ELD-0007-AUT-VWT | JOME01 | 9 DE 9 | 4 |

LR 60892

STD: "D" 22x34 | EBI ELECTRIC - 58011-P02 | BAR = 1" À L'ÉCHELLE D'IMPRESSION/BAR = 1" AT PLOT SCALE

# WWTP UPGRADE
# CITY OF IQALUIT
# CONTROL JUNCTION BOX
# JB-003 DAF polymer dosing skid
# PROJECT: 5000218036

| REV | DESCRIPTION | DATE | REVD | CHKD | APVD | ECN |
|---|---|---|---|---|---|---|
| 3 | AS BUILT | 2019-03-26 | HZ | RA | - | - |
| 2 | FOR FABRICATION | 2019-03-15 | MR | RA | - | - |
| 1 | FOR APPROVAL | 2019-02-07 | HZ | RA | - | - |

**CONFIDENTIALITY AND INTELLECTUAL PROPERTY NOTICE**
ALL INFORMATION CONTAINED IN THIS DOCUMENT IS THE SOLE PROPERTY OF VEOLIA WATER TECHNOLOGIES CANADA INC. AND IS PROTECTED BY ALL APPLICABLE LAWS, INCLUDING BUT NOT LIMITED TO COPYRIGHT AND OTHER INTELLECTUAL PROPERTY LAWS. THE DESIGN CONCEPTS AND INFORMATION CONTAINED HEREIN ARE PROPRIETARY TO V.W.T. AND ARE SUBMITTED IN CONFIDENCE. THEY ARE NOT TRANSFERABLE. THEY MUST BE USED ONLY FOR THE PURPOSE FOR WHICH THE DOCUMENT IS EXPRESSLY SUBMITTED AND NO IMPLICIT LICENCE IS GRANTED OTHERWISE BY THE SUBMISSION OF THIS DOCUMENT. THEY ARE CONFIDENTIAL AND PRIVILEGED INFORMATION OF V.W.T. AND THEY MUST NOT BE DISCLOSED, REPRODUCED, LOANED, REMITTED OR USED IN ANY OTHER MANNER WITHOUT THE EXPRESS WRITTEN CONSENT OF V.W.T. V.W.T. ASSUMES NO RESPONSIBILITY OR LIABILITY FOR THE USE OF THIS DOCUMENT OR THE DESIGN CONCEPTS AND INFORMATION CONTAINED HEREIN FOR ANOTHER PROJECT, OR IN A MANNER THAT DOES NOT RELATE TO THE FITNESS OR PURPOSE OF THIS DOCUMENT. IN NO EVENT SHALL THIS DOCUMENT OR THE DESIGN CONCEPTS AND INFORMATION CONTAINED HEREIN BE USED IN A MANNER DETRIMENTAL TO THE INTEREST OF V.W.T. ALL COPYRIGHT, PATENT AND OTHER INTELLECTUAL PROPERTY RIGHTS ARE RESERVED. ACCEPTANCE OF THE DELIVERY OF THIS DOCUMENT CONSTITUTES AGREEMENT TO THESE TERMS AND CONDITIONS.

| | | |
|---|---|---|
| DESIGNER | DATE | TITLE: JB-003 CONTROL JUNCTION BOX TITLE PAGE |
| CHECKER | DATE | CLIENT: WWTP UPGRADE CITY OF IQALUIT |
| ENGINEER | DATE | VEOLIA |
| SCALE: N/A | | VEOLIA WATER TECHNOLOGIES CANADA INC. 4105 Sanfelice, Saint-Laurent, Qc, Canada. Tel: (514) 334-7230 |

| PROJECT | DRAWING | INTERNAL | SHEET | REV |
|---|---|---|---|---|
| 5000218036-EPL | 0004-AU-VWT | - | 01 OF 05 | 3 |

Mar 26, 2019 11:04:58 - G:\Projets A67XX\A6798A @ A6798B - VEOLIA - 5000218036 Iqaluit WWTP Upgrade\DOC\DESSIN\000-DRAWINGS\JB-003\REV 2 - Copy\5000218036-EPL-0004-AU-VWT-001.dwg - zhu
BAR = 1" AT PLOT SCALE
REF: A6798B
STD: "B" 11x17

DRAWING LIST

| DESCRIPTION | DRAWING NUMBER |
|---|---|
| CONTROL JUNCTION BOX JB-003 | |
| TITLE PAGE | 5000218036-EPL-0004-AU-VWT-001 |
| LEGEND & DRAWING LIST | 5000218036-EPL-0004-AU-VWT-002 |
| EXTERNAL & INTERNAL LAYOUT | 5000218036-EPL-0004-AU-VWT-003 |
| BILL OF MATERIAL | 5000218036-EPL-0004-AU-VWT-004 |
| TERMINAL LAYOUT | 5000218036-EPL-0004-AU-VWT-005 |
| FIELD WIRING | 5000218036-EID-0004-AU-VWT-001 |
| FIELD WIRING | 5000218036-EID-0004-AU-VWT-002 |

LEGEND

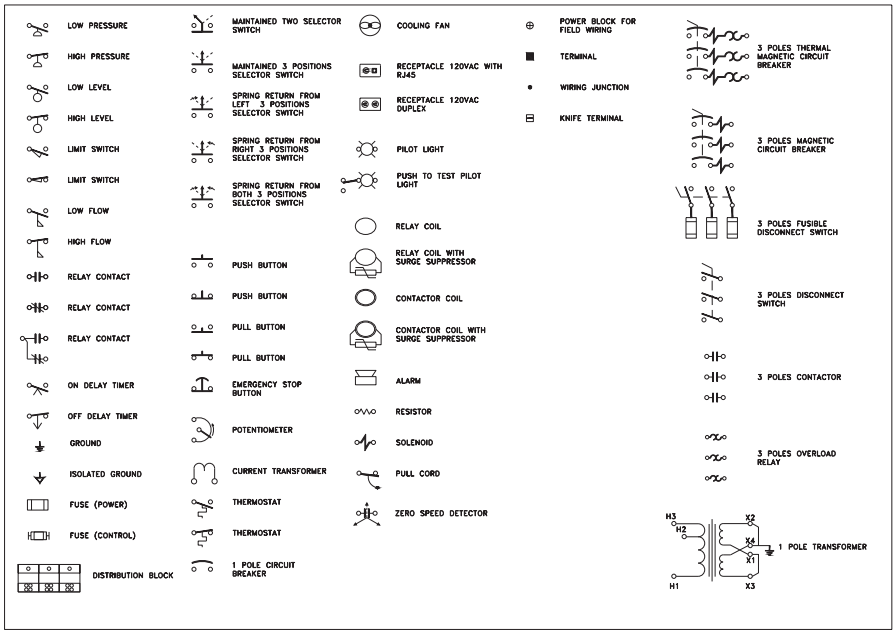


| WIRE COLOR CODE | |
|---|---|
| MINIMAL 18AWG GAUGE | |
| POWER 120VAC | BLACK |
| CONTROL 120VAC | RED |
| NEUTRAL | WHITE |
| 24VDC | BLUE |
| 0VDC | BLUE/WHITE |
| DRY CONTRACT | YELLOW, 14AWG |
| NON-ISOLATED GROUND | GREEN |
| ISOLATED GROUND | GREEN/YELLOW |
| TWISTED PAIR | (+) BLACK & (-) WHITE |

| REV | DESCRIPTION | DATE | REVD | CHKD | APVD | ECN |
|---|---|---|---|---|---|---|
| 3 | AS BUILT | 2019-03-26 | HZ | RA | – | – |
| 2 | FOR FABRICATION | 2019-03-15 | MR | RA | – | – |
| 1 | FOR APPROVAL | 2019-02-07 | HZ | RA | – | – |


CONFIDENTIALITY AND INTELLECTUAL PROPERTY NOTICE
ALL INFORMATION CONTAINED IN THIS DOCUMENT IS THE SOLE PROPERTY OF VEOLIA WATER TECHNOLOGIES CANADA INC. AND IS PROTECTED BY ALL APPLICABLE LAWS, INCLUDING BUT NOT LIMITED TO COPYRIGHT AND OTHER INTELLECTUAL PROPERTY LAWS. THE DESIGN CONCEPTS AND INFORMATION CONTAINED HEREIN ARE PROPRIETARY TO V.W.T. AND ARE SUBMITTED IN CONFIDENCE. THEY ARE NOT TRANSFERRED, NOR IS THE RECIPIENT GRANTED ANY LICENSE, EXPRESS OR IMPLIED, EXCEPT AS EXPRESSLY SUBMITTED AND NO IMPLICIT LICENCE IS GRANTED OTHERWISE BY THE SUBMISSION OF THIS DOCUMENT. THEY ARE CONFIDENTIAL AND PRIVILEGED INFORMATION OF V.W.T. AND THEY MUST NOT BE DISCLOSED, REPRODUCED, LOANED, REWRITTEN OR USED IN ANY OTHER MANNER WITHOUT THE EXPRESS WRITTEN CONSENT OF V.W.T. V.W.T. ASSUMES NO RESPONSIBILITY OR LIABILITY FOR THE USE OF THIS DOCUMENT OR OF ANY PORTION THEREOF IN CONNECTION WITH ANY PROJECT NOTIFIED TO V.W.T. OTHER THAN THE PROJECT OR IN A MANNER THAT DOES NOT RELATE TO THE FITNESS OR PURPOSE OF THIS DOCUMENT. IN NO EVENT SHALL THIS DOCUMENT OR THE DESIGN CONCEPTS AND INFORMATION CONTAINED HEREIN BE USED IN A MANNER DETRIMENTAL TO THE INTEREST OF V.W.T. ALL COPYRIGHT, PATENT AND OTHER INTELLECTUAL PROPERTY RIGHTS ARE RESERVED. ACCEPTANCE OF THE DELIVERY OF THIS DOCUMENT CONSTITUTES AGREEMENT TO THESE TERMS AND CONDITIONS.


| | |
|---|---|
| DESIGNER | DATE – |
| CHECKER | DATE – |
| ENGINEER | DATE – |
| SCALE: | N/A |

TITLE: JB-003 CONTROL JUNCTION BOX LEGEND & DRAWING LIST

CLIENT: WWTP UPGRADE CITY OF IQALUIT


VEOLIA WATER TECHNOLOGIES CANADA INC. 4105 Sartelon, Saint-Laurent, Qc, Canada, Tel: (514) 334-7230


| PROJECT | DRAWING | INTERNAL | SHEET | REV |
|---|---|---|---|---|
| 5000218036-EPL | 0004-AU-VWT | – | 02 OF 05 | 3 |


Mar 26, 2019 11:05:00 - G:\Projets A67XX\A6798A @ A6798B - VEOLIA - 5000218036 Iqaluit WWTP Upgrade\DOC\DESIN\000-DRAWINGS\JB-003\REV 2 - Copy\5000218036-EPL-0004-AU-VWT-002.dwg - zhu

BAR = 1" AT PLOT SCALE
REF: A6798B
STD: "B" 11x17

ENCLOSURE NEMA 4X-FIBERGLASS / 17,87H'' X 16W'' X 8D'' (PJ16148)
cUL APPROVAL

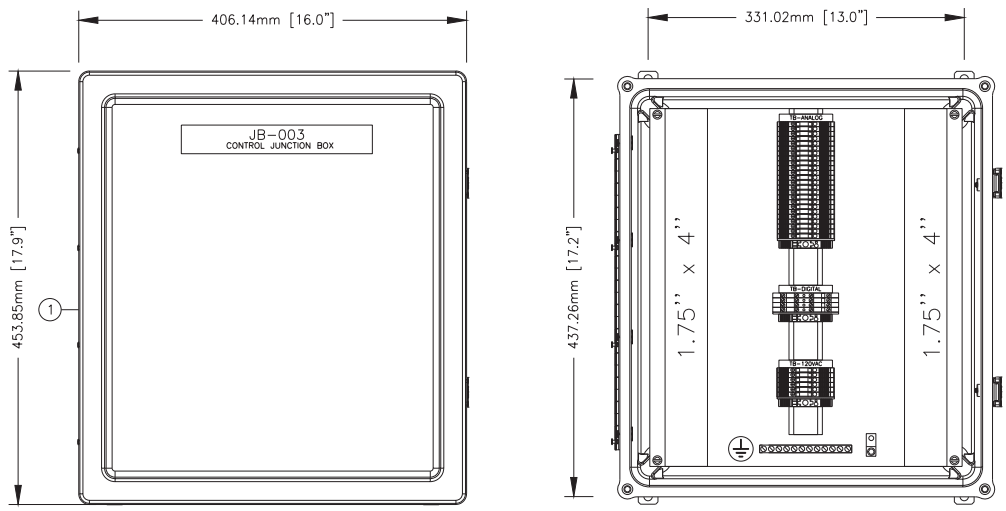


| REV | DESCRIPTION | DATE | REVD | CHKD | APVD | ECN |
|---|---|---|---|---|---|---|
| 3 | AS BUILT | 2019-03-26 | HZ | RA | - | - |
| 2 | FOR FABRICATION | 2019-03-15 | MR | RA | - | - |
| 1 | FOR APPROVAL | 2019-02-07 | HZ | RA | - | - |


CONFIDENTIALITY AND INTELLECTUAL PROPERTY NOTICE
ALL INFORMATION CONTAINED IN THIS DOCUMENT IS THE SOLE PROPERTY OF VEOLIA WATER TECHNOLOGIES CANADA INC. AND IS PROTECTED BY ALL APPLICABLE LAWS, INCLUDING BUT NOT LIMITED TO COPYRIGHT AND OTHER INTELLECTUAL PROPERTY LAWS. THE DESIGN CONCEPTS AND INFORMATION CONTAINED HEREIN ARE PROPRIETARY TO V.W.T AND ARE SUBMITTED IN CONFIDENCE. THEY ARE NOT TRANSFERABLE. THEY MUST BE USED ONLY FOR THE PURPOSE FOR WHICH THE DOCUMENT IS EXPRESSLY SUBMITTED AND NO IMPLICIT LICENCE IS GRANTED OTHERWISE BY THE SUBMISSION OF THIS DOCUMENT. THEY ARE CONFIDENTIAL AND PRIVILEGED INFORMATION OF V.W.T. AND THEY MUST NOT BE DISCLOSED, REPRODUCED, LOANED, REMITTED OR USED IN ANY OTHER MANNER WITHOUT THE EXPRESS WRITTEN CONSENT OF V.W.T. V.W.T. ASSUMES NO RESPONSIBILITY OR LIABILITY FOR THE USE OF THIS DOCUMENT OR THE DESIGN CONCEPTS AND INFORMATION CONTAINED HEREIN FOR ANOTHER PROJECT, OR IN A MANNER THAT DOES NOT RELATE TO THE FITNESS OR PURPOSE OF THIS DOCUMENT. IN NO EVENT SHALL THIS DOCUMENT OR THE DESIGN CONCEPTS AND INFORMATION CONTAINED HEREIN BE USED IN A MANNER DETRIMENTAL TO THE INTEREST OF V.W.T. ALL COPYRIGHT, PATENT AND OTHER INTELLECTUAL PROPERTY RIGHTS ARE RESERVED. ACCEPTANCE OF THE DELIVERY OF THIS DOCUMENT CONSTITUTES AGREEMENT TO THESE TERMS AND CONDITIONS.


| | | |
|---|---|---|
| DESIGNER | DATE | TITLE: JB-003 CONTROL JUNCTION BOX EXTERNAL & INTERNAL LAYOUT |
| CHECKER | DATE | CLIENT: WWTP UPGRADE CITY OF IQALUIT |
| ENGINEER | DATE | VEOLIA WATER TECHNOLOGIES CANADA INC. 4105 Sartelon, Saint-Laurent, Qc, Canada. Tel: (514) 334-7230 |
| SCALE: N/A | | PROJECT: 5000218036-EPL — DRAWING: 0004-AU-VWT — INTERNAL: - — SHEET: 03 OF 05 — REV: 3 |

BAR = 1" AT PLOT SCALE
REF: A6798B
STD: "B" 11x17

Mar 26, 2019 11:05:01 - G:\Projets A67XX\A6798A @ A6798B - VEOLIA - 5000218036 Iqaluit WWTP Upgrade\DOC\DESSIN\00-DRAWINGS\JB-003\REV 2 - Copy\5000218036-EPL-0004-AU-VWT-003.dwg - zhu

Mar 26, 2019 11:05:03 – G:\Projets A67XX\A6798A @ A6798B – VEOLIA – 5000218036 Iqaluit WWTP Upgrade\DOC\DESSIN\000-DRAWINGS\JB-003\REV 2 – Copy\5000218036-EPL-0004-AU-VWT-004.dwg – zhu

BAR = 1" AT PLOT SCALE

REF: A6798B

STD: "B" 11x17

A

| TB-ANALOG |
|---|
| TE-04-769/X |
| TE-04-769/Y |
| TE-04-769/Z |
| SH |
| TE-04-770/X |
| TE-04-770/Y |
| TE-04-770/Z |
| SH |
| TE-04-771/X |
| TE-04-771/Y |
| TE-04-771/Z |
| SH |
| PSH-04-787/+ |
| PSH-04-787/- |
| SH |
| PSH-04-793/+ |
| PSH-04-793/- |
| SH |
| PSH-04-790/+ |
| PSH-04-790/- |
| SH |
| – |
| – |
| – |

K

A

| TB-DIGITAL | |
|---|---|
| PSH-04-787/+ | PSH-04-787/- |
| PSH-04-793/+ | PSH-04-793/- |
| PSH-04-790/+ | PSH-04-790/- |
| – | – |

D

A

| TB-120VAC |
|---|
| FV-04-783/L |
| FV-04-784/L |
| – |
| N |
| N |
| N |

C

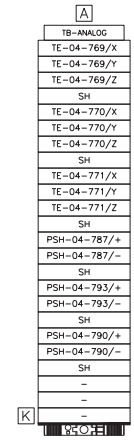

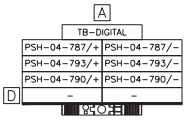

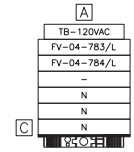

TERMINAL DESCRIPTION
A) ID(WAD8)
B) WDU6
C) WDU4
D) WDK2.5
E) DLD2.5
F) FUSE WSI 4/2
G) FUSE WSI 4
H) FUSE KDKS 1/EN4
J) WTR 2.5
K) WDU 2.5

| REV | DESCRIPTION | DATE | REVD | CHKD | APVD | ECN |
|---|---|---|---|---|---|---|
| 3 | AS BUILT | 2019-03-26 | HZ | RA | – | – |
| 2 | FOR FABRICATION | 2019-03-15 | MR | RA | – | – |
| 1 | FOR APPROVAL | 2019-02-07 | HZ | RA | – | – |

CONFIDENTIALITY AND INTELLECTUAL PROPERTY NOTICE
ALL INFORMATION CONTAINED IN THIS DOCUMENT IS THE SOLE PROPERTY OF VEOLIA WATER TECHNOLOGIES CANADA INC. AND IS PROTECTED BY ALL APPLICABLE LAWS, INCLUDING BUT NOT LIMITED TO COPYRIGHT AND OTHER INTELLECTUAL PROPERTY LAWS. THE DESIGN CONCEPTS AND INFORMATION CONTAINED HEREIN ARE PROPRIETARY TO V.W.T. AND ARE SUBMITTED IN CONFIDENCE. THEY ARE NOT TRANSFERABLE. THEY MUST BE USED ONLY FOR THE PURPOSE FOR WHICH THE DOCUMENT IS EXPRESSLY SUBMITTED AND NO IMPLICIT LICENCE IS GRANTED OTHERWISE BY THE SUBMISSION OF THIS DOCUMENT. THEY ARE CONFIDENTIAL AND PRIVILEGED INFORMATION OF V.W.T. AND THEY MUST NOT BE DISCLOSED, REPRODUCED, LOANED, REMITTED OR USED IN ANY OTHER MANNER WITHOUT THE EXPRESS WRITTEN CONSENT OF V.W.T. V.W.T. ASSUMES NO RESPONSIBILITY OR LIABILITY FOR THE USE OF THIS DOCUMENT OR THE DESIGN CONCEPTS AND INFORMATION CONTAINED HEREIN FOR ANOTHER PROJECT, OR IN A MANNER THAT DOES NOT RELATE TO THE FITNESS OR PURPOSE OF THIS DOCUMENT. IN NO EVENT SHALL THIS DOCUMENT OR THE DESIGN CONCEPTS AND INFORMATION CONTAINED HEREIN BE USED IN A MANNER DETRIMENTAL TO THE INTEREST OF V.W.T. ALL COPYRIGHT, PATENT AND OTHER INTELLECTUAL PROPERTY RIGHTS ARE RESERVED. ACCEPTANCE OF THE DELIVERY OF THIS DOCUMENT CONSTITUTES AGREEMENT TO THESE TERMS AND CONDITIONS.

| DESIGNER | DATE |
|---|---|
| – | – |
| CHECKER | DATE |
| – | – |
| ENGINEER | DATE |
| – | – |
| SCALE: N/A | |

TITLE
JB-003
CONTROL JUNCTION BOX
TERMINAL LAYOUT

CLIENT
WWTP UPGRADE
CITY OF IQALUIT

VEOLIA
VEOLIA WATER TECHNOLOGIES CANADA INC. 4105 Sartelon, Saint-Laurent, Qc, Canada. Tel: (514) 334-7230

| PROJECT | DRAWING | INTERNAL | SHEET | REV |
|---|---|---|---|---|
| 5000218036-EPL – 0004-AU-VWT | | – | 04 OF 05 | 3 |

| ITEM | DESCRIPTION | PART NUMBER | MANUF. | QTY | BY |
|---|---|---|---|---|---|
| 1 | NEMA 4X ENCLOSURE, DIM 17,87H'' X 16W'' X 8D'', FIBERGLASS REINFORCED POLYESTER, C/W PAN 14R1513 | PJ16148 | HAMMOND | 1 | ENV |
| 2 | TERMINAL 600VAC/DC, 20A WDU 2.5 C/W END PLATE 1050000000 | 1020000000 | WEIDMULLER | A/R | ENV |
| 3 | TERMINAL 600VAC/DC, 30A WDU 4 C/W END PLATE 1050000000 | 1020100000 | WEIDMULLER | A/R | ENV |
| 4 | TERMINAL 600VAC/DC, 50A WDU 6 C/W END PLATE 1050000000 OR SEPERATOR 1050100000 | 1020200000 | WEIDMULLER | A/R | ENV |
| 5 | KNIFE TERMINAL 300VAC/DC, 10A, WTR 2.5 C/W END PLATE 1050000000 | 1855610000 | WEIDMULLER | A/R | ENV |
| 6 | TERMINAL 2 LEVEL 300VAC/DC, 10A, WDK 2.5 C/W END PLATE 1059100000 | 1021500000 | WEIDMULLER | A/R | ENV |
| 7 | TERMINAL 3 LEVEL 300VAC/DC, 10A, DLD 2.5 C/W END PLATE 1784210000 | 1784180000 | WEIDMULLER | A/R | ENV |
| 8 | FUSE TERMINAL ¼ X 1¼, 300VAC/DC, 15A, WSI 4/2 C/W END PLATE 1880450000 | 1880430000 | WEIDMULLER | A/R | ENV |
| 9 | FUSE TERMINAL 5 X 20mm, 300VAC/DC, 15A, WSI 4 | 1886580000 | WEIDMULLER | A/R | ENV |
| 10 | FUSE TERMINAL 2 LEVEL 5 X 20mm, 300VAC/DC, 10A, KDKS 1/EN4 C/W END PLATE 9503330000 | 9503350000 | WEIDMULLER | A/R | ENV |
| 11 | FUSE TERMINAL 2 LEVEL ¼ X 1¼, 300VAC/DC, 10A, KDKS 1/35DB C/W END PLATE 9532470000 | 9532440000 | WEIDMULLER | A/R | ENV |
| 12 | END STOPPER WEW 35/2 | 1061200000 | WEIDMULLER | A/R | ENV |
| 13 | COPPER GROUND BAR, #4-14 | 4C-190 | NSI-INDUSTRIES | A/R | ENV |
| 14 | COPPER GROUND LUG, 600VAC, #6-14, STR | CB35-36-LY | PANDUIT | A/R | ENV |

| REV | DESCRIPTION | DATE | REVD | CHKD | APVD | ECN |
|---|---|---|---|---|---|---|
| | | | | | | |
| | | | | | | |
| | | | | | | |
| 3 | AS BUILT | 2019-03-26 | HZ | RA | – | – |
| 2 | FOR FABRICATION | 2019-03-15 | MR | RA | – | – |
| 1 | FOR APPROVAL | 2019-02-07 | HZ | RA | – | – |

**CONFIDENTIALITY AND INTELLECTUAL PROPERTY NOTICE**
ALL INFORMATION CONTAINED IN THIS DOCUMENT IS THE SOLE PROPERTY OF VEOLIA WATER TECHNOLOGIES CANADA INC. AND IS PROTECTED BY ALL APPLICABLE LAWS, INCLUDING BUT NOT LIMITED TO COPYRIGHT AND OTHER INTELLECTUAL PROPERTY LAWS. THE DESIGN CONCEPTS AND INFORMATION CONTAINED HEREIN ARE PROPRIETARY TO V.W.T. AND ARE SUBMITTED IN CONFIDENCE. THEY ARE NOT TRANSFERABLE. THEY SHALL NOT BE USED FOR ANY PURPOSE OTHER THAN THAT FOR WHICH IT IS EXPRESSLY SUBMITTED AND NO IMPLICIT LICENCE IS GRANTED OTHERWISE BY THE SUBMISSION OF THIS DOCUMENT. THEY ARE CONFIDENTIAL AND PRIVILEGED INFORMATION OF V.W.T. AND THEY MUST NOT BE DISCLOSED, REPRODUCED, LOANED, REWRITTEN OR USED IN ANY OTHER MANNER WITHOUT THE EXPRESS WRITTEN CONSENT OF V.W.T. V.W.T. ASSUMES NO RESPONSIBILITY OR LIABILITY FOR THE USE OF THIS DOCUMENT, OR OF ANY PORTION THEREOF, EITHER AS REGARDS THE INFORMATION OR ANY OPINION OR RECOMMENDATION IN IT, MANNER THAT COSTS INCURRED RELATE TO THE FITNESS OR PURPOSE OF THIS DOCUMENT. IN NO EVENT SHALL THIS DOCUMENT OR THE DESIGN CONCEPTS AND INFORMATION CONTAINED HEREIN BE USED IN A MANNER DETRIMENTAL TO THE INTEREST OF V.W.T. ALL COPYRIGHT, PATENT AND OTHER INTELLECTUAL PROPERTY RIGHTS ARE RESERVED. ACCEPTANCE OF THE DELIVERY OF THIS DOCUMENT CONSTITUTES AGREEMENT TO THESE TERMS AND CONDITIONS.

| | |
|---|---|
| DESIGNER | DATE |
| – | – |
| CHECKER | DATE |
| – | – |
| ENGINEER | DATE |
| – | – |
| SCALE: | N/A |

TITLE: JB-003
CONTROL JUNCTION BOX
BILL OF MATERIAL

CLIENT: WWTP UPGRADE
CITY OF IQALUIT

VEOLIA WATER TECHNOLOGIES CANADA INC. 4105 Sartelon, Saint-Laurent, Qc, Canada. Tel: (514) 334-7230

| PROJECT DRAWING | INTERNAL | SHEET | REV |
|---|---|---|---|
| 5000218036-EPL – 0004-AU-VWT | – | 05 OF 05 | 3 |

STD: "B" 11x17 | REF: A6798B | BAR = 1" AT PLOT SCALE

Mar 26, 2019 11:05:03 – G:\Projets A67XX\A6798A @ A6798B – VEOLIA – 5000218036 Iqaluit WWTP Upgrade\DOC\DESSIN\000-DRAWINGS\JB-003\REV 2 – Copy\5000218036-EPL-0004-AU-VW1-003.dwg – zhu

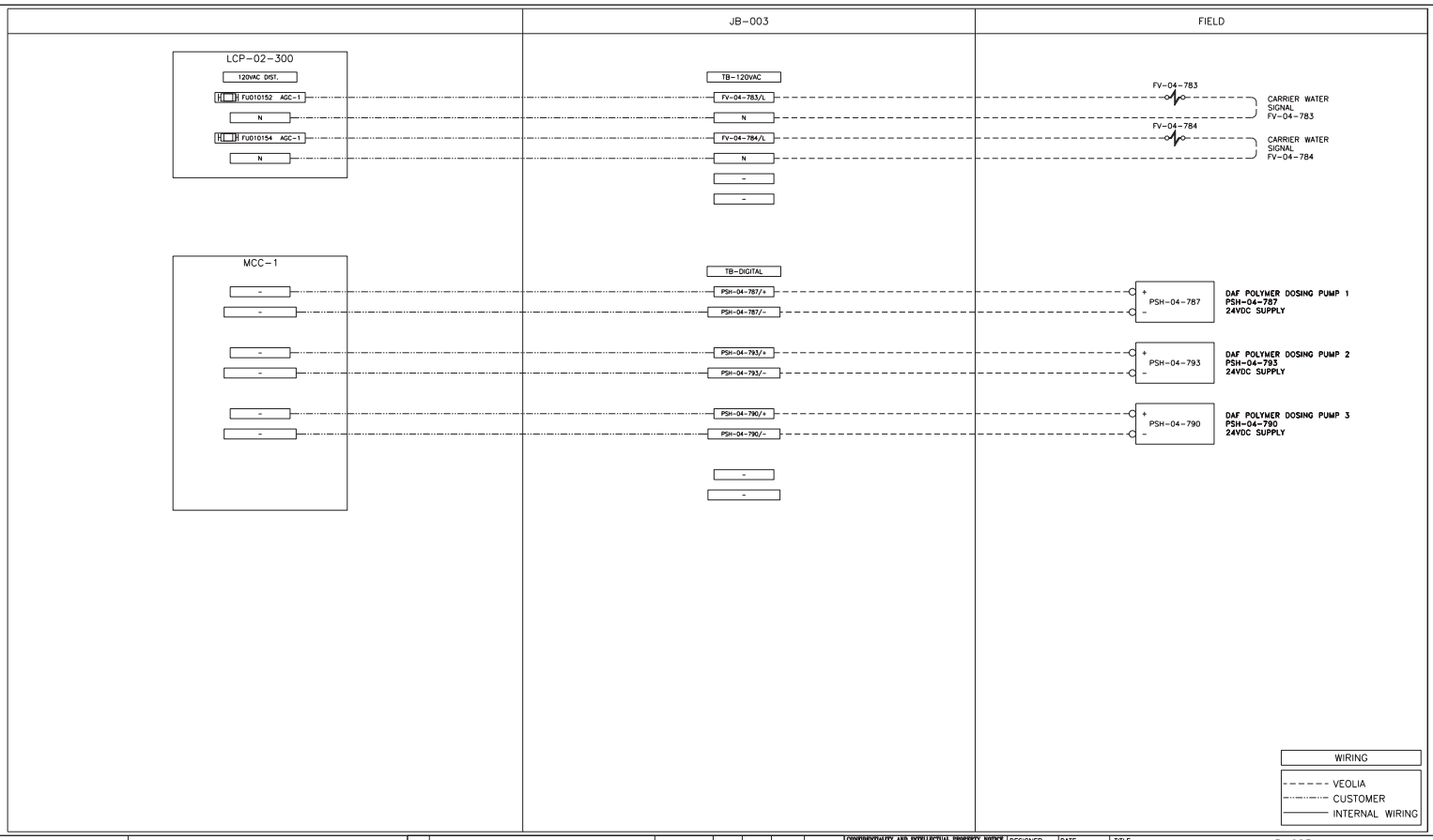


| REV | DESCRIPTION | DATE | REVD | CHKD | APVD | ECN |
|---|---|---|---|---|---|---|
| 3 | AS BUILT | 2019-03-26 | HZ | RA | – | – |
| 2 | FOR FABRICATION | 2019-03-15 | MR | RA | – | – |
| 1 | FOR APPROVAL | 2019-02-07 | HZ | RA | – | – |


**CONFIDENTIALITY AND INTELLECTUAL PROPERTY NOTICE**
ALL INFORMATION CONTAINED IN THIS DOCUMENT IS THE SOLE PROPERTY OF VEOLIA WATER TECHNOLOGIES CANADA INC. AND IS PROTECTED BY ALL APPLICABLE LAWS, INCLUDING BUT NOT LIMITED TO COPYRIGHT AND OTHER INTELLECTUAL PROPERTY LAWS. THE DESIGN CONCEPTS AND INFORMATION CONTAINED HEREIN ARE PROPRIETARY TO V.W.T. AND ARE SUBMITTED IN CONFIDENCE. THEY ARE NOT TRANSFERABLE. THEY SHALL NOT BE USED FOR ANY PURPOSE OTHER THAN THAT FOR WHICH IT IS EXPRESSLY SUBMITTED AND NO IMPLICIT LICENCE IS GRANTED OTHERWISE BY THE SUBMISSION OF THIS DOCUMENT. THEY ARE CONFIDENTIAL AND PRIVILEGED INFORMATION OF V.W.T. AND THEY MUST NOT BE DISCLOSED, REPRODUCED, LOANED, REWRITTEN OR USED IN ANY OTHER MANNER WITHOUT THE EXPRESS WRITTEN CONSENT OF V.W.T. V.W.T. ASSUMES NO RESPONSIBILITY OR LIABILITY FOR THE USE OF THIS DOCUMENT IN WHOLE OR IN PART IN ANY OTHER CONTEXT OR FOR ANY PURPOSE OTHER THAN THE SPECIFIC PROJECT FOR WHICH IT WAS PREPARED BY V.W.T. IN A MANNER THAT COSTS INCURRED RELATIVE TO THE FITNESS OR PURPOSE OF THIS DOCUMENT. IN NO EVENT SHALL THIS DOCUMENT OR THE DESIGN CONCEPTS AND INFORMATION CONTAINED HEREIN BE USED IN A MANNER DETRIMENTAL TO THE INTEREST OF V.W.T. ALL COPYRIGHT, PATENT AND OTHER INTELLECTUAL PROPERTY RIGHTS ARE RESERVED. ACCEPTANCE OF THE DELIVERY OF THIS DOCUMENT CONSTITUTES AGREEMENT TO THESE TERMS AND CONDITIONS.


| | | DATE |
|---|---|---|
| DESIGNER | – | – |
| CHECKER | – | – |
| ENGINEER | – | – |
| SCALE: | N/A | |

TITLE: JB-003
CONTROL JUNCTION BOX
FIELD WIRING

CLIENT: WWTP UPGRADE
CITY OF IQALUIT

VEOLIA
VEOLIA WATER TECHNOLOGIES CANADA INC. 4105 Sartelon, Saint-Laurent, Qc, Canada. Tel: (514) 334-7230

| PROJECT DRAWING | INTERNAL | SHEET | REV |
|---|---|---|---|
| 5000218036-EID – 0004-AU-VWT | – | 01 OF 02 | 3 |

STD: "B" 11x17 | REF: A6798B | BAR = 1" AT PLOT SCALE

Mar 26, 2019 11:05:06 – G:\Projets A67xx\A6798A @ A6798B – VEOLIA – 5000218036 Iqaluit WWTP Upgrade\DOC\DESSIN\000-DRAWINGS\JB-003\REV 2 – Copy\5000218036-EID-0004-AU-VWT-001.dwg – zhu

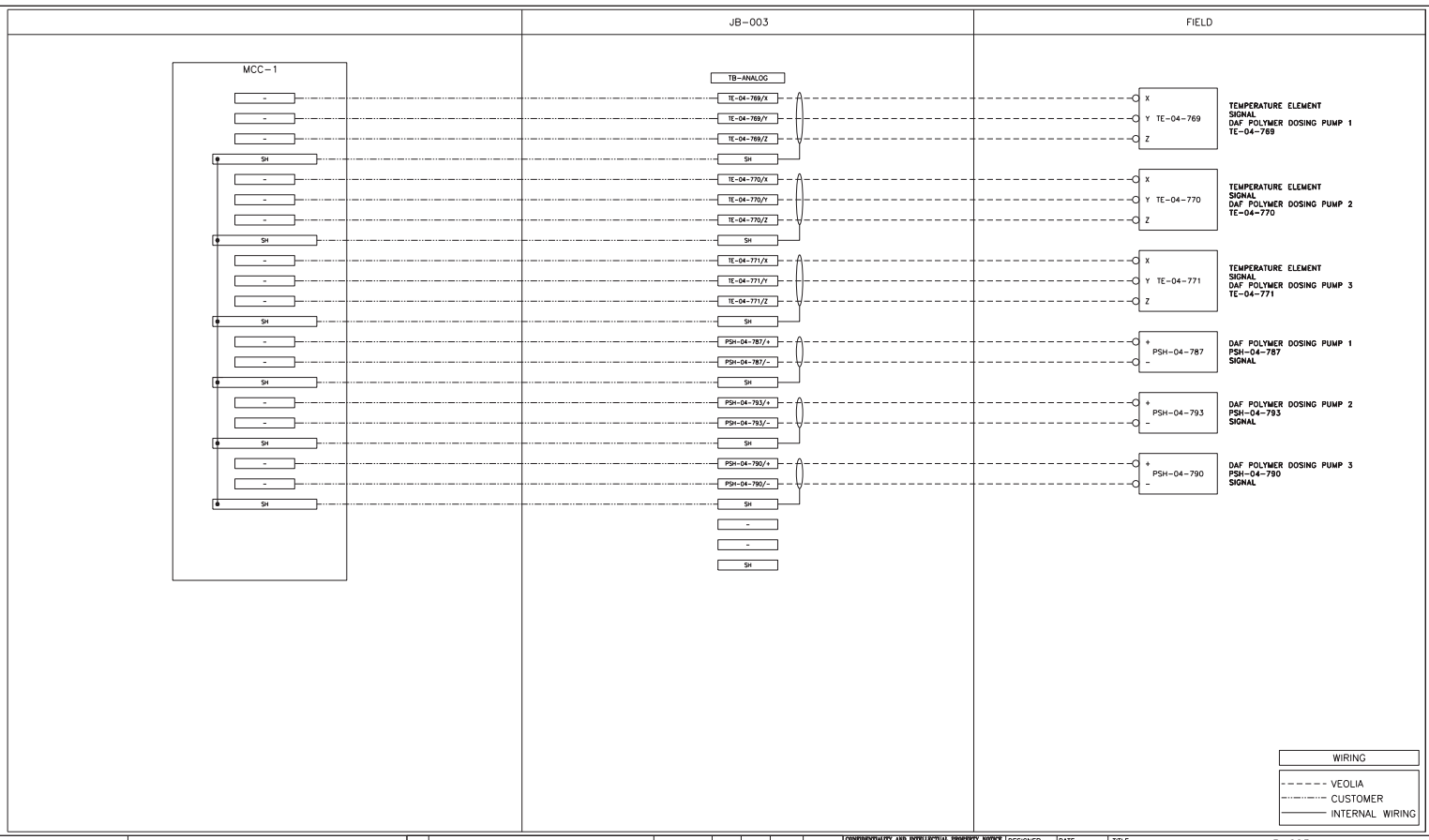


| REV | DESCRIPTION | DATE | REVD | CHKD | APVD | ECN |
|---|---|---|---|---|---|---|
| 3 | AS BUILT | 2019-03-26 | HZ | RA | - | - |
| 2 | FOR FABRICATION | 2019-03-15 | MR | RA | - | - |
| 1 | FOR APPROVAL | 2019-02-07 | HZ | RA | - | - |


CONFIDENTIALITY AND INTELLECTUAL PROPERTY NOTICE
ALL INFORMATION CONTAINED IN THIS DOCUMENT IS THE SOLE PROPERTY OF VEOLIA WATER TECHNOLOGIES CANADA INC. AND IS PROTECTED BY ALL APPLICABLE LAWS, INCLUDING BUT NOT LIMITED TO COPYRIGHT AND OTHER INTELLECTUAL PROPERTY LAWS. THE DESIGN CONCEPTS AND INFORMATION CONTAINED HEREIN ARE PROPRIETARY TO V.W.T. AND ARE SUBMITTED IN CONFIDENCE. THEY ARE NOT TRANSFERABLE. THEY MUST BE USED ONLY FOR THE PURPOSE FOR WHICH THE DOCUMENT IS EXPRESSLY SUBMITTED AND NO IMPLICIT LICENCE IS GRANTED OTHERWISE BY THE SUBMISSION OF THIS DOCUMENT. THEY ARE CONFIDENTIAL AND PRIVILEGED INFORMATION OF V.W.T. AND THEY MUST NOT BE DISCLOSED, REPRODUCED, LOANED, REMITTED OR USED IN ANY OTHER MANNER WITHOUT THE EXPRESS WRITTEN CONSENT OF V.W.T. V.W.T. ASSUMES NO RESPONSIBILITY OR LIABILITY FOR THE USE OF THIS DOCUMENT OR THE DESIGN CONCEPTS AND INFORMATION CONTAINED HEREIN FOR ANOTHER PROJECT, OR IN A MANNER THAT DOES NOT RELATE TO THE FITNESS OR PURPOSE OF THIS DOCUMENT. IN NO EVENT SHALL THIS DOCUMENT OR THE DESIGN CONCEPTS AND INFORMATION CONTAINED HEREIN BE USED IN A MANNER DETRIMENTAL TO THE INTEREST OF V.W.T. ALL COPYRIGHT, PATENT AND OTHER INTELLECTUAL PROPERTY RIGHTS ARE RESERVED. ACCEPTANCE OF THE DELIVERY OF THIS DOCUMENT CONSTITUTES AGREEMENT TO THESE TERMS AND CONDITIONS.


| | | |
|---|---|---|
| DESIGNER | DATE | TITLE: JB-003 CONTROL JUNCTION BOX FIELD WIRING |
| CHECKER | DATE | CLIENT: WWTP UPGRADE CITY OF IQALUIT |
| ENGINEER | DATE | VEOLIA |
| SCALE: N/A | | VEOLIA WATER TECHNOLOGIES CANADA INC. 4105 Sartelon, Saint-Laurent, Qc, Canada. Tel: (514) 334-7230 |

| PROJECT | DRAWING | INTERNAL | SHEET | REV |
|---|---|---|---|---|
| 5000218036-EID | 0004-AU-VWT | - | 02 OF 02 | 3 |

BAR = 1" AT PLOT SCALE

REF: A6798B

STD: "B" 11x17

Mar 26, 2019 11:05:07 - G:\Projets A67XX\A6798A @ A6798B - VEOLIA - 5000218036 Iqaluit WWTP Upgrade\DOC\DESSIN\000-DRAWINGS\JB-003\REV 2 - Copy\5000218036-EID-0004-AU-VWT-002.dwg - zhu

Mar 26, 2019 11:15:24 - G:\Projets A67XX\A6798A @ A6798B - VEOLIA - 5000218036 Iqaluit WWTP Upgrade\DOC\DESSIN\000-DRAWINGS\JB-004\REV 3
AS BUILT\5000218036-EPL-0005-AU-VWT-001.dwg - zhu

# WWTP UPGRADE
# CITY OF IQALUIT
# CONTROL JUNCTION BOX
# JB-004 BFP polymer dosing skid
# PROJECT: 5000218036

| REV | DESCRIPTION | DATE | REVD | CHKD | APVD | ECN |
|---|---|---|---|---|---|---|
| 3 | AS BUILT | 2019-03-26 | HZ | RA | - | - |
| 2 | FOR FABRICATION | 2019-03-15 | MR | RA | - | - |
| 1 | FOR APPROVAL | 2019-02-07 | HZ | RA | - | - |

**CONFIDENTIALITY AND INTELLECTUAL PROPERTY NOTICE**
ALL INFORMATION CONTAINED IN THIS DOCUMENT IS THE SOLE PROPERTY OF VEOLIA WATER TECHNOLOGIES CANADA INC. AND IS PROTECTED BY ALL APPLICABLE LAWS, INCLUDING BUT NOT LIMITED TO COPYRIGHT AND OTHER INTELLECTUAL PROPERTY LAWS. THE DESIGN CONCEPTS AND INFORMATION CONTAINED HEREIN ARE PROPRIETARY TO V.W.T. AND ARE SUBMITTED IN CONFIDENCE. THEY ARE NOT TRANSFERABLE. THEY MUST BE USED ONLY FOR THE PURPOSE FOR WHICH THE DOCUMENT IS EXPRESSLY SUBMITTED AND NO IMPLICIT LICENCE IS GRANTED OTHERWISE BY THE SUBMISSION OF THIS DOCUMENT. THEY ARE CONFIDENTIAL AND PRIVILEGED INFORMATION OF V.W.T. AND THEY MUST NOT BE DISCLOSED, REPRODUCED, LOANED, REMITTED OR USED IN ANY OTHER MANNER WITHOUT THE EXPRESS WRITTEN CONSENT OF V.W.T. V.W.T. ASSUMES NO RESPONSIBILITY OR LIABILITY FOR THE USE OF THIS DOCUMENT OR THE DESIGN CONCEPTS AND INFORMATION CONTAINED HEREIN FOR ANOTHER PROJECT, OR IN A MANNER THAT DOES NOT RELATE TO THE FITNESS OR PURPOSE OF THIS DOCUMENT. IN NO EVENT SHALL THIS DOCUMENT OR THE DESIGN CONCEPTS AND INFORMATION CONTAINED HEREIN BE USED IN A MANNER DETRIMENTAL TO THE INTEREST OF V.W.T. ALL COPYRIGHT, PATENT AND OTHER INTELLECTUAL PROPERTY RIGHTS ARE RESERVED. ACCEPTANCE OF THE DELIVERY OF THIS DOCUMENT CONSTITUTES AGREEMENT TO THESE TERMS AND CONDITIONS.

| DESIGNER | DATE |
|---|---|
| - | - |
| CHECKER | DATE |
| - | - |
| ENGINEER | DATE |
| - | - |
| SCALE: N/A | |

TITLE: JB-004 CONTROL JUNCTION BOX TITLE PAGE

CLIENT: WWTP UPGRADE CITY OF IQALUIT

VEOLIA

VEOLIA WATER TECHNOLOGIES CANADA INC. 4105 Sartelon, Saint-Laurent, Qc, Canada. Tel: (514) 334-7230

| PROJECT | DRAWING | INTERNAL | SHEET | REV |
|---|---|---|---|---|
| 5000218036-EPL | 0005-AU-VWT | - | 01 OF 05 | 3 |

BAR = 1" AT PLOT SCALE
REF: A6798B
STD: "B" 11x17

DRAWING LIST

| DESCRIPTION | DRAWING NUMBER |
|---|---|
| CONTROL JUNCTION BOX JB-004 | |
| TITLE PAGE | 5000218036-EPL-0005-AU-VWT-001 |
| LEGEND & DRAWING LIST | 5000218036-EPL-0005-AU-VWT-002 |
| EXTERNAL & INTERNAL LAYOUT | 5000218036-EPL-0005-AU-VWT-003 |
| BILL OF MATERIAL | 5000218036-EPL-0005-AU-VWT-004 |
| TERMINAL LAYOUT | 5000218036-EPL-0005-AU-VWT-005 |
| FIELD WIRING | 5000218036-EID-0005-AU-VWT-001 |
| FIELD WIRING | 5000218036-EID-0005-AU-VWT-002 |

LEGEND

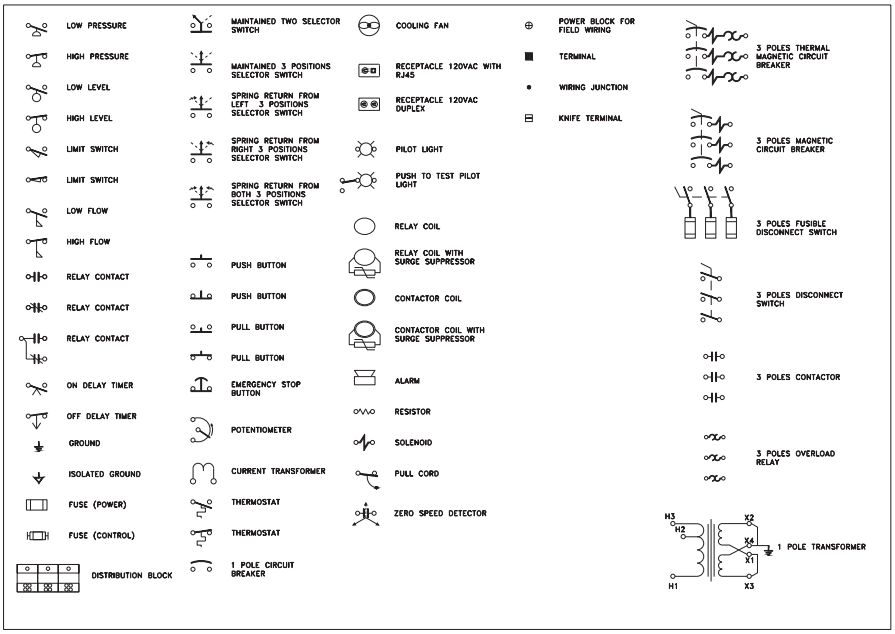


| WIRE COLOR CODE | |
|---|---|
| MINIMAL 18AWG GAUGE | |
| POWER 120VAC | BLACK |
| CONTROL 120VAC | RED |
| NEUTRAL | WHITE |
| 24VDC | BLUE |
| 0VDC | BLUE/WHITE |
| DRY CONTRACT | YELLOW, 14AWG |
| NON-ISOLATED GROUND | GREEN |
| ISOLATED GROUND | GREEN/YELLOW |
| TWISTED PAIR | (+) BLACK & (-) WHITE |

| REV | DESCRIPTION | DATE | REVD | CHKD | APVD | ECN |
|---|---|---|---|---|---|---|
| 3 | AS BUILT | 2019-03-26 | HZ | RA | - | - |
| 2 | FOR FABRICATION | 2019-03-15 | MR | RA | - | - |
| 1 | FOR APPROVAL | 2019-02-07 | HZ | RA | - | - |


CONFIDENTIALITY AND INTELLECTUAL PROPERTY NOTICE
ALL INFORMATION CONTAINED IN THIS DOCUMENT IS THE SOLE PROPERTY OF VEOLIA WATER TECHNOLOGIES CANADA INC. AND IS PROTECTED BY ALL APPLICABLE LAWS, INCLUDING BUT NOT LIMITED TO COPYRIGHT AND OTHER INTELLECTUAL PROPERTY LAWS. THE DESIGN CONCEPTS AND INFORMATION CONTAINED HEREIN ARE PROPRIETARY TO V.W.T. AND ARE SUBMITTED IN CONFIDENCE. THEY ARE NOT TRANSFERRED, NOR IS THE RECEIVER GIVEN ANY RIGHT TO USE THEM, EXCEPT AS MAY BE EXPRESSLY AGREED IN WRITING. THEY ARE EXPRESSLY SUBMITTED AND NO IMPLICIT LICENCE IS GRANTED OTHERWISE BY THE SUBMISSION OF THIS DOCUMENT. THEY ARE CONFIDENTIAL AND PRIVILEGED INFORMATION OF V.W.T. AND THEY MUST NOT BE DISCLOSED, REPRODUCED, LOANED, REWRITED OR USED IN ANY OTHER MANNER WITHOUT THE EXPRESS WRITTEN CONSENT OF V.W.T. V.W.T. ASSUMES NO RESPONSIBILITY OR LIABILITY FOR THE USE OF THIS DOCUMENT, OR PORTIONS THEREOF, BY ANY PARTY OTHER THAN THE PERSON TO WHOM IT IS DELIVERED OR IN A MANNER THAT DOES NOT RELATE TO THE FITNESS OR PURPOSE OF THIS DOCUMENT. IN NO EVENT SHALL THIS DOCUMENT OR THE DESIGN CONCEPTS AND INFORMATION CONTAINED HEREIN BE USED IN A MANNER DETRIMENTAL TO THE INTEREST OF V.W.T. ALL COPYRIGHT, PATENT AND OTHER INTELLECTUAL PROPERTY RIGHTS ARE RESERVED. ACCEPTANCE OF THE DELIVERY OF THIS DOCUMENT CONSTITUTES AGREEMENT TO THESE TERMS AND CONDITIONS.


| | |
|---|---|
| DESIGNER | DATE - |
| CHECKER | DATE - |
| ENGINEER | DATE - |
| SCALE: | N/A |

TITLE: JB-004 CONTROL JUNCTION BOX LEGEND & DRAWING LIST

CLIENT: WWTP UPGRADE CITY OF IQALUIT

VEOLIA WATER TECHNOLOGIES CANADA INC. 4105 Sartelon, Saint-Laurent, Qc, Canada, Tel: (514) 334-7230

| PROJECT | DRAWING | INTERNAL | SHEET | REV |
|---|---|---|---|---|
| 5000218036-EPL | 0005-AU-VWT | - | 02 OF 05 | 3 |


Mar 26, 2019 11:15:26 - G:\Projets A67XX\A6798A @ A6798B - VEOLIA - 5000218036 Iqaluit WWTP Upgrade\DOC\DESSIN\000-DRAWINGS\JB-004\REV 3 AS BUILT\5000218036-EPL-0005-AU-VWT-002.dwg - zhu

BAR = 1" AT PLOT SCALE
REF: A6798B
STD: "B" 11x17

ENCLOSURE NEMA 4X–FIBERGLASS / 17,87H'' X 16W'' X 8D'' (PJ16148)
cUL APPROVAL

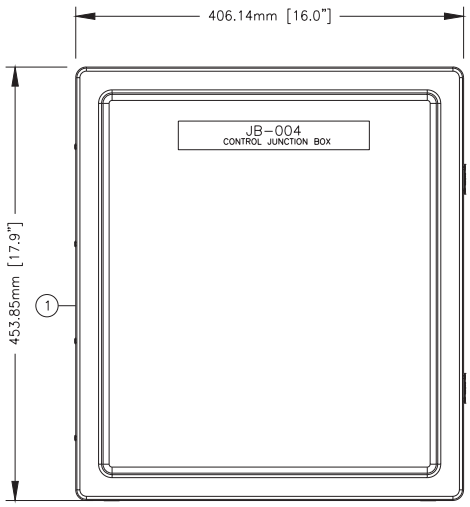


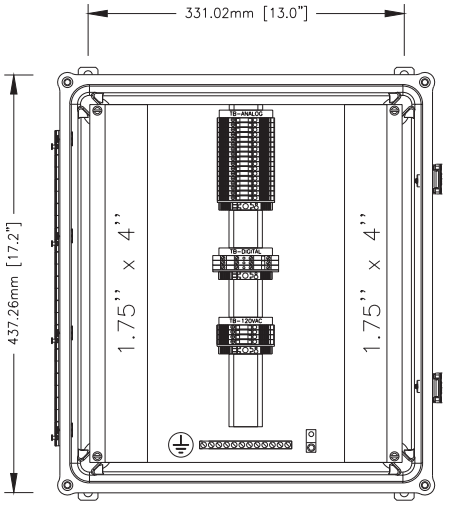


| REV | DESCRIPTION | DATE | REVD | CHKD | APVD | ECN |
|---|---|---|---|---|---|---|
| | | | | | | |
| | | | | | | |
| | | | | | | |
| 3 | AS BUILT | 2019–03–26 | HZ | RA | – | – |
| 2 | FOR FABRICATION | 2019–03–15 | MR | RA | – | – |
| 1 | FOR APPROVAL | 2019–02–07 | HZ | RA | – | – |

CONFIDENTIALITY AND INTELLECTUAL PROPERTY NOTICE
ALL INFORMATION CONTAINED IN THIS DOCUMENT IS THE SOLE PROPERTY OF VEOLIA WATER TECHNOLOGIES CANADA INC. AND IS PROTECTED BY ALL APPLICABLE LAWS, INCLUDING BUT NOT LIMITED TO COPYRIGHT AND OTHER INTELLECTUAL PROPERTY LAWS. THE DESIGN CONCEPTS AND INFORMATION CONTAINED HEREIN ARE PROPRIETARY TO V.W.T. AND ARE SUBMITTED IN CONFIDENCE. IT THEY ARE NOT TRANSFERABLE. THEY MUST NOT BE DISCLOSED, REPRODUCED, LOANED, REMITTED OR USED IN ANY OTHER MANNER WITHOUT THE EXPRESS WRITTEN CONSENT OF V.W.T. IT IS EXPRESSLY SUBMITTED AND NO IMPLICIT LICENCE IS GRANTED OTHERWISE BY THE SUBMISSION OF THIS DOCUMENT. THEY ARE CONFIDENTIAL AND PRIVILEGED INFORMATION OF V.W.T. AND THEY MUST NOT BE DISCLOSED, REPRODUCED, LOANED, REMITTED OR USED IN ANY OTHER MANNER WITHOUT THE EXPRESS WRITTEN CONSENT OF V.W.T.. V.W.T. ASSUMES NO RESPONSIBILITY OR LIABILITY FOR THE USE OF THIS DOCUMENT, OR OF THE DESIGN CONCEPTS OR INFORMATION CONTAINED HEREIN, FOR PURPOSES OTHER THAN THOSE SPECIFICALLY RELATED TO THE FITNESS OR PURPOSE OF THIS DOCUMENT. IN NO EVENT SHALL THIS DOCUMENT OF THE DESIGN CONCEPTS AND INFORMATION CONTAINED HEREIN BE USED IN A MANNER DETRIMENTAL TO THE INTEREST OF V.W.T. ALL COPYRIGHT, PATENT AND OTHER INTELLECTUAL PROPERTY RIGHTS ARE RESERVED. ACCEPTANCE OF THE DELIVERY OF THIS DOCUMENT CONSTITUTES AGREEMENT TO THESE TERMS AND CONDITIONS.

| | | |
|---|---|---|
| DESIGNER | – | DATE – |
| CHECKER | – | DATE – |
| ENGINEER | – | DATE – |
| SCALE: | N/A | |

TITLE: JB–004
CONTROL JUNCTION BOX
EXTERNAL & INTERNAL LAYOUT

CLIENT: WWTP UPGRADE
CITY OF IQALUIT

VEOLIA WATER TECHNOLOGIES CANADA INC. 4105 Sartelon, Saint-Laurent, Qc. Canada. Tel: (514) 334-7230

| PROJECT DRAWING | INTERNAL | SHEET | REV |
|---|---|---|---|
| 500021803G–EPL – 0005–AU–VWT | – | 03 OF 05 | 3 |

Mar 26, 2019 11:15:27 – G:\Projets A67xx\A6798A @ A6798B – VEOLIA – 500021803G Iqaluit WWTP Upgrade\DOC\DESSIN\000–DRAWINGS\JB–004\REV 3
AS BUILT\500021803G–EPL–0005–AU–VWT–003.dwg – zhu
BAR = 1" AT PLOT SCALE
REF: A6798B
STD: "B" 11x17

Mar 26, 2019 11:15:29 - G:\Projets A67XX\A6798A @ A6798B - VEOLIA - 5000218036 Iqaluit WWTP Upgrade\DOC\DESSIN\000-DRAWINGS\JB-004\REV 3
AS BUILT\5000218036-EPL-0005-AU-VWT-004.dwg - zhu

BAR = 1" AT PLOT SCALE

REF: A6798B

STD: "B" 11x17

A

| TB-ANALOG |
|---|
| TE-04-966/X |
| TE-04-966/Y |
| TE-04-966/Z |
| SH |
| TE-04-967/X |
| TE-04-967/Y |
| TE-04-967/Z |
| SH |
| PSH-04-987/+ |
| PSH-04-987/- |
| SH |
| PSH-04-990/+ |
| PSH-04-990/- |
| SH |
| - |
| - |
| - |

K

A

| TB-DIGITAL | |
|---|---|
| PSH-04-987/+ | PSH-04-987/- |
| PSH-04-990/+ | PSH-04-990/- |
| - | - |

D

A

| TB-120VAC |
|---|
| SV-04-982/L |
| - |
| N |
| N |

C

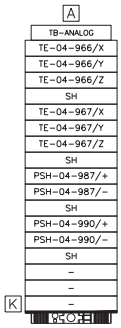

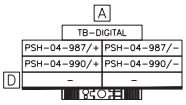

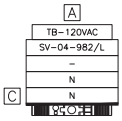

TERMINAL DESCRIPTION
A) ID(WAD8)
B) WDU6
C) WDU4
D) WDK2.5
E) DLD2.5
F) FUSE WSI 4/2
G) FUSE WSI 4
H) FUSE KDKS 1/EN4
J) WTR 2.5
K) WDU 2.5

| REV | DESCRIPTION | DATE | REVD | CHKD | APVD | ECN |
|---|---|---|---|---|---|---|
| 3 | AS BUILT | 2019-03-26 | HZ | RA | - | - |
| 2 | FOR FABRICATION | 2019-03-15 | MR | RA | - | - |
| 1 | FOR APPROVAL | 2019-02-07 | HZ | RA | - | - |

CONFIDENTIALITY AND INTELLECTUAL PROPERTY NOTICE
ALL INFORMATION CONTAINED IN THIS DOCUMENT IS THE SOLE PROPERTY OF VEOLIA WATER TECHNOLOGIES CANADA INC. AND IS PROTECTED BY ALL APPLICABLE LAWS, INCLUDING BUT NOT LIMITED TO COPYRIGHT AND OTHER INTELLECTUAL PROPERTY LAWS. THE DESIGN CONCEPTS AND INFORMATION CONTAINED HEREIN ARE PROPRIETARY TO V.W.T. AND ARE SUBMITTED IN CONFIDENCE. THEY ARE NOT TRANSFERABLE. THEY MUST BE USED ONLY FOR THE PURPOSE FOR WHICH THE DOCUMENT IS EXPRESSLY SUBMITTED AND NO IMPLICIT LICENCE IS GRANTED OTHERWISE BY THE SUBMISSION OF THIS DOCUMENT. THEY ARE CONFIDENTIAL AND PRIVILEGED INFORMATION OF V.W.T. AND THEY MUST NOT BE DISCLOSED, REPRODUCED, LOANED, REMITTED OR USED IN ANY OTHER MANNER WITHOUT THE EXPRESS WRITTEN CONSENT OF V.W.T. V.W.T. ASSUMES NO RESPONSIBILITY OR LIABILITY FOR THE USE OF THIS DOCUMENT OR THE DESIGN CONCEPTS AND INFORMATION CONTAINED HEREIN FOR ANOTHER PROJECT, OR IN A MANNER THAT DOES NOT RELATE TO THE FITNESS OR PURPOSE OF THIS DOCUMENT. IN NO EVENT SHALL THIS DOCUMENT OR THE DESIGN CONCEPTS AND INFORMATION CONTAINED HEREIN BE USED IN A MANNER DETRIMENTAL TO THE INTEREST OF V.W.T. ALL COPYRIGHT, PATENT AND OTHER INTELLECTUAL PROPERTY RIGHTS ARE RESERVED. ACCEPTANCE OF THE DELIVERY OF THIS DOCUMENT CONSTITUTES AGREEMENT TO THESE TERMS AND CONDITIONS.

| DESIGNER | DATE |
|---|---|
| - | - |
| CHECKER | DATE |
| - | - |
| ENGINEER | DATE |
| - | - |
| SCALE: N/A | |

TITLE: JB-004
CONTROL JUNCTION BOX
TERMINAL LAYOUT

CLIENT: WWTP UPGRADE
CITY OF IQALUIT

VEOLIA
VEOLIA WATER TECHNOLOGIES CANADA INC. 4105 Sandton, Saint-Laurent, Qc, Canada. Tel: (514) 334-7230

| PROJECT | DRAWING | INTERNAL | SHEET | REV |
|---|---|---|---|---|
| 5000218036-EPL | 0005-AU-VWT | - | 04 OF 05 | 3 |

| ITEM | DESCRIPTION | PART NUMBER | MANUF. | QTY | BY |
|---|---|---|---|---|---|
| 1 | NEMA 4X ENCLOSURE, DIM 17,87H'' X 16W'' X 8D'', FIBERGLASS REINFORCED POLYESTER, C/W PAN 14R1513 | PJ16148 | HAMMOND | 1 | ENV |
| 2 | TERMINAL 600VAC/DC, 20A WDU 2.5 C/W END PLATE 1050000000 | 1020000000 | WEIDMULLER | A/R | ENV |
| 3 | TERMINAL 600VAC/DC, 30A WDU 4 C/W END PLATE 1050000000 | 1020100000 | WEIDMULLER | A/R | ENV |
| 4 | TERMINAL 600VAC/DC, 50A WDU 6 C/W END PLATE 1050000000 OR SEPERATOR 1050100000 | 1020200000 | WEIDMULLER | A/R | ENV |
| 5 | KNIFE TERMINAL 300VAC/DC, 10A, WTR 2.5 C/W END PLATE 1050000000 | 1855610000 | WEIDMULLER | A/R | ENV |
| 6 | TERMINAL 2 LEVEL 300VAC/DC, 10A, WDK 2.5 C/W END PLATE 1059100000 | 1021500000 | WEIDMULLER | A/R | ENV |
| 7 | TERMINAL 3 LEVEL 300VAC/DC, 10A, DLD 2.5 C/W END PLATE 1784210000 | 1784180000 | WEIDMULLER | A/R | ENV |
| 8 | FUSE TERMINAL ¼ X 1¼, 300VAC/DC, 15A, WSI 4/2 C/W END PLATE 1880450000 | 1880430000 | WEIDMULLER | A/R | ENV |
| 9 | FUSE TERMINAL 5 X 20mm, 300VAC/DC, 15A, WSI 4 | 1886580000 | WEIDMULLER | A/R | ENV |
| 10 | FUSE TERMINAL 2 LEVEL 5 X 20mm, 300VAC/DC, 10A, KDKS 1/EN4 C/W END PLATE 9503330000 | 9503350000 | WEIDMULLER | A/R | ENV |
| 11 | FUSE TERMINAL 2 LEVEL ¼ X 1¼, 300VAC/DC, 10A, KDKS 1/35DB C/W END PLATE 9532470000 | 9532440000 | WEIDMULLER | A/R | ENV |
| 12 | END STOPPER WEW 35/2 | 1061200000 | WEIDMULLER | A/R | ENV |
| 13 | COPPER GROUND BAR, #4-14 | 4C-190 | NSI-INDUSTRIES | A/R | ENV |
| 14 | COPPER GROUND LUG, 600VAC, #6-14, STR | CB35-36-LY | PANDUIT | A/R | ENV |

| REV | DESCRIPTION | DATE | REVD | CHKD | APVD | ECN |
|---|---|---|---|---|---|---|
| | | | | | | |
| | | | | | | |
| | | | | | | |
| 3 | AS BUILT | 2019-03-26 | HZ | RA | – | – |
| 2 | FOR FABRICATION | 2019-03-15 | MR | RA | – | – |
| 1 | FOR APPROVAL | 2019-02-07 | HZ | RA | – | – |

CONFIDENTIALITY AND INTELLECTUAL PROPERTY NOTICE
ALL INFORMATION CONTAINED IN THIS DOCUMENT IS THE SOLE PROPERTY OF VEOLIA WATER TECHNOLOGIES CANADA INC. AND IS PROTECTED BY ALL APPLICABLE LAWS, INCLUDING BUT NOT LIMITED TO COPYRIGHT AND OTHER INTELLECTUAL PROPERTY LAWS. THE DESIGN CONCEPTS AND INFORMATION CONTAINED HEREIN ARE PROPRIETARY TO V.W.T. AND ARE SUBMITTED IN CONFIDENCE. THEY ARE NOT TRANSFERABLE. THEY SHALL NOT BE USED IN WHOLE OR IN PART FOR ANY PURPOSE EXCEPT AS IS EXPRESSLY SUBMITTED AND NO IMPLICIT LICENCE IS GRANTED OTHERWISE BY THE SUBMISSION OF THIS DOCUMENT. THEY ARE CONFIDENTIAL AND PRIVILEGED INFORMATION OF V.W.T. AND THEY MUST NOT BE DISCLOSED, REPRODUCED, LOANED, REWRITTEN OR USED IN ANY OTHER MANNER WITHOUT THE EXPRESS WRITTEN CONSENT OF V.W.T. V.W.T. ASSUMES NO RESPONSIBILITY OR LIABILITY FOR THE USE OF THIS DOCUMENT, OR OF ANY INFORMATION, DESIGN OR CONCEPT CONTAINED THEREIN, FOR PURPOSES OTHER THAN THOSE EXPRESSLY SUBMITTED. WITH RESPECT TO THE FITNESS OR PURPOSE OF THIS DOCUMENT. IN NO EVENT SHALL THIS DOCUMENT OR THE DESIGN CONCEPTS AND INFORMATION CONTAINED HEREIN BE USED IN A MANNER DETRIMENTAL TO THE INTEREST OF V.W.T. ALL COPYRIGHT, PATENT AND OTHER INTELLECTUAL PROPERTY RIGHTS ARE RESERVED. ACCEPTANCE OF THE DELIVERY OF THIS DOCUMENT CONSTITUTES AGREEMENT TO THESE TERMS AND CONDITIONS.

| | | DATE |
|---|---|---|
| DESIGNER | – | – |
| CHECKER | – | – |
| ENGINEER | – | – |
| SCALE: | N/A | |

TITLE: JB-004
CONTROL JUNCTION BOX
BILL OF MATERIAL

CLIENT: WWTP UPGRADE
CITY OF IQALUIT

VEOLIA WATER TECHNOLOGIES CANADA INC. 4105 Sartelon, Saint-Laurent, Qc, Canada. Tel: (514) 334-7230

| PROJECT DRAWING | INTERNAL | SHEET | REV |
|---|---|---|---|
| 500021803G-EPL – 0005-AU-VWT | – | 05 OF 05 | 3 |

BAR = 1" AT PLOT SCALE
REF: A6798B
STD: "B" 11x17

Mar 26, 2019 11:15:29 - G:\Projets A67xx\A6798A @ A6798B - VEOLIA - 500021803G Iqaluit WWTP Upgrade\DOC\DESIN\000-DRAWINGS\JB-004\REV 3
AS BUILT\500021803G-EPL-0005-AU-VWT-005.dwg - zhu

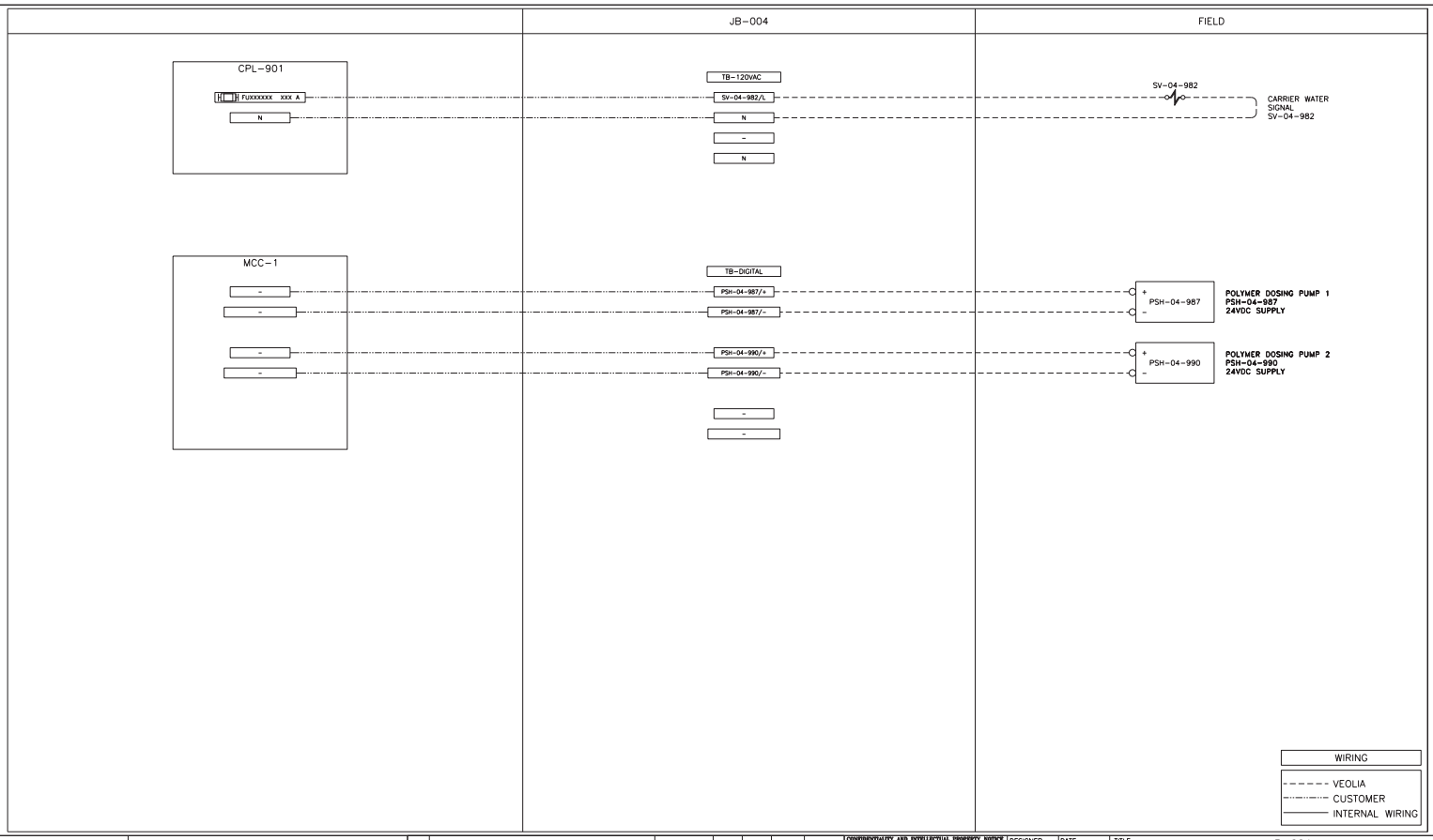


| REV | DESCRIPTION | DATE | REVD | CHKD | APVD | ECN |
|---|---|---|---|---|---|---|
| 3 | AS BUILT | 2019-03-26 | HZ | RA | - | - |
| 2 | FOR FABRICATION | 2019-03-15 | MR | RA | - | - |
| 1 | FOR APPROVAL | 2019-02-07 | HZ | RA | - | - |

CONFIDENTIALITY AND INTELLECTUAL PROPERTY NOTICE
ALL INFORMATION CONTAINED IN THIS DOCUMENT IS THE SOLE PROPERTY OF VEOLIA WATER TECHNOLOGIES CANADA INC. AND IS PROTECTED BY ALL APPLICABLE LAWS, INCLUDING BUT NOT LIMITED TO COPYRIGHT AND OTHER INTELLECTUAL PROPERTY LAWS. THE DESIGN CONCEPTS AND INFORMATION CONTAINED HEREIN ARE PROPRIETARY TO V.W.T. AND ARE SUBMITTED IN CONFIDENCE. THEY ARE NOT TRANSFERABLE. THEY MUST BE USED ONLY FOR THE PURPOSE FOR WHICH THE DOCUMENT IS EXPRESSLY SUBMITTED AND NO IMPLICIT LICENCE IS GRANTED OTHERWISE BY THE SUBMISSION OF THIS DOCUMENT. THEY ARE CONFIDENTIAL AND PRIVILEGED INFORMATION OF V.W.T. AND THEY MUST NOT BE DISCLOSED, REPRODUCED, LOANED, REMITTED OR USED IN ANY OTHER MANNER WITHOUT THE EXPRESS WRITTEN CONSENT OF V.W.T. V.W.T. ASSUMES NO RESPONSIBILITY OR LIABILITY FOR THE USE OF THIS DOCUMENT OR THE DESIGN CONCEPTS AND INFORMATION CONTAINED HEREIN FOR ANOTHER PROJECT, OR IN A MANNER THAT DOES NOT RELATE TO THE FITNESS OR PURPOSE OF THIS DOCUMENT. IN NO EVENT SHALL THIS DOCUMENT OR THE DESIGN CONCEPTS AND INFORMATION CONTAINED HEREIN BE USED IN A MANNER DETRIMENTAL TO THE INTEREST OF V.W.T. ALL COPYRIGHT, PATENT AND OTHER INTELLECTUAL PROPERTY RIGHTS ARE RESERVED. ACCEPTANCE OF THE DELIVERY OF THIS DOCUMENT CONSTITUTES AGREEMENT TO THESE TERMS AND CONDITIONS.

| DESIGNER | DATE |
|---|---|
| - | - |
| CHECKER | DATE |
| - | - |
| ENGINEER | DATE |
| - | - |
| SCALE: N/A | |

TITLE: JB-004
CONTROL JUNCTION BOX
FIELD WIRING

CLIENT: WWTP UPGRADE
CITY OF IQALUIT

VEOLIA

VEOLIA WATER TECHNOLOGIES CANADA INC. 4105 Sartelon, Saint-Laurent, Qc, Canada. Tel: (514) 334-7230

| PROJECT | DRAWING | INTERNAL | SHEET | REV |
|---|---|---|---|---|
| 5000218036-EID | 0005-AU-VWT | - | 01 OF 02 | 3 |

BAR = 1" AT PLOT SCALE
REF: A6798B
STD: "B" 11x17

Mar 26, 2019 11:15:31 - G:\Projets A67XX\A6798A @ A6798B - VEOLIA - 5000218036 Iqaluit WWTP Upgrade\DOC\DESSIN\000-DRAWINGS\JB-004\REV 3
AS BUILT\5000218036-EID-0005-AU-VWT-001.dwg - zhu

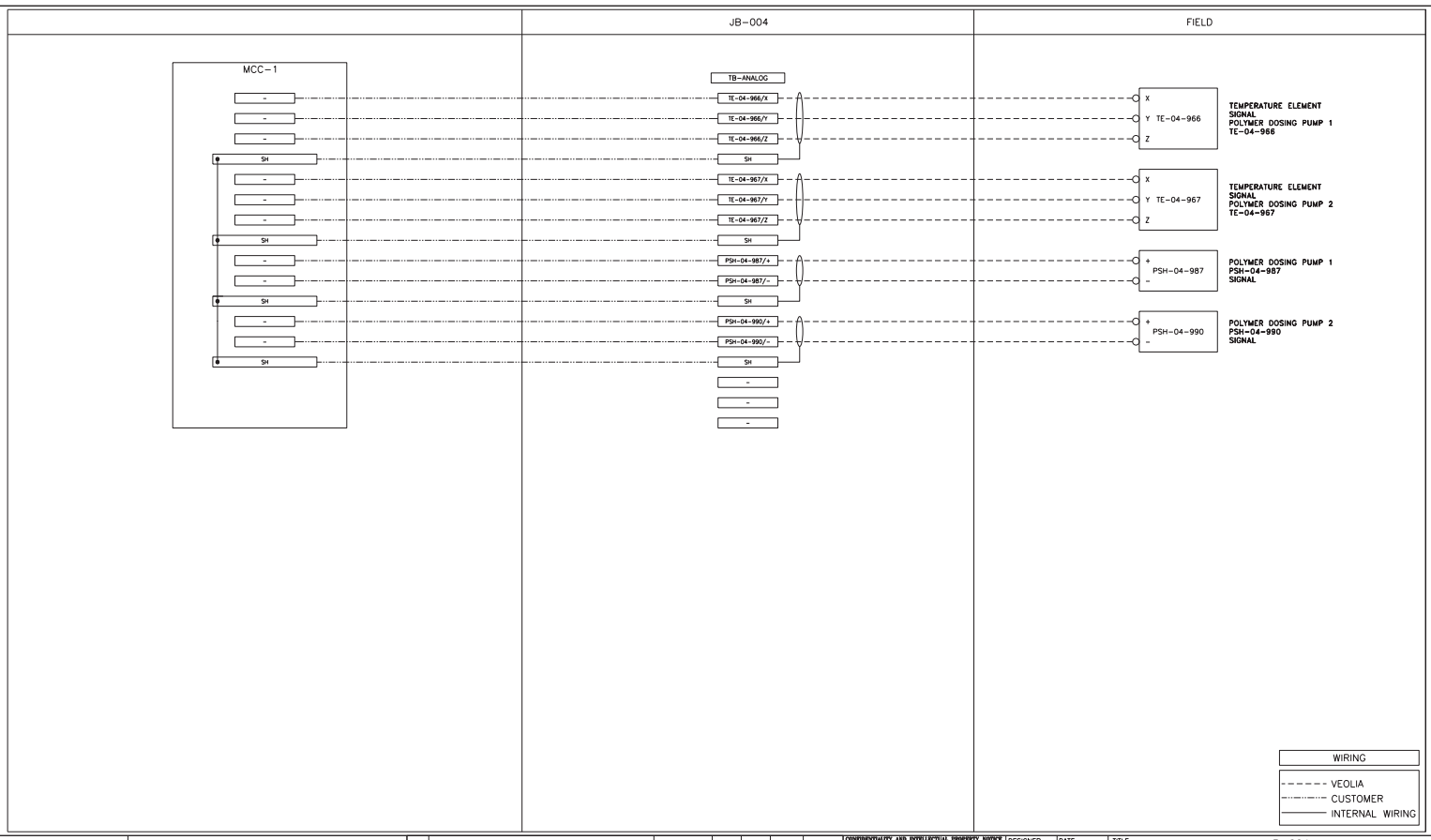


| REV | DESCRIPTION | DATE | REVD | CHKD | APVD | ECN |
|---|---|---|---|---|---|---|
| 3 | AS BUILT | 2019-03-26 | HZ | RA | - | - |
| 2 | FOR FABRICATION | 2019-03-15 | MR | RA | - | - |
| 1 | FOR APPROVAL | 2019-02-07 | HZ | RA | - | - |


CONFIDENTIALITY AND INTELLECTUAL PROPERTY NOTICE
ALL INFORMATION CONTAINED IN THIS DOCUMENT IS THE SOLE PROPERTY OF VEOLIA WATER TECHNOLOGIES CANADA INC. AND IS PROTECTED BY ALL APPLICABLE LAWS, INCLUDING BUT NOT LIMITED TO COPYRIGHT AND OTHER INTELLECTUAL PROPERTY LAWS. THE DESIGN CONCEPTS AND INFORMATION CONTAINED HEREIN ARE PROPRIETARY TO V.W.T. AND ARE SUBMITTED IN CONFIDENCE. THEY ARE NOT TRANSFERABLE. THEY MUST BE USED ONLY FOR THE PURPOSE FOR WHICH THE DOCUMENT IS EXPRESSLY SUBMITTED AND NO IMPLICIT LICENCE IS GRANTED OTHERWISE BY THE SUBMISSION OF THIS DOCUMENT. THEY ARE CONFIDENTIAL AND PRIVILEGED INFORMATION OF V.W.T. AND THEY MUST NOT BE DISCLOSED, REPRODUCED, LOANED, REMITTED OR USED IN ANY OTHER MANNER WITHOUT THE EXPRESS WRITTEN CONSENT OF V.W.T. V.W.T. ASSUMES NO RESPONSIBILITY OR LIABILITY FOR THE USE OF THIS DOCUMENT OR THE DESIGN CONCEPTS AND INFORMATION CONTAINED HEREIN FOR ANOTHER PROJECT, OR IN A MANNER THAT DOES NOT RELATE TO THE FITNESS OR PURPOSE OF THIS DOCUMENT. IN NO EVENT SHALL THIS DOCUMENT OR THE DESIGN CONCEPTS AND INFORMATION CONTAINED HEREIN BE USED IN A MANNER DETRIMENTAL TO THE INTEREST OF V.W.T. ALL COPYRIGHT, PATENT AND OTHER INTELLECTUAL PROPERTY RIGHTS ARE RESERVED. ACCEPTANCE OF THE DELIVERY OF THIS DOCUMENT CONSTITUTES AGREEMENT TO THESE TERMS AND CONDITIONS.


| | |
|---|---|
| DESIGNER | DATE |
| - | - |
| CHECKER | DATE |
| - | - |
| ENGINEER | DATE |
| - | - |
| SCALE: N/A | |

TITLE: JB-004 CONTROL JUNCTION BOX FIELD WIRING

CLIENT: WWTP UPGRADE CITY OF IQALUIT

VEOLIA


VEOLIA WATER TECHNOLOGIES CANADA INC. 4105 Sartelon, Saint-Laurent, Qc, Canada. Tel: (514) 334-7230


| PROJECT | DRAWING | INTERNAL | SHEET | REV |
|---|---|---|---|---|
| 5000218036-EID | 0005-AU-VWT | - | 02 OF 02 | 3 |


Mar 26, 2019 11:15:33 - G:\Projets A67XX\A6798A @ A6798B - VEOLIA - 5000218036 Iqaluit WWTP Upgrade\DOC\DESSIN\000-DRAWINGS\JB-004\REV 3
AS BUILT\5000218036-EID-0005-AU-VWT-002.dwg - zhu
BAR = 1" AT PLOT SCALE
REF: A6798B
STD: "B" 11x17

**Date: Dec 06, 2018**

REVIEWED BY CONTRACTOR
Kudlik Construction Ltd.
NAME: Sandra Rousseau P.Eng
DATE: Déc 06, 2018

# Transmittal

**Arctic Electrical Nunavut Ltd**
PO Box 1381
Iqaluit, Nu.
X0A 0H0
Phone: 867-975-3494
**From: Lee Pitcher**

**Project** **Waste Wate Treatment Plant**
**Location** Iqaluit NU
**To** Kudlik Construction
Contact: Sandra Rousseau P.Eng.
srousseau@kudlik.biz



SE-12R1 - SU-ELE-012R1
PO-Nedco

Attached are the following items:

- [x] Drawings
- [ ] Prints
- [ ] Plans
- [x] Specifications
- [ ] Information
- [ ] Submittals

Other:

THESE ARE TRANSMITTED FOR:

- [ ] Prior Approval
- [ ] Approval
- [ ] Approval as Submitted
- [ ] Approval as Noted
- [x] Resubmittal for Approval
- [ ] Corrections
- [ ] Your Use
- [ ] Review and Comment
- [ ] Record

Bids due on:
Other:

| Qty | Type | MFG | Part |
|---|---|---|---|

26 24 17 Panelboards-Panel 4A CCN-014

STANTEC PROJECT #: 110126045
SUBMITTAL # ELE-012R1

This review by Stantec is for general conformance with the design concept of Stantec's design of the:

- [ ] Architectural
- [ ] Structural
- [ ] Mechanical
- [x] Electrical
- [ ] Other

component(s) only and does not mean that Stantec has verified or approves the shop drawing(s). The Contractor remains solely responsible for the shop drawing(s) and this review by Stantec does not relieve the Contractor of the Contractor's responsibility for errors or omissions in the shop drawing(s) or for meeting all requirements of the contract documents. This review does not mean that Stantec approves the detailed design inherent in the shop drawing, responsibility for which shall remain with the Contractor submitting same, nor does this review mean that Stantec accepts any deviation of the shop drawing(s) from the contract documents. The Contractor is responsible for confirming all dimensions and correlating them at the job site, for all construction means, methods and techniques, and for coordination of construction work of all trades, including coordination of all shop drawings.

Stantec

- [ ] REVIEWED
- [x] REVIEWED, AS NOTED
- [ ] REVISE AND RESUBMIT
- [ ] NOT REVIEWED

DATE 2018-12-06
BY Konrad Goluch

Bus to be copper. Min S.C Rating to be 14k A.I.C. Fully rated

**Notes:**
Please review the attached approval drawings carefully. Production cannot be scheduled until a signed copy of the final approved drawing are received. Be aware that once drawings are approved, any errors due to incorrect information are the responsibility of the client.

Do not hesitate to contact me if you have any questions or concerns.

# Product data sheet
## Characteristics

# NF442L2
## NF Pnlbrd Interior 250A, 3 PH, 4 Wire, 42 CCT, Mn Lug, Al

Product availability : Stock - Normally stocked in distribution facility

Price* : 2418.00 USD



## Main

| | |
|---|---|
| Load center type | Main lugs |
| Circuit breaker type | EDB/EDG/EDJ |
| Material | Aluminium |

## Complementary

| | |
|---|---|
| Number of spaces | 42 |
| Enclosure nominal height | 56 in<br>44 in |
| Enclosure nominal width | 20 in |
| Enclosure nominal depth | 5.75 inFor NEMA 1 enclosure<br>6.5 inFor NEMA 3R/5/12 enclosure |
| Line Rated Current | 250 A |
| Wiring configuration | 4-wire |
| Phase | 3 phases |
| System Voltage | 480Y/277 V AC |

## Environment

| | |
|---|---|
| Standards | CSA C22.2<br>UL 67 |

## Ordering and shipping details

| | |
|---|---|
| Category | 08350 - NF MLO INTERIOR RTA |
| Discount Schedule | PE1A |
| GTIN | 00785901871569 |
| Nbr. of units in pkg. | 1 |
| Package weight(Lbs) | 43.300000000000004 |

Disclaimer: This documentation is not intended as a substitute for and is not to be used for determining suitability or reliability of these products for specific user applications

| | |
|---|---|
| Returnability | Y |
| Country of origin | MX |

## Offer Sustainability

| | |
|---|---|
| RoHS (date code: YYWW) | Compliant - since 1419 - Schneider Electric declaration of conformity<br>Schneider Electric declaration of conformity |
| Product environmental profile | Available |
| Product end of life instructions | Need no specific recycling operations |
| California proposition 65 | WARNING: This product can expose you to chemicals including: |
| - - - - - - - Substance 1 | Nickel compounds which is known to the State of California to cause cancer and |
| - - - - - - - Substance 2 | Bisphenol A (BPA) which is known to the State of California to cause birth defects or other reproductive harm. |
| - - - - - - - More information | For more information go to www.p65warnings.ca.gov |

## Contractual warranty

| | |
|---|---|
| Warranty period | 18 months |

| REV | DESCRIPTION | BY | DATE | – | ---- | -- | --/--/-- |
|---|---|---|---|---|---|---|---|
| – | ---- | -- | --/--/-- | – | ---- | -- | --/--/-- |

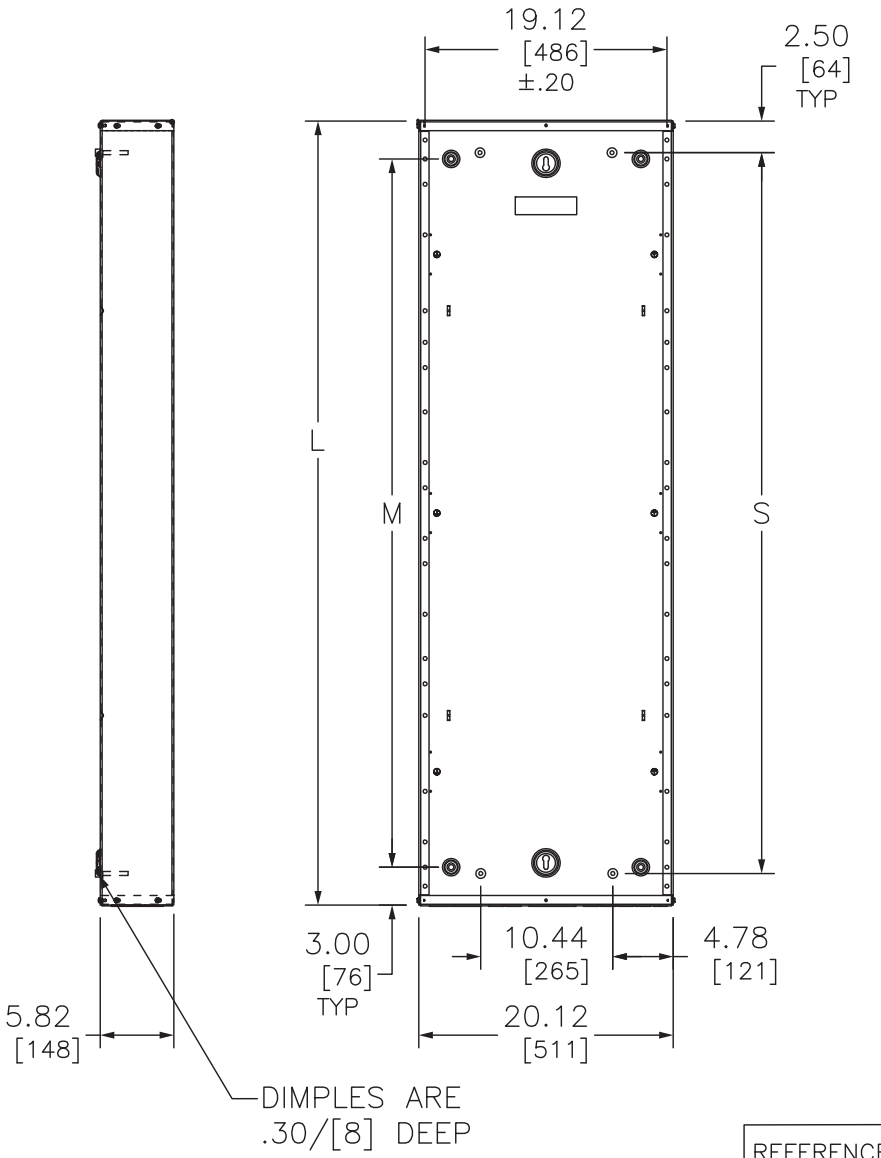


| KNOCKOUTS | | | | |
|---|---|---|---|---|
| SYMBOL | CONDUIT SIZE | | KNOCKOUT DIA | |
| | IN | MM | IN | MM |
| A | .50 | 13 | .88 | 22 |
| B | .75 | 19 | 1.12 | 28 |
| D | 1.25 | 32 | 1.75 | 44 |
| E | 1.50 | 38 | 2.00 | 51 |
| F | 2.00 | 51 | 2.50 | 64 |
| G | 2.50 | 64 | 3.00 | 76 |
| H | 3.00 | 76 | 3.62 | 92 |
| I | 3.50 | 89 | 4.12 | 105 |

*Enclosure*

DUAL DIMENSIONS: INCHES
MILLIMETERS

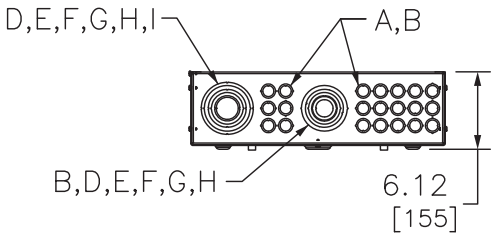


| REFERENCE CATALOG NO | L | | S | | M | |
|---|---|---|---|---|---|---|
| | IN | MM | IN | MM | IN | MM |
| MH26 | 26.00 | 660 | 21.00 | 533 | 20.00 | 508 |
| MH32 | 32.00 | 813 | 27.00 | 686 | 26.00 | 660 |
| MH38 | 38.00 | 965 | 33.00 | 838 | 32.00 | 813 |
| MH44 | 44.00 | 1118 | 39.00 | 991 | 38.00 | 965 |
| MH50 | 50.00 | 1270 | 45.00 | 1143 | 44.00 | 1118 |
| MH56 | 56.00 | 1422 | 51.00 | 1295 | 50.00 | 1270 |
| MH62 | 62.00 | 1575 | 57.00 | 1448 | 56.00 | 1422 |
| MH68 | 68.00 | 1727 | 63.00 | 1600 | 62.00 | 1575 |
| MH74 | 74.00 | 1880 | 69.00 | 1753 | 68.00 | 1727 |
| MH80 | 80.00 | 2032 | 75.00 | 1905 | 74.00 | 1880 |
| MH86 | 86.00 | 2184 | 81.00 | 2057 | 80.00 | 2032 |
| MH92 | 92.00 | 2337 | 87.00 | 2210 | 86.00 | 2184 |

| | | | |
|---|---|---|---|
| JOB NAME: | --- | EQUIPMENT DESIGNATION: | --- |
| JOB LOCATION: | --- | EQUIPMENT TYPE: | NEMA 1 BOXES |
| DRAWN BY: | --- | DRAWING TYPE: | --- |
| ENGR: | --- | | |
| DATE: | JULY 2018 | | |
| DRAWING STATUS: | --- | DWG# PBA600 | PG 1 OF 1 REV – |

| CATALOG NUMBER | A | | B | | C | |
|---|---|---|---|---|---|---|
| | IN | MM | IN | MM | IN | MM |
| NC26S | 26.12 | 663 | 17.70 | 436 | 6.16 | 156 |
| NC32S | 32.12 | 816 | 23.70 | 602 | 9.16 | 233 |
| NC38S | 38.12 | 968 | 29.70 | 754 | 12.16 | 309 |
| NC44S | 44.12 | 1121 | 35.70 | 907 | 15.16 | 385 |
| NC50S | 50.12 | 1273 | 41.70 | 1059 | 18.16 | 461 |
| NC56S | 56.12 | 1425 | 47.70 | 1212 | 21.16 | 537 |
| NC62S | 62.12 | 1578 | 53.70 | 1364 | 24.16 | 614 |
| NC68S | 68.12 | 1730 | 59.70 | 1516 | 27.16 | 690 |
| NC74S | 74.12 | 1883 | 65.70 | 1669 | 30.16 | 766 |
| NC80S | 80.12 | 2035 | 71.70 | 1821 | 33.16 | 842 |
| NC26F | 27.52 | 699 | 17.70 | 436 | 6.16 | 156 |
| NC32F | 33.52 | 851 | 23.70 | 602 | 9.16 | 233 |
| NC38F | 39.52 | 1004 | 29.70 | 754 | 12.16 | 309 |
| NC44F | 45.52 | 1156 | 35.70 | 907 | 15.16 | 385 |
| NC50F | 51.52 | 1309 | 41.70 | 1059 | 18.16 | 461 |
| NC56F | 57.52 | 1461 | 47.70 | 1212 | 21.16 | 537 |
| NC62F | 63.52 | 1613 | 53.70 | 1364 | 24.16 | 614 |
| NC68F | 69.52 | 1766 | 59.70 | 1516 | 27.16 | 690 |
| NC74F | 75.52 | 1918 | 65.70 | 1669 | 30.16 | 766 |
| NC80F | 81.52 | 2071 | 71.70 | 1821 | 33.16 | 842 |
| NC86S | 86.12 | 2187 | 77.70 | 1974 | 36.16 | 918 |
| NC86F | 87.52 | 2071 | 77.70 | 1974 | 36.16 | 918 |
| NC35S | 35.12 | 892 | 26.70 | 678 | 10.66 | 271 |
| NC35F | 36.52 | 928 | 26.70 | 678 | 10.66 | 271 |
| NC41S | 41.12 | 1044 | 32.70 | 831 | 13.66 | 347 |
| NC41F | 42.52 | 1080 | 32.70 | 831 | 13.66 | 347 |
| NC92S | 92.12 | 2340 | 83.70 | 2126 | 39.16 | 995 |

*Surface Trim*

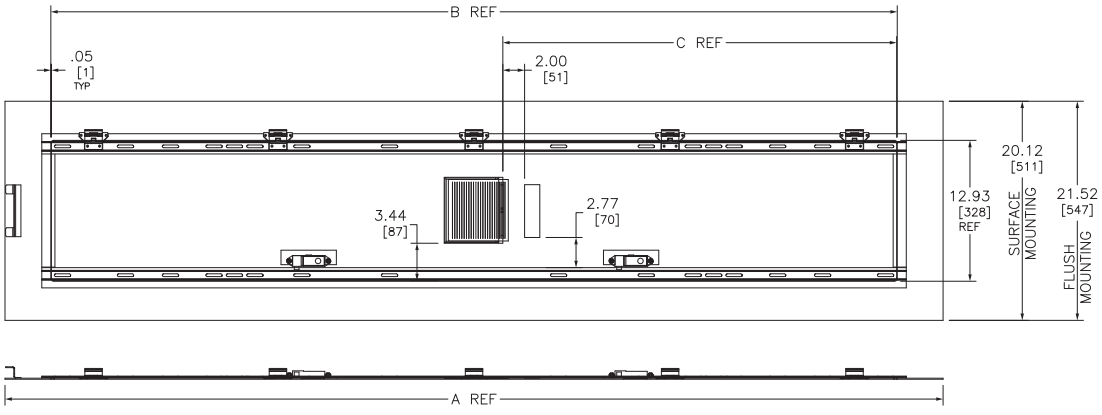


DUAL DIMENSIONS: INCHES / MILLIMETERS

PANELBOARD COVER
TRIM TYPE 1
SURFACE/FLUSH

SQUARE D by Schneider Electric

DWG# NO. PWFDS-SYTI-0164

# Product data sheet
## Characteristics

# EDB14015
## E-Frame Brkr 15A, 1P, 277V, 18/25kA, Bolt-on Mnt



## Main

| | |
|---|---|
| Range of product | 125 A Frame EDB-EGB-EJB |
| Product or component type | Miniature circuit-breaker |
| Device short name | EDB |
| Module type | E-Frame |
| Trip unit rating | 875 A |

## Complementary

| | |
|---|---|
| Line Rated Current | 15 A |
| System Voltage | 277 V AC |
| AWG gauge | AWG 14...AWG 6 copper<br>AWG 12...AWG 6 aluminium |
| Breaking capacity | 18 kA 277 V AC<br>18 kA 240 V AC<br>25 kA 120 V AC<br>18 kA 120/240 V AC |
| Circuit breaker application | HACR rated<br>Switching Duty rated<br>HID rated |
| Depth | 4.05 in |
| Electrical connection | Lugs aluminium |
| Height | 5.66 in |
| Holding current | 270 A |
| Local signalling | Trip indicator |
| Mounting mode | Bolt-on |
| Number of poles | 1 |
| Number of spaces | 1 |
| Number of spaces required | 1 |
| Product destination | Panelboard NF |
| Product weight | 2 lb(US) |

Disclaimer: This documentation is not intended as a substitute for and is not to be used for determining suitability or reliability of these products for specific user applications

| | |
|---|---|
| Protection type | Short-circuit<br>Overload |
| Width | 0.98 in |
| Trip unit technology | Thermal-magnetic |
| Breaking capacity code | D |

## Environment

| | |
|---|---|
| Product certifications | CULus<br>IEC |
| Ambient air temperature for operation | 104 °F (40 °C) |

## Offer Sustainability

| | |
|---|---|
| Sustainable offer status | Green Premium product |
| RoHS (date code: YYWW) | Compliant - since 1423 - Schneider Electric declaration of conformity<br>Schneider Electric declaration of conformity |
| REACh | Reference not containing SVHC above the threshold<br>Reference not containing SVHC above the threshold |
| Product environmental profile | Available |
| Product end of life instructions | Need no specific recycling operations |

# Product data sheet
## Characteristics

# EDB14010
## E-5raF e Brmr 10k A1PA4, 027V88/ Al , 7Vnmk ABoM4 oRg Rt



## g aiR

| | |
|---|---|
| f aRpe oGJroduct | l Vn k 5raF e EDB-Ey B-EbB |
| Product or coF JoReRt tvJe | g iRiature circuit-Treamer |
| DeLice short RaF e | EDB |
| g oduM4 tvJe | E-5raF e |
| SriJ uRt ratiRp | , 8n k |

## CoF JM4F eRtarv

| | |
|---|---|
| WiRe f ated CurreRt | 10 k |
| . vsteF / oM4ape | 4, 027V88 / kC |
| k6 y paupe | k6 y l 4HHHk6 y wcoJJer<br>k6 y l VHHHk6 y waM4F iRuF |
| BreamiRp caJacitv | l , mk V88 / kC<br>l , mk 4, 027V88 / kC<br>Vn mk l V0 / kC<br>Vn mk l V07V40 / kC<br>Vn mk V40 / kC |
| Circuit Treamer aJJM4catioR | l kCf rated<br>l ND rated |
| DeJth | 4H0n iR |
| EM4ectricaMcoRRectioR | Wups aM4F iRuF |
| l eipht | nHwiR |
| l oM4iRp curreRt | V80 k |
| WocaMsipRaM4Rp | SriJ iRdicator |
| g ouRtiRp F ode | BoM4oR |
| quF Ter oGJoM4s | 1 |
| quF Ter oGsJaces | 1 |
| quF Ter oGsJaces re( uired | 1 |
| Product destiRatioR | PaReM4oard q5 |
| Product Ueipht | 4 M4)O. 9 |

DiscM4F er3Shis docuF eRtatioR is Rot iReRded as a suTstitute Gor aRi is Rot to Te used Gor deterF iRRp suitaTiM4v or reM4iaTiM4v oGthese Jroducts Gor sJeciGc user aJJM4catioRs

| | |
|---|---|
| ProtectioR tvJe | . hort-circuit<br>° LerMad |
| 6 idth | VH:I4 iR |
| SriJ uRit techRoMpv | SherF aMF apRetic |
| BreamiRp caJacitv code | D |

## ERLiroRF eRt

| | |
|---|---|
| Product certiGcatioRs | COWus |
| k F TieRt air teF Jerature Gor oJeratioR | I 04 Y5 )40 YC9 |

## ° GGer . ustaiRaTiMtv

| | |
|---|---|
| . ustaiRaTMa oGer status | y reeR PreF iuF Jroduct |
| f oI . )date code3226 6 9 | CoF JMaRt - siRce I 4V1 - . chReider EMctric decMratioR oGcoRGorF itv<br>. chReider EMctric decMratioR oGcoRGorF itv |
| f Ek Ch | f eGereRce Rot coRtaiRiRp . / I C aToLe the thresholM<br>f eGereRce Rot coRtaiRiRp . / I C aToLe the thresholM |
| Product eRLiroRF eRtaMJroGMa | k LaiMaTMa |
| Product eRd oGMe iRstructioRs | q eed Ro sJeciGc recvcMRp oJeratioRs |


Life Is On Schneider Electric

**Date: July 11, 2018**

REVIEWED BY CONTRACTOR
Kudlik Construction Ltd.
NAME: Sandra Rousseau P.Eng
DATE: Jul 11, 2018

# Transmittal

**Arctic Electrical Nunavut Ltd**
PO Box 1381
Iqaluit, Nu.
X0A 0H0
Phone: 867-975-3494
**From: Lee Pitcher**

**Project** **Waste Wate Treatment Plant**
**Location** Iqaluit NU
**To** Kudlik Construction
Contact: Sandra Rousseau P.Eng.
srousseau@kudlik.biz



SE-01R2
PO-P18-123

Attached are the following items:

- [x] Drawings
- [ ] Prints
- [ ] Plans
- [x] Specifications
- [ ] Information
- [ ] Submittals

Other:

THESE ARE TRANSMITTED FOR:

- [ ] Prior Approval
- [ ] Approval
- [ ] Approval as Submitted
- [ ] Approval as Noted
- [x] Resubmittal for Approval
- [ ] Corrections
- [ ] Your Use
- [ ] Review and Comment
- [ ] Record

Bids due on:
Other:

| Qty | Type | MFG | Part |
|---|---|---|---|

Section 28 16 05 Intrusion Detection

STANTEC PROJECT #: 110126045

SUBMITTAL # ELE-001-R2

This review by Stantec is for general conformance with the design concept of Stantec's design of the:

- [ ] Architectural
- [ ] Structural
- [ ] Mechanical
- [x] Electrical
- [ ] Other

component(s) only and does not mean that Stantec has verified or approves the shop drawing(s). The Contractor remains solely responsible for the shop drawing(s) and this review by Stantec does not relieve the Contractor of the Contractor's responsibility for errors or omissions in the shop drawing(s) or for meeting all requirements of the contract documents. This review does not mean that Stantec approves the detailed design inherent in the shop drawing, responsibility for which shall remain with the Contractor submitting same, nor does this review mean that Stantec accepts any deviation of the shop drawing(s) from the contract documents. The Contractor is responsible for confirming all dimensions and correlating them at the job site, for all construction means, methods and techniques, and for coordination of construction work of all trades, including coordination of all shop drawings.

Stantec

- [x] REVIEWED
- [ ] REVIEWED, AS NOTED
- [ ] REVISE AND RESUBMIT
- [ ] NOT REVIEWED

DATE 2018-07-16

BY Konrad Goluch

**Notes:**
Please review the attached approval drawings carefully. Production cannot be scheduled until a signed copy of the final approved drawing are received. Be aware that once drawings are approved, any errors due to incorrect information are the responsibility of the contractor.

Do not hesitate to contact me if you have any questions or concerns.

# B208 Octo-input Module

www.boschsecurity.com

28 16 05

BOSCH
Invented for life

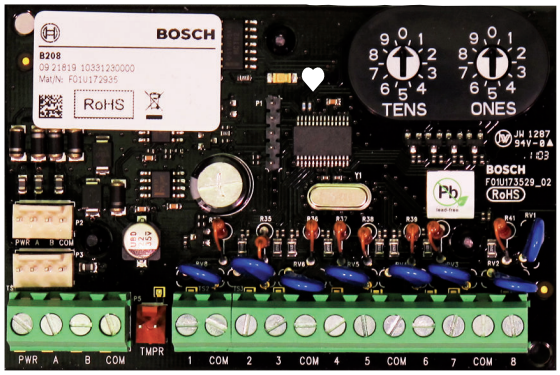


- Programmable input point functions
- Easy to read switch addressing
- 2 interconnect wiring connectors
- Provides eight points

The B208 Octo-input Module is an 8 point expansion device that connects to the control panel through the SDI2 bus. This module is fully supervised and communicates back to the control panel all point status changes. The module expansion points operate the same as the points on the control panel. Industrial, commercial, and institutional facilities are typical installations for the B208 module. The B208 connects to the SDI2 bus on the control panel using SDI2 terminals, or using the interconnect cable. You can connect multiple B208 modules to a single control panel. The B208 address switches allow for ease of use in device addressing.

## System overview

The B208 Octo-input Module connects to a control panel through the SDI2 bus. This module is supervised and communicates back to the control panel all point status changes. The module's expansion points operate the same as the points on the control panel.

## Functions

**Loop inputs**
The B208 uses up to eight inputs which may be Normally Open (NO), or Normally Closed (NC) with 1k Ω EOL resistor(s) for supervision.

## Certifications and approvals

| Region | Certification | |
|---|---|---|
| Australia | RCM | ACMA |
| Europe | CE | EMC, RoHS |
| USA | UL | |
| | UL | UL 365 - Police Station Connected Burglar Alarm Units |
| | UL | UL 609 - Standard for Local Burglar Alarm Units and Systems |
| | UL | UL 636 - Holdup Alarm Units and Systems |
| | UL | UL 864 - Standard for Control Units and Accessories for Fire Alarm Systems |
| | UL | UL 985 - Household Fire Warning System Units |
| | UL | UL 1023 - Household Burglar Alarm System Units |
| | UL | UL 1076 - Proprietary Burglar Alarm Units and Systems |
| | UL | UL 1610 - Central Station Burglar Alarm Units |
| | FM | FM 3010 - Fire Alarm Signaling Systems |
| | CSFM | see our website |

28 16 05

| Region | Certification | |
|---|---|---|
| | FCC | Part 15 Class B |
| | FDNY-CoA | 6174 |
| | FDNY-CoA | 6196 |
| Canada | ULC | CAN/ULC S303 - Local Burglar Alarm Units and Systems |
| | ULC | CAN/ULC S304 - Standard for Signal Receiving Center and Premise Burglar Alarm |
| | ULC | ULC-ORD C1023 - Household Burglar Alarm System Units |
| | ULC | ULC-ORD C1076 - Proprietary Burglar Alarm Units and Systems |
| | IC | ICES-003 - Information Technology Equipment (ITE) |

## Installation/configuration notes

### Wiring considerations

The module to the control panel using the PWR, A, B, COM terminals on the control panel using the screw terminal strip or the interconnect wiring connector. Use 12 AWG to 22 AWG (1.5 mm to 0.6 mm) wires from the module to the control panel.

### Compatibility

For UL 864 compliance, use a UL commercial fire approved control panel.

| | |
|---|---|
| Control panels | B9512G/B9512G-E (Up to 59 modules)<br>B8512G/B8512G-E (Up to 9 modules)<br>B6512 (Up to 9 modules)<br>B5512/B5512E (Up to 4 modules)<br>B4512/B4512E (Up to 2 modules)<br>D9412GV4 (Up to 24 modules)<br>D7412GV4 (Up to 7 modules)<br>D7212GV4 (Up to 3 modules) |

## Parts included

| Quantity | Component |
|---|---|
| 1 | Module |
| 1 | Hardware pack |
| 1 | Interconnect cable |
| 1 | Installation manual |

## Technical specifications

### Properties

| | |
|---|---|
| Dimensions | 2.5 in x 3.8 in x 0.60 in<br>(6.37 cm x 9.6 cm x 1.5 cm) |

### Environmental considerations

| | |
|---|---|
| Relative humidity | 5% to 93% at +32°C (+90°F) |
| Temperature (operating) | 0°C to +49°C (+32°F to +120°F) |

### Power requirements

| | |
|---|---|
| Current | 35 mA |
| Voltage | 12 VDC nominal |

### Wiring

| | |
|---|---|
| SDI2 wiring | Maximum distance – Wire size (unshielded wire only): 1000 ft (305 m) – 22 AWG (0.65 mm)<br>1000 ft (305 m) – 18 AWG (1.02 mm)<br>Unshielded wire only |

### Loop inputs

| | |
|---|---|
| Loop Inputs | Up to eight inputs. Input contacts may be Normally Open (NO) or Normally Closed (NC) with 1kΩ EOL resistor(s) for supervision. Note: Normally Closed (NC) is not permitted in Fire installations. |

## Ordering information

**B208 Octo-input Module**
Provides 8 programmable inputs.
Order number **B208**

28 16 05

**Represented by:**

**Europe, Middle East, Africa:**
Bosch Security Systems B.V.
P.O. Box 80002
5600 JB Eindhoven, The Netherlands
Phone: + 31 40 2577 284
emea.securitysystems@bosch.com
emea.boschsecurity.com

**Germany:**
Bosch Sicherheitssysteme GmbH
Robert-Bosch-Ring 5
85630 Grasbrunn
Germany
www.boschsecurity.com

**North America:**
Bosch Security Systems, Inc.
130 Perinton Parkway
Fairport, New York, 14450, USA
Phone: +1 800 289 0096
Fax: +1 585 223 9180
onlinehelp@us.bosch.com
www.boschsecurity.us

**Asia-Pacific:**
Robert Bosch (SEA) Pte Ltd, Security Systems
11 Bishan Street 21
Singapore 573943
Phone: +65 6571 2808
Fax: +65 6571 2699
apr.securitysystems@bosch.com
www.boschsecurity.asia

© Bosch Security Systems 2017 | Data subject to change without notice
2536957579 | en, V25, 17. Feb 2017

# B430 Plug-in Telephone Communicator

www.boschsecurity.com

28 16 05

BOSCH
Invented for life

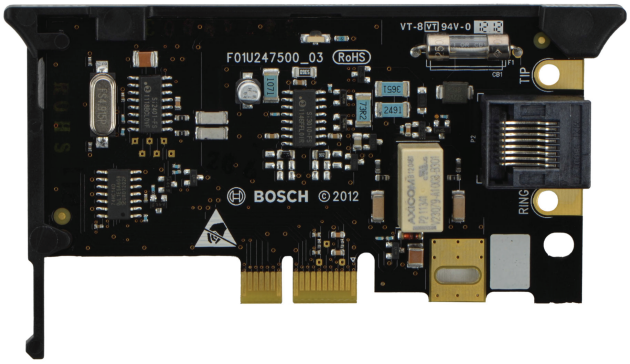


- Provides a single telephone line with RJ-45 connection for central station reporting and remote programming
- Easily configured for communications from Remote Programming Software (RPS) or a keypad, eliminating the need for separate configuration
- Easy two-step plug-in installation, troubleshooting, and maintenance

The B430 provides communication over the PSTN (Public Switched Telephone Network) by connecting the PSTN to the control panel. The module provides a single telephone jack, and easily installs into the control panel on-board plug-in module connector.

## Functions

**Central station reporting**
The B430 supports reporting to a central station receiver through the telephone lines.
**Remote programming of Bosch control panels**
The B430 supports secure RPS programming of compatible Bosch control panels.

## Certifications and approvals

| Region | FCC Details |
|---|---|
| USA | FCC Registration Number: ESVAL00BB430<br>Ringer Eq: 0.0B |

| Region | Certification | |
|---|---|---|
| Australia | RCM | ACMA |
| Europe | CE | EMC, RoHS |
| USA | UL | UL 365 - Police Station Connected Burglar Alarm Units |
| | UL | UL 636 - Holdup Alarm Units and Systems |
| | UL | UL 864 - Standard for Control Units and Accessories for Fire Alarm Systems |
| | UL | UL 985 - Household Fire Warning System Units |
| | UL | UL 1023 - Household Burglar Alarm System Units |
| | UL | UL 1076 - Proprietary Burglar Alarm Units and Systems |
| | UL | UL 1610 - Central Station Burglar Alarm Units |
| | CSFM | see our website |
| | FCC | Part 15 Class B |
| | FCC | Part 68 |
| | FDNY-CoA | 6174 |
| Canada | ULC | CAN/ULC S303 - Local Burglar Alarm Units and Systems |
| | ULC | CAN/ULC S304 - Standard for Signal Receiving Center and Premise Burglar Alarm |
| | ULC | CAN/ULC S545 - Residential Fire Warning System Control Units |

28 16 05

| Region | Certification | |
|---|---|---|
| | ULC | CAN/ULC S559 - Fire Signal Receiving Centres and Systems |
| | ULC | ULC-ORD C1023 - Household Burglar Alarm System Units |
| | ULC | ULC-ORD C1076 - Proprietary Burglar Alarm Units and Systems |
| | IC | ICES-003 - Information Technology Equipment (ITE) |
| Brazil | ANATEL | 1709-13-1855 [B430] |

## Installation/configuration notes

### Mounting considerations

Connect the B430 Plug-in Telephone Communicator to any compatible control panel or interface module, which can then be mounted in a variety of enclosures for optimal situations.

### Wiring considerations

The B430 connects to the control panel or interface modules without tools or physical wiring for power. It has an RJ-45 jack for plugging in the phone line (PSTN).

### Communication speed

The module communicates at 2400 baud maximum.

### Compatibility

| | |
|---|---|
| Control panels | B9512G/B9512G-E<br>B6512<br>B8512G/B8512G-E<br>B5512/B5512E<br>B4512/B4512E<br>B3512/B3512E |
| Phone cords | D161 Dual Modular Telephone Cord<br>D162 Modular Telephone Cord |
| Phone jack | D166 Telephone Jack |

## Parts included

| Quantity | Component |
|---|---|
| 1 | B430 Plug-in Telephone Communicator |
| 1 | Literature pack |

## Technical specifications

### Properties

| | |
|---|---|
| Dimensions | 2 in x 3.68 in x 0.60 in<br>(50 mm x 93.5 mm x 15.25 mm) |
| Weight | 1.3 pounds (0.6 KG) |

### Environmental considerations

| | |
|---|---|
| Relative humidity | 5% to 93% at +32°C (+90°F) |
| Temperature (operating) | 0°C to +49°C (+32°F to +120°F) |

### Power requirements

| | |
|---|---|
| Current (maximum) | Standby: 24 mA<br>Alarm: 24 mA |
| Voltage (operating) | 12 VDC nominal |

## Ordering information

**B430 Plug-in Telephone Communicator**
Plug-in PSTN communication module for control panel to central station receiver communication.
Order number **B430**

28 16 05

**Represented by:**

**Europe, Middle East, Africa:**
Bosch Security Systems B.V.
P.O. Box 80002
5600 JB Eindhoven, The Netherlands
Phone: + 31 40 2577 284
emea.securitysystems@bosch.com
emea.boschsecurity.com

**Germany:**
Bosch Sicherheitssysteme GmbH
Robert-Bosch-Ring 5
85630 Grasbrunn
Germany
www.boschsecurity.com

**North America:**
Bosch Security Systems, Inc.
130 Perinton Parkway
Fairport, New York, 14450, USA
Phone: +1 800 289 0096
Fax: +1 585 223 9180
onlinehelp@us.bosch.com
www.boschsecurity.us

**Asia-Pacific:**
Robert Bosch (SEA) Pte Ltd, Security Systems
11 Bishan Street 21
Singapore 573943
Phone: +65 6571 2808
Fax: +65 6571 2699
apr.securitysystems@bosch.com
www.boschsecurity.asia

© Bosch Security Systems 2017 | Data subject to change without notice
18964708491 | en, V8, 17. Feb 2017

# B920 Two-line Alphanumeric Keypad (SDI2)

www.boschsecurity.com

28 16 05

BOSCH
Invented for life




- 2-line LCD display with up to 32 character point, user, and area names
- Simple menu-style user interface with dedicated function buttons for common commands, including status indication
- Situation sensitive on-screen help makes system operation simple and easy
- Highly visible on (arm)/alarm, ready to turn on (arm), power and gas alarm indicators
- Simple installation with self-locking base and chassis design, plus built-in bubble level

The B920 Two-line Alphanumeric Keypad (SDI2) is a SDI2 bus compatible device. Each keypad has user adjustable options such as volume and display brightness. The B920 shows two-line system messages for all areas.

## System overview

- For commercial use, install the keypad in building entrances and areas with unrestricted access. Mounting a keypad near exterior doors in hotel or business lobbies allows people to identify the type and location of the emergency.
- For residential use, install the keypad near the front and rear entrances to the home. Install additional keypads in a kitchen or in a bedroom.
- Use multiple keypads in a large building with many separate areas of security. Program multiple keypads to control multiple areas.
- Audible tones from the keypad sounder alert personnel to fire events and assist fire fighters in locating the keypad.

## Functions

**LCD display**
The keypad uses words, numbers, and symbols to show the status of the security system. When several events occur, the keypad shows each event in order of priority.

**Keys**
Each keypad has 10 number keys, 7 function keys, and 6 navigation keys. When pressed, keys turn on keypad backlighting and emit the keypress tone (short beep). The function keys include programmable function keys and keys to initiate arming and bypassing with one keypress.

**Audible tones**
The keypad has a built-in speaker that produces several distinct warning tones. The tones are differentiated so that the user can recognize an event simply by hearing its associated tone. The keypad backlight illuminates when it emits an audible tone. Users can use a passcode to silence the tone.

28 16 05

**Status indicators**
The status indicators on the keypad provide a quick visual reference for system status.

| | |
|---|---|
| ✓ | The indicator lights when the system is ready to turn on (arm). |
| | The indicator lights when the system is on (armed). |
| ⚠ | The indicator lights when there is a trouble condition. |
| GAS | The indicator lights when dangerous gases are present including carbon monoxide (NFPA 720). |
| | The indicator lights when the system has power. |

## Certifications and approvals

| Region | Certification | |
|---|---|---|
| Australia | RCM | ACMA |
| Europe | CE | EMC, RoHS |
| USA | UL | |
| | UL | UL 365 - Police Station Connected Burglar Alarm Units |
| | UL | UL 609 - Standard for Local Burglar Alarm Units and Systems |
| | UL | UL 636 - Holdup Alarm Units and Systems |
| | UL | UL 985 - Household Fire Warning System Units |
| | UL | UL 1023 - Household Burglar Alarm System Units |
| | UL | UL 1076 - Proprietary Burglar Alarm Units and Systems |
| | UL | UL 1610 - Central Station Burglar Alarm Units |
| | CSFM | see our website |
| | FCC | Part 15 Class B |
| Canada | ULC | CAN/ULC S303 - Local Burglar Alarm Units and Systems |
| | ULC | CAN/ULC S304 - Standard for Signal Receiving Center and Premise Burglar Alarm |
| | ULC | CAN/ULC S545 - Residential Fire Warning System Control Units |
| | ULC | CAN/ULC S559 - Fire Signal Receiving Centres and Systems |
| | ULC | ULC-ORD C1023 - Household Burglar Alarm System Units |
| | ULC | ULC-ORD C1076 - Proprietary Burglar Alarm Units and Systems |
| | IC | ICES-003 - Information Technology Equipment (ITE) |

## Installation/configuration notes

**Mounting considerations**
Mount in indoor, dry locations.

**Power supply**
A compatible control panel supplies the power and data requirements to the keypad through a four-wire connection.

**Enclosure and wiring**
The sliding self-locking enclosure has an integrated bubble level and custom gap-free, lift-gate style terminal blocks to make installation easier.

**Compatible control panels**
B9512G/B9512G-E
B8512G/B8512G-E
B6512
B5512/B5512E firmware v2.02 and higher
B4512/B4512E firmware v2.02 and higher
B3512/B3512E firmware v2.02 and higher
D9412GV4/D7412GV4 firmware v2.02 and higher

## Parts included

| Quantity | Component |
|---|---|
| 1 | Keypad |
| 1 | Hardware pack |
| 1 | Set of ABC key labels |
| 1 | Installation Guide |
| 1 | User's Quick Reference Guide |

## Technical specifications

### Properties

| | |
|---|---|
| Dimensions | 6.2 in x 4.7 in x 1 in (158 mm x 120 mm x 26 mm) |
| Weight | 11.3 oz (0.32 kg) |
| Material | Acrylonitrile butadiene styrene (ABS)<br>Poly(methyl methacrylate) (PMMA) |
| Display window | 2 line display<br>18 characters per line |
| Indicators | Illuminated keys<br>Status indicators<br>Warning and indicating tones |

### Environmental considerations

| | |
|---|---|
| Relative humidity | 5% to 93% at +32°C (+90°F) non-condensing |
| Temperature (operating) | 0°C to +50°C (+32°F to +122°F) |

28 16 05

## Power requirements

| | |
|---|---|
| Current | Standby:35 mA<br>Alarm: 70 mA |
| Voltage (input) | 12 VDC nominal |

## Wiring

| | |
|---|---|
| Terminal wire size | 12 AWG to 22 AWG (2.0 mm to 0.65 mm) |
| SDI2 wiring | Maximum distance – wire size (unshielded wire only):<br>1000 ft (305 m) – 22 AWG (0.65 mm) |

## Ordering information

**B920 Two-line Alphanumeric Keypad (SDI2)**
Two-line alphanumeric keypad
Order number **B920**

## Accessories

**B56 Keypad Surface Mount Box**
Surface mount box for mounting a keypad to concrete or block.
Order number **B56**

**B96 Keypad Trim Bezel**
Cover the wall footprint of previous keypads when replacing them with the new, slim design of B Series keypads. The white trim bezel is 8.6 in x 6.3 in x 0.12 in (22 mm x 16 mm x 3 mm).
Order number **B96**

**Represented by:**

**Europe, Middle East, Africa:**
Bosch Security Systems B.V.
P.O. Box 80002
5600 JB Eindhoven, The Netherlands
Phone: + 31 40 2577 284
emea.securitysystems@bosch.com
emea.boschsecurity.com

**Germany:**
Bosch Sicherheitssysteme GmbH
Robert-Bosch-Ring 5
85630 Grasbrunn
Germany
www.boschsecurity.com

**North America:**
Bosch Security Systems, Inc.
130 Perinton Parkway
Fairport, New York, 14450, USA
Phone: +1 800 289 0096
Fax: +1 585 223 9180
onlinehelp@us.bosch.com
www.boschsecurity.us

**Asia-Pacific:**
Robert Bosch (SEA) Pte Ltd, Security Systems
11 Bishan Street 21
Singapore 573943
Phone: +65 6571 2808
Fax: +65 6571 2699
apr.securitysystems@bosch.com
www.boschsecurity.asia

© Bosch Security Systems 2017 | Data subject to change without notice
9973643275 | en, V16, 17. Feb 2017

# B8103 Enclosure

www.boschsecurity.com

28 16 05

BOSCH
Invented for life



- Easy-to-install standoff location for mounting supported modules
- Made with cold-rolled steel with a white semi-gloss finish
- Easy access locations for battery placement
- Optional tamper switch mounting location

The enclosure houses many control panels and modules by Bosch. It is compatible with an enclosure tamper switch and can hold up to two batteries. Use the enclosure for residential fire and burglary installations and commercial burglary applications that do not require attack resistance.

## Certifications and approvals

| Region | Certification | |
|---|---|---|
| USA | UL | UL 294 - Standard for Access Control Units and Systems |
| | UL | UL 365 - Police Station Connected Burglar Alarm Units |
| | UL | UL 609 - Standard for Local Burglar Alarm Units and Systems |
| | UL | UL 864 - Standard for Control Units and Accessories for Fire Alarm Systems |
| | UL | UL 985 - Household Fire Warning System Units |
| | UL | UL 1023 - Household Burglar Alarm System Units |
| | UL | UL 1610 - Central Station Burglar Alarm Units |
| | UL | UL 1635 - Standard for Digital Alarm Communicator System Units |
| | CSFM | see our website |
| | FDNY-CoA | 6196 |
| Canada | ULC | CAN/ULC S303 - Local Burglar Alarm Units and Systems |
| | ULC | CAN/ULC S304 - Standard for Signal Receiving Center and Premise Burglar Alarm |
| | ULC | ULC-ORD C1023 - Household Burglar Alarm System Units |

## Installation/configuration notes

**Compatible locksets**
D101 (Key #1358)
D101F (Key #203)

**Compatible tamper switches**
D110
ICP-EZTS

28 16 05

## Parts included

| Quantity | Component |
|---|---|
| 1 | Enclosure |
| 1 | Hardware pack |
| 1 | Literature pack |

## Technical specifications

| | |
|---|---|
| Dimensions | 41 cm x 41 cm x 9 cm<br>(16 in. x 16 in. x 3.5 in.) |
| Weight | 4.5 kg (10 lb) |
| Material | Cold-rolled steel |
| Color | White |

## Ordering information

**B8103 Enclosure**
White steel enclosure measuring 41 cm x 41 cm x 9 cm (16 in. x 16 in. x 3.5 in.).
Order number **B8103**

**Represented by:**

**Europe, Middle East, Africa:**
Bosch Security Systems B.V.
P.O. Box 80002
5600 JB Eindhoven, The Netherlands
Phone: + 31 40 2577 284
emea.securitysystems@bosch.com
emea.boschsecurity.com

**Germany:**
Bosch Sicherheitssysteme GmbH
Robert-Bosch-Ring 5
85630 Grasbrunn
Germany
www.boschsecurity.com

**North America:**
Bosch Security Systems, Inc.
130 Perinton Parkway
Fairport, New York, 14450, USA
Phone: +1 800 289 0096
Fax: +1 585 223 9180
onlinehelp@us.bosch.com
www.boschsecurity.us

**Asia-Pacific:**
Robert Bosch (SEA) Pte Ltd, Security Systems
11 Bishan Street 21
Singapore 573943
Phone: +65 6571 2808
Fax: +65 6571 2699
apr.securitysystems@bosch.com
www.boschsecurity.asia

© Bosch Security Systems 2017 | Data subject to change without notice
18395968139 | en, V11, 21. Mar 2017

# B8512G Control Panels

www.boschsecurity.com

28 16 05

BOSCH
Invented for life

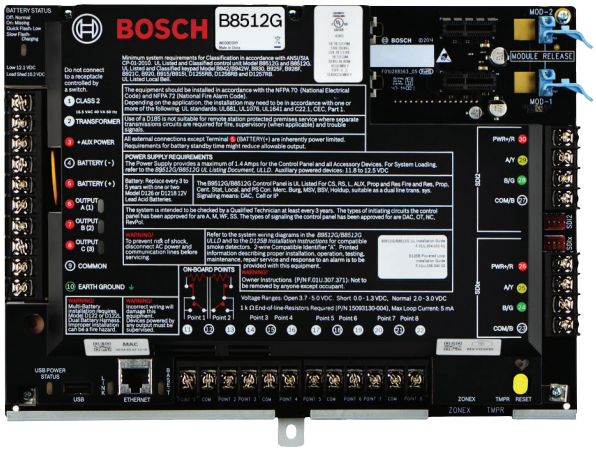


- Fully integrated intrusion, fire, and access control allows users to interface with one system instead of three
- Provides up to 99 points using a combination of hardwired or wireless devices for installation flexibility, and up to 8 areas and 8 doors for up to 500 users
- On-board Ethernet port for Conettix IP alarm communication and remote programming, compatible with modern IP networks including IPv6/IPv4, Auto-IP, and Universal Plug and Play
- Installer-friendly features for simple installation and communications, including on-board USB for easy on-site RPS programming, plus support for Remote Connect Service (not available in Europe, the Middle East, or Africa), and plug-in PSTN and cellular communication modules for simple installation and communications
- Remote Security Control (RSC) app which allows users to control their security systems – and view system cameras - remotely from mobile devices such as phones and tablets

The B9512G Control Panel and the B8512G Control Panel are the new premier commercial control panels from Bosch. B8512G control panels integrate intrusion, fire, and access control providing one simple user interface for all systems.
With the ability to adapt to large and small applications, the B8512G provides up to 99 individually identified points that can be split into 8 areas.
The control panel can communicate through its built-in Ethernet port (not applicable to “E” control panels), or through compatible plug-in modules that can send events over the public switched telephone network (PSTN) or over cellular network communications.

For users, programmable keypad shortcuts, situation sensitive on-screen help, and a bilingual user interface make system operation simple and easy.
With the B8512G, you can:

- Monitor alarm points for intruder, gas, or fire alarms.
- Program all system functions local or remote using Remote Programming Software (RPS) or by using basic programming through the keypad.
- Add up to 8 doors of access control using the optional B901 Access Control Module or D9210C Access Control Interface Module.

The B8512G is a direct replacement for previous control panel models D7412GV4, D7412GV3, D7412GV2, and D7412G.

28 16 05

## Functions

**Programmable outputs**
- Four alarm-output patterns
- Programmable bell test

**Point response**
- Selectable point response time
- Selectable EOL values and configuration
- Cross point capability
- Fire alarm verification
- Dangerous gas indicator includes carbon monoxide (NFPA 720)
- Watch mode
- Selectable point response time

**User interface**
- Supervision of up to 32 keypads
- Custom keypad text is fully programmable through RPS
- Full function menu including customizable shortcuts
- Authority by area and 32 character name for each user
- 14 custom authority levels to restrict system features that each user can access
- Programmable primary and secondary language by user and keypad; select from English, Spanish, French, and Portuguese

**Area configurations**
Link multiple areas to a shared area such as a lobby or common entryway. The shared area then automatically turns On (arms) when all associate areas are armed and turns Off (disarms) when any one associate area is disarmed. For higher security applications, the Area Re-Arm feature guarantees that areas are always rearmed, and are disarmed for no longer than a specific, configurable, amount of time (for example, service time).

**Custom functions**
For added convenience, the installer can program custom functions that allow customers to complete complex tasks with one simple action. For example, a custom function can bypass a group of points and arm the system, allowing the user to perform these functions with one easy command. Users can activate custom functions with a keypad, keyfob, token, or card, or the control panel can activate a function in reaction to a faulted point, or automatically through a scheduled event (SKED).

**Passcode security**
- Two-man rule. Requires two people with two unique passcodes to be present at the time of opening.
- Early ambush. Allows users to verify that the facility is safe by requiring two passcodes. The control panel sends a duress event if the user does not enter the passcode a second time after inspecting the premises.
- Dual authentication. Requires two forms of identification before processing certain system commands, including turning off the system and opening doors. A standard system user must have a passcode, a credential (token or card), and appropriate command authority permissions.

**Door control**
Using the B901 Access Control Module or D9210C Access Control Interface Module, the control panel provides a fully supervised access control solution. The solution offers 14 programmable levels of access authority. Authority for door access is controlled by the user level, the group of the user, the time of day, the door state, and the area armed (On/Off) state.

**Easy exit control**
The control panel changes from one On (armed) state to another without turning off (disarming) the system. For example, if you change the state from Part On (Perimeter Arm) to All On (Master Arm), the control panel complies and reports the change. Easy Exit Control reduces the number of keystrokes, simplifying system operation.

**Programmable passcode-controlled menu list**
Passcode-controlled shortcuts provide users only with the options and information pertinent to them, simplifying system operation.

**Flexible control**
The system provides the flexibility to choose added convenience or high security. For example, you can restrict to a keypad's immediate local area turning on (arming) and turning off (disarming) the system with a passcode, even if the user has access to other areas. This is particularly useful for high security areas, where a user may have access to the area, but would prefer to only turn off (disarm) the area individually rather than with the rest of the system.

**Monitor Delay/Delayed Response**
Create a special point index that delays the reaction of a point for a specified time (up to 1 hour in minutes and seconds). This delay provides time for the specified condition to reset before activating any annunciation. The system can annunciate locally and send a report, if desired. When the system is armed, the point can respond like a normal point – providing dual functionality. Use this feature to ensure that perimeter doors have not been propped open, or to monitor critical areas such as computer rooms and safes, for example.

**System users**
The system supports up to 500 users. Each user can have a personalized passcode, a wireless keyfob, and a credential to control the system. You can assign passcodes to one of 14 customized authority levels in each area that can be restricted to operate only during certain times. You can program a primary and secondary language for each user and by keypad (select from English, Spanish, French, and Portuguese). The keypad changes to the user's programmed language when the user enters his passcode or holds the Help key.

28 16 05

**Communication formats**
The control panel prioritizes and sends reports to four route groups. Network and phone communications can use one of two communication formats: Modem4, Contact ID. Each group has a programmable primary and backup destination.
The control panel provides flexible communications for most central stations with reporting capabilities such as:
- Individual point numbers
- Opening or closing reports by user and area number
- Remote programming attempts
- Diagnostic reports

**IP communication**
The control panel can use IP to communicate with a Conettix D6600 or a Conettix D6100IPv6 Communications Receiver/Gateway. Use one of the following for IP:
- The on-board Ethernet connection (the on-board Ethernet port is excluded on “E” versions).
- A B426.
- A plug-in cellular communicator (B440/B440-C/B441/B441-C/B442/B443/B444).

Conettix IP communication provides a secure path that includes anti-replay/anti-substitution features, and enhanced security with up to AES 256-bit encryption (using Cipher Block Chaining (CBC)).
The control panel supports Domain Name System (DNS) for both remote programming and central station communication. DNS provides ease of use, eliminating the need to use static IP addresses as your reporting destination, and accommodates a simple solution for central station disaster recovery. The control panel supports both IPv6 and IPv4 networks.

**Communication paths**
The control panel accommodates up to four separate phone and four separate network paths to the central station receiver. When resetting alarms or turning a system on and off, the user is identified by name and number.

**Personal notification**
The control panel can send text messages and emails for personal notification over Ethernet or using a cellular communicator. You can configure up to 32 destinations using a combination of cellular phone numbers and email addresses. The control panel sends notifications in the user’s programmed primary language.

**Bosch Remote Connect (Cloud)**
Remote Connect simplifies connections from RPS, and the Remote Security Control app, using Bosch Cloud services. This service creates a secure connection to the control panel without specific router settings or the need for a static IP address or DNS.

**Notice**
The Bosch Remote Connect service is not available in Europe, the Middle East, or Africa.

**Firmware updates**
The system allows remote firmware updates:
- Control panel updates. Remotely update the control panel firmware for easy feature enhancements without replacing ROM chips.
- Module update support. Remotely update the firmware on connected SDI2 modules for easy feature enhancements without visiting each individual module.

Firmware updates occur through Remote Programming Software (RPS) and the RPS Firmware Update Wizard. The Firmware Update Wizard uses the on-board USB connection or the on-board Ethernet (IP) connection (the on-board Ethernet port is excluded on “E” versions) to transfer firmware updates.
The control panel can optionally receive firmware updates from RPS. Use one of the following communication methods:
- B426
- Plug-in cellular communicator: B440/B440-C/B441/B441-C/B442/B443/B444

**Notice**
Data rate apply
Cellular firmware updates require more time than Ethernet updates and carrier data rates apply.

**A wide variety of input options**
Each point:
- Single 1 kΩ, single 2 kΩ, dual 1 kΩ (1 kΩ + 1 kΩ), and No EOL (end-of-line) (EOL) resistor options (for on-board and B208 inputs)
- Programmable for Fire, Intrusion, Access, Gas, and Supervisory devices
- Supports hardwired and wireless devices
- Supports IP cameras by Bosch as point and output devices

**IP camera support**
The control panel can integrate directly with Bosch IP cameras, using them as fully supervised points and outputs.
Integration of cameras allows the camera’s video motion detection to activate points on the control panel. The control panel’s virtual outputs can be configured to trigger camera actions, including sending video snapshots via email.

**Security and fire detection**
The control panel provides eight on-board points, and up to 91 additional off-board points (depending on model and expansion interfaces). You can program individual points to monitor some types of burglar alarms, fire alarms, and supervision devices.

28 16 05

**Event log**
The event log stores up to 2048 local and reported events. The event log includes time, date, event, area, point, and user. View the event log from a keypad or use RPS to remotely retrieve event information. When the event log reaches a programmed threshold of stored events, it can send an optional report to a receiver.

**Scheduled events (SKEDs)**
The internal clock and calendar start individually scheduled events (SKEDs). SKEDs perform several functions such as turn on or off, relay control, or point bypassing.
The control panel offers:
- 40 scheduled events with up to 31 different functions
- 8 opening windows and 8 closing windows
- 8 user group windows
- Day-of-week, date-of-month, or holiday only schedules
- 4 holiday schedules of 366 days (leap year)

**Dual bus and SDI keypad retrofits**
The dual SDI2 device bus design provides greater installation flexibility, such as bus isolation for Intrusion and Fire. To use popular SDI keypads (for example D1255 and D1260), program one of the two SDI2 buses for SDI operation.

**ZONEX and POPEX retrofits**
To retrofit legacy Bosch control panels that use ZONEX and POPEX devices, the control panel is compatible with the B600 Retrofit (ZONEX) Module. The B600 adds two ZONEX buses to the control panel which can connect to existing legacy point bus (POPEX) devices (for example, the D8125).

**Programming**
Installers can perform limited programming on-site with a keypad (critical parameters; such as account IDs, central station and RPS IP addresses and phone numbers, reporting formats, and more). They can also do full programming on-site or remotely (attended or unattended) with RPS. A programmable system passcode prevents unauthorized remote programming.

**Diagnostics**
Keypads and RPS offer diagnostic help for monitoring and troubleshooting. The diagnostics features allow you to view the status of the wired and wireless devices. The features provide the status of the control panel and its connected devices, such as firmware version, power, and missing conditions. View the status of each area.

**Remote Security Control app**
The Remote Security Control (RSC) app allows users to control their security systems remotely from their devices. Users can:
- Turn their security system On or Off
- Turn specific areas On or Off
- Control outputs for applications such as lighting control
- View live video from Bosch IP cameras
- Grant access remotely by unlocking and locking doors

The app requires the installing dealer to create a Remote Access Profile for users, and to install the profile on their devices.

**Bosch Video Management System integration**
With Bosch Video Management System (Bosch VMS) and an intrusion system, the VMS operator has a single user interface to monitor and control the intrusion system combined with video surveillance. With Bosch VMS and a control panel, the operator can, for example:
- View videos triggered by intrusion events, including all relevant information such as areas, point, and user show in the display with the event.
- View areas, points, outputs, and doors – with their statuses – on the Bosch VMS map, providing the exact location in the system.
- Turn on (arm) and turn off (disarm) areas.
- Bypass and unbypass points.
- Lock and unlock doors (Bosch VMS 6.0 and higher).

Requirements to integrate Bosch VMS with a control panel:
- A licensed Bosch VMS system using Professional Editions v5.5 or higher or Bosch VMS Enterprise Edition v5.5 or higher.
- Expansion license to integrate the intrusion control panel. One license needed per control panel. Order number MBX-XINT-xx for the expansion license added to a Bosch VMS base license. Refer to the Bosch Video Management Software product page on the Bosch website, www.boschsecurity.com.
- Access to Remote Programming Software (RPS).

## Certifications and approvals

| Region | Regulatory compliance/quality marks | |
|---|---|---|
| USA | ANSI-SIA | CP-01-2010-Control Panel Standard - Features for False Alarm Reduction |
| Australia | RCM | [B9512G] |
| | RCM | [B8512G] |
| | RCM | ACMA |
| Europe | CE | EMC, LVD, RoHS [B9512G, B9512G-E, B8512G, B8512G-E] |
| USA | UL | [B9512G, B9512G-E, B8512G, B8512G-E, B299, B600, B901, B925F, B926F] |
| | UL | UL 294 - Standard for Access Control Units and Systems |
| | UL | UL 365 - Police Station Connected Burglar Alarm Units |
| | UL | UL 609 - Standard for Local Burglar Alarm Units and Systems |
| | UL | UL 636 - Holdup Alarm Units and Systems |
| | UL | UL 864 - Standard for Control Units and Accessories for Fire Alarm Systems |
| | UL | UL 985 - Household Fire Warning System Units |

28 16 05

| Region | Regulatory compliance/quality marks | |
|---|---|---|
| | UL | UL 1023 - Household Burglar Alarm System Units |
| | UL | UL 1076 - Proprietary Burglar Alarm Units and Systems |
| | UL | UL 1610 - Central Station Burglar Alarm Units |
| | UL | UL 1635 - Standard for Digital Alarm Communicator System Units |
| | FM | Central Station |
| | FM | Local Protective Signaling |
| | FM | Remote Station |
| | CSFM | California State Fire Marshal (see our website) |
| | FCC | Part 15 Class B |
| | FDNY-CoA | Fire Department of New York City [B9512G, B9512G-E, B8512G, B8512G-E] |
| Canada | ULC | [B9512G, B9512G-E, B8512G, B8512G-E, B299, B600, B901, B925F, B926F] |
| | ULC | CAN/ULC S303 - Local Burglar Alarm Units and Systems |
| | ULC | CAN/ULC S304 - Standard for Signal Receiving Center and Premise Burglar Alarm |
| | ULC | CAN/ULC S545 - Residential Fire Warning System Control Units |
| | ULC | CAN/ULC S559 - Fire Signal Receiving Centres and Systems |
| | ULC | ULC-ORD C1023 - Household Burglar Alarm System Units |
| | ULC | ULC-ORD C1076 - Proprietary Burglar Alarm Units and Systems |
| | IC | ICES-003 - Information Technology Equipment (ITE) |
| Brazil | ANATEL | 04450-16-01855 [B9512G, B8512G when used with B430 or B442] |

## Installation/configuration notes

**Notice**
Not all products and features are available in all regions. Consult your local Bosch representative for availability details.

### Compatible products

#### Keypads

B942/B942W Touch Screen Keypad (SDI2)

B930 ATM Style Alphanumeric Keypad (SDI2)

B926F Fire Keypad (SDI2)

B925F Fire Keypad (SDI2)

B921C Two-line Capacitive Keypad (SDI2)

B920 Two-line Alphanumeric Keypad (SDI2)

B915/B915I Basic Keypad (SDI2)

D1255 Series Keypads

D1260 Series Keypads

D1256RB Fire Keypad

D1257RB Remote Fire Alarm Annunciator

#### Power

D1640 16.5 VAC 40 VA Transformer

DE-45-18 Transformer

D126 Standby Battery (12 V, 7 Ah)

D1218 Battery (12 V, 18 Ah)

D122 Dual Battery Harness

D122L Dual Battery Harness with Long Leads

#### Enclosures

B8103 Universal Enclosure (White)

D8103 Universal Enclosure (Gray)

D8108A Attack Resistant Enclosure

D8108A-CE Attack Resistant Enclosure with Built-in Transformer

D8109 Fire Enclosure

#### Accessories

B56 Keypad Surface Mount Box

B96 Keypad Trim Bezel

B99 USB Direct Connect Cable

B501-10 Interconnect wiring cables (pack of 10)

D161 Dual Modular Telephone Cord (7 f)

D162 Modular Telephone Cord (2 ft)

D166 Telephone Jack (RJ31X)

#### Detectors

D7050 Series Addressable Photoelectric Smoke and Smoke Heat Detector Heads

F220-B6PM/S 12/24 VDC Addressable Detector Bases with POPITs

F220-B6 12/24 VDC Two-wire Base

F220-B6R Standard 12/24 VDC Four-wire Base)

F220-P Photoelectric Smoke Detector

28 16 05

F220-PTH Photoelectric Smoke Detector with +135°F (+57°C) Heat Sensor

F220-PTH Photoelectric Smoke Detector with +135°F (+57°C) Heat Sensor and Carbon Monoxide Sensors

F220-B6C 12/24 VDC Four-wire Base with Auxiliary Form C Relay

FCC-380 Carbon Monoxide Detector

FCH-T320 Heat Detector

FCP-OT320 Multisensor Detector Optical/Thermal

FCP-O320 Optical Smoke Detector

MX775i Addressable PIR Detector

MX794i Long Range Multiplex PIR Detector

MX934i Addressable PIR Detector

MX938i Addressable PIR Detector

ZX776Z PIR Detector

ZX794Z Long Range PIR Detector

ZX835 TriTech Microwave/PIR Detector

ZX935Z PIR Detector

ZX938Z PIR Detector

ZX970 PIR/Microwave Detector

Bosch conventional detectors, including Professional Series, Blue Line Gen2, Blue Line, Classic Line, Commercial Line, and Ceiling Mount motion detectors, as well as glass break, seismic, request-to-exit, photoelectric, heat, and smoke detectors.

**Modules**

B208 Octo-input Module

B299 POPEX Module

B308 Octo-output Module

B426 Conettix Ethernet Communication Module

B430 Plug-in Telephone Communicator

B440 Conettix Plug-in Cellular Communicator (using 3G)

B441 Conettix Plug-in Cellular Communicator (using CDMA)

B442 Conettix Plug-in Cellular Communicator (using GPRS)

B443 Conettix Plug-in Cellular Communicator (using HSPA+)

B450 Conettix Plug-in Communicator Interface

B520 Auxiliary Power Supply Module

B600 Retrofit (ZONEX) Module

B810 wireless receiver (RADION)

B820 SDI2 Inovonics Interface Module

B901 Access Control Module

D113 Battery Lead Supervision Module

D125B Dual Class B Initiating Module

D126 Standby Battery (12 V, 7 Ah)

D129 Class A Initiating Module

D130 Auxiliary Relay Module

D132A Smoke Detector Reversing Relay Module

D133 Single Relay Module

D134 Dual Relay Module

D185 Reverse Polarity Signaling Module

D192G Class “B”, Style Y Bell Circuit Supervision

D1218 Battery (12 V, 18 Ah)

D8125 Addressable Expansion Module

D8125MUX Multiplex Bus Interface

D8128D OctoPOPIT Eight-point Expander

D8129 Octo-relay Module

D8130 Door Release Module

D9127U/T POPIT Module

DS7461i Single-zone Input Module

DS7465i Input-output Module

D9210C Access Control Interface Module

ICP-EZTS Cover and Wall Tamper Switch

ICP-SDI-9114 SDI Splitter

**Applications**

Remote Programming Software (RPS or RPS-LITE) v6.03 and higher

Bosch Video Management System v5.5 and higher

Remote Security Control (RSC)

**Conettix receivers**
(Managed and configured with Conettix D6200 Programming/ Administration Software v2.10)

Conettix D6600 Communications Receiver/Gateway (with only D6641 line cards installed) with CPU version 01.10.00

Conettix D6100IPv6 Communications Receiver/Gateway with CPU version 61.10.00

Conettix D6100i Communications Receiver/Gateway with CPU version 61.10.00

**RADION wireless from Bosch**

B810 wireless receiver (RADION)

RFBT-A/RFBT bill trap

RFDL-11-A/RFDL-11 TriTech motion detector

RFDW-RM-A/RFDW-RM recessed mount door/window contact

28 16 05

RFDW-SM-A/RFDW-SM surface mount door/window contact

RFGB-A/RFGB glass break detector

RFKF-A/RFKF two-button keyfob

RFKF-FBS-A/RFKF-FBS four-button keyfob

RFKF-TBS-A/RFKF-TBS two-button keyfob

RFPB-SB-A/ RFPB-SB single-button panic

RFPB-TB-A/RFPB-TB two-button panic

RFRP-A/RFRP repeater

RFSM-A/RFSM smoke detector

RFPR-12-A/RFPR-12 PIR motion detector

RFPR-C12-A/RFPR-C12 PIR curtain motion detector

RFUN-A/RFUN universal transmitter

### Inovonics Wireless

B820 SDI2 Inovonics Interface Module

ENKIT-SDI2 SDI2 Inovonics Interface and Receiver Kit. Includes B820 and EN4200

EN1210 Universal Transmitter (Single-input)

EN1210EOL Universal Transmitter with EOL Resistor

EN1210W Door-Window Transmitter with Reed Switch

EN1215EOL Universal Transmitter with Wall Tamper, Reed Switch, and EOL Resistor

EN1223D Water-resistant Pendant Transmitter (Double-button)

EN1223S Water-resistant Pendant Transmitter (Single-button)

EN1224-ON Multiple-Condition Pendant Transmitter

EN1233D Necklace Pendant Transmitter (Double-button)

EN1233S Necklace Pendant Transmitter (Single-button)

EN1235D Beltclip Pendant Transmitter (Double-button)

EN1235DF Fixed-location Transmitter (Double-button)

EN1235S Beltclip Pendant Transmitter (Single-button)

EN1235SF Fixed-location Transmitter (Single-button)

EN1247 Glass-break Detector Transmitter

EN1249 Bill Trap Transmitter

EN1242 Smoke Detector Transmitter

EN1260 Wall Mount Motion Detector

EN1261HT High Traffic Motion Detector

EN1262 Motion Detector with Pet Immunity

EN1265 360° Ceiling Mount Motion Detector

EN4200 Serial Receiver

EN5040-T High Power Repeater with Transformer

## Technical specifications

### Properties

| | |
|---|---|
| Dimensions | 10.625 in x 7.75in x 1.875 in (26.99 x 19.69 x 4.76 cm) |
| Weight | 1.95 lbs (0.88 kg) |

### Communications

| | |
|---|---|
| Ethernet | 10/100 full duplex (N/A for “E” control panels) |

### Environmental considerations

| | |
|---|---|
| Relative humidity | 5% to 93% at +32°C (+90°F) |
| Temperature (operating) | 0°C to +49°C (+32°F to +120°F) |

### Power requirements

| | |
|---|---|
| Current (maximum) | Standby: 180 mA<br>Alarm: 260 mA |
| Output (alarm) | 2 A at 12 VDC |
| Output (auxiliary, continuous power, and switched auxiliary combined) | 1.4 A at 12 VDC nominal |
| Voltage (operating) | 12 VDC nominal |
| Voltage (AC) | 16.5 VAC 40 VA plug-in transformer (D1640/D1640-CA) |

### Wiring

| | |
|---|---|
| Terminal wire size | 12 AWG to 22 AWG (2.0 mm to 0.65 mm) |
| SDI2 wiring | Maximum distance – Wire size (unshielded wire only): 7,500 ft (2,286 m) – 22 AWG (0.65 mm) |

### Number of...

| | |
|---|---|
| Areas | 8 |
| Custom functions | 8 |
| Events | Up to 2048 |
| Passcode users | 500, plus 1 Installer passcode |
| Points | 99 (8 on-board, up to 91 off-board and virtual) |
| Programmable outputs | 99 (3 on-board, up to 96 off-board and virtual) |
| RF points | 91 |

28 16 05

| | |
|---|---|
| IP cameras | 8 |
| SKEDs | 40 |

## Ordering information

**B8512G IP control panel, 8 areas, 99 points**
Supports up to 99 points, 3 on-board outputs, and 8 areas for intrusion, commercial fire. On-board Ethernet.
Order number **B8512G**

**B8512G-E Control panel, 8 areas, 99 points, no IP**
The B8512G-E is available only in kits.
Order number **B8512G-E**

**B901 Door Controller**
Fully supervised, addressable SDI2/SDI bus device that allows access control integration for Bosch G and B Series Control Panels.
Order number **B901**

**Accessories**

**B520 Auxiliary power supply module, 2A 12V**
Provides auxiliary power to 12 VDC devices or to SDI2 modules.
Order number **B520**

**B208 SDI2 8-Input Expansion Module**
Provides 8 programmable inputs.
Order number **B208**

**B308 SDI2 8-Output Expansion Module**
Provides 8 programmable relays.
Order number **B308**

**B810 RECEIVER-SDI2**
Receives RF signals from RADION transmitters, repeaters, and glassbreaks. Operates at 433.42 MHz. For use with compatible SDI2 bus control panels.
Order number **B810**

**D122 Dual battery harness, 17" 18AWG**
Harness with circuit breaker. Connects two batteries (in parallel) to a compatible control panel.
Order number **D122**

**D122L Dual battery harness, 35", 12V**
Harness with circuit breaker and leads measuring 35 in. (89 cm). Connects two batteries (in parallel) to a compatible control panel in a separate enclosure.
Order number **D122L**

**D126 Battery, 12V 7Ah**
A rechargeable sealed lead-acid power supply used as a secondary power supply or in auxiliary or ancillary functions.
Order number **D126**

**D1218 Battery, 12V 18Ah**
The D1218 is a 12 V 18 Ah sealed lead-acid battery with two bolt-fastened terminals. It is used for standby and auxiliary power. It connects to a compatible control panel using a D122 or D122L Dual battery harness.
Order number **D1218**

**D137 Accessory mounting bracket for enclosure**
Used to mount accessory modules in B8103, D8103, D8108A, and D8109 enclosures.
Order number **D137**

**D1640 Transformer plug-in, 16V 40VA**
System transformer rated at 16.5 VAC, 40 VA.
Order number **D1640**

**D1640-CA 16VAC 40VA xfmr Canada**
For use in Canada. System transformer rated at 16.5 VAC, 40 VA.
Order number **D1640-CA**

**D9002-5 Mounting plate, 6 location 3-hole, 5 pcs**
5 pack of mounting skirts for B8103, D8103, D8108A, and D8109 enclosures. Each skirt can hold up to six standard 3-hole mounting modules.
Order number **D9002-5**

**D101 Enclosure lock and key set**
Short-body lock set with one key supplied. Uses the D102 (#1358) replacement key.
Order number **D101**

**D110 TAMPER SWITCH 2/PKG**
Screw-on tamper switch that fits all enclosures. Shipped in packages of two.
Order number **D110**

**ICP-EZTS TAMPER SWITCH-DUAL**
Combination tamper switch with a wire loop for additional tamper outputs.
Order number **ICP-EZTS**

**B8103 Universal enclosure, white**
White steel enclosure measuring 41 cm x 41 cm x 9 cm (16 in. x 16 in. x 3.5 in.).
Order number **B8103**

**D8103 Steel enclosure, large, grey**
Grey steel enclosure measuring 41 cm x 41 cm x 9 cm (16 in. x 16 in. x 3.5 in.).
Order number **D8103**

**D8108A Attack resistant enclosure, large, grey**
Grey steel enclosure measuring 41 cm x 41 cm x 9 cm (16 in. x 16 in. x 3.5 in.). UL Listed. Includes a lock and key set.
Order number **D8108A**

28 16 05

**D8109 Fire enclosure, 16x16x3.5", red**
Red enclosure measuring 16 in. x 16 in. x 3.5 in. (41 cm x 41 cm x 9 cm). Made from 16 gauge (1.5 mm) cold-rolled steel with a full-length hinge. Includes a lock and key set. UL Listed for commercial fire/ burglary alarm applications.
Order number **D8109**

**D8004 Transformer enclosure kit, grey**
For applications that might require a remote transformer in an enclosure. Can be used with B Series control panels and D9412GV4/D7412GV4 control panels.
Order number **D8004**

**BATB-40 Battery box/enclosure, 22x20.75x7.25"**
Holds two dry or wet cell batteries. Optional BATB-SHELF battery shelf increases number of batteries. Suitable for residential/commercial fire or burglary applications.
Order number **BATB-40**

**BATB-80 Battery box/enclosure, 14x20.75x7.25"**
Battery box/enclosure with shelf holds up to four dry or wet cell batteries. Suitable for residential/ commercial fire or burglary applications.
Order number **BATB-80**

**B99 USB direct connect cable**
Male A to Male A USB cable for local programming of control panels with on-board USB ports.
Order number **B99**

**B915 Basic Keypad**
Two-line alphanumeric basic keypad with English function keys.
Order number **B915**

**B915I LCD keypad, icon keys, SDI2**
Two-line alphanumeric basic keypad with icon function keys.
Order number **B915I**

**B920 2 Line Alpha Numeric Keypad (SDI2)**
Two-line alphanumeric keypad
Order number **B920**

**B921C Two-line Keypad w/Touch keys, Inputs**
Two-line alphanumeric keypad with inputs and capacitive touch keys in black.
Order number **B921C**

**B930 ATM Style-Alpha Numeric Keypad (SD12)**
Five-line ATM style alphanumeric keypad
Order number **B930**

**B942 Touch Screen KP Prox/Input/Output, black**
Black SDI2 touch screen keypad with inputs and one output.
Order number **B942**

**B942W Touch screen KP, prox/input/output,white**
White SDI2 touch screen keypad with inputs and one output.
Order number **B942W**

**B925F Fire and intrusion keypad, SDI2**
Two-line alphanumeric fire and intrusion keypad.
Order number **B925F**

**B926F Fire keypad, SDI2**
Two-line alphanumeric fire keypad
Order number **B926F**

**Software Options**

**D5500C-USB Kit with DVD and USB security dongle**
Account management and control panel programming software with USB security key (dongle).
Order number **D5500C-USB**

28 16 05

**Represented by:**

**Europe, Middle East, Africa:**
Bosch Security Systems B.V.
P.O. Box 80002
5600 JB Eindhoven, The Netherlands
Phone: + 31 40 2577 284
emea.securitysystems@bosch.com
emea.boschsecurity.com

**Germany:**
Bosch Sicherheitssysteme GmbH
Robert-Bosch-Ring 5
85630 Grasbrunn
Germany
www.boschsecurity.com

**North America:**
Bosch Security Systems, Inc.
130 Perinton Parkway
Fairport, New York, 14450, USA
Phone: +1 800 289 0096
Fax: +1 585 223 9180
onlinehelp@us.bosch.com
www.boschsecurity.us

**Asia-Pacific:**
Robert Bosch (SEA) Pte Ltd, Security Systems
11 Bishan Street 21
Singapore 573943
Phone: +65 6571 2808
Fax: +65 6571 2699
apr.securitysystems@bosch.com
www.boschsecurity.asia

© Bosch Security Systems 2017 | Data subject to change without notice
13825824395 | en, V23, 22. Aug 2017

# D101 Lock and Key Set

www.boschsecurity.com

28 16 05

BOSCH
Invented for life




Short-body lock set with one key supplied. Uses the D102 (#1358) replacement key.

## Ordering information

**D101 Lock and Key Set**
Short-body lock set with one key supplied. Uses the D102 (#1358) replacement key.
Order number **D101**

# D122L Dual Battery Harness with Long Leads

www.boschsecurity.com

28 16 05

BOSCH
Invented for life



Color-coded wire harness with circuit breaker to protect the charging circuit when connecting multiple 12 V batteries to a control panel. The leads accommodate the installation of extra 12 V batteries in an adjacent enclosure.

## Certifications and approvals

| Region | Certification | |
|---|---|---|
| USA | UL | AOTX: Local Alarm Units (UL464, UL609), APAW: Police Station Alarm Units (UL365, UL464) |
| | CSFM | see our website |

## Parts included

| Quantity | Component |
|---|---|
| 1 | D122L Battery Harness |
| 1 | Lit – Installation Manual |

## Ordering information

**D122L Dual Battery Harness with Long Leads**
Color-coded harness with circuit breaker and leads measuring 89 cm (35 in.). Connects 12 V batteries to compatible control panels.
Order number **D122L**

# D161 Dual Modular Telephone Cord

www.boschsecurity.com

28 16 05

BOSCH
Invented for life



- Connects an RJ31X Telco block to an RJ38X Telco jack
- 2.1 m (7 ft.) for longer distances

## Certifications and approvals

| Region | Certification | |
|---|---|---|
| USA | CSFM | see our website |

## Parts included

| Quantity | Component |
|---|---|
| 1 | Telephone cord |

## Technical specifications

| | |
|---|---|
| Length | 2.1 m (7 ft.) |
| Color | Gray |

## Ordering information

**D161 Dual Modular Telephone Cord**
A 2.1 m (7 ft.), 8-conductor fully modular plug-in cord.
Order number **D161**

# D1640-CA Transformer

www.boschsecurity.com

28 16 05

BOSCH
Invented for life




- System transformer rated at 16.5 VAC, 40 VA
- Suitable for use on approved ULC and cUL applications in Canada

For use in Canada. System transformer rated at 16.5 VAC, 40 VA.

## Parts included

| Quantity | Component |
|---|---|
| 1 | Transformer |

## Technical specifications

| | |
|---|---|
| Rating | 16.5 VAC, 40 VA |
| Dimensions | 3.2 in x 2.8 in x 2.2 in<br>(81 mm x 70 mm x 56 mm) |
| Color | White |

## Ordering information

**D1640-CA Transformer**
For use in Canada. System transformer rated at 16.5 VAC, 40 VA.
Order number **D1640-CA**

# D126 Standby Battery (12 V, 7 Ah)

www.boschsecurity.com

28 16 05

BOSCH
Invented for life




- 12 VDC sealed lead-acid
- Fully rechargeable
- Maintenance-free
- For use as secondary power for accessory modules
- Long service life

A maintenance-free, sealed lead-acid, standby and auxiliary power supply that provides long service life and dependability.
The battery is for use only with charging circuits calibrated for lead-acid batteries. It is suitable for supplying backup power for fire, security, and access control systems during AC power failures.
The D126 fits in any of the currently offered enclosures and connects to the two color-coded battery leads supplied with the control panel or module. Use a D122 Dual Battery Harness to connect two D126 batteries in parallel and double the amp hour output.

## Certifications and approvals

| | |
|---|---|
| NYC/BSA | 582-85-SA |
| DSI | CDFM |

| Region | Certification | |
|---|---|---|
| Europe | CE | Council Directive 89/336/EEC Electromagnetic Compatibility |
| USA | UL | ALVY: Access Control Systems Units (UL294), APOU: Proprietary Alarm Units (UL1076), UEHX7: Signaling Appliances, Miscellaneous Certified for Canada (cUL) |

| Region | Certification | |
|---|---|---|
| | FM | |
| | CSFM | 7167-1615: 0100 CONTROL UNIT (HOUSEHOLD) |
| | CSFM | 7165-1615: 0113 FIRE ALARM CONTROL UNIT (COMMERCIAL) |
| | CSFM | 7167-1615:0124 7167 -- CONTROL UNIT (HOUSEHOLD) |
| | CSFM | 7165-1615:0119 7165 -- FIRE ALARM CONTROL UNIT (COMMERCIAL) |
| | CSFM | 7167-1615:0239 7167 -- CONTROL UNIT (HOUSEHOLD) |

## Installation/configuration notes

**Standby Power Requirements**
Refer to the appropriate control panel installation manual for information on calculating the standby battery requirements for the system. Total continuous and intermittent current requirements must not exceed the amp hour capacity of the battery.

## Technical specifications

| | |
|---|---|
| Capacity: | 12 V, 7 Ah |
| Compatible Panels: | Compatible with all control panels |

28 16 05

| | |
|---|---|
| Dimensions: | 15 cm x 8 cm (6 in. x 3 in.) |
| Height with Terminals: | 10 cm (4 in.) |
| Weight: | 2.5 kg (5.5 lb) |

## Ordering information

**D126 Standby Battery (12 V, 7 Ah)**
A rechargeable sealed lead-acid power supply used as a secondary power supply or in auxiliary or ancillary functions.
Order number **D126**

**Represented by:**

**Americas:**
Bosch Security Systems, Inc.
130 Perinton Parkway
Fairport, New York, 14450, USA
Phone: +1 800 289 0096
Fax: +1 585 223 9180
security.sales@us.bosch.com
www.boschsecurity.us

**Europe, Middle East, Africa:**
Bosch Security Systems B.V.
P.O. Box 80002
5617 BA Eindhoven, The Netherlands
Phone: + 31 40 2577 284
Fax: +31 40 2577 330
emea.securitysystems@bosch.com
www.boschsecurity.com

**Asia-Pacific:**
Robert Bosch (SEA) Pte Ltd, Security Systems
11 Bishan Street 21
Singapore 573943
Phone: +65 6571 2808
Fax: +65 6571 2699
apr.securitysystems@bosch.com
www.boschsecurity.asia

**China:**
Bosch (Shanghai) Security Systems Ltd.
201 Building, No. 333 Fuquan Road North IBP
Changning District, Shanghai
200335 China
Phone +86 21 22181111
Fax: +86 21 22182398
www.boschsecurity.com.cn

**America Latina:**
Robert Bosch Ltda Security Systems Division
Via Anhanguera, Km 98
CEP 13065-900
Campinas, Sao Paulo, Brazil
Phone: +55 19 2103 2860
Fax: +55 19 2103 2862
latam.boschsecurity@bosch.com
www.boschsecurity.com

© Bosch Security Systems 2013 | Data subject to change without notice
2548450571 | en, V4, 01. Oct 2013

# D166 Telephone Jack

www.boschsecurity.com

28 16 05

BOSCH
Invented for life



## Ordering information

**D166 Telephone Jack**
Standard Telco RJ31X Telephone Jack measuring approximately 5 cm (2 in.) square by 2.5 cm (1 in.) high.
Order number **D166**

# Professional Series TriTech Curtain Motion Detectors

www.boschsecurity.com

28 16 05

BOSCH
Invented for life

## Curtain type motion detector



- 30 m (100 ft) x 2.6 m (8.5 ft) standard coverage
- 2.1 m to 3 m (7 ft to 10 ft) mounting height, no adjustments required, optional lookdown masking
- Sensor data fusion technology
- Range adaptive radar and active white light suppression
- Dynamic temperature compensation

The Professional Series TriTech Curtain Detectors are exceptionally suited for commercial indoor applications. Sensor data fusion technology ensures that the detector sends alarm conditions based on precise information. The powerful combination of unique features in the Professional Series delivers superior catch performance and virtually eliminates false alarms.
The self-locking two-piece enclosure, built-in bubble level, flexible mounting height, and three optional mounting brackets simplify installation and reduce service time.

## Functions

**Sensor Data Fusion Technology**
Sensor data fusion technology is a unique feature that uses a sophisticated software algorithm to gather signals from five sensors: two pyroelectric sensors, a range adaptive radar sensor, a room temperature sensor, and a white light level sensor. The microcontroller analyzes and compares the sensor data to make the most intelligent alarm decisions in the security industry.

**Range Adaptive Radar**
The microwave transceiver automatically adjusts its detection thresholds based on input from the PIR sensors. Integrating the target distance information from the PIR significantly reduces false alarms from the microwave Doppler radar.

**Active White Light Suppression**
An internal light sensor measures the level of light intensity directed at the face of the detector. Sensor data fusion technology uses this information to eliminate false alarms from bright light sources.

**Dynamic Temperature Compensation**
The detector automatically adjusts PIR sensitivity to identify human intruders at critical temperatures. Dynamic temperature compensation detects human body heat accurately, avoids false alarms, and delivers consistent catch performance at all operating temperatures.

**Cover and Wall Tamper Switch**
When an intruder removes the cover or attempts to separate the detector from the wall, a normally-closed contact opens to alert the control panel.

28 16 05

**Self-adjusting LEDs**
The LED brightness adjusts automatically to the surrounding light level. A blue light-emitting diode (LED) indicates TriTech+ alarms and activates during a walk test. A yellow LED indicates microwave detection, and a red LED indicates PIR detection.

**Remote Walk Test LED**
Users can enter a command through a keypad, a control center, or programming software to remotely enable or disable the walk test LED.

**Alarm Memory**
Alarm memory flashes the alarm LED to indicate stored alarms for use in multiple unit applications. A switched voltage from the control panel controls the alarm memory.

**Solid State Relays**
Solid state relays send silent alarm output signals to provide a higher level of security and reliability. An external magnet does not activate the relay. The solid state relay uses less current than a mechanical relay, providing longer standby capacity during a power loss.

**Draft, Insect, and Small Animal Immunity**
The sealed optic chamber provides immunity to drafts and insects, reducing false alarms. Small animal immunity reduces false alarms caused by animals less than 4.5 kg (10 lb), such as rodents.

**Remote Self Test**
A remote self test initiates when the walk test input switches to its true state. The alarm relay and alarm LED activate for four seconds following a successful test. The trouble relay activates, and the alarm LED flashes following a failed test.

**Input Power Supervision**
When the power is lower than 8 V, a low input power trouble condition activates the trouble relay and causes the LED to flash. The trouble condition clears automatically when power reaches or exceeds 8 V.

**Trouble Memory**
When the walk test input switches to its true state for less than two seconds, the LED flashes to indicate the most recent trouble condition. If there is no trouble in memory, the LED does not flash. After twelve hours, or after the detector receives a second walk test pulse for two seconds or less, the LED stops flashing and the trouble memory clears.

**Cloak and Camouflage Detection Technology**
Cloak and Camouflage Detection Technology ($C^2DT$) maximizes catch performance against intruders attempting to cover their infrared signal.

**DIP Switch Programming**
The following functions are all programmed using DIP switch settings:
- Local Walk Test LED
- Remote Walk Test Input Polarity
- Alarm Memory Polarity
- MANTIS Anti-mask On and Off

## Certifications and approvals

| | | |
|---|---|---|
| Europe | WEEE | Waste Electrical and Electronic Equipment Directive |
| The detectors are designed to also comply with requirements of: | | |
| USA | FCC | Complies with Part 15 |

| Region | Regulatory compliance/quality marks | |
|---|---|---|
| Australia | RCM | [ISC-PDL1-WC30G] |
| USA | UL | [ISC-PDL1-WC30G] |
| Brazil | ANATEL | [ISC-PDL1-WC30G] |

## Installation/configuration notes

### Coverage Patterns

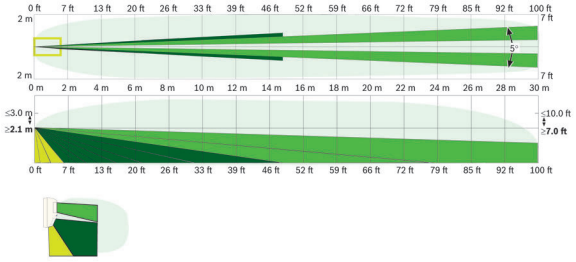




**Standard Curtain Coverage 30 m x 2.6 m (100 ft x 8.6 ft)**

### Mounting
The recommended mounting height is 2 m to 3 m (7 ft to 10 ft) with no adjustments required.
Mount the motion detector level, both horizontally and vertically.
Mounting options:
- On a flat wall (surface, semi-flush), with the optional B335-3 Swiveling low-profile mount, or with the optional B328 Gimbal-mount Bracket
- In a corner (the junction of two perpendicular walls)
- On the ceiling with the optional B338 Universal Ceiling-mount Bracket

### Wiring Considerations
Recommended wire size is 0.2 $mm^2$ to 1 $mm^2$ (26 AWG to 16 AWG).

## Technical specifications

### Electrical

| Power Requirements | |
|---|---|
| Voltage (Operating): | 9 VDC to 15 VDC |
| Current (Maximum): | < 26 mA with alarm, trouble, and LEDs active. |
| Current (Standby): | 18 mA at 12 VDC |
| **Outputs for both Models** | |

28 16 05

| | |
|---|---|
| Tamper: | Normally-closed (NC) contacts (with cover on) rated at 25 VDC, 125 mA maximum. Connect tamper circuit to 24-hour protection circuit. |
| Trouble: | Solid state relay normally-closed (NC) contacts. |
| Alarm: | Solid state relay, normally-closed (NC) contacts, power supervised. 3 W, 125 mA, 25 DC, resistance < 10 Ω. |

## Mechanical

### Enclosure Design

| | |
|---|---|
| Color: | White |
| Dimensions: | 127 mm x 69 mm x 58 mm (5 in. x 2.75 in. x 2.25 in.) |
| Material: | High-impact ABS plastic |

### Indicators

| | |
|---|---|
| Alarm Indicator: | • Blue LED for TriTech+ alarms |
| | • Yellow LED for microwave detection |
| | • Red LED for PIR detection |

### Zones

| | |
|---|---|
| Zones: | 28 |

## Environmental

| | |
|---|---|
| Relative Humidity: | 0 to 95%, non-condensing |
| Temperature (Operating and Storage): | -30°C to +55°C (-22°F to +130°F) *For UL Certificated installations, 0°C to +49°C (+32°F to +120°F)* |
| Protection Rating (EN 60529, EN 50102): | IP41, IK04 |

## Ordering information

**ISC-PDL1-WC30G Motion detector, 100ft (30m), curtain**
Provides PIR and microwave, 30 m x 3 m (100 ft x 10 ft) coverage.
Order number **ISC-PDL1-WC30G**

**B328 Mounting bracket, gimbal**
Mounts on a single-gang box and allows rotation of a detector. Wires are hidden inside.
Order number **B328**

**B335-3 Mounting bracket, swivel, low profile**
Swiveling, low-profile, universal bracket for wall mounting. The vertical swivel range is +10° to -20°, while the horizontal swivel range is ±25°.
Order number **B335-3**

**B338 Mounting bracket, ceiling, universal**
Swiveling universal bracket for ceiling mounting. The vertical swivel range is +7° to -16°, while the horizontal swivel range is ±45°.
Order number **B338**

**ISC-PDL1-WC30H Motion detector 30m curtain, 10.588GHz**
Provides PIR and microwave, 30 m x 3 m (100 ft x 10 ft) coverage. For use in France and the United Kingdom.
Order number **ISC-PDL1-WC30H**

**B328 Mounting bracket, gimbal**
Mounts on a single-gang box and allows rotation of a detector. Wires are hidden inside.
Order number **B328**

**B335-3 Mounting bracket, swivel, low profile**
Swiveling, low-profile, universal bracket for wall mounting. The vertical swivel range is +10° to -20°, while the horizontal swivel range is ±25°.
Order number **B335-3**

**B338 Mounting bracket, ceiling, universal**
Swiveling universal bracket for ceiling mounting. The vertical swivel range is +7° to -16°, while the horizontal swivel range is ±45°.
Order number **B338**

### Accessories

**B328 Mounting bracket, gimbal**
Mounts on a single-gang box and allows rotation of a detector. Wires are hidden inside.
Order number **B328**

**B335-3 Mounting bracket, swivel, low profile**
Swiveling, low-profile, universal bracket for wall mounting. The vertical swivel range is +10° to -20°, while the horizontal swivel range is ±25°.
Order number **B335-3**

**B338 Mounting bracket, ceiling, universal**
Swiveling universal bracket for ceiling mounting. The vertical swivel range is +7° to -16°, while the horizontal swivel range is ±45°.
Order number **B338**

28 16 05

**Represented by:**

**Europe, Middle East, Africa:**
Bosch Security Systems B.V.
P.O. Box 80002
5600 JB Eindhoven, The Netherlands
Phone: + 31 40 2577 284
emea.securitysystems@bosch.com
emea.boschsecurity.com

**Germany:**
Bosch Sicherheitssysteme GmbH
Robert-Bosch-Ring 5
85630 Grasbrunn
Germany
www.boschsecurity.com

**North America:**
Bosch Security Systems, Inc.
130 Perinton Parkway
Fairport, New York, 14450, USA
Phone: +1 800 289 0096
Fax: +1 585 223 9180
onlinehelp@us.bosch.com
www.boschsecurity.us

**Asia-Pacific:**
Robert Bosch (SEA) Pte Ltd, Security Systems
11 Bishan Street 21
Singapore 573943
Phone: +65 6571 2808
Fax: +65 6571 2699
apr.securitysystems@bosch.com
www.boschsecurity.asia

© Bosch Security Systems 2018 | Data subject to change without notice
2610618763 | en, V44, 11. Jan 2018

# Professional Series TriTech Motion Detectors

www.boschsecurity.com

BOSCH
Invented for life



- 18 m x 25 m (60 ft x 80 ft) coverage, field selectable to 8 m x 10 m (25 ft x 33 ft)
- Sensor data fusion technology
- Tri-focus optics technology
- Range adaptive radar
- Microwave anti-mask

The ISC-PDL1-W18x Professional Series TriTech Detectors are exceptionally suited for commercial indoor applications. Sensor data fusion technology ensures that the detectors send alarm conditions based on precise information. Tri-focus optics eliminate coverage gaps and respond efficiently to intruders. The powerful combination of unique features in the Professional Series delivers superior catch performance and virtually eliminates false alarms.
The self-locking two-piece enclosure, built-in bubble level, flexible mounting height, and three optional mounting brackets simplify installation and reduce service time.

## Functions

**Sensor Data Fusion Technology**
Sensor data fusion technology is a unique feature that uses a sophisticated software algorithm to gather signals from five sensors: two pyroelectric sensors, range adaptive radar, a room temperature sensor, and a white light level sensor. The microcontroller analyzes and compares the sensor data to make the most intelligent alarm decisions in the security industry.

**Tri-focus Optics Technology**
Tri-focus optics technology uses optics with three specific focal lengths: long-range coverage, middle-range coverage, and short-range coverage. The detector applies the three focal lengths to 86 detection zones, which combine to make 11 solid curtains of detection. Tri-focus optics technology also includes two pyroelectric sensors, which deliver twice the standard optical gain. The sensors process multiple signals to deliver precise performance virtually free of false alarms.

**Range Adaptive Radar**
The microwave transceiver automatically adjusts its detection thresholds based on input from the PIR sensors. Integrating the target audience distance information from the PIR significantly reduces false alarms from the microwave Doppler radar.

**Microwave Anti-mask**
The detector sends a supervision-trouble signal if microwave reflective material is placed within 30.5 cm (1 ft) of the detector.

**Supervised Microwave and PIR**
The detector provides single technology coverage if the microwave subsystem fails.

**Active White Light Suppression**
An internal light sensor measures the level of light intensity directed at the face of the detector. Sensor data fusion technology uses this information to eliminate false alarms from bright light sources.

**Field Selectable Coverage (18 m x 25 m or 8 m x 10 m)**
Installers can use a DIP switch to select 18 m x 25 m or 8 m x 10 m (60 ft x 80 ft or 25 ft x 33 ft) coverage.

**Dynamic Temperature Compensation**
The detector automatically adjusts PIR sensitivity to identify human intruders at critical temperatures. Dynamic temperature compensation detects human body heat accurately, avoids false alarms, and delivers consistent catch performance at all operating temperatures.

**Cover and Wall Tamper Switch**
When an intruder removes the cover or attempts to separate the detector from the wall, a normally-closed contact opens to alert the control panel.

**Self-adjusting LED**
The LED brightness adjusts automatically to the surrounding light level. A blue light-emitting diode (LED) indicates dual alarms and activates during a walk test. A yellow LED indicates microwave detection, and a red LED indicates PIR detection.

**Remote Walk Test LED**
Users can type a command through a keypad, a control center, or programming software to remotely enable or disable the walk test LED. Users can locally enable or disable the walk test LED through the DIP switch.

**Alarm Memory**
Alarm memory flashes the alarm LED to indicate stored alarms for use in multiple unit applications. A switched voltage from the control panel controls the alarm memory.

**Solid State Relays**
Solid state relays send silent alarm output signals to provide a higher level of security and reliability. An external magnet does not activate the relay. The solid state relay uses less current than a mechanical relay, providing longer standby capacity during a power loss.

**Draft, Insect, and Small Animal Immunity**
The sealed optic chamber provides immunity to drafts and insects, reducing false alarms. Small animal immunity reduces false alarms caused by animals less than 4.5 kg (10 lb), such as rodents.

**Remote Self Test**
A remote self test initiates when the walk test input switches to its true state. The alarm relay and alarm LED activate for four seconds following a successful test. The trouble relay activates, and the alarm LED flashes following a failed test.

**Input Power Supervision**
When the power is lower than 8 V, a low input power trouble condition activates the trouble relay and causes the LED to flash. The trouble condition clears automatically when power reaches or exceeds 8 V.

**Trouble Memory**
When the walk test input switches to its true state for less than two seconds, LED flashes to indicate the most recent trouble condition. If there is no trouble in memory, the LED does not flash. After twelve hours, or after the detector receives a second walk test pulse for two seconds or less, the LED stops flashing and the trouble memory clears.

**Cloak and Camouflage Detection Technology**
Cloak and Camouflage Detection Technology ($C^2DT$) maximizes catch performance against intruders attempting to cover their infrared signal.

## Certifications and approvals

The detectors are designed to also comply with the requirements of:

Australia C-Tick

| Region | Regulatory compliance/quality marks | |
|---|---|---|
| Australia | SCEC | [ISC-PDL1-W18G, ISC-PDL1-WA18G] |
| USA | UL | [ISC-PDL1-W18G] |
| | UL | UL 639 - Standard for Intrusion Detection Units |
| | FCC | [ISC-PDL1-W18G] |
| Canada | IC | [ISC-PDL1-W18G] |
| China | CCC | 2009031901000559 [ISC-PDL1-W18G-CHI] |
| Brazil | ANATEL | [ISC-PDL1-W18G] |

## Installation/configuration notes

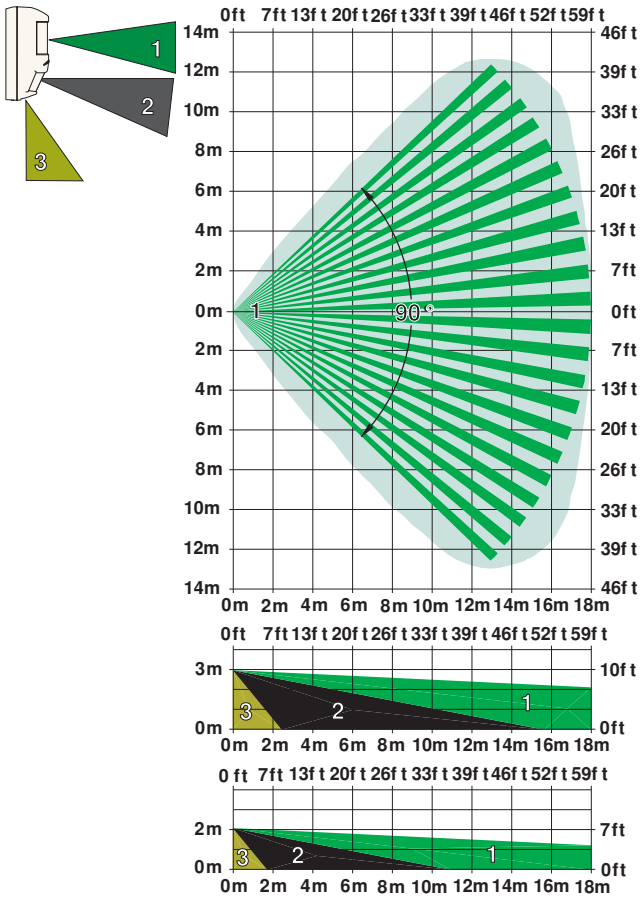


Long-range Coverage 18 m x 25 m (60 ft x 80 ft)

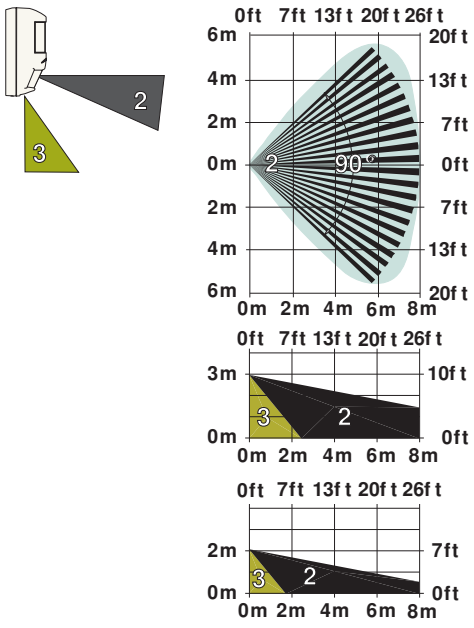


Selectable Short-range Coverage 8 m x 10 m (25 ft x 33 ft)

### Mounting

The recommended mounting height is 2 m to 3 m (7 ft to 10 ft) with no adjustments required.
Mount the motion detector level, both horizontally and vertically.
Mounting options:

- On a flat wall (surface, semi-flush), with the optional B335-3 Swiveling low-profile mount, or with the optional B328 Gimbal-mount Bracket
- In a corner (the junction of two perpendicular walls)
- On the ceiling with the optional B338 Universal Ceiling-mount Bracket

### Wiring Considerations

Recommended wire size is 0.2 $mm^2$ to 1 $mm^2$ (26 AWG to 16 AWG).

## Technical specifications

### Electrical

| | |
|---|---|
| **Power Requirements** | |
| Voltage (Operating): | 9 VDC to 15 VDC |
| Current (Maximum): | < 25 mA |
| Current (Standby): | 13 mA |
| **Outputs** | |
| Relay: | Solid state relay, normally-closed (NC) contacts power supervised. 3 W, 125 mA, 25 VDC, resistance < 10 Ω. |
| Tamper: | Normally-closed (NC) contacts (with cover on) rated at 25 VDC, 125 mA maximum. Connect tamper circuit to 24-hour protection circuit. |
| Trouble: | Solid-state relay normally-closed (NC) contacts. |

### Mechanical

| | |
|---|---|
| **Enclosure Design** | |
| Color: | White |
| Dimensions: | 136 mm x 69 mm x 58 mm (5.25 in. x 2.75 in. x 2.25 in.) |
| Material: | High-impact ABS plastic |
| **Indicators** | |
| Alarm Indicator: | • Blue LED for TriTech alarms |
| | • Yellow LED for microwave detection |
| | • Red LED for PIR detection |
| **Zones** | |
| Zones: | 86 |

| Frequency Information | |
|---|---|
| Radio Frequency Interference (RFI) immunity: | No alarm or setup on critical frequencies in the range from 26 MHz to 1 GHz at 50 V/m. |

## Environmental

| | |
|---|---|
| Relative Humidity: | 0 to 95%, non-condensing |
| Temperature (Operating and Storage): | -29°C to +55°C (-20°F to +130°F)<br>*For UL Certificated installations, 0°C to +49°C (+32°F to +120°F)* |
| Protection Rating: | IP41, IK04 (EN 60529, EN 50102) |

## Ordering information

**ISC-PDL1-W18G Motion detector, 60ft (18m)**
Provides PIR and microwave, 18 m x 25 m (60 ft x 80 ft) coverage. 10.525 GHz frequency.
Order number **ISC-PDL1-W18G**

**ISC-PDL1-W18H Motion detector, 18m, 10.588GHz**
Provides PIR and microwave, 18 m x 25 m (60 ft x 80 ft) coverage. 10.588 GHz frequency. For use in France and United Kingdom.
Order number **ISC-PDL1-W18H**

### Accessories

**B328 Mounting bracket, gimbal**
Mounts on a single-gang box and allows rotation of a detector. Wires are hidden inside.
Order number **B328**

**B335-3 Mounting bracket, swivel, low profile**
Swiveling, low-profile, universal bracket for wall mounting. The vertical swivel range is +10° to -20°, while the horizontal swivel range is ±25°.
Order number **B335-3**

**B338 Mounting bracket, ceiling, universal**
Swiveling universal bracket for ceiling mounting. The vertical swivel range is +7° to -16°, while the horizontal swivel range is ±45°.
Order number **B338**

**Represented by:**

**Europe, Middle East, Africa:**
Bosch Security Systems B.V.
P.O. Box 80002
5600 JB Eindhoven, The Netherlands
Phone: + 31 40 2577 284
emea.securitysystems@bosch.com
emea.boschsecurity.com

**Germany:**
Bosch Sicherheitssysteme GmbH
Robert-Bosch-Ring 5
85630 Grasbrunn
Germany
www.boschsecurity.com

**North America:**
Bosch Security Systems, Inc.
130 Perinton Parkway
Fairport, New York, 14450, USA
Phone: +1 800 289 0096
Fax: +1 585 223 9180
onlinehelp@us.bosch.com
www.boschsecurity.us

**Asia-Pacific:**
Robert Bosch (SEA) Pte Ltd, Security Systems
11 Bishan Street 21
Singapore 573943
Phone: +65 6571 2808
Fax: +65 6571 2699
apr.securitysystems@bosch.com
www.boschsecurity.asia

© Bosch Security Systems 2018 | Data subject to change without notice
2607960459 | en, V40, 04. Jan 2018

# ISN-CSD70 and ISN-CSD80 Compact Contacts

www.boschsecurity.com

BOSCH
Invented for life



- Closed loop
- Sensitive non-stick rhodium reed
- Bent long leads keep solder off the glass of the reed
- Two solder points on the wire
- Thick plastic shell resists crushing

The contacts are available in brown or white. All models have a rugged, one-piece construction that eliminates the need for extra donut adapters. The compact (stubby) design allows you to use the contact in smaller spaces, without paying for a miniature design. Use on steel doors in standard or tight-fitting applications.

**Notice**
The photograph shows model ISN-CSD80-W.

## Certifications and approvals

UL and

| Region | Certification | |
|---|---|---|
| Europe | CE | 73/23/EEC and 93/68/EEC, EN50131: 1997, EN50131-6: 1997, EN60950: 2000, EN60335-1: 1994 +A1: 1996 Annex B |
| USA | UL | cULus: AMQV: Connectors and Switches (UL 634), AMQV7: Connectors and Switches Certified for Canada (ULC/ ORD-C634) [-CSD70 Series] |
| | UL | cULus: AMQV: Connectors and Switches (UL 634), AMQV7: Connectors and Switches Certified for Canada (ULC/ ORD-C634) [-CSD80 Series] |

## Installation/configuration notes

**Compatibility Information**
All contact models are compatible with control panel models that accept contact inputs.

## Parts included

| Quantity Per Package | Component |
|---|---|
| 10 | Contacts |
| 10 | Magnets |

## Technical specifications

### Specifications for All Models

| | |
|---|---|
| Gap Width: | 38 mm (1.5 in.) |
| Wire Lead Type: | 0.8 mm (0.029 in.) 22 AWG, 7 stranded |
| Wire Lead Length: | 46 cm (18 in.) standard leads |
| Switch Configuration Type: | Single pole single throw (SPST) |
| Operating Temperature Range: | 7.2°C to -95.56°C (-45°F to -140°F) |

### Specifications for ISN-CSD70-B/W Models

| | |
|---|---|
| Contact Dimensions: | 19 mm x 20.3 mm (0.75 in. x 0.80 in.) |
| Maximum Contact Resistance: | 150 µΩ (micro-ohm) |
| Minimum Breakdown Voltage: | 250 VDC |
| Insulation Resistance: | $10^{10}$ Ω |
| Electrostatic Cap: | 0.3 PF |
| Contact Capacity: | 10 VAC |
| Maximum Conductive Current: | 1.0 A |
| Maximum Voltage: | 100 V |

### Specifications for ISN-CSD80-B/W Models

| | |
|---|---|
| Contact Dimensions: | 25 mm x 20 mm (1 in. x 0.80 in.) |
| Maximum Contact Resistance: | 150 µΩ (micro-ohm) |
| Minimum Breakdown Voltage: | 250 VDC |
| Insulation Resistance: | $10^{10}$ Ω |
| Electrostatic Cap: | 0.3 PF |
| Contact Capacity: | 10 VAC |
| Maximum Conductive Current: | 1.0 A |
| Maximum Voltage: | 100 V |

### Package Information

**ATTENTION! Each package contains ten contacts and ten magnets.**

## Ordering information

**Brown Compact Contact with Standard Magnet (19 mm)**
Brown recessed contact with 19 mm (0.75 in.) diameter. Includes a standard magnet. **Package contains ten contacts and ten magnets.**
Order number **ISN-CSD70-B**

**White Compact Contact with Standard Magnet (19 mm)**
White recessed contact with 19 mm (0.75 in.) diameter. Includes a standard magnet. **Package contains ten contacts and ten magnets.**
Order number **ISN-CSD70-W**

**White Compact Contact with Standard Magnet (25 mm)**
White recessed contact with 25 mm (1 in.) diameter. Includes standard magnet. **Package contains ten contacts and ten magnets.**
Order number **ISN-CSD80-W**

**Represented by:**

**Americas:**
Bosch Security Systems, Inc.
130 Perinton Parkway
Fairport, New York, 14450, USA
Phone: +1 800 289 0096
Fax: +1 585 223 9180
security.sales@us.bosch.com
www.boschsecurity.us

**Europe, Middle East, Africa:**
Bosch Security Systems B.V.
P.O. Box 80002
5617 BA Eindhoven, The Netherlands
Phone: + 31 40 2577 284
Fax: +31 40 2577 330
emea.securitysystems@bosch.com
www.boschsecurity.com

**Asia-Pacific:**
Robert Bosch (SEA) Pte Ltd, Security Systems
11 Bishan Street 21
Singapore 573943
Phone: +65 6571 2808
Fax: +65 6571 2699
apr.securitysystems@bosch.com
www.boschsecurity.asia

**China:**
Bosch (Shanghai) Security Systems Ltd.
201 Building, No. 333 Fuquan Road North IBP
Changning District, Shanghai
200335 China
Phone +86 21 22181111
Fax: +86 21 22182398
www.boschsecurity.com.cn

**America Latina:**
Robert Bosch Ltda Security Systems Division
Via Anhanguera, Km 98
CEP 13065-900
Campinas, Sao Paulo, Brazil
Phone: +55 19 2103 2860
Fax: +55 19 2103 2862
latam.boschsecurity@bosch.com
www.boschsecurity.com

© Bosch Security Systems 2013 | Data subject to change without notice
2646726155 | en, V1, 01. Oct 2013

# B520 Auxiliary Power Supply Module

www.boschsecurity.com

BOSCH
Invented for life

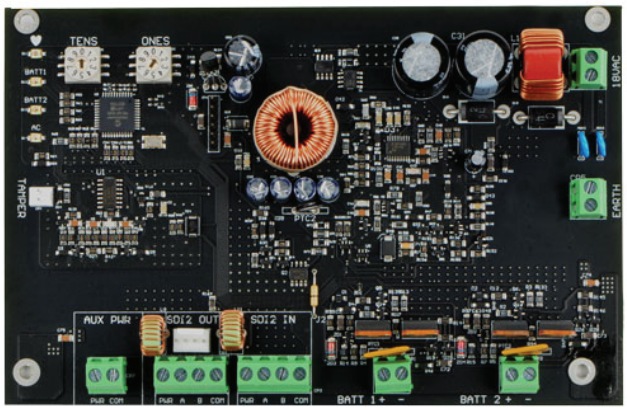


- Provides up to 2A of 12V standby current for Fire or Burglar Applications (4A of Burglary alarm current)
- Supervises up to two 12v 7-18Ah batteries independently for up to 36AH of capacity
- Provides up to 80 hours of standby time
- Uses the Bosch standard TR1850 plug-in transformer
- Easy to read rotary switch addressing

The B520 Auxiliary Power Supply Module is a fully supervised, addressable SDI2 bus device that provides an integrated auxiliary power supply solution for Bosch control panels.

## System overview

The B520 Auxiliary Power Supply Module is an auxiliary power supply expansion device that connects to compatible control panels through the SDI2 bus. This module is supervised and communicates back to the control panel all status changes.
Industrial, commercial, and institutional facilities are typical installations for the B520 module. The B520 rotary switches allow for ease of use in device addressing. The SDI2 Out terminals provide auxiliary power for SDI2 expansion devices such as keypads. The AUX PWR terminals provides added auxiliary power capabilities for additional devices such as PIR's.

## Functions

**Supervision Monitoring**
The module monitors and communicates status information over the SDI2 bus for the following:

- Operation (Heartbeat)
- Battery 1 (BATT 1)
- Battery 2 (BATT 2)
- AC input power (AC)
- Battery OK
- Low Battery
- Missing Battery

**Indicators**

- Heartbeat [icon]: Blue LED flashing On and Off when system is operating normally. A steady On or Off LED indicates a system error. Triple flash indicates communication failure.
- BATT 1 LED: Green steady On LED indicates the battery status of BATT 1 is operating normally. Flashing indicates low battery. Triple flash indicates battery charger failure. Off LED indicates a missing battery.
- BATT 2 LED: Green steady On LED indicates the battery status of BATT 2 is operating normally. Flashing indicates low battery. Triple flash indicates battery charger failure. Off LED indicates a missing battery.
- AC LED: Green steady On LED indicates the AC power is operational. A pulsating LED (3 pulses per sec.) occurs when a battery test is being performed. Flashing indicates low or failed AC.

**Battery Charging**
Fully charged batteries, connected to the battery terminals, sustain power to the B520 in the event that the AC power fails.

If AC power fails (is absent, or low) on the B520, the B520 automatically switches from primary power (AC) to secondary power (battery). When AC power is present, the B520 performs periodic battery tests to ensure battery life and usability.

## Certifications and approvals

| Region | |
|---|---|
| US | UL 365 – Police Station Connected Burglar Alarm Units and Systems |
| | UL 609 – Local Burglar Alarm Units and Systems |
| | UL 636 – Holdup Alarm Units and Systems |
| | UL 864 – Control Units and Accessories for Fire Alarm Systems |
| | UL 985 – Household Fire Warning System Units |
| | UL 1023 – Household Burglar Alarm System Units |
| | UL 1076 – Proprietary Burglar Alarm Units and Systems |
| | UL 1610 – Central Station Burglar Alarm Units |
| | FCC Part 15 Class B |
| Canada | CAN/ULC S303 – Local Burglar Alarm Units and Systems |
| | CAN/ULC S304 – Signal Receiving Centre and Premise Alarm Control Units |
| | ULC-ORD C1023 – Household Burglar Alarm System Units |
| | ULC-ORD C1076 – Propriety Burglar Alarm Units and Systems |
| | ICES-003 – Digital Apparatus |

| Region | Certification | |
|---|---|---|
| USA | UL | 20121010-S5579 |
| | CSFM | see our website |

## Installation/configuration notes

### Mounting Considerations

You can mount the B520 Auxiliary Power Supply Module in a variety of enclosures for optimal situations.

Mounting in the D8103 requires the addition on the B12 Mounting plate.

The D8103 enclosure supports up to two 12V, 18Ah batteries. The B10 supports either one 12V, 18Ah or up to two 12V, 7Ah batteries.

### Wiring Considerations

The B520 connects to a control panel using the SDI2 IN connections (PWR, A, B, COM). Use 12 AWG to 22 AWG (1.5 mm to 0.6 mm) wires from the power supply to the control panel.

The B520 provides auxiliary power to expansion modules via the SDI2 OUT (PWR, A, B, COM), or AUX Power (AUX PWR) connections using the screw terminal strip, or by using the interconnect wiring connection. Use 12 AWG to 22 AWG (1.5 mm to 0.6 mm) wires from the module to the SDI2 expansion module(s).

## Parts included

| Quantity | Component |
|---|---|
| 1 | B520 Auxiliary Power Supply module |
| 1 | Hardware pack |
| 1 | Literature pack |

### B520 Kit, B10 Enclosure

Kit contents include:

- B520 Aux Power Supply
- TR1850 transformer
- B10 white enclosure

Order number: **B520-B**

### B520 Kit, D8103 Enclosure

Kit contents include:

- B520 Aux Power Supply
- TR1850 transformer
- B12 mounting plate
- D8103 gray, steel enclosure

Order number: **B520-C**

## Technical specifications

### Properties

| | |
|---|---|
| Board Dimensions | 11.43 cm x 17.62 cm x 2.9 cm (4.5 in x 6.94 in x 1.15 in) |
| Maximum Distance – Wire Size | 305 m (1000 ft) - 0.65 mm (22 AWG)<br>305 m (1000 ft) – 2 mm (18 AWG)<br>Unshielded wire only |
| Compatibility | GV4 Series control panels (Up to 8 B520 Auxiliary Power Supply Modules per control panel)<br>D8103 Enclosure<br>B10 Large Control Panel Enclosure<br>B12 Mounting Plate for the D8103 Enclosure<br>D8108A Attack Enclosure<br>D2203 Enclosure<br>BATB-40 Enclosure<br>AE1, AE2 Enclosures<br>D8004 Transformer Enclosure* |
| B501-10 | Interconnect cables (10 per pack) |

*The D8004 Transformer Enclosure is required when the B520 and TR1850 (18 VAC, 50 VA) Transformer are used in UL 864 Fire, or Combination Burg and Fire applications.

### Power Input

| | |
|---|---|
| Transformer Power Supply | TR1850 (18 VAC, 50 VA)<br>TR1850-CA (18 VAC, 50 VA) for Canada |

### Power Output

| | |
|---|---|
| Current Available (Maximum) | 2.0 A SDI2 Out and AUX Power (Combined) (up to 4.0 A of alarm current for Burglar Applications) |
| Current Reserved for Charging Batteries | 150 mA |
| Current Drawn from the Panel | 15 mA |
| Voltage (rated range) | 11.5 to 12.2 VDC (special application) |
| Battery Configuration | Supports two*, separate 12 V sealed lead acid batteries (7-18 Ah) for up to 36 amp.<br><br>*Battery 1 is required for normal operations. Battery 2 is optional. |

### Enclosure Battery Considerations

| | |
|---|---|
| D8103 | Holds up to two 18 Ah, or two 7 Ah batteries |
| B10 | Holds up to one 18 Ah, or two 7 Ah batteries |

### Environmental Considerations

| | |
|---|---|
| Operating Temperature | +32° to +120° F (0° to +49°C) |
| Storage Temperature | -4° to 140° F (-20° to +60° C) |
| Relative Humidity | 5% to 93% at +32° (+90°F) non-condensing |
| Use | Intended for indoor use. |

## Ordering information

**B520 Auxiliary Power Supply Module**
Provides auxiliary power to 12VDC devices or to SDI2 modules.
Order number **B520**

**Accessories**

**B10 Medium Control Panel Enclosure**
White, steel enclosure. Accepts an optional lock and tamper switch. Measures 35.6 cm x 31.8 cm x 7.6 cm (14 in x 12.5 in x 3 in).
Order number **B10**

**D2203 Enclosure**
Gray steel enclosure. Accepts an optional lock and tamper switch. Measures 35.6 cm x 31.8 cm x 7.6 cm (14 in x 12.5 in x 3 in).
Order number **D2203**

**D8103 Enclosure**
Grey steel enclosure measuring 41 cm x 41 cm x 9 cm (16 in. x 16 in. x 3.5 in.).
Order number **D8103**

**D8108A Attack Resistant Enclosure**
Grey steel enclosure measuring 41 cm x 41 cm x 9 cm (16 in. x 16 in. x 3.5 in.). UL Listed. Includes lock and key set. B520, B4512, and B5512 require the B12 mounting plate.
Order number **D8108A**

**AE1 Standard Enclosure (Gray)**
Standard gray enclosure with keyed lock. Measures 35.6 cm x 31.8 cm x 7.6 cm (14 in x 12.5 in x 3 in).
Order number **AE1**

**AE2 Standard Enclosure (Red)**
Standard red enclosure with keyed lock. Measures 35.6 cm x 31.8 cm x 7.6 cm (14 in. x 12.5 in. x 3 in.).
Order number **AE2**

**D8004 Transformer Enclosure**
For applications such as fire alarm that might require a transformer enclosure.
Order number **D8004**

**B12 Mounting Plate for D8103 Enclosure**
Required for mounting select control panels and other devices in D8103, D8108A, D8109, or BATB Battery Box enclosures.
Order number **B12**

**TR1850 Transformer**
For use in North America. Plug-in transformer with input: 120 VAC, 60 Hz, 0.50 A; output 18 VAC, 50 VA output.
Order number **TR1850**

**D101 Lock and Key Set**
Short-body lock set with one key supplied. Uses the D102 (#1358) replacement key.
Order number **D101**

**ICP-EZTS Dual Tamper Switch**
Combination tamper switch with a wire loop for additional tamper outputs.
Order number **ICP-EZTS**

**BATB-40 Battery Box\Enclosure**
The BATB-40 Battery Box holds two dry or wet cell batteries. The box can be used with fire alarm systems or intrusion systems.
Order number **BATB-40**

**B520 Kit, B10 Enclosure**
B520 Auxiliary Power Supply kit. Includes a TR1850 transformer and a B10 White, steel enclosure.
Order number **B520-B**

**B520 Kit, D8103 Enclosure**
B520 Auxiliary Power Supply kit. Includes a TR1850 transformer, a B12 mounting plate, and a D8103 Gray, steel enclosure.
Order number **B520-C**

**Represented by:**

**Americas:**
Bosch Security Systems, Inc.
130 Perinton Parkway
Fairport, New York, 14450, USA
Phone: +1 800 289 0096
Fax: +1 585 223 9180
security.sales@us.bosch.com
www.boschsecurity.us

**Europe, Middle East, Africa:**
Bosch Security Systems B.V.
P.O. Box 80002
5617 BA Eindhoven, The Netherlands
Phone: + 31 40 2577 284
Fax: +31 40 2577 330
emea.securitysystems@bosch.com
www.boschsecurity.com

**Asia-Pacific:**
Robert Bosch (SEA) Pte Ltd, Security Systems
11 Bishan Street 21
Singapore 573943
Phone: +65 6571 2808
Fax: +65 6571 2699
apr.securitysystems@bosch.com
www.boschsecurity.asia

**China:**
Bosch (Shanghai) Security Systems Ltd.
201 Building, No. 333 Fuquan Road North IBP
Changning District, Shanghai
200335 China
Phone +86 21 22181111
Fax: +86 21 22182398
www.boschsecurity.com.cn

**America Latina:**
Robert Bosch Ltda Security Systems Division
Via Anhanguera, Km 98
CEP 13065-900
Campinas, Sao Paulo, Brazil
Phone: +55 19 2103 2860
Fax: +55 19 2103 2862
latam.boschsecurity@bosch.com
www.boschsecurity.com

© Bosch Security Systems 2014 | Data subject to change without notice
2536892171 | en, V6, 04. Nov 2014

**Date: Jun 12, 2018**

REVIEWED BY CONTRACTOR
Kudlik Construction Ltd.
NAME: Sandra Rousseau P.Eng
DATE: Jun 12, 2018

# Transmittal

**Arctic Electrical Nunavut Ltd**
PO Box 1381
Iqaluit, Nu.
X0A 0H0
Phone: 867-975-3494
**From: Lee Pitcher**



SE-02
PO-P18-123

**Project** **Waste Wate Treatment Plant**
**Location** Iqaluit NU
**To** Kudlik Construction
Contact: Sandra Rousseau P.Eng.
srousseau@kudlik.biz

Attached are the following items:

- [x] Drawings
- [ ] Prints
- [ ] Plans
- [x] Specifications
- [ ] Information
- [ ] Submittals

Other:

THESE ARE TRANSMITTED FOR:

- [ ] Prior Approval
- [x] Approval
- [ ] Approval as Submitted
- [ ] Approval as Noted
- [ ] Resubmittal for Approval
- [ ] Corrections
- [ ] Your Use
- [ ] Review and Comment
- [ ] Record

Bids due on:
Other:

| Qty | Type | MFG | Part |
|---|---|---|---|

Section 28 31 01 Fire Alarm System

**Notes:**
Please review the attached approval drawings carefully. Production cannot be scheduled until a signed copy of the final approved drawing are received. Be aware that once drawings are approved, any errors due to incorrect information are the responsibility of the client.

Do not hesitate to contact me if you have any questions or concerns.




C3779

# Job Name: IQALUIT WASTE WATER TREATMENT PLANT

**Prop Number:** **27-218-3016-000**

Customer: ARCTIC ELECTRICAL

PO Number: P18-123

Date: 2018/06/12

Section 28 31 01 Fire Alarm System

Chubb EDWARDS

28 31 01

LIFE SAFETY & INCIDENT MANAGEMENT

# Intelligent Fire Alarm Systems

## iO64, iO1000



FDNY
COA 6227

7165-1657:
0244

S3000

STANTEC PROJECT #: 110126045
SUBMITTAL # ELE-002 Fire Alarm Systems

This review by Stantec is for general conformance with the design concept of Stantec's design of the:
☐ Architectural ☐ Structural ☐ Mechanical ☑ Electrical ☐ Other

component(s) only and does not mean that Stantec has verified or approves the shop drawing(s). The Contractor remains solely responsible for the shop drawing(s) and this review by Stantec does not relieve the Contractor of the Contractor's responsibility for errors or omissions in the shop drawing(s) or for meeting all requirements of the contract documents. This review does not mean that Stantec approves the detailed design inherent in the shop drawing, responsibility for which shall remain with the Contractor submitting same, nor does this review mean that Stantec accepts any deviation of the shop drawing(s) from the contract documents. The Contractor is responsible for confirming all dimensions and correlating them at the job site, for all construction means, methods and techniques, and for coordination of construction work of all trades, including coordination of all shop drawings.

Stantec

☑ REVIEWED
☐ REVIEWED, AS NOTED
☐ REVISE AND RESUBMIT
☐ NOT REVIEWED

DATE June 20, 2018
BY Chester Martinez, E.I.T.

## Overview

EDWARDS brand intelligent life safety systems offer the power of high-end intelligent processing in configurations that deliver uncomplicated solutions for small to mid-sized applications. With intelligent detection, electronic addressing, automatic device mapping, optional Ethernet® connectivity, and a full line of easily-configured option cards and modules, these flexible systems offer versatility that benefits building owners and contractors alike.

***The iO64*** provides one Class A or Class B intelligent device loop that supports up to 64 device addresses, and two Class B Notification Appliance Circuits (NACs). Optional Class A device wiring is available with the use of a module.

***The iO1000*** provides one Class A or Class B intelligent device loop that supports up to 250 device addresses. Loop controller modules may be added in combination to expand total system capacity in 250-point increments to up to 1,000 device addresses. The iO1000 panel includes four NACs that may be wired for either Class A or Class B operation.

***The RZI16-2*** module adds even more capacity to iO installations by adding up to 16 conventional device circuits and two additional notification appliance circuits. This makes them an ideal retrofit solution that can accommodate new intelligent detectors, as well as existing conventional devices.

iO Series supports a wide range of high-end features, including:

- Signature Series intelligent modules, detectors, and bases
- R-Series remote annunciators
- SIGA-REL Releasing Modules
- Fully integrated CO detection using Signature Series detectors with or without audible signaling

## Features

- Auto-programming speeds installation time
- Supports Signature Series intelligent modules and detectors
- Combines the Signature intelligent releasing module with Signature multisensor detectors for reliable fire suppression
- Form C contacts for alarm and trouble, Form A for supervisory
- Electronic addressing with automatic device mapping
- Optional Ethernet port for diagnostics, programming and a variety of system reports
- Two programmable switches with LEDs and custom labeling
- Supports Genesis horn silence over two wires, and UL 1971-compliant strobe synchronization
- Class B or Class A wiring
- Ground fault detection by module
- Supports up to eight serial annunciators, (LCD, LED-only, and graphic interface)
- Can use existing wiring for most retrofit applications
- Upload/download remotely or locally
- Two-level maintenance alert reporting
- Pre-alarm and alarm verification by point
- Adjustable detector sensitivity
- 4 x 20 character backlit LCD display
- Optional earthquake hardening: seismic Importance Factor 1.5
- Standalone operation
- Transmission test frequency by hour

# Application

EDWARDS iO Series life safety systems are powerful intelligent solutions for small to mid-sized buildings. Advanced intelligent technology delivers the benefits of flexible system installation, while clean and easy-to-operate user interfaces make panel operation and system maintenance quick and intuitive.

### The smart choice

Signature Series electronic addressing eliminates the tedium of setting dipswitches, and automatic device mapping ensures that each device resides on the system at its correct location. Meanwhile, innovative programming allows the designer to customize the system to precisely suit the needs of the building owner.

### Reliability you can count on

The inherent fault-tolerant characteristics of Analog/Addressable Technology boosts the reliability of EDWARDS fire alarm systems. When combined with iO Series smoke and heat detectors, these systems deliver a level of dependability not previously available for small to mid-sized applications. All EDWARDS systems are built to exacting reliability benchmarks and meet international standards for quality, in addition to agency listings for dependability.

### Clear-cut remote annunciation

Remote annunciation is a strong suit of the iO Series fire alarm systems. Up to eight annunciators can be installed on a single system. Compatible annunciators include a range of LED and LCD models that provide zone or point annunciation, as well as common control capabilities. iO control panels also supports graphic annunciation with optional RA Graphic Annunciator interface modules. Each interface provides common control and 32 LEDs.

28 31 01

### Flexibility built right in

Two fully-programmable front panel switch/LED combinations provide an added measure of flexibility. Their slide-in labels take the mystery out of custom applications, and present a clean finished appearance.

### Perfect for retrofits

EDWARDS iO Series control panels are particularly well-suited to retrofit applications. All connections are made over standard wiring – no shielded cable required. This means that in most situations existing wiring can be used to upgrade a legacy control panel to iO technology without the expense or disruption of rewiring the entire building. iO control panels also support the ingenious RZI16-2 Zone Module, which adds up to 16 conventional circuits and two NACs. This combination easily accommodates new intelligent detection alongside existing conventional circuits, making it an superior solution in the retrofit market.

### Signals with a difference

iO system NACs are configurable to fully support the advanced signaling technology of EDWARDS Genesis and Enhanced Integrity notification appliances. These devices offer precision synchronization of strobes to UL 1971 standards. For Genesis devices, enabling this feature allows horns to be silenced while strobes on the same two-wire circuit continue to flash until the panel is reset.

### A complete line of accessories

iO Series life safety systems are supported by a complete line of analog/addressable detectors, modules and related equipment. Consult the Ordering Information section for details.

# Programming and remote diagnostics

EDWARDS iO Series life safety systems are simple to set up, yet offer advanced programming features that put these small building panels into a class of their own. The auto programming feature quickly gets the panel operational using factory default settings. Basic zone and point settings can be programmed through the front panel interface, so the system is up and running in no time.

For more advanced system configuration and correlation groups programming, iO Series systems interface to a PC running compatible iO-CU software. This option offers full system configuration in the familiar Windows® operating environment. Connection is made to a laptop through the panel's optional RS-232 communications port, which can also be used to connect a system printer.

Among the many innovative features of iO Series control panels is the optional network card. This module provides a standard 10/100 Base T Ethernet® network connection that permits access to the control panel from any remote location with the correct communications protocols. The connection can be used to download to the panel from the iO-CU, or upload and view system reports using the iO-CU.

Available system reports include:

- Correlation groups
- Device maintenance
- Internal status
- System status
- Dialer
- Device details
- History
- System configuration
- Walk test
- CO runtime

# Dimensions

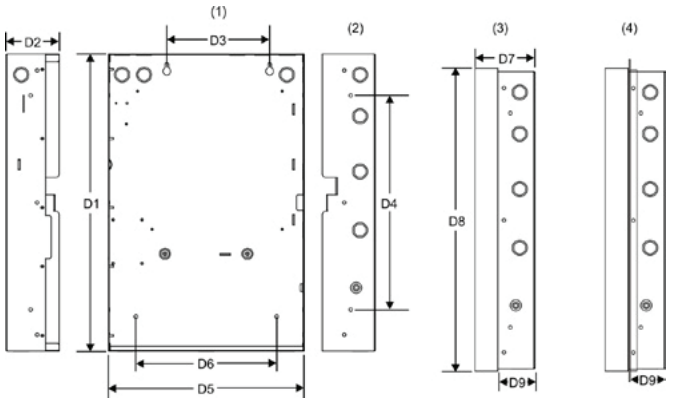


(1) Surface Mounting Holes
(2) Semi-flush mounting Holes
(3) Backbox with Door Attached
(4) Backbox with door and trim kit attached.

**Panel dimensions, in (cm)**

| Model | D1* | D2 | D3 | D4 | D5* | D6 | D7 | D8 | D9 |
|---|---|---|---|---|---|---|---|---|---|
| iO1000 | 28.0 (71.1) | 3.85 (9.8) | 9.0 (22.8) | 22.0 (55.8) | 15.75 (40.0) | 10.25 (26.0) | 4.4 (11.1) | 28.2 (71.6) | 2.7 (6.8) |
| iO64 | 21.5 (54.6) | 3.85 (9.8) | 7.5 (19.0) | 15.5 (39.4) | 14.25 (36.2) | 10.25 (26.0) | 4.5 (11.4) | 21.7 (55.1) | 2.7 (6.8) |

** Add 1-1/2 in. (3.81 cm) to D1 and D5 dimensions for trim kit. The trim kit provides 0.75 inches (1.9 cm) of trim to the top, bottom, and sides of the backbox.*

# System Layout

28 31 01

## iO1000

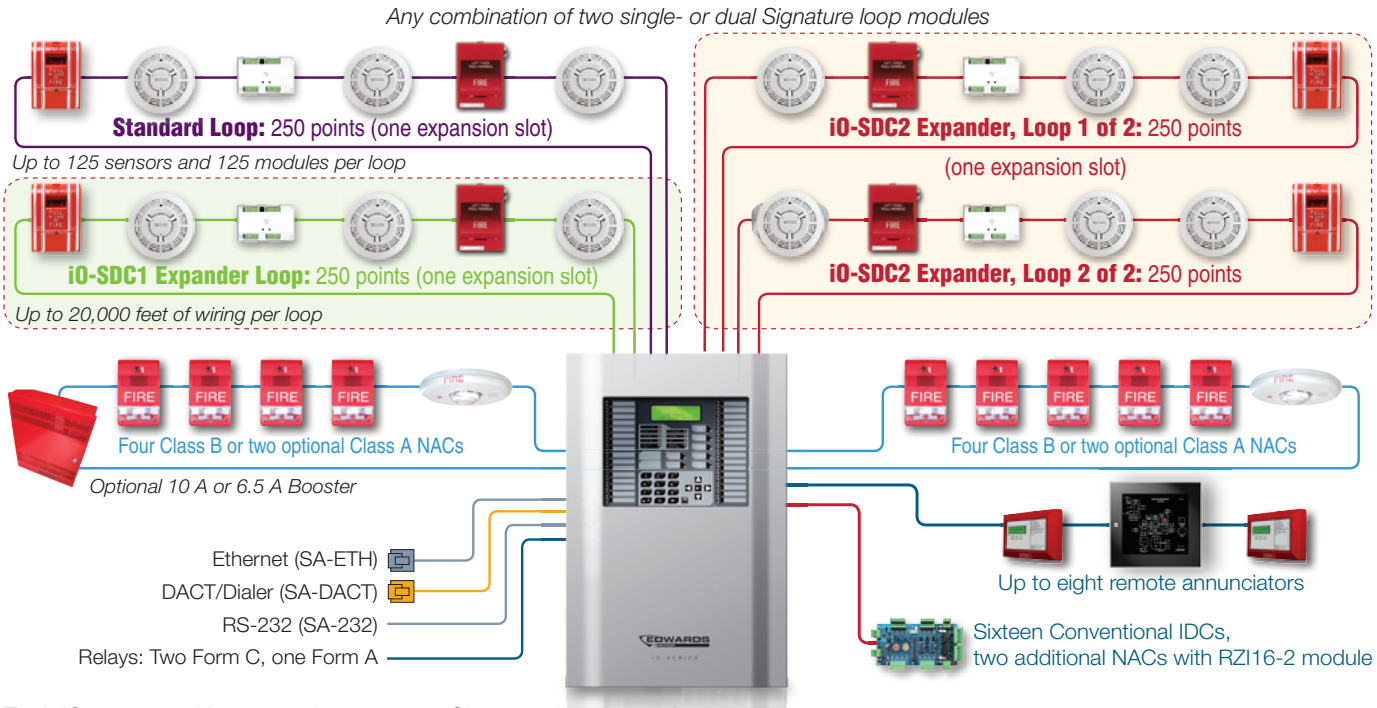


Each iO1000 panel has room for up to two Signature loop controller modules in any combination of single or dual 250-device loops. iO1000 loops support 125 detectors and 125 modules.

## iO64

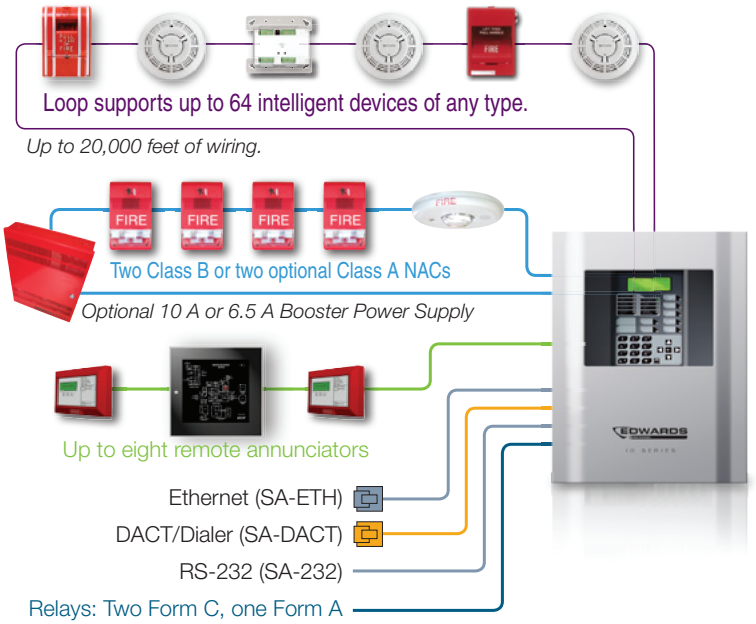


Each iO64 panel ships with one Signature loop controller that supports 64 devices of any type. This panel's device capacity cannot be expanded.

## Panel Layout

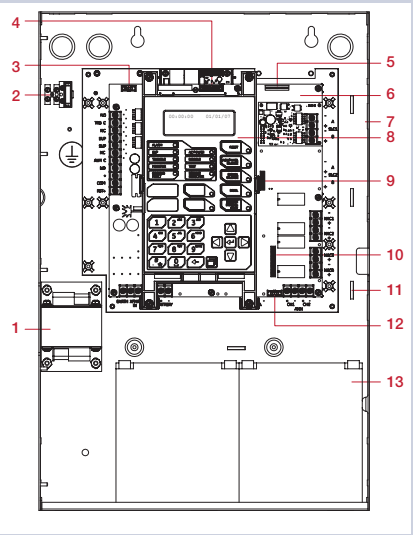


1 Transformer
2 Main AC wiring block & fuse holder
3 RS-232 card connector (J3)
4 Dialer card connection (J8)
5 Ethernet card connector (J1)
6 Main circuit board
7 Panel backbox enclosure
8 Operator interface
9 SLC card connector (J7)
10 Class A card connector (J2)
11 Tie wrap mounts
12 LED expander connector (J6)
13 Standby batteries

28 31 01

## Signature device loop

The system provides one Signature device loop circuit with a total capacity of 125 detectors and 125 module addresses. The loop circuit is supervised for opens, shorts, and grounds.

| Circuit specifications | iO1000 | iO64 |
|---|---|---|
| Device loops | One Class B or A loop, supporting 125 detectors and 125 modules. Expandable to four loops. | One Class B or A loop, supporting 64 devices of any kind. |
| Communication line voltage | Maximum 20 V peak-to-peak | |
| Circuit current | 0.5 A max | |
| Circuit impedance | 66Ω total, 0.5 µF, max | |
| Isolators | 64 maximum | |
| Signal Synchronization | Supported on a system-wide basis (all device loops) when using a SIGA-CC1S or SIGA-MCC1S module and Genesis or Enhanced Integrity notification appliances. | |

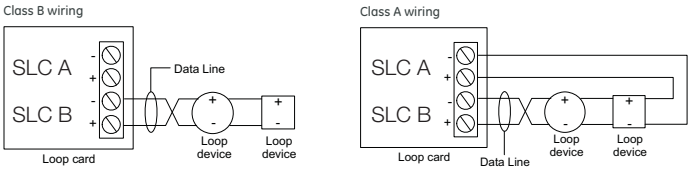


## Notification appliance circuits (TB2)

iO1000 control panels come equipped with four notification appliance circuits. iO64 control panels come with two NACs. Each circuit can be individually configured for continuous, temporal, synchronized, and coded output.

| Specifications | iO1000 | iO64 |
|---|---|---|
| Circuit Type | 4 Class B or 2 Class A | 2 Class B or 2 Class A with SA-CLA module |
| Voltage | 24 VFWR | |
| Current | 6.0 A total, 2.5 A max. per circuit at 120/230 VAC 60 Hz. 5.0 A total, 2.5 A max. per circuit at 230 VAC 50 Hz. | 3.75 A total, 2.5 A max. per circuit at 120/230 VAC 60 Hz. 3.0 A total, 2.5 A max. per circuit at 230 VAC 50 Hz. |
| Impedance | 26 Ω total, 0.35 µF max | |
| EOLR | 15 K Ω, ½ W | |
| Synchronization | Supported system-wide | |

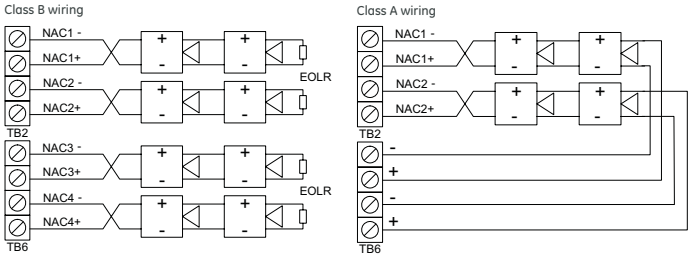


Marking indicates output signal polarity when the circuit is active. Polarity reverses when the circuit is not active. Wire notification appliances accordingly. Notification appliance polarity shown in active state.

## Auxiliary & smoke power outputs (TB3)

The control panel provides two auxiliary power outputs that can be used for powering ancillary equipment such as remote annunciators and two wire smoke detectors. Aux 2 can be software selected to operate continuously. The circuit is supervised for shorts and grounds.

| Circuit specifications | |
|---|---|
| Circuit voltage range | 21.9 to 28.3 V |
| Resettable circuit (Aux power 2) | 24 VDC nominal at 500 mA |
| Continuous circuit (Aux power 1) | 24 VDC nominal at 500 mA. Use this circuit for powering two-wire smoke detectors. |

Note: Any current above 0.5 amp connected to both Aux 1 and 2 will reduce the total available NAC power by that amount.

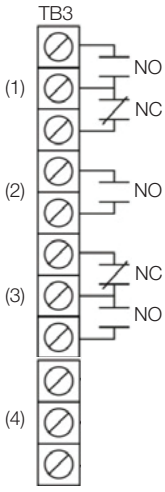


(1) Trouble
(2) Supervisory
(3) Alarm
(4) Smoke/Aux

## Alarm, trouble, and supervisory relay (TB3)

The trouble relay is normally-open, held closed, and opens on any trouble event or when the panel is de-energized. The supervisory relay is normally-open, and closes on any supervisory event. The alarm relay changes over on any alarm event.

### Relay specifications

| | Alarm | Trouble | Supervisory |
|---|---|---|---|
| Type | Form C | | Form A |
| Voltage | 24 VDC at 1 A resistive | 24 VDC at 1 A resistive | |

Relay circuits can only be connected to power-limited sources.

## Annunciator loop (TB4)

The control panel provides a connection for up to eight serially driven and supervised remote annunciators.

### Circuit specifications

| | |
|---|---|
| Device loops | Class B (Style Y) or Class A (Style Z) |
| Circuit voltage | 2.55 V |
| Circuit current | 30 mA max |
| Circuit impedance | Up to 8 annunciators or 4000 feet |

Class B

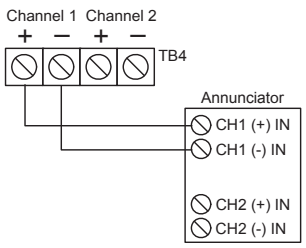


Class A

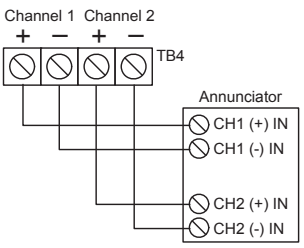

# Option Cards

28 31 01

EDWARDS iO Series panels are supported by a complete line of modules and related equipment that enhance performance and extend system capabilities. Option cards plug directly into the control panel main circuit board or are connected to it with a ribbon cable. After installation, terminals remain accessible. The cabinet provides ample room for wire routing, keeping wiring neat at all times.

## Single and Dual Loop Controller Cards

The iO-SDC1 is a single loop controller card that can be used with the iO64 as a replacement for the standard 64-point loop, or with the iO1000 as a 250-point expansion module.

The iO-SDC2 is a 500-point dual loop controller card for the iO1000 that provides two SLC circuits, each with 125 detector addresses and 125 module addresses.

| Specifications | iO-SDC1 | iO-SDC2 |
|---|---|---|
| Device Addresses | iO1000: one loop, 250 device addresses<br>iO64: 64 addresses | iO1000: two loops, 500 device addresses |
| Wiring | Class B or Class A | |
| Operating Voltage | 24 VDC | |
| Operating Current (fully loaded loop) | Standby: 55 mA<br>Alarm: 80 mA | Standby: 45 mA<br>Alarm: 70 mA |
| *Note: These ratings do not include the use of two-wire smoke modules.* | | |
| Communication Line Voltage | Max. 20.6 V peak-to-peak | |
| Terminal Rating | 12 to 18 AWG (0.75 to 2.5 mm$^2$) | |
| Circuit Current | 0.5 A max. | |
| Max total loop resistance | 66 Ω | |
| Max total loop capacitance | 0.5 µF | |
| Isolators | 64 isolators maximum per loop (total both isolator bases and modules) | |
| Ground Fault Impedance | 0 to 5 kΩ | |
| Operating Environment | 32 to 120°F (0 to 49°C)<br>0 to 93% noncondensing at 90°F (32°C) | |

## SA-ETH Ethernet Interface Card

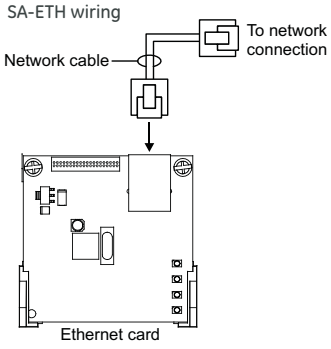


The SA-ETH card provides a standard 10/100 Base T Ethernet network connection for connecting to an intranet, a local network, or the Internet. The card can be used to download configuration programming from the iO-CU to the panel.

The Ethernet card is installed on the plastic assembly and connects to the main circuit board via a ribbon cable.

| SA-ETH specifications | |
|---|---|
| Ethernet | 10/100 Base T |
| Operating environment | |
| Temperature | 32 to 120°F (0 to 49°C) |
| Humidity | 0 to 93% RH, noncondensing at 90°F (32°C) |

## RZI16-2 Remote Zone Interface Module

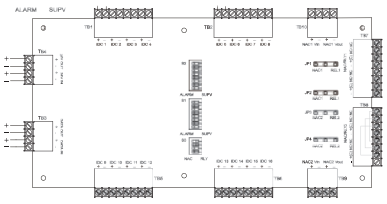

The RZI16-2 Addressable Remote Zone Interface Module is an addressable device that provides connections for sixteen Class B Initiating Device Circuits and two Class B Supervised Output Circuits. The inputs and outputs can be configured individually for several device types.

It requires 18 consecutive addresses on the Signaling Line Circuit (SLC). Addresses are assigned electronically. There are no address switches to set.

The RZI16-2 incorporates two 8-segment DIP switches that are used to select the Alarm or Supervisory default device type for each of the 16 IDC circuits. The module also includes one 4-segment DIP switch used to select the default Relay or NAC output device type. Device types other than the default are accomplished through programming.

| RZI16-2 Specifications | |
|---|---|
| Voltage | |
| 24V/Aux nominal: | 24 VDC |
| Supervisory current: | 250 mA at 24 VDC nominal |
| Alarm Current | 1000 mA |
| 24V/Aux minimum: | 18.4 VDC |
| 24V/Aux maximum: | 26.4 VDC |
| NAC1, NAC2 nominal: | 24 VDC |
| Current | |
| Standby current for 4.7 k EOL (U.S.) | 4.8 mA/ circuit |
| Standby current for 3.9 k EOL (Canada) | 5.7 mA/ circuit |
| Alarm current at nominal voltage | 31.1 mA/ circuit |
| Relay outputs | |
| Quantity | 2 |
| Type Rating (pilot duty) | Programmable 24 VDC at 2.5 A |
| Input circuit wiring resistance | 25 Ω per wire |
| Initiating device circuits | |
| Quantity | 16 |
| EOL resistor | 4.7 kΩ (U.S.); 3.9 kΩ Canada |
| Zone voltage | 22.78 V for 4.7 kΩ (U.S.)<br>22.08 V for 3.9 kΩ (Canada) |
| Alarm current | 31.1 mA/ channel at nominal voltage |
| Alarm impedance range | < 680 Ω |
| Trouble impedance range | > 5.55 kΩ |
| Supervised output circuits | |
| EOL resistor | 15 kΩ |
| Quantity | 2 |
| Short circuit detection | < 2.6 kΩ |
| Open circuit detection | > 61.9 kΩ |
| Contact ratings | 24 VDC at 2.5 A (5 A for two NACs) |
| Compatible cabinets | MFC(A), iO1000, APS |

## SA-DACT Dialer

The SA-DACT provides communications between the control panel and the central station over a telephone line system. It transmits system status changes (events) to a compatible digital alarm communicator receiver over the public switched telephone network. The dialer is capable of single, dual, or split reporting of events to two different account and telephone numbers. The modem feature of the SA-DACT can also be used for uploading and downloading panel configuration, history, and current status to a PC running the iO-CU.

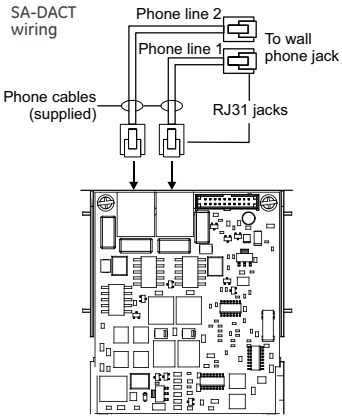


The dialer phone lines connect to connectors on the dialer's main circuit board. Phone line 1 connects to connector J4 and phone line 2 connects to connector J1.

The SA-DACT queues messages and transmits them based on priority (alarm, supervisory, trouble, and monitor). Activations are transmitted before restorations.

The SA-DACT is installed on the plastic assembly and connects to the main circuit board via a ribbon cable.

| SA-DACT specifications | |
|---|---|
| Phone line type | One or two loop-start lines on a public, switched network |
| Phone line connector | RJ-31/38X (C31/38X) |
| Communication formats | Contact ID (SIA DC-05) |
| Operating environment | |
| Temperature | 32 to 120°F (0 to 49°C) |
| Humidity | 0 to 93% RH, noncondensing at 90°F (32°C) |

| Compatible DACRs | | |
|---|---|---|
| **Receiver** | **Models** | **Formats** |
| Ademco | 685 | Contact ID |
| FBII | CP220 | Contact ID |
| Osborne-Hoffman | OH 2000 | Contact ID |
| Bosch | D6600 | Contact ID |
| Silent Knight | 9800 | Contact ID |
| Sur-Gard | SG-MLR1, MLR2 | Contact ID |

## SA-232 RS-232 interface

The SA-232 card provides an RS-232 interface with iO panels. It can be used for connecting a printer to the control panel to print system events. The card also can be used for connecting a computer to download a configuration program from the iO-CU to the control panel.

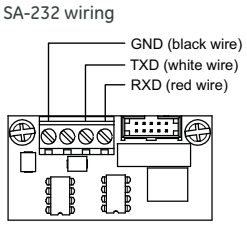


The RS-232 card is installed on the plastic assembly and connects to the main circuit board via a ribbon cable.

| SA-232 specifications | |
|---|---|
| Operating voltage | Standard EIA-232 |
| Terminal rating | 12 to18 AWG (0.75 to 2.5 sq mm) |
| Operating environment | |
| Temperature | 32 to 120°F (0 to 49°C) |
| Humidity | 0 to 93% RH, noncondensing at 90°F (32°C) |

## SA-CLA Class A Module (iO64 only)

The SA-CLA card provides Class A capability for NAC wiring. Its terminal block provides the wiring connection for NAC return wiring. The card is required for annunciator Class A wiring even though this wiring does not return to the SA-CLA card. The SA-CLA is compatible with iO64 control panels only. iO1000 panels are Class A Ready. The SA-CLA is installed directly to the control panel circuit board using its plastic standoffs and plug connection.

| SA-CLA specifications | |
|---|---|
| Operating voltage | 24 VFWR |
| Operating current | 3.75 A FWR total at 120/230 VAC 60 Hz<br>3.0 A FWR total at 230 VAC 50 Hz<br>2.5 A max per circuit |
| Circuit impedance | 26 ohms, 0.35uF |
| Terminal rating | 12 to18 AWG (0.75 to 2.5 sq mm) |
| Operating environment | |
| Temperature | 32 to 120°F (0 to 49°C) |
| Humidity | 0 to 93% RH, noncondensing at 90°F (32°C) |

## D16L-iO LED Display Expander (iO1000 only)

The D16L-iO LED Display Expanders provide LED annunciation for up to 16 zones. It provides two LEDs for each zone. Two D16L-iO LED display expanders can be installed in each iO1000 panel.

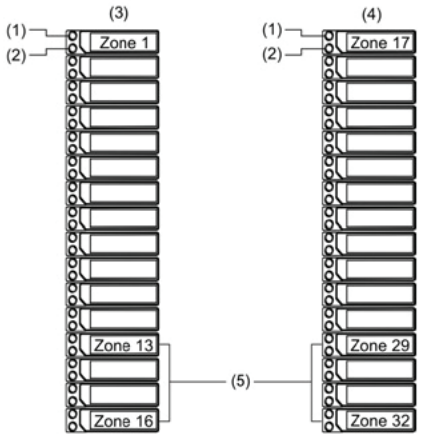


(1) LED 1
(2) LED 2
(3) LED Expander 1
(4) LED Expander 2
(5) Alarm/non-alarm and trouble zone LEDs

# Specifications

| | iO64 | iO1000 |
|---|---|---|
| Device loops | 1 loop Class B or Class A (Styles 4, 6, 7) supporting up to 64 device addresses (any combination of detectors and modules)<br>Maximum T-taps: 63<br>(each device can be on its own branch) | 1 loop, expandable to 4, Class A or B (Styles 4, 6, 7), each loop supporting up to 250 device addresses (125 detectors and 125 modules max.). Addresses 1 to 125 are for detectors and addresses 126 to 250 are for modules<br>Maximum T-taps/loop: 124 |
| Notification appliance circuits | 2 Class B (Style Y), Class A (Style Z) optional<br>3.75 A FWR total at 120/230 VAC 60 Hz<br>3.0 A FWR total at 230 VAC 50 Hz<br>2.5 A FWR each max. per circuit | 4 Class B (Style Y) or 2 Class A (Style Z)<br>6.0 A FWR total at 120/230 VAC 60 Hz<br>5.0 A FWR total at 230 VAC 50 Hz<br>2.5 A FWR each max. per circuit |
| Primary power | 120 VAC, 60 Hz, 1.3 A max.<br>230 VAC, 50-60 Hz, 0.62 A max. | 120 VAC, 60 Hz, 2.0 A max.<br>230 VAC, 50-60 Hz, 0.97 A max. |
| Base panel current standby | 155 mA | 172 mA |
| Base panel current alarm | 204 mA | 267 mA |
| Input zones | 16 max. | 32 max. |
| Remote annunciator | 8 drops max., RS-485 Class B, Class A is optional<br>Data line length: 4,000 ft. (1,219 m) | 8 drops max., RS-485 Class A or B<br>Data line length: 4,000 ft. (1,219 m) |
| Operating voltage | 24 VDC panel | |
| Auxiliary power output circuit | Aux power 1: 500 mA, 24 VDC<br>Aux power 2: 500 mA, 24 VDC (1 A possible if you reduce total available NAC power by 500 mA)<br>Output: 28.3 to 21.9 VDC, special application<br>*Note: For a list of compatible devices, see the iO64 and iO1000 Series Compatibility List (P/N 3102353-EN)* | |
| Loop circuit | Maximum loop resistance: 66 Ω<br>Maximum loop capacitance: 0.5 µF<br>Communication line voltage: Maximum 20.6 V peak-to-peak<br>Operating current (fully loaded loop) Stand by: 55 mA/45 mA<br>Alarm: 125 mA/115 mA (not including two-wire smoke modules)<br>Circuit current: 0.5 A max. Style 4, 6, and 7 wiring<br>Max. resistance between isolators: Limited only by overall wire run lengths<br>64 isolators maximum per loop (total both isolator bases and modules) | |
| Batteries | Type: Sealed lead acid<br>Voltage: 24 VDC<br>Charging current: 2.47 A max. Amp hour capacity: 26 Ah<br>Standby operation: 24 hour or 60 hour<br>Placement: Up to two 10 Ah batteries will fit in the iO64 control panel cabinet and two 18 Ah batteries will fit in the iO1000 control panel cabinet. If larger batteries are required, use an EDWARDS battery cabinet. | |
| SA-DACT dialer | Phone line type: One or two loop-start lines on a public, switched network<br>Phone line connector: RJ-31/38X (C31/38X)<br>Communication formats: Contact ID (SIA DC-05)<br>Operating current Standby/Alarm: 41 mA Max.: 100 mA<br>FCC registration number: GESAL01BSADACT<br>Industry Canada Registration number: 3944A-SADACT<br>Ringer equivalence number: 0.1B | |
| Ground fault impedance | 0 to 5 kΩ | |
| Alarm contact | Form C N.O. 24 VDC at 1 A (resistive load) | |
| Trouble contact | Form C 24 VDC at 1 A (resistive load) | |
| Supervisory contact | Form A N.O. 24 VDC at 1 A (resistive load) | |
| Environmental | Temperature: 0 to 49°C (32 to 120°F) Relative humidity: 0 to 93% noncondensing | |
| Terminal rating | All terminals rated for 12 to 18 AWG (0.75 to 2.5 $mm^2$) | |

EDWARDS
United Technologies
LIFE SAFETY & INCIDENT MANAGEMENT

Contact us...

Email: edwards.fire@fs.utc.com
Web: *Edwards-fire.com*

EDWARDS is a UTC brand.
1016 Corporate Park Drive
Mebane, NC 27302

© 2016 United Technologies Corporation.
All rights reserved.

# Ordering Information

28 31 01

| Part | Description |
|---|---|
| **iO1000 Fire Alarm Systems** | |
| IO1000G | Four loop system with one 250-point loop installed. 110v, gray door. |
| IO1000G-2 | Four loop system with one 250-point loop installed. 230v, gray door. |
| IO1000G-2-PG | Four loop system with one 250-point loop installed. 230v, gray door, Portuguese. |
| IO1000G-2-SP | Four loop system with one 250-point loop installed. 230v, gray door, Spanish. |
| IO1000G-CA | Four loop system, one 250-point loop installed. 110v, gray door, LED strips, Canada. |
| IO1000GD | Four loop system, one 250-point loop installed. 110v, gray door, with dialer. |
| IO1000G-F | Four loop system, one 250-point loop. 110v, gray door, LED strips, French Canada. |
| IO1000G-PG | Four loop system with one 250-point loop installed. 110v, gray door, Portuguese. |
| IO1000G-SP | Four loop system with one 250-point loop installed. 110v, gray door, Spanish. |
| IO1000R | Four loop system with one 250-point loop installed. 110v, red door. |
| IO1000R-2 | Four loop system with one 250-point loop installed. 230v, red door. |
| IO1000RD | Four loop system, one 250-point loop installed. 110v, red door, with dialer. |
| SA-TRIM2 | iO1000 Flush mount trim, black. |
| **iO64 Fire Alarm Systems** | |
| IO64G | One loop system with one 64-point loop installed. 110v, gray door. |
| IO64G-2 | One loop system with one 64-point loop installed. 230v, gray door. |
| IO64G-2-PG | One loop system with one 64-point loop installed. 230v, gray door, Portuguese. |
| IO64G-2-SP | One loop system with one 64-point loop installed. 230v, gray door, Spanish. |
| IO64GD | One loop system, one 64-point loop installed. 110v, gray door, with dialer. |
| IO64GL | One loop system, one 64-point loop installed. 110v, gray door, English Canada. |
| IO64GL-F | One loop system, one 64-point loop installed. 110v, gray door, French Canada. |
| IO64G-PG | One loop system with one 64-point loop installed. 110v, gray door, Portuguese. |
| IO64G-SP | One loop system with one 64-point loop installed. 110v, gray door, Spanish. |
| IO64R | One loop system with one 64-point loop installed. 110v, red door. |
| IO64R-2 | One loop system with one 64-point loop installed. 230v, red door. |
| IO64RD | One loop system, one 64-point loop installed. 110v, red door, with dialer. |
| SA-TRIM1 | iO64 Flush mount trim, black |
| **Option Cards** | |
| iO-SDC1 | Expansion module, one 250-device loop. |
| iO-SDC2 | Expansion module, two 250-device loops, 500 devices total. For iO1000 only. |
| RZI16-2 | Remote Zone Interface Module. 16 Class B IDCs, 2 Class B Output. Includes bracket. |
| SA-DACT | Dual Line Dialer/Modem, supports Contact ID, mounts in cabinet on base plate. |
| SA-232 | RS-232 Serial Port for connection to printers & computers, mounts in cabinet. |
| SA-ETH | Ethernet Port, Slave, mounts in cabinet on base plate. |
| SA-CLA | Class A adapter module. Provides Class A capacity on NACs. Mounts in cabinet on main board. iO64 systems only. |
| D16L-iO-2 | LED Annunciator module, 16 X 2-LED zones (4 programmable for sup). Mounts in cabinet to right of LCD display for zones 17-32. For iO1000 only. |
| D16L-iO-1 | LED Annunciator module, 16 X 2-LED zones (4 programmable for sup). Mounts in cabinet to left of LCD display for zones 1-16. For iO1000 only. |
| D8RY-iO-2 | ***Canada only:*** LED Annunciator module, two LEDs per zone, 16 zones (4 alarm only, 8 supervisory only, 4 alarm or supervisory). Mounts in cabinet. For iO1000 only. |
| D8RY-iO-1 | ***Canada only:*** LED Annunciator module, two LEDs per zone, 16 zones (4 alarm only, 8 supervisory only, 4 alarm or supervisory). Mounts in cabinet. For iO1000 only. |
| **Accessories** | |
| CTM | City Tie Module. 2-gang. Connection to a local energy fire alarm box. |
| MFC-A | Multifunction Fire Cabinet, 8" x 14" x 3.5" - red. |
| SIGA-REL | Releasing Module |
| PT-1S | System Printer |
| BC-1 | Battery Cabinet. 14.0" x 18.25" x 7.25". Holds two 12V24A batteries. |
| BC-1R | Battery Cabinet - Red. 14.0" x 18.25" x 7.25". Holds two 12V24A batteries. |
| BC-1EQ | Seismic hardening Kit for iO series panels. Includes battery hardening for BC-1 enclosure and components to harden panel internal components. |
| **Programming Tools** | |
| iO-CU | IO Series configuration and diagnostics utility. |
| 260097 | RS232 cable, 4 conductor, DB9 PC interface |

EDWARDS
United Technologies
LIFE SAFETY & INCIDENT MANAGEMENT

28 31 01

# Intelligent Heat Detector

## SIGA-HRD



S853

## Overview

The SIGA-HRD is an intelligent fixed temperature/rate-of-rise fire detector. It monitors the temperature of the surrounding air and analyzes the data from the sensor to determine whether to initiate an alarm. The rate-of-rise heat function quickly detects a fast, flaming fire. The fixed-temperature heat function detects fire when the air temperature near the detector exceeds the alarm point.

The SIGA-HRD brings advanced sensing technology to a practical design that increases efficiency, saves installation time, cuts costs, and extends property protection capabilities. Continuous self-diagnostics ensures reliability over the long-haul, while the latest thermister technology makes these detectors ideal whereever dependable heat detection is required.

## Standard Features

***Note:*** *Some features described here may not be supported by all control systems. Check your control panel's Installation and Operation Guide for details.*

- Next Generation Heat Sensing Technology
- 15 °F (9 °C) per minute rate-of-rise alarm point
- 135 °F (57 °C) fixed temperature alarm point
- Uses existing wiring
- Automatic device mapping
- Sensor Markings Provide Easy Testing Identification
- Up To 250 Total Signature Devices Per Loop
- Non-volatile memory
- Electronic addressing
- Bicolor (green/red) status LED
- Standard, relay, fault isolator, and audible mounting bases
- 50 foot (15.2 meter) spacing

Provide detectors approved for the location in which they are installed as per the electrical drawings.

STANTEC PROJECT #: 110126045

SUBMITTAL # ELE-002 Fire Alarm Systems

This review by Stantec is for general conformance with the design concept of Stantec's design of the:

☐ Architectural ☐ Structural ☐ Mechanical ☑ Electrical ☐ Other

component(s) only and does not mean that Stantec has verified or approves the shop drawing(s). The Contractor remains solely responsible for the shop drawing(s) and this review by Stantec does not relieve the Contractor of the Contractor's responsibility for errors or omissions in the shop drawing(s) or for meeting all requirements of the contract documents. This review does not mean that Stantec approves the detailed design inherent in the shop drawing, responsibility for which shall remain with the Contractor submitting same, nor does this review mean that Stantec accepts any deviation of the shop drawing(s) from the contract documents. The Contractor is responsible for confirming all dimensions and correlating them at the job site, for all construction means, methods and techniques, and for coordination of construction work of all trades, including coordination of all shop drawings.

Stantec

☐ REVIEWED
☑ REVIEWED, AS NOTED
☐ REVISE AND RESUBMIT
☐ NOT REVIEWED

DATE June 20, 2018

BY Chester Martinez, E.I.T.

## Application

The SIGA-HRD combination fixed temperature/rate-of-rise heat detector provides a 15 °F (9 °C) per minute rate-of-rise heat sensor for the detection of fast-developing fires, as well as a 135°F (57°C) fixed temperature sensor for slow building-fires. The heat sensor monitors the temperature of the air and determines whether an alarm should be initiated.

## Compatibility

The SIGA-HRD detector is compatible only with the Signature Loop Controller.

## Installation

Signature Series detectors mount to North American 1-gang boxes, 3-1/2 inch or 4 inch octagon boxes, and to 4 inch square electrical boxes 1-1/2 inches (38 mm) deep. They mount to European BESA and 1-gang boxes with 60.3 mm fixing centers. See mounting base installation and wiring for more information.

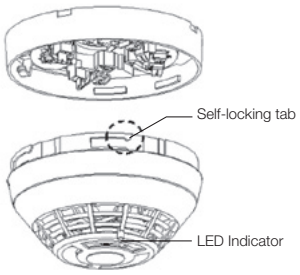


## Sensing and reporting technology

The microprocessor in each detector provides additional benefits - Self-diagnostics and History Log, Automatic Device Mapping, and Fast, Stable Communication.

**Self-diagnostics and History Log** - Each Signature Series detector constantly runs self-checks to provide important maintenance information. The results of the self-check are automatically updated and permanently stored in the detector's non-volatile memory.

**Automatic Device Mapping** - The loop controller learns where each device's serial number address is installed relative to other devices on the circuit. The mapping feature provides supervision of each device's installed location to prevent a detector from being reinstalled (after cleaning etc.) in a different location from where it was originally.

**Fast Stable Communication** - On-board intelligence means less information needs to be sent between the detector and the loop controller. Other than regular supervisory polling response, the detector only needs to communicate with the loop controller when it has something new to report.

## Accessories 28 31 01

**Detector mounting bases** have wiring terminals that are accessible from the "room-side" after mounting the base to the electrical box. The bases mount to North American 1-gang boxes and to 3½ inch or 4 inch octagon boxes, 1½ inches (38 mm) deep. They also mount to European BESA and 1-gang boxes with 60.3 mm fixing centers. The SIGA-SB4, SIGA-RB4, and SIGA-IB4 mount to North American 4 inch sq. electrical boxes in addition to the above boxes. They include the SIGA-TS4 Trim Skirt, which is used to cover the "mounting ears" on the base. The SIGA-AB4G mounts to a 4 inch square box only.


**SIGA-AB4G/T/LF**
**Audible Base**


**SIGA-SB**
**Standard Base**


**SIGA-IB**
**Isolator Base**


**SIGA-RB**
**Relay Base**


**SIGA-LED**
**Remote LED**

**Remote LED SIGA-LED** - The remote LED connects to the SIGA-SB or SIGA-SB4 Standard Base only. It features a North American size 1-gang plastic faceplate with a white finish and red alarm LED.

**SIGA-TS4 Trim Skirt** - Supplied with 4 inch bases, it can also be ordered separately to use with the other bases to help hide surface imperfections not covered by the smaller bases.

**Sounder Bases** - Signature Series sounder bases are designed for use where localized or group alarm signaling is required.

- **SIGA-AB4G** bases provide sounder capability to Signature Series to heat and smoke detectors. They are not intended for use with combination carbon monoxide detectors in Fire-plus-CO mode.
- **SIGA-AB4GT** bases provide sounder capability to Signature Series smoke and heat detectors, as well as carbon monoxide detectors when used with a SIGA-TCDR Temporal Pattern Generator.
- **SIGA-AB4G-LF** bases provide 520 Hz low frequency sounder capability to Signature Series smoke and heat detectors, as well as carbon monoxide detectors when used with a SIGA-TCDR Temporal Pattern Generator. The SIGA-AB4G-LF is suitable for applications requiring low frequency audible tones.

## Warnings & Cautions

- This detector does not operate without electrical power. As fires frequently cause power interruption, discuss further safeguards with the local fire protection specialist.
- This detector does not sense fires in areas where heat cannot reach the detector. Heat from fires in walls, roofs, or on the opposite side of closed doors may not reach the detector.
- This heat detector by itself does not provide life safety protection Use this detector with ionization and/or photoelectric smoke detectors.
- This detector does not detect oxygen levels, smoke, toxic gases, or flames. Use this device as part of a broad-based life safety program which includes a variety of information sources pertaining to heat and smoke levels, extinguishment systems, visual and audible devices, and other safety measures.
- Independent studies indicate that heat detectors should only be used when property protection alone is involved. Never rely on heat detectors as the sole means of fire protection.

# Typical Wiring

The detector mounting bases accept #18 AWG (0.75mm$^2$), #16 (1.0mm$^2$), #14 AWG (1.5mm$^2$), and #12 AWG (2.5mm$^2$) wire sizes. Sizes #16 AWG (1.0mm$^2$) and #18 AWG (0.75mm$^2$) are preferred for ease of installation.

## Standard Detector Base, SIGA-SB, SIGA-SB4

This is the basic mounting base for EDWARDS Signature Series detectors. The SIGA-LED Remote LED is supported by this Base.

| Term | Description |
|---|---|
| 1 | Not Used |
| 2 | DATA IN/OUT (+) |
| 3 | Not Used |
| 4 | DATA IN (-) |
| 4 | Remote LED (-) |
| 5 | Remote LED (+) |
| 6 | Not Used |
| 7 | DATA OUT (-) |

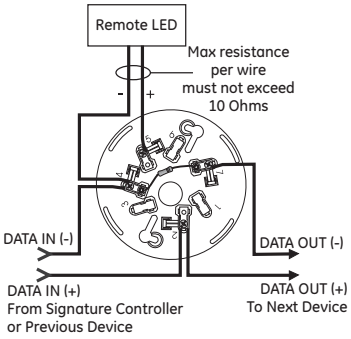


## Isolator Detector Base, SIGA-IB, SIGA-IB4

This base includes a built-in line fault isolator for use on Class A circuits. A detector must be installed for it to operate. The isolator base does not support the SIGA-LED Remote LED.

The isolator operates as follows:

- a short on the line causes all isolators to open within 23 msec
- at 10 msec intervals, beginning on one side of the Class A circuit nearest the loop controller, the isolators close to provide the next isolator down the line with power
- when the isolator next to the short closes, it reopens within 10 msec.

The process repeats beginning on the other side of the loop controller.

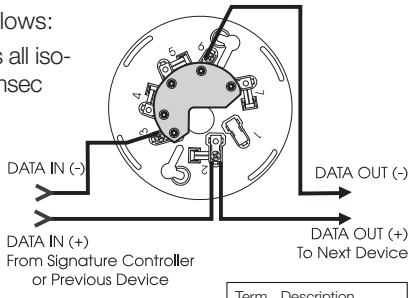


| Term | Description |
|---|---|
| 1 | Not Used |
| 2 | DATA IN/OUT (+) |
| 3 | DATA IN (-) |
| 4 | Not Used |
| 5 | Not Used |
| 6 | DATA OUT (-) |
| 7 | Not Used |

28 31 01

## Relay Detector Base, SIGA-RB, SIGA-RB4

This base includes a relay. Normally Open or Normally Closed operation is selected during installation. The dry contact is rated for 1 amp (pilot duty) @ 30 Vdc. The relay's position is supervised to avoid accidentally jarring it out of position. The SIGA-RB can be operated as a control relay if programmed to do so at the control panel. The relay base does not support the SIGA-LED Remote LED.

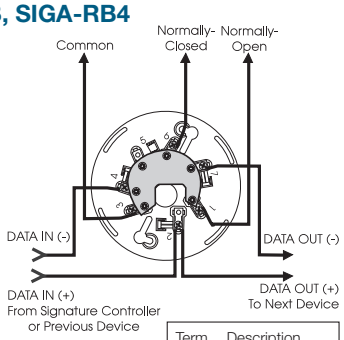


CONTACT RATING
1.0 Amp @ 30 VDC
(Pilot Duty)

| Term | Description |
|---|---|
| 1 | Normally Open |
| 2 | DATA IN/OUT (+) |
| 3 | Common |
| 4 | DATA IN (-) |
| 5 | Not Used |
| 6 | Normally-Closed |
| 7 | DATA OUT (-) |

## Audible Sounder Bases, Fire Mode

*AB4GT, AB4G, AB4G-LF sounder bases*

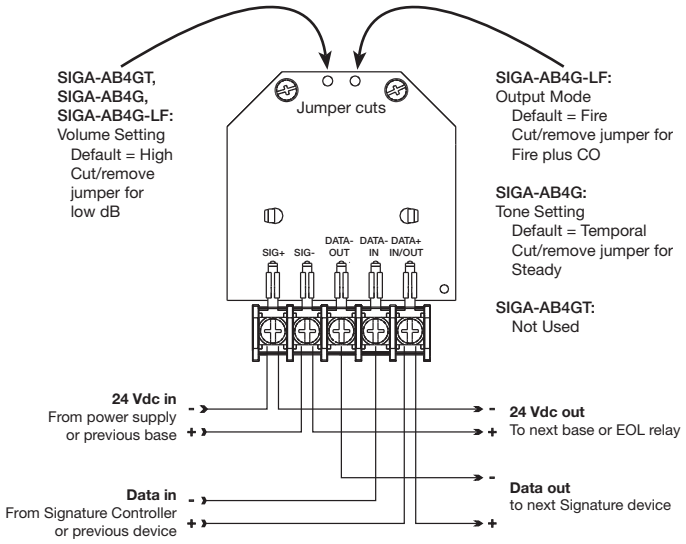

LIFE SAFETY & INCIDENT MANAGEMENT

Contact us...

Email: edwards.fire@fs.utc.com
Web: *Edwards-fire.com*

EDWARDS is a UTC brand.
1016 Corporate Park Drive
Mebane, NC 27302

© 2016 United Technologies Corporation.
All rights reserved.

28 31 01

## Dimensions

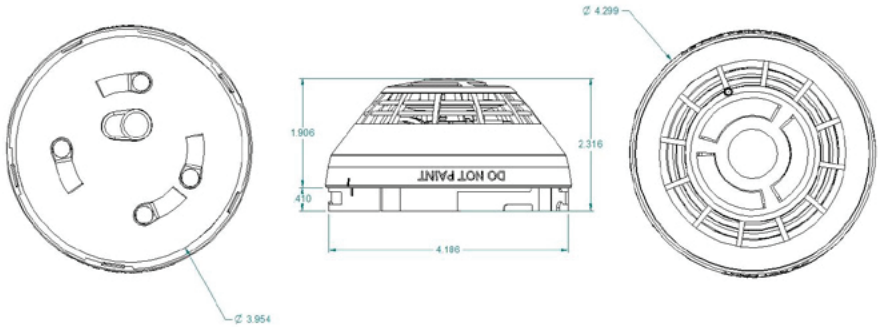


## Specifications

| | |
|---|---|
| Operating voltage | 15.20 to 19.95 VDC |
| Normal operating current | 32 µA |
| Alarm current | 32 µA |
| Vibration level | 10 to 35 Hz, with an amplitude of 0.01 in. |
| Rate-of-rise rating | 15°F/min (8°C/min) |
| Fixed temperature rating | 135°F (57.2°C). Actual alarm point 129 to 141°F (53.9 to 60.6°C). |
| Maximum spacing | 50 ft. (15.2 m) centers |
| Compatible bases | See Ordering Information |
| Compatible detector testers | Testifire 1000, Testifire 2000 |
| Operating environment | 32 to 100°F (0 to 38°C), 0 to 93% RH, noncondensing |
| Construction | High Impact Engineering Polymer, White |
| Storage temperature | -4 to 140°F (-20 to 60°C) |
| Agency Listings | CAN/ULC-S530, UL 521 |

## Ordering Information

| | Catalog Number | Description | Ship Wt. lbs (kg) |
|---|---|---|---|
| ★ | SIGA-HRD | Intelligent fixed temperature/Rate-of-rise heat detector | 0.4 (0.16) |
| | **Compatible Bases** | | |
| ★ | SIGA-SB | Detector Mounting Base - Standard | |
| | SIGA-SB4 | 4-inch Detector Mounting Base c/w Trim Skirt | |
| | SIGA-RB | Detector Mounting Base w/Relay | |
| | SIGA-RB4 | 4-inch Detector Mounting Base w/Relay, c/w Trim Skirt | 0.2 (.09) |
| | SIGA-IB | Detector Mounting Base w/Fault Isolator | |
| | SIGA-IB4 | 4-inch Detector Mounting Base w/ Fault Isolator, c/w Trim Skirt | |
| | SIGA-LED | Remote Alarm LED (not for EN54 applications) | |
| | SIGA-AB4G | Audible (Sounder) Base for Fire Detectors | 0.3 (0.15) |
| | SIGA-AB4G-LF | Low Frequency Audible (Sounder) Base for CO and Fire Detectors | 0.3 (0.15) |
| | SIGA-AB4GT | Audible (Sounder) Base for CO and Fire Detectors | 0.3 (0.15) |
| | SIGA-TS4 | Trim Skirt (supplied with 4-inch bases) | 0.1 (0.04) |
| | SIGA-TS | Trim Skirt - (optional for non 4-inch bases) | 0.1 (0.04) |
| | SIGA-DMP | Detector Mounting Plate | 3.0 (1.4) |
| | SIGA-RTA | Detector Removal Tool | |

28 31 01

LIFE SAFETY & INCIDENT MANAGEMENT

# Intelligent Smoke Detector

## SIGA-PD



S853

## Overview

The Signature Series SIGA-PD optical smoke detector brings advanced sensing technology to a practical design that increases efficiency, saves installation time, cuts costs, and extends life safety and property protection capabilities. Continuous self-diagnostics ensure reliability over the long-haul, while environmental compensation helps reduce maintenance costs.

Like all Signature Series detectors, the SIGA-PD is an intelligent device that gathers analog information from its optical sensor, converting this data into digital signals. To make an alarm decision, the detector's on-board microprocessor measures and analyzes sensor readings and compares this information to historical data. Digital filters remove signal patterns that are not typical of fires, thus virtually eliminating unwanted alarms.

## Standard Features

***Note:*** *Some features described here may not be supported by all control systems. Check your control panel's Installation and Operation Guide for details.*

- Next Generation Optical Smoke Sensing Technology
- Wide 0.53 to 3.94 %/ft. (1.7 to 12.35 %/m) smoke obscuration
- Uses Existing Wiring
- Automatic Device Mapping
- Up To 250 Total Signature Addresses Per Loop
- Two Levels of Environmental Compensation
- Two Levels of Dirty Detector Warning
- Twenty Pre-Alarm Settings
- Five Sensitivity Settings
- Non-Volatile Memory
- Electronic Addressing
- Identification of Dirty or Defective Detectors
- Automatic Day/Night Sensitivity Adjustment
- Bicolor (Green/Red) Status Led
- Standard, Relay, Fault Isolator, and Audible Mounting Bases
- Sensor Markings Provide Easy Testing Identification

Provide detectors approved for the location in which they are installed as per the electrical drawings.

STANTEC PROJECT #: 110126045

SUBMITTAL # ELE-002 Fire Alarm Systems

This review by Stantec is for general conformance with the design concept of Stantec's design of the:

☐ Architectural ☐ Structural ☐ Mechanical ☑ Electrical ☐ Other

Stantec

☐ REVIEWED

☑ REVIEWED, AS NOTED

☐ REVISE AND RESUBMIT

☐ NOT REVIEWED

DATE June 20, 2018

BY Chester Martinez, E.I.T.

component(s) only and does not mean that Stantec has verified or approves the shop drawing(s). The Contractor remains solely responsible for the shop drawing(s) and this review by Stantec does not relieve the Contractor of the Contractor's responsibility for errors or omissions in the shop drawing(s) or for meeting all requirements of the contract documents. This review does not mean that Stantec approves the detailed design inherent in the shop drawing, responsibility for which shall remain with the Contractor submitting same, nor does this review mean that Stantec accepts any deviation of the shop drawing(s) from the contract documents. The Contractor is responsible for confirming all dimensions and correlating them at the job site, for all construction means, methods and techniques, and for coordination of construction work of all trades, including coordination of all shop drawings.

## Application

The SIGA-PD detects extremely small particles of combustion and triggers an alarm at the first sign of smoke. Thanks to its high-performance forward-scattering reflective response technology, the photoelectric smoke sensor responds quickly and reliably to a wide range of fire types, especially slow burning fires fuelled by combustibles typically found in modern multi-use buildings.

## Compatibility

The SIGA-PD detector is compatible only with the Signature Loop Controller.

## Installation

Signature Series detectors mount to North American 1-gang boxes, 3-1/2 inch or 4 inch octagon boxes, and to 4 inch square electrical boxes 1-1/2 inches (38 mm) deep. They mount to European BESA and 1-gang boxes with 60.3 mm fixing centers. See mounting base installation and wiring for more information.

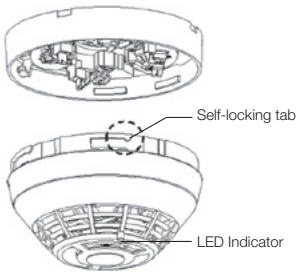


## Sensing and reporting technology

The microprocessor in each detector provides additional benefits - Self-diagnostics and History Log, Automatic Device Mapping, and Fast, Stable Communication.

**Self-diagnostics and History Log** - Each Signature Series detector constantly runs self-checks to provide important maintenance information. The results of the self-check are automatically updated and permanently stored in the detector's non-volatile memory

**Automatic Device Mapping** - The loop controller learns where each device's serial number address is installed relative to other devices on the circuit. The mapping feature provides supervision of each device's installed location to prevent a detector from being reinstalled (after cleaning etc.) in a different location from where it was originally.

**Fast Stable Communication** - On-board intelligence means less information needs to be sent between the detector and the loop controller. Other than regular supervisory polling response, the detector only needs to communicate with the loop controller when it has something new to report.

## Testing & Maintenance 28 31 01

Each detector automatically identifies when it is dirty or defective and causes a "dirty detector" message. The detector's sensitivity measurement can also be transmitted to the loop controller. A sensitivity report may be printed to satisfy NFPA sensitivity measurements, which must be conducted at the end of the first year and every two years thereafter.

The user-friendly maintenance program shows the current state of each detector and other pertinent messages. Single detectors may be turned off temporarily from the control panel. Availability of maintenance features is dependent on the fire alarm system used.

## Accessories

**Detector mounting bases** have wiring terminals that are accessible from the "room-side" after mounting the base to the electrical box. The bases mount to North American 1-gang boxes and to 3½ inch or 4 inch octagon boxes, 1½ inches (38 mm) deep. They also mount to European BESA and 1-gang boxes with 60.3 mm fixing centers. The SIGA-SB4, SIGA-RB4, and SIGA-IB4 mount to North American 4 inch sq. electrical boxes in addition to the above boxes. They include the SIGA-TS4 Trim Skirt, which is used to cover the "mounting ears" on the base. The SIGA-AB4G mounts to a 4 inch square box only.


**SIGA-AB4G/T/LF**
**Audible Base**


**SIGA-SB**
**Standard Base**


**SIGA-IB**
**Isolator Base**


**SIGA-RB**
**Relay Base**


**SIGA-LED**
**Remote LED**

**Remote LED SIGA-LED** - The remote LED connects to the SIGA-SB or SIGA-SB4 Standard Base only. It features a North American size 1-gang plastic faceplate with a white finish and red alarm LED.

**SIGA-TS4 Trim Skirt** - Supplied with 4 inch bases, it can also be ordered separately to use with the other bases to help hide surface imperfections not covered by the smaller bases.

**Sounder Bases** - Signature Series sounder bases are designed for use where localized or group alarm signaling is required.

- **SIGA-AB4G** bases provide sounder capability to Signature Series to heat and smoke detectors. They are not intended for use with combination carbon monoxide detectors in Fireplus-CO mode.
- **SIGA-AB4GT** bases provide sounder capability to Signature Series smoke and heat detectors, as well as carbon monoxide detectors when used with a SIGA-TCDR Temporal Pattern Generator.
- **SIGA-AB4G-LF** bases provide 520 Hz low frequency sounder capability to Signature Series smoke and heat detectors, as well as carbon monoxide detectors when used with a SIGA-TCDR Temporal Pattern Generator. The SIGA-AB4G-LF is suitable for applications requiring low frequency audible tones.

# Typical Wiring



The detector mounting bases accept #18 AWG (0.75mm$^2$), #16 (1.0mm$^2$), #14 AWG (1.5mm$^2$), and #12 AWG (2.5mm$^2$) wire sizes. Sizes #16 AWG (1.0mm$^2$) and #18 AWG (0.75mm$^2$) are preferred for ease of installation.

## Standard Detector Base, SIGA-SB, SIGA-SB4

This is the basic mounting base for EDWARDS Signature Series detectors. The SIGA-LED Remote LED is supported by this Base.

| Term | Description |
|---|---|
| 1 | Not Used |
| 2 | DATA IN/OUT (+) |
| 3 | Not Used |
| 4 | DATA IN (-) |
| 4 | Remote LED (-) |
| 5 | Remote LED (+) |
| 6 | Not Used |
| 7 | DATA OUT (-) |

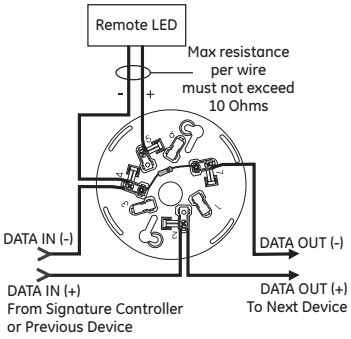


## Isolator Detector Base, SIGA-IB, SIGA-IB4

This base includes a built-in line fault isolator for use on Class A circuits. A detector must be installed for it to operate. The isolator base does not support the SIGA-LED Remote LED.

The isolator operates as follows:

- a short on the line causes all isolators to open within 23 msec
- at 10 msec intervals, beginning on one side of the Class A circuit nearest the loop controller, the isolators close to provide the next isolator down the line with power
- when the isolator next to the short closes, it reopens within 10 msec.

The process repeats beginning on the other side of the loop controller.

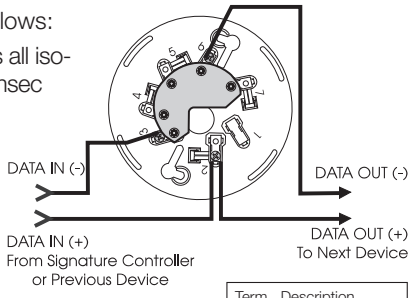


| Term | Description |
|---|---|
| 1 | Not Used |
| 2 | DATA IN/OUT (+) |
| 3 | DATA IN (-) |
| 4 | Not Used |
| 5 | Not Used |
| 6 | DATA OUT (-) |
| 7 | Not Used |

## Relay Detector Base, SIGA-RB, SIGA-RB4

This base includes a relay. Normally Open or Normally Closed operation is selected during installation. The dry contact is rated for 1 amp (pilot duty) @ 30 Vdc. The relay's position is supervised to avoid accidentally jarring it out of position. The SIGA-RB can be operated as a control relay if programmed to do so at the control panel. The relay base does not support the SIGA-LED Remote LED.

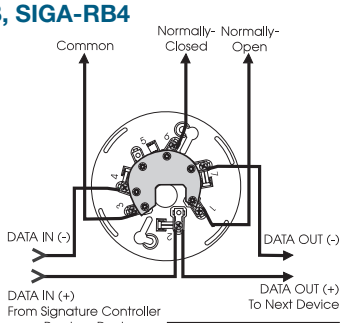


CONTACT RATING
1.0 Amp @ 30 VDC
(Pilot Duty)

| Term | Description |
|---|---|
| 1 | Normally Open |
| 2 | DATA IN/OUT (+) |
| 3 | Common |
| 4 | DATA IN (-) |
| 5 | Not Used |
| 6 | Normally-Closed |
| 7 | DATA OUT (-) |

## Audible Sounder Bases, Fire Mode

*AB4GT, AB4G, AB4G-LF sounder bases*

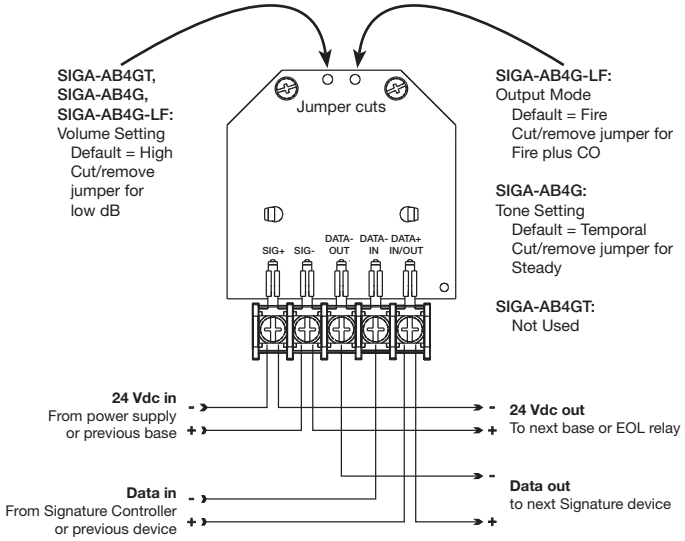


# Warnings & Cautions

- This detector does not operate without electrical power. As fires frequently cause power interruption, discuss further safeguards with the local fire protection specialist.
- This detector does not sense fires in areas where smoke cannot reach the detector. Smoke from fires in walls, roofs, or on the opposite side of closed doors may not reach the detector.
- Photoelectric detectors have a wide range of fire-sensing capabilities and are best suited for detecting slow, smoldering fires.
- In Canada, install according to CAN/ULC-S524 Standard for the Installation of Fire Alarm Systems, CSA C22.1 Canadian Electrical Code, and the local authority having jurisdiction.

LIFE SAFETY & INCIDENT MANAGEMENT

Contact us...

Email: edwards.fire@fs.utc.com
Web: *Edwards-fire.com*

EDWARDS is a UTC brand.
1016 Corporate Park Drive
Mebane, NC 27302

© 2016 United Technologies Corporation.
All rights reserved.

## Dimensions

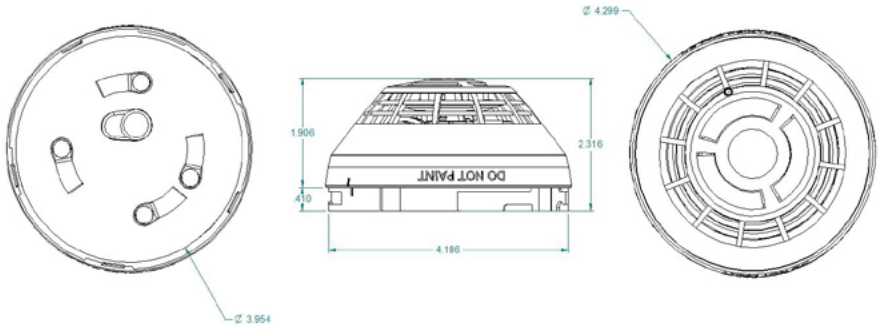


## Specifications

| | |
|---|---|
| Operating voltage | 15.20 to 19.95 VDC |
| Normal operating current | 32 µA |
| Alarm current | 32 µA |
| Smoke Sensitivity Range | UL/ULC: 0.53 to 3.94 %/ft. (1.7 to 12.35 %/m) obscuration |
| Vibration level | 10 to 35 Hz, with an amplitude of 0.01 in. |
| Air velocity | 0 to 4,000 ft./min (0 to 20 m/s) |
| Wall mounting | 12 in. (305 mm) max. from ceiling |
| Compatible bases | See Ordering Information |
| Compatible detector testers | Testifire 1000, Testifire 2000 |
| Operating environment | 32 to 120°F (0 to 49°C), 0 to 93% RH, noncondensing |
| Construction | High Impact Engineering Polymer, White |
| Storage temperature | -4 to 140°F (-20 to 60°C) |
| Environmental compensation | Automatic |
| Agency Listings | CAN/ULC-S529, UL 268, UL 268A |

## Ordering Information

| | Catalog Number | Description | Ship Wt. lbs (kg) |
|---|---|---|---|
| ★ | SIGA-PD | Intelligent Optical Smoke Detector | 0.4 (0.16) |
| | **Accessories** | | |
| ★ | SIGA-SB | Detector Mounting Base - Standard | |
| | SIGA-SB4 | 4-inch Detector Mounting Base c/w Trim Skirt | |
| | SIGA-RB | Detector Mounting Base w/Relay | |
| | SIGA-RB4 | 4-inch Detector Mounting Base w/Relay, c/w Trim Skirt | 0.2 (.09) |
| | SIGA-IB | Detector Mounting Base w/Fault Isolator | |
| | SIGA-IB4 | 4-inch Detector Mounting Base w/ Fault Isolator, c/w Trim Skirt | |
| | SIGA-LED | Remote Alarm LED (not for EN54 applications) | |
| | SIGA-AB4G | Audible (Sounder) Base for Fire Detectors | 0.3 (0.15) |
| | SIGA-AB4G-LF | Low Frequency Audible (Sounder) Base for CO and Fire Detectors | 0.3 (0.15) |
| | SIGA-AB4GT | Audible (Sounder) Base for CO and Fire Detectors | 0.3 (0.15) |
| | SIGA-TS4 | Trim Skirt (supplied with 4-inch bases) | 0.1 (0.04) |
| | SIGA-TS | Trim Skirt - (optional for non 4-inch bases) | 0.1 (0.04) |
| | SIGA-DMP | Detector Mounting Plate | 3.0 (1.4) |
| | SIGA-RTA | Detector Removal Tool | |
| | SIGA-VA | Detector Cleaning Tool | |

EST™
Life Safety & Communications

28 31 01

# Input Modules

## SIGA-CT1, SIGA-CT1HT, SIGA-CT2, SIGA-MCT2

STANTEC PROJECT #: 110126045 SUBMITTAL # ELE-002 Fire Alarm Systems

This review by Stantec is for general conformance with the design concept of Stantec's design of the:

☐ Architectural ☐ Structural ☐ Mechanical ☑ Electrical ☐ Other

component(s) only and does not mean that Stantec has verified or approves the shop drawing(s). The Contractor remains solely responsible for the shop drawing(s) and this review by Stantec does not relieve the Contractor of the Contractor's responsibility for errors or omissions in the shop drawing(s) or for meeting all requirements of the contract documents. This review does not mean that Stantec approves the detailed design inherent in the shop drawing, responsibility for which shall remain with the Contractor submitting same, nor does this review mean that Stantec accepts any deviation of the shop drawing(s) from the contract documents. The Contractor is responsible for confirming all dimensions and correlating them at the job site, for all construction means, methods and techniques, and for coordination of construction work of all trades, including coordination of all shop drawings.

Stantec

☑ REVIEWED
☐ REVIEWED, AS NOTED
☐ REVISE AND RESUBMIT
☐ NOT REVIEWED

DATE June 20, 2018

BY Chester Martinez, E.I.T.



SIGA-MCT2



SIGA-CT1/2

MEA

Application Notes Available

## Overview

The SIGA-CT1 Single Input Module, SIGA-CT1HT High Temperature Single Input Module and SIGA-CT2/SIGA-MCT2 Dual Input Modules are intelligent analog addressable devices used to connect one or two Class B normally-open Alarm, Supervisory, or Monitor type dry contact Initiating Device Circuits (IDC).

The actual function of these modules is determined by the "personality code" selected by the installer. This code is downloaded to the module from the Signature loop controller during system configuration.

The input modules gather analog information from the initiating devices connected to them and convert it into digital signals. The module's on-board microprocessor analyzes the signal and decides whether or not to input an alarm.

**The SIGA-CT1, SIGA-CT1HT and SIGA-CT2** mount to standard North American 1-gang electrical boxes, making them ideal for locations where only one module is required. Separate I/O and data loop connections are made to each module.

The SIGA-CT1HT module operates at an expanded temperature range of 32 ºF to 158 ºF (0 ºC to 70 ºC) for those applications requiring more extreme environmental temperature variation.

**The SIGA-MCT2** is part of the UIO family of plug-in Signature Series modules. It functions identically to the SIGA-CT2, but takes advantage of the modular flexibility and easy installation that characterizes all UIO modules. Two- and six-module UIO motherboards are available. All wiring connections are made to terminal blocks on the motherboard. UIO assemblies may be mounted in Edwards enclosures.

## Standard Features

- **Multiple applications**
  Including Alarm, Alarm with delayed latching (retard) for waterflow applications, Supervisory, and Monitor. The installer selects one of four "personality codes" to be downloaded to the module through the loop controller.
- **SIGA-CT1HT rated for high temperature environments**
  Suitable for attic installation and monitoring high temperature heat detectors.
- **Plug-in (UIO) or standard 1-gang mount**
  UIO versions allow quick installation where multiple modules are required. The 1-gang mount version is ideal for remote locations that require a single module.
- **Automatic device mapping**
  Signature modules transmit information to the loop controller regarding their circuit locations with respect to other Signature devices on the wire loop.
- **Electronic addressing**
  Programmable addresses are downloaded from the loop controller, a PC, or the SIGA-PRO Signature Program/Service Tool. There are no switches or dials to set.
- **Stand-alone operation**
  The module makes decisions and inputs an alarm from initiating devices connected to it even if the loop controller's polling interrogation stops. (Function availability dependent upon control panel.)
- **Ground fault detection by address**
  Detects ground faults right down to the device level.

## Signature Series Overview

The Signature Series intelligent analog-addressable system from Edwards Security is an entire family of multi-sensor detectors and mounting bases, multiple-function input and output modules, network and non-network control panels, and user-friendly maintenance and service tools. Analog information from equipment connected to Signature devices is gathered and converted into digital signals. An onboard microprocessor in each Signature device measures and analyzes the signal and decides whether or not to input an alarm. The microprocessor in each Signature device provides four additional benefits – Self-diagnostics and History Log, Automatic Device Mapping, Stand-alone Operation and Fast, Stable Communication.

**Self-diagnostics and History Log** – Each Signature Series device constantly runs self-checks to provide important maintenance information. The results of the self-check are automatically updated and permanently stored in its non-volatile memory. This information is accessible for review any time at the control panel, PC, or using the SIGA-PRO Signature Program/Service Tool.

**Automatic Device Mapping** –The Signature Data Controller (SDC) learns where each device's serial number address is installed relative to other devices on the circuit. The SDC keeps a map of all Signature Series devices connected to it. The Signature Series Data Entry Program also uses the mapping feature. With interactive menus and graphic support, the wired circuits between each device can be examined. Layout or "as-built" drawing information showing branch wiring (T-taps), device types and their address are stored on disk for printing hard copy.

## Installation

**SIGA-CT1, SIGA-CT1HT and SIGA-CT2:** modules mount to North American 2½ inch(64 mm) deep 1-gang boxes and 1½ inch (38 mm) deep 4 inch square boxes with 1-gang covers and SIGA-MP mounting plates. The terminals are suited for #12 to #18 AWG (2.5 mm$^2$ to 0.75 mm$^2$) wire size.

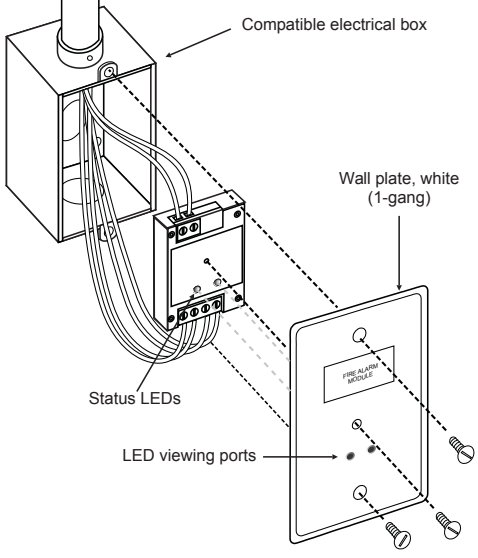


**SIGA-MCT2:** mount the UIO motherboard inside a suitable Edwards enclosure with screws and washers provided. Plug the SIGA-MCT2 into any available position on the motherboard and secure the module to the motherboard with the captive screws. Wiring connections are made to the terminals on the motherboard (see wiring diagram). UIO motherboard terminals are suited for #12 to #18 AWG (2.5 mm$^2$ to 0.75 mm$^2$) wire size.

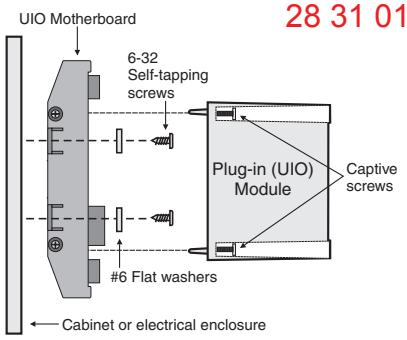


**Electronic Addressing** - The loop controller electronically addresses each module, saving valuable time during system commissioning. Setting complicated switches or dials is not required. Each module has its own unique serial number stored in its on-board memory. The loop controller identifies each device on the loop and assigns a "soft" address to each serial number. If desired, the modules can be addressed using the SIGA-PRO Signature Program/Service Tool.

Edwards recommends that this module be installed according to latest recognized edition of national and local fire alarm codes.

## Application

The duty performed by the SIGA-CT1 and SIGA-CT2/MCT2 is determined by their sub-type code or "Personality Code". The code is selected by the installer depending upon the desired application and is downloaded from the loop controller.

One personality code can be assigned to the SIGA-CT1. Two personality codes can be assigned to the SIGA-CT2/MCT2. Codes 1, 2, 3 and 4 can be mixed on SIGA-CT2/MCT2 modules only. For example, personality code 1 can be assigned to the first address (circuit A) and code 4 can be assigned to the second address (circuit B).

**NORMALLY-OPEN ALARM - LATCHING (Personality Code 1) -** Assign to one or both circuits. Configures either circuit A or B or both for Class B normally open dry contact initiating devices such as Pull Stations, Heat Detectors, etc. An ALARM signal is sent to the loop controller when the input contact is closed. The alarm condition is latched at the module.

**NORMALLY-OPEN ALARM - DELAYED LATCHING (Personality Code 2) -** Assign to one or both circuits. Configures either circuit A or B or both for Class B normally-open dry contact initiating devices such as Waterflow Alarm Switches. An ALARM signal is sent to the loop controller when the input contact is closed for approximately 16 seconds. The alarm condition is latched at the module.

**NORMALLY-OPEN ACTIVE - NON-LATCHING (Personality Code 3) -** Assign to one or both circuits. Configures either circuit A or B or both for Class B normally-open dry contact monitoring input such as from Fans, Dampers, Doors, etc. An ACTIVE signal is sent to the loop controller when the input contact is closed. The active condition is not latched at the module.

**NORMALLY-OPEN ACTIVE - LATCHING (Personality Code 4) -** Assign to one or both circuits. Configures either circuit A or B or both for Class B normally open dry contact monitoring input such as from Supervisory and Tamper Switches. An ACTIVE signal is sent to the loop controller when the input contact is closed. The active condition is latched at the module.

# Typical Wiring

28 31 01

Modules will accept #18 AWG (0.75mm²), #16 (1.0mm²), and #14AWG (1.50mm²), and #12 AWG (2.50mm²) wire sizes.

Note: Sizes #16 AWG (1.0mm²) and #18 AWG (0.75mm²) are preferred for ease of installation. See Signature Loop Controller catalog sheet for detailed wiring requirement specifications.

| Initiating (Slave) Device Circuit Wire Specifications | | |
|---|---|---|
| Maximum Allowable Wire Resistance | 50 ohms (25 ohms per wire) per Circuit | |
| Maximum Allowable Wire Capacitance | 0.1µF per Circuit | |
| For Design Reference: | **Wire Size** | **Maximum Distance to EOLR** |
| | #18 AWG (0.75 mm²) | 4,000 ft (1,219 m) |
| | #16 AWG (1.00 mm²) | |
| | #14 AWG (1.50 mm²) | |
| | #12 AWG (1.50 mm²) | |

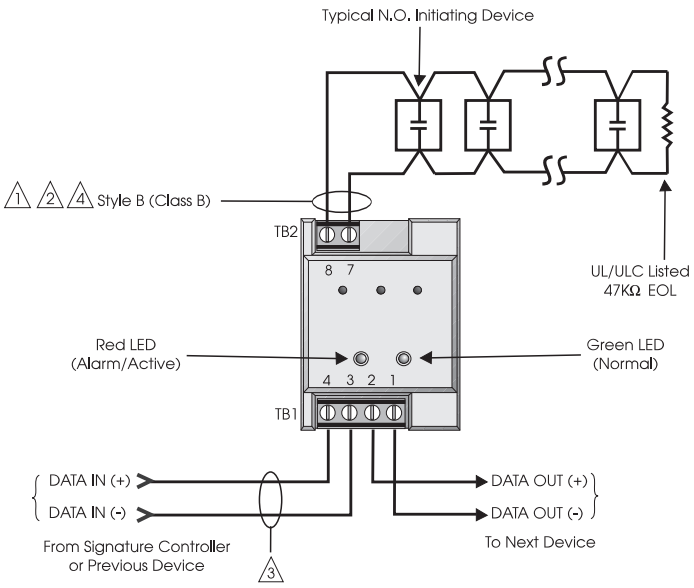


SIGA-CT1, SIGA-CT1HT

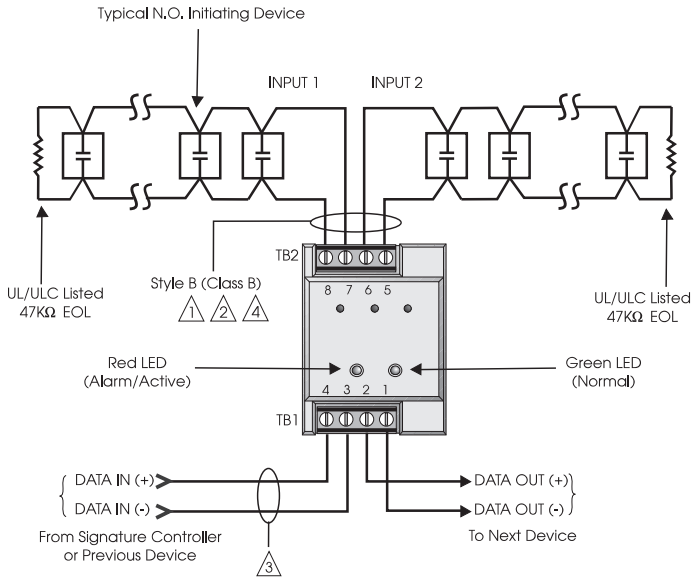


SIGA-CT2

**NOTES**

1. Maximum 25 Ohm resistance per wire.
2. Maximum #12 AWG (2.5 mm² ) wire; Minimum #18 AWG (0.75 mm2).
3. Refer to Signature controller installation sheet for wiring specifications.
4. Maximum 10 Vdc @ 350 µA
5. The SIGA-UIO6R and the SIGA-UIO2R do not come with TB14.
6. All wiring is supervised and power-limited.
7. These modules will not support 2-wire smoke detectors.

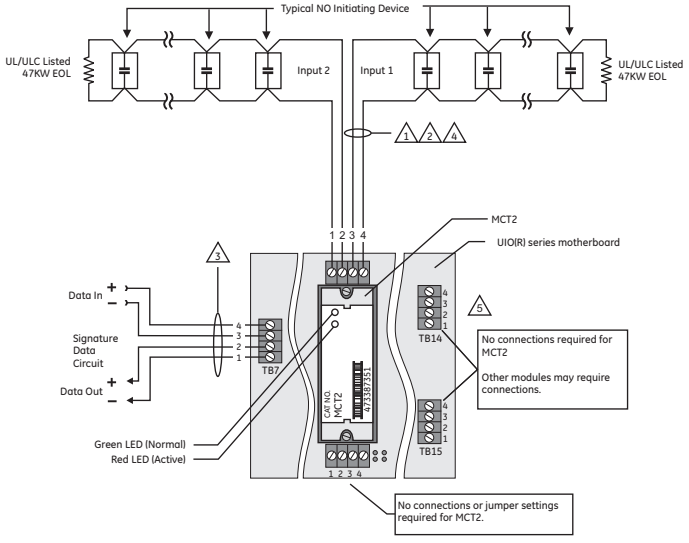


SIGA-MCT2

# Warnings & Cautions

This module will not operate without electrical power. As fires frequently cause power interruption, we suggest you discuss further safeguards with your local fire protection specialist.

# Compatibility

The Signature Series modules are compatible only with EST's Signature Loop Controller.

EDWARDS
A UTC Fire & Security Company

**Detection & alarm since 1872**

**U.S.**
**T 888-378-2329**
**F 866-503-3996**

**Canada**
**Chubb Edwards**
**T 519 376 2430**
**F 519 376 7258**

**Southeast Asia**
**T : +65 6391 9300**
**F : +65 6391 9306**

**India**
**T : +91 80 4344 2000**
**F : +91 80 4344 2050**

**Australia**
**T +61 3 9239 1200**
**F +61 3 9239 1299**

**Europe**
**T +32 2 725 11 20**
**F +32 2 721 86 13**

**Latin America**
**T 305 593 4301**
**F 305 593 4300**

**utcfireandsecurity.com**

**© 2010 UTC Fire & Security.**
**All rights reserved.**

28 31 01

## Specifications

| Catalog Number | SIGA-CT1HT | SIGA-CT1 | SIGA-CT2 | SIGA-MCT2 |
|---|---|---|---|---|
| Description | Single Input Module | | Dual Input Module | |
| Type Code | 48 (factory set) Four sub-types (personality codes) are available | | 49 (factory set) Four sub-types (personality codes) are available | |
| Address Requirements | Uses One Module Address | | Uses Two Module Addresses | |
| Operating Current | Standby = 250µA; Activated = 400µA | | Standby = 396µA; Activated = 680µA | |
| Operating Voltage | 15.2 to 19.95 Vdc (19 Vdc nominal) | | | |
| Construction | High Impact Engineering Polymer | | | |
| Mounting | North American 2½ inch (64 mm) deep one-gang boxes and 1½ inch (38 mm) deep 4 inch square boxes with one-gang covers and SIGA-MP mounting plates | | | UIO2R/6R/6 Motherboard |
| Operating Environment | 32°F to 158°F (0°C to 70°C) | 32°F to 120°F (0°C to 49°C) | | |
| Storage Environment | -4°F to 140°F (-20°C to 60°C); Humidity: 0 to 93% RH | | | |
| LED Operation | On-board Green LED - Flashes when polled; On-board Red LED - Flashes when in alarm/active. Both LEDs - Glow steady when in alarm (stand-alone) | | | |
| Compatibility | Use with Signature Loop Controller | | | |
| Agency Listings | UL, ULC, MEA, CSFM | | | |

## Ordering Information

| Catalog Number | Description | Ship Wt. lbs (kg) |
|---|---|---|
| SIGA-CT1 | Single Input Module — UL/ULC Listed | 0.4 (0.15) |
| SIGA-CT1HT | Single Input Module High Teperature Operation UL/ULC Listed | 0.4 (0.15) |
| ★ SIGA-CT2 | Dual Input Module — UL/ULC Listed | 0.4 (0.15) |
| SIGA-MCT2 | Dual Input Plug-in (UIO) Module — UL, ULC Listed | 0.1 (0.05) |

| Related Equipment | | |
|---|---|---|
| 27193-11 | Surface Mount Box - Red, 1-gang | 1.0 (0.6) |
| 27193-16 | Surface Mount Box - White, 1-gang | 1.0 (0.6) |
| SIGA-UIO2R | Universal Input-Output Module Board w/Riser Inputs — Two Module Positions | 0.32 (0.15) |
| SIGA-UIO6R | Universal Input-Output Module Board w/Riser Inputs — Six Module Positions | 0.62 (0.28) |
| SIGA-UIO6 | Universal Input-Output Module Board — Six Module Positions | 0.56 (0.25) |
| MFC-A | Multifunction Fire Cabinet — Red, supports Signature Module Mounting Plates | 7.0 (3.1) |
| SIGA-MB4 | Transponder Mounting Bracket (allows for mounting two 1-gang modules in a 2-gang box) | 0.4 (0.15) |
| SIGA-MP1 | Signature Module Mounting Plate, 1 footprint | 1.5 (0.70) |
| SIGA-MP2 | Signature Module Mounting Plate, 1/2 footprint | 0.5 (0.23) |
| SIGA-MP2L | Signature Module Mounting Plate, 1/2 extended footprint | 1.02 (0.46) |

EST™
Life Safety & Communications

28 31 01

# Control Relay Modules

## SIGA-CR, SIGA-MCR, SIGA-CRR, SIGA-MCRR




MEA

## Overview

The Control Relay Module and the Polarity Reversal Relay Module are part of the Signature Series system. They are intelligent analog addressable devices available in either plug-in (UIO) versions, or standard 1-gang mount versions.

**The SIGA-CR/MCR** Control Relay Module provides a Form "C" dry relay contact to control external appliances such as door closers, fans, dampers etc. This device does not provide supervision of the state of the relay contact. Instead, the on-board microprocessor ensures that the relay is in the proper ON/OFF state. Upon command from the loop controller, the SIGA-CR/MCR relay activates the normally open or normally-closed contact.

**The SIGA-CRR/MCRR** Polarity Reversal Relay Module provides a Form "C" dry relay contact to power and activate a series of SIGA-AB4G Audible Sounder Bases. Upon command from the Signature loop controller, the SIGA-CRR reverses the polarity of its 24 Vdc output, thus activating all Sounder Bases on the data loop.

**Standard-mount versions (SIGA-CR and SIGA-CRR)** are installed to standard North American 1-gang electrical boxes, making them ideal for locations where only one module is required. Separate I/O and data loop connections are made to each module.

**Plug-in UIO versions (SIGA-MCR and SIGA-MCRR)** are part of the UIO family of plug-in Signature Series modules. They function identically to the standard mount versions, but take advantage of the modular flexibility and easy installation that characterizes all UIO modules. Two- and six-module UIO motherboards are available. All wiring connections are made to terminal blocks on the motherboard. UIO assemblies may be mounted in Edwards enclosures.

## Standard Features

- **Provides one no/nc contact (SIGA-CR/MCR)**
  Form "C" dry relay contact can be used to control external appliances such as door closers, fans, dampers etc.
- **Allows group operation of sounder bases**
  The SIGA-CRR/MCRR reverses the polarity of its 24 Vdc output, thus activating all Sounder Bases on the data loop.
- **Plug-in (UIO) or standard 1-gang mount**
  UIO versions allow quick installation where multiple modules are required. The 1-gang mount version is ideal for remote locations that require a single module.
- **Automatic device mapping**
  Signature modules transmit information to the loop controller regarding their circuit locations with respect to other Signature devices on the wire loop.
- **Electronic addressing**
  Programmable addresses are downloaded from the loop controller, a PC, or the SIGA-PRO Signature Program/Service Tool; there are no switches or dials to set.
- **Intelligent device with microprocessor**
  All decisions are made at the module to allow lower communication speed with substantially improved control panel response time and less sensitivity to line noise and loop wiring properties; twisted or shielded wire is not required.
- **Ground fault detection by address**
  Detects ground faults right down to the device level.

## Installation

**SIGA-CR and SIGA-CRR:** modules mount to North American 2½ inch (64 mm) deep 1-gang boxes and 1½ inch (38 mm) deep 4 inch square boxes with 1-gang covers and SIGA-MP mounting plates. The terminals are suited for #12 to #18 AWG (2.5 mm$^2$ to 0.75 mm$^2$) wire size.

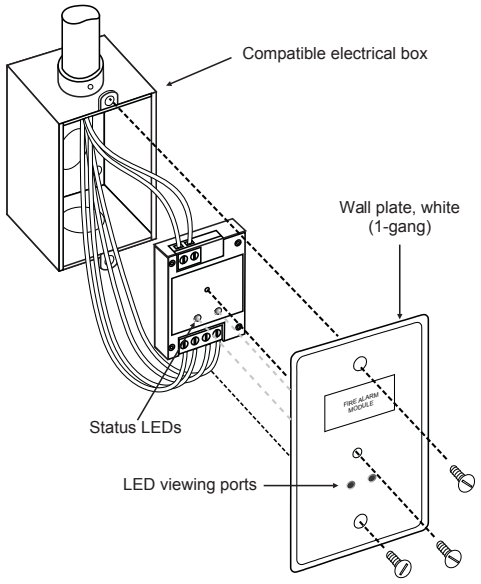


**SIGA-MCR and SIGA-MCRR:** mount the UIO motherboard inside a suitable Edwards enclosure with screws and washers provided. Plug the module into any available position on the motherboard and secure the module to the motherboard with the captive screws. Wiring connections are made to the terminals on the motherboard (see wiring diagram). UIO motherboard terminals are suited for #12 to #18 AWG (2.5 mm$^2$ to 0.75 mm$^2$) wire size.

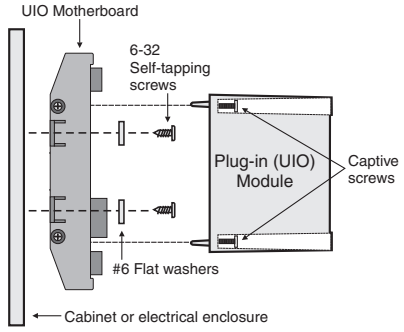


**Electronic Addressing** - The loop controller electronically addresses each module, saving valuable time during system commissioning. Setting complicated switches or dials is not required. Each module has its own unique serial number stored in its onboard memory. The loop controller identifies each device on the loop and assigns a "soft" address to each serial number. If desired, the modules can be addressed using the SIGA-PRO Signature Program/Service Tool.

Edwards recommends that this module be installed according to latest recognized edition of national and local fire alarm codes.

## Application

The operation of Signature Series control relays is determined by their sub-type code or "Personality Code."

**Personality Code 8: CONTROL RELAY (SIGA-CR/MCR) - Dry Contact Output**. This setting configures the module to provide one Form "C" DRY RELAY CONTACT to control Door Closers, Fans, Dampers, etc. Contact rating is 2.0 amp @ 24 Vdc; 0.5 amp @ 120 Vac (or 220 Vac for non-UL applications). Personality Code 8 is assigned at the factory. No user configuration is required.

**Personality Code 8: POLARITY REVERSAL RELAY MODULE (SIGA-CRR/MCRR).** This setting configures the module to reverse the polarity of its 24 Vdc output. Contact rating is 2.0 amp @ 24 Vdc (pilot duty). Personality Code 8 is assigned at the factory. No user configuration is required.

## Compatibility

The Signature Series modules are compatible only with EST's Signature Loop Controller.

## Warnings & Cautions

This module will not operate without electrical power. As fires frequently cause power interruption, we suggest you discuss further safeguards with your local fire protection specialist.

## Testing & Maintenance

The module's automatic self-diagnosis identifies when it is defective and causes a trouble message. The user-friendly maintenance program shows the current state of each module and other pertinent messages. Single modules may be turned off (deactivated) temporarily, from the control panel. Availability of maintenance features is dependent on the fire alarm system used. Scheduled maintenance (Regular or Selected) for proper system operation should be planned to meet the requirements of the Authority Having Jurisdiction (AHJ). Refer to current NFPA 72 and ULC CAN/ULC 536 standards.

# Typical Wiring

Modules will accept #18 AWG (0.75mm²), #16 (1.0mm²), #14 AWG (1.50mm²) and #12 AWG (2.5mm²) wire sizes.

Note: Sizes #16 AWG (1.0mm²) and #18 AWG (0.75mm²) are preferred for ease of installation. See Signature Loop Controller catalog sheet for detailed wiring requirement specifications.

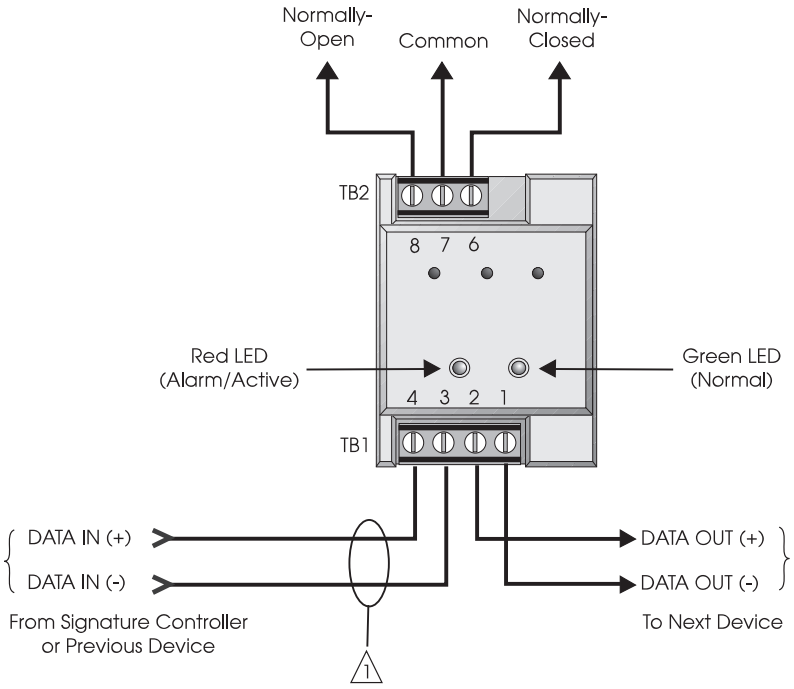


**SIGA-CR Control Relay**

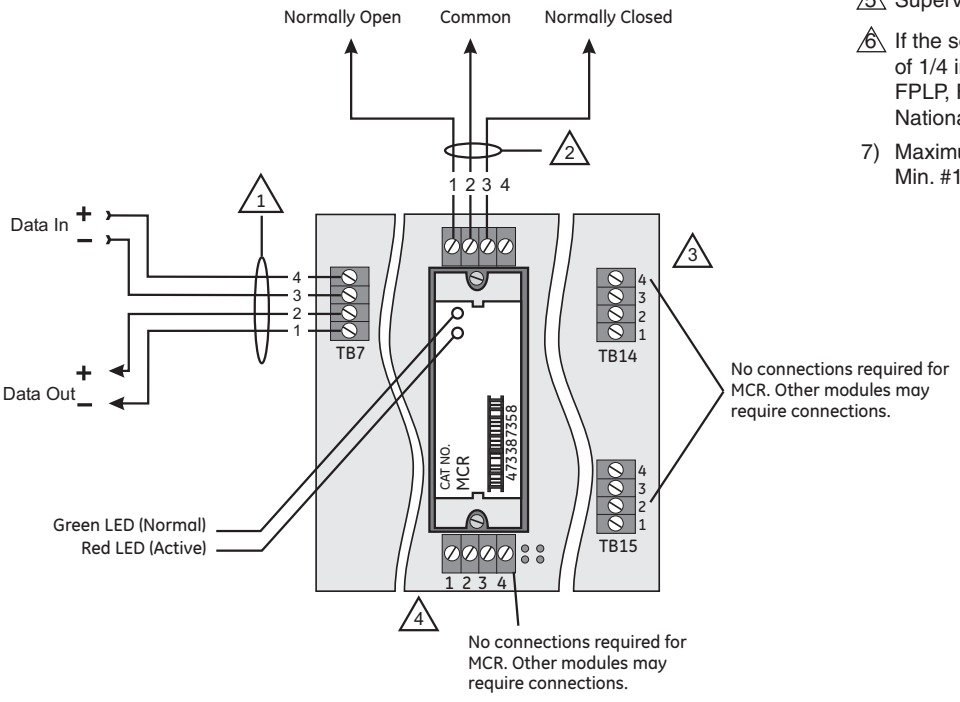


**SIGA-MCR Control Relay**

## Notes

1. Refer to Signature Loop Controller Installation Sheet for wiring specifications.
2. NFPA 72 requires that the SIGA-CR/SIGA-MCR be installed in the same room as the device it is controlling. This requirement may not apply in all markets. Check with your local AHJ for details.
3. The SIGA-UIO6R and the SIGA-UIO2R do not come with TB14.
4. The SIGA-UIO6 does not come with TB8 through TB13.
5. Supervised and power-limited.
6. If the source is nonpower-limited, maintain a space of 1/4 inch from power-limited wiring or use FPL, FPLP, FPLR, or an equivalent in accordance with the National Electrical Code.
7. Maximum #12 AWG (2.5mm²) wire. Min. #18 (0.75mm²).

# Typical Wiring

Modules will accept #18 AWG (0.75mm²), #16 (1.0mm²), #14 AWG (1.50mm²) and #12 AWG (2.50mm²) wire sizes.

Note: Sizes #16 AWG (1.0mm²) and #18 AWG (0.75mm²) are preferred for ease of installation. See Signature Loop Controller catalog sheet for detailed wiring requirement specifications.

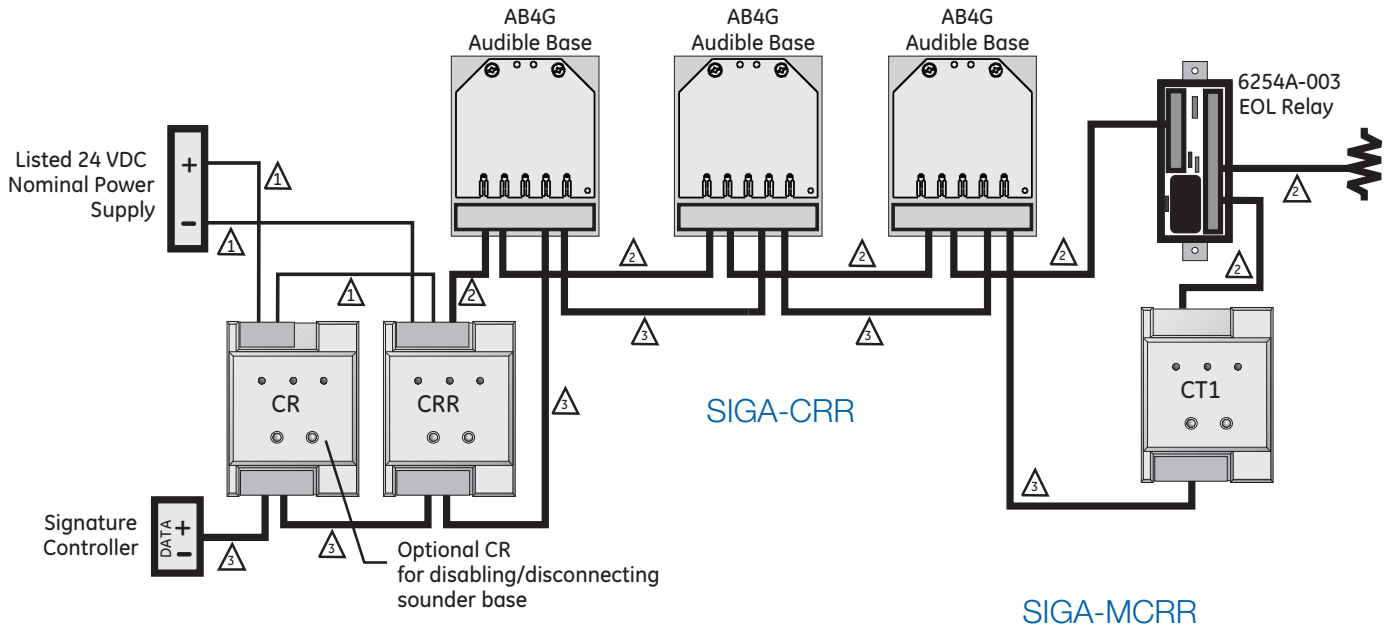


SIGA-MCRR

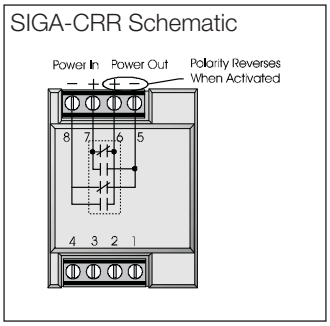


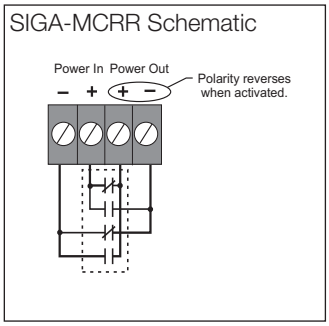


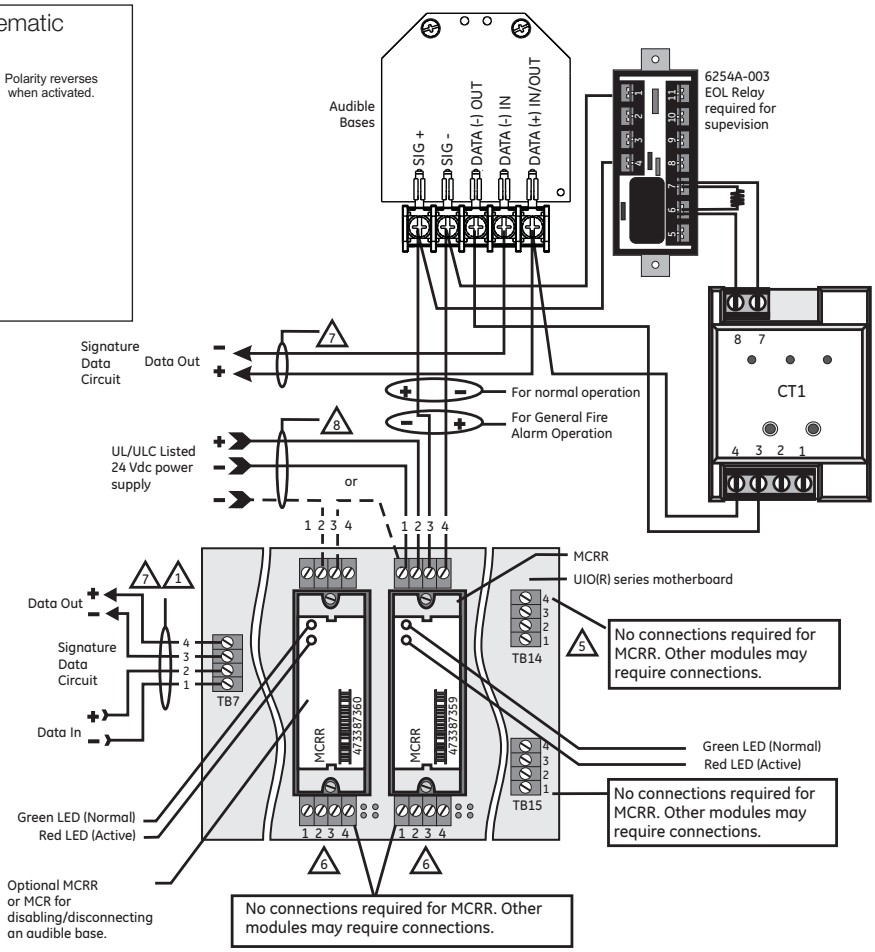


## Notes

1. Refer to the Signature controller installation sheet for wiring.
2. One Pair of Wires (24 Vdc power).
3. One Pair of Wires (Signature Data).
4. Single Wire (24 Vdc power).
5. The SIGA-UIO6R and the SIGA-UIO2R do not come with TB14.
6. The SIGA-UIO6 does not come with TB8 through TB13.
7. Supervised and power-limited.
8. If the source is nonpower-limited, maintain a space of 1/4 inch from power-limited wiring or use FPL, FPLP, FPLR, or an equivalent in accordance with the National Electrical Code.
9. Maximum #12 AWG (2.5 mm² ) wire; Minimum #18 AWG (0.75 mm² ).
10. End-of-Line Relay must monitor and report power supply trouble to control panel.
11. Class B Data wiring may be “T-tapped.”

# Specifications

28 31 01

| Catalog Number | SIGA-CR | SIGA-MCR | SIGA-CRR | SIGA-MCRR |
|---|---|---|---|---|
| Description | Control Relay | | Polarity Reversal Relay | |
| Type Code | Personality Code 8 (Factory Set) | | Personality Code 8 (Factory Set) | |
| Address Requirements | Uses 1 Module Address | | | |
| Operating Current | Standby = 100µA Activated = 100µA | | | |
| Operating Voltage | 15.2 to 19.95 Vdc (19 Vdc nominal) | | | |
| Relay Type and Rating | Form "C" 24 VDC = 2 amps (pilot duty) 120 Vac = 0.5 amps 220 Vac (non-UL) = 0.5 amps | | | |
| Mounting | North American 2½ inch (64 mm) deep 1-gang boxes and 1½ inch (38 mm) deep 4 inch square boxes with 1-gang covers and SIGA-MP mounting plates | Plugs into UIO2R, UIO6R or UIO6 Motherboards | North American 2½ inch (64 mm) deep 1-gang boxes and 1½ inch (38 mm) deep 4 inch square boxes with 1-gang covers and SIGA-MP mounting plates | Plugs into UIO2R, UIO6R or UIO6 Motherboards |
| Construction & Finish | High Impact Engineering Polymer | | | |
| Storage and Operating Environment | Operating Temperature: 32°F to 120°F (0°C to 49°C)<br>Storage Temperature: -4°F to 140°F (-20°C to 60°C) Humidity: 0 to 93% RH | | | |
| LED Operation | On-board Green LED - Flashes when polled On-board Red LED - Flashes when in alarm/active | | | |
| Compatibility | Use With: Signature Loop Controller | | | |
| Agency Listings | UL, ULC, CSFM, MEA | | | |

# Ordering Information

| Catalog Number | Description | Ship Weight - lbs (kg) |
|---|---|---|
| ★ SIGA-CR | Control Relay Module (Standard Mount) | 0.4 (0.15) |
| SIGA-MCR | Control Relay Module (UIO Mount) | 0.18 (0.08) |
| SIGA-CRR | Polarity Reversal Relay Module (Standard Mount) | 0.4 (0.15) |
| SIGA-MCRR | Polarity Reversal Relay Module (UIO Mount) | 0.18 (0.08) |
| **Related Equipment** | | |
| 27193-11 | Surface Mount Box - Red, 1-gang | 1 (0.6) |
| 27193-16 | Surface Mount Box - White, 1-gang | 1 (0.6) |
| SIGA-UIO2R | Universal Input-Output Module Board w/Riser Inputs - Two Module Positions | 0.32 (0.15) |
| SIGA-UIO6R | Universal Input-Output Module Board w/Riser Inputs - Six Module Positions | 0.62 (0.28) |
| SIGA-UIO6 | Universal Input-Output Module Board - Six Module Positions | 0.56 (0.25) |
| SIGA-AB4G | Audible (Sounder) Detector Base | 0.3 (0.15) |
| **Accessories** | | |
| MFC-A | Multifunction Fire Cabinet - Red, supports Signature Module Mounting Plates | 7.0 (3.1) |
| SIGA-MB4 | Transponder Mounting Bracket (allows for mounting two 1-gang modules in a 2-gang box) | 0.4 (0.15) |
| SIGA-MP1 | Signature Module Mounting Plate, 1 footprint | 1.5 (0.70) |
| SIGA-MP2 | Signature Module Mounting Plate, 1/2 footprint | 0.5 (0.23) |
| SIGA-MP2L | Signature Module Mounting Plate, 1/2 extended footprint | 1.02 (0.46) |

EDWARDS
A UTC Fire & Security Company

**Detection & alarm since 1872**

U.S.
T 888-378-2329
F 866-503-3996

Canada
Chubb-Edwards
T 519 376 2430
F 519 376 7258

Southeast Asia
T : +65 6391 9300
F : +65 6391 9306

India
T : +91 80 4344 2000
F : +91 80 4344 2050

Australia
T +61 3 9239 1200
F +61 3 9239 1299

Europe
T +32 2 725 11 20
F +32 2 721 86 13

Latin America
T 305 593 4301
F 305 593 4300

utcfireandsecurity.com

© 2010 UTC Fire & Security.
All rights reserved.

# Signature Series Overview

28 31 01

The Signature Series intelligent analog-addressable system from Edwards is an entire family of multi-sensor detectors and mounting bases, multiple-function input and output modules, network and non-network control panels, and user-friendly maintenance and service tools. Analog information from equipment connected to Signature devices is gathered and converted into digital signals. An onboard microprocessor in each Signature device measures and analyzes the signal and decides whether or not to input an alarm. The microprocessor in each Signature device provides four additional benefits – Self-diagnostics and History Log, Automatic Device Mapping, Stand-alone Operation and Fast, Stable Communication.

**Self-diagnostics and History Log** – Each Signature Series device constantly runs self-checks to provide important maintenance information. The results of the self-check are automatically updated and permanently stored in its non-volatile memory. This information is accessible for review any time at the control panel, PC, or using the SIGA-PRO Signature Program/Service Tool. The information stored in device memory includes:

- Device serial number, address, and type
- Time and date of last alarm
- Most recent trouble code logged by the detector — 32 possible trouble codes may be used to diagnose faults.

**Automatic Device Mapping** –The Signature Data Controller (SDC) learns where each device's serial number address is installed relative to other devices on the circuit. The SDC keeps a map of all Signature Series devices connected to it. The Signature Series Data Entry Program also uses the mapping feature. With interactive menus and graphic support, the wired circuits between each device can be examined. Layout or "as-built" drawing information showing branch wiring (T-taps), device types and their address are stored on disk for printing hard copy. This takes the mystery out of the installation. The preparation of as-built drawings is fast and efficient.

Device mapping allows the Signature Data Controller to discover:

- Unexpected additional device addresses
- Missing device addresses
- Changes to the wiring in the circuit.

Most Signature modules use a personality code selected by the installer to determine their actual function. Personality codes are downloaded from the SDC during system configuration and are indicated during device mapping.

**Standalone Operation** – A decentralized alarm decision by the device is guaranteed. Onboard intelligence permits the device to operate in standalone (degrade) mode. If Signature loop controller CPU communications fail for more than four seconds, all devices on that circuit go into standalone mode. The circuit acts like a conventional alarm receiving circuit. Each Signature device on the circuit continues to collect and analyze information from its slave devices. When connected to a panel utilizing standalone operation, modules with their "personality" set as alarm devices (IDC) will alarm should their slave alarm-initiating device activate.

EST
Life Safety & Communications

28 31 01

# Isolator Module

## SIGA-IM

STANTEC PROJECT #: 110126045

SUBMITTAL # ELE-002 Fire Alarm Systems

This review by Stantec is for general conformance with the design concept of Stantec's design of the:

☐ Architectural ☑ Electrical
☐ Structural ☐ Other
☐ Mechanical

component(s) only and does not mean that Stantec has verified or approves the shop drawing(s). The Contractor remains solely responsible for the shop drawing(s) and this review by Stantec does not relieve the Contractor of the Contractor's responsibility for errors or omissions in the shop drawing(s) or for meeting all requirements of the contract documents. This review does not mean that Stantec approves the detailed design inherent in the shop drawing, responsibility for which shall remain with the Contractor submitting same, nor does this review mean that Stantec accepts any deviation of the shop drawing(s) from the contract documents. The Contractor is responsible for confirming all dimensions and correlating them at the job site, for all construction means, methods and techniques, and for coordination of construction work of all trades, including coordination of all shop drawings.

Stantec

☐ REVIEWED
☑ REVIEWED, AS NOTED
☐ REVISE AND RESUBMIT
☐ NOT REVIEWED

DATE June 20, 2018

BY Chester Martinez, E.I.T.



Patented

S3424

7300-1657: 0121

FM APPROVED

MEA

Application Notes Available

Provide isolators approved for the location in which they are installed as per the electrical drawings.

## Overview

The SIGA-IM Isolator Module is part of EST's Signature Series system. This intelligent device enables part of the Signature data loop to continue operating should a short circuit occur. The module can be wired into a Class A data loop at any point.

If a fault occurs, the isolator cuts power to all devices beyond the isolator on the loop as follows:

- a short on the line causes all isolators to open within 23 msec.
- at 10 msec intervals, beginning on one side of the Class A circuit nearest the loop controller, the isolators close to provide the next isolator down the line with power.
- when the isolator next to the short closes, it reopens within 10 msec.

Once activated, the line fault isolator continuously checks the faulted side of the loop to determine if the short still exists. When the fault is corrected and system reset, the module automatically restores the entire data loop to the normal condition.

The microprocessor in every Signature module provides at least three important benefits — Self-diagnostics and History Log, Automatic Device Mapping, and Fast, Stable Communication.

**Self-diagnostics and History Log** - Each Signature Series module constantly runs self-checks to provide important maintenance information. This information is automatically updated and permanently stored in the module's non-volatile memory and is accessible for review any time using the SIGA-PRO Signature Program / Service Tool.

**Automatic Device Mapping** - The Signature loop controller learns keeps a map where each device's serial number address is installed relative to other devices on the data circuit.

**Fast Stable Communication** - Built-in intelligence means less information needs to be sent between the module and the loop controller. Other than regular supervisory polling response, the module only needs to communicate with the loop controller when it has something new to report.

## Standard Features

- **Automatic device mapping**
  Each module transmits wiring information to the loop controller regarding its location with respect to other devices on the circuit.
- **Electronic addressing**
  Addresses are downloaded and permanently stored from a PC, or the SIGA-PRO Signature Program / Service Tool. There are no switches or dials to set.
- **Ground fault detection by address**
  Detects ground faults right down to the device level.
- **2-gang mounting**
- **Designed to ISO 9001 standards**

## Testing & Maintenance

The module's automatic self-diagnosis identifies when it is defective and causes a trouble message. The user-friendly maintenance program shows the current state of each module and other pertinent messages. Single modules may be turned off (deactivated) temporarily, from the control panel. Availability of maintenance features is dependent on the fire alarm system used. Scheduled maintenance (Regular or Selected) for proper system operation should be planned to meet the requirements of the Authority Having Jurisdiction (AHJ). Refer to current NFPA 72 and ULC CAN/ ULC 536 standards.

**Warnings & Cautions**
This module will not operate without electrical power. As fires frequently cause power interruption, we suggest you discuss further safeguardwith your fire protection specialist.

## Typical Wiring and Installation

The SIGA-IM module mounts to North American 2-1/2 inch (64 mm) deep 2-gang boxes and 1-1/2 inch (38 mm) deep 4 inch square boxes with 2 gang covers and SIGA-MP mounting plates. The module will accept #18 AWG (0.75mm$^2$), #16 (1.0mm$^2$), #14 AWG (1.50mm$^2$), and #12 AWG (2.50mm$^2$) wire sizes. *Note: Sizes #16 AWG (1.0mm$^2$) and #18 AWG (0.75mm$^2$) are preferred for ease of installation. See Signature Loop Controller catalog sheet for detailed wiring requirement specifications.*

Edwards recommends that this module be installed according to latest recognized edition of national and local fire alarm codes.

## Application

**This module should only be used on Class A circuits.** The operation of the SIGA-IM is determined by its hardware type code and is assigned at the factory. No user configuration is required.

## Compatibility

These modules are part of EST's Signature Series intelligent processing and control platform. They are compatible with EST3, EST3X and iO Series control panels.

## Typical Wiring

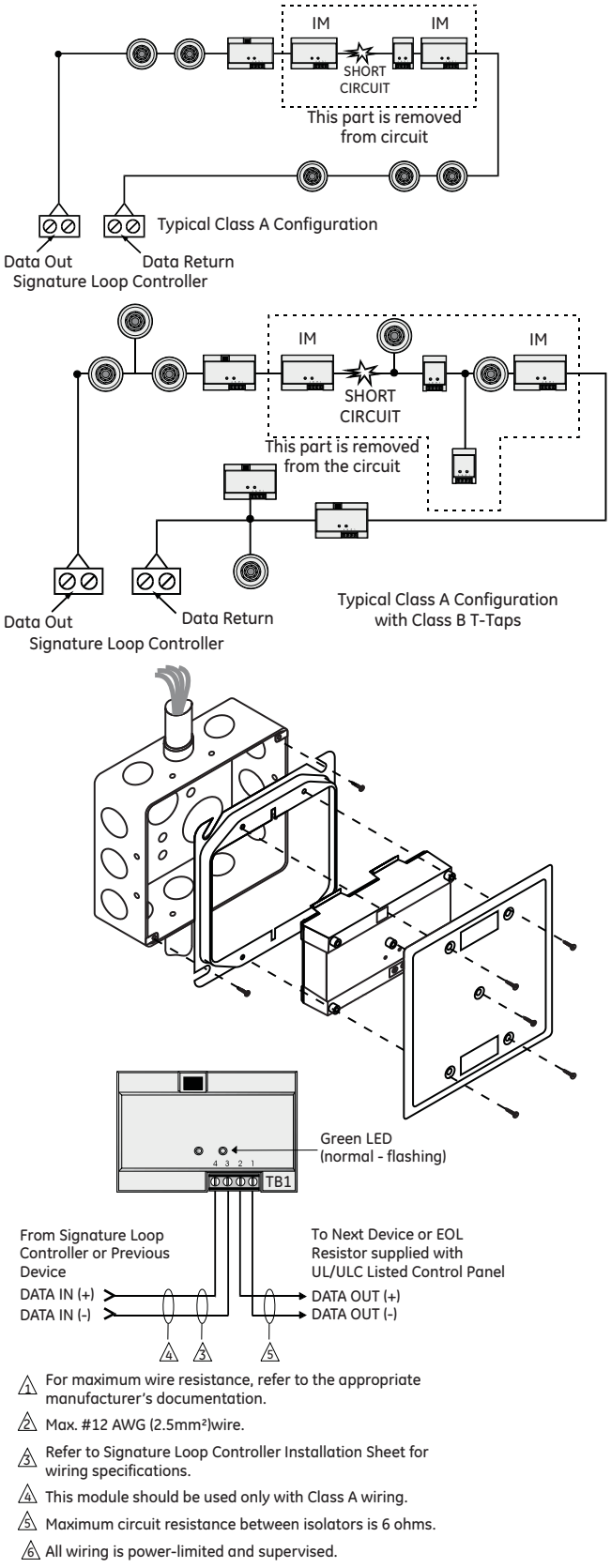


1. For maximum wire resistance, refer to the appropriate manufacturer's documentation.
2. Max. #12 AWG (2.5mm²)wire.
3. Refer to Signature Loop Controller Installation Sheet for wiring specifications.
4. This module should be used only with Class A wiring.
5. Maximum circuit resistance between isolators is 6 ohms.
6. All wiring is power-limited and supervised.

## Specifications

| | |
|---|---|
| Description | Isolator Module - factory set hardware type code |
| Address Requirements | Uses One Detector Address |
| Circuit Resistance | Six ohms maximum between isolators |
| Operating Current | Standby = 45µA; Activated = 45µA |
| Operating Voltage | 15.2 to 19.95 Vdc (19 Vdc nominal) |
| Construction & Finish | High Impact Engineering Polymer 2-gang front plate - White Finish |
| Storage Environment | Temperature: -4°F to 140°F (-20°C to 60°C) |
| Operating Environment | Temperature: 32°F to 120°F (0°C to 49°C); Humidity: 0 to 93% RH |
| LED Operation | On-board Green LED - Flashes when polled (normal) |
| Compatibility | Use with: Signature Loop Controller |
| Agency Listings | UL, ULC, CSFM, MEA, FM |

## Ordering Information 28 31 01

| Catalog Number | Description | Ship Wt. lb (kg) |
|---|---|---|
| ★ SIGA-IM | Fault Isolator Module - UL/ULC Listed | .5 (.23) |
| **Accessories** | | |
| 27193-21 | Surface Mount Box - 2-gang RED | 1 (.4) |
| 27193-26 | Surface Mount Box - 2-gang WHITE | |
| MFC-A | Multifunction Fire Cabinet - Red, supports Signature Module Mounting Plates | 7.0 (3.1) |
| SIGA-MP1 | Signature Module Mounting Plate, 1 footprint | 1.5 (0.70) |
| SIGA-MP2 | Signature Module Mounting Plate, 1/2 footprint | 0.5 (0.23) |
| SIGA-MP2L | Signature Module Mounting Plate, 1/2 extended footprint | 1.02 (0.46) |

Contact us...

Email: edwards.fire@fs.utc.com
Web: *www.est-fire.com*

EST is an **EDWARDS** brand.

1016 Corporate Park Drive
Mebane, NC 27302

In Canada, contact Chubb Edwards...
Email: inquiries@chubbedwards.com
Web: *www.chubbedwards.com*

© 2013 UTC Fire & Security Americas Corporation, Inc. All rights reserved. Specifications subject to change without notice. Edwards is part of UTC Climate, Controls & Security, a unit of United Technologies Corporation.

28 31 01

# Manual Pull Stations

## SIGA-270, SIGA-270P, SIGA-278




SIGA-270 SERIES

MEA

Patented

STANTEC PROJECT #: 110126045 SUBMITTAL # ELE-002 Fire Alarm Systems

This review by Stantec is for general conformance with the design concept of Stantec's design of the:
☐ Architectural ☐ Structural ☐ Mechanical ☑ Electrical ☐ Other

component(s) only and does not mean that Stantec has verified or approves the shop drawing(s). The Contractor remains solely responsible for the shop drawing(s) and this review by Stantec does not relieve the Contractor of the Contractor's responsibility for errors or omissions in the shop drawing(s) or for meeting all requirements of the contract documents. This review does not mean that Stantec approves the detailed design inherent in the shop drawing, responsibility for which shall remain with the Contractor submitting same, nor does this review mean that Stantec accepts any deviation of the shop drawing(s) from the contract documents. The Contractor is responsible for confirming all dimensions and correlating them at the job site, for all construction means, methods and techniques, and for coordination of construction work of all trades, including coordination of all shop drawings.

Stantec

☐ REVIEWED
☑ REVIEWED, AS NOTED
☐ REVISE AND RESUBMIT
☐ NOT REVIEWED

DATE June 20, 2018

BY Chester Martinez, E.I.T.

Provide pull stations approved for the location in which they are installed as per the electrical drawings.

## Overview

The SIGA-270 and SIGA-278 series Manual Pull Stations are part of EST's Signature Series system. The SIGA-270 Fire Alarm Manual Pull Stations feature our very familiar teardrop shape. They are made from die-cast zinc and finished with red epoxy powder-coat paint complemented by aluminum colored stripes and markings. With positive pull-lever operation, one pull on the station handle breaks the glass rod and turns in a positive alarm, ensuring protection plus fool-proof operation. Presignal models (SIGA-270P) are equipped with a general alarm (GA) keyswitch for applications where two stage operation is required. The up-front highly visible glass rod discourages tampering, but is not required for proper operation.

EST's double action single stage SIGA-278 station is a contemporary style manual station made from durable red colored lexan. To initiate an alarm, first lift the upper door marked "LIFT THEN PULL HANDLE", then pull the alarm handle.

## Standard Features

***Note:*** *Some features described here may not be supported by all control systems. Check your control panel's Installation and Operation Guide for details.*

- **Traditional familiar appearance**
  SIGA-270 models feature our familiar teardrop design with simple positive pull action and sturdy die-cast metal body.
- **One stage (GA), two stage (pre-signal), and double action models**
  SIGA-270 models are available for one or two stage alarm systems. The single stage double action SIGA-278 features a rugged Lexan housing with keyed reset mechanism.
- **Break glass operation**
  An up-front visible glass rod on the SIGA-270 discourages tampering.
- **Intelligent device with integral microprocessor**
  All decisions are made at the station allowing lower communication speed while substantially improving control panel response time. Less sensitive to line noise and loop wiring properties; twisted or shielded wire is not required.
- **ADA Compliant**
  Meets ADA requirements for manual pull stations.
- **Electronic Addressing with Non-volatile memory**
  Permanently stores programmable address, serial number, type of device, and job number. Automatically updates historic information including hours of operation, last maintenance date, number of alarms and troubles, and time and date of last alarm.
- **Automatic device mapping**
  Each station transmits wiring information to the loop controller regarding its location with respect to other devices on the circuit.
- **Stand-alone operation**
  The station inputs an alarm even if the loop controller's polling interrogation stops.
- **Diagnostic LEDs**
  Status LEDs; flashing GREEN shows normal polling; flashing RED shows alarm state.
- **Designed for high ambient temperature operation**
  Install in ambient temperatures up to 120 °F (49 °C).

## Application

The operating characteristics of the fire alarm stations are determined by their sub-type code or "Personality Code". NORMALLY-OPEN ALARM - LATCHING (Pesonality Code 1**)** is assigned by the factory; no user configuration is required. The device is configured for Class B IDC operation. An ALARM signal is sent to the loop controller when the station's pull lever is operated. The alarm condition is latched at the station.

## Compatibility

Signature Series manual stations are compatible only with EST's Signature Loop Controller.

## Warnings & Cautions

This device will not operate without electrical power. As fires frequently cause power interruption, we suggest you discuss further safeguards with your local fire protection specialist.

## Testing & Maintenance

To test (or reset) the station simply open the station and operate the exposed switch. The SIGA-270 series are opened with a tool; the SIGA-278 requires the key which is supplied with that station.

The station's automatic self-diagnosis identifies when it is defective and causes a trouble message. The user-friendly maintenance program shows the current state of each Signature series device and other pertinent messages. Single devices may be deactivated temporarily, from the control panel. Availability of maintenance features is dependent on the fire alarm system used.

Scheduled maintenance (Regular or Selected) for proper system operation should be planned to meet the requirements of the Authority Having Jurisdiction (AHJ). Refer to current NFPA 72 and ULC CAN/ULC 536 standards.

## Typical Wiring

28 31 01

The fire alarm station's terminal block accepts #18 AWG (0.75mm$^2$) to #12 AWG (2.5mm$^2$) wire sizes. See Signature Loop Controller catalog sheet for detailed wiring requirement specifications.

### Wiring Notes

1. Refer to Signature Loop Controller manual for maximum wire distance.
2. All wiring is power limited and supervised.

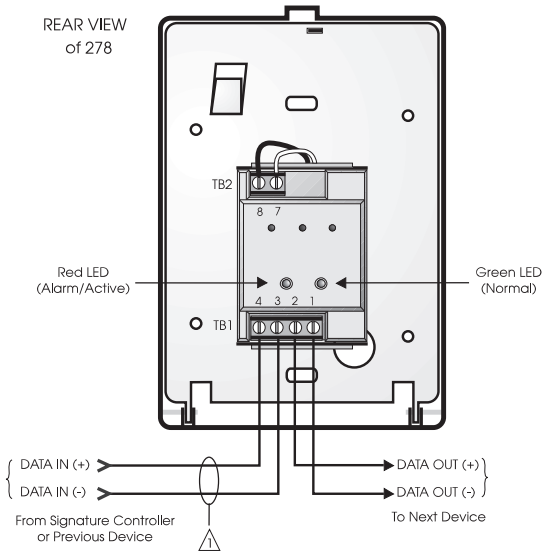


**Figure 4. Single Stage Systems**

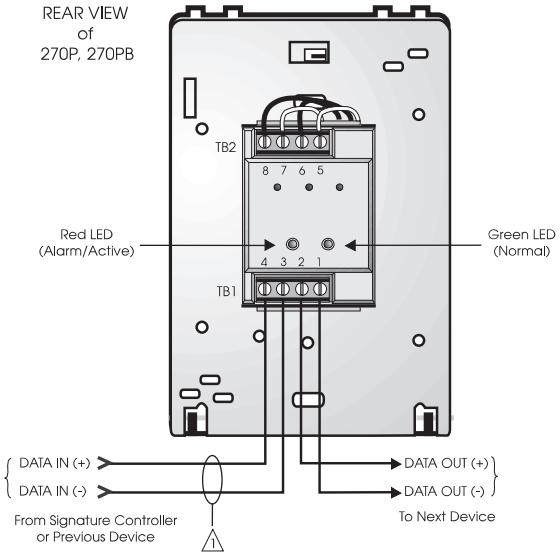


**Figure 5. Two Stage Systems**

**Single-stage** Signature Series fire alarm manual pull stations mount to North American 2½ inch (64 mm) deep 1-gang boxes.

**Two stage** presignal (270P) models require 1½ inch (38 mm) deep 4-inch square boxes with 1-gang, ½-inch raised covers. Openings must be angular. *Rounded openings are not acceptable.* Recommended box: Steel City Model 52-C-13; in Canada, use Iberville Model CI-52-C-49-1/2.

**All models** include terminals are suited for #12 to #18 AWG (2.5 $mm^2$ to 0.75 $mm^2$) wire size. Edwards recommends that these fire alarm stations be installed according to latest recognized edition of national and local fire alarm codes.

**Electronic Addressing:** The loop controller electronically addresses each manual station, saving valuable time during system commissioning. Setting complicated switches or dials is not required. Each station has its own unique serial number stored in its on-board memory. The loop controller identifies each device on the loop and assigns a "soft" address to each serial number. If desired, the stations can be addressed using the SIGA-PRO Signature Program/Service Tool.

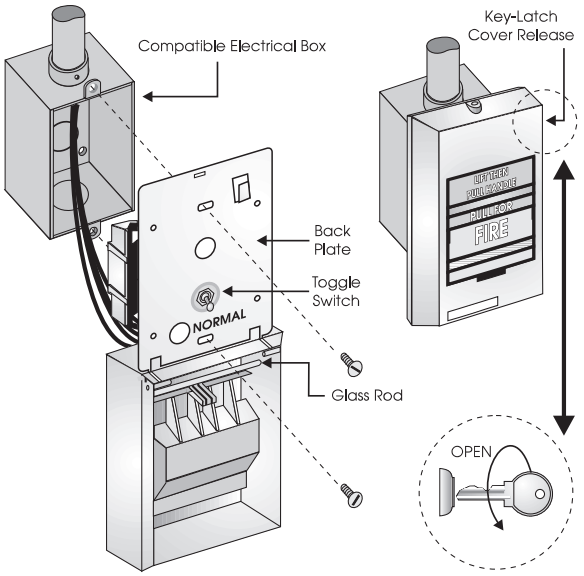


**Figure 1. SIGA-278 installation**

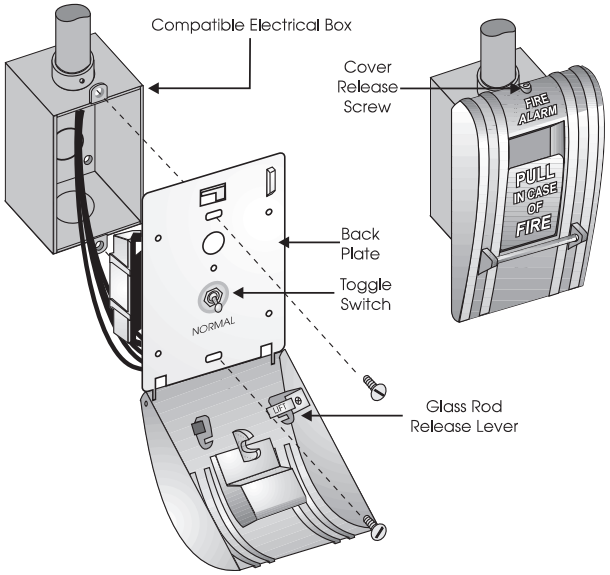


**Figure 2. SIGA-270, SIGC-270F, SIGC-270B installation**

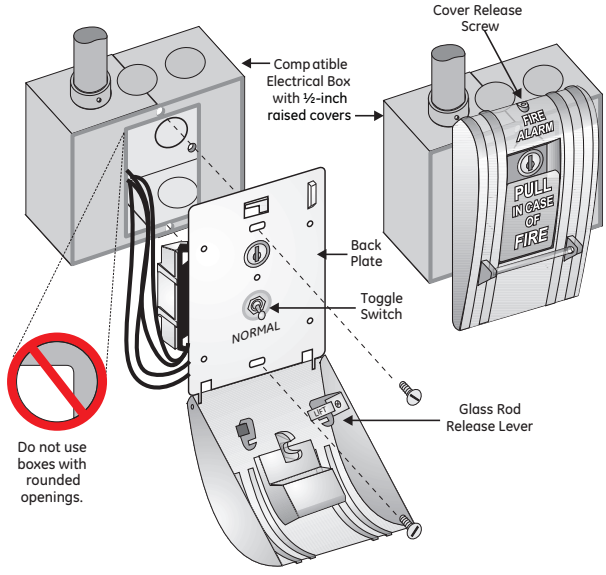


**Figure 3. SIGA-270P, SIGC-270PB installation**

EDWARDS
A UTC Fire & Security Company

**Detection & alarm since 1872**

**U.S.**
**T 888-378-2329**
**F 866-503-3996**

**Canada**
**Chubb-Edwards**
**T 519 376 2430**
**F 519 376 7258**

**Southeast Asia**
**T : +65 6391 9300**
**F : +65 6391 9306**

**India**
**T : +91 80 4344 2000**
**F : +91 80 4344 2050**

**Australia**
**T +61 3 9239 1200**
**F +61 3 9239 1299**

**Europe**
**T +32 2 725 11 20**
**F +32 2 721 86 13**

**Latin America**
**T 305 593 4301**
**F 305 593 4300**

**utcfireandsecurity.com**

**© 2010 UTC Fire & Security.**
**All rights reserved.**

## Specifications

| Catalog Number | SIGA-270, SIGC-270F, SIGC-270B | SIGA-270P, SIGC-270PB | SIGA-278 |
|---|---|---|---|
| Description | Single Action - One Stage | Single Action -Two Stage (Presignal) | Double Action - One Stage |
| Addressing Requirements | Uses 1 Module Address | Uses 2 Module Addresses | Uses 1 Module Address |
| Operating Current | Standby = 250µA Activated = 400µA | Standby = 396µA Activated = 680µA | Standby = 250µA Activated = 400µA |
| Construction & Finish | Diecast Zinc - Red Epoxy with aluminum markings | | Lexan - Red with white markings |
| Type Code | Factory Set | | |
| Operating Voltage | 15.2 to 19.95 Vdc (19 Vdc nominal) | | |
| Storage and Operating Environment | Operating Temperature: 32ºF to 120ºF (0ºC to 49ºC) Storage Temperature: -4ºF to 140ºF (-20ºC to 60ºC) Humidity: 0 to 93% RH | | |
| LED Operation | On-board Green LED - Flashes when polled On-board Red LED - Flashes w hen in alarm Both LEDs - Glow steady when in alarm (stand-alone) | | |
| Compatibility | Use With: Signature Loop Controller | | |
| Agency Listings | UL, ULC (note 1), MEA, CSFM | | |

***Note:*** *SIGC-270F, SIGC-270B and SIGC-270PB are ULC listed only. Suffix "F" indicates French markings. Suffix "B" indicates English/French biling ual markings.*

## Ordering Information

| | Catalog Number | Description | Ship Wt. lbs (kg) |
|---|---|---|---|
| ★ | SIGA-270 | One Stage Fire Alarm Station, English Markings - UL/ULC Listed | 1 (0.5) |
| | SIGC-270F | One Stage Fire Alarm Station, French Markings - ULC Listed | |
| | SIGC-270B | One Stage Fire Alarm Station, French/English Markings - ULC Listed | |
| | SIGA-270P | Two Stage (Presignal) Fire Alarm Station, English Markings - UL/ULC Listed | |
| | SIGC-270PB | Two Stage (Presignal) Fire Alarm Station, French/English Markings - ULC Listed | |
| | SIGA-278 | Double Action (One Stage) Fire Alarm Station, English Markings - UL/ULC Listed | |

| Accessories | | |
|---|---|---|
| 32997 | GA Key w/Tag - for pre-signal station (CANADA ONLY) | 0.1 (.05) |
| 276-K2 | GA Key - for pre-signal station (USA ONLY) | |
| 276-K1 | Station Reset Key, Supplied with all Key Reset Stations | |
| 27165 | 12 Glass Rods - for SIGA-270 series (CANADA ONLY) | |
| 270-GLR | 20 Glass Rods - for SIGA-270 series (USA ONLY) | |
| 276-GLR | 20 Glass Rods - for SIGA-278 series | |
| 276B-RSB | Surface Mount Box, Red - for SIGA pull stations | 1 (0.6) |

EST™
Life Safety & Communications

STANTEC PROJECT #: 110126045
SUBMITTAL # ELE-002 Fire Alarm Systems

This review by Stantec is for general conformance with the design concept of Stantec's design of the:
☐ Architectural ☐ Structural ☐ Mechanical ☑ Electrical ☐ Other

component(s) only and does not mean that Stantec has verified or approves the shop drawing(s). The Contractor remains solely responsible for the shop drawing(s) and this review by Stantec does not relieve the Contractor of the Contractor's responsibility for errors or omissions in the shop drawing(s) or for meeting all requirements of the contract documents. This review does not mean that Stantec approves the detailed design inherent in the shop drawing, responsibility for which shall remain with the Contractor submitting same, nor does this review mean that Stantec accepts any deviation of the shop drawing(s) from the contract documents. The Contractor is responsible for confirming all dimensions and correlating them at the job site, for all construction means, methods and techniques, and for coordination of construction work of all trades, including coordination of all shop drawings.

Stantec

☑ REVIEWED
☐ REVIEWED, AS NOTED
28 31 01
☐ REVISE AND RESUBMIT
☐ NOT REVIEWED
DATE June 20, 2018
BY Chester Martinez, E.I.T.

# Field Configurable Horns and Strobes

## Genesis Series

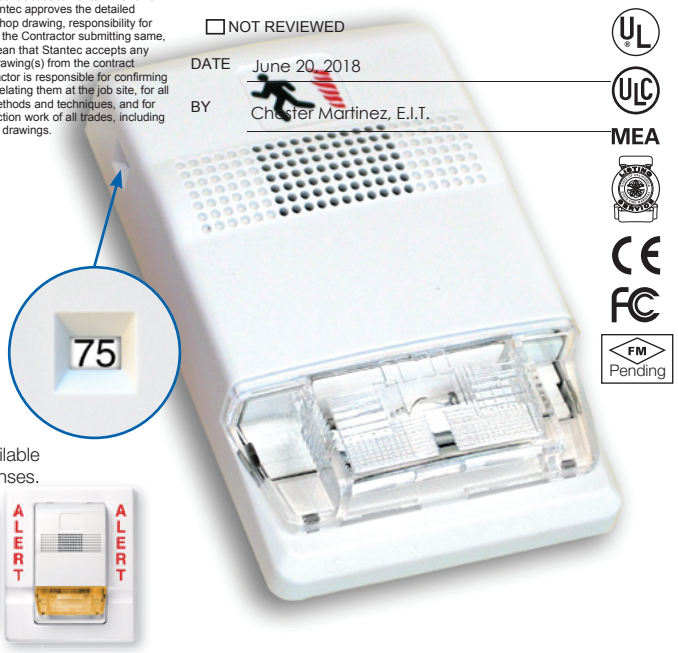


ECS/MNS appliances available with clear or amber lenses.




## Overview

The Genesis line of fire alarm and mass notification/emergency communications (ECS/MNS) signals are among the smallest, most compact audible-visible life safety signaling devices in the world. About the size of a deck of playing cards, these devices are designed to blend with any decor.

Thanks to patented breakthrough technology, Edwards Genesis strobes do not require bulky specular reflectors and lenses. Instead, an exclusive cavity design conditions light to produce a highly controlled distribution pattern. Significant development efforts employing this new technology have given rise to a new benchmark in strobe performance – FullLight technology.

FullLight strobe technology produces a smooth light distribution pattern without the spikes and voids characteristic of specular reflectors. This ensures the entire coverage area receives consistent illumination from the strobe flash. As a result, Genesis strobes with FullLight technology go well beyond the UL-1971 and ULC-S526 light distribution requirements.

Genesis strobes and horn-strobes offer selectable candela output by means of a conveniently-located switch on the side of the device. Models are also available that offer fixed 15/75 cd output. The candela output setting remains clearly visible even after final installation, yet it stays locked in place to prevent unauthorized tampering.

Genesis ECS/MNS appliances offer emergency signaling with clear or amber lenses and with optional ALERT housing labels. They are ideal for applications that require differentiation between fire alarm and mass notification alerts.

## Standard Features

- **Unique low-profile design**
  - The most compact UL-1971/ULC-S526 listed strobe available
  - Ultra-slim – protrudes less than one inch
  - Attractive appearance
  - No visible mounting screws
- **Four field-configurable options in one device**
  - Select 15, 30, 75, or 110 cd strobe output
  - Select high (default) or low dB horn output
  - Select temporal (default) or steady horn output
  - Select public mode flash rate (default) or private mode temporal flash
- **Fixed 15/75 cd model available**
- **ECS/MNS models available**
- **Easy to install**
  - Fits standard 1-gang electrical boxes – no trim plate needed
  - Optional trim plate accommodates oversized openings
  - Pre-assembled with captive hardware
  - #12 AWG terminals – ideal for long runs or existing wiring
- **Unparalleled performance**
  - Industry's most even light distribution
  - Meets tough synchronizing standards for strobes
  - Single microprocessor controls both horn and strobe
  - Independent horn control over a single pair of wires
  - Highly regulated in-rush current
  - Multiple frequency tone improves sound penetration
  - Field-programmable temporal strobe output option

## Application

Genesis strobes are UL 1971-listed for use indoors as wall-mounted public-mode notification appliances for the hearing impaired. Prevailing codes require strobes to be used where ambient noise conditions exceed 105 dBA (87dBA in Canada), where occupants use hearing protection, and in areas of public accommodation as defined in the *Americans with Disabilities Act (see application notes – USA)*.

Combination horn-strobe signals must be installed in accordance with guidelines established for strobe devices. Consult with your Authority Having Jurisdiction for details.

All Genesis strobes exceed UL synchronization requirements (within 10 milliseconds over a two-hour period) when used with a synchronization source. Synchronization is important in order to avoid epileptic sensitivity.

**WARNING:** These devices will not operate without electrical power. As fires frequently cause power interruptions, further safeguards such as backup power supplies may be required.

### Horns

Genesis horn output reaches as high as 99 dB and features a unique multiple frequency tone that results in excellent sound penetration and an unmistakable warning of danger. Horns may be configured for either coded or non-coded signal circuits. They can also be set for low dB output with a jumper cut that reduces horn output by about 5 dB. Horn-only models may be ceiling-mounted or wall-mounted.

The suggested sound pressure level for each signaling zone used with alarm signals is at least 15 dB above the average ambient sound level, or 5 dB above the maximum sound level having a duration of at least 60 seconds, whichever is greater, measured 5 feet (1.5 m) above the floor. The average ambient sound level is, A-weighted sound pressure measured over a 24-hour period.

Doubling the distance from the signal to the ear will theoretically result in a 6 dB reduction of the received sound pressure level. The actual effect depends on the acoustic properties of materials in the space. A 3 dBA difference represents a barely noticeable change in volume.

### ECS/MNS Applications

Genesis ECS/MNS strobe appliances bring the same high-performance fire alarm features and unobtrusive design to mass notification applications. Available with amber lenses and optional ALERT housing labels, they are ideal for applications that require differentiation between fire alarm and mass notification alerts.

## Installation

Genesis horns and strobes mount to any standard one-gang surface or flush electrical box. Matching optional trim plates are used to cover oversized openings and can accommodate one-gang, two-gang, four-inch square, or octagonal boxes, and European 100 mm square.




**Genesis Horn/Strobe with optional trim plate**

All Genesis signals come pre-assembled with captive mounting screws for easy installation. Two tabs at the top of the signal unlock the cover to reveal the mounting hardware. The shallow depth of Genesis devices leaves ample room behind the signal for extra wiring. Once installed with the cover in place, no mounting screws are visible.

### Field Configuration

Temporal horn and horn-strobe models are factory set to sound in a **three-pulse temporal pattern**. Units may be configured for use with coded systems by cutting a jumper on the circuit board. This results in a **steady output** that can be turned on and off (coded) as the system applies and removes power to the signal circuit. A Genesis Signal Master is required when horn-strobe models are configured for coded systems. Non-temporal, horn-only models sound a steady tone.

Genesis clear strobes and horn-strobes are shipped from the factory ready for use as **UL 1971 compliant** signals for public mode operation. These signals may be configured for **temporal flash** by cutting a jumper on the circuit board. This battery-saving feature is intended for private mode signaling only.

Genesis clear strobes and horn-strobes may be set for **15, 30, 75, or 110 candela output**. The output setting is changed by simply opening the device and sliding the switch to the desired setting. The device does not have to be removed to change the output setting. The setting remains visible through a small window on the side of the device after the cover is closed.

Horns and horn-strobes are factory set for **high dB output**. **Low dB output** may be selected by cutting a jumper on the circuit board. This reduces the output by about 5 dB.

## Wiring

Field wiring terminals accommodate #18 to #12 AWG (0.75 mm² to 2.5 mm²) wiring. Horns, strobes, and combination horn-strobes are interconnected with a single pair of wires as shown below.

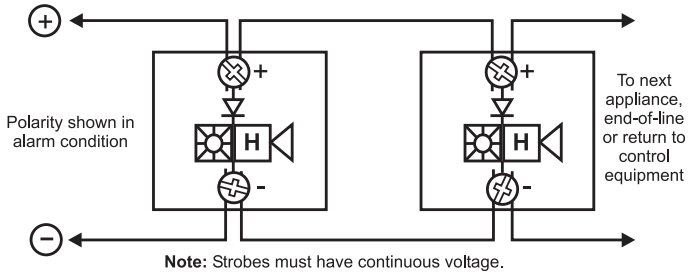


**Note:** Strobes must have continuous voltage.

# Current Draw

28 31 01

## Strobes, Horn-Strobes

### Multi-cd Wall Strobes (G1-VM)

| UL Rating | 15 cd* RMS | 30 cd* RMS | 15/75 cd** RMS | 75 cd* RMS | 110 cd* RMS |
|---|---|---|---|---|---|
| 16 Vdc | 103 | 141 | 152 | 255 | 311 |
| 16 Vfwr | 125 | 179 | 224 | 346 | 392 |

*G1-VM multi-cd; **G1F-V1575 fixed 15/75 cd

| Typical Current | 15 cd RMS | 30 cd RMS | 15/75 RMS | 75 cd RMS | 110 cd RMS |
|---|---|---|---|---|---|
| 16 Vdc | 85 | 127 | 150 | 245 | 285 |
| 20 Vdc | 71 | 98 | 123 | 188 | 240 |
| 24 Vdc | 59 | 82 | 104 | 152 | 191 |
| 33 Vdc | 46 | 64 | 84 | 112 | 137 |
| 16 Vfwr | 119 | 169 | 223 | 332 | 376 |
| 20 Vfwr | 103 | 143 | 189 | 253 | 331 |
| 24 Vfwr | 94 | 129 | 169 | 218 | 262 |
| 33 Vfwr | 87 | 112 | 148 | 179 | 205 |

### Wall Temporal Horn-strobes – High dB Setting

| UL Rating | 15 cd* RMS | 30 cd* RMS | 15/75 cd** RMS | 75 cd* RMS | 110 cd* RMS |
|---|---|---|---|---|---|
| 16 Vdc | 129 | 167 | 172 | 281 | 337 |
| 16 Vfwr | 176 | 230 | 269 | 397 | 443 |

*G1-HDVM multi-cd
**G1F-HDV1575 fixed 15/75 cd

| Typical Current | 15 cd RMS | 30 cd RMS | 15/75 RMS | 75 cd RMS | 110 cd RMS |
|---|---|---|---|---|---|
| 16 Vdc | 102 | 135 | 160 | 246 | 309 |
| 20 Vdc | 88 | 109 | 137 | 193 | 248 |
| 24 Vdc | 81 | 94 | 122 | 161 | 203 |
| 33 Vdc | 74 | 72 | 106 | 124 | 154 |
| 16 Vfwr | 144 | 182 | 247 | 352 | 393 |
| 20 Vfwr | 141 | 162 | 220 | 274 | 362 |
| 24 Vfwr | 136 | 152 | 203 | 235 | 282 |
| 33 Vfwr | 125 | 144 | 196 | 201 | 232 |

### Wall Temporal Horn-strobes – Low dB Setting

| UL Rating | 15 cd* RMS | 30 cd* RMS | 15/75 cd** RMS | 75 cd* RMS | 110 cd* RMS |
|---|---|---|---|---|---|
| 16 Vdc | 122 | 160 | 146 | 274 | 330 |
| 16 Vfwr | 162 | 216 | 231 | 383 | 429 |

*G1-HDVM multi-cd
**G1F-HDV1575 fixed 15/75 cd

| Typical Current | 15 cd RMS | 30 cd RMS | 15/75 RMS | 75 cd RMS | 110 cd RMS |
|---|---|---|---|---|---|
| 16 Vdc | 96 | 130 | 158 | 243 | 302 |
| 20 Vdc | 79 | 104 | 133 | 189 | 241 |
| 24 Vdc | 68 | 88 | 119 | 156 | 197 |
| 33 Vdc | 56 | 71 | 100 | 118 | 146 |
| 16 Vfwr | 128 | 180 | 241 | 344 | 389 |
| 20 Vfwr | 118 | 157 | 213 | 266 | 343 |
| 24 Vfwr | 113 | 144 | 195 | 230 | 279 |
| 33 Vfwr | 112 | 137 | 182 | 197 | 226 |

## Horns

### Wall or Ceiling Mounted Temporal Horns (G1-HD)

| UL Rating | High dB (RMS) | Low dB (RMS) |
|---|---|---|
| 16 Vdc | 26 | 19 |
| 24 Vdc | 36 | 27 |
| 33 Vdc | 41 | 33 |
| 16 Vfwr | 51 | 37 |
| 24 Vfwr | 69 | 52 |
| 33 Vfwr | 76 | 70 |

| Typical Current | High dB RMS | Low dB RMS |
|---|---|---|
| 16 Vdc | 22 | 17 |
| 20 Vdc | 24 | 19 |
| 24 Vdc | 27 | 22 |
| 33 Vdc | 32 | 26 |
| 16 Vfwr | 34 | 30 |
| 20 Vfwr | 40 | 34 |
| 24 Vfwr | 45 | 38 |
| 33 Vfwr | 52 | 47 |

### Wall or Ceiling Mounted Horns (G1-P)

| UL Designation | Voltage Range | Max. Current, RMS |
|---|---|---|
| Regulated 24 Vdc | 16 - 33 Vdc | 13 mA |
| 24 fwr | 16 - 33 Vfwr | 11 mA |

| Typical Current | RMS |
|---|---|
| 24 Vdc | 10 |
| 24 Vdc | 11 |
| 31 Vdc | 12 |
| 20 Vfwr | 9 |
| 24 Vfwr | 10 |

Current values are shown in mA.

## dBA output

### Temporal Horns, Horn-strobes (G1-HD, G1-HDVM series)

| High dB Setting | UL464 | | Average | Peak |
|---|---|---|---|---|
| | Temporal | Steady | Temporal/ Steady | Temporal/ Steady |
| 16 Vdc | 81.4 | 85.5 | 91.4 | 94.2 |
| 24 Vdc | 84.4 | 88.6 | 94.5 | 97.6 |
| 33 Vdc | 86.3 | 90.4 | 96.9 | 99.5 |

| Low dB Setting | UL464 | | Average | Peak |
|---|---|---|---|---|
| | Temporal | Steady | Temporal/ Steady | Temporal/ Steady |
| 16 Vdc | 76.0 | 80.1 | 86.3 | 89.2 |
| 24 Vdc | 79.4 | 83.5 | 89.8 | 92.5 |
| 33 Vdc | 82.1 | 86.5 | 92.5 | 95.3 |

### Steady Tone Horns (G1-P series)

| | UL464 | Average | Peak |
|---|---|---|---|
| 16 Vdc | 77 dBA, min | 85 dBA | 91 dBA |
| 16 Vfwr | 77 dBA, min | 85 dBA | 91 dBA |

**Notes**

1. All values shown are dBA measured at 10 feet (3.01m).
2. UL464 values measured in reverberant room.
3. Average and Peak values are measured in anechoic chamber.

## Average Sound Output (dBA)

(High dB setting, anechoic, 24V, measured at 10ft)

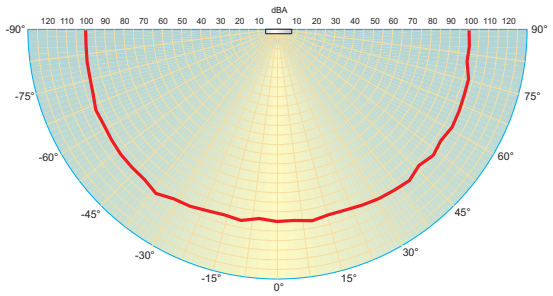


## Light output - (effective cd)

Percent of UL rating versus angle

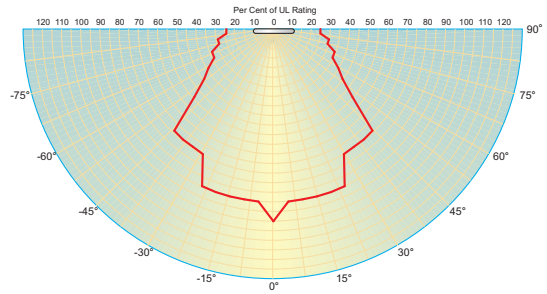


## Specifications

| | |
|---|---|
| Housing | Red or white textured UV stabilized, color impregnated engineered plastic. Exceeds 94V-0 UL flammability rating. |
| Lens | Optical grade polycarbonate (clear) |
| Mounting (indoor only) | Strobes and horn-strobes are for wall-mount installation only. Horn-only models may be ceiling- or wall-mounted.<br>Flush mount: 2½ inch (64 mm) deep one-gang box<br>Surface mount: Model 27193 surface mount box, wiremold box, or equivalent surface-mount box<br>With optional trim plate: One-gang, two-gang, four-inch square, octagonal, or European single-gang box |
| Wire connections | Screw terminals: single input for both horn and strobe. #18 to #12 AWG (0.75 $mm^2$ to 2.5 $mm^2$) wire size |
| Operating environment | Indoor only: 32-120°F (0-49°C) ambient temperature. 93% relative humidity |
| Agency listings/approvals | UL 1971, UL 1638, UL 464, ULC S525, ULC S526, CSFM, CE, FCC, MEA.<br>(All models comply with ADA Code of Federal Regulation Chapter 28 Part 36 Final Rule.) |
| Dimensions (HxWxD) | Signal: 4-1/2" x 2-3/4" x 13/16" (113 mm x 68 mm x 21 mm)<br>Trimplate: 5" (127 mm); Height – 5-7/8" (149 mm); Depth – ½" (13 mm) |
| Operating voltage | G1-HD series temporal-tone horns: non-coded, filtered 16-33 Vdc or unfiltered 16-33 Vdc FWR (or coded when horn set to steady tone)<br>G1-HDVM series temporal-tone horn-strobes: non-coded, filtered 16-33 Vdc or unfiltered 16-33 Vdc FWR (or coded (audible NAC only) when used with optional G1M Genesis Signal Master)<br>G1-VM series strobes: non-coded, filtered 16 - 33 Vdc or unfiltered 16-33 Vdc FWR<br>G1-P series steady-tone horns: coded or non-coded, filtered 20-31 Vdc or unfiltered 20-27 Vfwr |
| Strobe output rating | UL 1971, UL 1638, ULC S526: selectable 15 cd, 30 cd, 75 cd, or 110 cd output<br>UL 1971: 15 cd (fixed 15/75 cd models)<br>UL 1638, ULCS526: 75 cd (fixed 15/75 cd models) |
| Strobe flash rate | G1-VM strobes and G1-HDVM series temporal-tone horn-strobes: one flash per second synchronized with optional G1M Genesis Signal Master indefinitely within 10 milliseconds. Temporal setting (private mode only): synchronized to temporal output of horns on same circuit |
| Synchronization Sources | SIGA-CC1S, SIGA-MCC1S, SIGA-CC2A, SIGA-MCC2A, G1M-RM<br>BPS6A, BPS10A, APS6A, APS10A, iO64, iO500, Fireshield Plus 3, 5 and 10 zone.<br>Add G1M for G1-CVM &G1-HDVM devices only. |
| Horn pulse rate | G1-HD temporal-tone horns and G1-HDVM series temporal-tone horn-strobes: temporal rate synchronized with optional G1M Genesis Signal Master indefinitely within 10 milliseconds. G1-P steady-tone horns: continuous, steady tone only |
| Temporal audible pattern | ½ sec ON, ½ sec OFF, ½ sec ON, ½ sec OFF, ½ sec ON, 1½ sec OFF, then repeat cycle |

## Candela Output

| Lens Color | Rating | Switch Position A | Switch Position B | Switch Position C | Switch Position D |
|---|---|---|---|---|---|
| Amber | UL 1638 | 110 cd | 75 cd | 30 cd | 15 cd |
| Amber | UL 1971* | 88 cd | 60 cd | 24 cd | 12 cd |
| Clear | UL 1971 | 110 cd | 75 cd | 30 cd | 15 cd |

** Equivalent Rating*

28 31 01

Fire appliances available with white or red housings.




ECS/MNS appliances available with clear or amber lenses.




## Ordering Information

| Model | Housing | Marking | Lens | Strobe | Horn | Ship Wt. lbs (kg) |
|---|---|---|---|---|---|---|
| **Fire Alarm Appliances (c/w running man icon screen printed on housing)** | | | | | | |
| G1-VM | White | None | Clear | Selectable 15, 30, 75, or 110 cd | Strobe only | 0.25 (0.11) |
| G1F-HD | White | FIRE | Clear | Horn only | Selectable high/low dB | 0.25 (0.11) |
| G1F-HDV1575 | White | FIRE | Clear | 15/75 cd[1] | Temporal hi/lo dB-24V | 0.25 (0.11) |
| G1F-HDVM | White | FIRE | Clear | Selectable 15, 30, 75, or 110 cd | Selectable high/low dB | 0.25 (0.11) |
| G1F-P | White | FIRE | Clear | Steady Horn (not compatible with Genesis Signal Master) | | 0.25 (0.11) |
| G1F-V1575 | White | FIRE | Clear | 15/75 cd[1] | Strobe only | 0.25 (0.11) |
| G1F-VM | White | FIRE | Clear | Selectable 15, 30, 75, or 110 cd | Strobe only | 0.25 (0.11) |
| G1-HD | White | None | Clear | Horn only | Selectable high/low dB | 0.25 (0.11) |
| G1-HDVM | White | None | Clear | Selectable 15, 30, 75, or 110 cd | Selectable high/low dB | 0.25 (0.11) |
| G1-P | White | None | Clear | Steady Horn (not compatible with Genesis Signal Master) | | 0.25 (0.11) |
| G1RF-HD | Red | FIRE | Clear | Horn only | Selectable high/low dB | 0.25 (0.11) |
| G1RF-HDV1575 | Red | FIRE | Clear | 15/75 cd[1] | Temporal hi/lo dB-24V | 0.25 (0.11) |
| ★ G1RF-HDVM | Red | FIRE | Clear | Selectable 15, 30, 75, or 110 cd | Selectable high/low dB | 0.25 (0.11) |
| G1RF-P | Red | FIRE | Clear | Steady Horn (not compatible with Genesis Signal Master) | | 0.25 (0.11) |
| G1RF-V1575 | Red | FIRE | Clear | 15/75 cd[1] | Strobe only | 0.25 (0.11) |
| G1RF-VM | Red | FIRE | Clear | Selectable 15, 30, 75, or 110 cd | Strobe only | 0.25 (0.11) |
| G1R-HD | Red | None | Clear | Horn only | Selectable high/low dB | 0.25 (0.11) |
| G1R-HDVM | Red | None | Clear | Selectable 15, 30, 75, or 110 cd | Selectable high/low dB | 0.25 (0.11) |
| G1R-P | Red | None | Clear | Steady Horn (not compatible with Genesis Signal Master) | | 0.25 (0.11) |
| G1R-VM | Red | None | Clear | Selectable 15, 30, 75, or 110 cd | Strobe only | 0.25 (0.11) |
| **ECS/MNS Appliances (no running man icon on housing)** | | | | | | |
| G1WA-VMA | White | ALERT | Amber | Selectable A, B, C or D | Strobe only | 0.25 (0.11) |
| G1WA-VMC | White | ALERT | Clear | Selectable 15, 30, 75, or 110 cd | Strobe only | 0.25 (0.11) |
| G1WN-VMA | White | None | Amber | Selectable A, B, C or D | Strobe only | 0.25 (0.11) |
| G1WN-VMC | White | None | Clear | Selectable 15, 30, 75, or 110 cd | Strobe only | 0.25 (0.11) |
| **Trim Plates** | | | | | | |
| G1T | White | None | Genesis Trim Plate (for two-gang or 4" square boxes) | | | 0.15 (0.7) |
| G1RT | Red | None | Genesis Trim Plate (for two-gang or 4" square boxes) | | | 0.15 (0.7) |
| G1T-FIRE | White | FIRE | Genesis Trim Plate (for two-gang or 4" square boxes) | | | 0.15 (0.7) |
| G1RT-FIRE | Red | FIRE | Genesis Trim Plate (for two-gang or 4" square boxes) | | | 0.15 (0.7) |
| G1WT-ALERT | White | ALERT | Genesis Trim Plate (for two-gang or 4" square boxes) | | | 0.15 (0.7) |
| **Surface Boxes** | | | | | | |
| 27193-16 | White | N/A | One-gang surface mount box | | | 1 (0.4) |
| 27193-11 | Red | N/A | One-gang surface mount box | | | 1 (0.4) |

[1] These 15/75 cd models provide fixed output and are not multi-candela devices. The 15 cd output component complies with UL1971, while the 75 cd output component complies with UL 1638.

28 31 01

EDWARDS
A UTC Fire & Security Company

**Detection & alarm since 1872**

U.S.
T 888 378 2329
F 866 503 3996

Canada
Chubb Edwards
T 519 376 2430
F 519 376 7258

Southeast Asia
T : +65 6391 9300
F : +65 6391 9306

India
T : +91 80 4344 2000
F : +91 80 4344 2050

Australia
T +61 3 9239 1200
F +61 3 9239 1299

Europe
T +32 2 725 11 20
F +32 2 721 86 13

Latin America
T 305 593 4301
F 305 593 4300

utcfireandsecurity.com

© 2010 UTC Fire & Security.
All rights reserved.

Life Safety & Communications

28 31 01

# Sealed Lead-Acid Batteries



## Overview

Rechargeable sealed lead-acid batteries are ideal for use as a secondary (standby) power source as defined by ULC requirements for ULC listed fire alarm control panels. Their low maintenance and high energy density make them ideal for fire alarm signaling applications.

## Standard Features

- Rechargeable
- Non-spillable
- Non-hazardous
- Low maintenance
- High energy density

## Application

When multiple power supplies are provided, each power supply's battery requirements should be calculated individually. Consult the specific system manual to determine battery capacity requirements.

## Safety Information

Due to a battery's low internal resistance and high power density, high levels of short circuit current can develop across battery terminals. Put on protective eye covering and remove all jewelry before working on batteries. Do not rest tools or cables on the battery, and only use insulated tools. Follow all manufacturers installation instructions and diagrams when installing or maintaining batteries.

STANTEC PROJECT #: 110126045

SUBMITTAL # ELE-002 Fire Alarm Systems

This review by Stantec is for general conformance with the design concept of Stantec's design of the:

☐ Architectural ☑ Electrical
☐ Structural ☐ Other
☐ Mechanical

component(s) only and does not mean that Stantec has verified or approves the shop drawing(s). The Contractor remains solely responsible for the shop drawing(s) and this review by Stantec does not relieve the Contractor of the Contractor's responsibility for errors or omissions in the shop drawing(s) or for meeting all requirements of the contract documents. This review does not mean that Stantec approves the detailed design inherent in the shop drawing, responsibility for which shall remain with the Contractor submitting same, nor does this review mean that Stantec accepts any deviation of the shop drawing(s) from the contract documents. The Contractor is responsible for confirming all dimensions and correlating them at the job site, for all construction means, methods and techniques, and for coordination of construction work of all trades, including coordination of all shop drawings.

Stantec

☑ REVIEWED

☐ REVIEWED, AS NOTED

☐ REVISE AND RESUBMIT

☐ NOT REVIEWED

DATE June 20, 2018

BY Chester Martinez, E.I.T.

Contact us...
Email: edwards.fire@fs.utc.com
Web: *www.est-fire.com*

EST is an **EDWARDS** brand.

1016 Corporate Park Drive
Mebane, NC 27302

In Canada, contact Chubb Edwards...
Email: inquiries@chubbedwards.com
Web: *www.chubbedwards.com*

© 2015 UTC Fire & Security Americas Corporation, Inc. All rights reserved. Specifications subject to change without notice. Edwards is part of UTC Climate, Controls & Security, a unit of United Technologies Corporation.

28 31 01

## Specifications

| | |
|---|---|
| Case material | ABS thermoplastic |
| Regulatory information | DOT Class 60, batteries, non-hazardous, non-spillable |
| Operating environment | 32° F to 120° F (0° C to 49° C) 0 to 93% RH, non-condensing |

## Ordering Information

| Catalogue Number | Description | Dimensions (mm) | Shipping weight (kg) |
|---|---|---|---|
| 12V4A5 | 4.5 AH sealed lead acid battery - 12Vdc | 4.21" h x 2.76" w x 3.54" L (107 x 70 x 90) | 3.26lbs (1.48kg) |
| 12V7A2 | 7.2 AH sealed lead acid battery - 12Vdc | 4" h x 2.6" w x 6.0" L (102 x 66 x 152) | 4.85lbs (2.2kg) |
| ★ 12V10A5 | 10.5 AH sealed lead acid battery - 12Vdc | 4.8" h x 2.6" w x 6" L (122 x 66 x 152) | 7.05lbs (3.2kg) |
| 12V13A | 13 AH sealed lead acid battery - 12Vdc | 6.5" h x 3.15" w x 5.28" L (166 x 80 x 135) | 10.2lbs (4.62kg) |
| 12V18A | 18 AH sealed lead acid battery - 12Vdc | 6.6" h x 3.0" w x 7.1" L (168 x 76 x 180) | 11.73lbs (5.32kg) |
| 12V26A | 26 AH sealed lead acid battery - 12Vdc | 7.17" h x 4.92" w x 6.5" L (182 x 125 x 165) | 19.8lbs (9.0kg) |
| 12V35A | 35 AH sealed lead acid battery - 12Vdc | 6.26" h x 5.16" w x 7.76" L (159 x 131 x 197) | 24.3lbs (10.9kg) |
| 12V40A | 40 AH sealed lead acid battery - 12Vdc | 6.69" h x 6.5" w x 7.76" L (170 x 165 x 197) | 29.1lbs (13.2kg) |
| 12V50A | 50 AH sealed lead acid battery - 12Vdc | 7.87" h x 5.19" w x 10.11" L (200 x 132 x 257) | 35.3lbs (16kg) |
| 12V65A | 65 AH sealed lead acid battery - 12Vdc | 7.01" h x 6.57" w x 13.70" L (178 x 167 x 348) | 42.3lbs (19.2kg) |

**Date: Jun 18, 2018**

REVIEWED BY CONTRACTOR
Kudlik Construction Ltd.
NAME: Sandra Rousseau P.Eng
DATE: Jun 18, 2018

# Transmittal

**Arctic Electrical Nunavut Ltd**
PO Box 1381
Iqaluit, Nu.
X0A 0H0
Phone: 867-975-3494
**From: Lee Pitcher**



**Project** **Waste Wate Treatment Plant**
**Location** Iqaluit NU
**To** Kudlik Construction
Contact: Sandra Rousseau P.Eng.
srousseau@kudlik.biz

SE-03
PO-P18-120

Attached are the following items:

- [x] Drawings
- [ ] Prints
- [ ] Plans
- [x] Specifications
- [ ] Information
- [ ] Submittals

Other:

THESE ARE TRANSMITTED FOR:

- [ ] Prior Approval
- [x] Approval
- [ ] Approval as Submitted
- [ ] Approval as Noted
- [ ] Resubmittal for Approval
- [ ] Corrections
- [ ] Your Use
- [ ] Review and Comment
- [ ] Record

Bids due on:
Other:

| Qty | Type | MFG | Part |
|---|---|---|---|

Drawing E-601-Automatic Transfer Switch

**Notes:**
Please review the attached approval drawings carefully. Production cannot be scheduled until a signed copy of the final approved drawing are received. Be aware that once drawings are approved, any errors due to incorrect information are the responsibility of the client.

Do not hesitate to contact me if you have any questions or concerns.

THOMSON™
POWER SYSTEMS

# APPROVAL DRAWINGS

ATTACHED DOCUMENTS ARE DRAFT FOR REVIEW ONLY AND ARE SUBJECT TO CHANGE WITHOUT NOTICE.

DRAWINGS AND OR OTHER TECHNICAL INFORMATION SUPPLIED BY THOMSON POWER SYSTEMS AS A PART OF A SALE ARE FOR THE PURCHASER'S USE SOLELY IN CONJUNCTION WITH THAT EQUIPMENT, UNLESS SPECIFICALLY AGREED TO OTHERWISE AS A PART OF THE STANDARD TERMS & CONDITIONS.

THE INFORMATION CONTAINED IN THESE DRAWINGS IS THE PROPERTY OF THOMSON POWER SYSTEMS, IT IS NOT TO BE USED DETRIMENTALLY TO OUR INTERESTS.

NOTE:
ANY PROGRAM SETTINGS SHOWN REFLECT FACTORY DEFAULT SETTINGS ONLY. FINAL SETTINGS WILL BE REQUIRED TO BE SET BY THE COMMISSIONING AUTHORITY. FAILURE TO DO SO MAY RESULT IN EQUIPMENT FAILURE.

PROJECT NAME / REFERENCE : IQALUIT WTP

CUSTOMER : FRONTIER POWER PRODUCTS

THOMSON CUSTOMER ORDER : C-058937 REV# : 0

WORKORDER / SERIAL NUMBER : W-102489

MODEL NUMBER : TS873A0400A1CN5BKKAA

ATTACHED DRAWINGS :

| | | | |
|---|---|---|---|
| PHYSICAL LAYOUT & INSTALLATION DETAILS | W-102489-10A | REV# | 0 |
| MCS AC SCHEMATIC | W-102489-20A | REV# | 0 |
| ATS AC CONTROL SCHEMATIC | W-102489-20B | REV# | 0 |
| ATS DC CONTROL SCHEMATIC | W-102489-20C | REV# | 0 |
| STANDARD OPTION SCHEMATIC - CTKIT0400A | W-102489-30A | REV# | 0 |
| STANDARD OPTION SCHEMATIC - PPR-10 | W-102489-30B | REV# | 0 |

STANTEC PROJECT #: 110126045

SUBMITTAL # ELE-003 Automatic Transfer Switch

This review by Stantec is for general conformance with the design concept of Stantec's design of the:

☐ Architectural ☐ Structural ☐ Mechanical ☑ Electrical ☐ Other

component(s) only and does not mean that Stantec has verified or approves the shop drawing(s). The Contractor remains solely responsible for the shop drawing(s) and this review by Stantec does not relieve the Contractor of the Contractor's responsibility for errors or omissions in the shop drawing(s) or for meeting all requirements of the contract documents. This review does not mean that Stantec approves the detailed design inherent in the shop drawing, responsibility for which shall remain with the Contractor submitting same, nor does this review mean that Stantec accepts any deviation of the shop drawing(s) from the contract documents. The Contractor is responsible for confirming all dimensions and correlating them at the job site, for all construction means, methods and techniques, and for coordination of construction work of all trades, including coordination of all shop drawings.

Stantec

☐ REVIEWED

☑ REVIEWED, AS NOTED

☐ REVISE AND RESUBMIT

☐ NOT REVIEWED

DATE June 20, 2018

BY Chester Martinez, E.I.T.

Provide 4-position switch as per specifcations- Test, Auto, Manual, Engine Start.

FEATURES / RATINGS:

| | |
|---|---|
| AMPERAGE : | 400A |
| VOLTAGE : | 347 / 600V (3PH, 4W, GROUNDED NEUTRAL) |
| POLES : | 3-POLE |
| FREQUENCY : | 60HZ |
| CONFIGURATION : | STANDARD ATS |
| APPLICATION : | STANDARD |
| OPERATION : | OPEN TRANSITION |
| ENCLOSURE : | NEMA 2, ASA # 61 GREY |
| ATS CONTROLLER : | TSC900 C/W GHC DISPLAY |

| | |
|---|---|
| UTILITY (OR SOURCE 1) SWITCHING DEVICE : | MOLDED CASE SWITCH |
| GENERATOR (OR SOURCE 2) SWITCHING DEVICE : | MOLDED CASE SWITCH |
| APPROVAL STANDARD : | UL1008 / CSA C22.2.NO 178 |

SYSTEM OPTIONS:

| | |
|---|---|
| LPM : | TRANSFER SWITCH LOAD POWER METERING (0400A CT KIT) |
| PPR-10 : | PROGRAMMABLE POWER RELAY INCLUDES 10A FORM "C" CONTACT WIRED TO TERMINAL (EXTERNAL 24VDC REQ) |
| CUSTOM OPTION 1 : | NEMA 2 ENCLOSURE C/W DRIP SHIELD |

SHOP DRAWING / SUBMITTAL REVIEW

☐ APPROVED ☐ APPROVED WITH CHANGES NOTED

☐ REVISE AND RESUBMIT ☐ REJECTED _____

SUBMITTAL WAS RECEIVED FOR DESIGN CONFORMITY AND GENERAL CONFORMANCE TO CONTRACT DOCUMENTS ONLY. THE CONTRACTOR FOR CONFIRMING AND CORRELATING DIMENSIONS AT JOB SITES FOR TOLERANCES, CLEARANCES, QUANTITIES, FABRICATION PROCESSES AND TECHNIQUES OF CONSTRUCTION, COORDINATION OF HIS WORK WITH OTHER TRADES AND FULL COMPLIANCE WITH CONTRACT

BY_____ DATE_____

COMPANY NAME_____

CITY_____STATE / PROV _____

9087A - 198TH STREET, LANGLEY, BC CANADA V1M 3B1
EMAIL : info@thomsonps.com, www.thomsonps.com

REGAL®

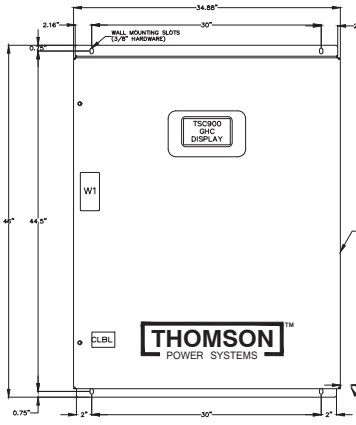


FRONT VIEW

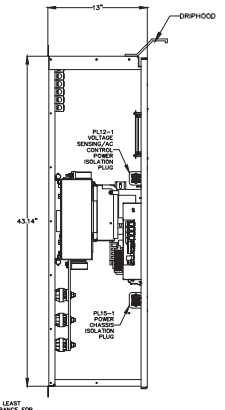


LHS VIEW
(SIDE COVER REMOVED)

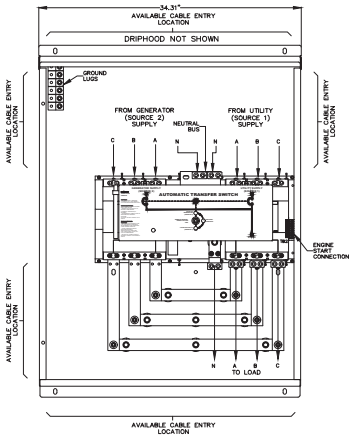


INTERIOR FRONT VIEW
(DOOR NOT SHOWN)

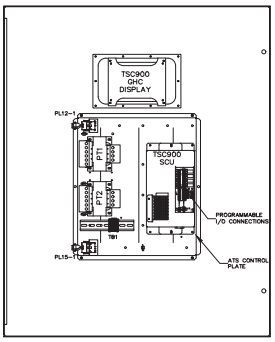


VIEWED FROM REAR
(INSIDE) OF DOOR

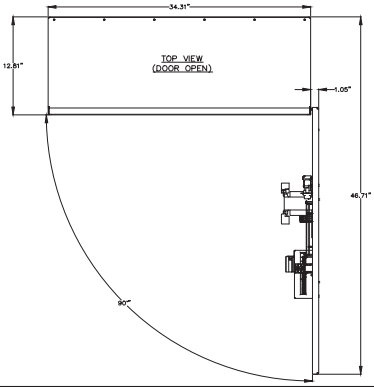


| BASIC MODEL TS87xA | STANDARD ATS | | | | |
|---|---|---|---|---|---|
| | CLOSING AND WITHSTAND RATING AVAILABLE AMPS (RMS) CLOSING & WITHSTAND RATINGS SHOWN ARE ONLY FOR ATS UTILITY AND/OR GENERATOR POWER SOURCE WHEN PROTECTED BY CIRCUIT BREAKER SUPPLIED WITH ADEQUATE OVERCURRENT PROTECTION. PLEASE REFER TO PRODUCT INSTRUCTION MANUAL FOR FURTHER INFORMATION ON UPSTREAM PROTECTION REQUIREMENT. | | | | |
| | MAX. VOLTAGE | RATED CURRENT (A) | @240V | @480V | @600V |
| TS 873A--400 | 600 | 400 | 65,000 | 50,000 | 35,000 |

| CONNECTION DATA | | |
|---|---|---|
| 400A ATS | UTILITY (SRC1) | 1-2C, 2/0-500MCM Cu/Al PER PHASE |
| | GENERATOR (SRC2) | 1-2C, 2/0-500MCM Cu/Al PER PHASE |
| | LOAD | 1-2C, 2/0-500MCM Cu/Al PER PHASE |
| | NEUTRAL | 1-2C, 2/0-500MCM Cu/Al PER SOURCE |
| | GROUND | 6C, #6-250MCM Cu/Al |

| GENERAL NOTES | |
|---|---|
| 1 | POWER SWITCHING DEVICES ARE MECHANICALLY INTERLOCKED SO THAT ONLY ONE DEVICE IS CLOSED AT A TIME |
| 2 | REFER COVER PAGE / SELECTED OPTION LIST FOR PROJECT SPECIFIC DETAILS |

2.5" x 5"

W1

**DANGER**
**PELIGRO**

**Arc Flash and Shock Hazard**
Will cause severe injury or death. Most likely arc-fault energy is at the load side of the ATS. Do not open door unless all sources of supply have been disconnected. Only qualified electrical personnel utilizing safe work practices and appropriate Personal Protective Equipment (PPE) should perform work on this equipment. Failure to follow NFPA 70E for instructions on PPE, may cause injury or death.

**Risque d'Arc Electrique et d'Electrocution**
Peut causer des blessures graves ou la mort. Peut être causé par un arc-flash d'énergie. Débranchez toutes les sources d'alimentation avant d'ouvrir la porte. Seul le personnel qualifié doit être habilité et entretenu uniquement par un électricien qualifié. Ce dernier doit connaître les pratiques de travail sécuritaires et porter l'équipement de protection individuelle approprié. Le non respect peut entraîner des blessures graves ou la mort. Consultez la norme NFPA 70E pour le manuel des exigences électriques PPE.

**Riesgo de Arco y Choque Eléctrico**
Va causando serious graves o muerte. Sitio de un circuito energizado - ver diagrama. Desconectar todas las fuentes de alimentación antes de abrir la puerta. Sólo el personal calificado debe estar instalado y mantener por personal calificado, usando medidas de seguridad y equipo de protección personal (PPE) adecuado. El incumplimiento puede resultar en lesiones graves o muerte.Consulte la NFPA 70E para los requisitos mínimos del equipo de protección personal (PPE).

QTY = 1

| | | | | | | |
|---|---|---|---|---|---|---|
| | | | | | | |

☐ APPROVED FOR CONSTRUCTION
☐ MASTER COPY ☐ REFERENCE COPY ____ OF ____
☐ MULTIPLE UNIT WORK ORDER
☐ RELEASED FOR INFORMATION
AUTH. BY: _____ DATE: _____

CROSS REFERENCE LEGEND
5.0C - C-1
GRID COORDINATE
SHEET No.

| DRAWING No. | REFERENCE DRAWINGS | No. | REVISIONS | BY | AUTH | DATE |
|---|---|---|---|---|---|---|

THOMSON POWER SYSTEMS

AUTOMATIC TRANSFER SWITCH
MODEL TS 873A0400A1CN5BKKAA
PHYSICAL LAYOUT & INSTALLATION DETAILS
IQALUIT WTP

FOR REVIEW ONLY

DRAWINGS AND OR OTHER TECHNICAL INFORMATION SUPPLIED BY THOMSON POWER SYSTEMS AS A PART OF A SALE OF EQUIPMENT ARE FOR THE PURCHASER'S USE SOLELY IN CONJUNCTION WITH THAT EQUIPMENT, UNLESS SPECIFICALLY AGREED TO OTHERWISE AS A PART OF THE TERMS OF SALE.

| CUSTOMER | FRONTIER POWER PRODUCTS | | |
|---|---|---|---|
| CUSTOMER ORDER No. | C-058937 | WORK ORDER No. | W-102489 |
| DRAWN BY | NS | AUTH BY | OG |
| DATE | 18-06-12 | REV | 0 |
| DRAWING/FILE No. | W-102489-10A | SHEET | 10A |

© THE INFORMATION ON THIS DRAWING IS THE PROPERTY OF THOMSON POWER SYSTEMS. IT IS NOT TO BE USED DETRIMENTALLY TO OUR INTERESTS

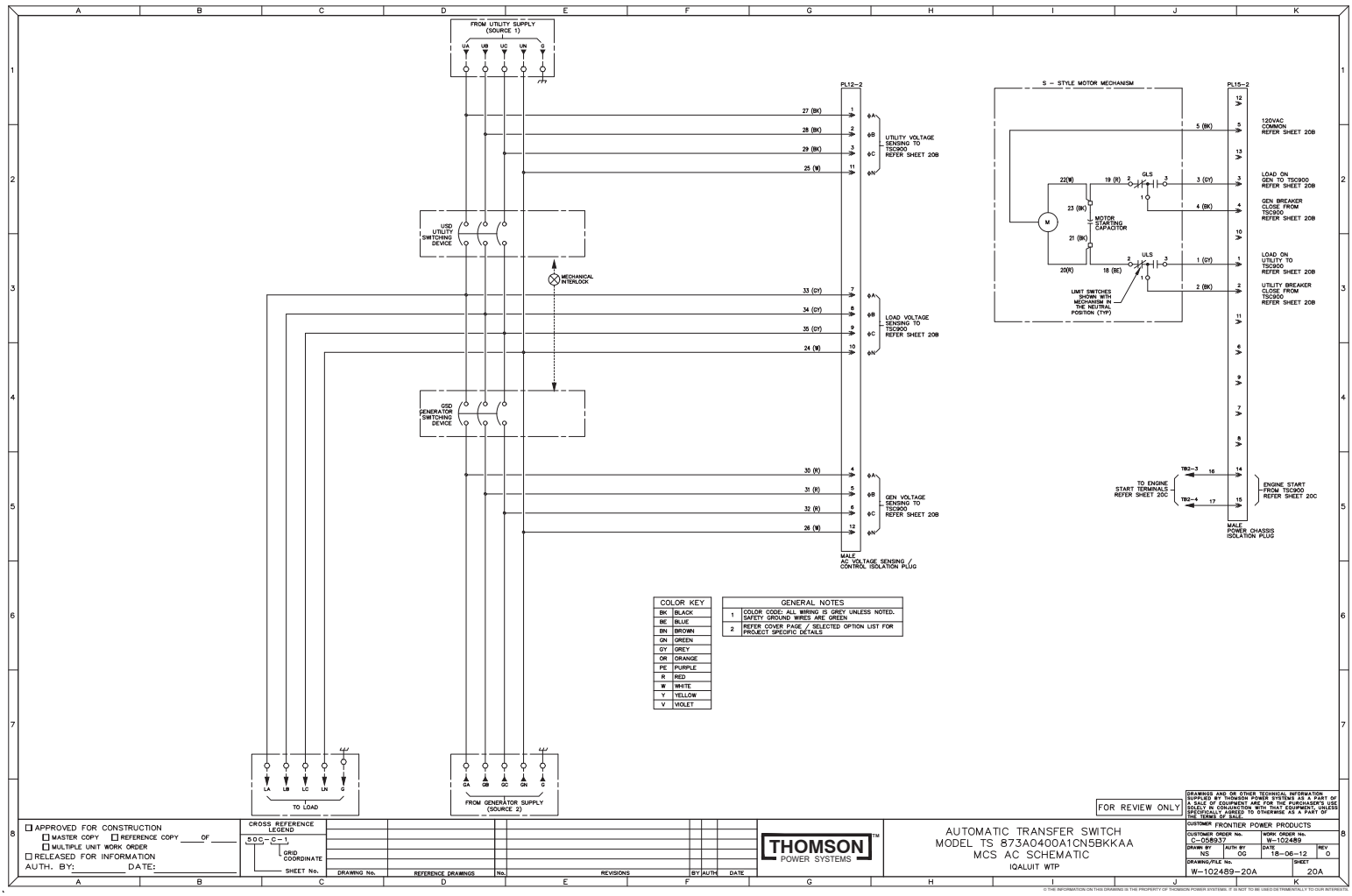


| COLOR KEY | |
|---|---|
| BK | BLACK |
| BE | BLUE |
| BN | BROWN |
| GN | GREEN |
| GY | GREY |
| OR | ORANGE |
| PE | PURPLE |
| R | RED |
| W | WHITE |
| Y | YELLOW |
| V | VIOLET |

**GENERAL NOTES**

1. COLOR CODE: ALL WIRING IS GREY UNLESS NOTED. SAFETY GROUND WIRES ARE GREEN
2. REFER COVER PAGE / SELECTED OPTION LIST FOR PROJECT SPECIFIC DETAILS

FOR REVIEW ONLY

DRAWINGS AND OR OTHER TECHNICAL INFORMATION SUPPLIED BY THOMSON POWER SYSTEMS AS A PART OF A SALE OF EQUIPMENT ARE FOR THE PURCHASER'S USE SOLELY IN CONJUNCTION WITH THAT EQUIPMENT, UNLESS SPECIFICALLY AGREED TO OTHERWISE AS A PART OF THE TERMS OF SALE.

☐ APPROVED FOR CONSTRUCTION
☐ MASTER COPY ☐ REFERENCE COPY ____ OF ____
☐ MULTIPLE UNIT WORK ORDER
☐ RELEASED FOR INFORMATION
AUTH. BY: _____ DATE: _____

CROSS REFERENCE LEGEND
5.0C-C-1
GRID COORDINATE
SHEET No.

| DRAWING No. | REFERENCE DRAWINGS | No. | REVISIONS | BY | AUTH | DATE |
|---|---|---|---|---|---|---|

THOMSON POWER SYSTEMS

# AUTOMATIC TRANSFER SWITCH
## MODEL TS 873A0400A1CN5BKKAA
## MCS AC SCHEMATIC
IQALUIT WTP

| | |
|---|---|
| CUSTOMER | FRONTIER POWER PRODUCTS |
| CUSTOMER ORDER No. | C-058937 |
| WORK ORDER No. | W-102489 |
| DRAWN BY | NS |
| AUTH. BY | OG |
| DATE | 18-06-12 |
| REV | 0 |
| DRAWING/FILE No. | W-102489-20A |
| SHEET | 20A |

© THE INFORMATION ON THIS DRAWING IS THE PROPERTY OF THOMSON POWER SYSTEMS. IT IS NOT TO BE USED DETRIMENTALLY TO OUR INTERESTS

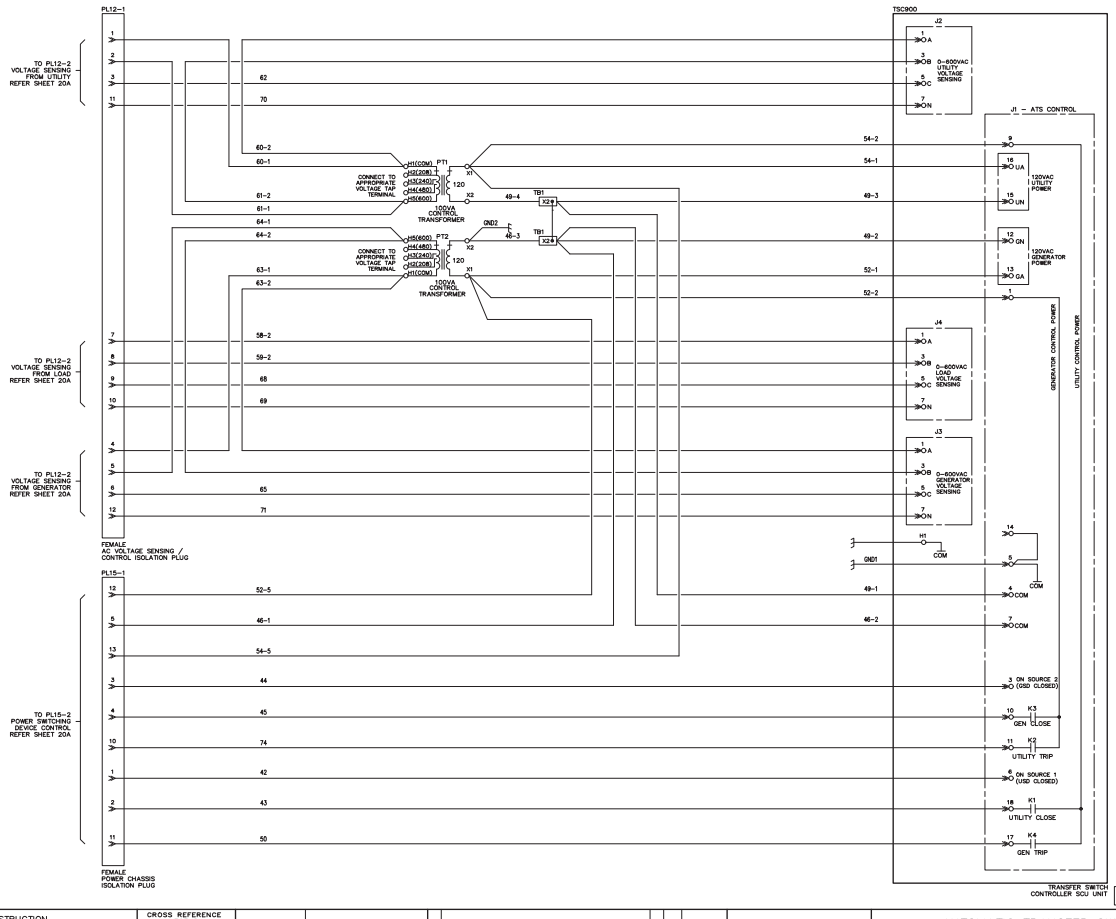


| GENERAL NOTES | |
|---|---|
| 1 | COLOR CODE: ALL WIRING IS GREY UNLESS NOTED. SAFETY GROUND WIRES ARE GREEN |
| 2 | REFER COVER PAGE / SELECTED OPTION LIST FOR PROJECT SPECIFIC DETAILS |

| VOLTAGE (X DENOTES HIGH POLARITY MARKER) | | | | | | | |
|---|---|---|---|---|---|---|---|
| PT TAP | 208 | 240 | 380 | 400 | 416 | 480 | 600 |
| H1 | X | X | | | X | X | X |
| H2 | X | | X | X | | | |
| H3 | | X | | | | | |
| H4 | | | | | X | X | X |
| H5 | X | X | X | X | | | |

| COLOR KEY | |
|---|---|
| BK | BLACK |
| BE | BLUE |
| BN | BROWN |
| GN | GREEN |
| GY | GREY |
| OR | ORANGE |
| PE | PURPLE |
| R | RED |
| W | WHITE |
| Y | YELLOW |
| V | VIOLET |

FOR REVIEW ONLY

DRAWINGS AND OR OTHER TECHNICAL INFORMATION SUPPLIED BY THOMSON POWER SYSTEMS AS A PART OF A SALE OF EQUIPMENT ARE FOR THE PURCHASER'S USE SOLELY IN CONJUNCTION WITH THAT EQUIPMENT, UNLESS SPECIFICALLY AGREED TO OTHERWISE AS A PART OF THE TERMS OF SALE.

☐ APPROVED FOR CONSTRUCTION
☐ MASTER COPY ☐ REFERENCE COPY ____ OF ____
☐ MULTIPLE UNIT WORK ORDER
☐ RELEASED FOR INFORMATION
AUTH. BY: _____ DATE: _____

CROSS REFERENCE LEGEND
5.0C-C-1
GRID COORDINATE
SHEET No.

| DRAWING No. | REFERENCE DRAWINGS | No. | REVISIONS | BY | AUTH | DATE |
|---|---|---|---|---|---|---|

THOMSON POWER SYSTEMS

# AUTOMATIC TRANSFER SWITCH
# MODEL TS 873A0400A1CN5BKKAA
# ATS AC CONTROL SCHEMATIC

IQALUIT WTP

CUSTOMER FRONTIER POWER PRODUCTS

| CUSTOMER ORDER No. | WORK ORDER No. |
|---|---|
| C-058937 | W-102489 |

| DRAWN BY | AUTH BY | DATE | REV |
|---|---|---|---|
| NS | OG | 18-06-12 | 0 |

DRAWING/FILE No. W-102489-20B | SHEET 20B

© THE INFORMATION ON THIS DRAWING IS THE PROPERTY OF THOMSON POWER SYSTEMS. IT IS NOT TO BE USED DETRIMENTALLY TO OUR INTERESTS

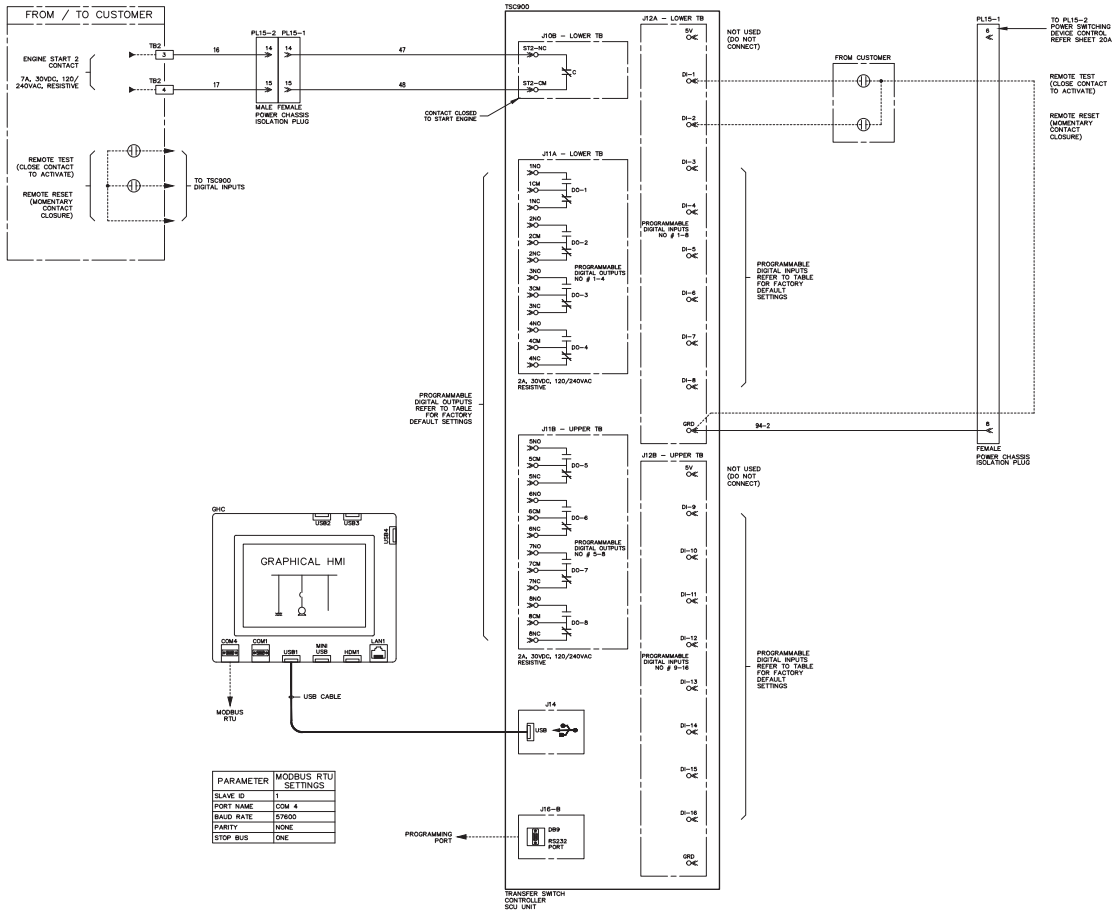


| PARAMETER | MODBUS RTU SETTINGS |
|---|---|
| SLAVE ID | 1 |
| PORT NAME | COM 4 |
| BAUD RATE | 57600 |
| PARITY | NONE |
| STOP BUS | ONE |

## TSC900 FACTORY DEFAULT SETTINGS

NOTE : REFER TO OPTION DRAWINGS FOR APPLICABLE CHANGES TO FACTORY DEFAULT SETTINGS

| PARAMETER | DEFAULT | RANGE |
|---|---|---|
| GENERATOR (SOURCE 2) START DELAY | 3 SEC | 0–60 SEC |
| GENERATOR (SOURCE 2) WARM UP DELAY | 2 SEC | 0–3600 SEC |
| GENERATOR (SOURCE 2) COOL DOWN DELAY | 300 SEC | 0–3600 SEC |
| UTILITY (SOURCE 1) RETURN DELAY | 300 SEC | 0–3600 SEC |
| TRANSFER NEUTRAL DELAY | 3 SEC | 0–120 SEC |
| TRANSFER FAIL DELAY | 30 SEC | 0–120 SEC |
| EXERCISE TIMER | PROG. | PROG. |
| GENERATOR (SOURCE 2) UNDER VOLTAGE DELAY | 3 SEC | 0–10 SEC |
| GENERATOR (SOURCE 2) UNDER FREQUENCY DELAY | 5 SEC | 0–10 SEC |
| GENERATOR (SOURCE 2) UNDER VOLTAGE PICK UP | 90% | 75–100% |
| GENERATOR (SOURCE 2) UNDER VOLTAGE DROP OUT | 85% | 70–95% |
| UTILITY (SOURCE 1) UNDER VOLTAGE DELAY | 1 SEC | 0–10 SEC |
| UTILITY (SOURCE 1) UNDER VOLTAGE PICK UP | 90% | 75–100% |
| UTILITY (SOURCE 1) UNDER VOLTAGE DROP OUT | 85% | 70–95% |

ALL SETTINGS ARE FIELD ADJUSTABLE UNLESS NOTED. REFER TO THE TSC900 MANUAL FOR A COMPLETE LISTING OF ALL TSC900 SETTINGS.

### GENERAL NOTES

| | |
|---|---|
| 1 | COLOR CODE: ALL WIRING IS GREY UNLESS NOTED. SAFETY GROUND WIRES ARE GREEN |
| 2 | REFER COVER PAGE / SELECTED OPTION LIST FOR PROJECT SPECIFIC DETAILS |

### COLOR KEY

| | |
|---|---|
| BK | BLACK |
| BE | BLUE |
| BN | BROWN |
| GN | GREEN |
| GY | GREY |
| OR | ORANGE |
| PE | PURPLE |
| R | RED |
| W | WHITE |
| Y | YELLOW |
| V | VIOLET |

FOR REVIEW ONLY

☐ APPROVED FOR CONSTRUCTION
☐ MASTER COPY ☐ REFERENCE COPY ____ OF ____
☐ MULTIPLE UNIT WORK ORDER
☐ RELEASED FOR INFORMATION
AUTH. BY: _____ DATE: _____

CROSS REFERENCE LEGEND
5.0C – C – 1
GRID COORDINATE
SHEET No.

| DRAWING No. | REFERENCE DRAWINGS | No. | REVISIONS | BY | AUTH | DATE |
|---|---|---|---|---|---|---|

THOMSON POWER SYSTEMS

# AUTOMATIC TRANSFER SWITCH
# MODEL TS 873A0400A1CN5BKKAA
# ATS DC CONTROL SCHEMATIC

IQALUIT WTP

DRAWINGS AND OR OTHER TECHNICAL INFORMATION SUPPLIED BY THOMSON POWER SYSTEMS AS A PART OF A SALE OF EQUIPMENT ARE FOR THE PURCHASER'S USE SOLELY IN CONJUNCTION WITH THAT EQUIPMENT, UNLESS SPECIFICALLY AGREED TO OTHERWISE AS A PART OF THE TERMS OF SALE.

| | | | |
|---|---|---|---|
| CUSTOMER | FRONTIER POWER PRODUCTS | | |
| CUSTOMER ORDER No. | C-058937 | WORK ORDER No. | W-102489 |
| DRAWN BY | NS | AUTH BY | OG |
| DATE | 18-06-12 | REV. | 0 |
| DRAWING/FILE No. | W-102489-20C | SHEET | 20C |

© THE INFORMATION ON THIS DRAWING IS THE PROPERTY OF THOMSON POWER SYSTEMS. IT IS NOT TO BE USED DETRIMENTALLY TO OUR INTERESTS

## ☒ CTK0400A OPTION

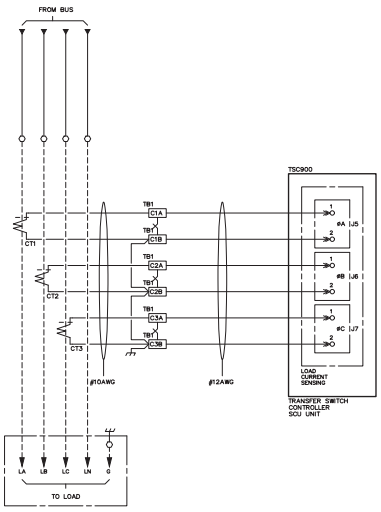


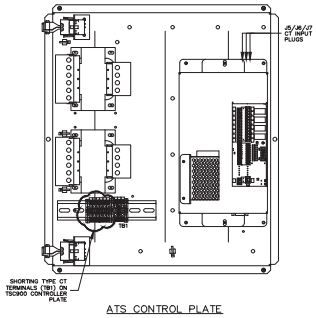


ATS CONTROL PLATE

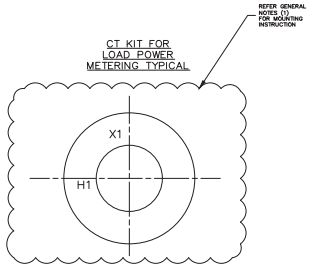


| PART ID | OPTION KITS |
|---|---|
| CTK0100 | 100 AMPS |
| CTK0150 | 150 AMPS |
| CTK0250 | 200–250 AMPS |
| CTK0400 | 400 AMPS |
| CTK0600 | 600 AMPS |
| CTK0800 | 800 AMPS |
| CTK1200 | 1000–1200 AMPS |
| CTK1600 | 1600 AMPS |
| CTK2000 | 2000 AMPS |

| GENERAL NOTES | |
|---|---|
| 1 | CT'S TO BE MOUNTED ON THE LOAD SIDE OF THE ATS. CUSTOMER TO VERIFY POLARITY BEFORE CONNECTING THE CT SECONDARIES TO THE TRANSFER SWITCH CONTROLLER. |
| 2 | ATS CONTROL PLATE MOUNTED ON THE BACK SIDE OF DOOR FOR MCS / MOS AND FOR ICS MOUNTED ON THE BACKPAN. |
| 3 | REFER COVER PAGE / SELECTED OPTION LIST FOR PROJECT SPECIFIC DETAILS |

BILL OF MATERIALS FOR CABLE HARNESS

| PART DESCRIPTION | PART ID | QTY |
|---|---|---|
| WIRE, 18AWG, GREY, TINNED, TEW, 600V, | 002027 | 600 INCHES |
| TERM. BLK, RAIL MNT, 40A, 600V, WK4/U, | 001861 | 6 |
| TERM. BLK, ENDPLATE, WK 2.5–4/U, | 001872 | 1 |
| SCREW, SHT–MTL, RDH, ROB #6 X 5/8" | 002070 | 2 |
| MTG–RAIL, TYPE–35, SLOTTED(7.5X2–METERS) | 002795 | 6 |
| TERM. BLK, PARTITION PLATE, WK2.5–4/U, | 004189 | 2 |
| CONN, MINI–FIT, J, 94V–2, 2X1–WAY,FEMALE (J5/J6/J7) | 012654 | 3 |
| CONN, FEMALE CRIMP, MINI–FIT, JR, SERIES | 010954 | 6 |
| WIRE SLEEVE, 0.5", EXPANDO PT PLUS, | 000456 | 175 INCHES |
| TERM BLK CROSS CONN.W SCRW WK4/U SR7 | 009677 | 3 |
| TERM. BLK, EARTH TERMINAL, 10–24 AWG | 005211 | 2 |

FOR REVIEW ONLY

DRAWINGS AND OR OTHER TECHNICAL INFORMATION SUPPLIED BY THOMSON POWER SYSTEMS AS A PART OF A SALE OF EQUIPMENT ARE FOR THE PURCHASER'S USE SOLELY IN CONJUNCTION WITH THAT EQUIPMENT, UNLESS SPECIFICALLY AGREED TO OTHERWISE AS A PART OF THE TERMS OF SALE.

☐ APPROVED FOR CONSTRUCTION
☐ MASTER COPY ☐ REFERENCE COPY ____ OF ____
☐ MULTIPLE UNIT WORK ORDER
☐ RELEASED FOR INFORMATION
AUTH. BY: _____ DATE: _____

CROSS REFERENCE LEGEND
5.0C – C – 1
GRID COORDINATE
SHEET No.

DRAWING No. | REFERENCE DRAWINGS | No. | REVISIONS | BY | AUTH | DATE

THOMSON™ POWER SYSTEMS

AUTOMATIC TRANSFER SWITCH
MODEL TS 873A0400A1CN5BKKAA
STANDARD OPTION SCHEMATIC – CTKIT0400A
IQALUIT WTP

CUSTOMER: FRONTIER POWER PRODUCTS
CUSTOMER ORDER No.: C–058937
WORK ORDER No.: W–102489
DRAWN BY: NS | AUTH BY: OG | DATE: 18–06–12 | REV: 0
DRAWING/FILE No.: W–102489–30A
SHEET: 30A

© THE INFORMATION ON THIS DRAWING IS THE PROPERTY OF THOMSON POWER SYSTEMS. IT IS NOT TO BE USED DETRIMENTALLY TO OUR INTERESTS

## ☒ PPR–10 OPTION

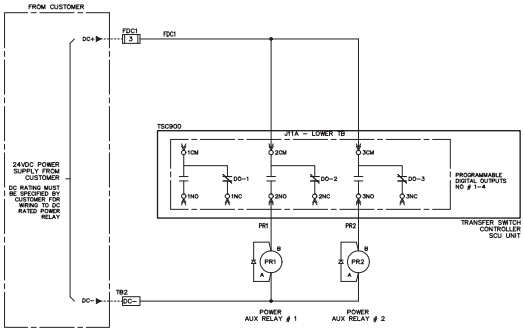


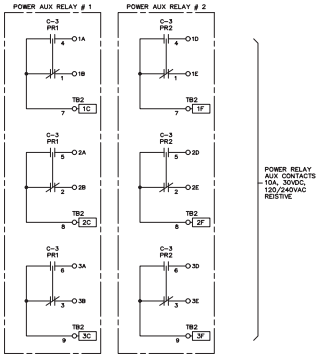


| PR1 | | | | |
|---|---|---|---|---|
| T1 | TYPE | T2 | REF | |
| 4 | 4h | 7 | A–5 | |
| 1 | 4W | | | |
| 5 | 4h | 8 | A–6 | |
| 2 | 4W | | | |
| 6 | 4h | 9 | A–7 | |
| 3 | 4W | | | |

| PR2 | | | |
|---|---|---|---|
| T1 | TYPE | T2 | REF |
| 4 | 4h | 7 | B–5 |
| 1 | 4W | | |
| 5 | 4h | 8 | B–6 |
| 2 | 4W | | |
| 6 | 4h | 9 | B–7 |
| 3 | 4W | | |

| PPR–10 OPTION NOTES | |
|---|---|
| 1 | FOR POWER RELAY FUNCTIONAL DESCRIPTION REFER TO FACTORY DEFAULT DIGITAL OUTPUT FUNCTION TABLE ON ATS DC CONTROL SCHEMATIC |
| 2 | THE NUMBER OF RELAYS SUPPLIED WILL BE PER ORDERED QUANTITY |
| 3 | CUSTOMER TO WIRE DIRECTLY TO RELAY TERMINALS |
| 4 | SPECIFIED QUANTITY OF PROGRAMMABLE POWER RELAYS ARE WIRED FOR CUSTOMER AS PER OPTION LIST |
| 5 | DC SUPPLY FOR THE RELAYS, BY DEFAULT IS 24VDC. PLEASE SPECIFY THE VOLTAGE RATING OTHER THAN 24VDC ON OPTION LIST |

| BILL OF MATERIALS | | |
|---|---|---|
| PART DESCRIPTION | PART ID | QTY |
| RELAY, 24VDC COIL, 11 PIN SQ., /W LED | 004095 | 2 |
| RELAY SOCKET, 11 PIN, SQ., RAIL MOUNT | 000399 | 2 |
| FUSE HOLDER, 1P, 30A, 600V, 200KA, CC | 002374 | 1 |
| FUSE, 3A, 600VAC, CLASS CC | 003633 | 1 |
| TERM. BLK, RAIL MNT, 40A, 600V, MK4/U, | 001861 | 10 |

| GENERAL NOTES | |
|---|---|
| 1 | FOR MCS/MDS/PCS TYPE ATS, MOUNT THE RELAYS ON SIDE COVER WHERE SPACE PERMITS |
| 2 | REFER COVER PAGE / SELECTED OPTION LIST FOR PROJECT SPECIFIC DETAILS |

PPR RELAY
[TYPICAL]

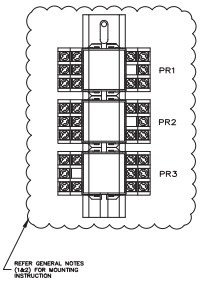


FOR REVIEW ONLY

DRAWINGS AND OR OTHER TECHNICAL INFORMATION SUPPLIED BY THOMSON POWER SYSTEMS AS A PART OF A SALE OF EQUIPMENT ARE FOR THE PURCHASER'S USE SOLELY IN CONJUNCTION WITH THAT EQUIPMENT, UNLESS SPECIFICALLY AGREED TO OTHERWISE AS A PART OF THE TERMS OF SALE.

☐ APPROVED FOR CONSTRUCTION
☐ MASTER COPY ☐ REFERENCE COPY ____ OF ____
☐ MULTIPLE UNIT WORK ORDER
☐ RELEASED FOR INFORMATION
AUTH. BY: _____ DATE: _____

CROSS REFERENCE LEGEND
5.0C–C–1
GRID COORDINATE
SHEET No.

| DRAWING No. | REFERENCE DRAWINGS | No. | REVISIONS | BY | AUTH | DATE |
|---|---|---|---|---|---|---|

THOMSON™ POWER SYSTEMS

AUTOMATIC TRANSFER SWITCH
MODEL TS 873A0400A1CN5BKKAA
STANDARD OPTION SCHEMATIC – PPR–10
IQALUIT WTP

CUSTOMER FRONTIER POWER PRODUCTS
CUSTOMER ORDER No. C–058937
WORK ORDER No. W–102489
DRAWN BY NS | AUTH BY OG | DATE 18–06–12 | REV 0
DRAWING/FILE No. W–102489–30B
SHEET 30B

© THE INFORMATION ON THIS DRAWING IS THE PROPERTY OF THOMSON POWER SYSTEMS. IT IS NOT TO BE USED DETRIMENTALLY TO OUR INTERESTS

**Date: Jun 25, 2018**

REVIEWED BY CONTRACTOR
Kudlik Construction Ltd.
NAME: Sandra Rousseau P.Eng
DATE: Jun 26, 2018

# Transmittal

**Arctic Electrical Nunavut Ltd**
PO Box 1381
Iqaluit, Nu.
X0A 0H0
Phone: 867-975-3494
**From: Lee Pitcher**

**Project** **Waste Wate Treatment Plant**
**Location** Iqaluit NU
**To** Kudlik Construction
Contact: Sandra Rousseau P.Eng.
srousseau@kudlik.biz



SE-04
PO-P18-124

Attached are the following items:

- [x] Drawings
- [ ] Prints
- [ ] Plans
- [x] Specifications
- [ ] Information
- [ ] Submittals

Other:

THESE ARE TRANSMITTED FOR:

- [ ] Prior Approval
- [x] Approval
- [ ] Approval as Submitted
- [ ] Approval as Noted
- [ ] Resubmittal for Approval
- [ ] Corrections
- [ ] Your Use
- [ ] Review and Comment
- [ ] Record

Bids due on:
Other:

| Qty | Type | MFG | Part |
|---|---|---|---|

Section 26 50 00 Lighting

**Notes:**
Please review the attached approval drawings carefully. Production cannot be scheduled until a signed copy of the final approved drawing are received. Be aware that once drawings are approved, any errors due to incorrect information are the responsibility of the client.

Do not hesitate to contact me if you have any questions or concerns.

**Date: Jun 25, 2018**

**BDA Lighting Group**
**77 Auriga Drive, Unit 6**
**Ottawa On K2E7Z7**
**Phone:** (613) 727-6223
**Toll Free:** (855) 606-6223
**Website:** WWW.BDALG.CA

Project Name:
**Iqaluit Water Treatment Plant**
BDA18-23511

Bid Date:
May 31, 2018

Submittal Date:
Jun 21, 2018

BDA LIGHTING GROUP

Jun 25, 2018

Guillevin Ottawa
175 Richmond Road
Ottawa ON K1Z 6W3

**RE:** Iqaluit Water Treatment Plant

| Qty | Type | MFG | Part |
|---|---|---|---|
| 8 | 401 | HUBBELL LIGHTING | QSP2-24L-50-5K7-4-UNV-BL |
| 7 | 404 | Peerless Electric | NSL-RA-4-60-50K-W-WG-347 |
| 18 | 405 | Peerless Electric | NSL-RA-4-60-50K-W-WG-347 |
| | 402 | | FMV11LCY/UNV34 76 |
| | 403 | | VMV5L2A/UNV34 |
| | 406 | | EGW/4/S/LED/HO/CW/UE |

Contractor to review quantity prior to ordering

STANTEC PROJECT #: 110126045

SUBMITTAL # ELE-004 Lighting

This review by Stantec is for general conformance with the design concept of Stantec's design of the:

- ☐ Architectural
- ☐ Structural
- ☐ Mechanical
- ☑ Electrical
- ☐ Other

component(s) only and does not mean that Stantec has verified or approves the shop drawing(s). The Contractor remains solely responsible for the shop drawing(s) and this review by Stantec does not relieve the Contractor of the Contractor's responsibility for errors or omissions in the shop drawing(s) or for meeting all requirements of the contract documents. This review does not mean that Stantec approves the detailed design inherent in the shop drawing, responsibility for which shall remain with the Contractor submitting same, nor does this review mean that Stantec accepts any deviation of the shop drawing(s) from the contract documents. The Contractor is responsible for confirming all dimensions and correlating them at the job site, for all construction means, methods and techniques, and for coordination of construction work of all trades, including coordination of all shop drawings.

Stantec

- ☐ REVIEWED
- ☑ REVIEWED, AS NOTED
- ☐ REVISE AND RESUBMIT
- ☐ NOT REVIEWED

DATE June 26, 2018

BY Chester Martinez, E.I.T.

| BDA LIGHTING GROUP | **Project Name:** Iqaluit Water Treatment Plant | **Product Number:** QSP2-24L-50-5K7-4-UNV-BL<br>Notes: | **Type:** 401<br>BDA18-23511 |
|---|---|---|---|

# GEOPAK SERIES SIZE 2 LED

Architectural Wallpack

TRP2/RDI2/QSP2 NEW

Cat.#

Job

Type

HUBBELL Outdoor Lighting

Approvals

## SPECIFICATIONS

**Applications:**
Medium sized architectural wallpacks in three stylish shapes accentuate building architecture and provide excellent illumination and uniformity

**Construction:**
- Die-cast aluminum housing and door
- Seven powder coat standard finishes, plus custom color options

**LED:**
- 24 or 32 high power LEDs deliver up to 10,800 lumens
- Up to 146 Lumens per watt
- Different lenses offer a variety of distribution patterns - Type I, II, III and IV (Forward throw)
- 3000K - 70 CRI, 4000K - 70 CRI, and 5000K - 70 CRI, CCT nominal

**Electrical:**
- Optional Dual Drivers & Dual Power Feeds for 50, 70 and 90 watt versions
- 120-277, 347 and 480 voltage, 50/60Hz
- Power factor ≥ 90%
- THD (Total Harmonic Distortion) <20%
- Ambient operating temperature -40°C to 40°C
- 20kA surge protection (series); Automatically takes fixture off-line when device is consumed

**Installation/Mounting:**
- Quick-mount adapter with gasket seal provides easy installation to wall or to recessed junction box (4" square junction box). Fixture attaches by two Allen-head hidden fasteners for tamper resistance.
- Black box accessory available for surface conduit application
- Optional inverted/up mounting (must specify when ordering)

**Options/Controls:**
- Drivers are 0-10V dimming standard
- Universal button photocontrol for dusk to dawn energy savings
- Photocell and occupancy sensor options available for complete on/off and dimming control
- Occupancy sensor options available for complete on/off and dimming control
- In addition, GeoPak Size 2 can be specified with SiteSync™ wireless control system for reduction in energy and maintenance cost while optimizing light quality 24/7. See ordering information or visit www. hubbell-lighting.com/sitesync for more details

**Listings:**
- IP65 rated housing
- DesignLights Consortium® (DLC) qualified. Please refer to the DLC website for specific product qualifications at www.designlights.org
- Zero uplight (U0), dark sky, neighbor friendly
- Drivers IP66 and RoHS compliant

**Battery Backup:**
- Intergral Battery Backup provides emergency lighting for the required 90 minute path of egress.
- Includes a long-life Lithium Iron Phosphate battery with optional battery heater for cold temperature application.
- Utilizes 4 LEDs in emergency mode with 657 lumens. Each of the 4 LEDs in emergency are designed to function independently in the unlikely event of a single LED malfunction
- Spectron® self-testing/self-diagnostic electronics are included standard
- Independent dedicated driver and LED array for battery/emergency mode operation.

**Warranty:**
For more information visit:
http://www.hubbelloutdoor.com/resources warranty/

## PRODUCT IMAGE(S)

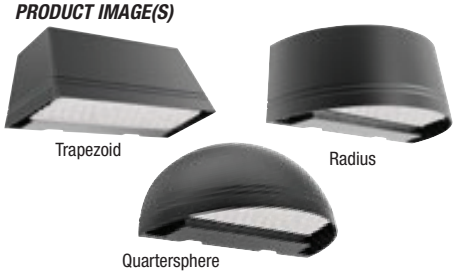


## DIMENSIONS

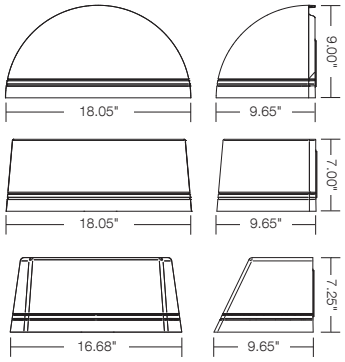


## SHIPPING INFORMATION

| Catalog Number | G.W(kg)/ CTN | Carton Dimensions | | |
|---|---|---|---|---|
| | | Length Inch (cm) | Width Inch (cm) | Height Inch (cm) |
| QSP2 | 17 (7.7) | 20.5 (52) | 10.5 (26) | 11 (28) |
| RDI2 | 18 (8.2) | 20.5 (52) | 9.5 (24) | 12 (30) |
| TRP2 | 16 (7.3) | 18.5 (47) | 9.5 (24) | 11.5 (29) |

## CERTIFICATIONS/LISTINGS

*3000K and warmer CCTs only

## ORDERING INFORMATION

ORDERING EXAMPLE: TRP2-24L30-3K7-2-UNV-DB

| FAMILY | LEDS - WATTAGE | CCT | DISTRIBUTION | VOLTAGE | FINISH | CONTROL OPTIONS | OPTIONS |
|---|---|---|---|---|---|---|---|
| **TRP2** Trapezoid | **24L-30** 24 LEDs, 30 watts | **3K7** 3000K, 70CRI | **1** Type I | **UNV** 120-277V | **BL** Black Textured | **PC** Button Photocontrol | **SF**[3] Single Fuse & Fuse Holder |
| **RDI2** Radius | **24L-50** 24 LEDs, 50 watts | **4K7** 4000K, 70CRI | **2** Type II | **120** 120V | **DB** Dark Bronze Textured | **SCP**[4,5] Programmable occupancy sensor, factory default is 10% light output | **DF**[3] Double Fuse & Fuse Holder |
| **QSP2** Qtr-sphere | **24L-70** 24 LEDs, 70 watts | **5K7** 5000K, 70CRI | **3** Type III | **208** 208V | **GT** Graphite Textured | **SCO**[4] Sensor Control, On/Off | **E**[3] Battery Pack (0ºC) |
| | **24L-90** 24 LEDs, 90 watts | | **4** Type IV | **240** 240V | **GYS** Light Gray Smooth | **SWP**[3,7] SiteSync Pre-Commission | **EH**[3] Battery Pack (-30oC) with heater |
| | **32L-70** 32 LEDs, 70 watts | | | **277** 277V | **PS** Platinum Silver Smooth | **SWPM**[3,4,7,8] SiteSync Pre-commission w/Occupancy Sensor | **2DR**[6] Dual Drivers |
| | **32L-90** 32 LEDs, 90 watts | | | **UHV**[1] 347/480V | **WH** White Textured | **SPEC SCP/SCO & SWPM MOUNT HEIGHT** | **2PF**[6] Dual Power Feeds |
| | | | | **347**[1] 347V | **CC** Custom Color | **-8F** Up to 8ft mount height | **CS** Comfort Shield |
| | | | | **480**[1] 480V | | **-20F** Up to 20ft mount height | |

**SECONDARY MOUNTING**
**BLANK** Downlight Only
**NV**[2] Inverted/Up Mounting

[1] 70 & 90 watt versions only
[2] Not available with SCP, SCO or SWPM sensor options
[3] Must specify voltage (120, 277 or 347V only for SWP & SWP, 120 or 277V only for E & EH)
[4] PCU option not applicable, included in sensor
[5] Must order minimum of one remote control to program dimming settings, 0-10V fully adjustable dimming with automatic daylight calibration and different time delay settings
[6] Not available with 30w version
[7] Must specify group and zone information at time or order. See www.HubbellLighting.com/products/sitesync for future details
[8] Specify time delay; dimming level and mounting height


© 2017 HUBBELL OUTDOOR LIGHTING, All Rights Reserved • For more information visit our website: **www.hubbelloutdoor.com** • Printed in USA

| BDA LIGHTING GROUP | **Project Name:** Iqaluit Water Treatment Plant | **Product Number:** QSP2-24L-50-5K7-4-UNV-BL<br>Notes: | **Type:** 401<br>BDA18-23511 |
|---|---|---|---|

## *ACCESSORIES (ORDER SEPARATELY)*

| Catalog Number | Description |
|---|---|
| **SCP-REMOTE*** | Remote control for SCP option. Order at least one per project to program and control dimming settings |
| **BB-GEO-XX** | Black box with 4 - 1/2" threaded conduit holes, specify finish by replacing "XX" with finish selection, eg. Dark Bronze "DB" |
| **SWUSB**** | SiteSync loaded on USB flash drive (Windows based only) |
| **SWTAB**** | SiteSync Windows Tablet |
| **SWBRG+** | SiteSync Wireless Bridge Node |

* Must order minimum of one remote control to program dimming settings, 0-10V fully adjustable dimming with automatic daylight calibration and different time delay settings.
** When ordering with SiteSync, one of the following interface options must be chosen an ordered separately. Each option contains the SiteSync License, GUI and Bridge Node.
\+ If needed, an additional Bridge Node can be ordered.

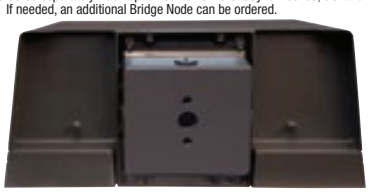

**BB-GEO-XX** – Mounted to luminaire

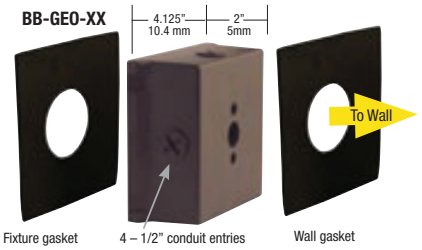


## *INPUT POWER CONSUMPTION*

| # OF LEDS | DRIVE CURRENT (mA) | INPUT VOLTAGE (V) | CURRENT (Amps) | SYSTEM POWER (w) |
|---|---|---|---|---|
| 24 | 350mA | 120 | 0.23 | 28 |
| | | 277 | 0.10 | 28 |
| | 625mA | 120 | 0.41 | 49 |
| | | 277 | 0.18 | 49 |
| | 900mA | 120 | 0.59 | 71 |
| | | 277 | 0.25 | 71 |
| | | 347 | 0.20 | 71 |
| | | 480 | 0.15 | 71 |
| | 1100mA | 120 | 0.72 | 87 |
| | | 277 | 0.31 | 87 |
| | | 347 | 0.25 | 87 |
| | | 480 | 0.18 | 87 |
| 32 | 650mA | 120 | 0.56 | 67 |
| | | 277 | 0.24 | 67 |
| | | 347 | 0.19 | 67 |
| | | 480 | 0.14 | 67 |
| | 850mA | 120 | 0.69 | 83 |
| | | 277 | 0.30 | 83 |
| | | 347 | 0.24 | 83 |
| | | 480 | 0.17 | 83 |

STANTEC PROJECT # 110126045
SUBMITTAL # ELE-004 Lighting

This review by Stantec is for general conformance with the design concept of Stantec's design of the:
☐ Architectural ☐ Structural ☐ Mechanical ☑ Electrical ☐ Other

component(s) only and does not mean that Stantec has verified or approves the shop drawing(s). The Contractor remains solely responsible for the shop drawing(s) and this review by Stantec does not relieve the Contractor of the Contractor's responsibility for errors or omissions in the shop drawing(s) or for meeting all requirements of the contract documents. This review does not mean that Stantec approves the detailed design inherent in the shop drawing, responsibility for which shall remain with the Contractor submitting same, nor does this review mean that Stantec accepts any deviation of the shop drawing(s) from the contract documents. The Contractor is responsible for confirming all dimensions and correlating them at the job site, for all construction means, methods and techniques, and for coordination of construction work of all trades, including coordination of all shop drawings.

Stantec
☑ REVIEWED
☐ REVIEWED, AS NOTED
☐ REVISE AND RESUBMIT
☐ NOT REVIEWED
DATE June 26, 2018
BY Chester Martinez, E.I.T.

## *PERFORMANCE DATA*

| | | | | 5K (5000K nominal, 70 CRI) | | | | | 4K (4000K nominal, 70 CRI) | | | | | 3K (3000K nominal, 70 CRI) | | | | |
|---|---|---|---|---|---|---|---|---|---|---|---|---|---|---|---|---|---|---|
| # OF LEDS | DRIVE CURRENT | SYSTEM WATTS | DIST. TYPE | LUMENS | LPW[1] | B | U | G | LUMENS | LPW[1] | B | U | G | LUMENS | LPW[1] | B | U | G |
| 24 | 350mA | 28 | 1 | 4,075 | 146 | 1 | 0 | 0 | 4,065 | 146 | 1 | 0 | 0 | 3,660 | 131 | 0 | 0 | 0 |
| | | | 2 | 3,747 | 134 | 1 | 0 | 1 | 3,738 | 134 | 1 | 0 | 1 | 3,366 | 121 | 1 | 0 | 1 |
| | | | 3 | 3,756 | 135 | 1 | 0 | 1 | 3,747 | 134 | 1 | 0 | 1 | 3,374 | 121 | 1 | 0 | 1 |
| | | | 4 | 3,656 | 131 | 0 | 0 | 1 | 3,647 | 131 | 0 | 0 | 1 | 3,284 | 118 | 0 | 0 | 1 |
| | 625mA | 49 | 1 | 6,329 | 130 | 1 | 0 | 0 | 6,313 | 130 | 1 | 0 | 0 | 5,685 | 117 | 1 | 0 | 0 |
| | | | 2 | 5,820 | 120 | 1 | 0 | 1 | 5,806 | 119 | 1 | 0 | 1 | 5,228 | 108 | 1 | 0 | 1 |
| | | | 3 | 5,833 | 120 | 1 | 0 | 2 | 5,819 | 120 | 1 | 0 | 2 | 5,240 | 108 | 1 | 0 | 2 |
| | | | 4 | 5,678 | 117 | 1 | 0 | 2 | 5,664 | 117 | 1 | 0 | 2 | 5,100 | 105 | 1 | 0 | 2 |
| | 900mA | 71 | 1 | 8,613 | 122 | 1 | 0 | 1 | 8,592 | 122 | 1 | 0 | 1 | 7,737 | 110 | 1 | 0 | 1 |
| | | | 2 | 7,921 | 112 | 1 | 0 | 2 | 7,902 | 112 | 1 | 0 | 2 | 7,115 | 101 | 1 | 0 | 2 |
| | | | 3 | 7,939 | 112 | 1 | 0 | 2 | 7,920 | 112 | 1 | 0 | 2 | 7,131 | 101 | 1 | 0 | 2 |
| | | | 4 | 7,728 | 109 | 1 | 0 | 2 | 7,709 | 109 | 1 | 0 | 2 | 6,942 | 98 | 1 | 0 | 2 |
| | 1100mA | 87 | 1 | 10,791 | 124 | 1 | 0 | 1 | 10,765 | 124 | 1 | 0 | 1 | 9,694 | 112 | 1 | 0 | 1 |
| | | | 2 | 9,924 | 114 | 2 | 0 | 2 | 9,900 | 114 | 1 | 0 | 2 | 8,915 | 103 | 1 | 0 | 2 |
| | | | 3 | 9,946 | 115 | 1 | 0 | 2 | 9,922 | 114 | 1 | 0 | 2 | 8,935 | 103 | 1 | 0 | 2 |
| | | | 4 | 9,682 | 112 | 1 | 0 | 2 | 9,659 | 111 | 1 | 0 | 2 | 8,696 | 100 | 1 | 0 | 2 |
| 32 | 650mA | 67 | 1 | 8,621 | 129 | 1 | 0 | 1 | 8,600 | 128 | 1 | 0 | 1 | 7,744 | 116 | 1 | 0 | 1 |
| | | | 2 | 7,928 | 118 | 1 | 0 | 2 | 7,909 | 118 | 1 | 0 | 2 | 7,122 | 106 | 1 | 0 | 2 |
| | | | 3 | 7,946 | 119 | 1 | 0 | 2 | 7,927 | 118 | 1 | 0 | 2 | 7,137 | 107 | 1 | 0 | 2 |
| | | | 4 | 7,735 | 115 | 1 | 0 | 2 | 7,716 | 115 | 1 | 0 | 2 | 6,948 | 104 | 1 | 0 | 2 |
| | 850mA | 83 | 1 | 10,806 | 130 | 1 | 0 | 1 | 10,780 | 130 | 1 | 0 | 1 | 9,705 | 117 | 1 | 0 | 1 |
| | | | 2 | 9,938 | 120 | 2 | 0 | 2 | 9,914 | 119 | 1 | 0 | 2 | 8,927 | 108 | 1 | 0 | 2 |
| | | | 3 | 9,960 | 120 | 1 | 0 | 2 | 9,936 | 120 | 1 | 0 | 2 | 8,947 | 108 | 1 | 0 | 2 |
| | | | 4 | 9,695 | 117 | 1 | 0 | 2 | 9,672 | 117 | 1 | 0 | 2 | 8,709 | 105 | 1 | 0 | 2 |


© 2016 HUBBELL OUTDOOR LIGHTING, All Rights Reserved • For more information visit our website: **www.hubbelloutdoor.com** • Printed in USA

| BDA LIGHTING GROUP | **Project Name:** Iqaluit Water Treatment Plant | **Product Number:** QSP2-24L-50-5K7-4-UNV-BL<br>Notes: | **Type:** 401<br>BDA18-23511 |
|---|---|---|---|

## PHOTOMETRIC REPORTS

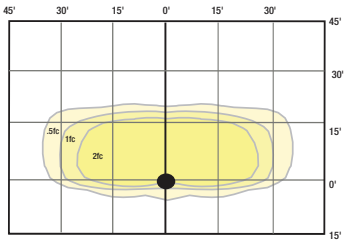


TRP2-24L-50-4K7-1
15" MOUNTING HEIGHT

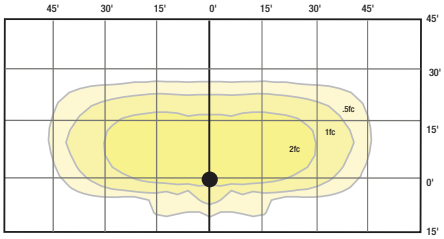


TRP2-24L-50-4K7-2
15" MOUNTING HEIGHT

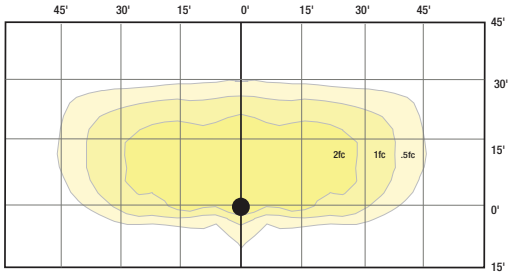


TRP2-24L-50-4K7-3
15" MOUNTING HEIGHT

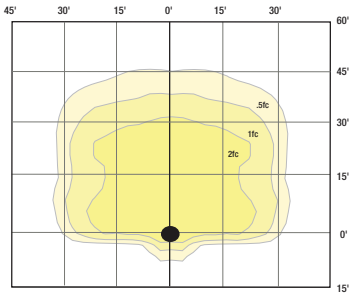


TRP2-24L-50-4K7-4
15" MOUNTING HEIGHT

## PHOTOMETRICS - BATTERY BACK UP

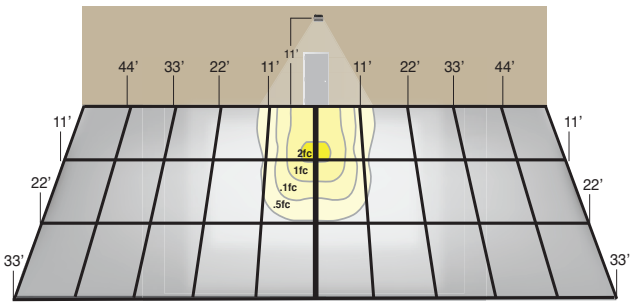


11' Mounting Height

Provides Life Safety Code average illuminance of 1.0 fc. Assumes open space with no obstructions and mounting height of 11'.

Diagrams for illustration purposes only, please consult factory for application layout.

## E & EH EMERGENCY BATTERY BACKUP



24 or 32 high power LEDs generate up to 11,000 lumens in normal mode and use 4 LEDs for up to 700 lumens in emergency mode.

## INVERTED MOUNTING

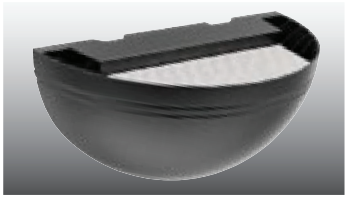

Inverted mounting capabilities for uplighting applications. Specially designed frosted acrylic diffuser softens output, improves uniformity and prevents water from collecting.

## COMFORT SHIELD



Comfort shield option utilizes a frosted acrylic lens that softens output and improves uniformity. Available from the factory or as an accessory for field installation.

## CONTROL OPTIONS



Programmable occupancy sensor offers greater control and energy savings with adjustable delay and dimming levels (Factory default is 10%)


© 2017 HUBBELL OUTDOOR LIGHTING, All Rights Reserved • For more information visit our website: **www.hubbelloutdoor.com** • Printed in USA

| BDA LIGHTING GROUP | **Project Name:** Iqaluit Water Treatment Plant | **Product Number:** NSL-RA-4-60-50K-W-WG-347<br>Notes: | **Type:** **404**<br>BDA18-23511 |
|---|---|---|---|

PEERLESS electric·électrique

| PROJECT: | DATE: |
|---|---|
| CAT. NO: | TYPE: |
| NOTES: | VOLTS: |

# NSL-RA

LED Narrow Strip Luminaire – Rounded Lens

LED

## GENERAL DESCRIPTION

LED luminaire for surface or suspended installation, featuring a rounded extruded ribbed frosted acrylic lens. Available in 2ft, 4ft and 8ft models that provide uniform illumination with the narrow design. Available individually or for continuous-row mounting for uniform continuous lighting. Ideal for general utility applications, including commercial, residential, retail and also works well in cove applications.



## SHIELDING

A rounded extruded ribbed frosted acrylic lens is standard.

## ELECTRICAL

L80 performance at 60,000 hours minimum.
120-270V or 347V
80 CRI Standard**
3000K 3500K 4000K 5000K

## FINISH

Standard finish is high gloss white polyester baked powder coat enamel.

GLOSSY / MATTE

*other colours available. Contact factory

## LENGTHS

| NOMINAL (ft) | ACTUAL(in) |
|---|---|
| 2 ft | 22.459" |
| 4 ft | 44.584" |
| 8 ft | 88.928" |

## CONSTRUCTION

Rigid one-piece body constructed from code gauge steel.

## CERTIFICATION

Approved to UL1598 and
CSA C22.2 No. 250 standards*
Rated for damp locations.

Check the DLC Qualified Products List at *designlights.org* to confirm which versions are qualified.

## MOUNTING

SURFACE MOUNTED

SUSPENDED

## SENSOR

**OC**= On/Off Occupancy control
**O5**= 100%-50% Hi/Low Occupancy control
Consult factory

*Normal temperature: -20 degrees Celsius to +25 degrees Celsius.
**Other dimming options, lumen options, 90CRI and lengths available. Consult Factory.

V1-2018/01/09

STANTEC PROJECT #: 110126045

SUBMITTAL # ELE-004 Lighting

This review by Stantec is for general conformance with the design concept of Stantec's design of the:

☐ Architectural ☐ Structural ☐ Mechanical ☑ Electrical ☐ Other

component(s) only and does not mean that Stantec has verified or approves the shop drawing(s). The Contractor remains solely responsible for the shop drawing(s) and this review by Stantec does not relieve the Contractor of the Contractor's responsibility for errors or omissions in the shop drawing(s) or for meeting all requirements of the contract documents. This review does not mean that Stantec approves the detailed design inherent in the shop drawing, responsibility for which shall remain with the Contractor submitting same, nor does this review mean that Stantec accepts any deviation of the shop drawing(s) from the contract documents. The Contractor is responsible for confirming all dimensions and correlating them at the job site, for all construction means, methods and techniques, and for coordination of construction work of all trades, including coordination of all shop drawings.

Stantec

☑ REVIEWED
☐ REVIEWED, AS NOTED
☐ REVISE AND RESUBMIT
☐ NOT REVIEWED

DATE June 26, 2018

BY Chester Martinez, E.I.T.

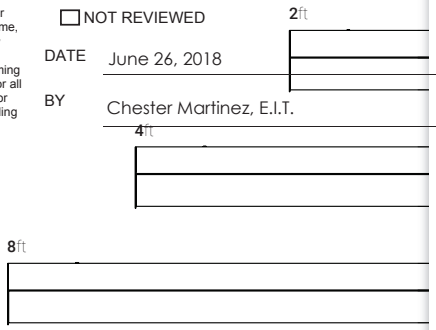


## ORDERING INFORMATION

NSL – RA – – – – – – NO OPTION – NO OPTION –

| OPTICAL DESIGN | LENGTH | LUMENS | CCT | FINISH | *OPTIONAL* | MOUNTING *OPTIONAL* | POWER CORD *OPTIONAL* | DRIVER |
|---|---|---|---|---|---|---|---|---|
| **RA** = Rounded Acrylic | **2** = 2' | **15** = 1500lm<br>**23** = 2300lm<br>**30** = 3000lm | **30K** = 3000K<br>**35K** = 3500K<br>**40K** = 4000K<br>**50K** = 5000K | **GLOSSY**<br>**W** = White Housing<br>**B** = Black Housing<br>**G** = Metallic Grey Housing<br>**MATTE**<br>**WM** = White Matte Housing<br>**BM** = Black Matte Housing<br>**GM** = Grey Matte Housing | **WG** = Wireguard | **A4** = Aircraft 48in<br>**A5** = Aircraft 60in<br>**A8** = Aircraft 96in<br>**A12** = Aircraft 144in<br>*for row mounting option, Consult factory | **C1** = Cord 5ft<br>**C2** = Cord 6ft<br>**C4** = Cord 9ft<br>**C7** = Cord 13ft | **MV** = Standard 120V-277V Dimming (0-10v)<br>**347** = Standard 347V Dimming (0-10v) |
| | **4** = 4' | **29** = 2900lm<br>**30** = 3000lm<br>**40** = 4000lm<br>**46** = 4600lm<br>**60** = 6000lm | | | | | | |
| | **8** = 8' | **60** = 6000lm<br>**80** = 8000lm<br>**96** = 9600lm<br>**120** = 12000lm | | | | | | |

| BDA LIGHTING GROUP | **Project Name:** Iqaluit Water Treatment Plant | **Product Number:** NSL-RA-4-60-50K-W-WG-347<br>Notes: | **Type:** **404**<br>BDA18-23511 |
|---|---|---|---|

# PEERLESS electric·électrique

# NSL-RA

LED Narrow Strip Luminaire – Rounded Lens

## MODELS

**NSL-RA-2**

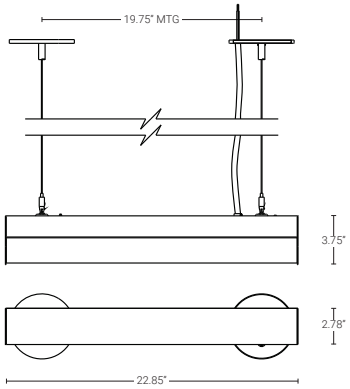


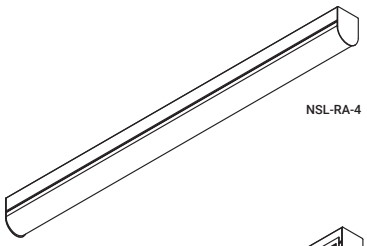

**NSL-RA-4**

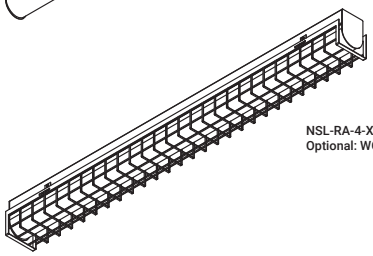

**NSL-RA-4-XX-XXK-X-WG-XX-XX**
**Optional: WG** = Wireguard

**NSL-RA-4**

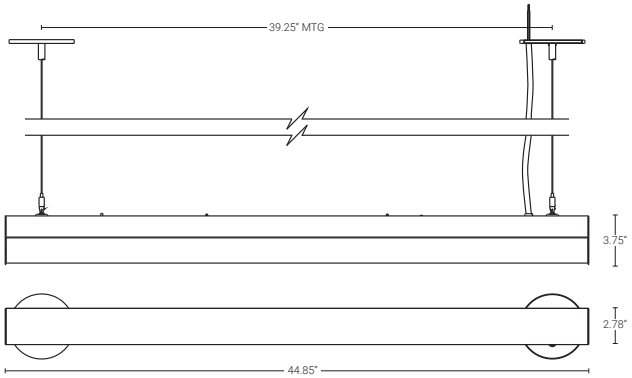


**NSL-RA-8**

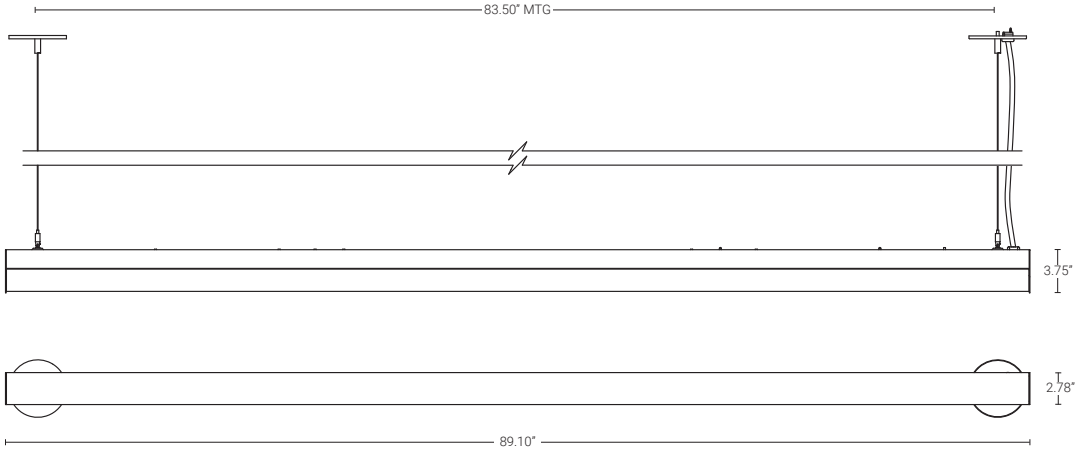


**Head Office - Montreal, Québec**
Tel.: (514) 595-1671
Email: info@peerless-electric.com

**Toronto, Ontario**
Tel.: (416) 751-5644
Email: info@peerless-electric.com

**Western Canada**
Tel.: (403) 479-5943 / (514) 595-1671
Email: tkolody@peerless-electric.com

Specifications are subject to change. Please confirm latest specifications prior to placing order.

| BDA LIGHTING GROUP | **Project Name:** Iqaluit Water Treatment Plant | **Product Number:** NSL-RA-4-60-50K-W-WG-347<br>Notes: | **Type:** 405<br>BDA18-23511 |
|---|---|---|---|

PEERLESS electric·électrique

| PROJECT: | DATE: |
|---|---|
| CAT. NO: | TYPE: |
| NOTES: | VOLTS: |

STANTEC PROJECT #: 110126045 SUBMITTAL # ELE-004 Lighting

This review by Stantec is for general conformance with the design concept of Stantec's design of the:

☐ Architectural ☐ Structural ☐ Mechanical ☑ Electrical ☐ Other

component(s) only and does not mean that Stantec has verified or approves the shop drawing(s). The Contractor remains solely responsible for the shop drawing(s) and this review by Stantec does not relieve the Contractor of the Contractor's responsibility for errors or omissions in the shop drawing(s) or for meeting all requirements of the contract documents. This review does not mean that Stantec approves the detailed design inherent in the shop drawing, responsibility for which shall remain with the Contractor submitting same, nor does this review mean that Stantec accepts any deviation of the shop drawing(s) from the contract documents. The Contractor is responsible for confirming all dimensions and correlating them at the job site, for all construction means, methods and techniques, and for coordination of construction work of all trades, including coordination of all shop drawings.

Stantec

☑ REVIEWED
☐ REVIEWED, AS NOTED
☐ REVISE AND RESUBMIT
☐ NOT REVIEWED

DATE June 26, 2018

BY Chester Martinez, E.I.T.



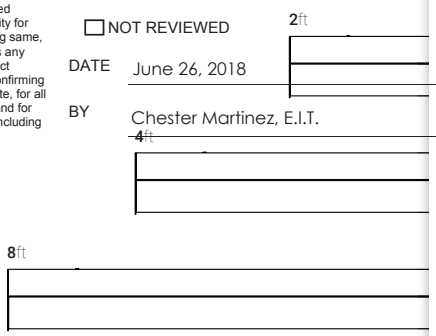


# NSL-RA

LED Narrow Strip Luminaire – Rounded Lens

LED

## GENERAL DESCRIPTION

LED luminaire for surface or suspended installation, featuring a rounded extruded ribbed frosted acrylic lens. Available in 2ft, 4ft and 8ft models that provide uniform illumination with the narrow design. Available individually or for continuous-row mounting for uniform continuous lighting. Ideal for general utility applications, including commercial, residential, retail and also works well in cove applications.

## SHIELDING

A rounded extruded ribbed frosted acrylic lens is standard.

## ELECTRICAL

L80 performance at 60,000 hours minimum.
120-270V or 347V
80 CRI Standard**
3000K 3500K 4000K 5000K

## FINISH

Standard finish is high gloss white polyester baked powder coat enamel.

GLOSSY / MATTE

*other colours available. Contact factory

## LENGTHS

| NOMINAL (ft) | ACTUAL(in) |
|---|---|
| 2 ft | 22.459" |
| 4 ft | 44.584" |
| 8 ft | 88.928" |

## CONSTRUCTION

Rigid one-piece body constructed from code gauge steel.

## CERTIFICATION

Approved to UL1598 and
CSA C22.2 No. 250 standards*
Rated for damp locations.

Check the DLC Qualified Products List at *designlights.org* to confirm which versions are qualified.

## MOUNTING

SURFACE MOUNTED

SUSPENDED

## SENSOR

**OC**= On/Off Occupancy control
**O5**= 100%-50% Hi/Low Occupancy control
Consult factory

*Normal temperature: -20 degrees Celsius to +25 degrees Celsius.
**Other dimming options, lumen options, 90CRI and lengths available. Consult Factory.

V1-2018/01/09

**SUSPENSION NOT INCLUDED SUPPLIED BY OTHERS**

## ORDERING INFORMATION

NSL – RA – – – – – – NO OPTION – NO OPTION –

| OPTICAL DESIGN | LENGTH | LUMENS | CCT | FINISH | *OPTIONAL* | MOUNTING *OPTIONAL* | POWER CORD *OPTIONAL* | DRIVER |
|---|---|---|---|---|---|---|---|---|
| **RA** = Rounded Acrylic | **2** = 2' | **15** = 1500lm<br>**23** = 2300lm<br>**30** = 3000lm | **30K** = 3000K<br>**35K** = 3500K<br>**40K** = 4000K<br>**50K** = 5000K | **GLOSSY**<br>**W** = White Housing<br>**B** = Black Housing<br>**G** = Metallic Grey Housing<br>**MATTE**<br>**WM** = White Matte Housing<br>**BM** = Black Matte Housing<br>**GM** = Grey Matte Housing | **WG** = Wireguard | **A4** = Aircraft 48in<br>**A5** = Aircraft 60in<br>**A8** = Aircraft 96in<br>**A12** = Aircraft 144in<br>*for row mounting option, Consult factory | **C1** = Cord 5ft<br>**C2** = Cord 6ft<br>**C4** = Cord 9ft<br>**C7** = Cord 13ft | **MV** = Standard 120V-277V Dimming (0-10v)<br>**347** = Standard 347V Dimming (0-10v) |
| | **4** = 4' | **29** = 2900lm<br>**30** = 3000lm<br>**40** = 4000lm<br>**46** = 4600lm<br>**60** = 6000lm | | | | | | |
| | **8** = 8' | **60** = 6000lm<br>**80** = 8000lm<br>**96** = 9600lm<br>**120** = 12000lm | | | | | | |

| BDA LIGHTING GROUP | **Project Name:** Iqaluit Water Treatment Plant | **Product Number:** NSL-RA-4-60-50K-W-WG-347<br>Notes: | **Type:** **405**<br>BDA18-23511 |
|---|---|---|---|

# PEERLESS electric·électrique

# NSL-RA

LED Narrow Strip Luminaire – Rounded Lens

## MODELS

**NSL-RA-2**

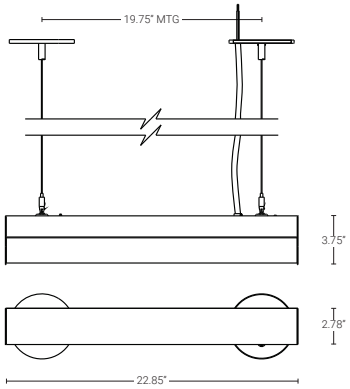


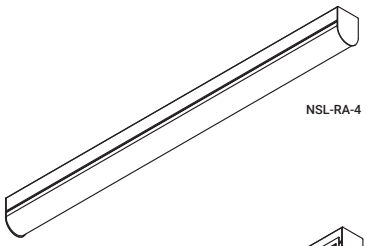

**NSL-RA-4**

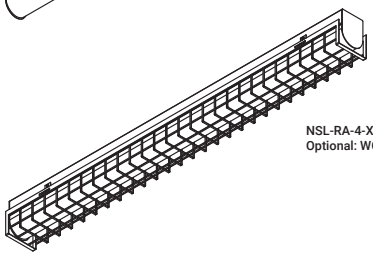

**NSL-RA-4-XX-XXK-X-WG-XX-XX**
**Optional: WG** = Wireguard

**NSL-RA-4**

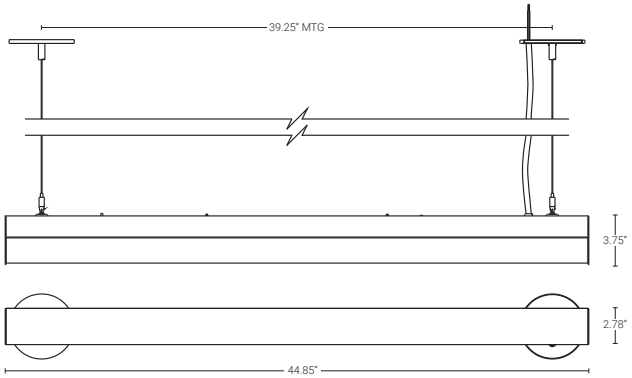


**NSL-RA-8**

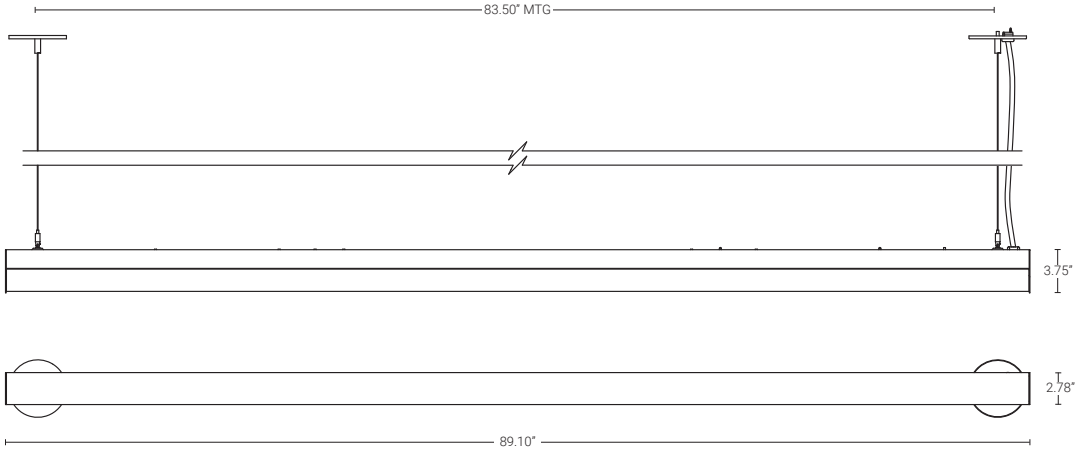


**Head Office - Montreal, Québec**
Tel.: (514) 595-1671
Email: info@peerless-electric.com

**Toronto, Ontario**
Tel.: (416) 751-5644
Email: info@peerless-electric.com

**Western Canada**
Tel.: (403) 479-5943 / (514) 595-1671
Email: tkolody@peerless-electric.com

Specifications are subject to change. Please confirm latest specifications prior to placing order.

**Hazardous Area LED Lighting**
Champ® FMV LED Luminaires

**GUILLEVIN OTTAWA**
**PO# 2010-RON971364D**
**drawings issued 2018-06-22**

**FMV11LCY/UNV34 76 page 6**

CROUSE-HINDS SERIES

# Champ® FMV

## LED floodlights for harsh and hazardous areas









Type 402

EATON
*Powering Business Worldwide*





Type 402

# Safe. Reliable. Efficient.

Featuring the industry's broadest range of LED luminaires for harsh, hazardous and industrial environments, Eaton's Crouse-Hinds can deliver a lighting solution that performs reliably in even the worst operating conditions. All the while reducing your energy, maintenance and manpower costs.

## Why LED?

**Energy efficiency**
LED average energy consumption is significantly less than traditional fluorescent and HID fixtures

**Start/restart time**
Instant illumination vs. 10 minute restrike time for HID

**Light quality**
Higher color rendering compared to fluorescent and HID

**Environmental benefits**
Mercury-free LED eliminates disposal costs and lower energy consumption for a smaller carbon footprint

## Why Crouse-Hinds?

**Industry-best reliability**
Built to withstand a wide array of applications

**Thermal management**
Effective heat sinking ensures longer life

**Quality of light**
Custom optics designed to maximize light distribution and intensity

**Globally certified**
Designed to global specifications for IEC and NEC applications

**Serviceable drivers**
Easy access to drivers for service or replacement

# Why FMV LED?

Type 402

**Reliable floodlights.** FMV LED luminaires are engineered to deliver high lumen output and maintenance-free long life in the toughest conditions.

### Versatile design

- Can be used for outdoor or indoor applications, and for a wide range of mounting heights depending on model and light level requirement

### Smaller and lighter

- 25% smaller footprint than previous model
- 10 lbs. (4.5 kg) less weight than previous model

### Full frame yoke

- Designed to utilize the SFA6 slipfitter and SWB6 wall mount bracket, making it ideal for retrofit or new installations



### High lumen output:

- Up to 117 lumens per watt
- Up to 72% energy savings over traditional HID fixtures (compared to 400W MH)



### Multiple lens options:

- Tempered clear glass lens standard
- Polycarbonate and diffused glass lens options available

### Rugged heat sink

- Heat sink designed to perform and provide maximum light levels in high ambient temperatures up to +65°C and as low as -40°C
- Thick walled castings make for a tough, rugged housing that keeps the internal driver and LED temperature down

## LED vs. HID savings at a glance

Why are so many facilities making the switch from HID to LED?

The numbers say it all.

**FMV13L/UNV1 vs. 400 watt HID**

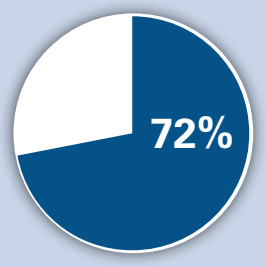


72% REDUCTION IN ENERGY COSTS

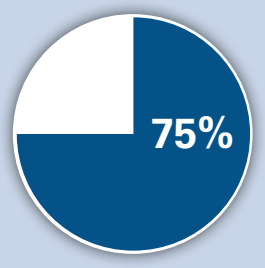


75% LOWER TOTAL COST OF OWNERSHIP




100% MAINTENANCE REDUCTION

**Assumptions:** Calculations based on overall life of the LED system. Energy cost of $.09 per kilowatt; 24 hour per day operation; labor rate of $75 each for 2 workers; average time for fixture maintenance of 1 hour.

# Features & specifications

### Champ FMV LED floodlights

Champ FMV LED floodlights are designed to provide full-spectrum, crisp, white light. Seven versions of the Champ FMV are available, from 3,000 to 15,000 lumens, providing ideal solutions for a wide range of harsh and hazardous applications.

**Up to 75% reduction in energy costs and 150,000 hours of continuous operation.**

| Model number | Nominal lumens* | Wattage | Lumens per watt | Equivalent HID luminaire |
|---|---|---|---|---|
| **FMV3L** | 3,189 | 28 | 114 | 70W-100W |
| **FMV5L** | 5,183 | 45 | 115 | 100W-150W |
| **FMV7L** | 7,095 | 62 | 114 | 150W-175W |
| **FMV9L** | 9,132 | 79 | 116 | 175W-250W |
| **FMV11L** | 11,107 | 99 | 112 | 250W-400W |
| **FMV13L** | 13,100 | 112 | 117 | 400W |
| **FMV15L** | 15,181 | 131 | 116 | 450W |

*Tolerance +/- 10%; @120 VAC, 25°C ambient, 7x6 optics.

### Applications:

- Oil and gas refineries, drilling rigs, petrochemical facilities, food and beverage facilities, platforms, loading docks, tunnels, outdoor wall and stanchion mounted general area lighting, and where flammable vapors, gases, ignitable dusts, fibers or flyings are present
- Locations requiring continuous and consistent light levels in extreme ambient temperatures
- Where extremely corrosive, wet, dusty, hot and/or cold conditions exist
- IP66, Type 4X, marine, wet locations and hose-down environments
- Classified and hazardous locations

### LED system:

- Cool white (5000K, 70 CRI) and warm white (3000K, 80 CRI)
- Custom designed optics – 7x6 standard, 3x3 optional (3L-11L)

### Champ FMV LED benefits:

- Instant illumination and restrike
- Better visibility with crisp, white light
- Cold temperature operation / no warm-up required
- Minimum T3C temperature rating – safely operate in the most hazardous environments and any non-hazardous location
- Serviceable drivers
- Easy installation – yoke design to mount to SFA6
- Energy-efficient technology – up to 72% energy savings over HID fixtures
- 60,000 hours of rated life at 55°C – eliminates need for frequent lamp replacement
- Contains no mercury or other hazardous substances
- Shock- and vibration-resistant solid-state luminaires have no filaments or glass components that could break – greatly reduces the risk of premature failure
- Operating ambient -40°C to 65°C (NEC only; IEC -40°C to 55°C)
- 5 year fixture warranty‡

‡Extension of standard terms and conditions to five years. Refer to page 2 of the D-0914 authorized distributor price book for Crouse-Hinds standard Terms and Conditions.

### LED system lifetime rated versus economic life:

Type 402

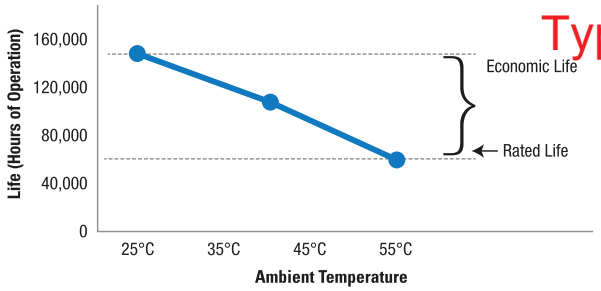


**Economic life can range anywhere between 50,000 to 150,000 hours, or 5 to 20 years of maintenance-free operation.**

**Fixture life and years of maintenance-free operation**

| Ambient temperature | Fixture life (hours) | No. of years at 24 hours usage | No. of years at 12 hours usage |
|---|---|---|---|
| 25°C | 150,000 | 17 | 34 |
| 40°C | 90,000 | 10 | 20 |
| 55°C | 60,000 | 7 | 14 |

*50,000 hours of life at 65°C ambient.

### Fixture life:

- Rated life of 60,000 hours @ 55°C operating ambient and 24/7 continuous operation for 365 days
- Economic life of 150,000 hours @ 25°C ambient
- L70 LED life >300,000 hours @ 55°C

### Electrical ratings:

| Model number | Input power (watts) | Input amps at 120-277 VAC |
|---|---|---|
| **FMV3L** | 28.0 - 29.1 | 0.24 - 0.11 |
| **FMV5L** | 45.4 - 45.8 | 0.38 - 0.18 |
| **FMV7L** | 61.8 - 62.5 | 0.52 - 0.24 |
| **FMV9L** | 78.8 - 80.3 | 0.66 - 0.31 |
| **FMV11L** | 98.8 - 99.9 | 0.83 - 0.37 |
| **FMV13L** | 111.8 - 112.4 | 0.94 - 0.42 |
| **FMV15L** | 131.4 - 131.5 | 1.10 - 0.48 |

| FMV3L - FMV15L | |
|---|---|
| **Voltage range, VAC*** | 100-277V @ 50/60 Hz, 347-480V @ 50/60 Hz |
| **Voltage range, VDC*** | 108-250V |
| **Power factor** | >0.9 |

*NEC voltage; see drivers below for IEC voltage.

### Standard materials:

- Lamp housing and adapter – die cast aluminum with Corro-free™ epoxy powder coat
- Lens – heat- and impact-resistant glass (standard)
- Gaskets – silicone and neoprene
- External hardware – stainless steel

### Qualifications and compliances:

- DesignLights Consortium® Qualified (some models are not DLC qualified)*

* Approved models include: FMV3L/UNV1; FMV5L/UNV1; FMV7L/UNV1; FMV9L/UNV1; FMV11L/UNV1; FMV13L/UNV1; FMV3L/UNV34; FMV5L/UNV34; FMV7L/UNV34; FMV9L/UNV34; FMV11L/UNV34; FMV13L/UNV34

7x6 optics on all approved models; 3x3 optics not DLC approved.

Refer to www.designlights.org Qualified Products List under family models for full listing details. Not all models are approved for all application categories.

**Certifications and compliances:**

# Type 402

**NEC and CEC:**

- Class I, Division 2, Groups A, B, C, D; Class I, Zone 2; Class II, Groups E, F, G; Simultaneous Presence; Class III
- Type 4X, IP66

**UL Standards:**

- UL844; UL1598; UL1598A; UL8750

**CSA Standard:**

- CSA C22.2 No. 137

**IEC Standards:**

- IECEx UL 15.0029
- Ex nA IIC T5 Gc Tamb -40°C to +40°C
- Ex nA IIC T4 Gc Tamb -40°C to +55°C
- Ex tb IIIC T65 Db Tamb -40°C to +40°C
- Ex tb IIIC T80 Db Tamb -40°C to +55°C

**ATEX/CE:**

- CE0359 DEMKO 15 ATEX 1377
- CE0359 DEMKO 15 ATEX 1383
- Ⓔx II 3 G Ex nA IIC T5 Gc Tamb -40°C to +40°C
- Ⓔx II 3 G Ex nA IIC T4 Gc Tamb -40°C to +55°C
- Ⓔx II 2 D Ex tb IIIC T65 Db Tamb -40°C to +40°C
- Ⓔx II 2 D Ex tb IIIC T80 Db Tamb -40°C to +55°C



**Temperature codes:**

| Model | Ambient temperature | Class I, Div. 2 | Class II, Div. 1 | Simultaneous rating Class I, Div. 2, Div. 1 | Class I, Zone 2 | ATEX 3G | ATEX 2D | Minimum wire temperature |
|---|---|---|---|---|---|---|---|---|
| FMV3L-FMV15L | 40°C | T5 | T4 | T4 | T5 | T5 | T65 | 90°C |
| | 55°C | T4A | T3C | T3C | T4 | T4 | T80 | 90°C |
| | 65°C | T4A | T3C | T3C | T4 | – | – | 90°C |

**Weights and dimensions:**

| Model number | Lbs. | Kg. | Width in. | Width mm. | Height in. | Height mm. | Depth in. | Depth mm. |
|---|---|---|---|---|---|---|---|---|
| FMV3L-FMV7L | 30.7 | 13.9 | 15.5 | 393.7 | 12.0 | 304.8 | 7.0 | 177.8 |
| FMV9L-FMV15L | 31.8 | 14.4 | 15.5 | 393.7 | 12.0 | 304.8 | 7.0 | 177.8 |

**Drivers:**

| Option | FMV3L - FMV15L |
|---|---|
| /UNV1 | NEC: 100-277 VAC, 50/60 Hz; 108-250 VDC<br>IEC: 100-252 VAC, 50/60 Hz; 111-227 VDC |
| /UNV34 | NEC: 347-480 VAC, 50/60 Hz<br>IEC: 385-436 VAC, 50/60 Hz |

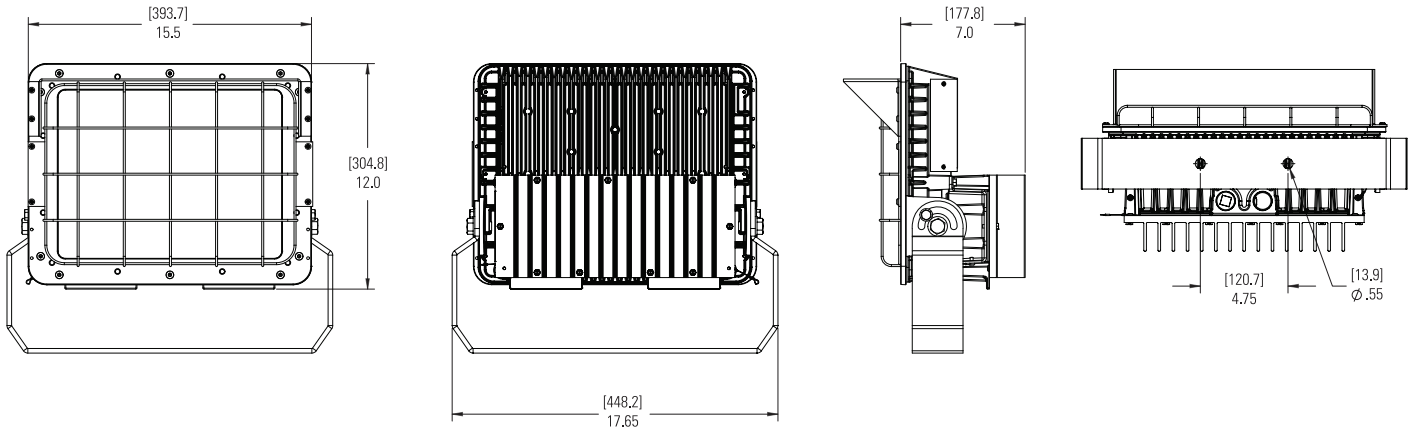

# Ordering information

**Part number example**

~~FMV5LCY/UNV1D 76 S903~~

**GUILLEVIN OTTAWA**
**PO# 2010-RON971364D**
**drawings issued 2018-06-22**

**FMV11LCY/UNV34 76**

~~FMV 5L C Y /UNV1 D 76 S903~~

**Model**

| | |
|---|---|
| FMV | NEC & IEC model |

**Light source/intensity**

| | |
|---|---|
| 3L | 3,189 nominal lumens* |
| 5L | 5,183 nominal lumens* |
| 7L | 7,095 nominal lumens* |
| 9L | 9,132 nominal lumens* |
| 11L | 11,107 nominal lumens* |
| 13L | 13,100 nominal lumens* |
| 15L | 15,181 nominal lumens* |

*7x6 model.

**Color temperature**

| | |
|---|---|
| C | 5000K, 70 CRI (cool white) |
| W | 3000K, 80 CRI (warm white) |

**Voltage**

| | |
|---|---|
| /UNV1 | 100-277 VAC, 50/60 Hz; 108-250 VDC |
| /UNV34 | 347-480 VAC 50/60 Hz |

**Mount**

| | |
|---|---|
| Y | Yoke |

**Options**

| | |
|---|---|
| S886 | Two TMCX cable glands of like thread installed |
| S891 | Diffused glass lens |
| S903 | Polycarbonate lens |

**Entries**

| | |
|---|---|
| BLANK | ¾" NPT |
| M20 | 20mm entry |
| M25 | 25mm entry |

**Optical distribution**

| | |
|---|---|
| 76 | 7x6 floodlight pattern optics |
| 33* | 3x3 floodlight pattern optics |

*3L - 11L only.

**Dimming**

| | |
|---|---|
| D* | Dimmable driver |
| BLANK | Non-dimmable driver |

*Dimmable driver option only available for NEC rated models.

**Accessories (ordered separately)**

| | |
|---|---|
| DSV2 | Bolt-on visor |
| P62 | Bolt-on wire guard |
| SC831 | Safety cable |
| SFA6 | Floodlight slipfitter |
| SWB6 | Slipfitter wall mount adapter |

Type 402

STANTEC PROJECT #: 110126045

This review by Stantec is for general conformance with the design concept of Stantec's design of the:
☐ Architectural ☐ Structural ☐ Mechanical ☑ Electrical ☐ Other

component(s) only and does not mean that Stantec has verified or approves the shop drawing(s). The Contractor remains solely responsible for the shop drawing(s) and this review by Stantec does not relieve the Contractor of the Contractor's responsibility for errors or omissions in the shop drawing(s) or for meeting all requirements of the contract documents. This review does not mean that Stantec approves the detailed design inherent in the shop drawing, responsibility for which shall remain with the Contractor submitting same, nor does this review mean that Stantec accepts any deviation of the shop drawing(s) from the contract documents. The Contractor is responsible for confirming all dimensions and correlating them at the job site, for all construction means, methods and techniques, and for coordination of construction work of all trades, including coordination of all shop drawings.

SUBMITTAL # ELE-004 Lighting

Stantec

☑ REVIEWED
☐ REVIEWED, AS NOTED
☐ REVISE AND RESUBMIT
☐ NOT REVIEWED

DATE June 26, 2018

BY Chester Martinez, E.I.T.

# Photometric data

Type 402

## 7x6 optics

**FMV13L Height: 40 ft.; Tilt angle: 45°**

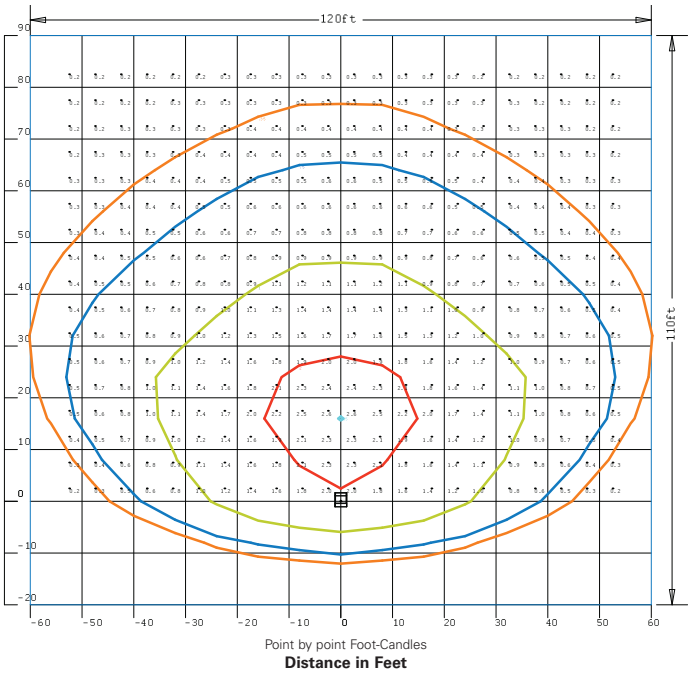


**Effective projected area (ft.-sq.):**

| Position | FMV3L - FMV15L |
|---|---|
| @ 0° Tilt | 1.5 |
| @ 45° Backwards tilt | 1.1 |
| @ 60° Forward tilt | 0.8 |

**Lumen output for glass lens models**

| Optic | FMV3L | FMV5L | FMV7L | FMV9L | FMV11L | FMV13L | FMV15L |
|---|---|---|---|---|---|---|---|
| 7x6 | 3,189 | 5,183 | 7,095 | 9,132 | 11,107 | 13,100 | 15,181 |
| 3x3 | 3,064 | 5,038 | 7,000 | 8,962 | 10,917 | – | – |

**Lumen output for diffused glass lens (S891) models**

| Optic | FMV3L | FMV5L | FMV7L | FMV9L | FMV11L | FMV13L | FMV15L |
|---|---|---|---|---|---|---|---|
| 7x6 | 2,637 | 4,287 | 5,878 | 7,459 | 8,994 | 10,613 | 12,445 |
| 3x3 | 2,546 | 4,179 | 5,806 | 7,433 | 9,055 | – | – |

**Lumen output for polycarbonate lens (S903) models**

| Optic | FMV3L | FMV5L | FMV7L | FMV9L | FMV11L | FMV13L | FMV15L |
|---|---|---|---|---|---|---|---|
| 7x6 | 3,017 | 4,903 | 6,712 | 8,639 | 10,507 | 12,393 | 14,361 |
| 3x3 | 2,924 | 4,808 | 6,680 | 8,552 | 10,418 | – | – |

## 3x3 optics

**FMV11L Height: 30 ft.; Tilt angle: 45°**

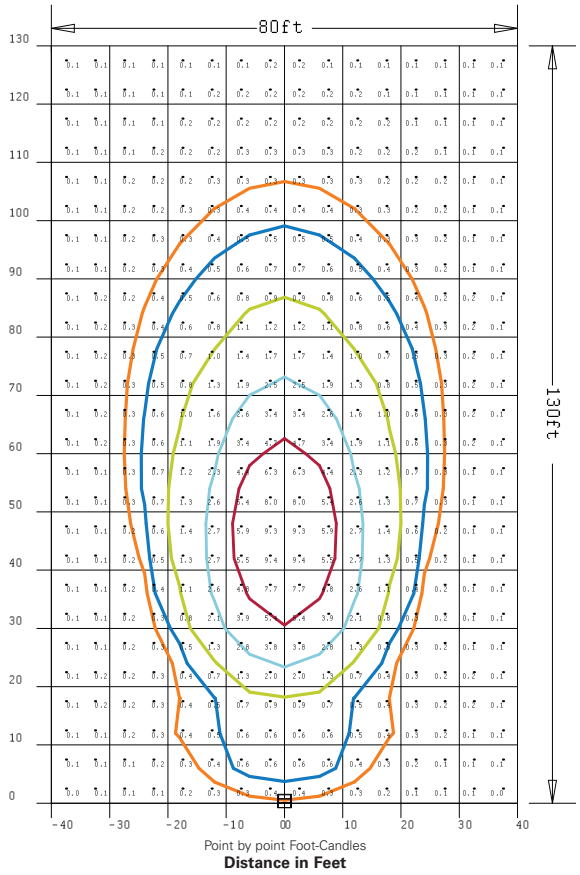




Higher average footcandles/lux, uniformity and distribution coverage with 72% less energy consumption compared to 400W metal halide.

# Type 402


**U.S. (global headquarters): Eaton's Crouse-Hinds business**

1201 Wolf Street
Syracuse, NY 13208

(866) 764-5454
FAX: (315) 477-5179
FAX Orders Only:
(866) 653-0640

crousecustomerctr@eaton.com

**Canada**

Toll Free: 800-265-0502
FAX: (800) 263-9504
FAX Orders only: (866) 653-0645

**Eaton Middle East**

9714-8066100
FAX: 9714-8894813

chmesales@eaton.com

**Korea**

82-2-3484-6783
82-2-3484-6778

CCHK-sales@
cooperindustries.com

**Mexico/Latin America/Caribbean**

52-555-804-4000
FAX: 52-555-804-4020

ventascentromex@eaton.com

**Singapore**

65-6645-9888
FAX: 65-6297-4819

chsi-sales@
cooperindustries.com

**Australia**

61-2-8787-2777
FAX: 61-2-9609-2342

CEASales@
cooperindustries.com

**Europe (Germany)**

49 (0) 6271 806-500
49 (0) 6271 806-476

sales.CCH.de@
cooperindustries.com

**China**

86-21-2899-3600
FAX: 86-21-2899-4055

cchsales@
cooperindustries.com

**India**

91-124-4683888
FAX: 91-124-4683899

cchindia@eaton.com


**For more information:**

If further assistance is required, please contact an authorized Eaton Distributor, Sales Office, or Customer Service Department.


**Eaton's Crouse-Hinds**
1201 Wolf Street
Syracuse, NY 13208
Crouse-Hinds.com

**Eaton**
1000 Eaton Boulevard
Cleveland, OH 44122
United States
Eaton.com



© 2015 Eaton
All Rights Reserved


Printed in USA
Publication No. 5242-1215
December 2015



Eaton is a registered trademark.

All other trademarks are property of their respective owners.


Powering Business Worldwide

**GUILLEVIN OTTAWA**
**PO# 2010-RON971364D**
**drawings issued 2018-06-22**

**VMV5L2A/UNV34 page 8**

# Champ® VMV

## LED luminaires for hazardous areas



## 3,000 to 25,000 lumen LED high bay luminaires



Type 403

EATON
*Powering Business Worldwide*



Champ® VMV LED

# Safe. Reliable. Efficient.

Type 403

Featuring the industry's broadest range of LED luminaires for harsh, hazardous and industrial environments, Eaton's Crouse-Hinds can deliver a lighting solution that performs reliably in even the worst operating conditions. All the while reducing your energy, maintenance and manpower costs.

## Why LED?

**Useful life**
Rated life is up to 60,000 hours of maintenance-free and safe operation

**Energy efficiency**
LED average energy consumption is significantly less than traditional fluorescent and HID fixtures

**Start/restart time**
Instant illumination versus 10 minute restrike time for HID

**Light quality**
Higher color rendering compared to fluorescent and HID

**Environmental benefits**
Mercury-free LED eliminates disposal costs and lower energy consumption for a smaller carbon footprint

## Why Crouse-Hinds?

**Rugged design**
Built to withstand extreme temperatures, vibration, water and dust

**High efficacy**
Up to 124 lumens per watt (model dependent)

**Thermal management**
Effective heat sinking ensures longer life

**Quality of light**
Custom optics designed to maximize light distribution and intensity

**Versatile mounting**
LED fixtures are compatible with Crouse-Hinds' HID installed base

# Why Champ VMV LED? Type 403

**Rugged mid to high bay solutions.** Champ VMV LED luminaires are engineered to provide maintenance-free operation while delivering long life and high lumen performance.



**Built to last:**

- Type 4X rated
- Impact-resistant lens sealed from the outside environment provides ingress protection against water and dust
- Die cast aluminum LED housing provides efficient thermal path to heat sink assembly
- Vertical fin design facilitates air flow and dust shedding

**Simple installation and replacement:**

- Contractor-friendly design is ideal for both retrofit and new construction
- Easy to retrofit using existing HID Champ mounting module
- Compact modular design for easy component replacement and future upgrades
- Available with lever lock connectors and standard three-pole terminal block



**Custom optics:**

- Type I, III and V optics designed to maximize light distribution and intensity*

* Type V optics standard.

**Increased efficiency and durability:**

- Up to 124 lumens per watt
- Economic life: 7-20 years



VMV3L-VMV11L

**optimized for 8-30 foot mounting heights**



VMV13L & VMV17L



VMV21L & VMV25L

**optimized for 30-60 foot mounting heights**

## LED vs. HID savings at a glance

Why are so many facilities making the switch from HID to LED?

The numbers say it all.

**VMV7L vs. 175 Watt MH**

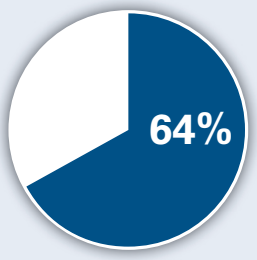


64% REDUCTION IN ENERGY COSTS

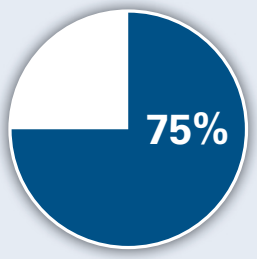


75% LOWER TOTAL COST OF OWNERSHIP




100% MAINTENANCE REDUCTION

**Assumptions:** Calculations based on overall life of the LED system. Energy cost of $.09 per kilowatt; 24 hour per day operation; labor rate of $75 each for 2 workers; average time for fixture maintenance of 1 hour.

# Custom optics

Eaton's Crouse-Hinds continuously focuses on engineering product solutions tailored to our customers' unique needs and applications.

Champ VMV LED luminaires feature custom optics designed to maximize light distribution and intensity, providing flexibility for retrofits or new installations throughout the site.



Type III optics minimize light spillover onto the walls and direct light to the ground.

## Three optical options to maximize light distribution and intensity



VMV3L - VMV11L



Type I



Type III



Type V



### TYPE I

Long and rectangular for hallways, walkways, loading docks, catwalks.

Ideal for:

- Mining conveyor belts
- Aisleways and hallways
- Catwalks and walkways
- Ramps and loading docks
- Tunnels with overhead mounts

### TYPE III

Wall mount light distribution, minimizing spillover on the wall.

Ideal for:

- Narrow crosswalks or passages with wall mounted fixtures
- Tunnels with wall mount
- Wall or stanchion mount requiring 180° forward throw beam patterns

### TYPE V

Regular circular distribution pattern for high/low bay indoor and outdoor ceiling or pendant mount lighting.

Ideal for:

- Pendant, ceiling or stanchion mount overhead building mounts
- Processing mills, industrial plants, large buildings, warehouses, etc.

**Colored LED options:**

- Available in green and amber*
- Reduction in light pollution for night space observation and sky glow due to isolating blue wavelength in red and amber colors
- Wildlife-friendly
- Improves visibility for telescopes in observatories during night sky space exploration

* Custom optics not available with colored LEDs. One model per color, see assignment sheet.

Type 403

# Case study: Type I optics

## Catwalk/conveyor lighting

Utilizing Eaton's Crouse-Hinds lighting layout services, Champ VMV luminaires with Type I optics and HID luminaires are shown installed on a catwalk to compare photometrics.

## Comparison

**Champ Type I LEDs have a wider linear pattern** than equivalent HID luminaires and provide more efficient light dispersion, which fully illuminates the catwalk.

## Results

**Champ VMV LED with Type I optics** provides superior illumination along the conveyor and walkway safely. With no gaps in illumination, the optical pattern allows for increased spacing of fixtures and a safer conveyor system.

## Savings realized

- **Champ Type I pattern allows for greater fixture spacing** along the catwalk or conveyor system
- Increased visibility with no dark spots results in safer conditions for workers
- LED system provides between 7 to 20 years of maintenance-free operation
- Up to 64% energy savings over the life of the fixture

Type 403

**Champ® Gen III w/ Type I Optics**

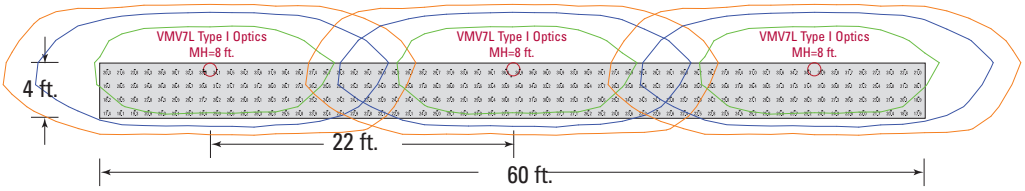


**175W Metal Halide w/ Type I Optics**

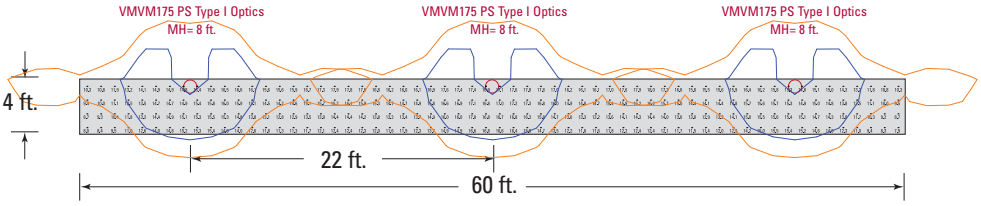


| Luminaire | Calc. Type | Units | Avg. | Max. | Min. | Avg./Min. | Max./Min. |
|---|---|---|---|---|---|---|---|
| **Champ VMV** | Illuminance | Fc | 26.91 | 36.9 | 17.4 | 1.55 | 2.12 |
| **175W MH** | Illuminance | Fc | 14.32 | 18.0 | 7.9 | 1.81 | 2.28 |

**Champ VMV has broader coverage area, higher delivered footcandles and uniformity for a typical catwalk or conveyor application.**

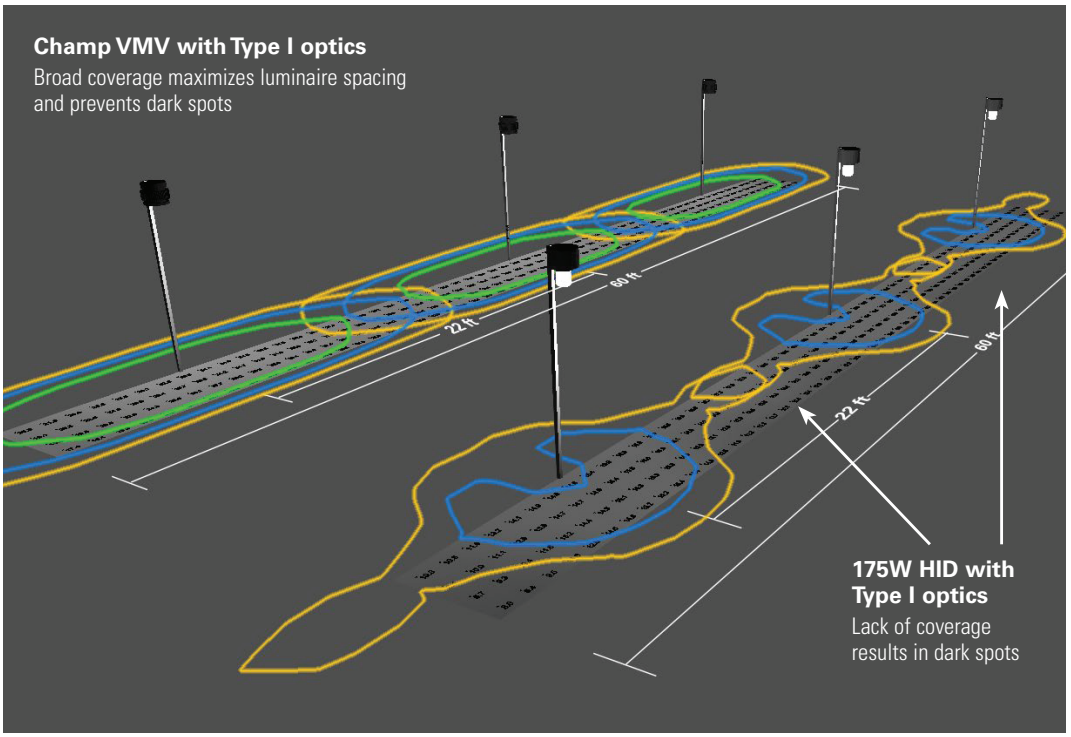


**Lighting layout & design services:**

Let us help you design your next big project!

**Contact Crouse-Hinds Customer Service**
crousecustomerctr@eaton.com
(866) 764-5454

# Champ VMV Series LED Luminaires

Champ VMV Series LEDs are designed to provide full-spectrum, crisp, white light with custom IES Type I, III and V distribution.

| Model | Typical lumens (Type V)* | Wattage | Lumens per watt | Equivalent HID luminaire | Typical energy savings / lifetime |
|---|---|---|---|---|---|
| **VMV3L** | 3,531 | 29 | 122 | 70W-100W | Up to 77% |
| **VMV5L** | 5,335 | 43 | 124 | 100W-150W | Up to 67% |
| **VMV7L** | 7,195 | 62 | 116 | 150W-175W | Up to 67% |
| **VMV9L** | 9,266 | 85 | 109 | 250W-320W | Up to 74% |
| **VMV11L** | 11,440 | 113 | 101 | 320W-400W | Up to 74% |
| **VMV13L** | 13,226 | 130 | 102 | 400W | Up to 68% |
| **VMV17L** | 18,793 | 168 | 112 | 400W-600W | Up to 72% |
| **VMV21L** | 22,110 | 196 | 113 | 600W-750W | Up to 74% |
| **VMV25L** | 26,531 | 232 | 114 | 750W-1000W | Up to 77% |

* Tolerance +/- 10%.

## Applications:

- For areas with mounting heights of 8-60 feet
- Oil and gas refineries, drilling rigs, petrochemical facilities, food and beverage facilities, platforms, loading docks, tunnels, indoor/outdoor spotlighting, outdoor wall and stanchion mounted general area lighting, and where flammable vapors, gases, ignitable dusts, fibers or flyings are present
- Locations requiring continuous and consistent light levels in extreme ambient temperatures
- Where extremely corrosive, wet, dusty, hot and/or cold conditions exist
- Classified and hazardous locations

## Champ VMV benefits:

- Instant illumination and restrike
- Cold temperature operation / no warm-up required
- Option for redundancy in drivers with multiple series circuits connected to each driver to avoid complete loss of illumination
- Easy installation - compact modular fixture attaches onto existing Champ mounting module
- Energy-efficient technology - up to 64% energy savings over HID fixtures
- Contains no mercury or other hazardous substances
- Shock- and vibration-resistant solid-state luminaires have no filaments or glass components that could break - greatly reduces the risk of premature failure
- Operating ambient: -40°C to 65°C (VMV3L-VMV11L models); -40°C to 55°C (VMV13L-VMV25L models)
- 5 year fixture warranty†

† Refer to page 2 of the D-0914 authorized distributor price book for Crouse-Hinds standard Terms and Conditions.

## LED system:

- High intensity discrete power emitters
- Standard: cool white (5000K, 70 CRI)
  Optional: warm white, (3000K, 80 CRI)
- Custom Type I, III and V optics available
- Optics clocking in field to align Type I and Type III light patterns to illumination path for VMV13L-VMV25L

## LED system lifetime rated versus economic life:

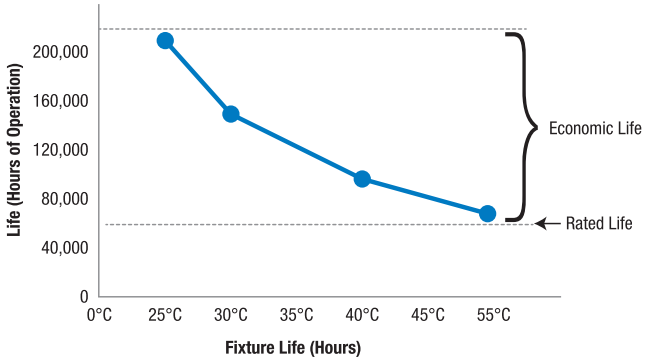


**Economic life can range anywhere between 64,000 to 200,000 hours, or 7 to 20 years of maintenance-free operation.**

**Fixture life and years of maintenance-free operation**

| Ambient temperature | Fixture life (hours) | No. of years at 24 hours usage | No. of years at 12 hours usage |
|---|---|---|---|
| 25°C | 201,008 | 23 | 46 |
| 30°C | 153,445 | 17 | 35 |
| 40°C | 94,949 | 11 | 22 |
| 55°C | 64,286 | 7 | 15 |

* 50,000 hrs of life at 65°C ambient for VMV3L-VMV11L/UNV1 models.

## Fixture life:

- Rated life of 60,000 hours @ 55°C operating ambient and 24/7 continuous operation for 365 days
- Economic life of 200,000 hours @ 25°C ambient
- L70 >300,000 hours @ 55°C

## Drivers

| Option | Voltage: VMV3L-VMV25L |
|---|---|
| /UNV1 | 120-277 VAC, 50/60 Hz; 108-250 VDC, 50/60 Hz |
| /UNV34 | 347-480 VAC, 50/60 Hz |

## Standard materials:

- Lamp housing and adapter - die cast aluminum with Corro-free™ epoxy powder coat
- Lens - heat- and impact-resistant glass
- Gaskets - silicone
- External hardware - stainless steel
- Factory-sealed, no external seals required

## Qualifications and compliances:

- DesignLights Consortium® Qualified (some models are not DLC qualified)*

Type 403

* Approved models include: VMV3L/UNV1; VMV5L/UNV1; VMV7L/UNV1; VMV9L/UNV1; VMV11L/UNV1; VMV13L/UNV1; VMV17L/UNV1; VMV21L/UNV1; VMV25L/UNV1; VMV3L/UNV34; VMV5L/UNV34; VMV7L/UNV34; VMV9L/UNV34; VMV11L/UNV34.

Refer to www.designlights.org Qualified Products List under family models for full listing details. Not all models are approved for all application categories.

## Certifications and compliances:

Type 403

### NEC and CEC

- Class I, Division 2, Groups A, B, C, D; Class I, Zone 2, nA nR; Class II, Groups E, F, G; Class III
- Zone 21 tb
- Simultaneous Presence
- Wet Locations, NEMA 4X, IP66

### UL Standards

- UL844; UL1598 Luminaires; UL1598A Marine; UL8750; UL50; UL50E

### CSA Standard

- cUL Listed to CSA Standard CSA C22.2 No. 137

### IEC**

- IEC 60079-0:2011; IEC 60079-15:2010; IEC 60079-31:2008; IEC 60598-2-1:1979; IEC 60529:2001
- Ex nA nR IIC T* Gc -40 to +40
- Ex nA nR IIC T* Gc -40 to +55
- Ex nA nR IIC T* Gc -40 to +65
- Ex tb IIIC T*°C Db -40 to +40
- Ex tb IIIC T*°C Db -40 to +55
- Ex tb IIIC T*°C Db -40 to +65

### VMV3L-VMV11L only

- IECEx UL 13.0052X

### VMV13L-VMV25L only

- IECEx UL 14.0031X

### ATEX/CE**

- EN 60079-0:2012; EN 60079-15:2010; EN 60079-31:2009; EN 60598-2-1:1989; EN 60929:1991 +A1:2001
- Ⓔx II 3 G Ex nA nR IIC T* Gc -40 to +40
- Ⓔx II 3 G Ex nA nR IIC T* Gc -40 to +55
- Ⓔx II 3 G Ex nA nR IIC T* Gc -40 to +65
- Ⓔx II 2 D Ex tb IIIC T*°C Db IP66 -40 to +40
- Ⓔx II 2 D Ex tb IIIC T*°C Db IP66 -40 to +55
- Ⓔx II 2 D Ex tb IIIC T*°C Db IP66 -40 to +65

### VMV3L-VMV11L only

- DEMKO 13 ATEX 1475031X; DEMKO 13 ATEX 1305741X

### VMV13L-VMV25L only

- DEMKO 14 ATEX 1324722X; DEMKO 14 ATEX 2274231X

* See temperature code table below.

** VMV3L-VMV11L rated to +65°C, VMV13L-VMV25L rated to +55°C.

## Electrical ratings:

| | VMV3L | VMV5L | VMV7L | VMV9L | VMV11L |
|---|---|---|---|---|---|
| **Voltage range, VAC** | 120-277 | 120-277 | 120-277 | 120-277 | 120-277 |
| **Frequency** | 50/60 Hz | 50/60 Hz | 50/60 Hz | 50/60 Hz | 50/60 Hz |
| **Input power (watts)** | 29 | 43 | 62 | 85 | 113 |
| **Input amps at 120-277 VAC** | 0.24-0.11 | 0.35-0.16 | 0.52-0.23 | 0.71-0.31 | 0.95-0.41 |
| **Voltage range, VDC** | 108-250 | 108-250 | 108-250 | 108-250 | 108-250 |
| **Power factor** | >0.90 | >0.90 | >0.90 | >0.90 | >0.90 |
| **Total harmonic distortion (THD)** | <20% | <20% | <20% | <20% | <20% |
| **Nominal lumens† (Type V)** | 3,531 | 5,335 | 7,195 | 9,266 | 11,440 |

| | VMV13L | VMV17L | VMV21L | VMV25L |
|---|---|---|---|---|
| **Voltage range, VAC** | 120-277 | 120-277 | 120-277 | 120-277 |
| **Frequency** | 50/60 Hz | 50/60 Hz | 50/60 Hz | 50/60 Hz |
| **Input power (watts)** | 131 | 168 | 196 | 232 |
| **Input amps at 120-277 VAC** | 1.08-0.48 | 1.40-0.62 | 1.64-0.73 | 1.94-0.87 |
| **Voltage range, VDC** | 108-250 | 108-250 | 108-250 | 108-250 |
| **Power factor** | >0.90 | >0.90 | >0.90 | >0.90 |
| **Total harmonic distortion (THD)** | <20% | <20% | <20% | <20% |
| **Nominal lumens† (Type V)** | 13,226 | 18,793 | 22,110 | 26,531 |

† Tolerance +/- 10%.

## Weights:

| Luminaire | lbs. | kg. |
|---|---|---|
| **VMV3L-VMV11L** | 21.8 | 8.07 |
| **VMV13L & VMV17L** | 36.0 | 16.32 |
| **VMV21L & VMV25L** | 44.0 | 19.95 |

| Mounting module | lbs. | kg. |
|---|---|---|
| **Pendant** | 1.25 | 0.57 |
| **Cone pendant** | 4.00 | 1.81 |
| **Flexible pendant** | 1.50 | 0.68 |
| **Ceiling** | 2.75 | 1.25 |
| **Wall** | 4.50 | 2.04 |
| **Angled stanchion*** | 3.50 | 1.59 |
| **Straight stanchion** | 4.50 | 2.04 |

* Angled stanchion for VMV3L-VMV11L models only.

## Temperature codes:

| Lamp/lumen output | Driver type | Ambient temperature | Class I, Div. 2 | Class II, Div. I | Simultaneous rating<br>Class I, Div. 2, Div. 1 | Class I, Zone 2<br>AEx nA nR; Ex nA nR | Class III, Div. 1<br>Class II, Div. 1, Groups E, F, G<br>Zone 21 AEx tb IIIC |
|---|---|---|---|---|---|---|---|
| **3L, 5L, 7L, 9L, 11L** | /UNV1 | 40°C | T5 | T5 | T3C | T6 | T66°C |
| **3L, 5L, 7L, 9L, 11L** | /UNV1 | 55°C | T5 | T4A | T3A | T5 | T83°C |
| **3L, 5L, 7L, 9L, 11L** | /UNV1 | 65°C | T4A | T4A | T3A | T4 | T92°C |
| **3L, 5L, 7L, 9L, 11L** | /UNV34 | 40°C | T3C | T5 | T3C | T4 | T70°C |
| **3L, 5L, 7L, 9L, 11L** | /UNV34 | 55°C | T3A | T4A | T3A | T4 | T85°C |
| **3L, 5L, 7L, 9L, 11L** | /UNV34 | 65°C | T3A | T4A | T3A | T4 | T92°C |
| **13L, 17L** | /UNV1; UNV34 | 40°C | T4A | T5 | T4A | T6 | T66°C |
| **13L, 17L** | /UNV1; UNV34 | 55°C | T4 | T4A | T4 | T5 | T81°C |
| **21L, 25L** | /UNV1; UNV34 | 40°C | T4A | T5 | T4A | T6 | T71°C |
| **21L, 25L** | /UNV1; UNV34 | 55°C | T4 | T4A | T4 | T5 | T86°C |

# Ordering information

**GUILLEVIN OTTAWA**
**PO# 2010-RON971364D**
**drawings issued 2018-06-22**

**VMV5L2A/UNV34 page 8**

**Part number example**
~~VMV17LW2AR1G/UNV1 S890~~

# VMV 17L W 2A R1 G /UNV1 S890

**Lamp/function**

| | |
|---|---|
| 3L | 3,531 lumen LED |
| 5L | 5,335 lumen LED |
| 7L | 7,195 lumen LED |
| 9L | 9,226 lumen LED |
| 11L | 11,440 lumen LED |
| 13L | 13,226 lumen LED |
| 17L | 18,793 lumen LED |
| 21L | 22,110 lumen LED |
| 25L | 26,531 lumen LED |
| GL* | Green (4,300 lumen LED) |
| AL* | Amber (5,000 lumen LED) |

* Custom optics not available with colored LEDs.

**Color temperature**

| | |
|---|---|
| BLANK | Cool (5000K), colored |
| W | Warm (3000K) |

**Mounting style**

| | |
|---|---|
| BLANK | No Cover |
| J* | 1-½" stanchion, 25° angled |
| P | 1-½" stanchion, straight |
| 2A | ¾" pendant |
| 3A | 1" pendant |
| 20A | 20mm pendant |
| 25A | 25mm pendant |
| 2B | ¾" cone pendant |
| 3B | 1" cone pendant |
| 2C | ¾" ceiling |
| 3C | 1" ceiling |
| 20C | 20mm ceiling |
| 25C | 25mm ceiling |
| 2HA | ¾" flexible pendant |
| 2TW | ¾" wall |
| 3TW | 1" wall |
| 20TW | 20mm wall |
| 25TW | 25mm wall |

* For VMV3L-VMV11L only.

**Suffixes**

| | |
|---|---|
| S812* | Trunnion mount kit with pin |
| S831** | Safety cable |
| S890 | Quick clip |
| S891** | Diffused lens |
| S892*** | Redundant driver |
| S896** | Teflon coated lens |
| S903 | Polycarbonate lens |
| TB6 | Six-pole terminal block |

* Order with ceiling mount only.
** Not available for IEC.
*** Available for 5L & 7L only. Redundant driver standard on 9L - 25L models.
7L = 6,616 lumens with S892 suffix.

**Voltage**

| | |
|---|---|
| /UNV1 | 120-277 VAC, 50/60 Hz; 108-250 VDC, 50/60 Hz |
| /UNV34 | 347-480 VAC, 50/60 Hz |

**Guard**

| | |
|---|---|
| BLANK | No guard |
| G | P3001 wire guard |

**Optics**

| | |
|---|---|
| BLANK | Type V optic standard *(all mounts)* |
| R1 | Type I optic *(all mounts minus ceiling for 3L-11L, available with mounts for 13L-25L models)* |
| R1A* | Type I optic *(ceiling with conduit 45° counterclockwise or 135° clockwise from hinge)* |
| R1B* | Type I optic *(ceiling with conduit 45° clockwise or 135° counterclockwise from hinge)* |
| R3 | Type III optic *(all mounts minus ceiling)* |
| R3AP* | Type III optic *(select when using Appleton® top hat adapter with Champ fixture)* |
| R3A1* | Type III optic *(ceiling with conduit 45° counterclockwise from top hat hinge)* |
| R3A2* | Type III optic *(ceiling with conduit 135° clockwise from top hat hinge)* |
| R3B1* | Type III optic *(ceiling with conduit 45° clockwise from top hat hinge)* |
| R3B2* | Type III optic *(ceiling with conduit 135° counterclockwise from top hat hinge)* |

*For VMV3L-VMV11L only.

Type 403

STANTEC PROJECT #: 110126045

SUBMITTAL # ELE-004 Lighting

This review by Stantec is for general conformance with the design concept of Stantec's design of the:
☐ Architectural ☐ Structural ☐ Mechanical ☑ Electrical ☐ Other

component(s) only and does not mean that Stantec has verified or approves the shop drawing(s). The Contractor remains solely responsible for the shop drawing(s) and this review by Stantec does not relieve the Contractor of the Contractor's responsibility for errors or omissions in the shop drawing(s) or for meeting all requirements of the contract documents. This review does not mean that Stantec approves the detailed design inherent in the shop drawing, responsibility for which shall remain with the Contractor submitting same, nor does this review mean that Stantec accepts any deviation of the shop drawing(s) from the contract documents. The Contractor is responsible for confirming all dimensions and correlating them at the job site, for all construction means, methods and techniques, and for coordination of construction work of all trades, including coordination of all shop drawings.

Stantec

☑ REVIEWED
☐ REVIEWED, AS NOTED
☐ REVISE AND RESUBMIT
☐ NOT REVIEWED

DATE June 26, 2018

BY Chester Martinez, E.I.T.

**Accessories (ordered separately)**

| | |
|---|---|
| D2S20 | Photocell, 120V, 50/60 Hz |
| D2S208 277 | Photocell, 208-277V |
| VMVL S812 K1* | Trunnion mount kit with pin |

* Order with ceiling mount only.

# Mounting options and dimensions

### Stanchion - 25° Angled

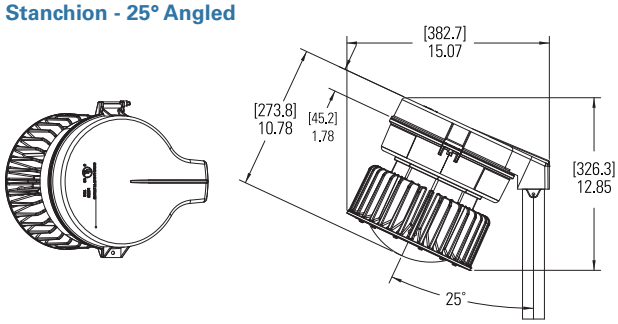


### Stanchion - Straight

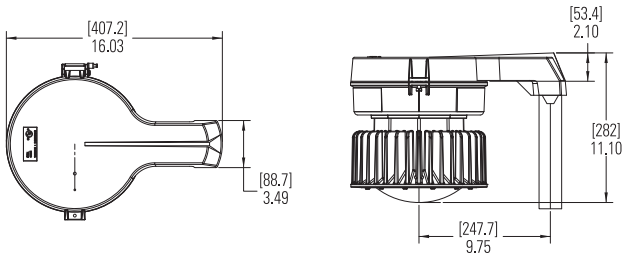


### Pendant

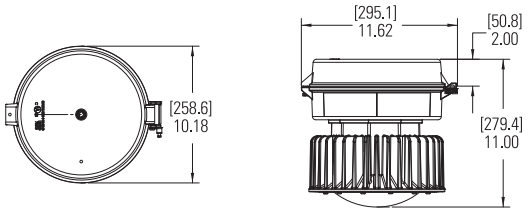


### Ceiling

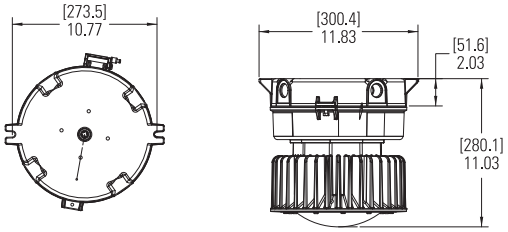


### Wall

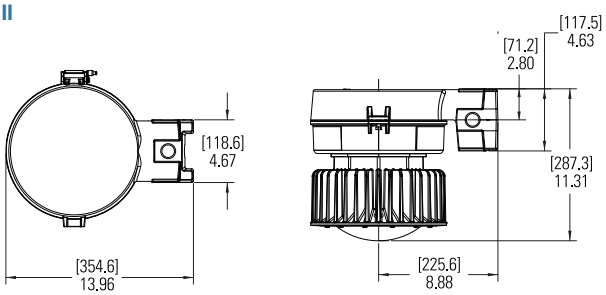


### Cone Pendant

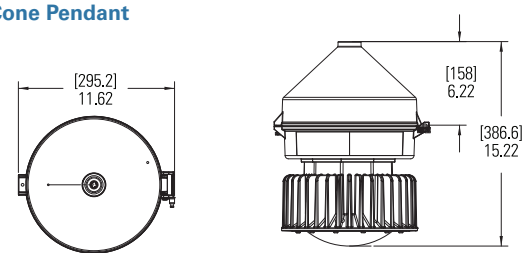


### Trunnion

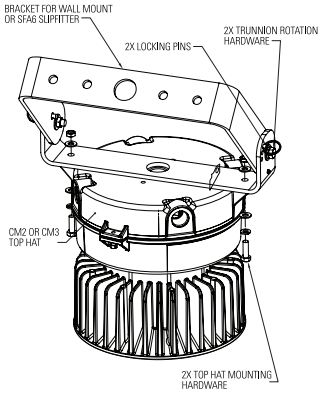


Type 403

# Photometric comparison at 15 ft. mounting height

Type 403

175W PSMH - Type I

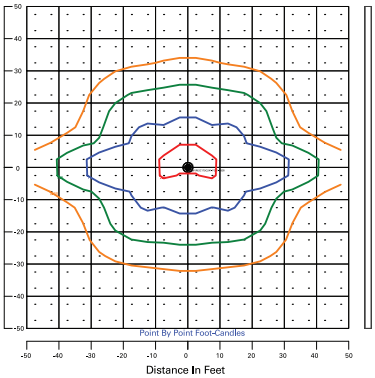


VMV7L - Type I

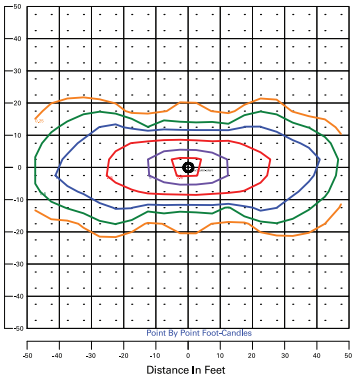


### Type I optical pattern




**Calculation summary**

| Label | Calc. type (in Fc) | Avg. | Max. | Min. |
|---|---|---|---|---|
| VMV 175W MH Grid | Illuminance | 0.45 | 2.8 | 0.0 |
| VMV LED Grid | Illuminance | 0.62 | 8.0 | 0.0 |

175W PSMH - Type III

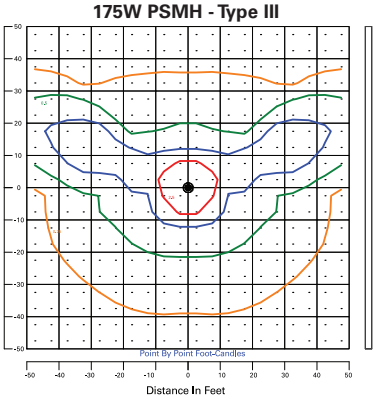


VMV7L - Type III

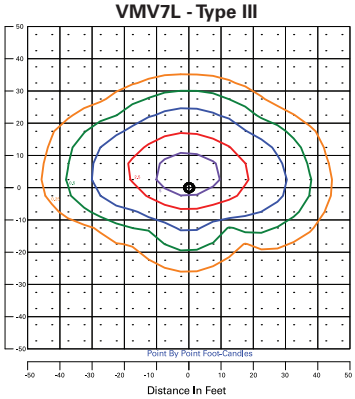


### Type III optical pattern




**Calculation summary**

| Label | Calc. type (in Fc) | Avg. | Max. | Min. |
|---|---|---|---|---|
| VMV 175W MH Grid | Illuminance | 0.53 | 3.2 | 0.1 |
| VMV LED Grid | Illuminance | 0.61 | 7.5 | 0.0 |

175W PSMH - Type V

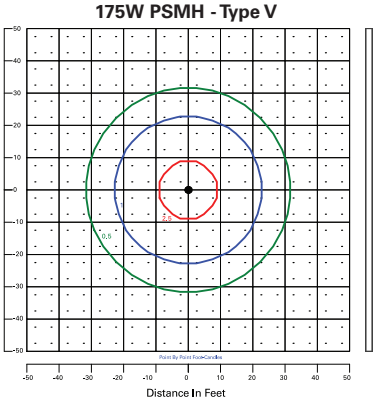


VMV7L - Type V

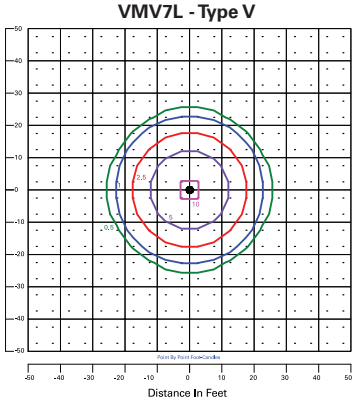


### Type V optical pattern




**Calculation summary**

| Label | Calc. type (in Fc) | Avg. | Max. | Min. |
|---|---|---|---|---|
| VMV 175W MH Grid | Illuminance | 0.51 | 2.8 | 0.1 |
| VMV LED Grid | Illuminance | 0.69 | 10.1 | 0.0 |

**Higher average footcandles, uniformity and distribution coverage with less than half the lumens and energy consumption compared to 175W metal halide**

| Actual lumens (nominal†) | VMV3L | VMV5L | VMV7L | VMV9L | VMV11L |
|---|---|---|---|---|---|
| Type I | 3,360 | 5,045 | 6,844 | 8,823 | 10,730 |
| Type III | 3,309 | 4,468 | 6,741 | 8,618 | 10,660 |
| Type V | 3,531 | 5,335 | 7,195 | 9,266 | 11,440 |

| Actual lumens (nominal†) | VMV13L | VMV17L | VMV21L | VMV25L |
|---|---|---|---|---|
| Type I | 12,842 | 18,194 | 21,404 | 25,685 |
| Type III | 12,493 | 17,699 | 20,822 | 24,987 |
| Type V | 13,266 | 18,793 | 22,110 | 26,531 |

† Tolerance +/- 10%.

# Type 403


**U.S. (global headquarters): Eaton's Crouse-Hinds business**

1201 Wolf Street
Syracuse, NY 13208

(866) 764-5454
FAX: (315) 477-5179
FAX Orders Only:
(866) 653-0640

crousecustomerctr@eaton.com

**Canada**

Toll Free: 800-265-0502
FAX: (800) 263-9504
FAX Orders only: (866) 653-0645

**Middle East (Dubai)**

971 4 8066100
FAX: 971 4 8894813

chmesales@eaton.com

**Korea**

82-2-3484-6783
82-2-3484-6778

CCHK-sales@
cooperindustries.com

**Mexico/Latin America/Caribbean**

52-555-804-4000
FAX: 52-555-804-4020

ventascentromex@eaton.com

**Singapore**

65-6645-9888
FAX: 65-6297-4819

chsi-sales@
cooperindustries.com

**Australia**

61-2-8787-2777
FAX: 61-2-9609-2342

CEASales@
cooperindustries.com

**Europe (Germany)**

49 (0) 6271 806-500
49 (0) 6271 806-476

sales.CCH.de@
cooperindustries.com

**China**

86-21-2899-3600
FAX: 86-21-2899-4055

cchsales@
cooperindustries.com

**India**

91-124-4683888
FAX: 91-124-4683899

cchindia@
cooperindustries.com


**For more information:**

If further assistance is required, please contact an authorized Eaton Distributor, Sales Office, or Customer Service Department.


**Eaton**
1000 Eaton Boulevard
Cleveland, OH 44122
United States
Eaton.com



© 2018 Eaton
All Rights Reserved


Printed in USA
Publication No. 5123-0318
March 2018



Eaton is a registered trademark.

All other trademarks are property of their respective owners.


Powering Business Worldwide

# LED WIDE ENCLOSED & GASKETED - EGW

Type 406



## PRODUCT HIGHLIGHTS

- Vaportight design
- IP66, IP67 Certified (comparable to NEMA 6)
- NEMA 4X rated / NEMA 250-2003
- High pressure hose down (1500psi)
- NSF / ANSI Standard 2
- UL50E: standards for safety enclosures of electrical equipment
- 12 Point stainless steel latching and stainless hardware
- Sloped housing design promotes water displacement
- Optional stainless steel "V" bracket or "SB" surface bracket accessory
- RoHS Compliant

**EXPECTED LIFE -** Projected life of at least 60,000 hours. Contact factory for TM-21 detail.

**LEDs -** Use of closely-spaced medium-power, high-brightness chips minimizes pixelation and provides uniform lens luminance. Available in Cool White (5000K), Neutral White (4000K) and Warm White (3500K) color temperatures. CRI >= 80 (CW > 70). LM-80 reports available.

**LENS -** Frosted, injection molded, high impact acrylic is standard. An optional clear lens is also available.

**HOUSING -** The inner gear tray is constructed of code gauge steel. The outer housing is constructed of fiberglass reinforced polyester. Gasketing in the housing is constructed of closed cell polyurethane. Conduit entrance is provided at one end. All external hardware and hanging components are constructed of stainless steel.

**ELECTRICAL -** Universal voltage (120-277 Vac) input, 50/60Hz. Power factor > 0.9, THD < 20%, in-rush current < 15 Amps.

**DRIVER -** High-performance isolated driver features over-voltage, over-current and short-circuit (with auto-recovery) protection. Driver module is sealed to IP66 protection levels, with a Class A sound rating. 0-10 volt dimming standard.

**OPERATING TEMPERATURE -** -30°C to 45°C (-22°F to 113°F).

**FINISH -** All metal parts are painted after fabrication following treatment with phosphate rust inhibitor. Finish coating of housing reflecting surfaces is with high-reflectance (minimum 92%) polyester powder.

**WARRANTY -** Limited 5-year warranty

**PHOTOMETRICS -** Please visit our website at www.lsi-industries.com for detailed photometric data.

**LISTING -** Listed to UL 1598 and UL 8750

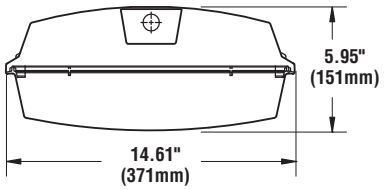


**LIGHT OUTPUT - LED EGW**

| | Lumens (Nominal) | | | |
|---|---|---|---|---|
| | WW | NW | CW | Watts |
| HO | 5930 | 5840 | 6540 | 57 |
| VHO | 9425 | 9590 | 11455 | 88 |
| XHO | 18972 | 20765 | 22005 | 164 |

LED Chips are frequently updated therefore values may increase.

**This product, or selected versions of this product, meet the standards listed below. Please consult factory for your specific requirements.**

MANUFACTURED IN USA

ARRA Funding Compliant

c UL us LISTED wet location

STANTEC PROJECT #: 110126045 SUBMITTAL # ELE-004 Lighting

This review by Stantec is for general conformance with the design concept of Stantec's design of the:

☐ Architectural ☐ Structural ☐ Mechanical ☑ Electrical ☐ Other

component(s) only and does not mean that Stantec has verified or approves the shop drawing(s). The Contractor remains solely responsible for the shop drawing(s) and this review by Stantec does not relieve the Contractor of the Contractor's responsibility for all requirements of the contract documents. This review does not mean that Stantec approves the detailed design inherent in the shop drawing, responsibility for which shall remain with the Contractor submitting same, nor does this review mean that Stantec accepts any deviation of the shop drawing(s) from the contract documents. The Contractor is responsible for confirming all dimensions and correlating them at the job site, for all coordination of construction work of all trades, including those affected by shop drawings.

Stantec

☑ REVIEWED
☐ REVIEWED, AS NOTED
☐ REVISE AND RESUBMIT
☐ NOT REVIEWED

DATE June 26, 2018

BY Chester Martinez, E.I.T.

## ORDERING INFORMATION

TYPICAL ORDER EXAMPLE: **EGW 4 S LED HO CW UE**

| Prefix | Length | Distribution | Light Source | Drive Current | Color Temperature | Line Voltage | Options |
|---|---|---|---|---|---|---|---|
| EGW - LED Wide Enclosed & Gasketed | 4 | S - Symmetric | LED | HO - High Output<br>VHO - Very High Output<br>XHO - Extreme High Output | CW - Cool White (5000K)<br>NW - Neutral White (4000K)<br>WW - Warm White (3500K) | UE - Universal Voltage (120-277V)<br>347 - 347V | CL - Clear Lens<br>W6C163[1] - 6-foot, 16 gauge, 3 conductor cord with Wet Location fitting<br>W6C164[1] - 6-foot, 16 gauge, 4 conductor cord with Wet Location fitting<br>W6C165[1] - 6-foot, 16 gauge, 5 conductor cord with Wet Location fitting<br>HUB - 3/4" N.P.T. HUB IN BACK / TOP (Damp Location Rated Only)<br>LT - Lens Safety Teather<br>EM - 1100 Lumen Emergency Battery Pack<br>SD50 - Step Dimming to 50% |

**ACCESSORY ORDERING INFORMATION**

| Description | Order Number |
|---|---|
| Stainless Suspension Hangers ("V" Hook) (Pair) | EGWVB |
| Cable Hanging Set with Loop 10 ft. (pair) | LCH10 |
| Cable Hanging Set with Loop 20 ft. (pair) | LCH20 |
| Stainless Steel Surface Bracket | EGWSB |

1- Specific voltage must be specified. Cord feed entrance available on housing end only.

**Project Name** Water treatment plant **Fixture Type** 406

**Catalog #** EGW 4 S LED HO CW 347V

© 2016
LSI INDUSTRIES INC.

**Date: Jul 3, 2018**

REVIEWED BY CONTRACTOR
Kudlik Construction Ltd.
NAME: Sandra Rousseau P.Eng
DATE: Jul 03, 2018

# Transmittal

**Arctic Electrical Nunavut Ltd**
PO Box 1381
Iqaluit, Nu.
X0A 0H0
Phone: 867-975-3494
**From: Lee Pitcher**



**Project** **Waste Wate Treatment Plant**
**Location** Iqaluit NU
**To** Kudlik Construction
Contact: Sandra Rousseau P.Eng.
srousseau@kudlik.biz

SE-05
PO-AEN Stock

Attached are the following items:

- [x] Drawings
- [ ] Prints
- [ ] Plans
- [x] Specifications
- [ ] Information
- [ ] Submittals

Other:

THESE ARE TRANSMITTED FOR:

- [ ] Prior Approval
- [X] Approval
- [ ] Approval as Submitted
- [ ] Approval as Noted
- [ ] Resubmittal for Approval
- [ ] Corrections
- [ ] Your Use
- [ ] Review and Comment
- [ ] Record

Bids due on:
Other:

| Qty | Type | MFG | Part |
|---|---|---|---|

Section 07 84 00 Firestopping

STANTEC PROJECT #: 110126045
SUBMITTAL # ELE-05
This review by Stantec is for general conformance with the design concept of Stantec's design of the:
☐ Architectural ☐ Structural ☐ Mechanical ☑ Electrical ☐ Other
component(s) only and does not mean that Stantec has verified or approves the shop drawing(s). The Contractor remains solely responsible for the shop drawing(s) and this review by Stantec does not relieve the Contractor of the Contractor's responsibility for errors or omissions in the shop drawing(s) or for meeting all requirements of the contract documents. This review does not mean that Stantec approves the detailed design inherent in the shop drawing, responsibility for which shall remain with the Contractor submitting same, nor does this review mean that Stantec accepts any deviation of the shop drawing(s) from the contract documents. The Contractor is responsible for confirming all dimensions and correlating them at the job site, for all construction means, methods and techniques, and for coordination of construction work of all trades, including coordination of all shop drawings.

Stantec
☑ REVIEWED
☐ REVIEWED, AS NOTED
☐ REVISE AND RESUBMIT
☐ NOT REVIEWED
DATE 2018-07-04
BY Konrad Goluch

STANTEC PROJECT #: 110126045
SUBMITTAL # ELE-45
This review by Stantec is for general conformance with the design concept of Stantec's design of the:
☑ Architectural ☐ Structural ☐ Mechanical ☐ Electrical ☐ Other
component(s) only and does not mean that Stantec has verified or approves the shop drawing(s). The Contractor remains solely responsible for the shop drawing(s) and this review by Stantec does not relieve the Contractor of the Contractor's responsibility for errors or omissions in the shop drawing(s) or for meeting all requirements of the contract documents. This review does not mean that Stantec approves the detailed design inherent in the shop drawing, responsibility for which shall remain with the Contractor submitting same, nor does this review mean that Stantec accepts any deviation of the shop drawing(s) from the contract documents. The Contractor is responsible for confirming all dimensions and correlating them at the job site, for all construction means, methods and techniques, and for coordination of construction work of all trades, including coordination of all shop drawings.

Stantec
☑ REVIEWED
☐ REVIEWED, AS NOTED
☐ REVISE AND RESUBMIT
☐ NOT REVIEWED
DATE 2018-07-04
BY Jason King

**Notes:**
Please review the attached approval drawings carefully. Production cannot be scheduled until a signed copy of the final approved drawing are received. Be aware that once drawings are approved, any errors due to incorrect information are the responsibility of the client.

Do not hesitate to contact me if you have any questions or concerns.

# High performance intumescent firestop sealant FS-ONE MAX

## Product description

- Intumescent (expands when exposed to fire) firestop sealant that helps protect combustible and non-combustible penetrations for up to 4 hours fire rating

## Applications

- Effectively seals most common through penetrations in a variety of base materials
- For use on concrete, masonry and drywall
- Mixed and multiple penetrations
- Metal pipe penetrations
- Insulated metal pipe penetrations
- Plastic pipe penetrations
- Cable bundles and trays
- HVAC penetrations

## Advantages

- One product for a variety of common through penetrations
- Cost-effective and easy-to-use solution
- Water-based and paintable
- W-rated systems available
- Ethylene glycol-free
- Industry leading VOC results
- Convenient multi application firestop solution for penetrations

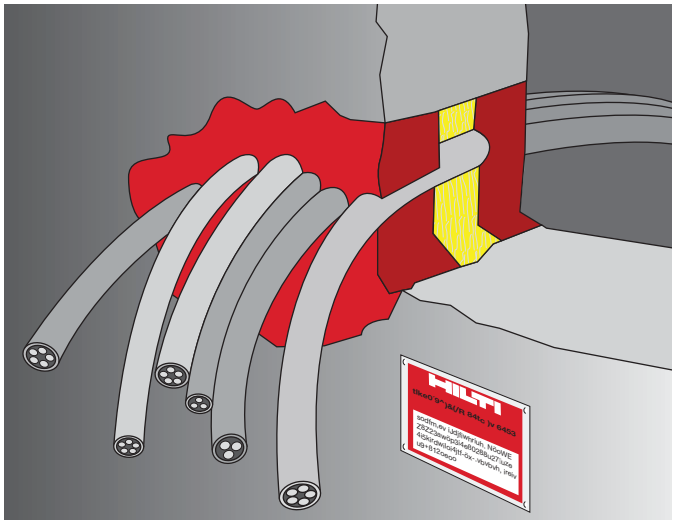

| Technical Data* | |
|---|---|
| **Chemical basis** | Water-based acrylic dispersion |
| **Color** | Red |
| **Application temperature** | 41°F to 104°F |
| **Storage and transportation range** | 41°F to 77°F |
| **Approx. cure time *** | 4 mm / 3 days |
| **Shelf life** | 12 months ** |
| **Temperature resistance range** | -4°F to 212°F |
| **Mold and mildew performance** | Class 0 (ASTM G21-13) |
| **Mold and mildew resistant** | Yes |
| **Surface burning characteristics (ASTM E 84-14)** | Flame Spread: 0<br>Smoke Development: 10 |
| **Approvals** | California State Fire Marshal - in progress |
| **Tested in accordance with** | ASTM G21<br>ASTM E 90<br>CAN/ULC-S115<br>UL 1479<br>ASTM E 814<br>ASTM E84 |

* At 75°F (24°C) and 50% relative humidity
** from date of manufacture

CLASSIFIED C UL US
FILL, VOID OR CAVITY MATERIAL
FOR USE IN THROUGH-PENETRATION
FIRESTOP SYSTEMS
SEE UL FIRE RESISTANCE DIRECTORY
66Y7

FM APPROVED

FBC SYSTEM COMPATIBLE
Visit fbcsystemcompatible.com.
FBC™ is a trademark of the Lubrizol Corporation.



W rated

01/15 DBS

# Material Safety Data Sheet
acc. to ISO 11014

Printing date 09/18/2014 Version number 1 Reviewed on 09/18/2014

* 
## 1 Identification

· **Product identifier**

· **Trade name: FS-ONE MAX**
· **Relevant identified uses of the substance or mixture and uses advised against** No further relevant information available.
· **Application of the substance / the mixture** Construction chemicals

· **Details of the supplier of the safety data sheet**
· **Manufacturer/Supplier:**
Hilti (Canada) Corp.
2360 Meadowpine Boulevard
Mississauga, Ontario L5N 6S2
Phone: (800) 363-4458
Fax: (800) 363-4459

· **Information department:**
chemicals.hse@hilti.com
see section 16
· **Emergency telephone number:**
Chem-Trec
Tel.: 1 800 424 9300
Hilti (Canada) Corp.
Phone: (800) 363-4458
Fax: (800) 363-4459

* 
## 2 Hazard(s) identification

· **Classification of the substance or mixture** The product is not classified according to the Globally Harmonized System (GHS).

· **Label elements**
· **GHS label elements** Void
· **Hazard pictograms** Void
· **Signal word** Void
· **Hazard statements** Void
· **Hazard description:**
· **WHMIS classification** -
· **Other hazards**
· **Results of PBT and vPvB assessment**
· **PBT:** Not applicable.
· **vPvB:** Not applicable.

* 
## 3 Composition/information on ingredients

· **Chemical characterization: Mixtures**
· **Description:** .

· **Dangerous components:** Void
· **Additional information** For the wording of the listed risk phrases refer to section 16.

## 4 First-aid measures

· **Description of first aid measures**
· **General information** No special measures required.
· **After inhalation** Take affected persons into fresh air and keep quiet.
· **After skin contact** Immediately wash with water and soap and rinse thoroughly.
· **After eye contact** Rinse opened eye for several minutes under running water. Then consult a doctor.
· **After swallowing** Seek immediate medical advice.
· **Most important symptoms and effects, both acute and delayed** No further relevant information available.
· **Indication of any immediate medical attention and special treatment needed** No further relevant information available.

## 5 Fire-fighting measures

· **Extinguishing media**
· **Suitable extinguishing agents** CO2, extinguishing powder or water spray. Fight larger fires with water spray or alcohol resistant foam.
· **Special hazards arising from the substance or mixture**
In case of fire, the following can be released:
Carbon monoxide (CO)
Carbondioxide (CO2)
· **Advice for firefighters**
· **Protective equipment:** Ensure adequate ventilation

## 6 Accidental release measures

· **Personal precautions, protective equipment and emergency procedures**
Ensure adequate ventilation
Wear protective clothing.

(Contd. on page 2)

# Material Safety Data Sheet
acc. to ISO 11014

Printing date 09/18/2014 | Version number 1 | Reviewed on 09/18/2014

**Trade name: FS-ONE MAX**

(Contd. of page 1)

Particular danger of slipping on leaked/spilled product.
· **Environmental precautions:** Do not allow product to reach sewage system or any water course.
· **Methods and material for containment and cleaning up:**
Pick up mechanically.
Dispose contaminated material as waste according to item 13.
· **Reference to other sections**
See Section 7 for information on safe handling
See Section 8 for information on personal protection equipment.
See Section 13 for disposal information.

* 
## 7 Handling and storage

· **Precautions for safe handling** No special measures required.
· **Information about protection against explosions and fires:** No special measures required.

· **Conditions for safe storage, including any incompatibilities**
· **Storage**
· **Requirements to be met by storerooms and receptacles:** keep containers securely closed and dry, store at 5 - 25 °C / 41 - 77 °F
· **Information about storage in one common storage facility:** Not required.
· **Further information about storage conditions:** None.

· **Storage class** 10
· **Specific end use(s)** No further relevant information available.

* 
## 8 Exposure controls/personal protection

· **Control parameters**
· **Components with limit values that require monitoring at the workplace:**
The product does not contain any relevant quantities of materials with critical values that have to be monitored at the workplace.
· **Additional information:** The lists that were valid during the creation were used as basis.

· **Exposure controls**
· **Personal protective equipment**
· **General protective and hygienic measures**
The usual precautionary measures for handling chemicals should be followed.
Avoid contact with the eyes and skin.
Keep away from foodstuffs, beverages and feed.
Wash hands before breaks and at the end of work.
· **Breathing equipment:** Not necessary if room is well-ventilated.
· **Protection of hands:**



Protective gloves.

The glove material has to be impermeable and resistant to the product/ the substance/ the preparation.
Selection of the glove material on consideration of the penetration times, rates of diffusion and the degradation
EN 374
· **Material of gloves**
Synthetic gloves
The selection of the suitable gloves does not only depend on the material, but also on further marks of quality and varies from manufacturer to manufacturer. As the product is a preparation of several substances, the resistance of the glove material can not be calculated in advance and has therefore to be checked prior to the application.
· **Penetration time of glove material**
The exact break through time has to be found out by the manufacturer of the protective gloves and has to be observed.
· **For the permanent contact gloves made of the following materials are suitable:** Nitrile rubber, NBR
· **Eye protection:**



Tightly sealed goggles.

EN 166 + EN 170
· **Body protection:**



Protective work clothing.



(Contd. on page 3)

HILTI

# Material Safety Data Sheet
acc. to ISO 11014

Printing date 09/18/2014 | Version number 1 | Reviewed on 09/18/2014

**Trade name: FS-ONE MAX**

(Contd. of page 2)

* 
## 9 Physical and chemical properties

| | |
|---|---|
| · **Information on basic physical and chemical properties** | |
| · **General Information** | |
| · **Appearance:** | |
| **Form:** | Pasty |
| **Color:** | Red |
| · **Odor:** | Characteristic |
| · **Odour threshold:** | Not determined. |
| · **pH-value:** | Not determined. |
| · **Change in condition** | |
| **Melting point/Melting range:** | Not determined. |
| **Boiling point/Boiling range:** | 100 °C (212 °F) |
| · **Flash point:** | Not applicable |
| · **Flammability (solid, gaseous)** | Not applicable. |
| · **Ignition temperature:** | |
| **Decomposition temperature:** | Not determined. |
| · **Auto igniting:** | Product is not selfigniting. |
| · **Danger of explosion:** | Product does not present an explosion hazard. |
| · **Explosion limits:** | |
| **Lower:** | Not determined. |
| **Upper:** | Not determined. |
| · **Vapor pressure at 20 °C (68 °F):** | 23 hPa (17 mm Hg) |
| · **Density:** | Not determined |
| · **Relative density** | Not determined. |
| · **Vapour density** | Not determined. |
| | Not applicable. |
| · **Evaporation rate** | Not determined. |
| · **Solubility in / Miscibility with** | |
| **Water:** | Not miscible or difficult to mix |
| · **Partition coefficient (n-octanol/water):** | Not determined. |
| · **Viscosity:** | |
| **dynamic:** | Not determined. |
| **kinematic:** | Not determined. |
| · **Solvent content:** | |
| **Organic solvents:** | 1.0 % |
| **Water:** | 18.5 % |
| · **Other information** | No further relevant information available. |

## 10 Stability and reactivity

· **Reactivity**
· **Chemical stability**
· **Thermal decomposition / conditions to be avoided:** No decomposition if used according to specifications.
· **Possibility of hazardous reactions** No dangerous reactions known
· **Conditions to avoid** No further relevant information available.
· **Incompatible materials:** No further relevant information available.
· **Hazardous decomposition products:** No dangerous decomposition products known

* 
## 11 Toxicological information

· **Information on toxicological effects**
· **Acute toxicity:**
· **Primary irritant effect:**
· **on the skin:** No irritant effect.
· **on the eye:** No irritating effect.
· **Sensitization:** No sensitizing effects known.
· **Additional toxicological information:**
When used and handled according to specifications, the product does not have any harmful effects according to our experience and the information provided to us.

· **Carcinogenic categories**

| · **IARC (International Agency for Research on Cancer)** |
|---|
| None of the ingredients is listed. |

| · **NTP (National Toxicology Program)** |
|---|
| None of the ingredients is listed. |

(Contd. on page 4)

# Material Safety Data Sheet
acc. to ISO 11014

Printing date 09/18/2014 | Version number 1 | Reviewed on 09/18/2014

**Trade name: FS-ONE MAX**

(Contd. of page 3)

· **OSHA-Ca (Occupational Safety & Health Administration)**
None of the ingredients is listed.

## 12 Ecological information

· **Toxicity**
· **Aquatic toxicity:** No further relevant information available.
· **Persistence and degradability** No further relevant information available.
· **Bioaccumulative potential** No further relevant information available.
· **Mobility in soil** No further relevant information available.
· **Results of PBT and vPvB assessment**
· **PBT:** Not applicable.
· **vPvB:** Not applicable.
· **Other adverse effects** No further relevant information available.

## 13 Disposal considerations

· **Waste treatment methods**
· **Recommendation** Must not be disposed of together with household garbage. Do not allow product to reach sewage system.
· **European waste catalogue:**
08 00 00
08 04 00
08 04 10

· **Uncleaned packagings:**
· **Recommendation:** Dispose of packaging according to regulations on the disposal of packagings.

## 14 Transport information

| | |
|---|---|
| · **UN-Number**<br>· **DOT, TDG, ADN, IMDG, IATA** | Void |
| · **UN proper shipping name**<br>· **DOT, TDG, ADN, IMDG, IATA** | Void |
| · **Transport hazard class(es)**<br>· **DOT, TDG, ADN, IMDG, IATA**<br>· **Class** | Void |
| · **Packing group**<br>· **DOT, TDG, IMDG, IATA** | Void |
| · **Environmental hazards:**<br>· **Marine pollutant:** | No |
| · **Special precautions for user** | Not applicable. |
| · **Transport in bulk according to Annex II of MARPOL73/78 and the IBC Code** | Not applicable. |
| · **UN "Model Regulation":** | - |

*

## 15 Regulatory information

· **Safety, health and environmental regulations/legislation specific for the substance or mixture**
· **Sara**

· **Section 313 (Specific toxic chemical listings):**
None of the ingredients are listed.

· **TSCA (Toxic Substances Control Act):**
All ingredients are listed.

· **Proposition 65:**

· **Chemicals known to cause cancer:**
None of the ingredients are listed.

· **Cancerogenity categories**

· **EPA (Environmental Protection Agency)**
None of the ingredients is listed.

· **TLV (Threshold Limit Value established by ACGIH)**
None of the ingredients is listed.

· **MAK (German Maximum Workplace Concentration)**
None of the ingredients is listed.

(Contd. on page 5)

# Material Safety Data Sheet
acc. to ISO 11014



**Trade name: FS-ONE MAX**

(Contd. of page 4)

· **NIOSH-Ca (National Institute for Occupational Safety and Health)**
None of the ingredients is listed.

· **National regulations**

· **Information about limitation of use:** Employment restrictions concerning young persons must be observed.
· **Chemical safety assessment:** not required.

## 16 Other information

This information is based on our present knowledge. However, this shall not constitute a guarantee for any specific product features and shall not establish a legally valid contractual relationship.

· **Department issuing MSDS:**
Hilti Corporation
Business Unit Chemicals
Quality/Safety/Environment
FL-9494 Schaan / Liechtenstein

chemicals.hse@hilti.com
Tel.: +423 234 3004
FAX.: +423 234 3462
· **Date of preparation / last revision** 09/18/2014 / -
· **Abbreviations and acronyms:**
IMDG: International Maritime Code for Dangerous Goods
DOT: US Department of Transportation
IATA: International Air Transport Association
ACGIH: American Conference of Governmental Industrial Hygienists
EINECS: European Inventory of Existing Commercial Chemical Substances
ELINCS: European List of Notified Chemical Substances
CAS: Chemical Abstracts Service (division of the American Chemical Society)
WHMIS: Workplace Hazardous Materials Information System (Canada)
· *** Data compared to the previous version altered.**

# CERTIFICATE OF COMPLIANCE

| | |
|---|---|
| **Certificate Number** | 20150108-R13240 |
| **Report Reference** | R13240 |
| **Issue Date** | 2015-January-08 |

**Issued to:** Hilti Construction Chemicals, Div of Hilti Inc.
5400 S 122nd East Ave
Tulsa, OK 74146

**This is to certify that representative samples of** Fill, Void or Cavity Materials
Fill, Void or Cavity Materials Certified for Canada
FS-ONE MAX Intumescent Sealant for use in Through-Penetration Firestop and Joint Systems in the UL Fire Resistance Directory and in the Products Certified for Canada Directory.

Have been investigated by UL in accordance with the Standard(s) indicated on this Certificate.

**Standard(s) for Safety:** ANSI/UL 1479, "Fire Tests of Through-Penetration Firestops," – Edition 4
ANSI/UL 2079, "Tests for Fire Resistance of Building Joint Systems," – Edition 4 – Revision Date 2014/12/17
CAN/ULC-S115, "Standard Method of Fire Tests of Firestop Systems." – Edition 4 – Issue Date 2011/06/01

**Additional Information:** See the UL Online Certifications Directory at www.ul.com/database for additional information

Only those products bearing the UL Classification Mark should be considered as being covered by UL's Classification and Follow-Up Service.

The UL Classification Mark includes: UL in a circle: with the word "CLASSIFIED" (as shown); a control number (may be alphanumeric) assigned by UL; a statement to indicate the extent of UL's evaluation of the product; and the product category name (product identity) as indicated in the appropriate UL Directory.

Look for the UL Classification Mark on the product.

William R. Carney, Director, North American Certification Programs

UL LLC

Any information and documentation involving UL Mark services are provided on behalf of UL LLC (UL) or any authorized licensee of UL. For questions, please contact a local UL Customer Service Representative at www.ul.com/contactus

January 30, 2015

To Whom It May Concern:

Re: Hilti FS-ONE MAX Firestop – LEED Info

The Hilti FS-ONE MAX Firestop is manufactured in Germany.

There is no post-consumer or post-industrial content in FS-ONE MAX and it cannot be recycled. The VOC content for FS-ONE MAX is 9 grams/liter.

FS-ONE MAX is not regulated as a hazardous waste by the Canadian EPA Standards. The regulations for the disposal of non-regulated industrial waste can vary from province to province and even city to city. For this reason, you should consult your local and provincial regulatory agencies for direction on disposal.

Please feel free to contact me at (918) 872-3704 if you have questions.

Sincerely,



Jerry Metcalf MPH, CHMM
Safety/Environmental Manager
Hilti Inc
(918) 872 3704
jerry.metcalf@hilti.com

Rev. Date: 12/19/2014

**Hilti, Inc.**
5400 South 122nd East Avenue
Tulsa, OK 74146

1-800-879-8000
www.hilti.com

February 2015

To Whom It May Concern:

Hilti FS-ONE Intumescent Firestop Sealant is being discontinued and replaced by FS-ONE MAX Intumescent Firestop Sealant. The listed UL/cUL systems on the next page have been updated to include FS-ONE MAX.

Testing is ongoing. Please check online for the most up to date listings.

As compared to FS-ONE, the new FS-ONE MAX offers W-rated systems, superior handling properties, extended shelf life, and is now ethylene glycol free.

The new FS-ONE MAX will be offered in the same package types as the FS-ONE Intumescent Firestop Sealant (cartridge, foil and bucket). Item numbers have changed.

| Item Number | Product Type | Product Name |
|---|---|---|
| 2101534 | Firestop Intumescent Sealant 10 oz. cartridge | FS-ONE MAX |
| 2101535 | Firestop Intumescent Sealant 20 oz. foil | FS-ONE MAX |
| 2101536 | Firestop Intumescent Sealant 5 gallon pail | FS-ONE MAX |

Sincerely,



Kevin Brandon
Fire Protection Product Manager
Hilti, Inc.

United States www.us.hilti.com/firestop
Canada www.hilti.ca/firestop

Testing is ongoing. Please check online for the most up to date listings.

**FS-ONE MAX Intumescent Firestop Sealant for use in Joint System**

BW-S-0001, BW-S-0002, CJ-D-0008, CJ-D-0009, CJ-D-0010, HW-D-0060, HW-D-0061, HW-D-0118, HW-D-0119, HW-D-0120, HW-D-0528, HW-D-0529, HW-D-0530, HW-D-1011, HW-D-1012, HW-D-1020, HW-S-0036, HW-S-0037, HW-S-0038, HW-S-0039, HW-S-0090.

**FS-ONE MAX Intumescent Firestop Sealant for use in Through-Penetration Firestop System**

C-AJ-0070, C-AJ-0090, C-AJ-0138, C-AJ-1149, C-AJ-1150, C-AJ-1151, C-AJ-1152, C-AJ-1153, C-AJ-1154, C-AJ-1155, C-AJ-1156, C-AJ-1158, C-AJ-1172, C-AJ-1173, C-AJ-1174, C-AJ-1177, C-AJ-1184, C-AJ-1226, C-AJ-1278, C-AJ-1291, C-AJ-1326, C-AJ-1342, C-AJ-1346, C-AJ-1380, C-AJ-1421, C-AJ-1454, C-AJ-1513, C-AJ-1534, C-AJ-1575, C-AJ-1597, C-AJ-1609, C-AJ-1610, C-AJ-2062, C-AJ-2066, C-AJ-2091, C-AJ-2094, C-AJ-2095, C-AJ-2098, C-AJ-2109, C-AJ-2110, C-AJ-2118, C-AJ-2141, C-AJ-2164, C-AJ-2167, C-AJ-2168, C-AJ-2169, C-AJ-2170, C-AJ-2217, C-AJ-2218, C-AJ-2220, C-AJ-2283, C-AJ-2284, C-AJ-2285, C-AJ-2294, C-AJ-2304, C-AJ-2305, C-AJ-2335, C-AJ-2336, C-AJ-2337, C-AJ-2342, C-AJ-2343, C-AJ-2371, C-AJ-2372, C-AJ-2393, C-AJ-2402, C-AJ-2407, C-AJ-2419, C-AJ-2420, C-AJ-2434, C-AJ-2435, C-AJ-2451, C-AJ-2468, C-AJ-2469, C-AJ-2488, C-AJ-2567, C-AJ-2569, C-AJ-2570, C-AJ-2599, C-AJ-2600, C-AJ-2613, C-AJ-2631, C-AJ-2632, C-AJ-2639, C-AJ-2647, C-AJ-2667, C-AJ-2674, C-AJ-2677, C-AJ-2700, C-AJ-3069, C-AJ-3070, C-AJ-3078, C-AJ-3079, C-AJ-3084, C-AJ-3095, C-AJ-3096, C-AJ-3152, C-AJ-3180, C-AJ-3198, C-AJ-3209, C-AJ-3232, C-AJ-3236, C-AJ-3239, C-AJ-3281, C-AJ-3283, C-AJ-3284, C-AJ-3285, C-AJ-3298, C-AJ-3318, C-AJ-3319, C-AJ-3320, C-AJ-4034, C-AJ-4035, C-AJ-4071, C-AJ-4083, C-AJ-4093, C-AJ-4094, C-AJ-5044, C-AJ-5045, C-AJ-5046, C-AJ-5047, C-AJ-5048, C-AJ-5057, C-AJ-5061, C-AJ-5069, C-AJ-5090, C-AJ-5091, C-AJ-5096, C-AJ-5184, C-AJ-5185, C-AJ-5198, C-AJ-5277, C-AJ-5289, C-AJ-5301, C-AJ-5320, C-AJ-5341, C-AJ-5342, C-AJ-5343, C-AJ-6017, C-AJ-6042, C-AJ-7006, C-AJ-7051, C-AJ-7084, C-AJ-7095, C-AJ-7098, C-AJ-7103, C-AJ-7104, C-AJ-7111, C-AJ-7122, C-AJ-7123, C-AJ-7140, C-AJ-7145, C-AJ-8038, C-AJ-8041, C-AJ-8044, C-AJ-8056, C-AJ-8058, C-AJ-8081, C-AJ-8099, C-AJ-8100, C-AJ-8107, C-AJ-8110, C-AJ-8143, C-AJ-8166, C-AJ-8178, C-AJ-8207, C-AJ-8208, C-AJ-8209, C-AJ-8210, C-AJ-8211, C-BJ-1034, C-BJ-1037, C-BJ-1045, C-BJ-1046, C-BJ-1055, C-BJ-1059, C-BJ-2011, C-BJ-2012, C-BJ-2013, C-BJ-2014, C-BJ-2016, C-BJ-2017, C-BJ-2021, C-BJ-2028, C-BJ-2040, C-BJ-2041, C-BJ-3024, C-BJ-3031, C-BJ-4025, C-BJ-4026, C-BJ-5006, C-BJ-5007, C-BJ-5013, C-BJ-5015, C-BJ-5018, C-BJ-7005, C-BJ-8010, C-BJ-8013, C-BJ-8024, C-BJ-8027, F-A-1014, F-A-1018, F-A-1028, F-A-1029, F-A-1105, F-A-1108, F-A-1127, F-A-1134, F-A-1135, F-A-1137, F-A-2009, F-A-2025, F-A-2046, F-A-2058, F-A-2067, F-A-2068, F-A-2074, F-A-2075, F-A-2089, F-A-2143, F-A-2154, F-A-2209, F-A-3012, F-A-3022, F-A-5019, F-A-5021, F-A-8004, F-B-2029, F-B-5003, F-C-0002, F-C-1009, F-C-1059, F-C-1106, F-C-1134, F-C-1135, F-C-1142, F-C-1147, F-C-2029, F-C-2030, F-C-2071, F-C-2081, F-C-2128, F-C-2142, F-C-2160, F-C-2189, F-C-2203, F-C-2204, F-C-2230, F-C-2231, F-C-2232, F-C-2262, F-C-2263, F-C-2270, F-C-2310, F-C-2334, F-C-2335, F-C-2382, F-C-2389, F-C-2401, F-C-2403, F-C-2404, F-C-3012, F-C-3044, F-C-3094, F-C-5004, F-C-5036, F-C-5037, F-C-5086, F-C-7013, F-C-7036, F-C-7037, F-C-7042, F-C-7043, F-C-7055, F-C-7057, F-C-7058, F-C-7059, F-C-8009, F-C-8014, F-C-8026, F-C-8038, F-E-1004, F-E-1018, F-E-2005, F-E-2026, F-E-2027, F-E-2028, F-E-2029, F-E-2033, F-E-3005, F-E-3012, F-E-5004, F-E-5013, F-E-7008, F-E-8008, W-J-0007, W-J-0015, W-J-0022, W-J-1020, W-J-1021, W-J-1022, W-J-1028, W-J-1041, W-J-1042, W-J-1058, W-J-1067, W-J-1068, W-J-1088, W-J-1089, W-J-1095, W-J-1174, W-J-1175, W-J-1191, W-J-1193, W-J-1202, W-J-1210, W-J-1214, W-J-1215, W-J-1221, W-J-1222, W-J-1226, W-J-1245, W-J-2019, W-J-2057, W-J-2072, W-J-2091, W-J-2107 W-J-2108, W-J-2115, W-J-2120, W-J-2121, W-J-2191, W-J-2205, W-J-2206, W-J-2207, W-J-2218, W-J-2229, W-J-2230, W-J-2236, W-J-2237, W-J-2242, W-J-2255, W-J-3050, W-J-3060, W-J-3061, W-J-3074, W-J-3121, W-J-3167, W-J-3168, W-J-3188, W-J-3189, W-J-3190, W-J-3196, W-J-3197, W-J-3199, W-J-4016, W-J-4027, W-J-4029, W-J-4048, W-J-4059, W-J-4060, W-J-4072, W-J-5003, W-J-5028, W-J-5041, W-J-5066, W-J-5067, W-J-5122, W-J-5134, W-J-5136, W-J-5145, W-J-5150, W-J-5151, W-J-5152, W-J-6003, W-J-7021, W-J-7022, W-J-7029, W-J-7038, W-J-7091, W-J-7109, W-J-7110, W-J-7112, W-J-7123, W-J-7124, W-J-8004, W-J-8007, W-J-8008, W-J-8009, W-J-8016, W-J-8022, W-J-8034, W-J-8035, W-J-8039, W-J-8043, W-J-8044, W-J-8045, W-J-8047, W-J-8048, W-J-8049, W-J-8050, W-J-8051, W-K-3002, W-L-0013, W-L-0014, W-L-0018, W-L-0019, W-L-0023, W-L-0030, W-L-0040, W-L-0042, W-L-0043, W-L-1054, W-L-1055, W-L-1056, W-L-1057, W-L-1058, W-L-1085, W-L-1092, W-L-1095, W-L-1110, W-L-1111, W-L-1148, W-L-1164, W-L-1165, W-L-1176, W-L-1205, W-L-1206, W-L-1214, W-L-1243, W-L-1252, W-L-1304, W-L-1359, W-L-1367, W-L-1380, W-L-1389, W-L-1392, W-L-1406, W-L-1408, W-L-1410, W-L-1412, W-L-1440, W-L-1441, W-L-1464, W-L-1465, W-L-1496, W-L-1497, W-L-2043, W-L-2044, W-L-2045, W-L-2051, W-L-2052, W-L-2053, W-L-2055, W-L-2075, W-L-2078, W-L-2098, W-L-2124, W-L-2127, W-L-2128, W-L-2165, W-L-2184, W-L-2186, W-L-2196, W-L-2197, W-L-2217, W-L-2236, W-L-2244, W-L-2245, W-L-2251, W-L-2292, W-L-2295, W-L-2315, W-L-2330, W-L-2335, W-L-2340, W-L-2341, W-L-2345, W-L-2377, W-L-2406, W-L-2411, W-L-2444, W-L-2445, W-L-2447, W-L-2453, W-L-2466, W-L-2467, W-L-2471, W-L-2472, W-L-2473, W-L-2474, W-L-2480, W-L-2482, W-L-2509, W-L-2510, W-L-2537, W-L-2538, W-L-2541, W-L-2546, W-L-2557, W-L-2558, W-L-2568, W-L-2583, W-L-2584, W-L-2593, W-L-2602, W-L-2603, W-L-3045, W-L-3046, W-L-3047, W-L-3048, W-L-3049, W-L-3058, W-L-3059, W-L-3065, W-L-3071, W-L-3079, W-L-3112, W-L-3139, W-L-3161, W-L-3185, W-L-3213, W-L-3220, W-L-3224, W-L-3226, W-L-3272, W-L-3278, W-L-3307, W-L-3310, W-L-3320, W-L-3334, W-L-3335, W-L-3382, W-L-3384, W-L-3385, W-L-3391, W-L-3392, W-L-3394, W-L-3396, W-L-4006, W-L-4011, W-L-4019, W-L-4038, W-L-4048, W-L-4060, W-L-4081, W-L-5016, W-L-5021, W-L-5022, W-L-5024, W-L-5025, W-L-5026, W-L-5027, W-L-5028, W-L-5046, W-L-5047, W-L-5073, W-L-5143, W-L-5144, W-L-5223, W-L-5224, W-L-5225, W-L-5240, W-L-5244, W-L-5257, W-L-5259, W-L-5260, W-L-5261, W-L-5263, W-L-5274, W-L-5292, W-L-5293, W-L-5294, W-L-6017, W-L-6019, W-L-7017, W-L-7018, W-L-7040, W-L-7042, W-L-7059, W-L-7068, W-L-7069, W-L-7096, W-L-7121, W-L-7124, W-L-7130, W-L-7151, W-L-7153, W-L-7154, W-L-7155, W-L-7156, W-L-7157, W-L-7158, W-L-7159, W-L-7188, W-L-7198, W-L-8004, W-L-8013, W-L-8014, W-L-8015, W-L-8023, W-L-8035, W-L-8047, W-L-8052, W-L-8059, W-L-8065, W-L-8071, W-L-8079, W-L-8081, W-L-8082, W-L-8085, W-L-8086, W-L-8087, W-L-8093, W-L-8094, W-L-8095, W-L-8098

**FS-ONE MAX Intumescent Firestop Sealant for Canadian-Specific Systems**

C-AJ-0004, C-AJ-1010, C-AJ-1011, C-AJ-1016, C-AJ-1023, C-AJ-1612, C-AJ-2021, C-AJ-2022, C-AJ-2023, C-AJ-2024, C-AJ-2035, C-AJ-2042, C-AJ-2049, C-AJ-2054+, C-AJ-2055+, C-AJ-2056+, C-AJ-2057+, C-AJ-2061, C-AJ-2070, C-AJ-2071, C-AJ-2072, C-AJ-2078, C-AJ-2079, C-AJ-2080, C-AJ-2678, C-AJ-3007, C-AJ-8014, F-A-2009, F-B-2008, F-A-2026+, F-C-2005, F-C-2006, F-C-2007, F-C-2009, F-C-2010, F-C-2035, F-C-2045, F-C-2378+, F-C-2416, F-C-7042, F-E-2005, F-E-2006, W-J-2019, W-J-2027, W-J-2028, W-L-2028, W-L-2050, W-J-2029+, W-J-2030, W-J-2031, W-J-2032, W-J-2245, W-J-2246, W-J-2247, W-J-5136, W-J-7001, W-J-8005, W-L-8005, W-L-0005, W-L-1406, W-L-2018, W-L-2027, W-L-2031, W-L-2032, W-L-2038, W-L-2043, W-L-2044, W-L-2047, W-L-2048, W-L-2052, W-L-2056, W-L-2057, W-L-2060, W-L-2061, W-L-2062, W-L-2406, W-L-2447, W-L-2471, W-L-2472, W-L-2565, W-L-2578, W-L-3307, W-L-5010, W-L-5011, W-L-5259, W-L-5260, W-L-5263, W-J-7007, W-L-8001, W-L-8010.

**FS-ONE MAX Intumescent Firestop Sealant for Intertek Systems**

HI/PHV 120-01 (now HI/PF 120-01) (now HI/PF 120-02), HI/PHV 120-03 (now HI/PF 120-03), HI/PHV 120-04 (now HI/PF 120-04), HI/PHV 120-05 (now HI/PF 120-05), HI/PV 60-01 (now HI/PF 60-01)

## Hilti FS-ONE MAX product substitution letter

# Firestop Putty Pad CFS-P PA

## Product description
- A moldable firestop putty designed to help protect electrical outlet boxes

## Product features
- Applied by hand, no tools required
- Fast, simple installation
- No electrical conductivity
- Paper backing may be left on one side

## Areas of application
- Protection of electrical outlet boxes
- Commercial and residential applications
- Acoustically rated drywall

## For use with
- Gypsum wall assemblies with wood or metal studs

## Examples
- Where two outlets are within a single stud/cavity or within 24" measured horizontally (not back to back unless specified by the specific UL approval)

## Installation instructions for CFS-P PA
**Notice**
- Before handling, read Material Safety Data Sheet and product label for safe usage and health information.
- Refer to the applicable listing (CLIV) in the UL Fire Resistance Directory or Hilti Firestop Systems Guide for complete installation information

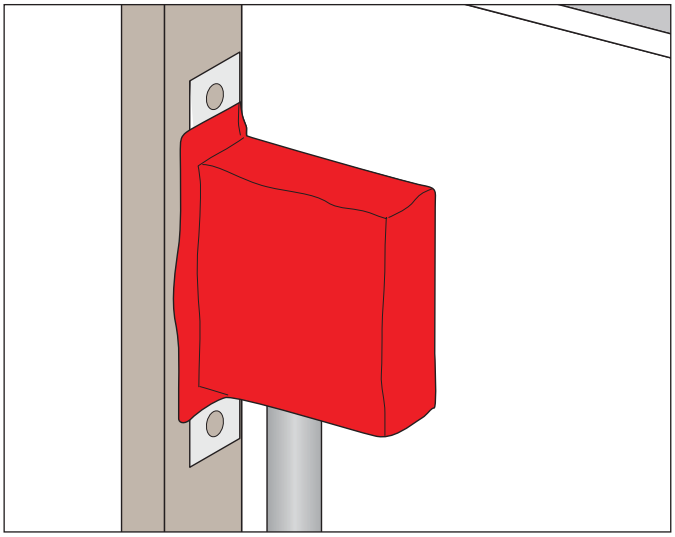

| Technical Data* | CFS-P PA |
|---|---|
| **Dimensions (LxW)** | CFS-P PA: 6" x 7"<br>CFS-P PA: 7.25" x 7.25"<br>CFS-P PA: 9.25" x 9.25" |
| **Consistency** | Moldable putty |
| **Color** | Dark red |
| **Application temperature range** | 32°F to 104°F |
| **Curing time** | Non-curing |
| **Density** | 1.45 g/cm³ |
| **Mold and mildew performance (ASTM G-21)** | Class 0, no growth |
| **Surface burning characteristics (ASTM E 84)** | Flame spread: 0<br>Smoke development: 10 |
| **Sound transmission classification (ASTM E 90-97)** | 59 (Relates to specific construction) |
| **LEED VOC** | 0.18 lb/gal (US) |
| **Tested in accordance with** | UL 263<br>ASTM E 84<br>ASTM G 21<br>ASTM E 90<br>CAN/ULC-S101 |

*At 73°F (23°C) and 50% relative humidity

CLASSIFIED c UL us

WALL OPENING PROTECTIVE MATERIAL
FIRE RESISTANCE CLASSIFICATION
SEE PRODUCT CATEGORY IN
UL FIRE RESISTANCE DIRECTORY
5BP5

**Hilti Firestop**
Saving lives through innovation and education

**Hilti. Outperform. Outlast.**

# MATERIAL SAFETY DATA SHEET

**Product identifier:** **CFS-P PA Putty Pads**

**Product use:** Firestopping putty

**Supplier:** Hilti (Canada) Corporation, 2360 Meadowpine Blvd., Mississauga, Ontario L5N 6S2

**Originator** Hilti, Inc., P. O. Box 21148, Tulsa, Oklahoma, USA 74121

**Emergency number:** **Chem-Trec: 1 800 424 9300**

## INGREDIENTS INFORMATION

| Ingredient | CAS Number | % (wt.) | $LC_{50}$, (rat) | $LD_{50}$ (rat) | TLV | STEL |
|---|---|---|---|---|---|---|
| Calicum carbonate | 1317-65-3 | 15-40 | N/Av | N/Av | NE | NE |
| Clay | 1332-58-7 | 10-30 | N/Av | N/Av | 2 $mg/m^3$(R) | NE |
| 1,3 Propanediol,2,2, bis(hydroxymethyl) | 115-77-5 | 1-5 | N/Av | 19,500 mg/kg | 10 $mg/m^3$ | NE |
| Silica | 14808-60-7 | 0.1-1 | N/Av | N/Av | 0.025 $mg/m^3$(R) | NE |
| Petroleum distillates | 64742-47-8 | 0.1-1 | N/Av | N/Av | NE | NE |

## PHYSICAL PROPERTIES

| | | | |
|---|---|---|---|
| **Appearance / Physical state:** | Red coloured putty. | **Odour:** | Negligible odour. |
| **Specific gravity (at 20ºC):** | 1.39 | **VOC content:** | 21 g/l |
| **Vapour pressure (at 20ºC):** | Not applicable. | **Vapour density:** | Not applicable. |
| **Evaporation rate:** | Not applicable. | **Boiling point:** | Not applicable. |
| **Freezing point:** | Not applicable. | **pH:** | Not determined. |
| **Coefficient of $H_20$ / oil distrib:** | Not applicable. | **Solubility in water:** | Not soluble. |

## FIRE AND EXPLOSION DATA

| | | | |
|---|---|---|---|
| **Flash point / Method** | Not applicable | **Flammable limits:** | Not applicable |
| **Conditions of flammability:** | Not applicable | **Auto-ignition temperature:** | Not applicable |
| **Means of extinction:** | Water, $CO_2$, Dry Chemical, Foam. | | |
| **Special fire fighting procedures:** | None known. A NIOSH-approved self-contained breathing apparatus (SCBA) should be worn when fighting fires involving chemicals. | | |
| **Hazardous combustion products:** | None known. Thermal decomposition products such as oxides of carbon can be produced under fire conditions. | | |
| **Sensitivity to mechanical impact / static discharge:** | Not susceptible to mechanical impact or to a static discharge. | | |

## REACTIVITY DATA

| | | | |
|---|---|---|---|
| **Stability:** | Stable. | **Conditions of reactivity:** | None known. |
| **Incompatible materials:** | None known. | | |
| **Hazardous decomposition products:** | Thermal decomposition can yield CO and $CO_2$. | | |

HILTI ® is a registered trademark of Hilti Corp.

## TOXICOLOGICAL PROPERTIES

| | |
|---|---|
| **Likely routes of exposure:** | ☐ None known ☒ Skin contact ☐ Skin absorption ☒ Eye contact ☐ Inhalation |
| **Exposure limits:** | None established. |
| **Acute effects of exposure:** | **Eyes** - Irritation or watering may occur but injury is unlikely. **Skin** - No effects expected. Irritation is possible with some individuals. **Inhalation** - No effects expected. **Ingestion** - Not considered a route of exposure. No adverse effects known. |
| **Chronic effects of exposure:** | None known. |
| **Synergistic materials:** | None known. |

## FIRST AID MEASURES

| | |
|---|---|
| **Eyes:** | Flush with plenty of water. Call a physician if symptoms occur. |
| **Skin:** | Practice good hygiene; wash before eating or smoking. |
| **Inhalation:** | No effects expected. |
| **Ingestion:** | Not a likely route of exposure. |
| **Other:** | Referral to a physician is recommended if there is any question about the seriousness of the injury/exposure |

## PREVENTIVE MEASURES

| | |
|---|---|
| **Engineering controls:** | General (natural or mechanically induced fresh air movements). |
| **Eye protection:** | Safety glasses with side shields are recommended. |
| **Skin protection:** | Impermeable gloves recommended. |
| **Respiratory protection:** | None normally required. |
| **Other:** | No additional measures are normally required. |
| **Handling procedures and equipment:** | For industrial use only. Do not get into eyes. Avoid prolonged or repeated contact with skin. Practice good hygiene practices; i.e., wash after using and before eating or smoking. |
| **Storage requirements:** | Keep out of reach of children. Store between 5° and 25° C. |
| **Spill, leak or release:** | Not applicable. |
| **Waste disposal:** | Consult with regulatory agencies or your corporate personnel for disposal methods that comply with local, provincial, and federal safety, health and environmental regulations. |
| **Special shipping instructions:** | None known. |

## REGULATORY INFORMATION

| | |
|---|---|
| **WHMIS classification:** | None. |
| **HMIS codes:** | Health 0, Flammability 0, Reactivity 0, PPE A |
| **IATA/ICAO Shipping Name:** | Not regulated. |
| **TDG shipping name:** | Not regulated. |

## PREPARATION INFORMATION / CONTACTS

| | | | | |
|---|---|---|---|---|
| **Prepared by:** | Hilti, Inc., Tulsa, OK USA | Date of Preparation: Dec 2,2013 | **Emergency phone number:** | 1 800 424 9300 |
| **Customer Service:** | Hilti (Canada) Corporation, Mississauga, Ontario; 1 800 363 4458 | | | |
| **Health / Safety contacts:** | Hilti, Inc., Tulsa, OK USA; 1 800 879 6000, Jerry Metcalf (x1003704) | | | |
| **Abbreviations used:** | **N/E** = None Established. **N/Av** = Not Available. **R** = Respirable dust. | | | |

The information and recommendations contained herein are based upon data believed to be correct; however, no guarantee or warranty of any kind expressed or implied is made with respect to the information provided.

# Flexible Firestop Sealant (CP 606)

## Product description

- An acrylic based firestop sealant that provides movement capability in fire rated joints and seals through-penetrations applications

## Product features

- Silicone free
- Halogen, asbestos and solvent free
- Paintable
- Tested up to 33% movement with 500 cycles in accordance to UL 2079 and ASTM 1966
- Smoke and fume resistant
- Easy clean up with water
- Single component systems available
- Meets LEED™ requirements for indoor environmental quality credit 4.1 Low Emitting Materials, Sealants and Adhesives and 4.2 Paints and Coatings

## Areas of application

- Sealing construction/expansion joints
- Top-of-wall joints
- Metal pipes
- Cable bundles
- HVAC penetrations

## For use with

- Various base materials such as masonry, concrete, gypsum, etc.
- Wall and floor assemblies rated up to 3 hours

## Examples

- Where a gypsum wall assembly meets the underside of a metal or concrete deck
- Sealing expansion joints to impede the passage of fire, smoke and toxic fumes
- Sealing around HVAC penetrations through fire-rated assemblies

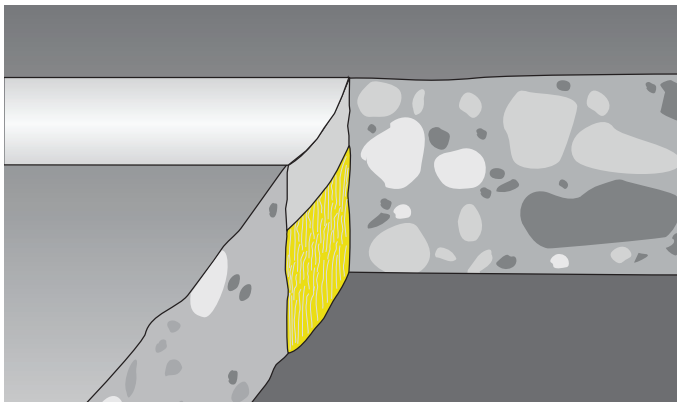

| Technical Data* | CP 606 |
|---|---|
| **Chemical basis** | Acrylic based firestop sealant |
| **Color** | Available in red, white and gray |
| **Application temperature** | 40°F to 104°F (5°C to 40°C) |
| **Skin-forming time** | Approx. 15 min |
| **Curing time** | Approx. 3 mm / 3 days |
| **Average volume shrinkage (ASTM C1241)** | 22.2% |
| **Movement capability** | Approx. 10% |
| **Temperature resistance** | –22°F to 176°F (–30°C to 80°C) |
| **Surface burning characteristics (ASTM E 84-96)** | Flame Spread: 10<br>Smoke Development: 0 |
| **Sound transmission classification (ASTM E 90-99)** | 56<br>(Relates to specific construction) |
| **Tested in accordance with** | • UL 2079 • ASTM E 814 • ASTM E 1966 • CAN/ULC-S115<br>• ASTM E 84 • UL 1479 • ASTM G21 • CAN/ULC-S102 |

*At 73°F (23°C) and 50% relative humidity

CLASSIFIED C UL US

FILL, VOID OR CAVITY MATERIAL
FOR USE IN THROUGH-PENETRATION
FIRESTOP SYSTEMS AND
JOINT SYSTEMS
SEE UL FIRE RESISTANCE DIRECTORY
66Y7

FM APPROVED

## Installation instructions for CP 606

### Notice

- Before handling, read Material Safety Data Sheet and product label for safe usage and health information.
- Instructions below are general guidelines — always refer to the applicable drawing in the UL Fire Resistance Directory or Hilti Firestop Systems Guide for complete installation information
- The use of backing material is recommended to control the sealant depth and help ensure assembly seal is complete

### Opening

1. Clean the opening. Surfaces to which CP 606 will be applied should be cleaned of loose debris, dirt, oil, wax and grease. The surface should be moisture and frost free.

### Application of firestop

2. Insert fill of mineral wool or backer (as required).
3. Apply firestop over backer.
4. Smooth firestop sealant with a trowel before the skin forms. Once cured, CP 606 can only be removed mechanically.
5. For maintenance reasons, a penetration seal can be permanently marked with an identification plate and fastened in a visible position next to the seal.

### Not for use

- On areas immersed in water

### Storage

- Store only in the original packaging in a location protected from moisture at a temperature of 40°F to 77°F (5°C to 25°C)
- Observe expiration date on package

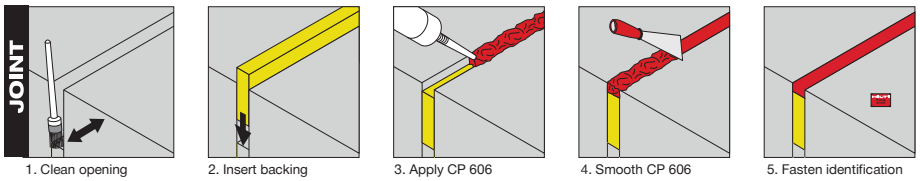


1. Clean opening | 2. Insert backing material compressed per UL System | 3. Apply CP 606 | 4. Smooth CP 606 | 5. Fasten identification plate (if required)

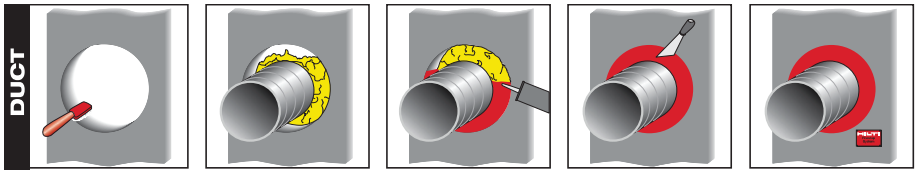


1. Clean opening | 2. Insert backing material | 3. Apply CP 606 | 4. Smooth CP 606 | 5. Fasten identification plate (if required)

**Hilti Firestop**
Saving lives
through innovation
and education

**Hilti. Outperform. Outlast.**

**Date: Jul 4, 2018**

REVIEWED BY CONTRACTOR
Kudlik Construction Ltd.
NAME: Sandra Rousseau P.Eng
DATE: Jul 04, 2018

# Transmittal

**Arctic Electrical Nunavut Ltd**
PO Box 1381
Iqaluit, Nu.
X0A 0H0
Phone: 867-975-3494
**From: Lee Pitcher**

**Project** **Waste Wate Treatment Plant**
**Location** Iqaluit NU
**To** Kudlik Construction
Contact: Sandra Rousseau P.Eng.
srousseau@kudlik.biz



SE-06
PO-P18-120

Attached are the following items:

- [x] Drawings
- [ ] Prints
- [ ] Plans
- [x] Specifications
- [ ] Information
- [ ] Submittals

Other:

THESE ARE TRANSMITTED FOR:

- [ ] Prior Approval
- [x] Approval
- [ ] Approval as Submitted
- [ ] Approval as Noted
- [ ] Resubmittal for Approval
- [ ] Corrections
- [ ] Your Use
- [ ] Review and Comment
- [ ] Record

Bids due on:
Other:

| Qty | Type | MFG | Part |
|---|---|---|---|

Drawing E-601-Automatic Transfer Switch #2

Contractor to review and confirm this is meant to be E-603, Final SLD

STANTEC PROJECT #: 110126045
SUBMITTAL # ELE-006

This review by Stantec is for general conformance with the design concept of Stantec's design of the:
- [ ] Architectural
- [ ] Structural
- [ ] Mechanical
- [x] Electrical
- [ ] Other

Stantec

- [ ] REVIEWED
- [x] REVIEWED, AS NOTED
- [ ] REVISE AND RESUBMIT
- [ ] NOT REVIEWED

DATE 2018-07-10
BY Konrad Goluch

component(s) only and does not mean that Stantec has verified or approves the shop drawing(s). The Contractor remains solely responsible for the shop drawing(s) and this review by Stantec does not relieve the Contractor of the Contractor's responsibility for errors or omissions in the shop drawing(s) or for meeting all requirements of the contract documents. This review does not mean that Stantec approves the detailed design inherent in the shop drawing, responsibility for which shall remain with the Contractor submitting same, nor does this review mean that Stantec accepts any deviation of the shop drawing(s) from the contract documents. The Contractor is responsible for confirming all dimensions and correlating them at the job site, for all construction means, methods and techniques, and for coordination of construction work of all trades, including coordination of all shop drawings.

Provide 4-position switch as per specification 26 36 23 2.3 .1

**Notes:**
Please review the attached approval drawings carefully. Production cannot be scheduled until a signed copy of the final approved drawing are received. Be aware that once drawings are approved, any errors due to incorrect information are the responsibility of the client.

Responsibility lies with the contractor as per the Contract.

Do not hesitate to contact me if you have any questions or concerns.

THOMSON™
POWER SYSTEMS

# Approval Drawings

**Project Name/Reference:** IQALUIT WTP

**Customer:** FRONTIER POWER PRODUCTS

**Thomson Customer Order:** C-058937/1 Rev# 0

**WorkOrder/Serial Number:** W-102488

**Model Number** TS 873B0400A1CN5BKKAA

**Attached Drawings:**

| | | | |
|---|---|---|---|
| Physical Drawing | MBS870M136 | Rev# | 0 |
| AC Schematic | MBS870E100 | Rev# | 4 |
| AC Control Schematic | TSC900E100 | Rev# | 4 |
| DC Control Schematic | TSC900E101 | Rev# | 4 |

**Option Drawings:**

| | | | |
|---|---|---|---|
| STANDARD OPTION SCHEMATIC - PPR-10 | TSC900E300 | Rev# | 3 |
| STANDARD OPTION SCHEMATIC - CTKXXXX | TSC900E304 | Rev# | 3 |
| STANDARD OPTION SCHEMATIC - BYPASS AUX | TSC900E352 | Rev# | 3 |

**Features/Ratings:**

| | |
|---|---|
| Amperage: | 400A |
| Voltage: | 347 - 600V 3 Phase (4 Wire) |
| Poles: | 3POLE |
| Frequency: | 60HZ |
| Configuration | Double Side Bypass |
| Application | Standard ATS |
| Operation | Open Transition Transfer |
| Enclosure Type | NEMA 2 Enclosure |
| ATS Controller | TSC900 |

| | |
|---|---|
| Utility (or Source 1) Switching Device: | Moulded Case Switch |
| Generator (or Source 2) Switching Device: | Moulded Case Switch |
| Approval Standard: | CSA C22.2 No. 178/ UL1008 -non SE ATS |

**System Options:**

| | |
|---|---|
| CTK0400 | 400A Current Tranformer Kit |
| LPM | Transfer Switch Load Power Metering CT K |
| PPR-10 | Programmable Power Relay c/w 10A Form C |
| AUX-BG | Bypass Auxiliary Contact - Generator Side |
| AUX-BU | Bypass Auxiliary Contact - Utility Side |


ATTACHED DOCUMENTS ARE DRAFT FOR REVIEW ONLY AND ARE SUBJECT TO CHANGE WITHOUT NOTICE.

DRAWINGS AND OR OTHER TECHNICAL INFORMATION SUPPLIED BY THOMSON POWER SYSTEMS AS A PART OF A SALE ARE FOR THE PURCHASER'S USE SOLELY IN CONJUNCTION WITH THAT EQUIPMENT, UNLESS SPECIFICALLY AGREED TO OTHERWISE AS A PART OF THE STANDARD TERMS AND CONDITIONS.

THE INFORMATION CONTAINED IN THESE DRAWINGS IS THE PROPERTY OF THOMSON POWER SYSTEMS, IT IS NOT TO BE USED DETRIMENTALLY TO OUR INTERESTS.


NOTE:
ANY PROGRAM SETTINGS SHOWN REFLECT FACTORY DEFAULT SETTINGS ONLY. FINAL SETTINGS WILL BE REQUIRED TO BE SET BY THE COMMISSIONING AUTHORITY. FAILURE TO DO SO MAY RESULT IN EQUIPMENT FAILURE.

## SHOP DRAWING / SUBMITTAL REVIEW

☐ APPROVED ☐ APPROVED WITH CHANGES NOTED

☐ REVISE AND RESUBMIT ☐ REJECTED _____

SUBMITTAL WAS RECEIVED FOR DESIGN CONFORMITY AND GENERAL CONFORMANCE TO CONTRACT DOCUMENTS ONLY. THE CONTRACTOR FOR CONFIRMING AND CORRELATING DIMENSIONS AT JOB SITES FOR TOLERANCES, CLEARANCES, QUANTITIES, FABRICATION PROCESSES AND TECHNIQUES OF CONSTRUCTION, COORDINATION OF HIS WORK WITH OTHER TRADES AND FULL COMPLIANCE WITH CONTRACT

BY _____ DATE _____

COMPANY NAME _____

CITY _____ STATE/PROV _____




9087A - 198th Street, Langley, BC Canada V1M 3B1
Email: info@thomsonps.com www.thomsonps.com


REGAL®

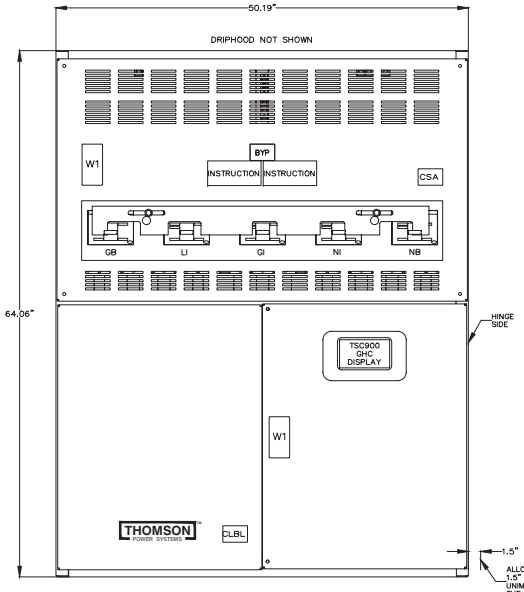


FRONT VIEW

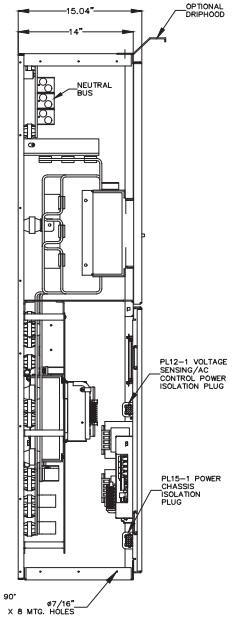


LHS VIEW
(SIDE COVER REMOVED)

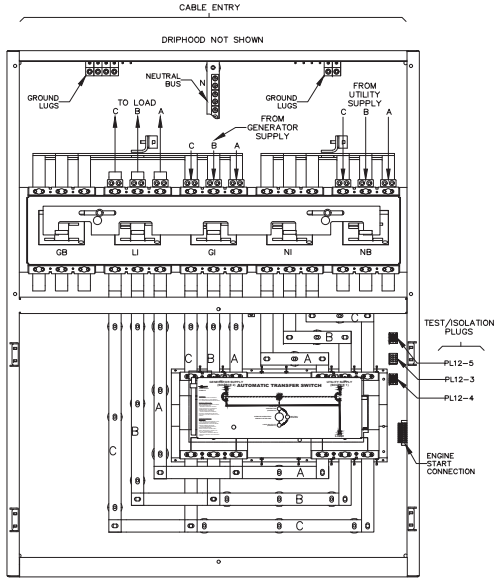


INTERIOR FRONT VIEW
(DOOR NOT SHOWN)

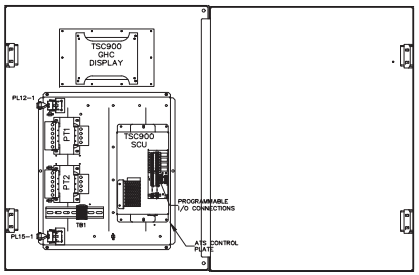


VIEWED FROM REAR OF DOOR
(INSIDE OF ATS SECTION)

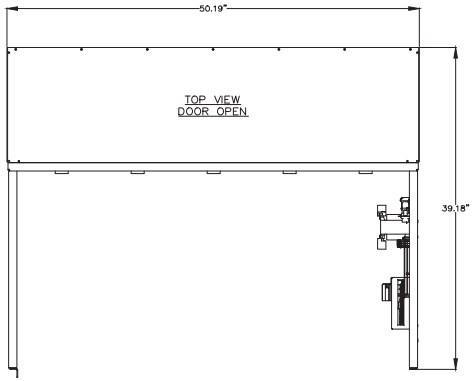


| BASIC MODEL TS87xA | STANDARD ATS | | | | |
|---|---|---|---|---|---|
| | CLOSING AND WITHSTAND RATING AVAILABLE AMPS (RMS) CLOSING & WITHSTAND RATINGS SHOWN ARE ONLY FOR ATS UTILITY AND/OR GENERATOR POWER SWITCHING DEVICE(S) THAT ARE NOT FACTORY SUPPLIED WITH INTEGRAL OVERCURRENT PROTECTION. PLEASE REFER TO PRODUCT INSTRUCTION MANUAL FOR FURTHER INFORMATION ON UPSTREAM PROTECTION REQUIREMENT. | | | | |
| | MAX. VOLTAGE | RATED CURRENT (A) | @240V | @480V | @600V |
| TS 87xA-400 | 600 | 400 | 65,000 | 50,000 | 35,000 |

| SHORT CIRCUIT CURRENT RATING–BYPASS SECTION | | | | |
|---|---|---|---|---|
| SHORT CIRCUIT CURRENT RATINGS – MCS STYLE (ABB) 3, 4 & 5–BREAKER SLIDEBAR INTERLOCKED "CANADIAN" BYPASS LOWEST KA RATINGS APPLICABLE TO MCS'S & MCCB'S THAT ARE USED IN BYPASSES (CERTIFIED TO CSA #31) | | | | |
| ATS RATING (AMPS) | BYPASS BREAKER FRAME (ABB) | @240V | @480V | @600V |
| 400 | T6H | 65,000 | 50,000 | 35,000 |

| CONNECTION DATA | | |
|---|---|---|
| 400A ATS | UTILITY (SRC1) | 1–2C, 2/0–500MCM Cu/Al PER PHASE |
| | GENERATOR (SRC2) | 1–2C, 2/0–500MCM Cu/Al PER PHASE |
| | LOAD | 1–2C, 2/0–500MCM Cu/Al PER PHASE |
| | NEUTRAL | 1–2C, 2/0–500MCM Cu/Al PER SOURCE |
| | GROUND | 6C, #6–250MCM Cu/Al |

| GENERAL NOTES | |
|---|---|
| 1 | POWER SWITCHING DEVICES ARE MECHANICALLY INTERLOCKED SO THAT ONLY ONE DEVICE IS CLOSED AT A TIME |
| 2 | BYPASS SWITCHING DEVICES ARE MECHANICALLY INTERLOCKED THROUGH A SLIDE BAR INTERLOCK. BYPASS IS CLOSED TRANSITION. REFER BELOW CHART |
| 3 | NEMA 2 ENCLOSURE C/W DRIPHOOD |
| 4 | NEMA 12 ENCLOSURE C/W GASKETING |
| 5 | FOR 1 PHASE, 3 WIRE SOLID NEUTRAL APPLICATION, CONNECT PHASE TO 'A' & 'B'. OMIT 'C' |
| 6 | FOR 1 PHASE, 3 WIRE SWITCHED NEUTRAL APPLICATION, CONNECT PHASE TO 'A' & 'B'. CONNECT NEUTRAL TO 'C' |
| 7 | REFER COVER PAGE / SELECTED OPTION LIST FOR PROJECT SPECIFIC DETAILS |

2.5" x 5"

W1

**DANGER**
**PELIGRO**

**Arc Flash and Shock Hazard**
Will cause severe injury or death. Wear flash-over line circuit-see diagram. Disconnect all sources of supply before servicing. This equipment must be installed and serviced only by qualified electrical personnel utilizing safe work practices and appropriate Personal Protective Equipment (PPE). Failure to comply may result in injury or death! Refer to NFPA 70E for minimum PPE requirements.

**Risque d'Arc Electrique et d'Electrocution**
Peut causer des blessures graves ou la mort. Pour d'un circuit sous tension - voir schema. Couper toutes les sources d'alimentation avant de faire l'entretien et les reparations. Ce materiel doit etre installé et entretenu uniquement par un electricien qualifié. Ce dernier doit connaître les pratiques de travail sécuritaires et porter l'équipment de protection individuelle approprié. Le non respect mai entrainer des blessures ou la mort! Reportez-vous a NFPA 70E pour le manuel des exigences minimales PPE.

**Riesgo de Arco y Choque Eléctrico**
Se causarán lesiones graves o muerte. Más de un circuito energizado - ver diagrama. Desconectar todas las fuentes de suministro antes de hacer mantenimiento. Este equipo solo se debe instalar y mantener por personal calificado, usando medidas de seguridad y equipo de protección personal adecuados. No seguir estas recomendaciones puede causar lesiones o muerte! Consultar la NFPA 70E para los requisitos mínimos del equipo de protección personal (PPE).

QTY = 1

| SWITCHING DEVICE | INTERLOCK POSITION | | | | | |
|---|---|---|---|---|---|---|
| | UTILITY BYPASS | TRANSITION INTERLOCKING | | | | GENERATOR BYPASS |
| | 1 | 2 | 3 | 4 | 5 | |
| NB | ⊠ | ⊠ | | | | |
| NI | | ⊠ | ⊠ | | | |
| LI | | | ⊠ | ⊠ | | |
| GI | | | | ⊠ | ⊠ | |
| GB | | | | | ⊠ | |

BYPASS SLIDE BAR INTERLOCK

⊠ = SWITCH CLOSURE ALLOWED

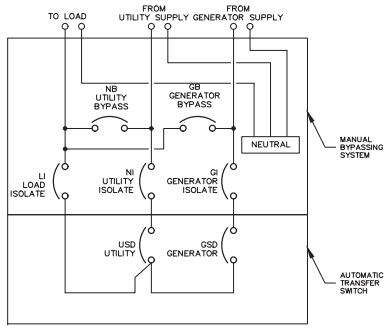


SINGLE LINE DIAGRAM

FOR REVIEW ONLY

DRAWINGS AND OR OTHER TECHNICAL INFORMATION SUPPLIED BY THOMSON POWER SYSTEMS AS A PART OF A SALE OF EQUIPMENT ARE FOR THE PURCHASER'S USE SOLELY IN CONJUNCTION WITH THAT EQUIPMENT, UNLESS SPECIFICALLY AGREED TO OTHERWISE AS A PART OF THE TERMS OF SALE.

☐ APPROVED FOR CONSTRUCTION
☐ MASTER COPY ☐ REFERENCE COPY ____ OF ____
☐ MULTIPLE UNIT WORK ORDER
☐ RELEASED FOR INFORMATION
AUTH. BY: _____ DATE: _____

CROSS REFERENCE LEGEND
5 0 C – C – 1
GRID COORDINATE
SHEET No.

| DRAWING No. | REFERENCE DRAWINGS |
|---|---|

| No. | REVISIONS | BY | AUTH | DATE |
|---|---|---|---|---|
| 1 | GENERAL NOTES AND LOGO UPDATED | AP | OG | 17–10–24 |

THOMSON POWER SYSTEMS

# AUTOMATIC TRANSFER SWITCH
## MODEL TS 870
## PHYSICAL LAYOUT & INSTALLATION DETAILS
400A, 2P/3P, NEMA 1/2/12 SD, MCS DOUBLE BYPASS, STD

| CUSTOMER | THOMSON POWER SYSTEMS | | |
|---|---|---|---|
| CUSTOMER ORDER No. | WORK ORDER No. | | |
| C–XXXXX | W–XXXXX | | |
| DRAWN BY | AUTH BY | DATE | REV |
| AP | OG | 16–01–26 | 1 |
| DRAWING/FILE No. | | SHEET | |
| MBS870M136 | | 10A | |

© THE INFORMATION ON THIS DRAWING IS THE PROPERTY OF THOMSON POWER SYSTEMS. IT IS NOT TO BE USED DETRIMENTALLY TO OUR INTERESTS.

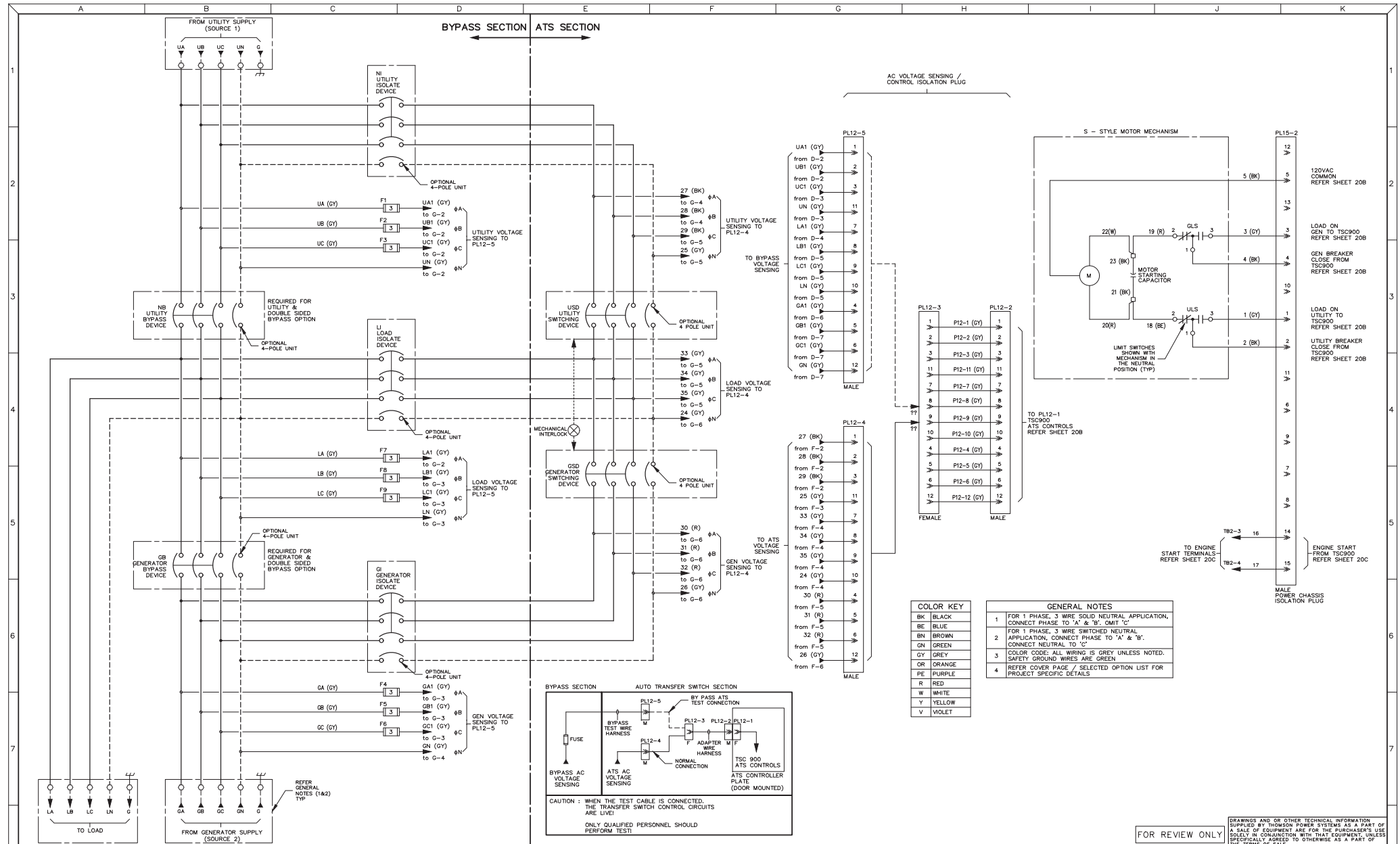


| COLOR KEY | |
|---|---|
| BK | BLACK |
| BE | BLUE |
| BN | BROWN |
| GN | GREEN |
| GY | GREY |
| OR | ORANGE |
| PE | PURPLE |
| R | RED |
| W | WHITE |
| Y | YELLOW |
| V | VIOLET |

| GENERAL NOTES | |
|---|---|
| 1 | FOR 1 PHASE, 3 WIRE SOLID NEUTRAL APPLICATION, CONNECT PHASE TO 'A' & 'B'. OMIT 'C' |
| 2 | FOR 1 PHASE, 3 WIRE SWITCHED NEUTRAL APPLICATION, CONNECT PHASE TO 'A' & 'B'. CONNECT NEUTRAL TO 'C' |
| 3 | COLOR CODE: ALL WIRING IS GREY UNLESS NOTED. SAFETY GROUND WIRES ARE GREEN |
| 4 | REFER COVER PAGE / SELECTED OPTION LIST FOR PROJECT SPECIFIC DETAILS |

FOR REVIEW ONLY

☐ APPROVED FOR CONSTRUCTION
☐ MASTER COPY ☐ REFERENCE COPY ____ OF ____
☐ MULTIPLE UNIT WORK ORDER
☐ RELEASED FOR INFORMATION
AUTH. BY: _____ DATE: _____

CROSS REFERENCE LEGEND
5 0 C – C – 1
GRID COORDINATE
SHEET No.

| DRAWING No. | REFERENCE DRAWINGS |
|---|---|

| No. | REVISIONS | BY | AUTH | DATE |
|---|---|---|---|---|
| 4 | GENERAL NOTES AND LOGO UPDATED | AP | OG | 17–10–24 |
| 3 | REMOVED T–STYLE OPTION | SR | OG | 17–08–16 |
| 2 | PRODUCT RANGE CHANGED TO 100–800A | SR | OG | 17–01–24 |
| 1 | WIRE HARNESS UPDATED AS PER ECR–0114744 | AP | OG | 16–07–22 |

THOMSON™ POWER SYSTEMS

# AUTOMATIC TRANSFER SWITCH
## MODEL TS 870
## MCS BYPASS AC SCHEMATIC, T–STYLE / S–STYLE, STD
100 – 800A

DRAWINGS AND OR OTHER TECHNICAL INFORMATION SUPPLIED BY THOMSON POWER SYSTEMS AS A PART OF A SALE OF EQUIPMENT ARE FOR THE PURCHASER'S USE SOLELY IN CONJUNCTION WITH THAT EQUIPMENT, UNLESS SPECIFICALLY AGREED TO OTHERWISE AS A PART OF THE TERMS OF SALE.

| | |
|---|---|
| CUSTOMER | THOMSON POWER SYSTEMS |
| CUSTOMER ORDER No. | C–XXXXXX |
| WORK ORDER No. | W–XXXXXX |
| DRAWN BY | AP |
| AUTH BY | OG |
| DATE | 16–01–26 |
| REV | 4 |
| DRAWING/FILE No. | MBS870E100 |
| SHEET | 20A |

© THE INFORMATION ON THIS DRAWING IS THE PROPERTY OF THOMSON POWER SYSTEMS. IT IS NOT TO BE USED DETRIMENTALLY TO OUR INTERESTS.

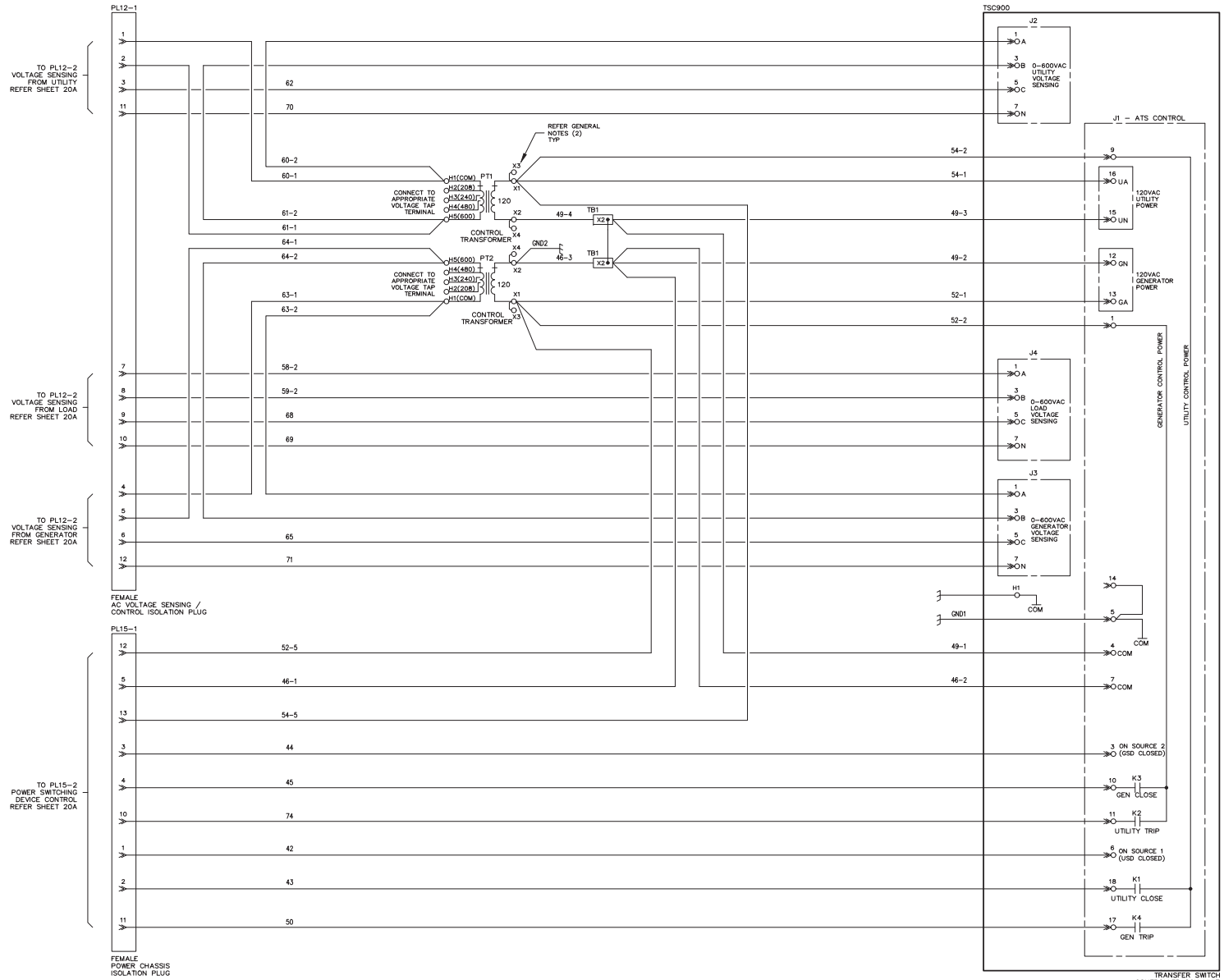


| GENERAL NOTES | |
|---|---|
| 1 | CONTROL TRANSFORMER IS RATED FOR 100VA FOR MCS ATS & 200VA FOR ATS MECHANISM USING TRIP & CLOSE COILS |
| 2 | 100VA CONTROL TRANSFORMER DOES NOT INCLUDE A 2ND 120VAC SECONDARY WIRING (X3/X4) |
| 3 | COLOR CODE: ALL WIRING IS GREY UNLESS NOTED. SAFETY GROUND WIRES ARE GREEN |
| 4 | REFER COVER PAGE / SELECTED OPTION LIST FOR PROJECT SPECIFIC DETAILS |

VOLTAGE (X DENOTES HIGH POLARITY MARKER)

| PT TAP | 208 | 240 | 380 | 400 | 416 | 480 | 600 |
|---|---|---|---|---|---|---|---|
| H1 | X | X | | | | X | X |
| H2 | | | X | X | | | |
| H3 | X | | | | | | |
| H4 | | | | | X | X | |
| H5 | | X | X | X | X | | X |

| COLOR KEY | |
|---|---|
| BK | BLACK |
| BE | BLUE |
| BN | BROWN |
| GN | GREEN |
| GY | GREY |
| OR | ORANGE |
| PE | PURPLE |
| R | RED |
| W | WHITE |
| Y | YELLOW |
| V | VIOLET |

☐ APPROVED FOR CONSTRUCTION
☐ MASTER COPY ☐ REFERENCE COPY ____ OF ____
☐ MULTIPLE UNIT WORK ORDER
☐ RELEASED FOR INFORMATION
AUTH. BY: _____ DATE: _____

CROSS REFERENCE LEGEND
SOC-C-1
GRID COORDINATE
SHEET No.

DRAWING No. | REFERENCE DRAWINGS

| No. | REVISIONS | BY | AUTH | DATE |
|---|---|---|---|---|
| 4 | TSC900 CONFIGURATION UPDATED | AP | OG | 17-11-17 |
| 3 | GENERAL NOTES AND LOGO UPDATED | AP | OG | 17-10-24 |
| 2 | UPDATED MOS CONTROL PLATE PID | SK | OG | 17-08-16 |
| 1 | WIRE HARNESS UPDATED AS PER ECR-0114744 | AP | OG | 16-07-22 |

THOMSON POWER SYSTEMS

# AUTOMATIC TRANSFER SWITCH
# TSC 900 TRANSFER SWITCH CONTROLLER
# ATS AC CONTROL SCHEMATIC, STD
100 – 4000A

FOR REVIEW ONLY

DRAWINGS AND OR OTHER TECHNICAL INFORMATION SUPPLIED BY THOMSON POWER SYSTEMS AS A PART OF A SALE OF EQUIPMENT ARE FOR THE PURCHASER'S USE SOLELY IN CONJUNCTION WITH THAT EQUIPMENT, UNLESS SPECIFICALLY AGREED TO OTHERWISE AS A PART OF THE TERMS OF SALE.

| | |
|---|---|
| CUSTOMER | THOMSON POWER SYSTEMS |
| CUSTOMER ORDER No. | C-XXXXXX |
| WORK ORDER No. | W-XXXXXX |
| DRAWN BY | AP |
| AUTH BY | OG |
| DATE | 16-01-26 |
| REV | 4 |
| DRAWING/FILE No. | TSC900E100 |
| SHEET | 20B |

© THE INFORMATION ON THIS DRAWING IS THE PROPERTY OF THOMSON POWER SYSTEMS. IT IS NOT TO BE USED DETRIMENTALLY TO OUR INTERESTS.

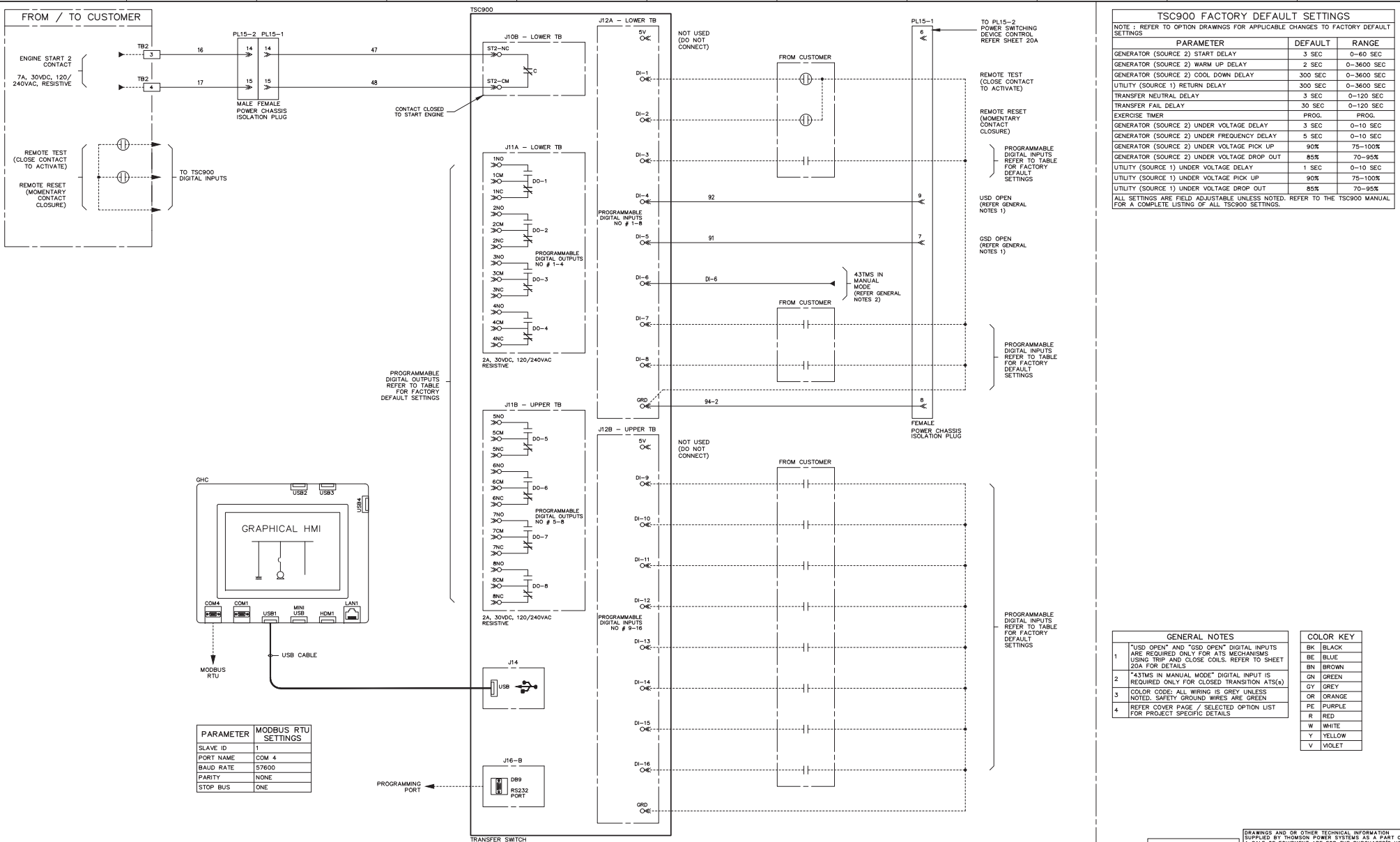


| PARAMETER | MODBUS RTU SETTINGS |
|---|---|
| SLAVE ID | 1 |
| PORT NAME | COM 4 |
| BAUD RATE | 57600 |
| PARITY | NONE |
| STOP BUS | ONE |

## TSC900 FACTORY DEFAULT SETTINGS

NOTE : REFER TO OPTION DRAWINGS FOR APPLICABLE CHANGES TO FACTORY DEFAULT SETTINGS

| PARAMETER | DEFAULT | RANGE |
|---|---|---|
| GENERATOR (SOURCE 2) START DELAY | 3 SEC | 0–60 SEC |
| GENERATOR (SOURCE 2) WARM UP DELAY | 2 SEC | 0–3600 SEC |
| GENERATOR (SOURCE 2) COOL DOWN DELAY | 300 SEC | 0–3600 SEC |
| UTILITY (SOURCE 1) RETURN DELAY | 300 SEC | 0–3600 SEC |
| TRANSFER NEUTRAL DELAY | 3 SEC | 0–120 SEC |
| TRANSFER FAIL DELAY | 30 SEC | 0–120 SEC |
| EXERCISE TIMER | PROG. | PROG. |
| GENERATOR (SOURCE 2) UNDER VOLTAGE DELAY | 3 SEC | 0–10 SEC |
| GENERATOR (SOURCE 2) UNDER FREQUENCY DELAY | 5 SEC | 0–10 SEC |
| GENERATOR (SOURCE 2) UNDER VOLTAGE PICK UP | 90% | 75–100% |
| GENERATOR (SOURCE 2) UNDER VOLTAGE DROP OUT | 85% | 70–95% |
| UTILITY (SOURCE 1) UNDER VOLTAGE DELAY | 1 SEC | 0–10 SEC |
| UTILITY (SOURCE 1) UNDER VOLTAGE PICK UP | 90% | 75–100% |
| UTILITY (SOURCE 1) UNDER VOLTAGE DROP OUT | 85% | 70–95% |

ALL SETTINGS ARE FIELD ADJUSTABLE UNLESS NOTED. REFER TO THE TSC900 MANUAL FOR A COMPLETE LISTING OF ALL TSC900 SETTINGS.

## GENERAL NOTES

| | |
|---|---|
| 1 | "USD OPEN" AND "GSD OPEN" DIGITAL INPUTS ARE REQUIRED ONLY FOR ATS MECHANISMS USING TRIP AND CLOSE COILS. REFER TO SHEET 20A FOR DETAILS |
| 2 | "43TMS IN MANUAL MODE" DIGITAL INPUT IS REQUIRED ONLY FOR CLOSED TRANSITION ATS(s) |
| 3 | COLOR CODE: ALL WIRING IS GREY UNLESS NOTED. SAFETY GROUND WIRES ARE GREEN |
| 4 | REFER COVER PAGE / SELECTED OPTION LIST FOR PROJECT SPECIFIC DETAILS |

## COLOR KEY

| | |
|---|---|
| BK | BLACK |
| BE | BLUE |
| BN | BROWN |
| GN | GREEN |
| GY | GREY |
| OR | ORANGE |
| PE | PURPLE |
| R | RED |
| W | WHITE |
| Y | YELLOW |
| V | VIOLET |

FOR REVIEW ONLY

☐ APPROVED FOR CONSTRUCTION
☐ MASTER COPY ☐ REFERENCE COPY ____ OF ____
☐ MULTIPLE UNIT WORK ORDER
☐ RELEASED FOR INFORMATION
AUTH. BY: _____ DATE: _____

CROSS REFERENCE LEGEND
5 0 C – C – 1
GRID COORDINATE
SHEET No.
DRAWING No. | REFERENCE DRAWINGS

| No. | REVISIONS | BY | AUTH | DATE |
|---|---|---|---|---|
| 4 | TSC900 CONFIGURATION UPDATED | AP | OG | 17–11–17 |
| 3 | GENERAL NOTES AND LOGO UPDATED | AP | OG | 17–10–24 |
| 2 | UPDATED MOS CONTROL PLATE PID | SK | OG | 17–08–16 |
| 1 | WIRE HARNESS UPDATED AS PER ECR–0114744 | AP | OG | 16–07–22 |

THOMSON™ POWER SYSTEMS

# AUTOMATIC TRANSFER SWITCH
# TSC 900 TRANSFER SWITCH CONTROLLER
# ATS DC CONTROL SCHEMATIC, STD
100 – 4000A

DRAWINGS AND OR OTHER TECHNICAL INFORMATION SUPPLIED BY THOMSON POWER SYSTEMS AS A PART OF A SALE OF EQUIPMENT ARE FOR THE PURCHASER'S USE SOLELY IN CONJUNCTION WITH THAT EQUIPMENT, UNLESS SPECIFICALLY AGREED TO OTHERWISE AS A PART OF THE TERMS OF SALE.

CUSTOMER THOMSON POWER SYSTEMS
CUSTOMER ORDER No. C–XXXXXX
WORK ORDER No. W–XXXXXX
DRAWN BY AP | AUTH BY OG | DATE 16–01–26 | REV 4
DRAWING/FILE No. TSC900E101
SHEET 20C

© THE INFORMATION ON THIS DRAWING IS THE PROPERTY OF THOMSON POWER SYSTEMS. IT IS NOT TO BE USED DETRIMENTALLY TO OUR INTERESTS.

# ☐ PPR–10 OPTION

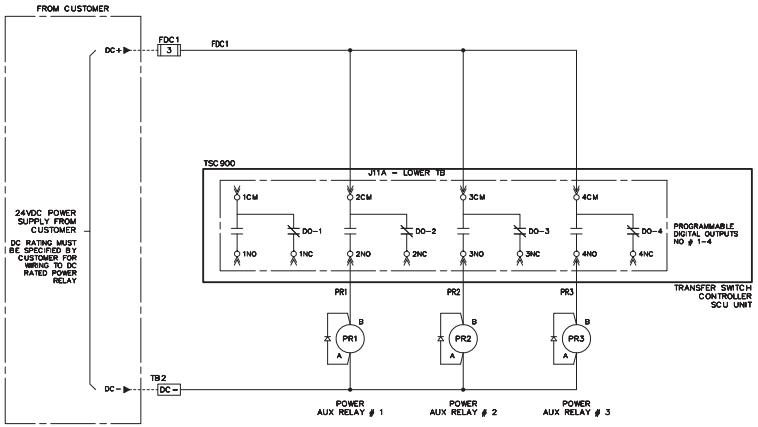


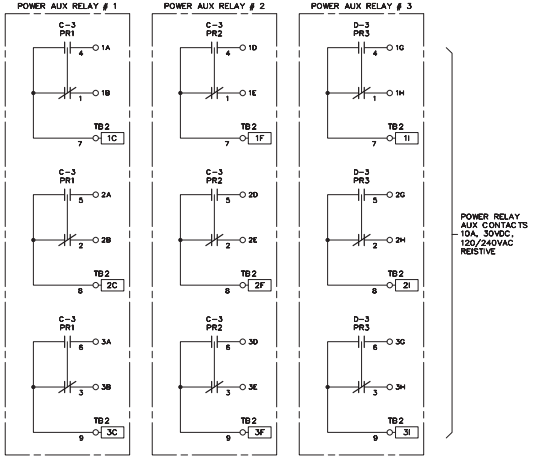


| PR1 | | | |
|---|---|---|---|
| T1 | TYPE | T2 | REF |
| 4 | +h | 7 | A–5 |
| 1 | -w | | |
| 5 | +h | 8 | A–6 |
| 2 | -w | | |
| 6 | +h | 9 | A–7 |
| 3 | -w | | |

| PR2 | | | |
|---|---|---|---|
| T1 | TYPE | T2 | REF |
| 4 | +h | 7 | B–5 |
| 1 | -w | | |
| 5 | +h | 8 | B–6 |
| 2 | -w | | |
| 6 | +h | 9 | B–7 |
| 3 | -w | | |

| PR3 | | | |
|---|---|---|---|
| T1 | TYPE | T2 | REF |
| 4 | +h | 7 | C–5 |
| 1 | -w | | |
| 5 | +h | 8 | C–6 |
| 2 | -w | | |
| 6 | +h | 9 | C–7 |
| 3 | -w | | |

| PPR–10 OPTION NOTES | |
|---|---|
| 1 | FOR POWER RELAY FUNCTIONAL DESCRIPTION REFER TO FACTORY DEFAULT DIGITAL OUTPUT FUNCTION TABLE ON ATS DC CONTROL SCHEMATIC |
| 2 | THE NUMBER OF RELAYS SUPPLIED WILL BE PER ORDERED QUANTITY |
| 3 | CUSTOMER TO WIRE DIRECTLY TO RELAY TERMINALS |
| 4 | SPECIFIED QUANTITY OF PROGRAMMABLE POWER RELAYS ARE WIRED FOR CUSTOMER AS PER OPTION LIST |
| 5 | DC SUPPLY FOR THE RELAYS, BY DEFAULT IS 24VDC. PLEASE SPECIFY THE VOLTAGE RATING OTHER THAN 24VDC ON OPTION LIST |

| BILL OF MATERIALS | | |
|---|---|---|
| PART DESCRIPTION | PART ID | QTY |
| RELAY, 24VDC COIL, 11 PIN SQ., /W LED | 004095 | 3 |
| RELAY SOCKET, 11 PIN, SQ., RAIL MOUNT | 000399 | 3 |
| FUSE HOLDER, 1P, 30A, 600V, 200KA, CC | 002374 | 1 |
| FUSE, 3A, 600VAC, CLASS CC | 003633 | 1 |
| TERM. BLK, RAIL MNT, 40A, 600V, WK4/U, | 001881 | 10 |

| GENERAL NOTES | |
|---|---|
| 1 | FOR MCS/MOS/PCS TYPE ATS, MOUNT THE RELAYS ON SIDE COVER WHERE SPACE PERMITS |
| 2 | FOR ICS ATS MOUNT THE RELAYS ON BACK PAN WHERE EVER THE SPACE PERMITS |
| 3 | REFER COVER PAGE / SELECTED OPTION LIST FOR PROJECT SPECIFIC DETAILS |

PPR RELAY
[TYPICAL]

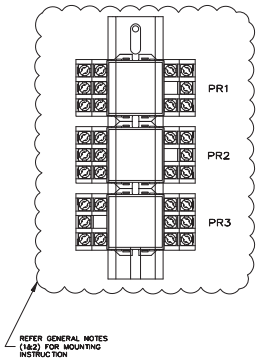


FOR REVIEW ONLY

DRAWINGS AND OR OTHER TECHNICAL INFORMATION SUPPLIED BY THOMSON POWER SYSTEMS AS A PART OF A SALE OF EQUIPMENT ARE FOR THE PURCHASER'S USE IN CONJUNCTION WITH THAT EQUIPMENT, UNLESS SPECIFICALLY AGREED TO OTHERWISE AS A PART OF THE TERMS OF SALE.

☐ APPROVED FOR CONSTRUCTION
☐ MASTER COPY ☐ REFERENCE COPY ____ OF ____
☐ MULTIPLE UNIT WORK ORDER
☐ RELEASED FOR INFORMATION
AUTH. BY: _____ DATE: _____

CROSS REFERENCE LEGEND
50C – C – 1
GRID COORDINATE
SHEET No.

DRAWING No. | REFERENCE DRAWINGS

| No. | REVISIONS | BY | AUTH | DATE |
|---|---|---|---|---|
| 4 | DRAWINGS UPDATED FOR TS970 PRODUCT LINE APPLICATION | SK | OG | 18-03-08 |
| 3 | GENERAL NOTES AND LOGO UPDATED | AP | OG | 17-10-24 |
| 2 | MOUNTING INSTRUCTION UPDATED | SK | OG | 16-09-21 |
| 1 | WIRE HARNESS UPDATED AS PER ECR-0114744 | AP | OG | 16-07-22 |

THOMSON POWER SYSTEMS™

# AUTOMATIC TRANSFER SWITCH
## MODEL TS 870 / 880 / 970
## STANDARD OPTION SCHEMATIC – PPR–10
POWER AUX RELAY

CUSTOMER THOMSON POWER SYSTEMS
CUSTOMER ORDER No. C–XXXXXX
WORK ORDER No. W–XXXXXX
DRAWN BY AP | AUTH BY OG | DATE 16–01–26 | REV 4
DRAWING/FILE No. TSC900E300
SHEET 30A

© THE INFORMATION ON THIS DRAWING IS THE PROPERTY OF THOMSON POWER SYSTEMS. IT IS NOT TO BE USED DETRIMENTALLY TO OUR INTERESTS.

## ☐ CTKXXXX OPTION

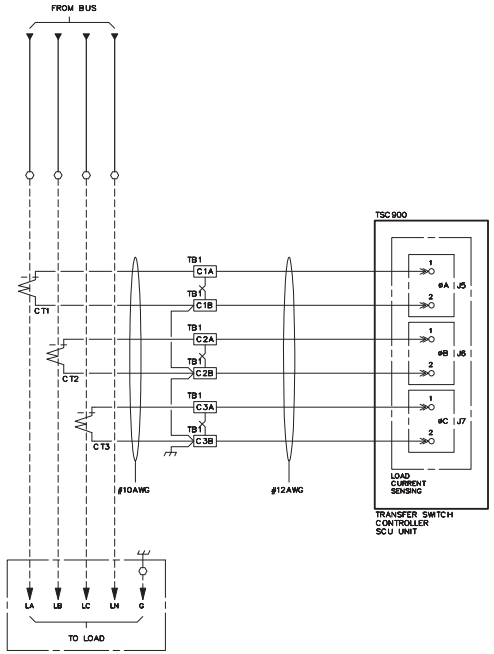


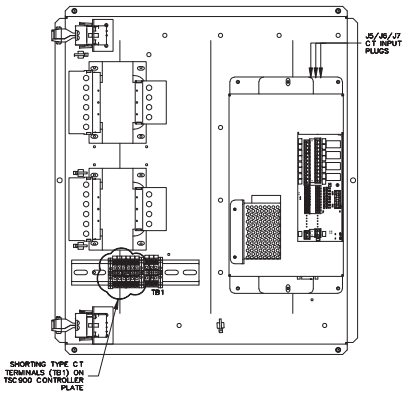


ATS CONTROL PLATE

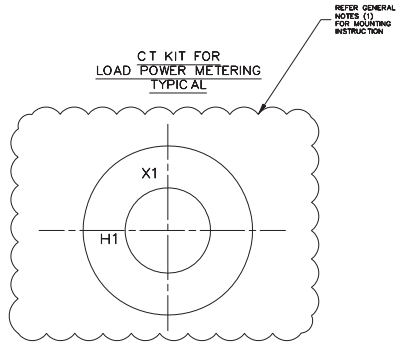


| PART ID | OPTION KITS |
|---|---|
| CTK0100 | 100 AMPS |
| CTK0150 | 150 AMPS |
| CTK0250 | 200–250 AMPS |
| CTK0400 | 400 AMPS |
| CTK0600 | 600 AMPS |
| CTK0800 | 800 AMPS |
| CTK1200 | 1000–1200 AMPS |
| CTK1600 | 1600 AMPS |
| CTK2000 | 2000 AMPS |

| GENERAL NOTES | |
|---|---|
| 1 | CT'S TO BE MOUNTED ON THE LOAD SIDE OF THE ATS. CUSTOMER TO VERIFY POLARITY BEFORE CONNECTING THE CT SECONDARIES TO THE TRANSFER SWITCH CONTROLLER. |
| 2 | ATS CONTROL PLATE MOUNTED ON THE BACK SIDE OF DOOR FOR MCS / MOS / PCS AND FOR ICS MOUNTED ON THE BACKPAN. |
| 3 | REFER COVER PAGE / SELECTED OPTION LIST FOR PROJECT SPECIFIC DETAILS |

| BILL OF MATERIALS FOR CABLE HARNESS | | |
|---|---|---|
| PART DESCRIPTION | PART ID | QTY |
| WIRE, 18AWG, GREY, TINNED, TEW, 600V, | 002027 | 600 INCHES |
| TERM. BLK, RAIL MNT, 40A, 600V, WK4/U, | 001861 | 6 |
| TERM. BLK, ENDPLATE, WK 2.5-4/U, | 001872 | 1 |
| SCREW, SHT-MTL, RDH, ROB #8 X 5/8" | 002070 | 2 |
| MTG-RAIL, TYPE-35, SLOTTED(7.5X2-METERS) | 002795 | 6 |
| TERM. BLK, PARTITION PLATE, WK2.5-4/U, | 004189 | 2 |
| CONN, MINI-FIT, J, 94V-2, 2X1-WAY,FEMALE (J5/J6/J7) | 012654 | 3 |
| CONN, FEMALE CRIMP, MINI-FIT, JR. SERIES | 010954 | 6 |
| WIRE SLEEVE, 0.5", EXPANDO PT PLUS, | 000458 | 175 INCHES |
| TERM BLK CROSS CONN.W SCRW WK4/U SR7 | 009677 | 3 |
| TERM. BLK, EARTH TERMINAL, 10-24 AWG | 005211 | 2 |

FOR REVIEW ONLY

DRAWINGS AND OR OTHER TECHNICAL INFORMATION SUPPLIED BY THOMSON POWER SYSTEMS AS A PART OF A SALE OF EQUIPMENT ARE FOR THE PURCHASER'S USE IN CONJUNCTION WITH THAT EQUIPMENT, UNLESS SPECIFICALLY AGREED TO OTHERWISE AS A PART OF THE TERMS OF SALE.

☐ APPROVED FOR CONSTRUCTION
☐ MASTER COPY ☐ REFERENCE COPY ____ OF ____
☐ MULTIPLE UNIT WORK ORDER
☐ RELEASED FOR INFORMATION
AUTH. BY: ____ DATE: ____

CROSS REFERENCE LEGEND
50C-C-1
GRID COORDINATE
SHEET No.

DRAWING No. | REFERENCE DRAWINGS

| No. | REVISIONS | BY | AUTH | DATE |
|---|---|---|---|---|
| 4 | DRAWINGS UPDATED FOR TS970 PRODUCT LINE APPLICATION | SK | OG | 18-03-08 |
| 3 | GENERAL NOTES AND LOGO UPDATED | AP | OG | 17-10-24 |
| 2 | MOUNTING INSTRUCTION UPDATED | SK | OG | 16-09-21 |
| 1 | WIRE HARNESS UPDATED AS PER ECR-0114744 | AP | OG | 16-07-22 |

THOMSON POWER SYSTEMS™

# AUTOMATIC TRANSFER SWITCH
## MODEL TS 870 / 880 / 970
## STANDARD OPTION SCHEMATIC – CTKXXXX
### CURRENT TRANSFORMER KIT

CUSTOMER: THOMSON POWER SYSTEMS
CUSTOMER ORDER No.: C-XXXXXX
WORK ORDER No.: W-XXXXXX
DRAWN BY: AP | AUTH BY: OG | DATE: 16-01-26 | REV: 4
DRAWING/FILE No.: TSC900E304
SHEET: 30E

© THE INFORMATION ON THIS DRAWING IS THE PROPERTY OF THOMSON POWER SYSTEMS. IT IS NOT TO BE USED DETRIMENTALLY TO OUR INTERESTS.

## ☐ AUX BU/ BG OPTION

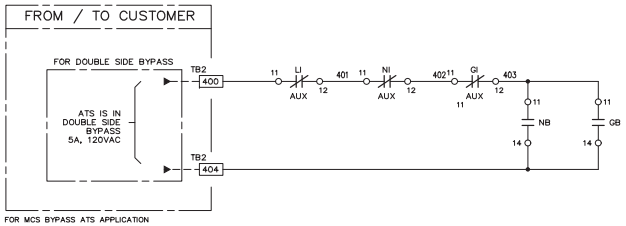


FOR MCS BYPASS ATS APPLICATION

## ☐ AUX BU OPTION

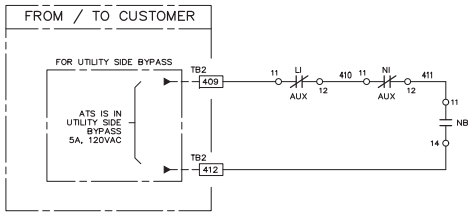


FOR MCS BYPASS ATS APPLICATION

## ☐ AUX BG OPTION

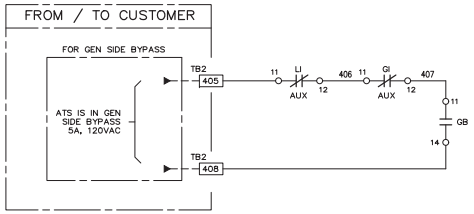


FOR MCS BYPASS ATS APPLICATION

| BILL OF MATERIALS FOR MCS DOUBLE SIDE BYPASS | | | |
|---|---|---|---|
| PART DESCRIPTION | BREAKER | PART ID | QTY |
| BREAKER, 2-AUX CONTACT, TS3 | 100-200A | 012350 | 5 |
| BREAKER, AUX CONTACT CONN., TS3 | 100-200A | 012357 | 5 |
| BREAKER, 2-AUX CONTACT, T4-6 | 250-800A | 012002 | 5 |

| BILL OF MATERIALS FOR MCS SINGLE SIDE BYPASS | | | |
|---|---|---|---|
| PART DESCRIPTION | BREAKER | PART ID | QTY |
| BREAKER, 2-AUX CONTACT, TS3 | 100-200A | 012350 | 3 |
| BREAKER, AUX CONTACT CONN., TS3 | 100-200A | 012357 | 3 |
| BREAKER, 2-AUX CONTACT, T4-6 | 250-800A | 012002 | 3 |

## ☐ AUX BU OPTION (ICS BYPASS – FIXED)

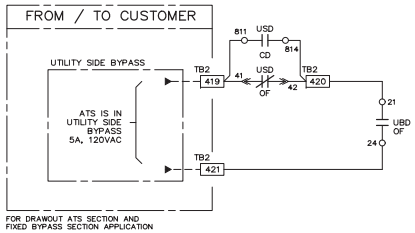


FOR DRAWOUT ATS SECTION AND FIXED BYPASS SECTION APPLICATION

## ☐ AUX BG OPTION (ICS BYPASS – FIXED)

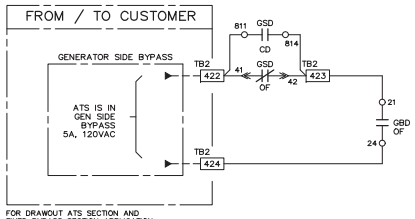


FOR DRAWOUT ATS SECTION AND FIXED BYPASS SECTION APPLICATION

## ☐ AUX BU OPTION (ICS BYPASS – DRAWOUT)

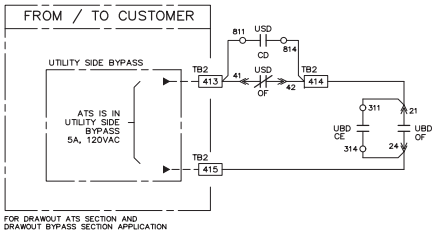


FOR DRAWOUT ATS SECTION AND DRAWOUT BYPASS SECTION APPLICATION

## ☐ AUX BG OPTION (ICS BYPASS – DRAWOUT)

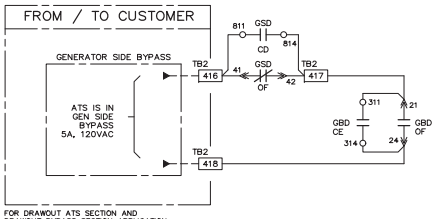


FOR DRAWOUT ATS SECTION AND DRAWOUT BYPASS SECTION APPLICATION

| GENERAL NOTES | |
|---|---|
| 1 | GEN SIDE / UTILITY SIDE / DOUBLE SIDE BYPASS AUX OPTION FOR MCS ATS TYPE IS PROVIDED AS PER OPTION LIST |
| 2 | FOR MCS BYPASS, USE SUITABLE PART ID FOR AUX CONTACT BASED ON THE AMPERAGE RATING AS MENTIONED IN BILL OF MATERIAL |
| 3 | FOR MCS TS3 FRAME, USE AUX CONTACT AND ITS CONNECTION AS MENTIONED IN BILL OF MATERIAL. FOR T4-T6 FRAME, AUX. CONNECTION INCLUDED IN AUX CONTACT PART ID |
| 4 | FIXED / DRAW OUT BYPASS AUX OPTION FOR ICS ATS TYPE IS PROVIDED AS PER OPTION LIST |
| 5 | ICS ATS & BYPASS CONTACTS UTILIZED FROM EXISTING 4A-4B AUX CONTACTS WHICH ARE ORDERED WITHIN THE BREAKER |
| 6 | REFER COVER PAGE / SELECTED OPTION LIST FOR PROJECT SPECIFIC DETAILS |

FOR REVIEW ONLY

☐ APPROVED FOR CONSTRUCTION
☐ MASTER COPY ☐ REFERENCE COPY ____ OF ____
☐ MULTIPLE UNIT WORK ORDER
☐ RELEASED FOR INFORMATION
AUTH. BY: _____ DATE: _____

CROSS REFERENCE LEGEND
SOC-C-1
GRID COORDINATE
SHEET No.

DRAWING No. | REFERENCE DRAWINGS

| No. | REVISIONS | BY | AUTH | DATE |
|---|---|---|---|---|
| 3 | GENERAL NOTES AND LOGO UPDATED | AP | OG | 17-10-24 |
| 2 | MOUNTING INSTRUCTION UPDATED | SK | OG | 16-09-21 |
| 1 | WIRE HARNESS UPDATED AS PER ECR-0114744 | AP | OG | 16-07-22 |

THOMSON™ POWER SYSTEMS

AUTOMATIC TRANSFER SWITCH
MODEL TS 870 / 880
STANDARD OPTION SCHEMATIC – BYPASS AUX
ATS BYPASSED OPTION

DRAWINGS AND OR OTHER TECHNICAL INFORMATION SUPPLIED BY THOMSON POWER SYSTEMS AS A PART OF A SALE OF EQUIPMENT ARE FOR THE PURCHASER'S USE SOLELY IN CONJUNCTION WITH THAT EQUIPMENT, UNLESS SPECIFICALLY AGREED TO OTHERWISE AS A PART OF THE TERMS OF SALE.

| | | | |
|---|---|---|---|
| CUSTOMER | THOMSON POWER SYSTEMS | | |
| CUSTOMER ORDER No. | C-XXXXXX | WORK ORDER No. | W-XXXXXX |
| DRAWN BY | AP | AUTH BY | OG |
| DATE | 16-01-26 | REV | 3 |
| DRAWING/FILE No. | TSC900E352 | SHEET | 30M |

© THE INFORMATION ON THIS DRAWING IS THE PROPERTY OF THOMSON POWER SYSTEMS. IT IS NOT TO BE USED DETRIMENTALLY TO OUR INTERESTS.

**Date: July 26, 2018**

REVIEWED BY CONTRACTOR
Kudlik Construction Ltd.
NAME: Sandra Rousseau P.Eng
DATE: Jul 26, 2018

# Transmittal

**Arctic Electrical Nunavut Ltd**
PO Box 1381
Iqaluit, Nu.
X0A 0H0
Phone: 867-975-3494
**From: Lee Pitcher**



SE-07R1 (ELE-007)
PO-P18-120 Frontier

**Project** **Waste Wate Treatment Plant**
**Location** Iqaluit NU
**To** Kudlik Construction
Contact: Sandra Rousseau P.Eng.
srousseau@kudlik.biz

Attached are the following items:

- [x] Drawings
- [ ] Prints
- [ ] Plans
- [x] Specifications
- [ ] Information
- [ ] Submittals

Other:

THESE ARE TRANSMITTED FOR:

- [ ] Prior Approval
- [ ] Approval
- [ ] Approval as Submitted
- [ ] Approval as Noted
- [X] Resubmittal for Approval
- [ ] Corrections
- [ ] Your Use
- [ ] Review and Comment
- [ ] Record

Bids due on:
Other:

| Qty | Type | MFG | Part |
|---|---|---|---|

Drawing E-601-Load Bank

STANTEC PROJECT #: 110126045
This review by Stantec is for general conformance with the design concept of Stantec's design of the:
- [ ] Architectural
- [ ] Structural
- [ ] Mechanical
- [x] Electrical
- [ ] Other

component(s) only and does not mean that Stantec has verified or approves the shop drawing(s). The Contractor remains solely responsible for the shop drawing(s) and this review by Stantec does not relieve the Contractor of the Contractor's responsibility for errors or omissions in the shop drawing(s) or for meeting all requirements of the contract documents. This review does not mean that Stantec approves the detailed design inherent in the shop drawing, responsibility for which shall remain with the Contractor submitting same, nor does this review mean that Stantec accepts any deviation of the shop drawing(s) from the contract documents. The Contractor is responsible for confirming all dimensions and correlating them at the job site, for all construction means, methods and techniques, and for coordination of construction work of all trades, including coordination of all shop drawings.

SUBMITTAL # ELE-07R1

Stantec

- [ ] REVIEWED
- [x] REVIEWED, AS NOTED
- [ ] REVISE AND RESUBMIT
- [ ] NOT REVIEWED

DATE 2018-07-30
BY Konrad Goluch

Power bank shall have exterior emergency power off switch on enclosure as spec 26 32 14 2.7 .5

**Notes:**
Please review the attached approval drawings carefully. Production cannot be scheduled until a signed copy of the final approved drawing are received. Be aware that once drawings are approved, any errors due to incorrect information are the responsibility of the contractor.

Do not hesitate to contact me if you have any questions or concerns.

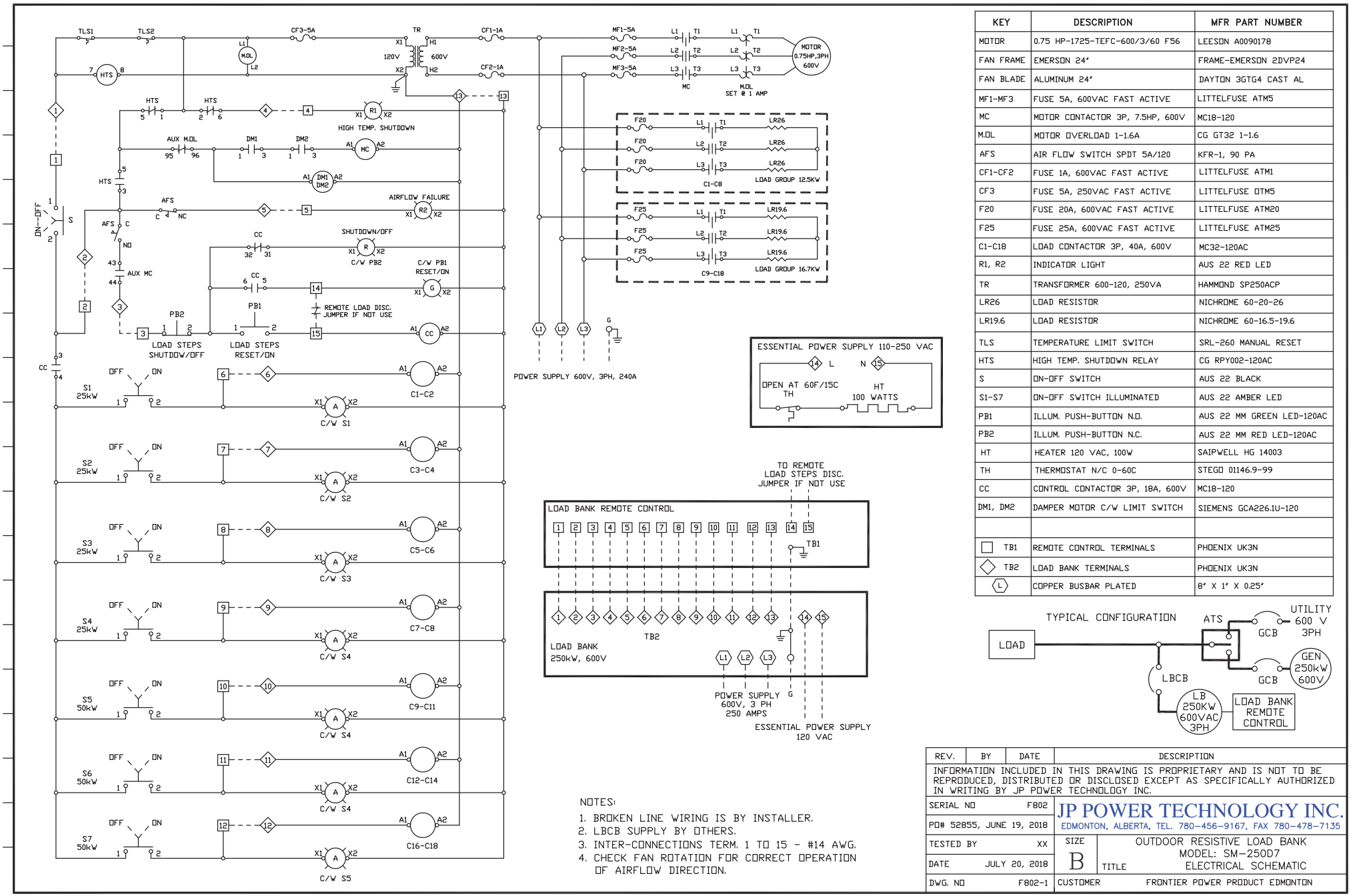


| KEY | DESCRIPTION | MFR PART NUMBER |
|---|---|---|
| MOTOR | 0.75 HP-1725-TEFC-600/3/60 F56 | LEESON A0090178 |
| FAN FRAME | EMERSON 24" | FRAME-EMERSON 2DVP24 |
| FAN BLADE | ALUMINUM 24" | DAYTON 3GTG4 CAST AL |
| MF1-MF3 | FUSE 5A, 600VAC FAST ACTIVE | LITTELFUSE ATM5 |
| MC | MOTOR CONTACTOR 3P, 7.5HP, 600V | MC18-120 |
| M.OL | MOTOR OVERLOAD 1-1.6A | CG GT32 1-1.6 |
| AFS | AIR FLOW SWITCH SPDT 5A/120 | KFR-1, 90 PA |
| CF1-CF2 | FUSE 1A, 600VAC FAST ACTIVE | LITTELFUSE ATM1 |
| CF3 | FUSE 5A, 250VAC FAST ACTIVE | LITTELFUSE OTM5 |
| F20 | FUSE 20A, 600VAC FAST ACTIVE | LITTELFUSE ATM20 |
| F25 | FUSE 25A, 600VAC FAST ACTIVE | LITTELFUSE ATM25 |
| C1-C18 | LOAD CONTACTOR 3P, 40A, 600V | MC32-120AC |
| R1, R2 | INDICATOR LIGHT | AUS 22 RED LED |
| TR | TRANSFORMER 600-120, 250VA | HAMMOND SP250ACP |
| LR26 | LOAD RESISTOR | NICHROME 60-20-26 |
| LR19.6 | LOAD RESISTOR | NICHROME 60-16.5-19.6 |
| TLS | TEMPERATURE LIMIT SWITCH | SRL-260 MANUAL RESET |
| HTS | HIGH TEMP. SHUTDOWN RELAY | CG RPY002-120AC |
| S | ON-OFF SWITCH | AUS 22 BLACK |
| S1-S7 | ON-OFF SWITCH ILLUMINATED | AUS 22 AMBER LED |
| PB1 | ILLUM. PUSH-BUTTON N.O. | AUS 22 MM GREEN LED-120AC |
| PB2 | ILLUM. PUSH-BUTTON N.C. | AUS 22 MM RED LED-120AC |
| HT | HEATER 120 VAC, 100W | SAIPWELL HG 14003 |
| TH | THERMOSTAT N/C 0-60C | STEGO 01146.9-99 |
| CC | CONTROL CONTACTOR 3P, 18A, 600V | MC18-120 |
| DM1, DM2 | DAMPER MOTOR C/W LIMIT SWITCH | SIEMENS GCA226.1U-120 |
| | | |
| □ TB1 | REMOTE CONTROL TERMINALS | PHOENIX UK3N |
| ◇ TB2 | LOAD BANK TERMINALS | PHOENIX UK3N |
| (L) | COPPER BUSBAR PLATED | 8" X 1" X 0.25" |




NOTES:

1. BROKEN LINE WIRING IS BY INSTALLER.
2. LBCB SUPPLY BY OTHERS.
3. INTER-CONNECTIONS TERM. 1 TO 15 - #14 AWG.
4. CHECK FAN ROTATION FOR CORRECT OPERATION OF AIRFLOW DIRECTION.

| REV. | BY | DATE | DESCRIPTION |
|---|---|---|---|

INFORMATION INCLUDED IN THIS DRAWING IS PROPRIETARY AND IS NOT TO BE REPRODUCED, DISTRIBUTED OR DISCLOSED EXCEPT AS SPECIFICALLY AUTHORIZED IN WRITING BY JP POWER TECHNOLOGY INC.

| | |
|---|---|
| SERIAL NO | F802 |
| PO# 52855, JUNE 19, 2018 | |
| TESTED BY | XX |
| DATE | JULY 20, 2018 |
| DWG. NO | F802-1 |

JP POWER TECHNOLOGY INC.
EDMONTON, ALBERTA, TEL. 780-456-9167, FAX 780-478-7135

SIZE B

TITLE: OUTDOOR RESISTIVE LOAD BANK MODEL: SM-250D7 ELECTRICAL SCHEMATIC

CUSTOMER: FRONTIER POWER PRODUCT EDMONTON

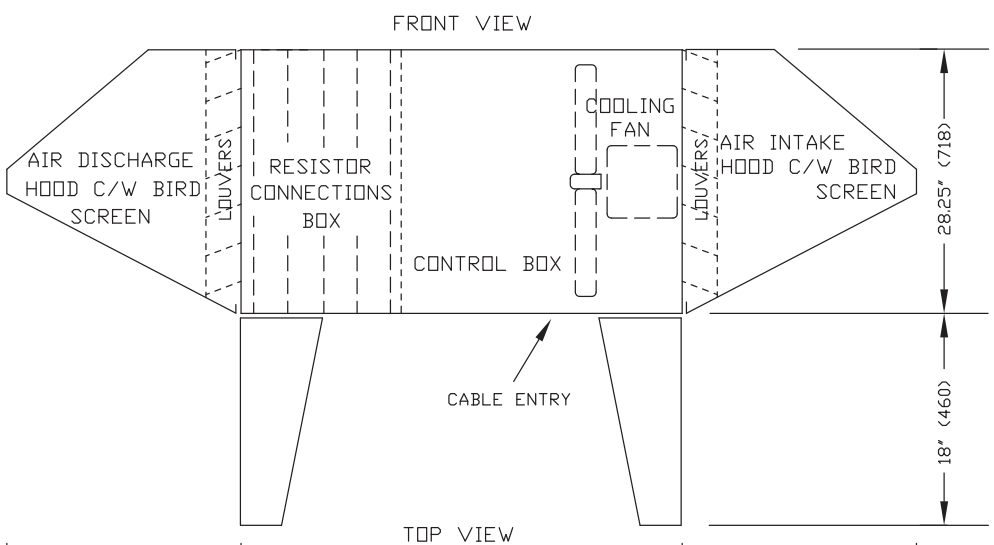


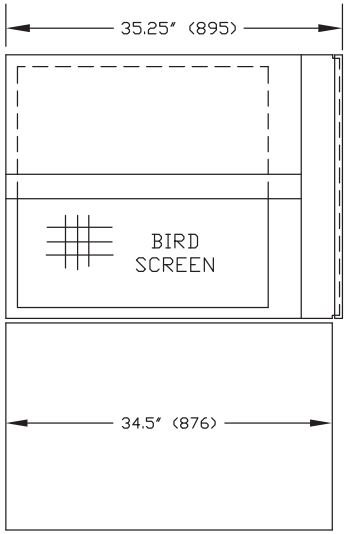


SIDE VIEW

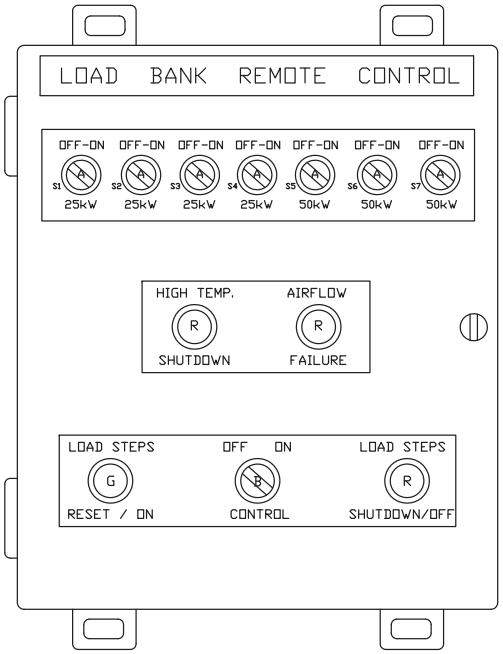


REMOTE CONTROL
H-14" (356), W-12" (305), H-6 (152)

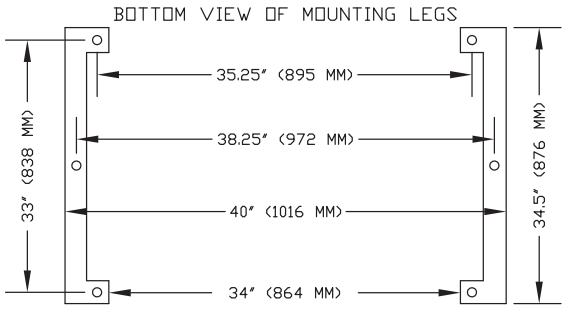


NOTES:

1. ALL DIMENSIONS ARE SHOWN IN INCHES (MILLIMETERS)
2. WEIGHT-300 LBs, 136 KG
3. MAXIMUM AIR INLET TEMPERATURE IS 100F, 38C
4. MINIMUM CLEARANCE FOR AIR DISCHARGE-24 FT (7.3 MT)
5. REMOTE CONTROL PANEL- CEMA 1, GRAY 61 POWDER COAT PAINT
6. LOAD BANK ENCLOSURE- CEMA 3, 304 SS. GA18, NATURAL FINISH.

| REV. | BY | DATE | DESCRIPTION |
|---|---|---|---|

INFORMATION INCLUDED IN THIS DRAWING IS PROPRIETARY AND IS NOT TO BE REPRODUCED, DISTRIBUTED OR DISCLOSED EXCEPT AS SPECIFICALLY AUTHORIZED IN WRITING BY JP POWER TECHNOLOGY INC.

| | |
|---|---|
| SERIAL NO | F802 |
| PO# 52855, JUNE 19, 2018 | |
| TESTED BY | XX |
| DATE | JULY 20, 2018 |
| DWG. NO | F802-2 |

JP POWER TECHNOLOGY INC.
EDMONTON, ALBERTA, TEL. 780-456-9167, FAX 780-478-7135

SIZE B

TITLE: OUTDOOR RESISTIVE LOAD BANK
MODEL: SM-250D7
ENCLOSURE LAYOUT

CUSTOMER: FRONTIER POWER PRODUCT EDMONTON

**Date: Jul 5, 2018**

REVIEWED BY CONTRACTOR
Kudlik Construction Ltd.
NAME: Sandra Rousseau P.Eng
DATE: Jul 05, 2018

# Transmittal

**Arctic Electrical Nunavut Ltd**
PO Box 1381
Iqaluit, Nu.
X0A 0H0
Phone: 867-975-3494
**From: Lee Pitcher**



**Project** **Waste Wate Treatment Plant**
**Location** Iqaluit NU
**To** Kudlik Construction
Contact: Sandra Rousseau P.Eng.
srousseau@kudlik.biz

SE-08
PO-P18-123

Attached are the following items:

- [x] Drawings
- [ ] Prints
- [ ] Plans
- [x] Specifications
- [ ] Information
- [ ] Submittals

Other:

THESE ARE TRANSMITTED FOR:

- [ ] Prior Approval
- [x] Approval
- [ ] Approval as Submitted
- [ ] Approval as Noted
- [ ] Resubmittal for Approval
- [ ] Corrections
- [ ] Your Use
- [ ] Review and Comment
- [ ] Record

Bids due on:
Other:

| Qty | Type | MFG | Part |
|---|---|---|---|

Section 28 16 05 Intrusion Detection

Ref-ELE001R1(SE01R1) Additional Information that was not included

STANTEC PROJECT #: 110126045

SUBMITTAL # ELE-008

This review by Stantec is for general conformance with the design concept of Stantec's design of the:

- [ ] Architectural
- [ ] Structural
- [ ] Mechanical
- [ ] Electrical
- [ ] Other _____

component(s) only and does not mean that Stantec has verified or approves the shop drawing(s). The Contractor remains solely responsible for the shop drawing(s) and this review by Stantec does not relieve the Contractor of the Contractor's responsibility for errors or omissions in the shop drawing(s) or for meeting all requirements of the contract documents. This review does not mean that Stantec approves the detailed design inherent in the shop drawing, responsibility for which shall remain with the Contractor submitting same, nor does this review mean that Stantec accepts any deviation of the shop drawing(s) from the contract documents. The Contractor is responsible for confirming all dimensions and correlating them at the job site, for all construction means, methods and techniques, and for coordination of construction work of all trades, including coordination of all shop drawings.

Stantec

- [ ] REVIEWED
- [x] REVIEWED, AS NOTED
- [ ] REVISE AND RESUBMIT
- [ ] NOT REVIEWED

DATE 2018-07-10

BY Konrad Goluch

See comments on ELE-001-R1

**Notes:**
Please review the attached approval drawings carefully. Production cannot be scheduled until a signed copy of the final approved drawing are received. Be aware that once drawings are approved, any errors due to incorrect information are the responsibility of the client.

Responsibility lies with the Contractor, not the Client.

Do not hesitate to contact me if you have any questions or concerns.

# B520 Auxiliary Power Supply Module

www.boschsecurity.com

BOSCH
Invented for life

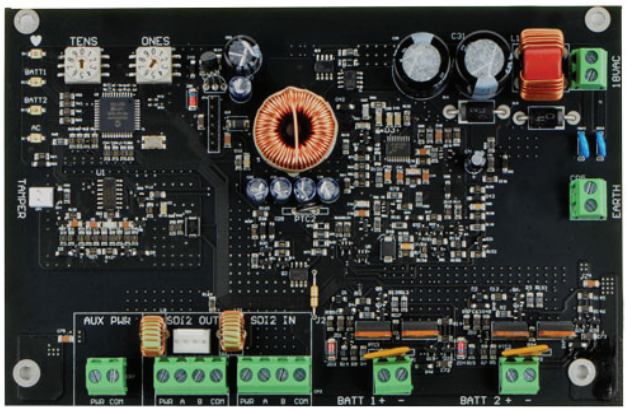


- Provides up to 2A of 12V standby current for Fire or Burglar Applications (4A of Burglary alarm current)
- Supervises up to two 12v 7-18Ah batteries independently for up to 36AH of capacity
- Provides up to 80 hours of standby time
- Uses the Bosch standard TR1850 plug-in transformer
- Easy to read rotary switch addressing

The B520 Auxiliary Power Supply Module is a fully supervised, addressable SDI2 bus device that provides an integrated auxiliary power supply solution for Bosch control panels.

## System overview

The B520 Auxiliary Power Supply Module is an auxiliary power supply expansion device that connects to compatible control panels through the SDI2 bus. This module is supervised and communicates back to the control panel all status changes.
Industrial, commercial, and institutional facilities are typical installations for the B520 module. The B520 rotary switches allow for ease of use in device addressing. The SDI2 Out terminals provide auxiliary power for SDI2 expansion devices such as keypads. The AUX PWR terminals provides added auxiliary power capabilities for additional devices such as PIR's.

## Functions

**Supervision Monitoring**
The module monitors and communicates status information over the SDI2 bus for the following:

- Operation (Heartbeat)
- Battery 1 (BATT 1)
- Battery 2 (BATT 2)
- AC input power (AC)
- Battery OK
- Low Battery
- Missing Battery

**Indicators**

- Heartbeat [icon]: Blue LED flashing On and Off when system is operating normally. A steady On or Off LED indicates a system error. Triple flash indicates communication failure.
- BATT 1 LED: Green steady On LED indicates the battery status of BATT 1 is operating normally. Flashing indicates low battery. Triple flash indicates battery charger failure. Off LED indicates a missing battery.
- BATT 2 LED: Green steady On LED indicates the battery status of BATT 2 is operating normally. Flashing indicates low battery. Triple flash indicates battery charger failure. Off LED indicates a missing battery.
- AC LED: Green steady On LED indicates the AC power is operational. A pulsating LED (3 pulses per sec.) occurs when a battery test is being performed. Flashing indicates low or failed AC.

**Battery Charging**
Fully charged batteries, connected to the battery terminals, sustain power to the B520 in the event that the AC power fails.

If AC power fails (is absent, or low) on the B520, the B520 automatically switches from primary power (AC) to secondary power (battery). When AC power is present, the B520 performs periodic battery tests to ensure battery life and usability.

## Certifications and approvals

| Region | |
|---|---|
| US | UL 365 – Police Station Connected Burglar Alarm Units and Systems |
| | UL 609 – Local Burglar Alarm Units and Systems |
| | UL 636 – Holdup Alarm Units and Systems |
| | UL 864 – Control Units and Accessories for Fire Alarm Systems |
| | UL 985 – Household Fire Warning System Units |
| | UL 1023 – Household Burglar Alarm System Units |
| | UL 1076 – Proprietary Burglar Alarm Units and Systems |
| | UL 1610 – Central Station Burglar Alarm Units |
| | FCC Part 15 Class B |
| Canada | CAN/ULC S303 – Local Burglar Alarm Units and Systems |
| | CAN/ULC S304 – Signal Receiving Centre and Premise Alarm Control Units |
| | ULC-ORD C1023 – Household Burglar Alarm System Units |
| | ULC-ORD C1076 – Propriety Burglar Alarm Units and Systems |
| | ICES-003 – Digital Apparatus |

| Region | Certification | |
|---|---|---|
| USA | UL | 20121010-S5579 |
| | CSFM | see our website |

## Installation/configuration notes

### Mounting Considerations

You can mount the B520 Auxiliary Power Supply Module in a variety of enclosures for optimal situations.

Mounting in the D8103 requires the addition on the B12 Mounting plate.

The D8103 enclosure supports up to two 12V, 18Ah batteries. The B10 supports either one 12V, 18Ah or up to two 12V, 7Ah batteries.

### Wiring Considerations

The B520 connects to a control panel using the SDI2 IN connections (PWR, A, B, COM). Use 12 AWG to 22 AWG (1.5 mm to 0.6 mm) wires from the power supply to the control panel.

The B520 provides auxiliary power to expansion modules via the SDI2 OUT (PWR, A, B, COM), or AUX Power (AUX PWR) connections using the screw terminal strip, or by using the interconnect wiring connection. Use 12 AWG to 22 AWG (1.5 mm to 0.6 mm) wires from the module to the SDI2 expansion module(s).

## Parts included

| Quantity | Component |
|---|---|
| 1 | B520 Auxiliary Power Supply module |
| 1 | Hardware pack |
| 1 | Literature pack |

**B520 Kit, B10 Enclosure**

Kit contents include:

- B520 Aux Power Supply
- TR1850 transformer
- B10 white enclosure

Order number: **B520-B**

**B520 Kit, D8103 Enclosure**

Kit contents include:

- B520 Aux Power Supply
- TR1850 transformer
- B12 mounting plate
- D8103 gray, steel enclosure

Order number: **B520-C**

## Technical specifications

### Properties

| | |
|---|---|
| Board Dimensions | 11.43 cm x 17.62 cm x 2.9 cm (4.5 in x 6.94 in x 1.15 in) |
| Maximum Distance – Wire Size | 305 m (1000 ft) - 0.65 mm (22 AWG)<br>305 m (1000 ft) – 2 mm (18 AWG)<br>Unshielded wire only |
| Compatibility | GV4 Series control panels (Up to 8 B520 Auxiliary Power Supply Modules per control panel)<br>D8103 Enclosure<br>B10 Large Control Panel Enclosure<br>B12 Mounting Plate for the D8103 Enclosure<br>D8108A Attack Enclosure<br>D2203 Enclosure<br>BATB-40 Enclosure<br>AE1, AE2 Enclosures<br>D8004 Transformer Enclosure* |
| B501-10 | Interconnect cables (10 per pack) |

*The D8004 Transformer Enclosure is required when the B520 and TR1850 (18 VAC, 50 VA) Transformer are used in UL 864 Fire, or Combination Burg and Fire applications.

### Power Input

| | |
|---|---|
| Transformer Power Supply | TR1850 (18 VAC, 50 VA)<br>TR1850-CA (18 VAC, 50 VA) for Canada |

### Power Output

| | |
|---|---|
| Current Available (Maximum) | 2.0 A SDI2 Out and AUX Power (Combined) (up to 4.0 A of alarm current for Burglar Applications) |
| Current Reserved for Charging Batteries | 150 mA |
| Current Drawn from the Panel | 15 mA |
| Voltage (rated range) | 11.5 to 12.2 VDC (special application) |
| Battery Configuration | Supports two*, separate 12 V sealed lead acid batteries (7-18 Ah) for up to 36 amp.<br><br>*Battery 1 is required for normal operations. Battery 2 is optional. |

### Enclosure Battery Considerations

| | |
|---|---|
| D8103 | Holds up to two 18 Ah, or two 7 Ah batteries |
| B10 | Holds up to one 18 Ah, or two 7 Ah batteries |

### Environmental Considerations

| | |
|---|---|
| Operating Temperature | +32° to +120° F (0° to +49°C) |
| Storage Temperature | -4° to 140° F (-20° to +60° C) |
| Relative Humidity | 5% to 93% at +32° (+90°F) non-condensing |
| Use | Intended for indoor use. |

## Ordering information

**B520 Auxiliary Power Supply Module**
Provides auxiliary power to 12VDC devices or to SDI2 modules.
Order number **B520**

**Accessories**

**B10 Medium Control Panel Enclosure**
White, steel enclosure. Accepts an optional lock and tamper switch. Measures 35.6 cm x 31.8 cm x 7.6 cm (14 in x 12.5 in x 3 in).
Order number **B10**

**D2203 Enclosure**
Gray steel enclosure. Accepts an optional lock and tamper switch. Measures 35.6 cm x 31.8 cm x 7.6 cm (14 in x 12.5 in x 3 in).
Order number **D2203**

**D8103 Enclosure**
Grey steel enclosure measuring 41 cm x 41 cm x 9 cm (16 in. x 16 in. x 3.5 in.).
Order number **D8103**

**D8108A Attack Resistant Enclosure**
Grey steel enclosure measuring 41 cm x 41 cm x 9 cm (16 in. x 16 in. x 3.5 in.). UL Listed. Includes lock and key set. B520, B4512, and B5512 require the B12 mounting plate.
Order number **D8108A**

**AE1 Standard Enclosure (Gray)**
Standard gray enclosure with keyed lock. Measures 35.6 cm x 31.8 cm x 7.6 cm (14 in x 12.5 in x 3 in).
Order number **AE1**

**AE2 Standard Enclosure (Red)**
Standard red enclosure with keyed lock. Measures 35.6 cm x 31.8 cm x 7.6 cm (14 in. x 12.5 in. x 3 in.).
Order number **AE2**

**D8004 Transformer Enclosure**
For applications such as fire alarm that might require a transformer enclosure.
Order number **D8004**

**B12 Mounting Plate for D8103 Enclosure**
Required for mounting select control panels and other devices in D8103, D8108A, D8109, or BATB Battery Box enclosures.
Order number **B12**

**TR1850 Transformer**
For use in North America. Plug-in transformer with input: 120 VAC, 60 Hz, 0.50 A; output 18 VAC, 50 VA output.
Order number **TR1850**

**D101 Lock and Key Set**
Short-body lock set with one key supplied. Uses the D102 (#1358) replacement key.
Order number **D101**

**ICP-EZTS Dual Tamper Switch**
Combination tamper switch with a wire loop for additional tamper outputs.
Order number **ICP-EZTS**

**BATB-40 Battery Box\Enclosure**
The BATB-40 Battery Box holds two dry or wet cell batteries. The box can be used with fire alarm systems or intrusion systems.
Order number **BATB-40**

**B520 Kit, B10 Enclosure**
B520 Auxiliary Power Supply kit. Includes a TR1850 transformer and a B10 White, steel enclosure.
Order number **B520-B**

**B520 Kit, D8103 Enclosure**
B520 Auxiliary Power Supply kit. Includes a TR1850 transformer, a B12 mounting plate, and a D8103 Gray, steel enclosure.
Order number **B520-C**

**Represented by:**

**Americas:**
Bosch Security Systems, Inc.
130 Perinton Parkway
Fairport, New York, 14450, USA
Phone: +1 800 289 0096
Fax: +1 585 223 9180
security.sales@us.bosch.com
www.boschsecurity.us

**Europe, Middle East, Africa:**
Bosch Security Systems B.V.
P.O. Box 80002
5617 BA Eindhoven, The Netherlands
Phone: + 31 40 2577 284
Fax: +31 40 2577 330
emea.securitysystems@bosch.com
www.boschsecurity.com

**Asia-Pacific:**
Robert Bosch (SEA) Pte Ltd, Security Systems
11 Bishan Street 21
Singapore 573943
Phone: +65 6571 2808
Fax: +65 6571 2699
apr.securitysystems@bosch.com
www.boschsecurity.asia

**China:**
Bosch (Shanghai) Security Systems Ltd.
201 Building, No. 333 Fuquan Road North IBP
Changning District, Shanghai
200335 China
Phone +86 21 22181111
Fax: +86 21 22182398
www.boschsecurity.com.cn

**America Latina:**
Robert Bosch Ltda Security Systems Division
Via Anhanguera, Km 98
CEP 13065-900
Campinas, Sao Paulo, Brazil
Phone: +55 19 2103 2860
Fax: +55 19 2103 2862
latam.boschsecurity@bosch.com
www.boschsecurity.com

© Bosch Security Systems 2014 | Data subject to change without notice
2536892171 | en, V6, 04. Nov 2014

**Date: July 23, 2018**

REVIEWED BY CONTRACTOR
Kudlik Construction Ltd.
NAME: Sandra Rousseau P.Eng
DATE: Jul 23, 2018

# Transmittal

**Arctic Electrical Nunavut Ltd**
PO Box 1381
Iqaluit, Nu.
X0A 0H0
Phone: 867-975-3494
**From: Lee Pitcher**

**Project** **Waste Wate Treatment Plant**
**Location** Iqaluit NU
**To** Kudlik Construction
Contact: Sandra Rousseau P.Eng.
srousseau@kudlik.biz



SE-09R1 (ELE009)
PO-P18-152

Attached are the following items:

- [x] Drawings
- [ ] Prints
- [ ] Plans
- [x] Specifications
- [ ] Information
- [ ] Submittals
- Other:

THESE ARE TRANSMITTED FOR:

- [ ] Prior Approval
- [ ] Approval
- [ ] Approval as Submitted
- [ ] Approval as Noted
- [X] Resubmittal for Approval
- [ ] Corrections
- [ ] Your Use
- [ ] Review and Comment
- [ ] Record
- Bids due on:
- Other:

| Qty | Type | MFG | Part |
|---|---|---|---|

Section 26 52 01 Unit Equipment for Emergency Lighting

Section 26 53 00 Exit Signs

STANTEC PROJECT #: 110126045

SUBMITTAL # ELE-009-R1

This review by Stantec is for general conformance with the design concept of Stantec's design of the:

- [ ] Architectural
- [ ] Structural
- [ ] Mechanical
- [x] Electrical
- [ ] Other

component(s) only and does not mean that Stantec has verified or approves the shop drawing(s). The Contractor remains solely responsible for the shop drawing(s) and this review by Stantec does not relieve the Contractor of the Contractor's responsibility for errors or omissions in the shop drawing(s) or for meeting all requirements of the contract documents. This review does not mean that Stantec approves the detailed design inherent in the shop drawing, responsibility for which shall remain with the Contractor submitting same, nor does this review mean that Stantec accepts any deviation of the shop drawing(s) from the contract documents. The Contractor is responsible for confirming all dimensions and correlating them at the job site, for all construction means, methods and techniques, and for coordination of construction work of all trades, including coordination of all shop drawings.

Stantec

- [ ] REVIEWED
- [x] REVIEWED, AS NOTED
- [ ] REVISE AND RESUBMIT
- [ ] NOT REVIEWED

DATE 2018-07-30

BY Konrad Goluch

**Notes:**
Please review the attached approval drawings carefully. Production cannot be scheduled until a signed copy of the final approved drawing are received. Be aware that once drawings are approved, any errors due to incorrect information are the responsibility of the Contractor.

Do not hesitate to contact me if you have any questions or concerns.

WSA LIGHT ENERGY DESIGN LTD
101-5420 CANOTEK RD
OTTAWA, ON K1J 1E9
Phone: 613-745-0001
Fax: 613-745-0002
Contact: Strachan, Hayden

# Iqaluit WWTP

18-21616-1

7/19/2018

Project 18-21616-1
Iqualuit WWTP

Submitted By
WSA LIGHT ENERGY DESIGN LTD

| Type | Manufacturer/Brand | Catalog Number |
|---|---|---|
| DRH-XP | Aimlite | RMHZ-2112-24V6WLA/MR16/CM |
| BP1+2 | Aimlite | EBHZ-2414411CD-2Z16WLA |
| EX-XP | Aimlite | RPZN21GRY |
| DRH | Aimlite | RMMD2-12-24V6WLA |
| BP# 3,5,6,7 | Aimlite | EBST24144-2MD5WLA-WHT-ATD/AMP-VLT |
| BP #4 | Aimlite | EBST24350-2MD5WLA-WHT-ATD/AMP-VLT |
| EX | Aimlite | RPSTUMWHT-UNVDC |

| | | | |
|---|---|---|---|
| WSA LIGHT ▪ ENERGY ▪ DESIGN | Project 18-21616-1<br>Iqualuit WWTP<br><br>Submitted By<br>WSA LIGHT ENERGY DESIGN LTD | Catalog Number<br>RMHZ-2112-24V6WLA/MR16/CM<br><br>Notes<br>8-10 weeks | Type<br>DRH-XP |

# RMHZ

## Hazardous location remote fixture

6, 12 or 24VDC Models

Wall, Ceiling or Pendant Mount

Project: _____

Type: _____

Catalogue #: _____

Drawn by: _____

Date: _____

Designed to meet the strictest Codes, the RMHZ series of hazardous location remote fixtures provides safe and dependable operation. The RMHZ series housings are built with die cast, copper free aluminum, in a variety of Class and Division rated models. Available as 6V, 12V or 24V models with wall, ceiling or pendant mounted configuration.



## FEATURES AND SPECIFICATIONS

### CIRCUITRY - AC & AC/DC

- Single or double internal MR11 or MR16 lamp assemblies
- Quartz-halogen or LED lamps

### MECHANICAL

- Die cast, copper free aluminum, grey finish
- Heavy-duty Pyrex glass lens
- Internal MR11 or MR16 lamp assembly is fully adjustable
- Wall, ceiling or pendant mounting (as specified)
- Wiring pre-pulled through fixture
- Wall and ceiling models c/w integrated die cast junction box
- Junction box c/w oversized integral mounting holes and tapped and plugged rigid holes
- Temperature code: T6

### APPROVALS

- CSA Certified to C22.2 #137
- CSA Certified to C22.2 #141-15
- Class I, Division 1, Groups C & D
- Class I, Zone 1 & 2, Groups IIA & IIB

### COMPLIANCE

- Meets requirements of ICES-005

LED

HAZARDOUS LOCATION

ICES 005

## DIMENSIONS

### PENDANT MOUNT

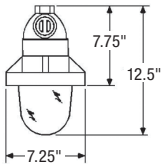


### CEILING MOUNT

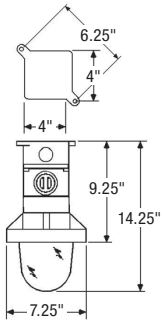


### WALL MOUNT

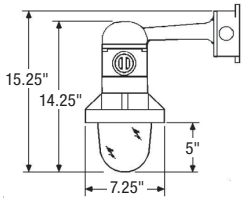


## OVERVIEW

| | |
|---|---|
| **Light source** | Quartz or LED |
| **DC voltage** | 6VDC, 12VDC or 24VDC |

| | | | |
|---|---|---|---|
| WSA LIGHT ▪ ENERGY ▪ DESIGN | Project 18-21616-1<br>Iqualuit WWTP<br>Submitted By<br>WSA LIGHT ENERGY DESIGN LTD | Catalog Number<br>RMHZ-2112-24V6WLA/MR16/CM<br>Notes<br>8-10 weeks | Type<br>DRH-XP |

RMHZIII

## ORDERING GUIDE - LED

RMHZ ____ ____ — ____ ____ ____ 1 1 CD / ____

| Series | Head | Nbr of lamps | Voltage | Wattage | Lamp type | Mounting | Class | Div. | Group | Options |
|---|---|---|---|---|---|---|---|---|---|---|
| RMHZ | 1 - Single<br>2 - Double (with J-Box) | 1 - Single lamp per head<br>2 - Double lamp per head | 06-24 - 6VDC to 24VDC operational<br>12-24 - 12VDC to 24VDC operational | 4W - 4 watts<br>5W - 5 watts<br>6W - 6 watts<br>7W - 7 watts | LR - LED<br>LA - LED<br>LA - LED | C - Ceiling mount<br>P - Pendant mount<br>M - Wall mount | 1 | 1 | C<br>D | LGD - Die cast lens guard |

## ORDERING GUIDE - INCANDESCENT

RMHZ ____ ____ — ____ ____ WQ ____ 1 1 CD / ____

| Series | Head | Nbr of lamps | Voltage | Lamp | Lamp type | Mounting | Class | Div. | Group | Options |
|---|---|---|---|---|---|---|---|---|---|---|
| RMHZ | 1 - Single<br>2 - Double (with J-Box) | 1 - Single lamp per head<br>2 - Double lamp per head | 06 - 6VDC<br>12 - 12VDC<br>24 - 24VDC | See lamp selection | WQ - Quartz halogen | C - Ceiling mount<br>P - Pendant mount<br>M - Wall mount | 1 | 1 | C<br>D | LGD - Die cast lens guard |

## LAMP SELECTION

| | 6 Volts | 12 Volts | 24 Volts |
|---|---|---|---|
| MR11 • Small head | | | |
| Quartz halogen | 10WQ | 20WQ | 20WQ |

MOUNTING SHALL BE TO SUIT LOCATION

All products are subject to change or may be discontinued any time without notice.

| | | | |
|---|---|---|---|
| WSA LIGHT ▪ ENERGY ▪ DESIGN | Project 18-21616-1<br>Iqualuit WWTP<br><br>Submitted By<br>WSA LIGHT ENERGY DESIGN LTD | Catalog Number<br>EBHZ-2414411CD-2Z16WLA<br><br>Notes<br>8-10 weeks | Type<br>BP1+2 |

# EBHZ

## Hazardous location battery unit

6, 12 or 24VDC Models

120/347VAC Input

Project: _____

Type: _____

Catalogue #: _____

Drawn by: _____

Date: _____

Designed to meet the strictest codes and standards, the EBHZ series of hazardous location battery units provides safe and dependable operation. The EBHZ series housings are built with die cast, copper free aluminum, in a variety of Class and Division rated models. Available in 6, 12 and 24VDC models in a range of capacities from 36 to 320W, for 30 minutes duration.



## FEATURES AND SPECIFICATIONS

### CIRCUITRY

- Range of input voltages 120 or 347VAC
- Single or double internal MR11 or MR16 lamp assemblies
- 6VDC, 12VDC or 24VDC emergency power output versions (as specified)
- Wattage capacities from 36 to 320W
- 30 minutes emergency power duration standard
- Diagnostic/pilot LED for AC ON
- High efficiency, rapid recovery, precision control charging system
- Brownout and short circuit protection
- Temperature compensated
- Large magnum terminal screw type connectors for remote load connection
- Maintenance free, sealed lead acid battery

### MECHANICAL

- Die cast, copper free aluminum housing - grey aluminum finish
- Housing cavity accessed via large circular screw on/off cover plate
- Standard stainless steel one-way breather valve for release of gases and/or moisture condensation
- Housing c/w tapped and plugged rigid holes
- Solid state design and construction
- Oversized integral mounting holes/forks accept heavy-duty mounting hardware
- Internal MR11 or MR16 lamp assembly is fully adjustable
- Temperature code: T6

### APPROVALS

- CSA Certified to C22.2 #137
- CSA Certified to C22.2 #141-15
- Class I, Division 1, Groups C & D
- Class I, Zone 1 & 2, Groups IIA & IIB

### COMPLIANCE

- Meets requirements of ICES-005

HAZARDOUS LOCATION

ICES 005

## DIMENSIONS

### ENCLOSURE A

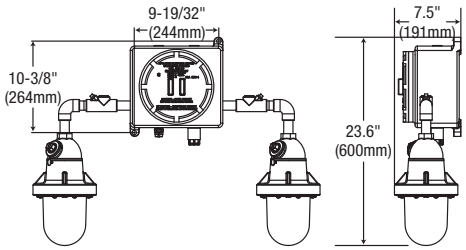


### ENCLOSURE B

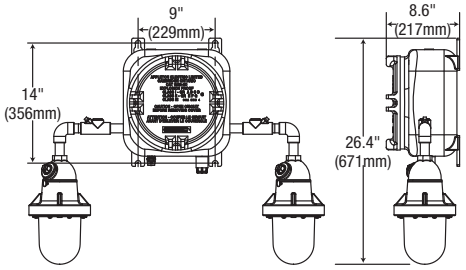


Dimensions are subject to change according to exact Class, Division & Group specifications.

## OVERVIEW

| | |
|---|---|
| **Input voltage** | 120 or 347V AC |
| **DC voltage** | 6VDC, 12VDC or 24VDC |
| **Output power** | 36W - 320W |

| | | | |
|---|---|---|---|
| WSA LIGHT ▪ ENERGY ▪ DESIGN | Project 18-21616-1<br>Iqualuit WWTP<br>Submitted By<br>WSA LIGHT ENERGY DESIGN LTD | Catalog Number<br>EBHZ-2414411CD-2Z16WLA<br>Notes<br>8-10 weeks | Type<br>BP1+2 |

EBHZIII

## ORDERING GUIDE

| EBHZ | | | 1 | 1 | CD | | — | | | |
|---|---|---|---|---|---|---|---|---|---|---|

| Series | Voltage | Wattage | Class | Div. | Group | Input voltage | Head | Lamp/Head | Lamp |
|---|---|---|---|---|---|---|---|---|---|
| EBHZ | **06 -** 6VDC<br>**12 -** 12VDC<br>**24 -** 24VDC | See model rating below | 1 | 1 | C<br>D | **Blank -** 120/347V | **1Z -** Single<br>**2Z -** Double | **1 -** Single lamp assembly<br>**2 -** Double lamp assembly | See lamp selection below<br>6WLA |

## LAMP SELECTION

| | 6 Volts | 12 Volts | 24 Volts |
|---|---|---|---|
| **MR11 • Small head** | | | |
| Quartz halogen | 10WQ | 20WQ | 20WQ |
| **MR16** | | | |
| LED | 4WLR, 5WLA | 4WLR, 5WLA, 6WLA, 7WLA | 4WLR, 5WLA, 6WLA, 7WLA |

## MODEL RATINGS

**Wattage capacities**

| Model | Enclosure | Voltage | 30 min. | 60 min. | 90 min. | 120 min. |
|---|---|---|---|---|---|---|
| **EBHZ06036** | A | 6VDC | 36 | 18 | 12 | 9 |
| **EBHZ06050** | A | 6VDC | 50 | 25 | 16 | 12 |
| **EBHZ06072** | A | 6VDC | 72 | 36 | 24 | 18 |
| **EBHZ12036** | A | 12VDC | 36 | 18 | 12 | 9 |
| **EBHZ12050** | A | 12VDC | 50 | 25 | 16 | 12 |
| **EBHZ12072** | A | 12VDC | 72 | 36 | 24 | 18 |
| **EBHZ12100** | A | 12VDC | 100 | 50 | 33 | 25 |
| **EBHZ12160** | B | 12VDC | 160 | 80 | 53 | 40 |
| **EBHZ12200** | B | 12VDC | 200 | 100 | 66 | 50 |
| **EBHZ24144** | A | 24VDC | 144 | 72 | 48 | 36 |
| **EBHZ24320** | B | 24VDC | 320 | 160 | 106 | 80 |

All products are subject to change or may be discontinued any time without notice.

| | | | |
|---|---|---|---|
| WSA LIGHT ▪ ENERGY ▪ DESIGN | Project 18-21616-1<br>Iqualuit WWTP<br><br>Submitted By<br>WSA LIGHT ENERGY DESIGN LTD | Catalog Number<br>RPZN21GRY<br><br>Notes<br>2-4 weeks | Type<br>EX-XP |

# RPZN2

## Hazardous location

AC, AC/DC & Self-Powered

Project: _____

Type: _____

Catalogue #: _____

Drawn by: _____

Date: _____

The RPZN2 series of Class I, Division II / Zone 2 rated running man are designed to perform in demanding hazardous applications. The unit maintains its sealed interior with a continuous integral gasket. As well LED pilot light and test switch are sealed type.



(self powered version)

## FEATURES AND SPECIFICATIONS

### ELECTRICAL - AC/DC

- LED ultra bright light source
- 120/347VAC Input, field selectable
- 3.6 Watt power consumption
- Emergency DC wattages as follows: **6VDC** = 1.8W **12VDC** = 1.8W **24VDC** = 1.8W

### ELECTRICAL - SELF-POWERED

- LED ultra bright light source
- 120/347VAC Input, field selectable
- 4 Watt power consumption
- High-performance, sealed Ni-Cad battery
- 90 minutes emergency duration (standard)
- Solid state transfer and battery charger

### MECHANICAL

- Heavy-duty non-metallic, reinforced construction
- One piece, molded and gasketed lens
- Bottom hinged cover secured with two screws
- One-way breather valve for release of gases and/or moisture condensation
- All external metal hardware is stainless steel
- Single face, wall mount only
- Grey finish housing, white faceplate standard

### APPROVALS

- CSA Certified to C22.2 #137
- CSA Certified to C22.2 #141-15
- CSA Certified to C860-11
- Class I, Division 2, Groups A, B, C, D
- Class I, Zone 2, Groups IIA, IIB, IIC

### COMPLIANCE

- Meets requirements of ICES-005

LED

HAZARDOUS LOCATION

ICES 005

## DIMENSIONS

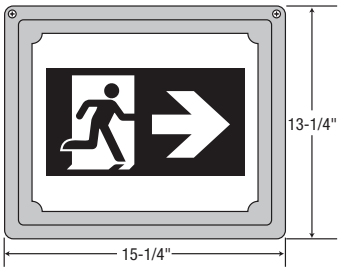


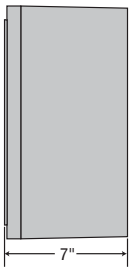




Comes standard (single face) with three pictogram legends for direction selection.

## OVERVIEW

| | |
|---|---|
| **Light source** | LED |
| **Input voltage** | 120/347V AC |
| **Input power** | 3.6W AC/DC<br>4W self-powered |
| **DC voltage** | 6VDC, 12VDC or 24VDC |
| **DC power** | 1.8W |

| | | | |
|---|---|---|---|
| WSA LIGHT ▪ ENERGY ▪ DESIGN | Project 18-21616-1<br>Iqualuit WWTP<br>Submitted By<br>WSA LIGHT ENERGY DESIGN LTD | Catalog Number<br>RPZN21GRY<br>Notes<br>2-4 weeks | Type<br>EX-XP |

# RPZN2III

## ORDERING GUIDE

| RPZN2 | 1 | GRY | — | / |
|---|---|---|---|---|

| Series | Nbr of faces | Colour | Operation | Options |
|---|---|---|---|---|
| RPZN2 | 1 - Single face | GRY - Grey | UNVDC - Universal DC backup voltage from 6 to 24VDC<br>BAT - Self-powered for 90 minutes | D U UR DR DL UL |

## TEMPERATURE CODES

| | 25°C | 40°C |
|---|---|---|
| UNVDC | T6 | T6 |
| BAT | T6 | T5 |

EXIT SIGN AS SPEC 26 53 00 2.1 .8, SELF POWERED NOT ALOWED.

## Comments

All products are subject to change or may be discontinued any time without notice.

| | | | |
|---|---|---|---|
| WSA LIGHT ▪ ENERGY ▪ DESIGN | Project 18-21616-1<br>Iqualuit WWTP<br><br>Submitted By<br>WSA LIGHT ENERGY DESIGN LTD | Catalog Number<br>RMMD2-12-24V6WLA<br><br>Notes<br>stock-2 weeks | Type<br>DRH |

# RMMD

Project:

Contractor:

## COMPACT REMOTE

MR16 Surface Mount
Single, Double or Triple
6V, 12V, & 24V Lamps



**Approvals:**
CSA Certified to C22.2 #141.15

### DESCRIPTION

The RMMD series of commercial MR16 remotes provides exceptional light output in a compact, traditional design. The die cast, all metal housing is fully adjustable with a friction lock tilt and swivel that can be locked in place with a rear mounted set screw. The canopy is designed to mount directly to typical electrical junction boxes. Available in 6V, 12V and 24V models, all utilizing low glare, MR16 quartz halogen or LED lamps.

### DIMENSIONS

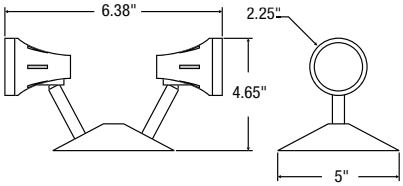


### MECHANICAL

- Die cast, solid metal housing with die cast, twist lock lamp collar
- Complete adjustablity - both tilt and swivel
- 5" diameter canopy standard
- Two canopy mounting holes designed to match standard electrical junction boxes
- White paint finish is standard, black colour is optional
- MR16 lamp designed with low glare reflector and available in 6VDC, 12VDC or 24VDC

### ORDERING GUIDE – LED

RMMD ____ — ____ ____ ____ / ____

| Series | Number of heads | Voltage | Wattage | Lamp type | Colour | Options† |
|---|---|---|---|---|---|---|
| **RMMD** | **1** - Single head<br>**2** - Double head<br>~~**3** - Triple head~~<br>**4** - Quad head (require 12" dia. canopy) | **06 - 24** - 6VDC to 24VDC operational | **4W** - 4 watts | **LR** - LED | **WHT** - White (standard)<br>~~**BLK** - Black~~ | **LCP, VDR, WRG, LXG** |
| | | | **5W** - 5 watts | **LA** - LED | | |
| | | **12 - 24** - 12VDC to 24VDC operational | **6W** - 6 watts<br>~~**7W** - 7 watts~~ | **LA** - LED | | |

### ORDERING GUIDE – INCANDESCENT

RMMD ____ — ____ ____ ____ / ____

| Series | Number of heads | Voltage | Lamp | Colour | Options† |
|---|---|---|---|---|---|
| **RMMD** | **1** - Single head<br>**2** - Double head<br>**3** - Triple head<br>**4** - Quad head (require 12" dia. canopy) | **06V** - 6VDC<br>**12V** - 12VDC<br>**24V** - 24VDC | See lamp selection chart | **WHT** - White (standard)<br>**BLK** - Black | **LCP, VDR, WRG, LXG** |

### INCANDESCENT LAMP SELECTION

| | 6 Volts | 12 Volts | 24 Volts |
|---|---|---|---|
| **MR16 - Small head** | | | |
| Quartz halogen | 08Q, 10Q, 12Q, 20Q | 08Q, 10Q, 12Q, 20Q, 35Q, 50Q | 10Q, 12Q, 20Q, 35Q, 50Q |

† For detailed options descriptions, please consult the options page.

| | | | |
|---|---|---|---|
| WSA LIGHT ▪ ENERGY ▪ DESIGN | Project 18-21616-1<br>Iqualuit WWTP<br><br>Submitted By<br>WSA LIGHT ENERGY DESIGN LTD | Catalog Number<br>EBST24144-2MD5WLA-WHT-ATD/AMP-VLT<br><br>Notes<br>(please note AUD is not included not on spec sheet?) 2-3 weeks | Type<br>BP# 3,5,6,7 |

# EBST

Project:

Contractor:

## STEEL BATTERY UNIT

6V, 12V or 24V Models
18-720W Capacity
120/347VAC Input

**Approvals:**
CSA Certified to C22.2 #141.15

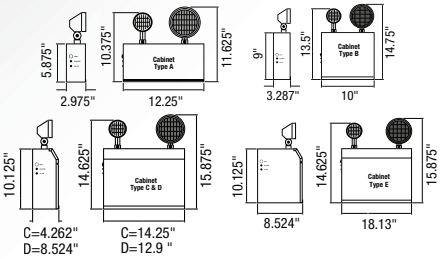




### DESCRIPTION

The EBST series of commercial steel battery units is designed to provide efficient and reliable emergency lighting. Utilizing a sturdy, all steel housing, the EBST presents a modern and unobtrusive design. On higher capacity models, the cabinet front is sloped to allow better internal access and superior low angle light distribution. The EBST series is available in 6VDC, 12VDC and 24VDC versions in a range of wattage capacities between 18 and 720W, for 30 minutes duration. Units are typically supplied with two top mounted PAR18 or PAR36 type heads, however a wide range of head type, number and placement are available including MR16 type. The EBST can also accommodate a wide variety of options, including auto-testing self-diagnostics and remote testing.

### MECHANICAL

- Rugged steel cabinet with ultraguard rust-coating
- 120VAC line cord supplied standard
- Universal spider knockout pattern and keyhole mounting slots stamped into back of cabinet
- Multiple conduit entry knockouts
- White powder coat finish standard, other finishes and Colours optional
- Lamp heads include PAR18 small style, PAR36 large style and die cast metal MR16 type
- Top head mounting is standard, side mount is optional

### CIRCUITRY

- 120/347VAC 60Hz Input, field selectable
- High efficiency, rapid recovery, precision control charging system
- 6VDC, 12VDC or 24VDC emergency power output versions (as specified)
- Wattage capacities from 18 to 720W
- 30 Minutes emergency power duration standard
- Momentary push button test switch
- Diagnostic/pilot LEDs for AC ON and CHARGE
- Fully automatic, current limited charger
- Line latched, low voltage protection
- Solid state design and construction
- Brownout and short circuit protection
- Temperature compensated
- Load connection 72W and above
- Complete battery recharge in 24 hours
- Maintenance free, sealed lead acid battery
- Optional automatic-testing, self-diagnostic charger board:
  - Continuously monitors the operational status of the battery unit
  - Automatically performs battery and lamp load testing at preset intervals
  - Indicates any component malfunctions or automated test failures

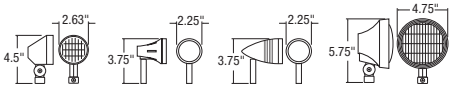


**Type SM – PAR18**
Thermoplastic
18W max.

**Type MD – MR16**
Die cast
35W max.

**Type MB – MR16**
Die cast
35W max.

**Type LG – PAR36**
Thermoplastic
70W max.

### ORDERING GUIDE

EBST ____ ____ — ____ ____ / ____

| Series | Voltage | Wattage | Head/Lamp | | Lamp | Colour | Options† |
|---|---|---|---|---|---|---|---|
| **EBST** | **06** - 6VDC<br>**12** - 12VDC<br>**24** - 24VDC | See model rating below<br>144 | **0** - No Heads<br>**1SM** - One PAR18<br>**2SM** - Two PAR18<br>**1LG** - One PAR36<br>**2LG** - Two PAR36 | **1MD** - One MR16<br>**2MD** - Two MR16<br>**1MB** - One MR16<br>**2MB** - Two MR16 | See lamp list below<br>5WLA | **WHT** - White (standard)<br>**BLK** - Black<br>**GRY** - Grey | **ATD, TDL*, LPD, BTD, VLT, AMP, ACT, DCT, FS4, RDS*, NLC, TLP, CAB, VDR, MTS, WRG, IRT, IRC** |

† For detailed options descriptions, please consult the options page. * Specify AC voltage.

### LAMP SELECTION

| | 6 Volts | 12 Volts | 24 Volts |
|---|---|---|---|
| **PAR18 - Small head or LED Lamp** | | | |
| LED | 3WLJ, 4WLJ, 5WLA | 3WLJ, 4WLJ, 5WLA, 6WLA, 7WLA | 4WLR, 5WLA, 6WLA, 7WLA |
| Quartz halogen | 08WQ, 10WQ, 12WQ | 10WQ, 12WQ | 12WQ |
| Tungsten | 09WT | 09WT, 12WT, 18WT | 09WT, 18WT |
| **MR16 - Small head c/w MR16 or LED Lamp** | | | |
| LED | 4WLR, 5WLA | 4WLR, 5WLA, 6WLA, 7WA | 4WLR, 5WLA, 6WLA, 7WLA |
| Quartz halogen | 08WQ, 10WQ, 12WQ, 20WQ | 08WQ, 10WQ, 12WQ, 20WQ, 35WQ | 10WQ, 12WQ, 20WQ |
| **PAR36 - Large head** | | | |
| Quartz halogen | 08WQ, 10WQ, 12WQ, 20WQ | 10WQ, 12WQ , 20WQ, 35WQ | 12WQ |
| Tungsten | 09WT, 18WT, 25WT | 09WT, 18WT, 25WT | 09WT, 18WT, 25WT |
| Quartz sealed beam | 08WSBQ, 10WSBQ, 12WSBQ, 20WSBQ | 08WSBQ, 12WSBQ, 35WSBQ, 55WSBQ | 70WSBQ |
| Tungsten sealed beam | 08WSBT, 09WSBT, 18WSBT | 25WSBT | N/A |

### MODEL RATINGS

| | | Wattage Capacities | | | | |
|---|---|---|---|---|---|---|
| Model | Voltage | 30 min. | 60 min. | 90 min. | 120 min. | Cabinet |
| **EBST-06018** | 6V | 18 | 9 | N/A | N/A | A |
| **EBST-06036** | 6V | 36 | 18 | 12 | 9 | A |
| **EBST-06050** | 6V | 50 | 25 | 16 | 12 | A |
| **EBST-06072** | 6V | 72 | 36 | 24 | 18 | B |
| **EBST-06100** | 6V | 100 | 50 | 33 | 25 | B |
| **EBST-06160** | 6V | 160 | 80 | 53 | 40 | C |
| **EBST-06180** | 6V | 180 | 90 | 60 | 45 | C |
| **EBST-12036** | 12V | 36 | 18 | 12 | 9 | A |
| **EBST-12050** | 12V | 50 | 25 | 16 | 12 | A |
| **EBST-12072** | 12V | 72 | 36 | 24 | 18 | A |
| **EBST-12100** | 12V | 100 | 50 | 33 | 25 | B |
| **EBST-12144** | 12V | 144 | 72 | 48 | 36 | C |
| **EBST-12160** | 12V | 160 | 80 | 53 | 40 | C |
| **EBST-12200** | 12V | 200 | 100 | 66 | 50 | C |
| **EBST-12250** | 12V | 250 | 125 | 83 | 62 | D |
| **EBST-12360** | 12V | 360 | 180 | 120 | 90 | D |
| **EBST-24144** | 24V | 144 | 72 | 48 | 36 | C |
| **EBST-24200** | 24V | 200 | 100 | 66 | 50 | C |
| **EBST-24320** | 24V | 320 | 160 | 106 | 80 | D |
| **EBST-24350** | 24V | 350 | 175 | 116 | 87 | E |
| **EBST-24550** | 24V | 550 | 275 | 183 | 137 | E |
| **EBST-24720** | 24V | 720 | 360 | 240 | 180 | E |

**NOTE:** Due to cabinet/space limitations, not all options are available for all models in any given combination. Please consult with your factory representative regarding specific options and exact cabinet dimension information.

| | | | |
|---|---|---|---|
| WSA LIGHT ▪ ENERGY ▪ DESIGN | Project 18-21616-1<br>Iqualuit WWTP<br><br>Submitted By<br>WSA LIGHT ENERGY DESIGN LTD | Catalog Number<br>EBST24350-2MD5WLA-WHT-ATD/AMP-VLT<br><br>Notes<br>(please note AUD is not included not on spec sheet?) 2-3 weeks | Type<br>BP #4 |

# EBST

Project:

Contractor:

## STEEL BATTERY UNIT

6V, 12V or 24V Models
18-720W Capacity
120/347VAC Input

**Approvals:**
CSA Certified to C22.2 #141.15

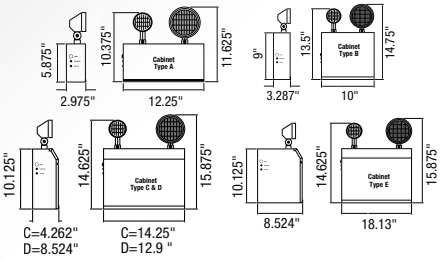




### DESCRIPTION

The EBST series of commercial steel battery units is designed to provide efficient and reliable emergency lighting. Utilizing a sturdy, all steel housing, the EBST presents a modern and unobtrusive design. On higher capacity models, the cabinet front is sloped to allow better internal access and superior low angle light distribution. The EBST series is available in 6VDC, 12VDC and 24VDC versions in a range of wattage capacities between 18 and 720W, for 30 minutes duration. Units are typically supplied with two top mounted PAR18 or PAR36 type heads, however a wide range of head type, number and placement are available including MR16 type. The EBST can also accommodate a wide variety of options, including auto-testing self-diagnostics and remote testing.

### MECHANICAL

- Rugged steel cabinet with ultraguard rust-coating
- 120VAC line cord supplied standard
- Universal spider knockout pattern and keyhole mounting slots stamped into back of cabinet
- Multiple conduit entry knockouts
- White powder coat finish standard, other finishes and Colours optional
- Lamp heads include PAR18 small style, PAR36 large style and die cast metal MR16 type
- Top head mounting is standard, side mount is optional

### CIRCUITRY

- 120/347VAC 60Hz Input, field selectable
- High efficiency, rapid recovery, precision control charging system
- 6VDC, 12VDC or 24VDC emergency power output versions (as specified)
- Wattage capacities from 18 to 720W
- 30 Minutes emergency power duration standard
- Momentary push button test switch
- Diagnostic/pilot LEDs for AC ON and CHARGE
- Fully automatic, current limited charger
- Line latched, low voltage protection
- Solid state design and construction
- Brownout and short circuit protection
- Temperature compensated
- Load connection 72W and above
- Complete battery recharge in 24 hours
- Maintenance free, sealed lead acid battery
- Optional automatic-testing, self-diagnostic charger board:
  - Continuously monitors the operational status of the battery unit
  - Automatically performs battery and lamp load testing at preset intervals
  - Indicates any component malfunctions or automated test failures

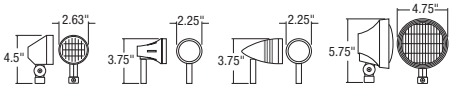


**Type SM – PAR18**
Thermoplastic
18W max.

**Type MD – MR16**
Die cast
35W max.

**Type MB – MR16**
Die cast
35W max.

**Type LG – PAR36**
Thermoplastic
70W max.

### ORDERING GUIDE

EBST — /

| Series | Voltage | Wattage | Head/Lamp | | Lamp | Colour | Options† |
|---|---|---|---|---|---|---|---|
| **EBST** | **06** - 6VDC<br>**12** - 12VDC<br>**24** - 24VDC | See model rating below<br>350 | **0** - No Heads<br>**1SM** - One PAR18<br>**2SM** - Two PAR18<br>**1LG** - One PAR36<br>**2LG** - Two PAR36 | **1MD** - One MR16<br>**2MD** - Two MR16<br>**1MB** - One MR16<br>**2MB** - Two MR16 | See lamp list below<br>5WLA | **WHT** - White (standard)<br>**BLK** - Black<br>**GRY** - Grey | **ATD, DL*, LPD, BTD, VLT, AMP, ACT, DCT, FS4, RDS*, NLC, TLP, CAB, VDR, MTS, WRG, IRT, IRC** |

† For detailed options descriptions, please consult the options page. * Specify AC voltage.

### LAMP SELECTION

| | 6 Volts | 12 Volts | 24 Volts |
|---|---|---|---|
| **PAR18 - Small head or LED Lamp** | | | |
| LED | 3WLJ, 4WLJ, 5WLA | 3WLJ, 4WLJ, 5WLA, 6WLA, 7WLA | 4WLR, 5WLA, 6WLA, 7WLA |
| Quartz halogen | 08WQ, 10WQ, 12WQ | 10WQ, 12WQ | 12WQ |
| Tungsten | 09WT | 09WT, 12WT, 18WT | 09WT, 18WT |
| **MR16 - Small head c/w MR16 or LED Lamp** | | | |
| LED | 4WLR, 5WLA | 4WLR, 5WLA, 6WLA, 7WA | 4WLR, 5WLA, 6WLA, 7WLA |
| Quartz halogen | 08WQ, 10WQ, 12WQ, 20WQ | 08WQ, 10WQ, 12WQ, 20WQ, 35WQ | 10WQ, 12WQ, 20WQ |
| **PAR36 - Large head** | | | |
| Quartz halogen | 08WQ, 10WQ, 12WQ, 20WQ | 10WQ, 12WQ , 20WQ, 35WQ | 12WQ |
| Tungsten | 09WT, 18WT, 25WT | 09WT, 18WT, 25WT | 09WT, 18WT, 25WT |
| Quartz sealed beam | 08WSBQ, 10WSBQ, 12WSBQ, 20WSBQ | 08WSBQ, 12WSBQ, 35WSBQ, 55WSBQ | 70WSBQ |
| Tungsten sealed beam | 08WSBT, 09WSBT, 18WSBT | 25WSBT | N/A |

### MODEL RATINGS

| | | Wattage Capacities | | | | |
|---|---|---|---|---|---|---|
| Model | Voltage | 30 min. | 60 min. | 90 min. | 120 min. | Cabinet |
| **EBST-06018** | 6V | 18 | 9 | N/A | N/A | A |
| **EBST-06036** | 6V | 36 | 18 | 12 | 9 | A |
| **EBST-06050** | 6V | 50 | 25 | 16 | 12 | A |
| **EBST-06072** | 6V | 72 | 36 | 24 | 18 | B |
| **EBST-06100** | 6V | 100 | 50 | 33 | 25 | B |
| **EBST-06160** | 6V | 160 | 80 | 53 | 40 | C |
| **EBST-06180** | 6V | 180 | 90 | 60 | 45 | C |
| **EBST-12036** | 12V | 36 | 18 | 12 | 9 | A |
| **EBST-12050** | 12V | 50 | 25 | 16 | 12 | A |
| **EBST-12072** | 12V | 72 | 36 | 24 | 18 | A |
| **EBST-12100** | 12V | 100 | 50 | 33 | 25 | B |
| **EBST-12144** | 12V | 144 | 72 | 48 | 36 | C |
| **EBST-12160** | 12V | 160 | 80 | 53 | 40 | C |
| **EBST-12200** | 12V | 200 | 100 | 66 | 50 | C |
| **EBST-12250** | 12V | 250 | 125 | 83 | 62 | D |
| **EBST-12360** | 12V | 360 | 180 | 120 | 90 | D |
| **EBST-24144** | 24V | 144 | 72 | 48 | 36 | C |
| **EBST-24200** | 24V | 200 | 100 | 66 | 50 | C |
| **EBST-24320** | 24V | 320 | 160 | 106 | 80 | D |
| **EBST-24350** | 24V | 350 | 175 | 116 | 87 | E |
| **EBST-24560** | 24V | 560 | 280 | 180 | 137 | E |
| **EBST-24720** | 24V | 720 | 360 | 240 | 180 | E |

**NOTE:** Due to cabinet/space limitations, not all options are available for all models in any given combination. Please consult with your factory representative regarding specific options and exact cabinet dimension information.

| | | | |
|---|---|---|---|
| WSA LIGHT ▪ ENERGY ▪ DESIGN | Project 18-21616-1<br>Iqualuit WWTP<br>Submitted By<br>WSA LIGHT ENERGY DESIGN LTD | Catalog Number<br>RPSTUMWHT-UNVDC<br>Notes<br>stock-2 weeks | Type<br>EX |

# RPST

Project:

Contractor:

## STEEL
NBC2010 Compliant



**Approvals:**
CSA Certified to C22.2 #141.15 and C860

### DESCRIPTION
The clean lines of the RPST series of commercial steel signs present a fully modern appearance. The steel provides for a rigid, durable and lightweight sign. Available in AC only, AC/DC and internally self-powered versions.

### CIRCUITRY - AC & AC/DC
- LED ultra bright light source
- 120/347VAC Input, field selectable
- 1.9W power consumption single or double face
- Emergency DC wattages as follows:
  **6VDC** = 0.9W **12VDC** = 0.9W **24VDC** = 0.9W

### CIRCUITRY - SELF-POWERED
- LED ultra bright light source
- 120/347VAC Input, field selectable
- 2.0W power consumption single or double face
- High-performance, Ni-Cad battery
- 90 or 120 minutes emergency duration
- Solid state transfer and battery charger

### MECHANICAL
Supply and install AimLite Steel LED Running Man sign in accordance with NBC2010, C22.2 No. 141. The equipment shall operate with universal AC input of 120/347V at less than 2.0W and universal DC input voltage from 6V to 24V. The housing shall be constructed of rugged steel and have a maximum depth of 2-1/4". The faceplates shall be open face type with a steel contour. The light source shall be high performing light emitting diodes (LED) and the LED lamps shall provide illumination in normal and emergency operation and shall be mounted inside the Running Man housing. A white LED sensitive diffuser shall be used to provide an evenly illuminated green and white legend. Universal models include ceiling or end mount, field installable canopy kit c/w spider plate. Universal models include ceiling or end mount, field installable canopy kit c/w spider plate.

The Running Man in a self powered configuration shall be equipped with a nickel cadmium battery and shall stay illuminated during emergency operation for at least 90 or 120 minutes upon AC fail.

### DIMENSIONS
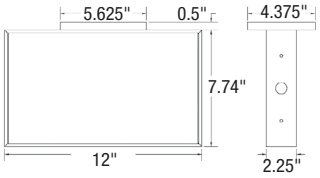




*Comes standard (single face) with three pictogram legends for direction selection.*



*Comes standard (double face) with two pictogram legends.*



*For double face no arrow options, select "0" on the options column.*

### ORDERING GUIDE

| RPST | | M | | — | | / | |
|---|---|---|---|---|---|---|---|

| Series | Nbr of faces | Mounting | Colour | DC Voltage | Options† |
|---|---|---|---|---|---|
| **RPST** | **U** - Universal faces<br>**1** - Single face<br>**2** - Double face | **M** - Universal | **WHT** - White (standard)<br>**BLK** - Black<br>**GRY** - Grey<br>**CUS** - Custom colour (please specify) | **NDC** - AC only<br>**UNVDC** - Universal DC backup voltage from 6 to 24VDC<br>**BAT** - Self-powered for 90 minutes<br>**BAT1** - Self-powered for 120 minutes | **ATD*, WRG**, K5, LXG, SPW, BKO, BNO**<br>**0** - No indicators (double face only)<br>**D U UR DR DL UL**<br>**Note:** Indicators option available for single & double option only. |

† For detailed options descriptions, please consult the options page.
* ATD available with BAT and BAT1.
** Specify mounting.

**Date: July 11, 2018**

REVIEWED BY CONTRACTOR
Kudlik Construction Ltd
NAME: Sandra Rousseau P.Eng
DATE: Jul 11, 2018

# Transmittal

**Arctic Electrical Nunavut Ltd**
PO Box 1381
Iqaluit, Nu.
X0A 0H0
Phone: 867-975-3494
**From: Lee Pitcher**

**Project** **Waste Wate Treatment Plant**
**Location** Iqaluit NU
**To** Kudlik Construction
Contact: Sandra Rousseau P.Eng.
srousseau@kudlik.biz



SE-10
PO-P18-162

Attached are the following items:

- [x] Drawings
- [ ] Prints
- [ ] Plans
- [x] Specifications
- [ ] Information
- [ ] Submittals

Other:

THESE ARE TRANSMITTED FOR:

- [ ] Prior Approval
- [x] Approval
- [ ] Approval as Submitted
- [ ] Approval as Noted
- [ ] Resubmittal for Approval
- [ ] Corrections
- [ ] Your Use
- [ ] Review and Comment
- [ ] Record

Bids due on:
Other:

| Qty | Type | MFG | Part |
|---|---|---|---|

Section 26 05 36 Cable Trays for Electrical Systems

STANTEC PROJECT #: 110126045
SUBMITTAL # ELE-010

This review by Stantec is for general conformance with the design concept of Stantec's design of the:

- [ ] Architectural
- [ ] Structural
- [ ] Mechanical
- [x] Electrical
- [ ] Other

component(s) only and does not mean that Stantec has verified or approves the shop drawing(s). The Contractor remains solely responsible for the shop drawing(s) and this review by Stantec does not relieve the Contractor of the Contractor's responsibility for errors or omissions in the shop drawing(s) or for meeting all requirements of the contract documents. This review does not mean that Stantec approves the detailed design inherent in the shop drawing, responsibility for which shall remain with the Contractor submitting same, nor does this review mean that Stantec accepts any deviation of the shop drawing(s) from the contract documents. The Contractor is responsible for confirming all dimensions and correlating them at the job site, for all construction means, methods and techniques, and for coordination of construction work of all trades, including coordination of all shop drawings.

Stantec

- [ ] REVIEWED
- [x] REVIEWED, AS NOTED
- [ ] REVISE AND RESUBMIT
- [ ] NOT REVIEWED

DATE 2018-07-30
BY Konrad

**Notes:**
Please review the attached approval drawings carefully. Production cannot be scheduled until a signed copy of the final approved drawing are received. Be aware that once drawings are approved, any errors due to incorrect information are the responsibility of the

Responsibility remains with the contractor as per the contract documents.

Do not hesitate to contact me if you have any questions or concerns.

# Engineering Cable Tray Specification (cont'd)

## Table 3

Steel Load / Span Class Designation

| Side Rail Height (in.) | Series | Load Depth (in.) Nominal | NEMA Class | CSA Class |
|---|---|---|---|---|
| 3-5/8 | SH13/SP13/SS13 | 2-5/8 | 12A | C/3m |
| 4 | SH14/SP14/SS14<br>SH34/SP34/SS34 | 3 | 12C<br>20A | D/3m<br>D/6m |
| 5 | SH25/SP25/SS25<br>SH45/SP45/SS45<br>SH55/SP55 | 4 | 20A<br>20B<br>20C | D/6m<br>E/6m |
| 6 | SH16/SP16/SS16<br>SH36/SP36/SS36<br>SH46/SP46/SS46 | 5 | 20A<br>20B<br>20C | D/6m<br>E/6m<br>– |
| 7 | SH37/SP37/SS37 | 6 | 20C | – |

**Must Confirm Class of Tray Required-Quoted Series 1

# Straight Lengths

## 6 in. Straight Sections
## Series 1-6, 3-6, 4-6

**Ladder, ventilated and solid trough**

## Straight Section Number Selection P/N- SH1624L12-3

**SH3624L12-6**

| Material Prefix | Series | Side Rail Height | Width | Bottom Type | Length |
|---|---|---|---|---|---|
| SP • Pregalvanized<br>SH • Hot-dipped galvanized after fabrication<br>SS • Stainless Steel 316 | 1 • Series 1<br>3 • Series 3<br>4 • Series 4 | 6 • (6 in.) | 06 • (6 in.)<br>09 • (9 in.)<br>12 • (12 in.)<br>18 • (18 in.)<br>24 • (24 in.)<br>30 • (30 in.)<br>36 • (36 in.)<br>42 • (42 in.) | L06 • 6 in. rung spacing<br>L09 • 9 in. rung spacing<br>L12 • 12 in. rung spacing<br>V • Ventilated **<br>S • Solid trough | 3 • (3 meters)<br>6 • (6 meters)<br>144 • (12 ft.)<br>288 • (24 ft.) |

** For load ratings of CSA Class C/NEMA 8C or less, please see an alternative ventilated series of cable tray called - One-Piece found on pages A160 to A191 of this catalogue.

## Technical Specifications

All calculations and data are based on 42 in. wide cable trays with rungs spaced on 12 in. centers with tray supported as simple spans with deflection measured at the midpoint. Continuous spans may reduce deflection by as much as 50%.

**Deflection factor:** For lighter loads, deflection at any length can be calculated by multiplying the load by the deflection factor.

For Fittings consult pages A50 to A91.

| Series | | Support Span (Feet) | | | | | | | |
|---|---|---|---|---|---|---|---|---|---|
| | | 6 | 8 | 10 | 12 | 14 | 16 | 18 | 20 |
| SP1-6 | Load (lb.)/ft. | 556 | 313 | 200 | 139 | 102 | 78 | 62 | 50 |
| SH1-6 | Deflection (in.) | 0.122 | 0.216 | 0.338 | 0.486 | 0.662 | 0.865 | 1.095 | 1.351 |
| SS1-6 | Deflection Factor | 0.0002 | 0.0007 | 0.0017 | 0.0036 | 0.0065 | 0.0111 | 0.0177 | 0.0270 |
| SP3-6 | Load (lb.)/ft. | 833 | 469 | 300 | 208 | 153 | 117 | 93 | 75 |
| SH3-6 | Deflection (in.) | 0.151 | 0.268 | 0.419 | 0.603 | 0.821 | 1.072 | 1.357 | 1.675 |
| SS3-6 | Deflection Factor | 0.0002 | 0.0006 | 0.0014 | 0.0030 | 0.0055 | 0.0092 | 0.0146 | 0.0223 |
| SP4-6 | Load (lb.)/ft. | – | 728 | 466 | 324 | 238 | 182 | 144 | 117 |
| SH4-6 | Deflection (in.) | – | 0.312 | 0.487 | 0.702 | 0.955 | 1.247 | 1.579 | 1.949 |
| SS4-6 | Deflection Factor | – | 0.0004 | 0.0011 | 0.0022 | 0.0041 | 0.0069 | 0.0110 | 0.0167 |

# Straight Lengths

## 6 in. Straight Sections
## Series 1-6, 3-6, 4-6

**Ladder, ventilated and solid trough**

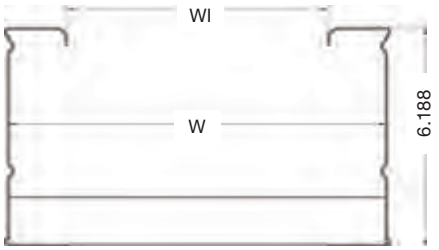




## Dimensions

| SP1-6, SH1-6, SS1-6, SP3-6, SH3-6, SS3-6, SP4-6, SH4-6, SS4-6 | |
|---|---|
| **W (in.)** | **Wi (in.)** |
| 6 | 3.34 |
| 9 | 6.34 |
| 12 | 9.34 |
| 18 | 15.34 |
| 24 | 21.34 |
| 30 | 27.34 |
| 36 | 33.34 |
| 42 | 39.34 |

## Technical Specifications

**LOAD RATINGS:** 1.5 Safety factor. All tray sections will support an additional 200 lb. concentrated load on any portion of tray (side rail, rung, etc.) above and beyond published load class.

| Series | Dimensions | Side Rail Design Factors • 1 Pair | Classifications | | | |
|---|---|---|---|---|---|---|
| | | | NEMA | CSA | UL | ABS |
| **SP1-6**<br>**SH1-6**<br>**SS1-6** | 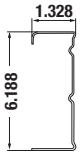 | Ix = 4.44 in.$^4$<br>Sx = 1.39 in.$^3$<br>Area = 0.874 in.$^2$ | **20A** | **D/6M** | UL cross sectional Area : 0.70 in.$^2$ | Stainless steel only |
| **SP3-6**<br>**SH3-6**<br>**SS3-6** | 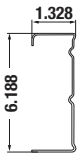 | Ix = 5.373 in.$^4$<br>Sx = 1.70 in.$^3$<br>Area = 1.229 in.$^2$ | **20A** | **E/6M** | UL cross sectional Area : 1.00 in.$^2$ | Stainless steel only |
| **SP4-6**<br>**SH4-6**<br>**SS4-6** | 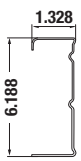 | Ix = 7.173 in.$^4$<br>Sx = 2.250 in.$^3$<br>Area = 1.471 in.$^2$ | **20C** | **Exceeds E/6M** | UL cross sectional Area : 1.00 in.$^2$ | Stainless steel only |

# Fittings

## 45° / 30° Horizontal Bends

### Part Numbering System

**SHF 4 24 L HB45 12**

- SHF: Prefix (SPF, SHF, SSF)
- 4: Side rail height
- 24: Width
- L: Bottom style
- HB45: Fitting type
- 12: Angle
- Nominal radius

### Selection Guide

Prefix: SPF (Pregalv.) ,SHF (Hot-Dip) ,SSF (Stainless Steel)
Inside Tray Widths: 6, 9, 12, 18, 24, 30, 36, 42
Angle: 45º, 30º
Nominal Radius: 12, 24, 36, 48
Bottom Styles: L– Ladder, V– Ventilated, S– Solid
Side Rail Heights: 3 in., 4 in., 5 in., 6 in., 7 in.

P/N - SHF624LHB9024

### 45º Horizontal BEND



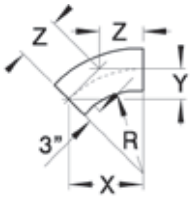


| Nominal | | Cat. No. | Dimensions | | |
|---|---|---|---|---|---|
| Radius | Width | | X | Y | Z |
| 12 | 6 | Prefix(†)-06-(*)-HB45-12 | 13-5/8 | 5-5/8 | 8 |
| | 9 | Prefix(†)-09-(*)-HB45-12 | 14-11/16 | 6-1/16 | 8-9/16 |
| | 12 | Prefix(†)-12-(*)-HB45-12 | 15-3/4 | 6-1/2 | 9-3/16 |
| | 18 | Prefix(†)-18-(*)-HB45-12 | 17-7/8 | 7-3/8 | 10-7/16 |
| | 24 | Prefix(†)-24-(*)-HB45-12 | 20 | 8-1/4 | 11-11/16 |
| | 30 | Prefix(†)-30-(*)-HB45-12 | 22-1/16 | 9-1/8 | 12-15/16 |
| | 36 | Prefix(†)-36-(*)-HB45-12 | 24-3/16 | 10 | 14-3/16 |
| | 42 | Prefix(†)-42-(*)-HB45-12 | 26-5/16 | 10-15/16 | 15-7/16 |
| 24 | 6 | Prefix(†)-06-(*)-HB45-24 | 22-1/16 | 9-1/8 | 12-15/16 |
| | 9 | Prefix(†)-09-(*)-HB45-24 | 23-1/8 | 9-9/16 | 13-9/16 |
| | 12 | Prefix(†)-12-(*)-HB45-24 | 24-3/16 | 10 | 14-3/16 |
| | 18 | Prefix(†)-18-(*)-HB45-24 | 26-5/16 | 10-15/16 | 15-7/16 |
| | 24 | Prefix(†)-24-(*)-HB45-24 | 28-7/16 | 11-13/16 | 16-11/16 |
| | 30 | Prefix(†)-30-(*)-HB45-24 | 30-9/16 | 12-11/16 | 17-15/16 |
| | 36 | Prefix(†)-36-(*)-HB45-24 | 32-11/16 | 13-9/16 | 19-1/8 |
| | 42 | Prefix(†)-42-(*)-HB45-24 | 34-13/16 | 14-7/8 | 20-3/8 |
| 36 | 6 | Prefix(†)-06-(*)-HB45-36 | 30-9/16 | 12-11/16 | 17-15/16 |
| | 9 | Prefix(†)-09-(*)-HB45-36 | 31-5/8 | 13-1/8 | 18-9/16 |
| | 12 | Prefix(†)-12-(*)-HB45-36 | 32-11/16 | 13-9/16 | 19-1/8 |
| | 18 | Prefix(†)-18-(*)-HB45-36 | 34-13/16 | 14-7/16 | 20-3/8 |
| | 24 | Prefix(†)-24-(*)-HB45-36 | 36-15/16 | 15-5/16 | 21-5/8 |
| | 30 | Prefix(†)-30-(*)-HB45-36 | 39-1/16 | 16-3/16 | 22-7/8 |
| | 36 | Prefix(†)-36-(*)-HB45-36 | 41-3/16 | 17-1/16 | 24-1/8 |
| | 42 | Prefix(†)-42-(*)-HB45-36 | 43-5/16 | 17-15/16 | 25-3/8 |
| 48 | 6 | Prefix(†)-06-(*)-HB45-48 | 39-1/16 | 16-3/16 | 22-7/8 |
| | 9 | Prefix(†)-09-(*)-HB45-48 | 40-1/8 | 16-3/8 | 23-1/2 |
| | 12 | Prefix(†)-12-(*)-HB45-48 | 41-3/16 | 17-1/16 | 24-1/8 |
| | 18 | Prefix(†)-18-(*)-HB45-48 | 43-5/16 | 17-15/16 | 25-3/8 |
| | 24 | Prefix(†)-24-(*)-HB45-48 | 45-7/16 | 18-13/16 | 26-5/8 |
| | 30 | Prefix(†)-30-(*)-HB45-48 | 47-9/16 | 19-11/16 | 27-7/8 |
| | 36 | Prefix(†)-36-(*)-HB45-48 | 49-11/16 | 20-9/16 | 29-1/8 |
| | 42 | Prefix(†)-42-(*)-HB45-48 | 51-13/16 | 21-7/16 | 30-5/16 |

### 30º Horizontal BEND



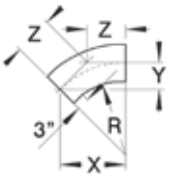


| Nominal | | Cat. No. | Dimensions | | |
|---|---|---|---|---|---|
| Radius | Width | | X | Y | Z |
| 12 | 6 | Prefix(†)-06-(*)-HB30-12 | 11-5/8 | 3-1/8 | 6-3/16 |
| | 9 | Prefix(†)-09-(*)-HB30-12 | 12-3/8 | 3-5/16 | 6-5/8 |
| | 12 | Prefix(†)-12-(*)-HB30-12 | 13-1/2 | 3-1/2 | 7 |
| | 18 | Prefix(†)-18-(*)-HB30-12 | 14-5/8 | 3-15/16 | 7-13/16 |
| | 24 | Prefix(†)-24-(*)-HB30-12 | 16-1/8 | 4-5/16 | 8-5/8 |
| | 30 | Prefix(†)-30-(*)-HB30-12 | 17-5/8 | 4-11/16 | 9-7/16 |
| | 36 | Prefix(†)-36-(*)-HB30-12 | 19-1/8 | 5-1/8 | 10-1/4 |
| | 42 | Prefix(†)-42-(*)-HB30-12 | 20-5/8 | 5-1/2 | 11-1/16 |
| 24 | 6 | Prefix(†)-06-(*)-HB30-24 | 17-5/8 | 4-11/16 | 9-7/16 |
| | 9 | Prefix(†)-09-(*)-HB30-24 | 18-3/8 | 4-15/16 | 9-13/16 |
| | 12 | Prefix(†)-12-(*)-HB30-24 | 19-1/8 | 5-2/16 | 10-4/16 |
| | 18 | Prefix(†)-18-(*)-HB30-24 | 20-5/8 | 5-8/16 | 11-1/16 |
| | 24 | Prefix(†)-24-(*)-HB30-24 | 22-1/8 | 5-15/16 | 11-13/16 |
| | 30 | Prefix(†)-30-(*)-HB30-24 | 23-5/8 | 6-5/16 | 12-10/16 |
| | 36 | Prefix(†)-36-(*)-HB30-24 | 25-1/8 | 6-12/16 | 13-7/16 |
| | 42 | Prefix(†)-42-(*)-HB30-24 | 26-5/8 | 7-1/8 | 14-1/4 |
| 36 | 6 | Prefix(†)-06-(*)-HB30-36 | 23-5/8 | 6-5/16 | 12-5/8 |
| | 9 | Prefix(†)-09-(*)-HB30-36 | 24-3/8 | 6-1/2 | 13-1/16 |
| | 12 | Prefix(†)-12-(*)-HB30-36 | 25-1/8 | 6-3/4 | 13-7/16 |
| | 18 | Prefix(†)-18-(*)-HB30-36 | 26-5/8 | 7-1/4 | 14-1/4 |
| | 24 | Prefix(†)-24-(*)-HB30-36 | 28-1/8 | 7-1/2 | 15-1/16 |
| | 30 | Prefix(†)-30-(*)-HB30-36 | 29-5/8 | 7-15/16 | 15-7/8 |
| | 36 | Prefix(†)-36-(*)-HB30-36 | 31-1/8 | 8-5/16 | 16-11/16 |
| | 42 | Prefix(†)-42-(*)-HB30-36 | 32-5/8 | 8-3/4 | 17-1/2 |
| 48 | 6 | Prefix(†)-06-(*)-HB30-48 | 29-5/8 | 7-15/16 | 15-7/8 |
| | 9 | Prefix(†)-09-(*)-HB30-48 | 30-3/8 | 8-1/8 | 16-1/4 |
| | 12 | Prefix(†)-12-(*)-HB30-48 | 31-1/8 | 8-5/16 | 16-11/16 |
| | 18 | Prefix(†)-18-(*)-HB30-48 | 32-5/8 | 8-3/4 | 17-1/2 |
| | 24 | Prefix(†)-24-(*)-HB30-48 | 34-1/8 | 9-1/8 | 18-1/4 |
| | 30 | Prefix(†)-30-(*)-HB30-48 | 35-5/8 | 9-9/16 | 19-1/16 |
| | 36 | Prefix(†)-36-(*)-HB30-48 | 37-1/8 | 9-15/16 | 19-7/8 |
| | 42 | Prefix(†)-42-(*)-HB30-48 | 38-5/8 | 10-5/16 | 20-11/16 |

(†) Insert side rail height. (*) Insert bottom style to complete CAT. NO. Includes 1 pair of splice plates with hardware.

# Fittings

## Horizontal Tees, Crosses

### Part Numbering System

**SHF 4 24 L HT 12**

- SHF — Prefix: SPF, SHF, SSF
- 4 — Side rail height
- 24 — Width
- L — Bottom style
- HT — Fitting type
- 12 — Nominal radius

### Selection Guide

Prefix: SPF (Pregalv.), SHF (Hot-Dip) ,SSF (Stainless Steel)
Inside Tray Widths: 6, 9, 12, 18, 24, 30, 36, 42
Nominal Radius: 12, 24, 36, 48
Bottom Styles: L– Ladder, V– Ventilated, S– Solid
Side Rail Heights: 3 in., 4 in., 5 in., 6 in., 7 in.

P/N- SHF624LHT24

### Horizontal TEE

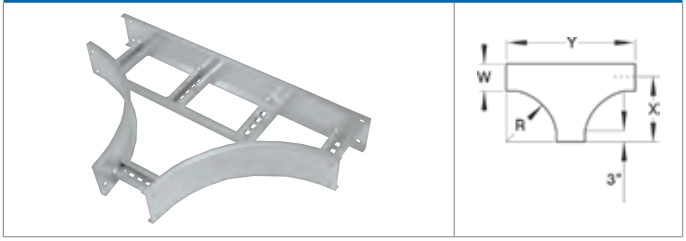


| Nominal | | Cat. No. | Dimensions | |
|---|---|---|---|---|
| Radius | Width | | X | Y |
| 12 | 6 | Prefix(†)-06-(*)-HT12 | 15 | 30 |
| | 9 | Prefix(†)-09-(*)-HT12 | 16-1/2 | 33 |
| | 12 | Prefix(†)-12-(*)-HT12 | 18 | 36 |
| | 18 | Prefix(†)-18-(*)-HT12 | 21 | 42 |
| | 24 | Prefix(†)-24-(*)-HT12 | 24 | 48 |
| | 30 | Prefix(†)-30-(*)-HT12 | 27 | 54 |
| | 36 | Prefix(†)-36-(*)-HT12 | 30 | 60 |
| | 42 | Prefix(†)-42-(*)-HT12 | 33 | 66 |
| 24 | 6 | Prefix(†)-06-(*)-HT24 | 27 | 54 |
| | 9 | Prefix(†)-09-(*)-HT24 | 28-1/2 | 57 |
| | 12 | Prefix(†)-12-(*)-HT24 | 30 | 60 |
| | 18 | Prefix(†)-18-(*)-HT24 | 33 | 66 |
| | 24 | Prefix(†)-24-(*)-HT24 | 36 | 72 |
| | 30 | Prefix(†)-30-(*)-HT24 | 39 | 78 |
| | 36 | Prefix(†)-36-(*)-HT24 | 42 | 84 |
| | 42 | Prefix(†)-42-(*)-HT24 | 45 | 90 |
| 36 | 6 | Prefix(†)-06-(*)-HT36 | 39 | 78 |
| | 9 | Prefix(†)-09-(*)-HT36 | 40-1/2 | 81 |
| | 12 | Prefix(†)-12-(*)-HT36 | 42 | 84 |
| | 18 | Prefix(†)-18-(*)-HT36 | 45 | 90 |
| | 24 | Prefix(†)-24-(*)-HT36 | 48 | 96 |
| | 30 | Prefix(†)-30-(*)-HT36 | 51 | 102 |
| | 36 | Prefix(†)-36-(*)-HT36 | 54 | 108 |
| | 42 | Prefix(†)-42-(*)-HT36 | 57 | 114 |
| 48 | 6 | Prefix(†)-06-(*)-HT48 | 51 | 102 |
| | 9 | Prefix(†)-09-(*)-HT48 | 52-1/2 | 105 |
| | 12 | Prefix(†)-12-(*)-HT48 | 54 | 108 |
| | 18 | Prefix(†)-18-(*)-HT48 | 57 | 114 |
| | 24 | Prefix(†)-24-(*)-HT48 | 60 | 120 |
| | 30 | Prefix(†)-30-(*)-HT48 | 63 | 126 |
| | 36 | Prefix(†)-36-(*)-HT48 | 66 | 132 |
| | 42 | Prefix(†)-42-(*)-HT48 | 69 | 138 |

### Horizontal CROSS

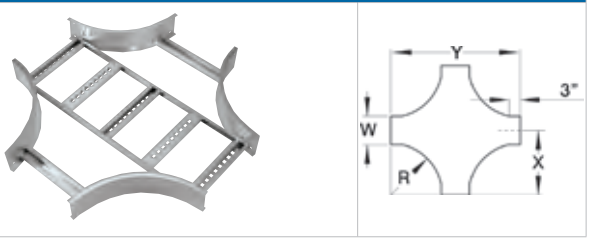


| Nominal | | Cat. No. | Dimensions | |
|---|---|---|---|---|
| Radius | Width | | X | Y |
| 12 | 6 | Prefix(†)-06-(*)-HX12 | 15 | 30 |
| | 9 | Prefix(†)-09-(*)-HX12 | 16-1/2 | 33 |
| | 12 | Prefix(†)-12-(*)-HX12 | 18 | 36 |
| | 18 | Prefix(†)-18-(*)-HX12 | 21 | 42 |
| | 24 | Prefix(†)-24-(*)-HX12 | 24 | 48 |
| | 30 | Prefix(†)-30-(*)-HX12 | 27 | 54 |
| | 36 | Prefix(†)-36-(*)-HX12 | 30 | 60 |
| | 42 | Prefix(†)-42-(*)-HX12 | 33 | 66 |
| 24 | 6 | Prefix(†)-06-(*)-HX24 | 27 | 54 |
| | 9 | Prefix(†)-09-(*)-HX24 | 28-1/2 | 57 |
| | 12 | Prefix(†)-12-(*)-HX24 | 30 | 60 |
| | 18 | Prefix(†)-18-(*)-HX24 | 33 | 66 |
| | 24 | Prefix(†)-24-(*)-HX24 | 36 | 72 |
| | 30 | Prefix(†)-30-(*)-HX24 | 39 | 78 |
| | 36 | Prefix(†)-36-(*)-HX24 | 42 | 84 |
| | 42 | Prefix(†)-42-(*)-HX24 | 45 | 90 |
| 36 | 6 | Prefix(†)-06-(*)-HX36 | 39 | 78 |
| | 9 | Prefix(†)-09-(*)-HX36 | 40-1/2 | 81 |
| | 12 | Prefix(†)-12-(*)-HX36 | 42 | 84 |
| | 18 | Prefix(†)-18-(*)-HX36 | 45 | 90 |
| | 24 | Prefix(†)-24-(*)-HX36 | 48 | 96 |
| | 30¥ | Prefix(†)-30-(*)-HX36 | 51 | 102 |
| | 36¥ | Prefix(†)-36-(*)-HX36 | 54 | 108 |
| | 42¥ | Prefix(†)-42-(*)-HX36 | 57 | 114 |
| 48¥ | 6 | Prefix(†)-06-(*)-HX48 | 51 | 102 |
| | 9 | Prefix(†)-09-(*)-HX48 | 52-1/2 | 105 |
| | 12 | Prefix(†)-12-(*)-HX48 | 54 | 108 |
| | 18 | Prefix(†)-18-(*)-HX48 | 57 | 114 |
| | 24 | Prefix(†)-24-(*)-HX48 | 60 | 120 |
| | 30 | Prefix(†)-30-(*)-HX48 | 63 | 126 |
| | 36 | Prefix(†)-36-(*)-HX48 | 66 | 132 |
| | 42 | Prefix(†)-42-(*)-HX48 | 69 | 138 |

(†) Insert side rail height. (*) Insert bottom style to complete CAT. NO. Tees include 2 pairs / Crosses include 3 pairs of splice plates with hardware.
¥ Shipped with SPW-3/8HXHWK hardware kit.

# Splice Plates

## Splice Plate



Packaged in pairs with zinc plated hardware. Kit contents
4 bolts, 4 nuts, 4 washers
3/8 in. diameter.

Provided as standard with each straight and/or fitting.

| Cat. No. | Material Prefix | Side Rail Height |
|---|---|---|
| (Prefix)-3-SSP<br>(Prefix)-4-SSP<br>(Prefix)-5-SSP<br>(Prefix)-6-SSP<br>(Prefix)-7-SSP | SPW<br>SHW<br>SSW | 4<br>5<br>6<br>7 |

P/N- SHW6SSP

## Expansion Splice Plate

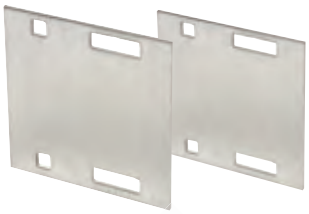

Allows for a 1 in. expansion or contraction of tray system.

Packaged in pairs with hardware. Kit contents
8 bolts, 8 stop nuts, 4 serrated flange nuts 3/8 in. diameter.

| Cat. No. | Material Prefix | Side Rail Height |
|---|---|---|
| (Prefix)-3-ESP<br>(Prefix)-4-ESP<br>(Prefix)-5-ESP<br>(Prefix)-6-ESP<br>(Prefix)-7-ESP | SPW<br>SHW<br>SSW | 3<br>4<br>5<br>6<br>7 |

## Transition Splice Plate



| Cat. No. | Material | Description | Side Rail Height |
|---|---|---|---|
| XNM-XP400-(*)-SS6 | Polyester/Fiberglass | Designed to make the transition. from aluminum to steel cable tray Works for all 6 in. side rails. | 6 |

Each pair of plate:
8 x carriage bolt (3/8 x 1 in.) SS316
8 x 3/8 in. serrated flange nut SS316

## Step Down Splice Plate



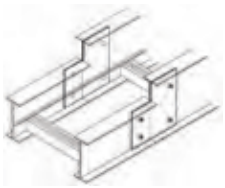

Connects side rails of different heights. Hardware included.
Kit contents 8 bolts, 8 nuts, 8 washers 3/8 in. diameter.

| Cat. No. | Material Prefix | Side Rail Width (in.) |
|---|---|---|
| (Prefix)-(*)-(**)-SDS | SPW<br>SHW<br>SSW | 4<br>5<br>6<br>7 |

(*) Insert side rail height 1.
(**) Insert side rail height 2.
Note: Side rail height 1 is greater than side rail height 2.

## Horizontal Adjustable Plate



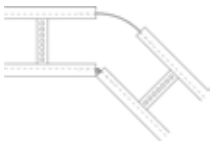

Furnished in pairs with hardware.

| Cat. No. | Material Prefix | Side Rail Height (in.) | Tray Width (in.) |
|---|---|---|---|
| (Prefix)-(*)06HBP<br>(Prefix)-(*)09HBP<br>(Prefix)-(*)12HBP<br>(Prefix)-(*)18HBP<br>(Prefix)-(*)24HBP<br>(Prefix)-(*)30HBP<br>(Prefix)-(*)36HBP<br>(Prefix)-(*)42HBP | SPW<br>SHW<br>SSW | 3<br>4<br>5<br>6<br>7 | 06<br>09<br>12<br>18<br>24<br>30<br>36<br>42 |

(*) Insert side rail height.

# Clamps and Hardware

## Self-drilling – tapping screw



| Cat. No. | Material | Description |
|---|---|---|
| SPW-10-SCR | Zinc plated steel | Self-drilling – tapping screw |
| SSW-10-SCR | Stainless steel | Self-drilling – tapping screw |

## Hold Down Clamp



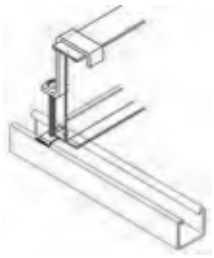

| Cat. No. | Material Prefix | Side Rail Height (in.) |
|---|---|---|
| (Prefix)-3-HDC | SPW<br>SHW<br>SSW | 3 |
| (Prefix)-4-HDC | | 4 |
| (Prefix)-5-HDC | | 5 |
| (Prefix)-6-HDC | | 6 |
| (Prefix)-7-HDC | | 7 |

Note: Hardware included. Kit contains 1 bolt and 1 channel nut.

PN- SPW6HDC

## Hold Down Clamp



| Cat. No. | Type | Material | Design Load |
|---|---|---|---|
| SPWHDCS | Single | Pregalvanized | 800 lb./pair |
| SHWHDCS | Single | Hot-dipped galvanized | |
| SSWHDCS | Single | Stainless steel 316 | |
| SPWHDCD | Double | Pregalvanized | 1500 lb./pair |
| SHWHDCD | Double | Hot-dipped galvanized | |
| SSWHDCD | Double | Stainless steel 316 | |

## Conduit Clamp



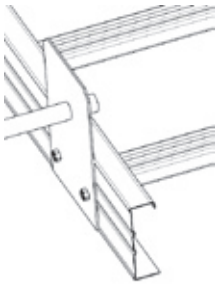

| Cat. No. | Type | Material |
|---|---|---|
| PU100CC | 1 | Pregalvanized |
| PU125CC | 1-1/4 | |
| PU150CC | 1-1/2 | |
| PU200CC | 2 | |
| PU250CC | 2-1/2 | |
| PU300CC | 3 | |
| PU400CC | 4 | |

SQUARE D
by Schneider Electric

| | | | |
|---|---|---|---|
| Job Name: | IQALUIT WASTE WATER TREATMENT UPGR | Square D Quotation #: | 41720903 |
| Job Location: | OTTAWA, ON | Quotation Revision #: | |
| | | Sales Contact: | Michael Childs |
| | | Sales Contact Location: | 806 |
| Purchaser: | 92941–GUILLEVIN INT'L INC. (V4990) | Customer: | ARCTIC ELECTRIC |
| Purchaser PO #: | | Customer PO #: | |
| User: | | Architect: | |
| User Location: | | Cons. Engineer: | |
| Drawing Status: | RECORD | | |

# TABLE OF CONTENTS

SQUARE D FACTORY ORDER NUMBER: 41720903–001


| Equipment Designation | Equipment Type | Drawing Type | Drawing Number | Page | Revision Level |
|---|---|---|---|---|---|
| 1 Seperate VFDS | MODEL 6 MCC | ELEVATION | F41720903–001–01 | 1 | A |
| | | | F41720903–001–01 | 2 | A |
| | | | F41720903–001–01 | 3 | A |
| | | SEISMIC | S41720903–001–01 | 1 | A |
| | | ONE LINE DIAGRAM | 041720903–001–01 | 1 | A |
| | | UNIT INFORMATION | I41720903–001–01 | 1 | A |
| | | ELEMENTARY | E41720903–001–01 | 1 | A |
| | | | E41720903–001–01 | 2 | A |


STANTEC PROJECT #: 110126045

SUBMITTAL # VFDs

This review by Stantec is for general conformance with the design concept of Stantec's design of the:

☐ Architectural
☐ Structural
☐ Mechanical
☑ Electrical
☐ Other

component(s) only and does not mean that Stantec has verified or approves the shop drawing(s). The Contractor remains solely responsible for the shop drawing(s) and this review by Stantec does not relieve the Contractor of the Contractor's responsibility for errors or omissions in the shop drawing(s) or for meeting all requirements of the contract documents. This review does not mean that Stantec approves the detailed design inherent in the shop drawing, responsibility for which shall remain with the Contractor submitting same, nor does this review mean that Stantec accepts any deviation of the shop drawing(s) from the contract documents. The Contractor is responsible for confirming all dimensions and correlating them at the job site, for all construction means, methods and techniques, and for coordination of construction work of all trades, including coordination of all shop drawings.

Stantec

☑ REVIEWED

☐ REVIEWED, AS NOTED

☐ REVISE AND RESUBMIT

☐ NOT REVIEWED

DATE 2018-12-21

BY Evan Harris

| REV | DESCRIPTION | BY | DATE | | | | | | | | | | |
|---|---|---|---|---|---|---|---|---|---|---|---|---|---|
| A | RELEASE TO PRODUCTION | DU | 12/19/2018 | – | ---- | -- | --/--/-- | – | ---- | -- | --/--/-- | | |

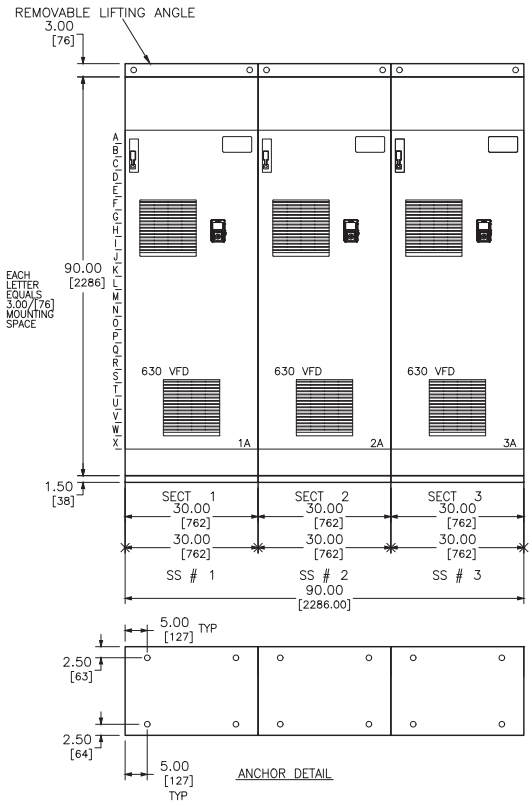


DUAL DIMENSIONS: INCHES / MILLIMETERS

| | | | |
|---|---|---|---|
| JOB NAME: | IQALUIT WASTE WATER TREATMENT UPGR | EQUIPMENT DESIGNATION: | 1 SEPERATE VFDS |
| JOB LOCATION: | OTTAWA, ON | EQUIPMENT TYPE: | MODEL 6 MOTOR CONTROL CENTER |
| DRAWN BY: | KP | DRAWING TYPE: | ELEVATION |
| ENGR: | KP | | |
| DATE: | DECEMBER 17, 2018 | | |
| DRAWING STATUS: | RECORD | DWG# | F41720903-001-01 PG 1 OF 3 REV A |

| REV | DESCRIPTION | BY | DATE | | | | | | | | | | |
|---|---|---|---|---|---|---|---|---|---|---|---|---|---|
| A | RELEASE TO PRODUCTION | DU | 12/19/2018 | – | ---- | -- | --/--/-- | – | ---- | -- | --/--/-- | | |

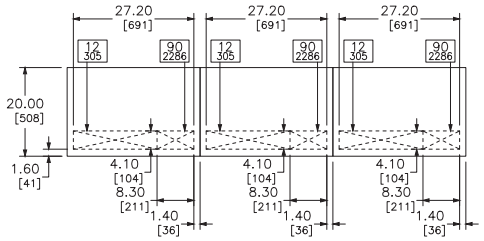


TOP VIEW

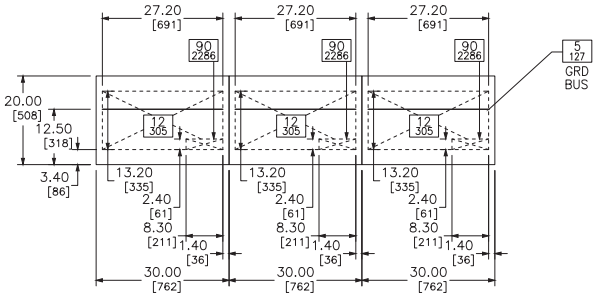


FLOOR VIEW

CROSSED AREA REPRESENTS CONDUIT ENTRY AREA. NUMBERS IN BOXES INDICATE VERTICAL CLEARANCE TO NEAREST OBSTRUCTION.

DUAL DIMENSIONS: INCHES / MILLIMETERS

| | | | |
|---|---|---|---|
| JOB NAME: | IQALUIT WASTE WATER TREATMENT UPGR | EQUIPMENT DESIGNATION: | 1 SEPERATE VFDS |
| JOB LOCATION: | OTTAWA, ON | EQUIPMENT TYPE: | MODEL 6 MOTOR CONTROL CENTER |
| DRAWN BY: | KP | DRAWING TYPE: | ELEVATION |
| ENGR: | KP | | |
| DATE: | DECEMBER 17, 2018 | | |
| DRAWING STATUS: | RECORD | DWG# | F41720903-001-01 |

| REV | DESCRIPTION | BY | DATE | | | | | | | | |
|---|---|---|---|---|---|---|---|---|---|---|---|
| A | RELEASE TO PRODUCTION | DU | 12/19/2018 | – | ---- | -- | --/--/-- | – | ---- | -- | --/--/-- |
| | | | | – | ---- | -- | --/--/-- | – | ---- | -- | --/--/-- |

## GENERAL NOTES

Class 1 Type B Wiring

## PRODUCT DESCRIPTION AND RATINGS

**POWER SYSTEM DATA:**

600V 3PH 3W 60Hz
SHORT CIRCUIT RATING: 22kA
POWER CONNECTS TO EXISTING
CONTROL POWER: 120Vac

**BUS SYSTEM DATA:**

MAIN HORIZONTAL BUS: 600 Amp Copper/Tin Plated / 1.5"
BUS BRACING: 42kA

HORIZONTAL GROUND BUS: .25" X 1.0" (6.35mm X 25.4mm) Tin Plated Copper
Units Securely Grounded To Structure

**ENCLOSURE DATA:**

ENCLOSURE TYPE: 20" DEEP Type 1A
EXTERIOR COLOR: Electrodeposition Finish ANSI 49 Medium Light Grey
INTERIOR COLOR: Electrodeposition Finish White
REMOVABLE 3" [76mm] LIFTING ANGLE

**STRUCTURE MODIFICATIONS:**

Rodent Barriers 1,3
Splice to M6 L

**EQUIPMENT WEIGHT:**

SHIPPING SPLIT # 1: 740.00 Lbs. (335.66 Kg.)
SHIPPING SPLIT # 2: 740.00 Lbs. (335.66 Kg.)
SHIPPING SPLIT # 3: 740.00 Lbs. (335.66 Kg.)
TOTAL LINEUP WEIGHT (APPROX): 2220.00 Lbs. (1006.99 Kg.)

**PRODUCT ACCESSORIES:**

Certified Test Report
Seismic Qualified IBC/ASCE7
Drip Hoods

| | | | |
|---|---|---|---|
| JOB NAME: | IQALUIT WASTE WATER TREATMENT UPGR | EQUIPMENT DESIGNATION: | 1 SEPERATE VFDS |
| JOB LOCATION: | OTTAWA, ON | EQUIPMENT TYPE: | MODEL 6 MOTOR CONTROL CENTER |
| DRAWN BY: | KP | DRAWING TYPE: | ELEVATION |
| ENGR: | KP | | [redacted] |
| DATE: | DECEMBER 17, 2018 | | |
| DRAWING STATUS: | RECORD | DWG# | F41720903-001-01 PG 3 OF 3 REV A |

| REV | DESCRIPTION | BY | DATE | | | | | | | | |
|---|---|---|---|---|---|---|---|---|---|---|---|
| A | RELEASE TO PRODUCTION | DU | 12/19/2018 | – | ---- | -- | --/--/-- | – | ---- | -- | --/--/-- |

## REQUIREMENTS FOR SEISMIC RATING

### ANCHORING CONDITIONS:

To Maintain Seismic Qualifications, Equipment Must Be Installed Per Installation Manual 80459–641–XX And Per Any Seismic Anchoring Details Provided By Others. Do Not Install Equipment Before Approved Seismic Anchoring Details Have Been Obtained And Site Preparations Have Been Made In Accordance With The Approved Seismic Anchoring Details. All Post–Installed Anchors Shall Be Approved For Seismic Loads.

Consideration Must Be Made For Conduit Entry Into Each Section When Developing Mounting Pad Reinforcement Locations. See Conduit Entry Details For Dimensional Information.

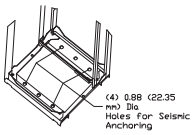


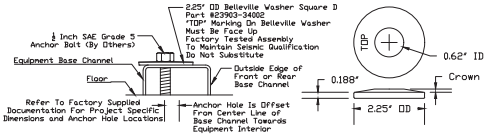


Each MCC Section Must Be Anchored At Four Locations (See Above Details). Anchor Bolt Mounting Points Are .88/[22] Diameter Holes Located 1.50/[38] Above The Base Of The MCC Section. Use Dimensions From The Anchor Detail To Determine Mounting Locations.

The Belleville Washer (Shown In Detail Above) Used For Anchoring Connections Is A Tested Component And Is Required To Maintain Position Retention Of The Equipment. The Slip Critical Connection Performance Of The Bolted Connection Was Established To The Shake Table Tested Seismic Capacity Of The Equipment As Shown On The Equipment Seismic Certificate Supplied At The Time Of Order.

### CENTER OF GRAVITY:

The CG Information Provided Below Should Only Be Used For Seismic Anchoring Calculations.

Elevation Center Of Gravity: 62.00/[1575] Up From Floor Except Masterpact NW Main Use 54.00/[1372] Up From Floor

Depth Center Of Gravity: 7.50/[191] or 10.00/[254] From Rear For 15.00/[381] or 20.00/[508] Deep Sections Respectively. Consult Factory For Sections Taller Than 94.50/[2400].

Vertical Center of Gravity: Use Centerline Of Section From Left To Right

### SECTION WEIGHTS:

The Weights Shown Below Should Only Be Used For Calculating Seismic Anchoring Requirements And Do Not Represent Actual Section Weights As Shipped.

| | |
|---|---|
| 1200 Lbs. (544.3 Kg.) | 35.00/[889] Wide Sections |
| 1300 Lbs. (589.7 Kg.) | 20.00/[508] Wide Sections |
| 1500 Lbs. (680.4 Kg.) | 25.00/[635] And 30.00/[762] Wide Sections* |
| *1900 Lbs. (861.8 Kg.) | 30.00/[762] Wide Section With Masterpact NW Main |
| 2250 Lbs. (1020.6 Kg.) | 50.00/[1270] Wide Section With 18 Pulse Drive |
| 2750 Lbs. (1247.4 Kg.) | 65.00/[1651] Wide Section With 18 Pulse Drive |

| | | | |
|---|---|---|---|
| JOB NAME: | IQALUIT WASTE WATER TREATMENT UPGR | EQUIPMENT DESIGNATION: | 1 SEPERATE VFDS |
| JOB LOCATION: | OTTAWA, ON | EQUIPMENT TYPE: | MODEL 6 MOTOR CONTROL CENTER |
| DRAWN BY: | KP | DRAWING TYPE: | SEISMIC |
| ENGR: | KP | | |
| DATE: | DECEMBER 17, 2018 | | |
| DRAWING STATUS: | RECORD | DWG# | S41720903-001-01 PG 1 OF 1 REV A |

| REV | DESCRIPTION | BY | DATE | | | | | | | | | | |
|---|---|---|---|---|---|---|---|---|---|---|---|---|---|
| A | RELEASE TO PRODUCTION | DU | 12/19/2018 | – | ---- | -- | --/--/-- | – | ---- | -- | --/--/-- | | |

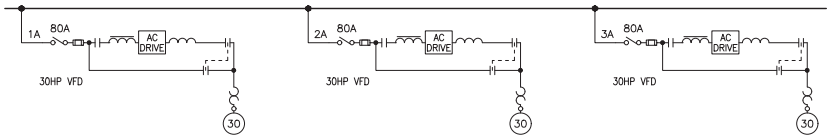


| | | | |
|---|---|---|---|
| JOB NAME: | IQALUIT WASTE WATER TREATMENT UPGR | EQUIPMENT DESIGNATION: | 1 SEPERATE VFDS |
| JOB LOCATION: | OTTAWA, ON | EQUIPMENT TYPE: | MODEL 6 MOTOR CONTROL CENTER |
| DRAWN BY: | KP | DRAWING TYPE: | ONE LINE DIAGRAM |
| ENGR: | KP | | [redacted] |
| DATE: | DECEMBER 17, 2018 | | |
| DRAWING STATUS: | RECORD | DWG# | 041720903-001-01 PG 1 OF 1 REV A |

| REV | DESCRIPTION | BY | DATE | | |

| REV | DESCRIPTION | BY | DATE |
|---|---|---|---|
| A | RELEASE TO PRODUCTION | DU | 12/19/2018 |

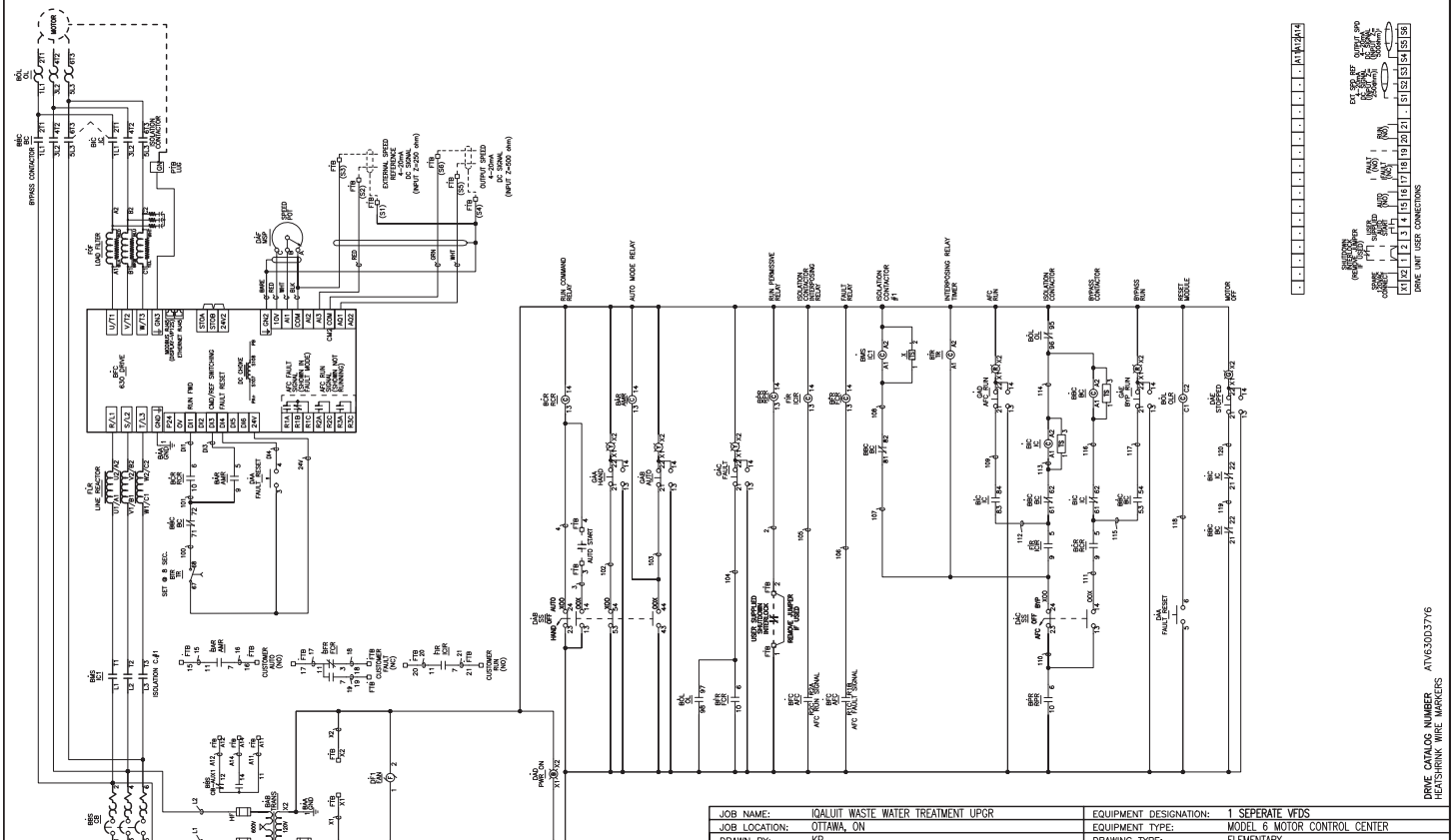

| | | | |
|---|---|---|---|
| JOB NAME: | IQALUIT WASTE WATER TREATMENT UPGR | EQUIPMENT DESIGNATION: | 1 SEPERATE VFDS |
| JOB LOCATION: | OTTAWA, ON | EQUIPMENT TYPE: | MODEL 6 MOTOR CONTROL CENTER |
| DRAWN BY: | KP | DRAWING TYPE: | ELEMENTARY |
| ENGR: | KP | | |
| DATE: | DECEMBER 17, 2018 | DWG# | E41720903-001-01 |
| DRAWING STATUS: | APPROVAL | PG1 OF2 | REV A |

DRIVE CATALOG NUMBER ATV630D37Y6
HEATSHRINK WIRE MARKERS

| REV | DESCRIPTION | BY | DATE | – | ---- | -- | --/--/-- |
|---|---|---|---|---|---|---|---|
| A | RELEASE TO PRODUCTION | DU | 12/19/2018 | – | ---- | -- | --/--/-- |

| ATV630 FACTORY CONFIGURATION WITH BYPASS – HEAVY DUTY – HOA | | | | | | |
|---|---|---|---|---|---|---|
| MENU | TAB | SUB–MENU | DESCRIPTION | SETTING | CODE | ADJ. |
| 1 | S.START | ---- | 2/3 WIRE CONTROL | 2C | TCC | 2C |
| 1 | S.START | ---- | BASIC FREQUENCY | 60Hz NEMA | BFR | 60 |
| 1 | S.START | ---- | MAX FREQUENCY | 60 | TFR | 60 |
| 1 | S.START | ---- | LOW SPEED | 3 | LSP | 3 |
| 1 | S.START | ---- | ACCELERATION | 10 | ACC | 10 |
| 1 | S.START | ---- | DECELERATION | 10 | DEC | 10 |
| 5.2 | --- | SWITCHING FREQUENCY | SWITCHING FREQUENCY | 2.5 | SFR | 2.5 |
| 5.2 | --- | DUAL RATING | DUAL RATING | HEAVY DUTY | DRT | HIGH |
| 5.5 | --- | ---- | REF FREQ 1 CONFIG | AI1 | FR1 | AI1 |
| 5.5 | --- | ---- | FREQ SWITCH ASSIGN | DI3 | RFC | DI3 |
| 5.5 | --- | ---- | 2–WIRE TYPE | LEVEL | TCT | LEL |
| 5.5 | --- | ---- | REF FREQ 2 CONFIG | AI3 | FR2 | AI3 |
| 5.5 | --- | CONTROL MODE | CONTROL MODE | CONTROL MODE I/O PROFILE | CHCF | IO |
| 5.5 | --- | COMMAND SWITCHING | COMMAND SWITCHING | DI3 | CCS | DI3 |
| 5.5 | --- | CMD CHANNEL 1 | CMD CHANNEL 1 | TERMINAL | CD1 | TER |
| 5.5 | --- | CMD CHANNEL 2 | CMD CHANNEL 2 | TERMINAL | CD2 | TER |
| 5.11 | AI/AQ | AI3 CONFIGURATION | AI3 MIN VALUE | 4 | CLR3 | 4 |
| 5.11 | AI/AQ | AQ1 CONFIGURATION | AQ1 ASSIGNMENT | MOTOR FREQUENCY | AO1 | OFR |
| 5.11 | AI/AQ | AQ1 CONFIGURATION | AQ1 MIN OUTPUT | 4 | AOL1 | 4 |
| 5.11 | RELAY | R1 CONFIGURATION | R1 ASSIGNMENT | OPERATING STATE | R1 | FLT |
| 5.11 | RELAY | R2 CONFIGURATION | R2 ASSIGNMENT | DRIVE RUNNING | R2 | RUN |
| 5.12 | --- | CATCH ON THE FLY | CATCH ON THE FLY | YES | FLR | YES |
| 5.12 | --- | OUTPUT PHASE LOSS | OUTPUT PHASE LOSS | FUNCTION INACTIVE | OPL | FI |

| | | | |
|---|---|---|---|
| JOB NAME: | IQALUIT WASTE WATER TREATMENT UPGR | EQUIPMENT DESIGNATION: | 1 SEPERATE VFDS |
| JOB LOCATION: | OTTAWA, ON | EQUIPMENT TYPE: | MODEL 6 MOTOR CONTROL CENTER |
| DRAWN BY: | KP | DRAWING TYPE: | ELEMENTARY |
| ENGR: | KP | | SQUARE D by Schneider Electric |
| DATE: | DECEMBER 17, 2018 | | |
| DRAWING STATUS: | APPROVAL | DWG# E41720903-001-01 | PG 2 OF 2 REV A |

**Date: Jan 21, 2019**

REVIEWED BY CONTRACTOR
Kudlik Construction Ltd.
NAME: Sandra Rousseau P.Eng
DATE: Jan 21, 2019

# Transmittal

**Arctic Electrical Nunavut Ltd**
PO Box 1381
Iqaluit, Nu.
X0A 0H0
Phone: 867-975-3494
**From: Lee Pitcher**



**Project** **Waste Waste Treatment Plant**
**Location** Iqaluit NU
**To** Kudlik Construction
Contact: Sandra Rousseau P.Eng.
srousseau@kudlik.biz

SE-14
PO-Guillevin-Quote-1135711

Attached are the following items:

- [ ] Drawings
- [ ] Prints
- [ ] Plans
- [x] Specifications
- [ ] Information
- [ ] Submittals

Other:

THESE ARE TRANSMITTED FOR:

- [ ] Prior Approval
- [x] Approval
- [ ] Approval as Submitted
- [ ] Approval as Noted
- [ ] Resubmittal for Approval
- [ ] Corrections
- [ ] Your Use
- [ ] Review and Comment
- [ ] Record

Bids due on:
Other:

| Qty | Type | MFG | Part |
|---|---|---|---|

26 05 21 Wires and Cables (0-1000 V)-Fire Alarm Cable

STANTEC PROJECT #: 110126045
SUBMITTAL # ELE-014

This review by Stantec is for general conformance with the design concept of Stantec's design of the:
- [ ] Architectural
- [ ] Structural
- [ ] Mechanical
- [x] Electrical
- [ ] Other

component(s) only and does not mean that Stantec has verified or approves the shop drawing(s). The Contractor remains solely responsible for the shop drawing(s) and this review by Stantec does not relieve the Contractor of the Contractor's responsibility for errors or omissions in the shop drawing(s) or for meeting all requirements of the contract documents. This review does not mean that Stantec approves the detailed design inherent in the shop drawing, responsibility for which shall remain with the Contractor submitting same, nor does this review mean that Stantec accepts any deviation of the shop drawing(s) from the contract documents. The Contractor is responsible for confirming all dimensions and correlating them at the job site, for all construction means, methods and techniques, and for coordination of construction work of all trades, including coordination of all shop drawings.

Stantec

- [ ] REVIEWED
- [x] REVIEWED, AS NOTED
- [ ] REVISE AND RESUBMIT
- [ ] NOT REVIEWED

DATE 2019-01-24
BY Konrad Goluch

Minimum wire size as spec 26 05 21 2.4.2.4

**Notes:**
Please review the attached approval drawings carefully. Production cannot be scheduled until a signed copy of the final approved drawing are received. Be aware that once drawings are approved, any errors due to incorrect information are the responsibility of the client.

Do not hesitate to contact me if you have any questions or concerns.

Deca Cables Inc.
150 North Murray Street
P.O. Box 777
Trenton, Ontario K8V 5W6
Canada

Website: www.decacables.com
Telephone: (613) 392-3585
Facsimile: (613) 392-7908
Email: sales@decacables.com

**ISO 9001:2008**

# PRODUCT DATA SHEET

# Part No: 32-1805

## CONSTRUCTION SPECIFICATIONS

| | |
|---|---|
| **Description** | FIRE ALARM 5C 18 AWG UNSH AIA 300V |
| **Conductor** | 18 AWG Solid Bare Copper |
| **Conductor Diameter** | 0.0403" |
| **Insulation Type** | Semi Rigid PVC |
| **Insulation Thickness** | .015" |
| **Conductor Identification** | Black, Red, Green, Blue, Brown |
| **Cable Assembly** | Conductors are cabled together. A PVC jacket is applied over the cabled assembly. An aluminum armour is applied over the inner jacket. An outer PVC jacket is applied over the aluminum armour. |
| **Ripcord** | Polyester Ripcord included under the inner jacket |
| **Inner Jacket** | 0.020" (minimum average), Flame Retardant Red PVC |
| **Armour Type** | Interlocked Aluminum Armour |
| **Outer Jacket** | 0.045" (minimum average), Flame Retardant Red PVC |
| **Overall Cable Diameter** | 0.509" |
| **Jacket Print** | "DECAGUARD" 5C18AWG 105C CSA FAS105 FT4 300V AIA SUN RES LL81646 ---- ROHS work order #, month, year, metre markings (every 1 metre) |

## ELECTRICALS

| | | |
|---|---|---|
| **Voltage** | 300V | |
| **Conductor Resistance** | 6.39 | Ohms/Mft @20C |

## CERTIFICATIONS AND PHYSICAL PROPERTIES

| | | |
|---|---|---|
| **CSA Certified** | *CSA C22.2 No.208 Fire Alarm and Signal Cable | |
| **Flame Test Rating** | CSA FT4 | |
| **Temperature Rating** | 105C | |
| **ROHS** | Compliant | |
| **Cable Weight** | 184 | kg/km |
| **Copper Content** | 37 | kg/km |
| **Max Pull Tension** | 41 | kgs |
| **Min Bending Radius** | 6.25 | inches (installed) |
| **Max Cable Length** | 8475 | metres |

**Date: June 4, 2019**

REVIEWED BY CONTRACTOR
Kudlik Construction Ltd.
NAME: Sandra Rousseau P.Eng
DATE: Jun 04, 2019

# Transmittal

**Arctic Electrical Nunavut Ltd**
PO Box 1381
Iqaluit, Nu.
X0A 0H0
Phone: 867-975-3494
**From: Lee Pitcher**

**Project** **Waste Waste Treatment Plant**
**Location** Iqaluit NU
**To** Kudlik Construction
Contact: Sandra Rousseau P.Eng.
srousseau@kudlik.biz



SE-15R2 SU-ELE15R2
PO-Frontier Power

Attached are the following items:

- [x] Drawings
- [ ] Prints
- [ ] Plans
- [x] Specifications
- [ ] Information
- [ ] Submittals

Other:

THESE ARE TRANSMITTED FOR:

- [ ] Prior Approval
- [ ] Approval
- [ ] Approval as Submitted
- [ ] Approval as Noted
- [x] Resubmittal for Approval
- [ ] Corrections
- [ ] Your Use
- [ ] Review and Comment
- [ ] Record

Bids due on:
Other:

| Qty | Type | MFG | Part |
|---|---|---|---|

26 32 14 Power Generation Diesel-Silencer

STANTEC PROJECT #: 110126045
SUBMITTAL # ELE-15R2 (Generator Silencer)

This review by Stantec is for general conformance with the design concept of Stantec's design of the:

- [ ] Architectural
- [ ] Structural
- [x] Mechanical
- [ ] Electrical
- [ ] Other

component(s) only and does not mean that Stantec has verified or approves the shop drawing(s). The Contractor remains solely responsible for the shop drawing(s) and this review by Stantec does not relieve the Contractor of the Contractor's responsibility for errors or omissions in the shop drawing(s) or for meeting all requirements of the contract documents. This review does not mean that Stantec approves the detailed design inherent in the shop drawing, responsibility for which shall remain with the Contractor submitting same, nor does this review mean that Stantec accepts any deviation of the shop drawing(s) from the contract documents. The Contractor is responsible for confirming all dimensions and correlating them at the job site, for all construction means, methods and techniques, and for coordination of construction work of all trades, including coordination of all shop drawings.

Stantec

- [x] REVIEWED
- [ ] REVIEWED, AS NOTED
- [ ] REVISE AND RESUBMIT
- [ ] NOT REVIEWED

DATE 2019-06-05
BY Brendan Zrum, P.Eng

**Notes:**
Please review the attached approval drawings carefully. Production cannot be scheduled until a signed copy of the final approved drawing are received. Be aware that once drawings are approved, any errors due to incorrect information are the responsibility of the client.

Do not hesitate to contact me if you have any questions or concerns.

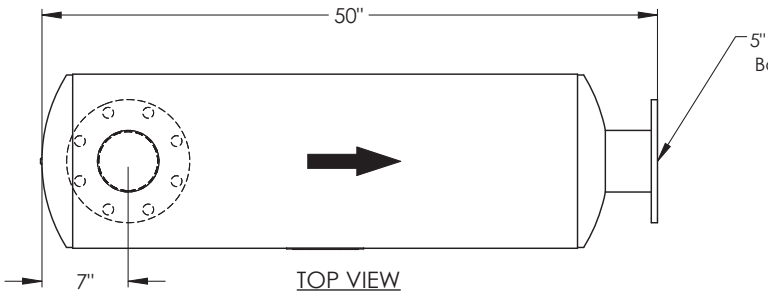


TOP VIEW

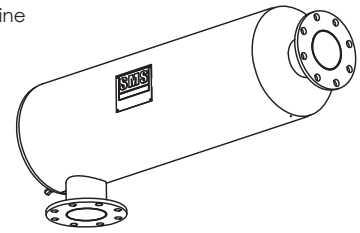


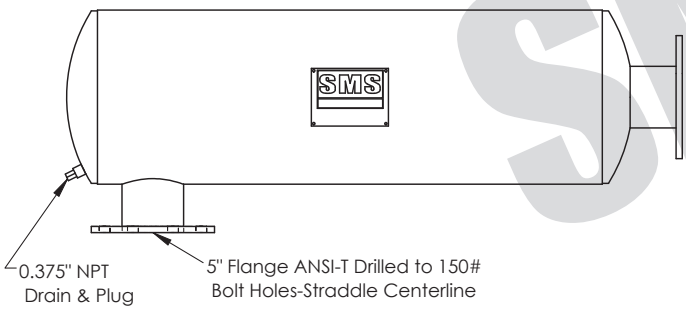


SIDE VIEW

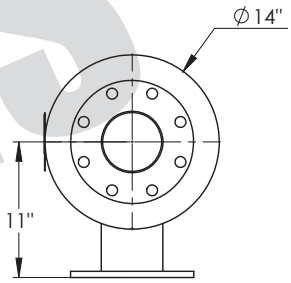


OUTLET END VIEW

P/O # Quote#19710

Standard Specifications

- Material: CS-A36 (44W)
- Uninsulated
- Tolerance— 1/8"; ∠ ±2°
- Finish:
  1,100 F High Heat Black Paint
- Tolerance: ±1/8"
- Weight: 85 lbs

All dimensions are in inches (") unless otherwise stated. Do not scale.

| | | | | |
|---|---|---|---|---|
| Title: 5" Cylindrical Silencer -Standard- Critical Grade (25-30 dBA) Side In-End Out-Carbon Steel | Dwg.Nbr | Revision | Plot Scale | NTS |
| | SM2-5 | 0 | Format | A |
| | | | Date | 05/22/2019 09:01:39 |
| Client/Project: Frontier Power WWTP W.O # Quote#19710 | | | | |

SMS SILENCERS RESERVES THE PROPIETARY RIGHTS TO THIS DRAWING AND THE DATA SHOWN THEREON AND IS SUBMITTED IN CONFIDENCE ONLY. SAID DRAWING AND/OR DATA ARE NOT TO BE USED OR REPRODUCED FOR ANY PURPOSE WITHOUT WRITTEN CONSENT OF SMS SILENCERS

www.smssilencers.com
sales@smssilencers.com
Tel: 905-459-1512
Fax: 905-459-3138
15 Bramalea Raod Unit#7
Brampton, ON
L6T 2W4

SMS SILENCERS INC.

V.1.0 Dec 10 2016

Project ID# 26110-Brent | Dwg ID# 26111

SMS SILENCERS INC.

SMS Silencers Inc.
7-15 Bramalea Rd.
Brampton, ON, Canada L6T 2W4

Toll Free 800 459 1512
Phone 905 459 1512
Fax 905 459 3138

**Company Info**

Frontier Power Products Ltd.
7983 Progress Way
Delta, BC
V4G 1A3, Canada

Prepared by: Brent MacMillan

**Contact info**

Will Osburn
wosburn@frontierpower.com

# WWTP

| | |
|---|---|
| Genset Manufacturer: | Caterpillar |
| Genset Model: | G3306TA - 220bhp |
| Engine Manufacturer: | Caterpillar |
| Engine Model: | G3306TA |

## Engine Information

| | | | | | | | |
|---|---|---|---|---|---|---|---|
| **Exhaust Flow:** | 967.00 ACFM | **Max BP:** | 27.00 in wg | **Temp:** | 1000.00 Fahrenheit | **KW:** | 165 |
| **Number of Outlets:** | 1 | **Outlet Diameter:** | 5.00 | **Flex Length:** | 18.00 | **Fuel Type:** | Other |

## Engine Octave Band

Engine Exhaust: Sound Pressure Level (LP) measured @ 1.00 m in dB

| 60 Hz | 125 Hz | 250 Hz | 500 Hz | 1 KHz | 2 KHz | 4 KHz | 8 KHz | dB | dBA |
|---|---|---|---|---|---|---|---|---|---|
| 106.00 | 108.00 | 99.00 | 98.00 | 97.00 | 96.00 | 95.00 | 95.00 | 111.22 | 103.51 |

## Catalytic Converter IL.

No Catalytic Converter sound data is given.

## Exhaust Back Pressure Detail

No User Selection for Exhaust data is made.

## Silencer(s) Sizing Result

Silencer(s) Results below is based on user Selection of One Silencer using SMS Default dBA correction & Near Field Distance attenuation:

Recommended Minimum Outlet Size 4"

| Silencer Part # | Description | Outlet Size | Back Pressure |
|---|---|---|---|
| SM2-5-SIEO | 5" Critical Grade Cylindrical Silencer (25-30 dBA) | 5 in | 5.13 in wg |
| Silencer(s) | | | **5.13 in wg** |
| Qty : 1 Flex Dia : 5.00 Flex Length 18.00" | | Flex Connector : | 0.20 in wg |

Exhaust Velocity = 7,095.00 ft/min OR 36 m/s

## Octave Band

| Octave Band | 63 Hz | 125 Hz | 250 Hz | 500 Hz | 1 kHz | 2 kHz | 4 kHz | 8 kHz | dB | dBA |
|---|---|---|---|---|---|---|---|---|---|---|
| Engine SPL @ 1 m | 106.00 | 108.00 | 99.00 | 98.00 | 97.00 | 96.00 | 95.00 | 95.00 | 111.22 | 103.51 |
| Silencer #1 : SM2 dB @ 1 m | 16.00 | 27.00 | 30.00 | 29.00 | 25.00 | 21.00 | 20.00 | 20.00 | 34.74 | 30.85 |
| Catalytic Converter IL. | 0.00 | 0.00 | 0.00 | 0.00 | 0.00 | 0.00 | 0.00 | 0.00 | 0.00 | 0.00 |
| dBA reduction correction | 0.00 | 0.00 | 0.00 | 0.00 | 0.00 | 0.00 | 0.00 | 0.00 | | |
| Resulting SPL @ 1 m | 90.00 | 81.00 | 69.00 | 69.00 | 72.00 | 75.00 | 75.00 | 75.00 | 90.98 | 81.21 |
| Distance Attenuation dB | 10.14 | 10.14 | 10.14 | 10.14 | 10.14 | 10.14 | 10.14 | 10.14 | | |
| Resulting SPL @7.00 m | 79.86 | 70.86 | 58.86 | 58.86 | 61.86 | 64.86 | 64.86 | 64.86 | 80.84 | 71.07 |

Calculated noise level is based on free field conditions.
No site conditions and no calculation safety factors are taken into consideration.
Typical resulting noise tolerance is +/- 5dBA. No noise result guarantees are implied.

**Date: June 11, 2019**

REVIEWED BY CONTRACTOR
Kudlik Construction Ltd.
NAME: Sandra Rousseau P.Eng
DATE: Jun 11, 2019

# Transmittal

**Arctic Electrical Nunavut Ltd**
PO Box 1381
Iqaluit, Nu.
X0A 0H0
Phone: 867-975-3494
**From: Lee Pitcher**



SE-16R2
PO-Guillevin-P19-078

**Project** **Waste Waste Treatment Plant**
**Location** Iqaluit NU
**To** Kudlik Construction
Contact: Sandra Rousseau P.Eng.
srousseau@kudlik.biz

Attached are the following items:

- [x] Drawings
- [ ] Prints
- [ ] Plans
- [x] Specifications
- [ ] Information
- [ ] Submittals

Other:

THESE ARE TRANSMITTED FOR:

- [ ] Prior Approval
- [ ] Approval
- [ ] Approval as Submitted
- [ ] Approval as Noted
- [x] Resubmittal for Approval
- [ ] Corrections
- [ ] Your Use
- [ ] Review and Comment
- [ ] Record

Bids due on:
Other:

| Qty | Type | MFG | Part |
|---|---|---|---|

26 12 17 Distribution Transformer

Provide a shop drawing for the 45kVA transformer

STANTEC PROJECT #: 110126045
SUBMITTAL # ELE-016-R2

This review by Stantec is for general conformance with the design concept of Stantec's design of the:

- [ ] Architectural
- [ ] Structural
- [ ] Mechanical
- [x] Electrical
- [ ] Other

component(s) only and does not mean that Stantec has verified or approves the shop drawing(s). The Contractor remains solely responsible for the shop drawing(s) and this review by Stantec does not relieve the Contractor of the Contractor's responsibility for errors or omissions in the shop drawing(s) or for meeting all requirements of the contract documents. This review does not mean that Stantec approves the detailed design inherent in the shop drawing, responsibility for which shall remain with the Contractor submitting same, nor does this review mean that Stantec accepts any deviation of the shop drawing(s) from the contract documents. The Contractor is responsible for confirming all dimensions and correlating them at the job site, for all construction means, methods and techniques, and for coordination of construction work of all trades, including coordination of all shop drawings.

Stantec

- [ ] REVIEWED
- [x] REVIEWED, AS NOTED
- [ ] REVISE AND RESUBMIT
- [ ] NOT REVIEWED

DATE 2019-06-12
BY Jamie McLeish

**Notes:**
Please review the attached approval drawings carefully. Production cannot be scheduled until a signed copy of the final approved drawing are received. Be aware that once drawings are approved, any errors due to incorrect information are the responsibility of the client.

Do not hesitate to contact me if you have any questions or concerns.

# HPS Sentinel ® K

Hammond Power Solutions

Energy Efficient Distribution Transformer

Transformateur de Distribution à Bon Rendement Énergétique

Guelph, ONT
Compton, CA

Baraboo, WI
Monterrey, MX

Part No. SK3A0112PB4KB

® LR 3902

DRY TYPE TRANSFORMER 77U5 E112313 LISTED

ALSO VERIFIED IN ACCORDANCE TO ENERGY STANDARD C802.2-12

| | | | |
|---|---|---|---|
| Cust. Ref. / Ref. du Client | | Serial No. / No. de Serie | |
| Phase | 3 | HV/HT | 600V 108.3A |
| Type | K | BIL | 10 kV |
| Cooling / Refroidissement | ANN | Term / Bornes | H1 H2 H3 |
| kVA | 112.5 | LV/BT | 208Y/120V 312A |
| Temp. Rise / Echauffement | 80 °C | BIL | 10 kV |
| Temp Class / Classe Temp | 220 °C | Term / Bornes | X0 X1 X2 X3 |
| Winding / Enroulement | CU | Energy / Regulations | DOE 10 CFR PART 431:2016 |
| Frequency / Frequence Hz | 60 | Reglements de / Energetique | CEE ACT SOR/2018-201 |
| Impedance % @ 100 °C | 3.4 | Suitable for non-sinusoidal current load with K-factor not to exceed / Convient à des courants non-sinusoïdaux avec facteur K n'excédant pas | 4 |
| Encl Type / Type De Coffrage | 3R | | |
| Wt LBS / Poids en lbs | 950 | | |

| VOLTS | CURRENT / COURANT | % RATED VOLTAGE / % TENSION NOMINALE | CONNECTION EACH PHASE / CONNEXION PAR PHASE |
|---|---|---|---|
| 630 | 103.1 | 105 | 1 |
| 615 | 105.6 | 102.5 | 2 |
| 600 | 108.3 | 100 | 3 |
| 585 | 111 | 97.5 | 4 |
| 570 | 114 | 95 | 5 |
| 555 | 117 | 92.5 | 6 |
| 540 | 120 | 90 | 7 |

SPACINGS BETWEEN ANY VENTILATED ENCLOSURE PANEL AND ANY ADJACENT WALL SHALL BE A MINIMUM OF 5 INCHES EXCEPT WHEN WALL MOUNTED USING APPROVED WALL MOUNTING KIT

ELECTROSTATIC SHIELD

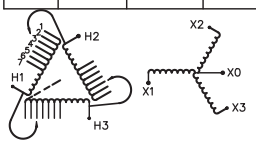


SEISMIC QUALIFICATIONS, OSP-0136-10
AS FLOOR MOUNT ONLY
IBC 2012/ASCE 7-10
SDS<=2.0g Z/h=1 Ip=1.5

d000187hb

Hammond Power Solutions Inc.

TITLE: 3PH DISTRIBUTION TRANSFORMER NAMEPLATE INFORMATION

| NO. | DATE | BY | REVISION |
|---|---|---|---|
| | | | |

DES: PPICASSI
DATE: 19/05/24
SCALE: NTS

SHEET 1 OF 3

EDB SK3A0112PB4KB

0.0 ppicassinos 2019/05/24 09:34

FRONT VIEW

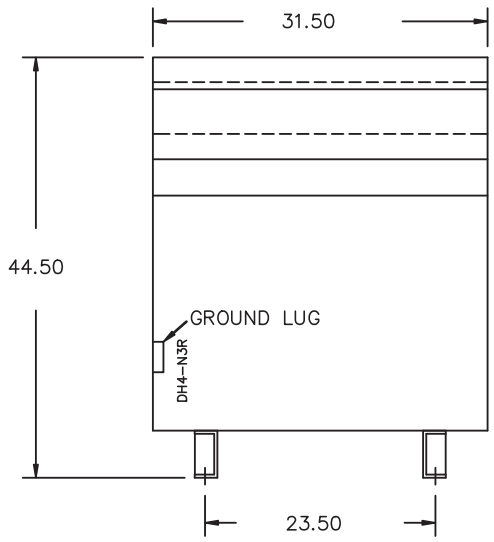


SIDE VIEW

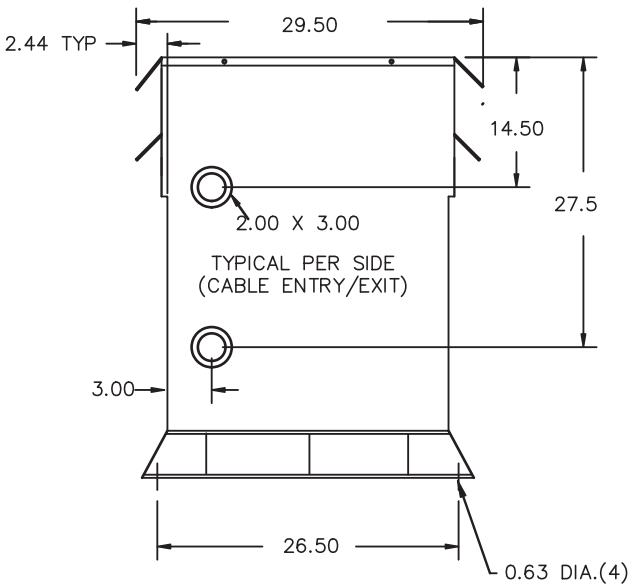


All Dimensions in inches

ENCLOSURE COLOR :ANSI 61 GREY – OUTDOOR

HV TERMINAL DETAIL

MECHANICAL TYPE LUGS INCLUDED
SUITABLE FOR 250MCM–6 CU/AL
CONDUCTORS
1 CONDUCTOR PER PHASE

LV TERMINAL DETAIL

MECHANICAL TYPE LUGS INCLUDED
SUITABLE FOR 350MCM–6 CU/AL
CONDUCTORS
2 CONDUCTORS PER PHASE

CUSTOMER NOTES:

– HV TERMINATED AT TOP FRONT
– LV TERMINATED AT BOTTOM FRONT
200% RATED NEUTRAL X0 HAS QTY 2 LUGS

Hammond Power Solutions Inc.

TITLE: 3PH DISTRIBUTION TRANSFORMER

| NO. | DATE | BY | REVISION |
|---|---|---|---|
| | | | |
| | | | |

DES: PPICASSI
DATE: 19/05/24
SCALE: NTS

SHEET 2 OF 3

EDB SK3A0112PB4KB

0.0 ppicassinos 2019/05/24 09:34

ENCLOSURE BOTTOM VIEW

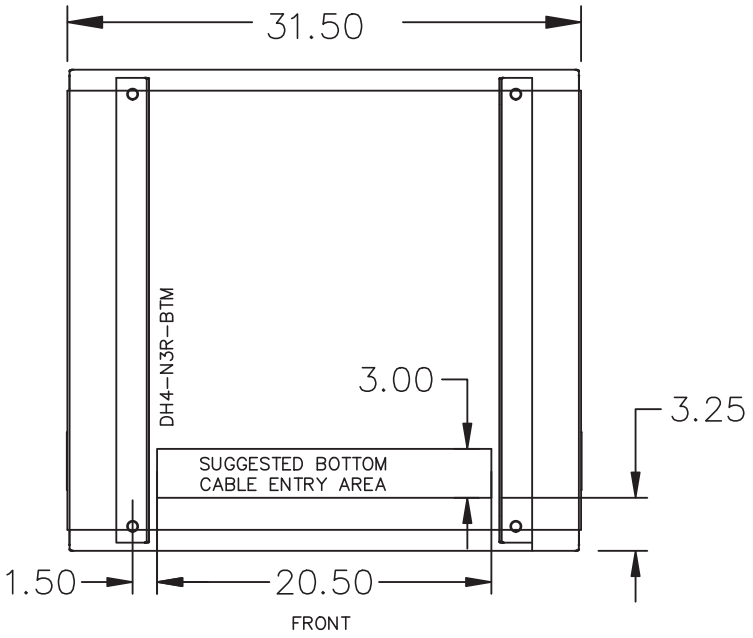


NOTE:
WHEN BOTTOM CABLE ENTRY IS OPTED, THE SPACE USED FOR CONDUITS IN THE FRONT OF THE TRANSFORMER SHOULD NOT OBSTRUCT MORE THAN 50% OF THE FRONT AIR INTAKE AREA DEFINED BETWEEN THE BOTTOM PLATE AND THE SUPPORTING LEGS.
SEE MANUAL FOR ADDITIONAL INFORMATION

Hammond Power Solutions Inc.

TITLE: 3PH DISTRIBUTION TRANSFORMER
ENCLOSURE BOTTOM VIEW

| NO. | DATE | BY | REVISION |
|---|---|---|---|
| | | | |
| | | | |

DES: PPICASSI
DATE: 19/05/24
SCALE: NTS

SHEET 3 OF 3

EDB SK3A0112PB4KB

0.0 ppicassinos 2019/05/24 09:34

# ACCESSORIES (for transformers listed in sections 3, 4, 7, 10 and 11)

## ANTI-VIBRATION PAD AND VIBRATION ISOLATOR KITS

All standard transformers come with installed internal vibration absorbing pads to minimize noise during operation. Optional external "anti-vibration" pad and "vibration isolator" (for higher noise dampening) kits can be used to reduce operating noise even further. All are resistant to industrial contaminants like oils, acids and alkalies.

### ANTI-VIBRATION PAD KITS

| Part No. | Case Style | Description |
|---|---|---|
| **P1** | NH Series | Set of four (4) rubber anti-vibration pads which replace the standard steel enclosure washers. |
| **P2** | NJ Series | |



**All Anti-Vibration Pad kits and Vibration Isolator kits contain a set of four (4) pads or isolators. Therefore only one kit is required per transformer.**

### VIBRATION ISOLATOR KITS

| Part No. | Transformer Weight (Lb) | Description |
|---|---|---|
| **NMP1** | Up to 340 lbs | Set of four (4) molded neoprene and steel plate assemblies that virtually eliminate vibration noise between the transformer and the mounting surface. |
| **NMP2** | 341 to 680 lbs | |
| **NMP3** | 681 to 1040 lbs | |
| **NMP4** | 1041 to 1740 lbs | |
| **NMP5** | 1741 to 2330 lbs | |
| **NMP6** | 2331 to 3450 lbs | |
| **NMP7** | 3451 to 4690 lbs | |

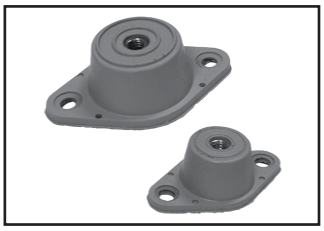

# ACCESSORIES (for transformers listed in sections 8 and 10)

## NQTW1 and NQTW2 Wall Mounting Kits

The **NQTW1 and NQTW2** wall mounting kits are specifically designed for HPS commercial or industrial encapsulated (potted) distribution transformer units up to a maximum of 45kVA or 800 pounds (363 kg). These mounting kits are designed for encapsulated (potted) units only, no drip plate is included/required. Please contact HPS customer service if you have any questions.

**Note:** Always measure and secure mounting brackets to the wall surface first, then lift the transformer (using appropriate lifting equipment) onto the brackets and attach using minimum Grade 8 hardware.

| Enclosure Case Style | Mounting Type | Wall Mounting Kit Part Number |
|---|---|---|
| NQ0-NQ8 | Wall | **Included** |
| NQS10 | Wall or Floor | **NQTW2** |
| NQT3-NQT6 | Wall | **Included** |
| NQT7-NQT8 | Wall or Floor | **NQTW1** |
| NQT9A | Floor | **N/A** |
| NQT9* | Wall or Floor | **NQTW2** |

*Applies to HPS Fortress line only.

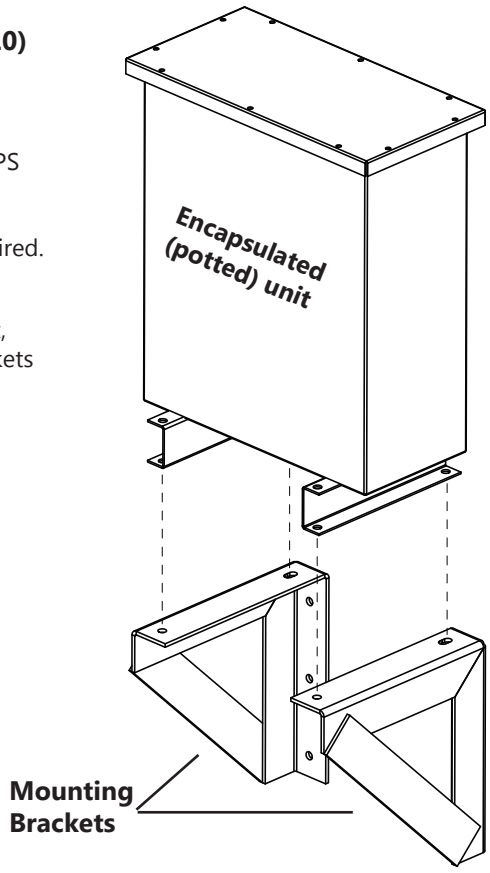





© Hammond Power Solutions Inc.
Data subject to change without notice.

**Date: May 10, 2019**

REVIEWED BY CONTRACTOR
Kudlik Construction Ltd.
NAME: Sandra Rousseau P.Eng
DATE: Mai 13, 2019

# Transmittal

**Arctic Electrical Nunavut Ltd**
PO Box 1381
Iqaluit, Nu.
X0A 0H0
Phone: 867-975-3494
**From: Lee Pitcher**



SE-17
P19-078-Guillevin

**Project** **Waste Waste Treatment Plant**
**Location** Iqaluit NU
**To** Kudlik Construction
Contact: Sandra Rousseau P.Eng.
srousseau@kudlik.biz

Attached are the following items:

- [x] Drawings
- [ ] Prints
- [ ] Plans
- [x] Specifications
- [ ] Information
- [ ] Submittals

Other:

THESE ARE TRANSMITTED FOR:

- [ ] Prior Approval
- [x] Approval
- [ ] Approval as Submitted
- [ ] Approval as Noted
- [ ] Resubmittal for Approval
- [ ] Corrections
- [ ] Your Use
- [ ] Review and Comment
- [ ] Record

Bids due on:
Other:

| Qty | Type | MFG | Part |
|---|---|---|---|

Distribution-Switchboard/Panelboards

STANTEC PROJECT #: 110126045
SUBMITTAL # ELE-016 rev 1

This review by Stantec is for general conformance with the design concept of Stantec's design of the:
- [ ] Architectural
- [ ] Structural
- [ ] Mechanical
- [x] Electrical
- [ ] Other

component(s) only and does not mean that Stantec has verified or approves the shop drawing(s). The Contractor remains solely responsible for the shop drawing(s) and this review by Stantec does not relieve the Contractor of the Contractor's responsibility for errors or omissions in the shop drawing(s) or for meeting all requirements of the contract documents. This review does not mean that Stantec approves the detailed design inherent in the shop drawing, responsibility for which shall remain with the Contractor submitting same, nor does this review mean that Stantec accepts any deviation of the shop drawing(s) from the contract documents. The Contractor is responsible for confirming all dimensions and correlating them at the job site, for all construction means, methods and techniques, and for coordination of construction work of all trades, including coordination of all shop drawings.

Stantec

- [ ] REVIEWED
- [x] REVIEWED, AS NOTED
- [ ] REVISE AND RESUBMIT
- [ ] NOT REVIEWED

DATE 2019-05-14
BY Konrad Goluch

SPD to be connected to the panel busbar using circuit breaker size as indicated on drawings.
Bus bar bigger than specified - not action required.

**Notes:**
Please review the attached approval drawings carefully. Production cannot be scheduled until a signed copy of the final approved drawing are received. Be aware that once drawings are approved, any errors due to incorrect information are the responsibility of the client.

Do not hesitate to contact me if you have any questions or concerns.

# IQALUIT WASTE WATER TREATMENT UPGRADE

## Approval Drawing Package

### Factory Order #: 41753775

05/09/2019

Distributor:
Guillevin

Contractor/Installer:
Artic Electric

Chris Saucier
Sales Representative

Phillip Hogel
Project Manager
North American Operating Division
613-688-4117
phillip.hogel@se.com

Life Is On Schneider Electric

# Submittal Comments

Date: 05/09/2019

Job Name: IQALUIT WASTE WATER TREATMENT UPGRADE

Factory Order #: 41753775

Contractor Name: ARCTIC ELECTRIC

☐ **Approval**
> Release all manufacture
No re-submittal required

☐ **Rejected**
> No release
Re-submit all

☐ **Approved as Noted**
> Release all for manufacture.
Make necessary changes, show
Changes on construction Drawings

☐ **Partial Approval**
**Revise and Resubmit**
> Release approved sections for manufacture
Re-submit rejected section

**The following information is pertinent with the return of this submittal. Please initial the applicable items that you have reviewed and have determined to be correct.**

_____ > Lug sizes

_____ > Top or bottom entry for all equipment

_____ > Shipping splits

_____ > Nameplate information

_____ > Orientation of breakers

_____ > Wire sizes

_____ > Amperages of all bus and breakers

_____ > Surface or flush for panels

_____ > Size of all equipment

_____ > AIC ratings

_____ > Copper or aluminum bus

**Customer Comments/Rejected Items:**

Contractors Signature or Stamp:

_____

Schneider Electric

# Approval Drawings

This Approval Drawing Package is submitted as our interpretation of the contract drawings and/or the specifications for this job.

It is the obligation of the electrical contractor and reviewing engineer to determine that the item quantities and accuracy of this submittal is correct as required for the job. Any inaccuracies or deviations must be addressed with Schneider Electric before release to manufacturing. Any releases of material to manufacturing by the above parties constitute an acceptance of the accuracy of the submittal. Any changes after release will be viewed as a change order, subject to pricing changes.

Please take the time to review this package for accuracy to prevent any after-shipment problems. This will allow the job to be shipped correctly and prevent any delay in energization.

Schneider Electric

Good day,

Schneider Electric is committed to delivering your equipment in good condition.

You are the documented receiver for the shipments on the project contained in this Approval Drawing Package.

Please be sure to receive each shipment correctly.

1: Review that material and check the quantities

2: Check for damage to any of the materials before signing the waybill.

If you see damage, or suspect there might be damage, indicate “Damaged” on the waybill. Take pictures of the damage, and contact your Schneider Electric representative for instructions.

- If you sign the waybill without noting the damage, you are accepting the shipment as complete and undamaged.
- Any damage reported after the waybill is signed will be your responsibility.

If you find concealed damage within 24 hours of receiving the shipment, call the carrier.

- Report the damage, and ask for an inspection by the carrier.

Thank you for working with Schneider Electric to ensure you have completed and undamaged shipments.

Schneider Electric

# TABLE OF CONTENTS


## SWITCHBOARD

***BILL OF MATERIALS AND DRAWINGS***

MDP-1

***LITERATURE***

Power-Style QED-2 Switchboard Brochure

Internal Modular SPD - Brochure

PowerLogic PM8000 Series Intermediate Metering Technical Data Sheet

PK Circuit Breaker Information

Micrologic Trip Units for PowerPact Circuit Breakers Brochure

## PANELBOARDS

***BILL OF MATERIALS AND DRAWINGS***

***LITERATURE***

NQ Panelboard Handout

NQ SurgeLoc Internally Mounted SPDs

## SERVICES

***BILL OF MATERIALS***

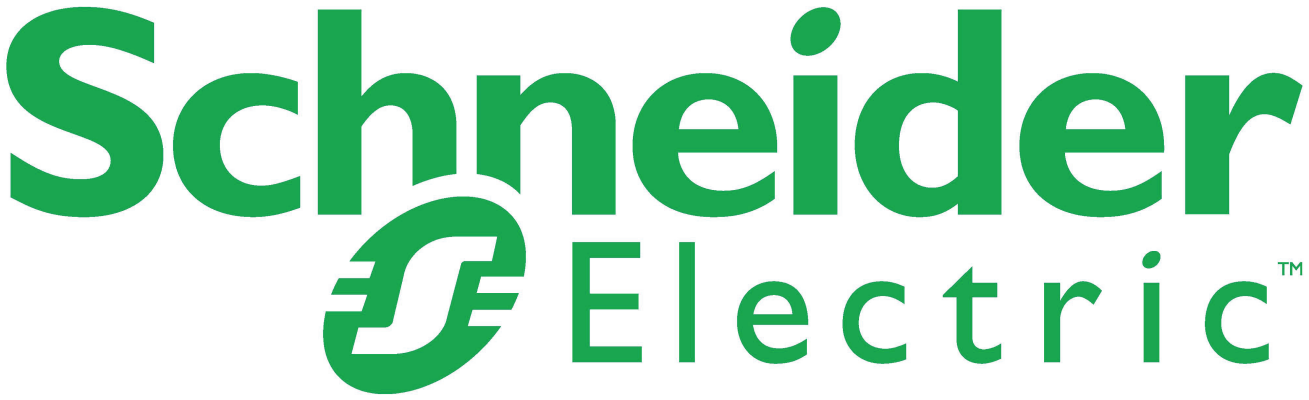


# SWITCHBOARD

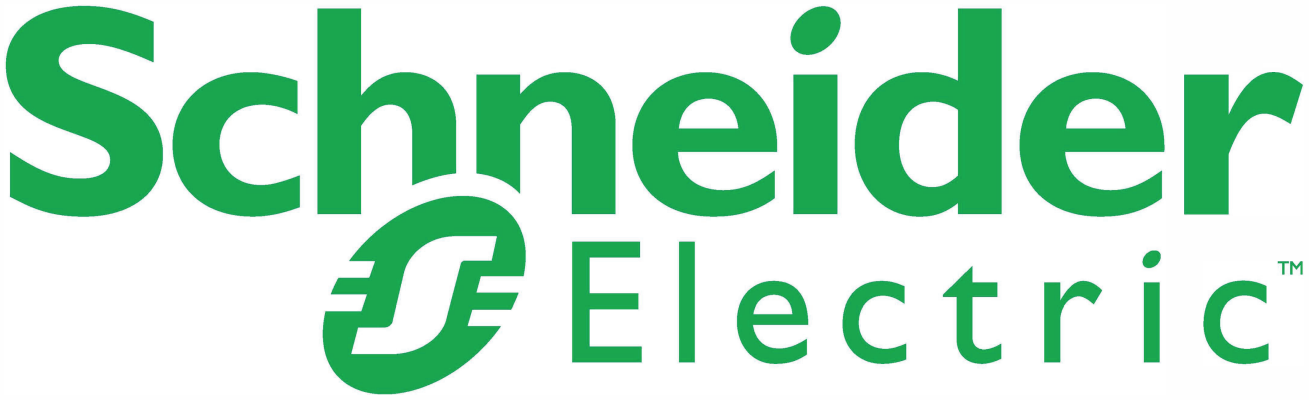


# BILL OF MATERIALS AND DRAWINGS

| | | |
|---|---|---|
| **Q2C Number:** 41753775 | **Quote Number:** 2 | **Revision Number:** 1 |
| **Project Name:** IQALUIT WASTE WATER TREATMENT UPGR | | **Quote Name:** |

| Item No. | Qty. | Catalog Number / Details |
|---|---|---|

# SWITCHBOARD

001-00 1

**Designation:** MDP-1
Square D Custom Swbd
QED-2 Switchboard
---
Square D Custom Swbd
Designed and Tested in accordance with:
CSA C22.2 NO. 31
System Voltage - 600Y/347V 3Ph 4W 60Hz
System Ampacity - 800A
Source Description - Single Main
Bussing - Silver Plated Copper
Neutral Bus - 100%
Max Available Fault Current (RMS) - 22kA
Enclosure - Type 2
Drip Hood(s)
Accessibility: Front and Rear
Exterior Paint Color - ANSI 49
Ground Lug provided for each device
Copper Ground Bus
Certified Test Report Required
Seismic Qualified

Dimensions
---
1 - 24" Wide Section(s)
2 - 36" Wide Section(s)
3 - 24" Deep Enclosure(s)
Dimensions: 96.00" W X 24" Max D X 91.5" H
Approximate Weight: 2071.00 lbs / 939.41 kgs

Incoming Requirements
---
Suitable As Service Entrance
Entry Point: Left of Lineup, Through the Bottom
Connection Type: Cable in Bussed Auxiliary
SPD with Surge Rating 240kA
SPD Dry Contacts
Includes Surge Counter
Utility C/T Comp. per: IQALUIT
Provision for Utility CT's/PT's,
C/T Type - MV-7
Power Meter - PM8244
3 CTs PM8244 w/ Display - 3 phase 4 wire wye 800A

Mains
---
1 - 800AS/400AT 600V 100% Rated 50 kA 3 Pole UL, Fixed Mounted Electronic Trip Circuit Breaker: Type PK
Ammeter Trip Unit, Long Time, Short Time, Instantaneous
Padlock Attachment

Feeders
---
2 - 100AT 600V 80% Rated 25 kA 3 Pole UL, Group Mounted Thermal Magnetic Circuit

| Item No. | Qty. | Catalog Number / Details |
|---|---|---|
| | | Breaker: Type BJ<br>1 - 150AT 600V 80% Rated 25 kA 3 Pole UL, Group Mounted Thermal Magnetic Circuit Breaker: Type HJ<br>2 - 200AT 600V 80% Rated 25 kA 3 Pole UL, Group Mounted Thermal Magnetic Circuit Breaker: Type JJ<br>1 - 250AT 600V 80% Rated 25 kA 3 Pole UL, Group Mounted Thermal Magnetic Circuit Breaker: Type JJ<br>1 - 60AT 600V 80% Rated 25 kA 3 Pole UL, Group Mounted Thermal Magnetic Circuit Breaker: Type BJ<br>Common Feeder Features:<br>Padlock Attachment |

SQUARE D
by Schneider Electric

| | | | |
|---|---|---|---|
| Job Name: | IQALUIT WASTE WATER TREATMENT UPGR | Square D Quotation #: | 41753775 |
| Job Location: | OTTAWA, ON | Quotation Revision #: | |
| | | Sales Contact: | Michael Childs |
| | | Sales Contact Location: | 806 |
| Purchaser: | 92941–GUILLEVIN INT'L INC. (V4990) | Customer: | ARCTIC ELECTRIC |
| Purchaser PO #: | 2010–ROV975139D | Customer PO #: | |
| User: | | Architect: | |
| User Location: | | Cons. Engineer: | |
| Drawing Status: | APPROVAL | | |

# TABLE OF CONTENTS

SQUARE D FACTORY ORDER NUMBER: 41753775–001


| Equipment Designation | Equipment Type | Drawing Type | Drawing Number | Page | Revision Level |
|---|---|---|---|---|---|
| MDP–1 | QED–2 SWITCHBOARD | ELEVATION VIEW | F41753775–001–01 | 1 | – |
| | | SIDE, TOP VIEW & FLOOR PLAN | F41753775–001–01 | 2 | – |
| | | CENTER OF GRAVITY | F41753775–001–01 | 3 | – |
| | | ONE LINE | 041753775–001–01 | 1 | – |
| | | SCHEDULE | 041753775–001–01 | 2 | – |
| | | ELEMENTARY DIAGRAMS | E41753775–001–03 | 1 | – |
| | | | E41753775–001–09 | 1 | – |
| | | ISOMETRIC VIEW/COMPARTMENT DESIGNATION | I41753775–001–01 | 1 | – |

| REV | DESCRIPTION | BY | DATE | | | | | | | | |
|---|---|---|---|---|---|---|---|---|---|---|---|
| – | ---- | -- | --/--/-- | – | ---- | -- | --/--/-- | – | ---- | -- | --/--/-- |
| | | | | – | ---- | -- | --/--/-- | – | ---- | -- | --/--/-- |

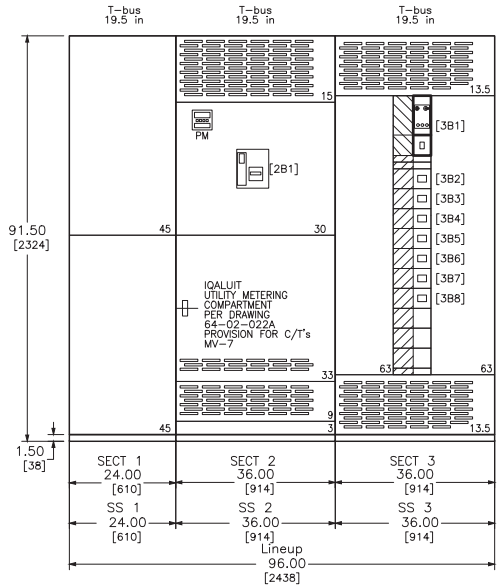


## SWITCHBOARD GENERAL NOTES

### PRODUCT DESCRIPTION & RATINGS

**Power System Data**

600Y/347V 3Ph 4W 60Hz / 3 Phase Wye
Solidly Grounded
System Short Circuit Current Rating: 22kA RMS
Incoming Section 1 Cable Through the Bottom Left of Lineup

**Bus System Data**

800A Silver Plated Copper Main Bus
(1) .25x.875 IN/6x22 mm Cu Ground Bus

**Enclosure Data**

Type 2 Free Standing
Driphoods
Exterior Paint Color: ANSI 49
Front & Rear Accessibility Required
Handling: Rollers & Lifting Assemblies
Utility Sealing hardware installed on the line side

**Estimated Shipping Weight**

Shipping Split 1 559.00 lbs / 253.56 kgs
Shipping Split 2 1112.80 lbs / 504.76 kgs
Shipping Split 3 1020.50 lbs / 462.89 kgs
Complete Lineup 2692.30 lbs / 1221.21 kgs

**Code Standards**

CSA C22.2 NO. 31
Suitable for Service Entrance
Not Suitable for Mounting on Combustible Floor

**Rating Nameplates**

ST1-Section Bus 800A
ST2-Section Bus 800A
ST3-Section Bus 800A

### PRODUCT INFORMATION

**Wiring**

All Gray SIS Wire and Min Size #14 Unless Otherwise Noted, and #12 Ground Wire.
NOTE: (90 Deg. C) insulated conductors must be sized per the (75 Deg. C) column of the CE Code Tables.
Except the supply cables entering Section 1, (Incoming Wireway) may be sized per the (90 Deg. C) column of the CE Code Tables.

**Instruction Bulletins**

Reference 80043-055 For Handling, Installation, Anchoring, Inspection And Maintenance Information

**Product Accessories/Options**

Certified Test Report
Seismic Qualified

DUAL DIMENSIONS: INCHES / MILLIMETERS

*41753775001001*

| | | | |
|---|---|---|---|
| JOB NAME: | IQALUIT WASTE WATER TREATMENT UPGR | EQUIPMENT DESIGNATION: | MDP-1 |
| JOB LOCATION: | OTTAWA ON | EQUIPMENT TYPE: | QED-2 SWITCHBOARD |
| DRAWN BY: | RANJITHA B | DRAWING TYPE: | ELEVATION VIEW |
| ENGR: | JOSEPH HADCHITI ENG. | | |
| DATE: | MAY 03, 2019 | | |
| DRAWING STATUS: | APPROVAL | DWG# | F41753775-001-01 |

PG 1 OF 3 | REV –

| REV | DESCRIPTION | BY | DATE | – | ---- | -- | --/--/-- | – | ---- | -- | --/--/-- |
|---|---|---|---|---|---|---|---|---|---|---|---|
| – | ---- | -- | --/--/-- | – | ---- | -- | --/--/-- | – | ---- | -- | --/--/-- |

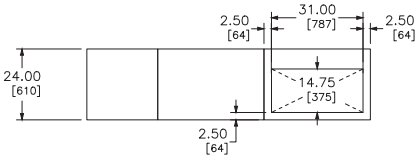


TOP VIEW – FRONT

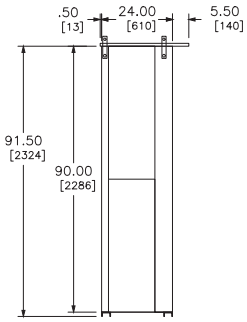


LEFT SIDE VIEW

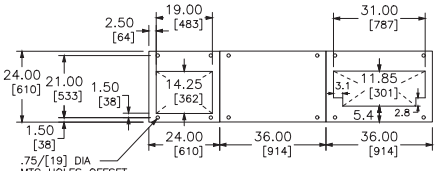


FLOOR PLAN – FRONT

NOTE: ALL DEVICES REQUIRING DRILLING OR INSERTION IN MOUNTING PAD SUCH AS CONDUIT, ANCHORING STUDS, SLEEVE INSERTS, ETC. SHOULD BE INSTALLED BEFORE SETTING EQUIPMENT IN PLACE.

DUAL DIMENSIONS: INCHES MILLIMETERS

| | | | |
|---|---|---|---|
| JOB NAME: | IQALUIT WASTE WATER TREATMENT UPGR | EQUIPMENT DESIGNATION: | MDP-1 |
| JOB LOCATION: | OTTAWA ON | EQUIPMENT TYPE: | QED-2 SWITCHBOARD |
| DRAWN BY: | RANJITHA B | DRAWING TYPE: | SIDE, TOP VIEW & FLOOR PLAN |
| ENGR: | JOSEPH HADCHITI ENG. | | |
| DATE: | MAY 03, 2019 | | |
| DRAWING STATUS: | APPROVAL | DWG# | F41753775-001-01 |

PG 2 OF 3 REV –

*41753775001001*

| REV | DESCRIPTION | BY | DATE | – | ---- | -- | --/--/-- | – | ---- | -- | --/--/-- |
|---|---|---|---|---|---|---|---|---|---|---|---|
| – | ---- | -- | --/--/-- | – | ---- | -- | --/--/-- | – | ---- | -- | --/--/-- |

## REQUIREMENTS FOR SEISMIC RATING

ANCHORING CONDITIONS:

To Maintain Seismic Qualifications, Equipment Must Be Installed Per Manual (See General Notes) And Per Any Seismic Anchoring Details Provided By Others. Do Not Install Equipment Before Approved Seismic Anchoring Details Have Been Obtained And Site Prepararations Have Been Made In Accordance With The Approved Seismic Anchoring Details. All Post–Installed Anchors Shall Be Approved For Seismic Loads.

Consideration Must Be Made For Conduit Entry Into Each Section When Developing Mounting Pad Reinforcement Locations. See Conduit Entry Details (Floor Plan) For Dimensional Information.

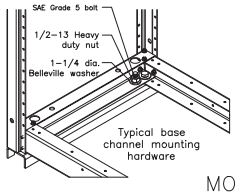


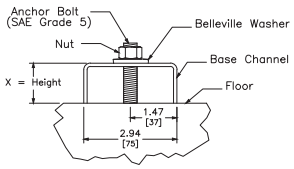


MOUNTING DETAILS

Each Section Must Be Anchored At All Locations (Refer To Floor Plan And Mounting Detail Above). Anchor Bolt Mounting Points Are .75/[19] Digmeter Holes Located 1.50/[38] Or 3.00/[76] Above The Base of the Section. Use Dimensions From The Floor Plan To Determine Mounting Locations.

The Belleville Washer (Shown In Detail Above) Used For Anchoring Connections Is A Tested Component And Is Required To Maintain Position Retention Of The Equipment. The Slip Critical Connection Performance Of The Bolted Connection Was Established To The Shake Table Tested Seismic Capacity Of The Equipment As Shown On The Equipment Seismic Certificate Supplied At The Time Of Order.

CENTER OF GRAVITY CALCULATIONS:

Elevation Center Of Gravity: 55 in. (1387.00mm) Up From Floor
Vertical Center Of Gravity: Use Centerline Of Section From Left To Right
Depth Center Of Gravity: Use CenterLine Of The Section From Front To Rear

SECTION WEIGHT:

The Weights Given Below Are The Maximum For Each Section And Should Be Used For Calculating Seismic Anchoring Requirements

Section 1 559.00 lbs / 253.56 kgs
Section 2 1112.80 lbs / 504.76 kgs
Section 3 1020.50 lbs / 462.89 kgs

DUAL DIMENSIONS: INCHES MILLIMETERS

*41753775001001*

| | | | |
|---|---|---|---|
| JOB NAME: | IQALUIT WASTE WATER TREATMENT UPGR | EQUIPMENT DESIGNATION: | MDP–1 |
| JOB LOCATION: | OTTAWA ON | EQUIPMENT TYPE: | QED–2 SWITCHBOARD |
| DRAWN BY: | RANJITHA B | DRAWING TYPE: | CENTER OF GRAVITY |
| ENGR: | JOSEPH HADCHITI ENG. | | |
| DATE: | MAY 03, 2019 | | |
| DRAWING STATUS: | APPROVAL | DWG# | F41753775–001–01 |

| REV | DESCRIPTION | BY | DATE | | | | | | | | |
|---|---|---|---|---|---|---|---|---|---|---|---|
| – | ---- | -- | --/--/-- | – | ---- | -- | --/--/-- | – | ---- | -- | --/--/-- |
| | | | | – | ---- | -- | --/--/-- | – | ---- | -- | --/--/-- |

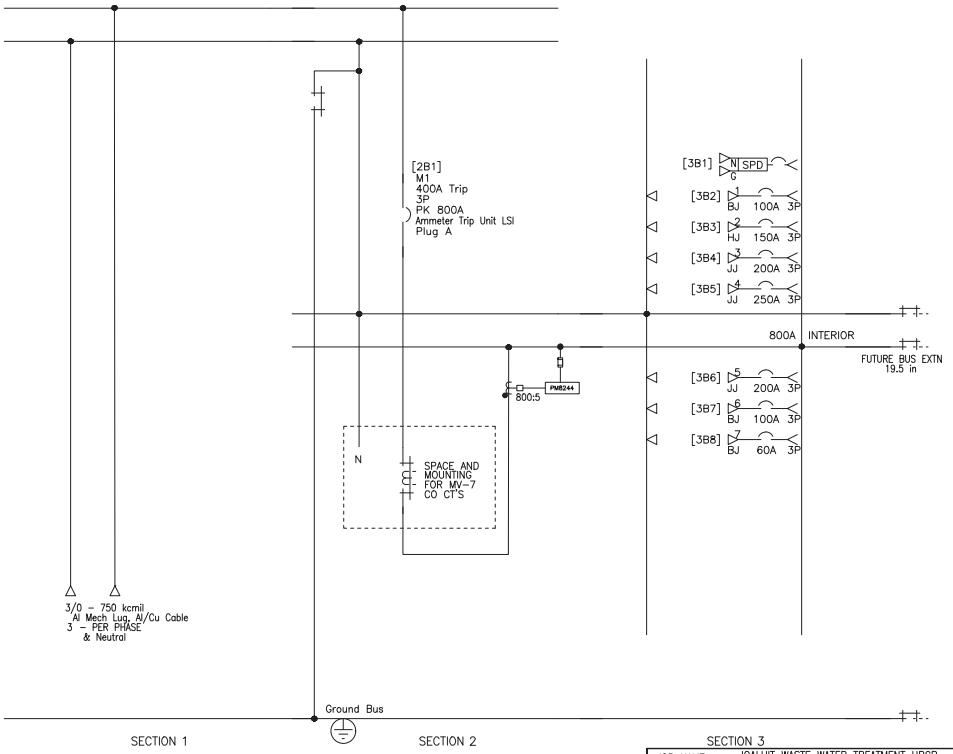


| | | | |
|---|---|---|---|
| JOB NAME: | IQALUIT WASTE WATER TREATMENT UPGR | EQUIPMENT DESIGNATION: | MDP-1 |
| JOB LOCATION: | OTTAWA ON | EQUIPMENT TYPE: | QED-2 SWITCHBOARD |
| DRAWN BY: | RANJITHA B | DRAWING TYPE: | ONE LINE |
| ENGR: | JOSEPH HADCHITI ENG. | | |
| DATE: | MAY 03, 2019 | | |
| DRAWING STATUS: | APPROVAL | DWG# | 041753775-001-01 |

PG 1 OF 2 | REV –

*41753775001001*

| REV | DESCRIPTION | BY | DATE | – | ---- | -- | --/--/-- | – | ---- | -- | --/--/-- |
|---|---|---|---|---|---|---|---|---|---|---|---|
| – | ---- | -- | --/--/-- | – | ---- | -- | --/--/-- | – | ---- | -- | --/--/-- |

# POWER STYLE QED–2 SWITCHBOARD

| SECT NO | CKT NO | GMD HEIGHT | DEVICE/FRAME RATING | TRIP AMP | FUSE/ TRIP | #P | DESIGNATION | N/P | LUG/WIRE INFORMATION | | | | ACCESSORIES / NOTES |
|---|---|---|---|---|---|---|---|---|---|---|---|---|---|
| | | | | | | | | | QTY | PHASE WIRE RANGE | QTY | NEUT WIRE RANGE | |
| 1 | – | – | Incoming Connection | – | – | – | – | – | 3 | 3/0 – 750 kcmil | 3 | 3/0 – 750 kcmil | |
| 2 | M1 | – | PK800A Plug A 100% | 400A | A–LSI | 3P | 400A MAIN | No | – | – | – | – | PM,PLA |
| 2 | UCT | – | 800A | – | – | – | IQALUIT | No | – | – | – | – | |
| 3 | – | 13.5 in | 240kA SPD | – | – | – | – | – | – | – | – | – | SPD |
| 3 | 1 | 4.5 in | BJ | 100A | – | 3P | 100A PNL 6B | No | 1 | #14 – 1/0 AWG | 1 | #14 – 1/0 AWG | PLA |
| 3 | 2 | 4.5 in | HJ | 150A | – | 3P | 150A TX–1 | No | 1 | #6 – 3/0 AWG | 1 | #6 – 3/0 AWG | PLA |
| 3 | 3 | 4.5 in | JJ | 200A | – | 3P | 200A SPARE | No | 1 | 3/0 – 350 kcmil | 1 | 3/0 – 350kcmil | PLA |
| 3 | 4 | 4.5 in | JJ | 250A | – | 3P | 250A MCC–1 | No | 1 | 3/0 – 350 kcmil | 1 | 3/0 – 350kcmil | PLA |
| 3 | 5 | 4.5 in | JJ | 200A | – | 3P | 200A TX–3 | No | 1 | 3/0 – 350 kcmil | 1 | 3/0 – 350kcmil | PLA |
| 3 | 6 | 4.5 in | BJ | 100A | – | 3P | 100A SPARE | No | 1 | #14 – 1/0 AWG | 1 | #14 – 1/0 AWG | PLA |
| 3 | 7 | 4.5 in | BJ | 60A | – | 3P | 60A MCC–2 | No | 1 | #14 – 1/0 AWG | 1 | #14 – 1/0 AWG | PLA |

| LEGEND | |
|---|---|
| PLA | Padlock Attachment–Fixed |
| PM | Power Meter PM8244 |
| SPD | Surge Protection Device |

*41753775001001*

| | | | |
|---|---|---|---|
| JOB NAME: | IQALUIT WASTE WATER TREATMENT UPGR | EQUIPMENT DESIGNATION: | MDP–1 |
| JOB LOCATION: | OTTAWA ON | EQUIPMENT TYPE: | QED–2 SWITCHBOARD |
| DRAWN BY: | RANJITHA B | DRAWING TYPE: | SCHEDULE |
| ENGR: | JOSEPH HADCHITI ENG. | | [redacted] |
| DATE: | MAY 03, 2019 | | |
| DRAWING STATUS: | APPROVAL | DWG# | 041753775–001–01 |

PG 2 OF 2 | REV –

| REV | DESCRIPTION | BY | DATE |
|---|---|---|---|
| – | ---- | -- | --/--/-- |

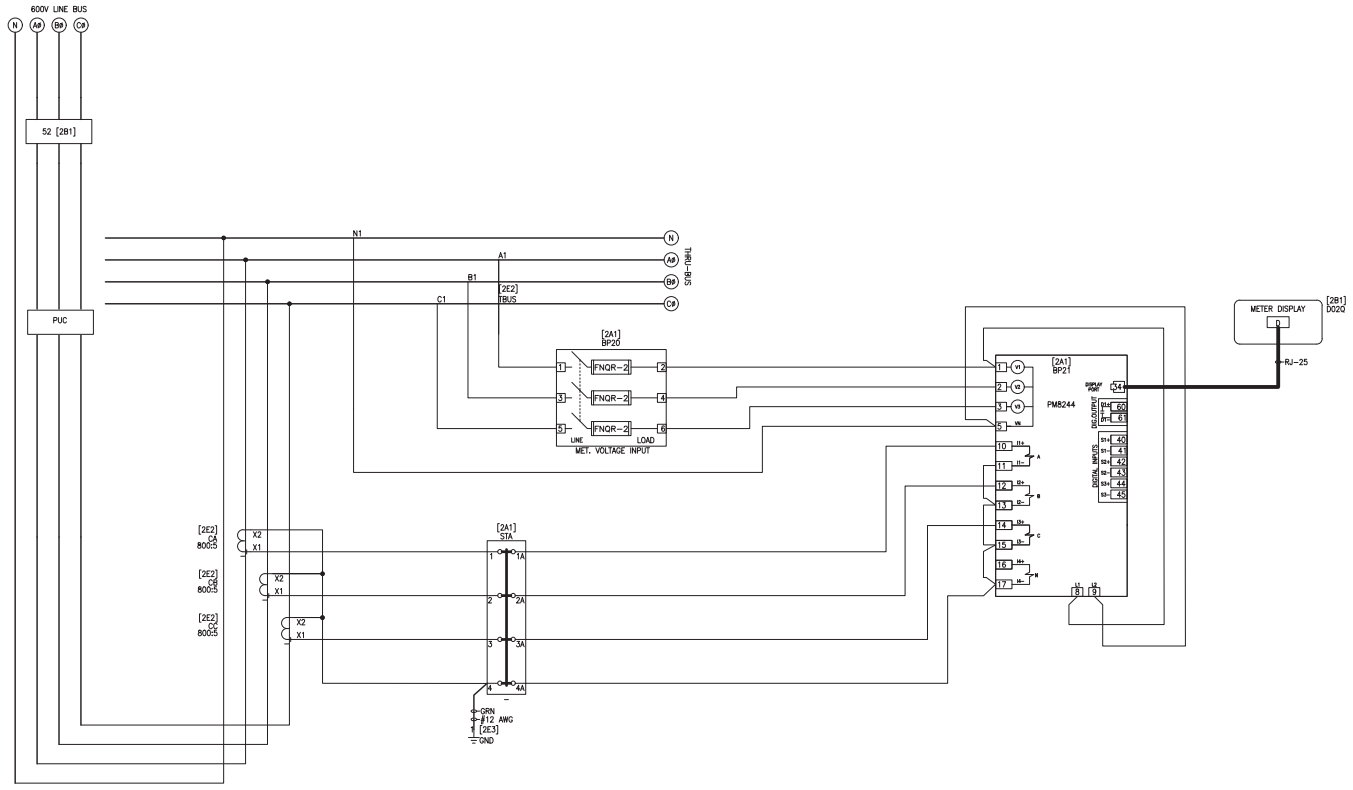


MAIN METERING

NOTES:
1. USE 14 GAUGE WIRE MINIMUM, UNLESS OTHERWISE NOTED. USE 12 GAUGE GROUND WIRE FOR CANADIAN ORDERS.
2. CONTROL POWER CAN BE DRAWN FROM FUSED VOLTAGE INPUTS ONLY WHEN LINE-TO-NEUTRAL VOLTAGE IS BELOW 415V AC, OR SEPARATELY DERIVED 120V CONTROL POWER ALSO ACCEPTABLE.
3. USE DISPLAY CABLE SUPPLIED WITH POWER METER.
4. FOR ADDITIONAL INFORMATION AND COMMUNICATION WIRING SEE POWERLOGIC POWER METER SERIES 8000 INSTRUCTION BULLETIN.
5. MULTIPLE METERS MAY BE FED BY SAME DISCONNECT. INDIVIDUAL FUSING IS REQUIRED.

| | | | |
|---|---|---|---|
| JOB NAME: | IQALUIT WASTE WATER TREATMENT UPGR | EQUIPMENT DESIGNATION: | MDP-1 |
| JOB LOCATION: | OTTAWA ON | EQUIPMENT TYPE: | QED-2 SWITCHBOARD |
| DRAWN BY: | RANJITHA B | DRAWING TYPE: | ELEMENTARY DIAGRAMS |
| ENGR: | JOSEPH HADCHITI ENG. | | [redacted] |
| DATE: | MAY 03, 2019 | | |
| DRAWING STATUS: | APPROVAL | DWG# E41753775-001-03 | PG 1 OF 1 REV – |

*41753775001000 1*

| REV | DESCRIPTION | BY | DATE | – | ---- | -- | --/-- | – | ---- | -- | --/-- |
|---|---|---|---|---|---|---|---|---|---|---|---|
| – | ---- | -- | --/-- | – | ---- | -- | --/-- | – | ---- | -- | --/-- |

## I–LINE INTERIOR PANEL

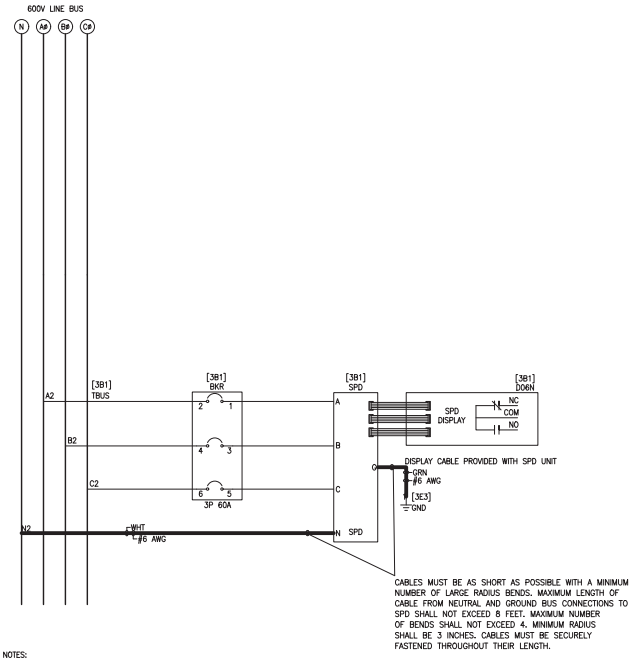


NOTES:

1. DRY CONTACTS FOR REMOTE MONITOR, ETC. LOCATED ON REAR OF DISPLAY.
2. PATCH CABLES MUST BE PROTECTED WHERE THEY CROSS THE HINGE SIDE DOOR FLANGE FROM THE DISPLAY DOOR TO INSTRUMENT COMPARTMENT. PATCH CABLES MUST BE KEPT SEPARATED FROM POWER WIRING.
3. CABLES MUST BE AS SHORT AS POSSIBLE WITH A MINIMUM NUMBER OF LARGE RADIUS BENDS. MAXIMUM LENGTH OF CABLE FROM THE BUS TAPS TO THE DISCONNECT SHALL NOT EXCEED 8 FEET. ALL CONDUCTORS INCLUDING PHASES, NEUTRAL, & GROUND MUST BE TWISTED TOGETHER 1 TIME EVERY 2 FEET FOR AS LONG AS POSSIBLE ALONG THEIR ROUTING WITHIN THE SWITCHBOARD. MAXIMUM NUMBER OF BENDS SHALL NOT EXCEED 4 AND MINIMUM BEND RADIUS SHALL BE 3 INCHES. CABLES MUST BE SECURELY FASTENED THROUGHOUT THEIR LENGTH. ROUTE CABLES OUT HOLE IN INSTRUMENT COMPARTMENT IF BUS TAPS ARE AT BOTTOM.
4. FOR EQUIPMENT BUILT TO ANSI C37.20.1 OR CSA C22.2 No. 31–M89, SINGLE CONDUCTOR CABLE MAY BE TYPE SIS AND COLOR CODES MAY BE DISREGARDED FOR SINGLE CONDUCTORS.
5. CONNECT THE SPD NEUTRAL LUG TO THE GROUND BUS WHEN THE SYSTEM IS 3 PHASE, 4 WIRE AND THE NEUTRAL BUS IS NOT PRESENT WITHIN THE EQUIPMENT.
6. LEGACY–WHEN THE SPD IS MOUNTED IN A 19.5" METERING COMPARTMENT, CONNECT THE GROUND WIRE TO THE GROUND BUS EXTENSION ASSEMBLY THAT IS MOUNTED ON THE RIGHT SIDE OF THE SECTION.
7. SERIES 2–ROUTE NEUTRAL AND GROUND CABLE OUT THE CLOSEST GROMMET. LEAVE ADEQUATE SLACK IN THE WIRING TO ALLOW THE TVSS UNIT TO PULL FORWARD.

## SURGE PROTECTIVE DEVICE (SPD)

| | | | |
|---|---|---|---|
| JOB NAME: | IQALUIT WASTE WATER TREATMENT UPGR | EQUIPMENT DESIGNATION: | MDP–1 |
| JOB LOCATION: | OTTAWA ON | EQUIPMENT TYPE: | QED–2 SWITCHBOARD |
| DRAWN BY: | RANJITHA B | DRAWING TYPE: | ELEMENTARY DIAGRAMS |
| ENGR: | JOSEPH HADCHITI ENG. | | [redacted] |
| DATE: | MAY 03, 2019 | | |
| DRAWING STATUS: | APPROVAL | DWG# E41753775–001–09 | PG 1 OF 1 REV – |

*41753775001001*

| REV | DESCRIPTION | BY | DATE |
|---|---|---|---|
| – | ---- | -- | --/--/-- |

## STANDARD LAYOUT FOR TYPICAL FOUR HIGH STACK SWITCHBOARD

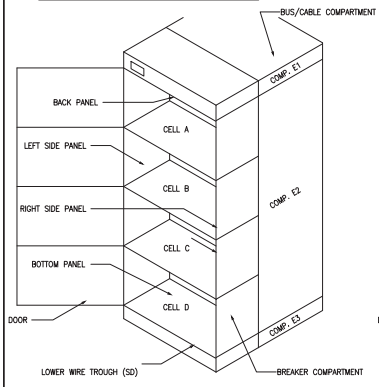


## STANDARD LAYOUT FOR TYPICAL MAIN/ SUBMAIN SECTION

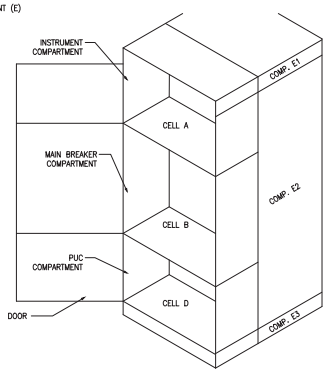


## TYPICAL I-LINE PANEL

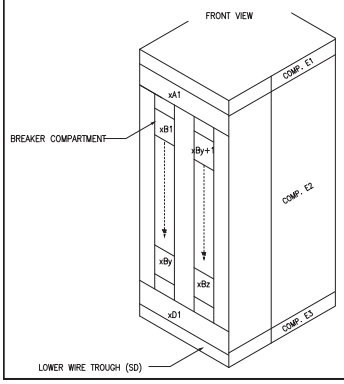


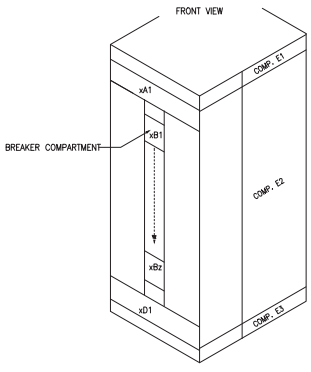


**DEVICE LOCATOR DESIGNATIONS**

BPz = ANY DEVICE LOCATED ON COMPARTMENT BACK MOUNTING PANEL.
BPTz = TERMINAL BLOCK LOCATED ON COMPARTMENT BACK MOUNTING PANEL.
BKRz = CIRCUIT BREAKER.
Dz = DEVICES LOCATED ON DOOR.
Lz = ANY DEVICE LOCATED ON LEFT SIDE PANEL OF A COMPARTMENT.
LTz = TERMINAL BLOCK LOCATED ON LEFT SIDE PANEL OF A COMPARTMENT.
Rz = ANY DEVICE LOCATED ON RIGHT SIDE PANEL OF A COMPARTMENT.
RTz = TERMINAL BLOCK LOCATED ON RIGHT SIDE PANEL OF A COMPARTMENT.
XTz = TERMINAL BLOCK LOCATED ON BOTTOM PANEL OF A COMPARTMENT.
Xz = ANY DEVICE LOCATED ON BOTTOM PANEL OF A COMPARTMENT.

**[XY2] SECTION/CELL LOCATION**

COMPARTMENT OR CELL SUBDIVISION
1-4 = EACH COMPARTMENT OR CELL MAY BE SUBDIVIDED.

SECTION LOCATION = A,B,C,D,E.
A = TOP CELL
B = SECOND TO TOP CELL
C = SECOND TO BOTTOM CELL
D = BOTTOM CELL
E = BUS / CABLE COMPARTMENT

SECTION NUMBER
WHEN VIEWING LINE UP FROM THE FRONT, THE LEFT MOST VERTICAL SECTION IS SECTION 1.

**[XY2] SECTION/CELL LOCATION BACK TO BACK**

SECTION NUMBER
WHEN VIEWING LINE UP FROM THE FRONT, THE LEFT MOST VERTICAL SECTION IS SECTION 1.
F = FRONT
R = REAR

**SPECIAL SPECIFIC DEVICE DESIGNATIONS**

SSTz SHIPPING SPLIT TERMINAL BLOCK. — SST1 : 120Vac/Vdc, SST2 : 24Vdc, SST6 : MDGF Wiring
STz CURRENT TRANSFOMER SHORTING TERMINAL BLOCK.
xHz HEATER ELEMENTS
TCHz THERMOSTATS
GNDz SECTION GROUND BUS CONNECTION
PHTT = PHASE TAP TOP
PHTB = PHASE TAP BOTTOM
TBUS = THRU-BUS TAP

**FROM/TO WIRING INFORMATION**

1=BKR1-914#16,BRK1-913
- CONNECTION ON DEVICE AT OTHER END OF WIRE.
- DEVICE AT OTHER END OF WIRE
- TERMINAL NUMBER

EXPLANATION
WIRE CONNECTS TO THIS DEVICE, TERMINAL 1. THE OTHER END OF THE WIRE CONNECTS TO DEVICE "BKR1", TERMINAL "914". THE WIRE TYPE IS 16 AWG, SIS. THE WIRE ALSO CONNECTS TO DEVICE "BKR1", TERMINAL 913. WIRE TYPE OF THE SECOND CONNECTION IS TYPE IS 14 AWG, SIS.

10=[1D1]BKR2-Z1#18

EXPLANATION
WIRE CONNECTS TO THIS DEVICE, TERMINAL 10. THE OTHER END OF THE WIRE CONNECTS TO DEVICE "BKR2", IN COMPARTMENT "1D1", TERMINAL "Z1". TYPE IS 18 AWG, SIS.

WIRE AWG
IF NO WIRE SIZE IS GIVEN, WIRE IS 14 AWG, TYPE SIS.

SECTION/CELL LOCATION
IF NO SECTION/CELL LOCATION IS GIVEN, WIRE WILL STAY WITHIN THE CURRENT CELL.

TYPICAL WIRE SLEEVE MARKER
FROM [1B1]BKRA-F2+
TO [2D1]BKRD-F2+

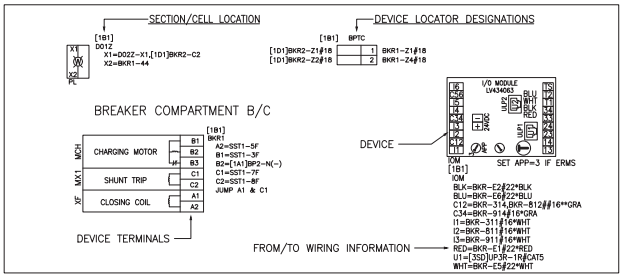


## ELEMENTARY & WIRING DIAGRAM LAYOUT INFORMATION (NOT TO SCALE)

| | | | |
|---|---|---|---|
| JOB NAME: | IQALUIT WASTE WATER TREATMENT UPGR | EQUIPMENT DESIGNATION: | MDP-1 |
| JOB LOCATION: | OTTAWA ON | EQUIPMENT TYPE: | QED-2 SWITCHBOARD |
| DRAWN BY: | RANJITHA B | DRAWING TYPE: | ISOMETRIC VIEW/COMPARTMENT DESIGNATION |
| ENGR: | JOSEPH HADCHITI ENG. | | |
| DATE: | MAY 03, 2019 | | |
| DRAWING STATUS: | APPROVAL | DWG# I41753775-001-01 | PG 1 OF 1 REV – |

41753775001000101

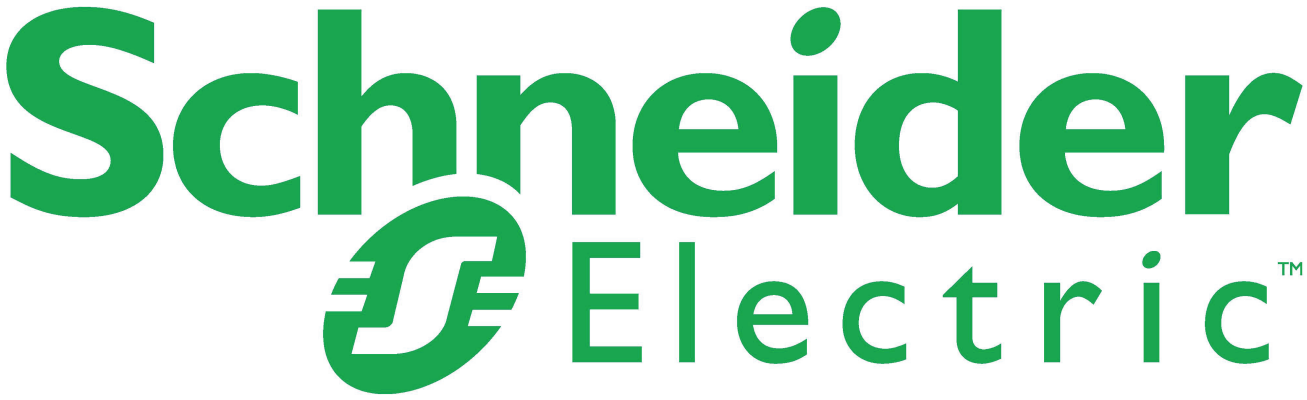


# LITERATURE

# *POWER-STYLE® QED Switchboards*

Setting standards for today,
building foundations for tomorrow

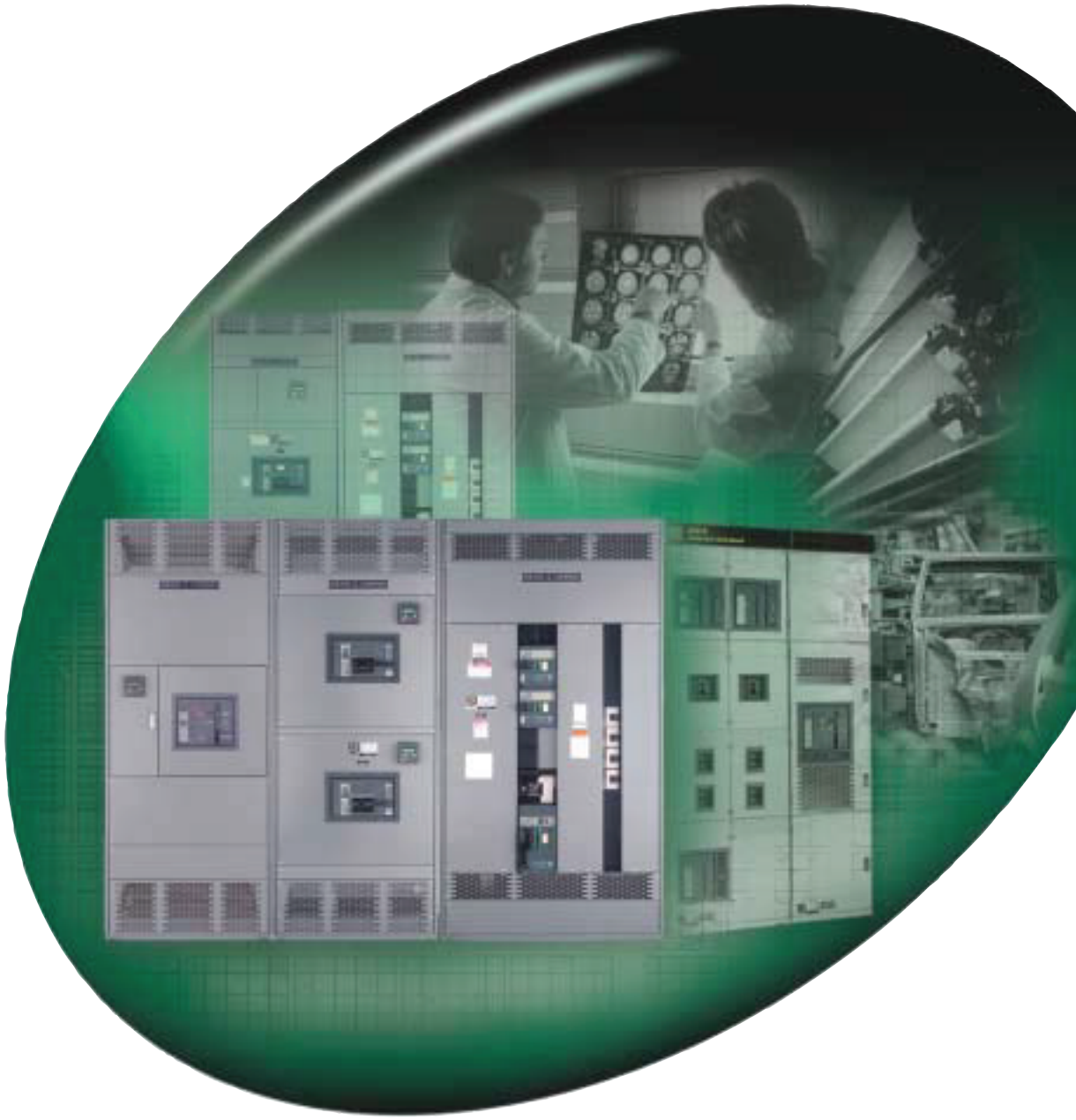

SQUARE D
Schneider Electric







# *With a tradition of distinction*

## SQUARE D® POWER-STYLE® Switchboards set the standard for the system solutions of today and those of tomorrow

These **quality** products are built according to your specifications in strict adherence to NEC, NEMA and UL standards at factories certified to ISO 9002 quality standards. The **versatility** in our switchboard design helps you meet and exceed today's complex electrical distribution requirements. Features include front or rear accessibility, fixed or drawout construction, and individually or group-mounted circuit breakers or fusible switches. POWER-STYLE switchboards are also designed with **durability** in mind. Sturdy frames and standard bolted base channels all contribute to durability.

Quality, versatility and durability also define our SPEED-D® ready-to-assemble switchboards. Living up to its name, the SPEED-D line offers shipment of service section switchboards that's measured in days, not weeks.

One of the most important advantages you'll see in SQUARE D switchboards is our focus on system solutions. Our switchboards are designed to maximize the capabilities of our overcurrent protection devices, metering options and other switchboard accessories.

We also offer power monitoring and communications systems as simple or complex as your application requires. You can choose to communicate with a single PC, multiple PCs or over the Internet, using our Transparent Ready™ Internet communications system. Start with a simple monitoring and communications system and expand as your power system grows.

Our focus on customer needs does not stop here. SQUARE D Services offers a complete line of solutions through our national network of service locations. We can offer comprehensive solutions related to new installation, maintenance and testing services.

With Square D/Schneider Electric you can create an efficient electrical distribution system that meets your needs today, while building a foundation for the future. This is the SQUARE D difference.

## We have an efficient solution designed to meet your needs

| | Commercial | Industrial |
|---|---|---|
| QED-S | Office buildings<br>Strip malls<br>Retail stores<br>Grocery stores<br>Nursing homes<br>Hospitals | Automotive plants<br>Paper mills<br>Manufacturing facilities<br>Refineries<br>Textile plants<br>Pharmaceuticals |
| QED-2 | Office buildings<br>Strip malls<br>Retail stores<br>Grocery stores<br>Nursing homes<br>Hospitals | Automotive plants<br>Paper mills<br>Manufacturing facilities<br>Refineries<br>Textile plants<br>Pharmaceuticals |
| QED-6 | Universities<br>Public buildings<br>Communication Centers<br>High-rise offices<br>Hospitals | Automotive plants<br>Manufacturing facilities<br>Refineries<br>Textile plants<br>Chemical plants<br>Pharmaceuticals<br>Semiconductor manufacturing |

### Standards

The POWER-STYLE QED switchboards in this brochure are designed, manufactured and tested to meet the latest revisions of the following appropriate standards.

| | |
|---|---|
| UL 50 | Enclosures for Electrical Equipment |
| UL 98 | Enclosed and Deadfront Switches |
| UL 489 | Molded Case Circuit Breakers |
| UL 891 | Deadfront Switchboards |
| UL 943 | Ground Fault Circuit Interrupters |
| UL 977 | Fused Power Circuit Devices |
| UL 1053 | Ground Fault Sensing and Relaying Equipment |
| NEC Article 834 | Switchboards |
| NFPA 70 | National Electrical Code® (NEC®) |
| ANSI/IEEE C12.1 | Code for Electricity Metering |
| ANSI C39.1 | Electrical Analog Indicating Instruments |
| ANSI C57.13 | Instrument Transformers |
| NEMA AB 1 | Molded Case Circuit Breakers and Molded Case Switches |
| NEMA PB 2 | Switchboards |

### Federal Specifications

| | |
|---|---|
| W-C-375B/GEN | Molded Case Circuit Breakers |
| W-C-870 | Fuseholders |
| W-S-865 | Enclosed Knife Switch |

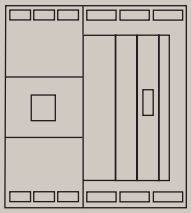

*QED-S switchboard*

Front accessible, group-mounted panels to 2,500 A

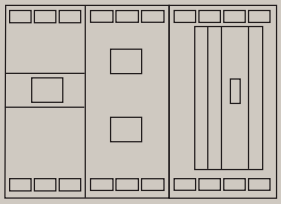

*QED-2 switchboard*

Individually mounted mains to 5,000 A, distribution sections to 4,000 A, group-mounted to 1,200 A

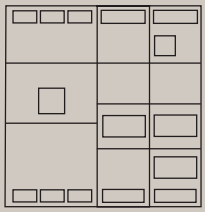

*QED-6 switchboard*

Individually mounted mains to 5,000 A, front and rear access with dedicated loadside cable entry

# POWER-STYLE® QED-2





QED-2 combination section

POWER-STYLE QED-2 switchboards are designed to distribute electrical power and give you economies of floor space without compromising performance or versatility. They provide circuit breaker or fusible overcurrent protection for services rated to 5,000 A with a maximum voltage of 600 VAC or 250 VDC. QED-2 switchboards can be used as service entrance equipment or as distribution centers in commercial, industrial or institutional applications. For additional flexibility, they can be customized to meet your specific application requirements.

**A Solid Foundation**

QED-2 switchboards are available as single or multiple mains or as distribution sections. Individually mounted mains use SQUARE D P- and R-frame electronic or MICROLOGIC® molded case circuit breakers through 2,500 A, MASTERPACT® NW two-step stored energy electronic trip circuit breakers, circuit breakers for fixed or drawout applications through 5,000 A and fusible switches through 5,000 A.

**Efficient Distribution Options**

QED-2 distribution sections include both I-LINE circuit breaker and QMB fusible switch group-mounted panels. With I-LINE plug-on circuit breaker construction, the line end of the circuit breaker plugs directly onto the I-LINE panel bus assembly. This design allows you to quickly install and wire circuit breakers from the fronts of the switchboard. In addition, I-LINE circuit breakers are keyed to mounting slots in the support pan for automatic alignment and faster installation. I-LINE switchboard sections are available in single- or double-row construction.

**High Ampacities**

If you require higher feeder ampacities, QED-2 switchboards are available with individually mounted branch devices up to 4,000 A. They include both thermal-magnetic and electronic trip molded case circuit breakers or BOLT-LOC Type BP fusible switches. For equipment ground fault protection, you can use electronic trip circuit breakers or fusible switches with the Type GC equipment ground fault system. With QED-2 switchboards, you can also specify options such as automatic throw-over systems.

## Features

- Front accessible load connections
- Front and rear alignment standard
- Switchboard fed by cable, busway, transformer, QED switchboard or other
- Switchboard ratings through 5000 A, 200kA; higher amperages available
- Thermal-magnetic, electronic, MICROLOGIC® or stored energy fix- and drawout-mounted circuit breaker mains and feeders
- Fix-mounted fusible switch mains and feeders
- Group-mounted circuit breaker and fusible switch mains and feeders
- Main devices in six sub-division or single main configurations
- Main and branch devices in single section configuration
- Main lugs in separate section in line-up or behind devices
- Group-mounted mains and branches
- Thermal-magnetic and electronic circuit breakers with standard, high, extra-high or current limiting capability
- Exclusive MICROLOGIC trip circuit breakers, 80% or 100% rated
- Zone selective interlocking on MICROLOGIC® circuit breakers, group-mounted 100 A/250 A thermal-magnetic circuit breakers with add-on ground fault and bolted pressure fusible switches
- POWERLOGIC® system customer metering including custom communications capability and interwiring
- All options available on circuit breakers and fusible switches
- Custom engineering including main-tie-mains, multiple sets of through bus, reduced heights and engineered houses
- Optional start-up service and training

## Options

Hot and cold sequence utility metering, customer metering and the POWERLOGIC monitoring and control system, equipment ground fault protection, automatic throw-over systems, transfer switches and zone selective interlocking.



QED-2 switchboards provide versatility and performance for today's complex commercial, industrial and utility applications.

# Solutions for Maximum Flexibility...

**If you're looking for an overcurrent device to meet your specific application, no one matches the selection found in the POWER-STYLE® QED switchboard family. All QED switchboards feature a choice of molded case circuit breakers or fusible switches.**

**You can select thermal-magnetic, current limiting, electronic or MICROLOGIC® circuit breakers in a configuration designed to meet your specific needs. The unique I-LINE construction from Square D/ Schneider Electric, for example, gives you the capacity of group mounting circuit breakers (up to 1,200 A) for faster installation, mounting flexibility and efficient use of space. You can also select individually mounted circuit breakers rated up to 5,000 A in fixed or drawout construction.**

**You can further enhance the flexibility of POWER-STYLE QED switchboards with other options, such as equipment ground fault protection with MICROLOGIC® electronic trip circuit breakers or BOLT-LOC Type BP switches with the TYPE GC equipment ground fault system. On 100 A and 250 A circuit breakers, an equipment ground fault module is available with two levels of protection to give you the backup protection you need for power-critical operations.**

# *POWER-STYLE® QED Metering Options*



MICROLOGIC Trip Units



POWERLOGIC Circuit Monitor



Utility metering

You can see versatility in the number and types of metering options available for the POWER-STYLE® QED switchboard family. They include customer metering featuring the advanced capabilities of the POWERLOGIC® monitoring and control system and MICROLOGIC® trip units. Utility metering options are also available to meet local utility requirements.

**Customer Metering from A to Z.**

The POWERLOGIC system provides over 50 meter values, which can be displayed locally on multiple POWERLOGIC circuit monitors or remotely on personal computers. On-board event and data logging, waveform capture and automated controls are also provided by the POWERLOGIC system. Now Square D/Schneider Electric not only offers the toughest switchboard in the industry, but the smartest one as well!

Effective electrical distribution is more than just the transmission of power. Capturing, understanding and managing power information can substantially increase your system efficiency and lower life cycle costs.

These trip units provide advanced functionality such as communications interfaces, POWERLOGIC power metering, and local/remote monitoring capability, which allows for integration and coordination of your electrical system. With the appropriate MICROLOGIC trip unit, you can:

- Communicate with breakers
- Gather power information and energy usage patterns
- Monitor events and deviations from the norm
- Remotely control breakers for better process loading
- Perform predictive maintenance

Because the trip units, which offer increasing levels of functionality, are interchangeable, you can upgrade equipment easily as your needs expand.

**Utility Metering.**

Square D/Schneider Electric provides utility current transformer (UCT) metering compartments to meet your local utility specifications. The UCT compartment has either single- or double-hinged doors with sealable hasps and screws. UCTs are available in full-height (90") or half-height (45") compartments. Depending upon your utility's requirements, we will provide either hot sequence CT compartments (metering ahead of the main disconnect) or cold sequence CT compartments (metering on the load side of the main disconnect).

## POWER-STYLE® QED Selection Information

| | QED-S | | QED-2 | | QED-6 | |
|---|---|---|---|---|---|---|
| **RATING** | **RATING** | | **RATING** | | **RATING** | |
| 400-4000 A | | ✓ | | ✓ | | ✓ |
| 400-5000 A | | | | ✓ | | ✓ |
| 6000 A | | | | ✓ | | |
| **INCOMING** | | | | | | |
| CABLE | | ✓ | | ✓ | | ✓ |
| BUSWAY | | | | ✓ | | ✓ |
| TRANSFORMER | | | | ✓ | | ✓ |
| THROUGH BUS TO QED | | | | ✓ | | |
| **MAIN DEVICE** | | | | | | |
| **Individual Fixed** | | | | | | |
| BOLTED PRESSURE SWITCH | 4000 A | ✓ | 5000 A | ✓ | | |
| THERMAL-MAGNETIC CIRCUIT BREAKER | 2500 A | ✓ | 2500 A | ✓ | 2500 A | ✓ |
| ELECTRONIC CIRCUIT BREAKER | 2500 A | ✓ | 2500 A | ✓ | 2500 A | ✓ |
| MICROLOGIC® CIRCUIT BREAKER | 2500 A | ✓ | 2500 A | ✓ | | |
| STORED ENERGY | 4000 A | ✓ | 5000 A | ✓ | 5000 A | ✓ |
| **Individual Drawout** | | | | | | |
| MASTERPACT NW CIRCUIT BREAKER | | | 5000 A | ✓ | 5000 A | ✓ |
| **Group** | | | | | | |
| THERMAL-MAGNETIC CIRCUIT BREAKER (I-LINE) | 1200 A | ✓ | 1200 A | ✓ | | |
| ELECTRONIC CIRCUIT BREAKER (I-LINE) | 1200 A | ✓ | 1200 A | ✓ | | |
| MICROLOGIC CIRCUIT BREAKER (I-LINE) | 1200 A | ✓ | 1200 A | ✓ | | |
| FUSIBLE SWITCH (QMB) | 1200 A | ✓ | 1200 A | ✓ | | |
| **FEEDER** | | | | | | |
| **Individual Fixed** | | | | | | |
| BOLTED PRESSURE SWITCH | 4000 A | ✓ | 4000 A | ✓ | | |
| THERMAL-MAGNETIC CIRCUIT BREAKER | 2500 A | ✓ | 2500 A | ✓ | 1200 A | ✓ |
| ELECTRONIC CIRCUIT BREAKER | 2500 A | ✓ | 2500 A | ✓ | | |
| MICROLOGIC CIRCUIT BREAKER | 2500 A | ✓ | 2500 A | ✓ | 1200 A | ✓ |
| STORED ENERGY CIRCUIT BREAKER | 4000 A | ✓ | 4000 A | ✓ | | |
| **Individual Drawout** | | | | | | |
| MASTERPACT® NT CIRCUIT BREAKER | | | | | 1200 A | ✓ |
| MASTERPACT NW CIRCUIT BREAKER | | | 4000 A | ✓ | | |
| **Group** | | | | | | |
| THERMAL-MAGNETIC CIRCUIT BREAKER (I-LINE) | 1200 A | ✓ | 1200 A | ✓ | | |
| ELECTRONIC CIRCUIT BREAKER (I-LINE) | 1200 A | ✓ | 1200 A | ✓ | | |
| MICROLOGIC CIRCUIT BREAKER (I-LINE) | 1200 A | ✓ | 1200 A | ✓ | | |
| FUSIBLE SWITCH (QMB) | 1200 A | ✓ | 1200 A | ✓ | | |
| **UTILITIES** | | | | | | |
| SELECTED | | ✓ | | | | |
| ALL | | | | ✓ | | |
| **CUSTOMER METERING** | | | | | | |
| POWER METER (A, V, W, COMM.) | | ✓ | | ✓ | | ✓ |
| CIRCUIT MONITOR (A, V, W, WAVEFORM, COMM.) | | ✓ | | ✓ | | ✓ |
| **ACCESS** | | | | | | |
| FRONT | | ✓ | | ✓ | | |
| FRONT & REAR | | ✓ | | ✓ | | |
| **COMPARTMENTALIZATION** | | | | | | |
| CIRCUIT BREAKER | | | | | | ✓ |
| BUSSING | | | | | | ✓ |
| LOAD LUGS | | | | | | ✓ |
| **OPTIONS** | | | | | | |
| SELECTED | | ✓ | | | | |
| ALL | | | | ✓ | | |
| **ENGINEERING** | | | | | | |
| STANDARD | | ✓ | | | | |
| CUSTOM | | | | ✓ | | |

*You can create an efficient electrical distribution system that meets your needs today, while building a foundation for the future. This is the SQUARE D difference.*

# *POWER-STYLE®*
# *Switchboards*

## The Difference is in the Details

- 100% rated phase and neutral through bus
- No deration of through bus
- Through bus extends the entire section (no through bus extensions required for additional sections)
- Captive splice bars
- Continuously plated bussing
- Front and rear alignment
- I-LINE® group-mounted distribution requires no additional hardware kit to add future circuit breakers
- Sectionalized shipment available for easier handling
- Removable lifting bars on NEMA Type 1 Enclosures
- NEMA Type 1 or 3R Non-Walk-In Enclosures
- ANSI 49 corrosion-resistant paint finish
- Removable top plate
- UL891 Labeled
- Switchboard frame suitable for use as floor sills
- 80% and 100% rated MICROLOGIC® electronic trip circuit breakers through 1200 A for group-mounted distribution
- POWERLOGIC® system customer metering from ammeter, voltmeter, wattmeter to waveform capture, data logging, alarm/relay functions, disturbance monitoring and programmable logic



### SPEED-D® Service Section Switchboards

UL listed and available from distributor or warehouse stock, these switchboards contain a EUSERC utility metering compartment and a main circuit breaker with either a 42-circuit NQOD interior or a 27" I-LINE interior. It is also available with a QMB interior for six circuit main applications. Each section is suitable for use as service entrance equipment and is available in either Type 1 or Type 3R construction. Accessories include an indoor underground pull section, outdoor (3R) underground pull section, lug landing kit and loadside wireway.

- Mains rating: 400, 600, or 800 A
- Voltage: 120/240, 208Y/120, 240/120, or 480Y/277 VAC
- Systems: 1Ø3W or 3Ø4W
- Dimensions: Type 1 enclosure – 90" high, 14" deep, 36" wide
- Type 3R enclosure – 90" high, 24.5" deep, 36" wide



© 2002 Schneider Electric
All rights reserved
Document Number 2700BR0202

SQUARE D
Schneider Electric

*Visit www.SquareD.com for more information.*

# Internal Modular SPDs

## Square D Internally Mounted Surge Protective Devices

Square D™ brand Surgelogic™ internal modular Surge Protective Devices (SPDs) deliver specification grade performance for service entrance or critical branch panel applications. This multi-phase system provides suppression for all critical modes inside electrical equipment and shorter lead lengths with superior SPD performance.



SQUARE D™

by Schneider Electric

# Internal Modular SPDs Features



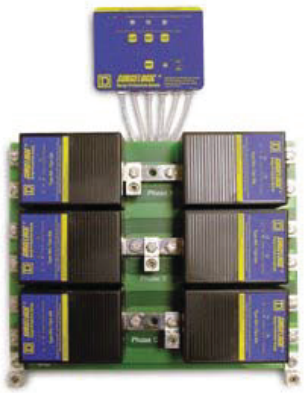

Internal panel modular Surge Protective Devices (SPDs) provide superior design and service life for a wide variety of commercial, industrial, or institutional applications. Square D brand Surgelogic SPDs offer first-rate performance and surge suppression for demanding service entrance applications or as part of a suppression network. The robust modular construction reduces possible down time and maintenance costs.

## Superior Performance

Surgelogic SPDs utilize a high-energy suppression circuit that provides 10 modes of suppression from 100,000 to 480,000 peak Amps of surge current rating per phase. Modular SPDs feature circuity that provides not only transient surge suppression, but also noise filtration.

## Installation

Integral solutions come professionally pre-wired into electrical gear and panels from the factory insuring short lead lengths and high performance. All units are tested at the factory before delivery to their final destination, maintaining Square D brand's high standard of quality. There is also no need for additional enclosures or installation labor costs.

## Warranty

Surgelogic internal modular SPDs have a 10-year warranty.

| FEATURES | ADVANTAGES | BENEFITS |
|---|---|---|
| Integral to electrical gear and panels | SPDs are professionally installed inside electrical gear and panels | Delivers high levels of SPD performance and saves on enclosure and installation expenses |
| 100,000 to 480,000 Amp Capacity (depending on model) | Longer service life and suppression against high-energy lightning strikes | High performance surge suppression even in severe electrical conditions |
| EMI/RFI Noise Rejection | Increased transient suppression | Improves surge suppression to the equipment |
| Advanced Diagnostics | Allows for visual indication/testing of the suppressor's functionality | Provides immediate response if suppressor is damaged |
| Suppression Status Alarms | Allows multiple methods of alarm notification | Provides immediate notification through audible, visual and remote signaling if reduced suppression occurs |
| Coordinated Fuse Technology | Coordinated fusing allows disconnection methods for thermal and high-current events | Provides premium surge suppression while managing both thermal and high-current end-of-life events |

**Schneider Electric USA, Inc.** 800 Federal Street Andover, MA 01810, USA Telephone: (978) 794-0800 TAG: (800) 577-7353 www.schneider-electric.com/us

Document Number 9990-0116Rev02 Nov 2017 bw

© 2011-2017 Schneider Electric. All rights reserved.

# Internal Modular SPDs
## Features (continued)

### NF Panelboard



NF panelboards are primarily used for lighting and power distribution up to 600 Amps. These panelboards follow current National Electric Code changes, provide electrical capacity up to 84 circuit breakers, and will allow up to 72 circuits with surge protection installed. NF panels are designed with 200% rated copper neutrals for non-linear loads. (NF max volts 600/347 Vac)

**SPD available surge current ratings:** 100, 120, 160, 200, 240 kA

### QED Switchboard



QED Switchboards are made for use as service entrance equipment or as distribution centers in commercial, institutional, and industrial applications. QEDs are extremely versatile providing front accessible load connections with multiple breaker and fusible switch options. QEDs enable easy access to power monitoring equipment such as products from our Square D brand PowerLogic™ brand. (Max volts 600 Vac, max current 4,000 Amps)

**SPD available surge current ratings:**
120, 160, 240, 320, 480 kA

## Internal SPDs




### Performance

| | |
|---|---|
| Surge Current Rating per Phase | Up to 480kA |
| Short Circuit Current Rating | 200kA |
| Modes of Protection | 6, 10 |
| Fusing | Individually fused MOVs |
| Thermal Fusing | Yes |
| Overcurrent Fusing | Yes |
| Sine Wave Tracking | Yes |
| EMI/RFI Filtering | Up to -42 dB |
| Operating Frequency | 50/60 Hz |

### Mechanical Description

| | |
|---|---|
| Connection Method | #10-#2 AWG Terminals |
| Mounting Method/Circuit Type | Parallel |
| Operating Altitude | Sea Level-12,000' (3,658 m) |
| Storage Temperature | -40˚ F (-40˚ C) to 149˚ F (65˚ C) |
| Operating Temp. | -4˚ F (-20˚ C) to 149˚ F (65˚ C) |
| LCD Operating Temp. | 32˚ F (0˚ C) to 149˚ F (65˚ C) |
| Operating Humidity | 0 to 95% non-condensing |

### Diagnostics

Push to test diagnostic switches, red and green status LEDs per phase (internal redundant status LEDs are green), module status LEDs per mode, dry contacts, audible alarm with disable switch, surge counter.

### Options

- Remote monitor

### Safety and Performance

Type 2 SPD: cURus per UL 1449 4th Edition and CAN/CSA C22.2 No. 8-M1986.
Complies with UL 96A 12th Edition Master Label requirements for Lightning Protection Systems.

Type 1 SPD: URus per UL 1449 4th Edition and CAN/CSA C22.2 No. 8-M1986.
Complies with UL 96A 12th Edition Master Label requirements for Lightning Protection Systems.

© 2011-2017 Schneider Electric. All rights reserved.

# Internal Modular SPDs
## Features (continued)

### Power-Zone Switchgear



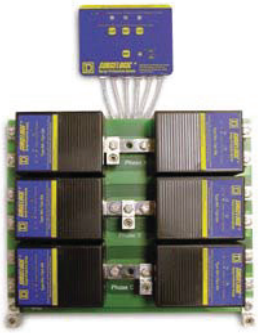

The Square D brand Power-Zone™ 4 low voltage metal-enclosed drawout switchgear is designed to provide superior electrical distribution and power quality management. Power-Zone 4 switchgear is designed to deliver maximum uptime, system selectivity, and ease of maintenance. All of these features are packed into one of the smallest footprints available for low voltage drawout switchgear. (Max volts 600 Vac, max current 5,000 Amps)

**SPD available surge current ratings:**
120, 160, 240, 320, and 480 kA

### QMB Panelboard





When specifications or electrical codes call for a fusible panelboard, the QMB family offers superior performance and time-saving installation features. The reliability of the QMB panelboard makes it the product of choice for large commercial and industrial applications. (Max volts 600 Vac, max current 400 Amps)

**SPD available surge current ratings:** 120, 160, 240 kA

### Motor Control Center





The feature-rich modular design minimizes space and maximizes ease-of-use and accessibility of motor control devices. The Model 6 MCC has integrated industry-leading components into the smallest and one of the most flexible footprints possible to meet industry's power, control, and automation needs. (Max volts 480 Vac, max current 2,500 Amps)

**SPD available surge current ratings:** 120, 160, 240 kA

### Busway



Square D brand I-Line™ Busway is engineered to replace old cable and conduit systems. This next-generation power distribution system is loaded with exceptional features, including a 200% neutral and a 100% isolated ground path. (Max volts 600 Vac, max current 5,000 Amps)

**SPD available surge current ratings:** 120, 160, 240 kA

© 2011-2017 Schneider Electric. All rights reserved.

# Internal Modular SPDs Specifications

## WYE Configured SPD Specifications

| Voltage | Surge Current per Phase | Modes of Protection | Configuration | Model Number | MCOV | $I_n$ | VPR L-N | VPR L-G | VPR L-L | VPR N-G |
|---|---|---|---|---|---|---|---|---|---|---|
| 120/240V | 120kA | 6 | 1 Ø, 3-wire+G | TVS1IMA12_ | 150V | 20kA | 700V | 800V | 1200V | 700V |
| 208Y/120V ■ | 120kA | 10 | 3 Ø, Wye, 4-wire+G | TVS2IMA12_ | 150V | 20kA | 700V | 800V | 1200V | 700V |
| 480Y/277V ▲ | 120kA | 10 | 3 Ø, Wye, 4-wire+G | TVS4IMA12_ | 320V | 20kA | 1200V | 1200V | 2000V | 1200V |
| 600Y/347V | 120kA | 10 | 3 Ø, Wye, 4-wire+G | TVS8IMA12_ | 420V | 20kA | 1500V | 1500V | 2500V | 1500V |
| 120/240V | 160kA | 6 | 1 Ø, 3-wire+G | TVS1IMA16_ | 150V | 20kA | 700V | 800V | 1200V | 700V |
| 208Y/120V ■ | 160kA | 10 | 3 Ø, Wye, 4-wire+G | TVS2IMA16_ | 150V | 20kA | 700V | 800V | 1200V | 700V |
| 480Y/277V ▲ | 160kA | 10 | 3 Ø, Wye, 4-wire+G | TVS4IMA16_ | 320V | 20kA | 1200V | 1200V | 2000V | 1200V |
| 600Y/347V | 160kA | 10 | 3 Ø, Wye, 4-wire+G | TVS8IMA16_ | 420V | 20kA | 1500V | 1500V | 2500V | 1500V |
| 120/240V | 240kA | 6 | 1 Ø, 3-wire+G | TVS1IMA24_ | 150V | 20kA | 700V | 800V | 1200V | 700V |
| 208Y/120V ■ | 240kA | 10 | 3 Ø, Wye, 4-wire+G | TVS2IMA24_ | 150V | 20kA | 700V | 800V | 1200V | 700V |
| 480Y/277V ▲ | 240kA | 10 | 3 Ø, Wye, 4-wire+G | TVS4IMA24_ | 320V | 20kA | 1200V | 1200V | 2000V | 1200V |
| 600Y/347V | 240kA | 10 | 3 Ø, Wye, 4-wire+G | TVS8IMA24_ | 420V | 20kA | 1500V | 1500V | 2500V | 1500V |
| 120/240V | 320kA | 6 | 1 Ø, 3-wire+G | TVS1IMA32_ | 150V | 20kA | 700V | 800V | 1200V | 700V |
| 208Y/120V ■ | 320kA | 10 | 3 Ø, Wye, 4-wire+G | TVS2IMA32_ | 150V | 20kA | 700V | 800V | 1200V | 700V |
| 480Y/277V ▲ | 320kA | 10 | 3 Ø, Wye, 4-wire+G | TVS4IMA32_ | 320V | 20kA | 1200V | 1200V | 2000V | 1200V |
| 600Y/347V | 320kA | 10 | 3 Ø, Wye, 4-wire+G | TVS8IMA32_ | 420V | 20kA | 1500V | 1500V | 2500V | 1500V |
| 120/240V | 480kA | 6 | 1 Ø, 3-wire+G | TVS1IMA48_ | 150V | 20kA | 700V | 800V | 1200V | 700V |
| 208Y/120V ■ | 480kA | 10 | 3 Ø, Wye, 4-wire+G | TVS2IMA48_ | 150V | 20kA | 700V | 800V | 1200V | 700V |
| 480Y/277V ▲ | 480kA | 10 | 3 Ø, Wye, 4-wire+G | TVS4IMA48_ | 320V | 20kA | 1200V | 1200V | 2000V | 1200V |
| 600Y/347V | 480kA | 10 | 3 Ø, Wye, 4-wire+G | TVS8IMA48_ | 420V | 20kA | 1500V | 1500V | 2500V | 1500V |

■ 208Y/120 series also applies to the following voltage 220Y/127 ▲ 480Y/277 series also applies to the following voltages 380Y/220, 400Y/230, and 415Y/240

## High-Leg Delta (HLD) Configured SPD Specifications

| Voltage | Surge Current per Phase | Modes of Protection | Configuration | Model Number | MCOV | $I_n$ | VPR L-N | VPR H-N | VPR L-G | VPR H-G | VPR L-L | VPR H-L | VPR N-G |
|---|---|---|---|---|---|---|---|---|---|---|---|---|---|
| 240/120HLD | 120kA | 10 | 3 Ø, HLD*, 4-wire+G | TVS3IMA12_ | 150V | 20kA | 700V | 1200V | 800V | 1200V | 1200V | 1500V | 700V |
| 240/120HLD | 160kA | 10 | 3 Ø, HLD*, 4-wire+G | TVS3IMA16_ | 150V | 20kA | 700V | 1200V | 800V | 1200V | 1200V | 1500V | 700V |
| 240/120HLD | 240kA | 10 | 3 Ø, HLD*, 4-wire+G | TVS3IMA24_ | 150V | 20kA | 700V | 1200V | 800V | 1200V | 1200V | 1500V | 700V |
| 240/120HLD | 320kA | 10 | 3 Ø, HLD*, 4-wire+G | TVS3IMA32_ | 150V | 20kA | 700V | 1200V | 800V | 1200V | 1200V | 1500V | 700V |
| 240/120HLD | 480kA | 10 | 3 Ø, HLD*, 4-wire+G | TVS3IMA48_ | 150V | 20kA | 700V | 1200V | 800V | 1200V | 1200V | 1500V | 700V |

Model numbers not recognized as line items in Schneider Electric ordering system until a suffix code is applied

TYPE 2 WYE AND HLD MODEL NUMBER SUFFIX CODES

- P NQ/NF panelboard *(Not available in 320 and 480 kA)*
- B QED switchboard
- B2 QED series 2 switchboard
- Z PZ3/PZ4 switchgear *(Not available in TVS1 or TVS3)*
- Q QMB panelboard *(Not available in 320 and 480 kA)*
- M Motor Control Center *(Not available in 320 and 480 kA)*

TYPE 1 WYE AND HLD MODEL NUMBER SUFFIX CODES

- P1 NQ/NF panelboard *(Not available in 320 and 480 kA)*
- B1 QED switchboard
- B21 QED series 2 switchboard
- Z1 PZ3/PZ4 switchgear *(Not available in TVS1 or TVS3)*
- Q1 QMB panelboard *(Not available in 320 and 480 kA)*
- M1 Motor Control Center *(Not available in 320 and 480 kA)*

**Schneider Electric USA, Inc.** 800 Federal Street Andover, MA 01810, USA Telephone: (978) 794-0800 TAG: (800) 577-7353 www.schneider-electric.com/us

© 2011-2017 Schneider Electric. All rights reserved.

Document Number 9990-0116Rev02 Nov 2017 bw

# Internal Modular SPDs
# Specifications (continued)

## Delta/High-Resistance Ground (HRG) Configured SPD Specifications

| Voltage | Surge Current per Phase | Modes of Protection | Configuration | Model Number | MCOV | $I_n$ | VPR | | | |
|---|---|---|---|---|---|---|---|---|---|---|
| | | | | | | | L-N | L-G | L-L | N-G |
| 240V DELTA | 100kA | 6 | 3 Ø, Delta, 3-wire+G | TVS6IMA10_ | 300V | 20kA | N/A | 1200V | 1200V | N/A |
| 480V DELTA ■ | 100kA | 6 | 3 Ø, Delta, 3-wire+G | TVS5IMA10_ | 640V | 20kA | N/A | 1800V | 2000V | N/A |
| 600V DELTA ▲ | 100kA | 6 | 3 Ø, Delta, 3-wire+G | TVS9IMA10_ | 700V | 10kA | N/A | 2500V | 2500V | N/A |
| 240V DELTA | 120kA | 6 | 3 Ø, Delta, 3-wire+G | TVS6IMA12_ | 300V | 20kA | N/A | 1200V | 1200V | N/A |
| 480V DELTA ■ | 120kA | 6 | 3 Ø, Delta, 3-wire+G | TVS5IMA12_ | 640V | 20kA | N/A | 1800V | 2000V | N/A |
| 600V DELTA ▲ | 120kA | 6 | 3 Ø, Delta, 3-wire+G | TVS9IMA12_ | 700V | 10kA | N/A | 2500V | 2500V | N/A |
| 240V DELTA | 160kA | 6 | 3 Ø, Delta, 3-wire+G | TVS6IMA16_ | 300V | 20kA | N/A | 1200V | 1200V | N/A |
| 480V DELTA ■ | 160kA | 6 | 3 Ø, Delta, 3-wire+G | TVS5IMA16_ | 640V | 20kA | N/A | 1800V | 2000V | N/A |
| 600V DELTA ▲ | 160kA | 6 | 3 Ø, Delta, 3-wire+G | TVS9IMA16_ | 700V | 10kA | N/A | 2500V | 2500V | N/A |
| 600V DELTA ▲ | 180kA | 6 | 3 Ø, Delta, 3-wire+G | TVS9IMA18_ | 700V | 10kA | N/A | 2500V | 2500V | N/A |
| 240V DELTA | 200kA | 6 | 3 Ø, Delta, 3-wire+G | TVS6IMA20_ | 300V | 20kA | N/A | 1200V | 1200V | N/A |
| 480V DELTA ■ | 200kA | 6 | 3 Ø, Delta, 3-wire+G | TVS5IMA20_ | 640V | 20kA | N/A | 1800V | 2000V | N/A |
| 600V DELTA ▲ | 200kA | 6 | 3 Ø, Delta, 3-wire+G | TVS9IMA20_* | 700V | 10kA | N/A | 2500V | 2500V | N/A |
| 240V DELTA | 240kA | 6 | 3 Ø, Delta, 3-wire+G | TVS6IMA24_ | 300V | 20kA | N/A | 1200V | 1200V | N/A |
| 480V DELTA ■ | 240kA | 6 | 3 Ø, Delta, 3-wire+G | TVS5IMA24_ | 640V | 20kA | N/A | 1800V | 2000V | N/A |
| 600V DELTA ▲ | 240kA | 6 | 3 Ø, Delta, 3-wire+G | TVS9IMA24_* | 700V | 10kA | N/A | 2500V | 2500V | N/A |
| 240V DELTA | 320kA | 6 | 3 Ø, Delta, 3-wire+G | TVS6IMA32_ | 300V | 20kA | N/A | 1200V | 1200V | N/A |
| 480V DELTA ■ | 320kA | 6 | 3 Ø, Delta, 3-wire+G | TVS5IMA32_ | 640V | 20kA | N/A | 1800V | 2000V | N/A |
| 600V DELTA ▲ | 320kA | 6 | 3 Ø, Delta, 3-wire+G | TVS9IMA32_ | 700V | 10kA | N/A | 2500V | 2500V | N/A |
| 240V DELTA | 480kA | 6 | 3 Ø, Delta, 3-wire+G | TVS6IMA48_ | 300V | 20kA | N/A | 1200V | 1200V | N/A |
| 480V DELTA ■ | 480kA | 6 | 3 Ø, Delta, 3-wire+G | TVS5IMA48_ | 640V | 20kA | N/A | 1800V | 2000V | N/A |

■ 480V Delta series also applies to the following voltage 480Y/277V HRG
▲ 600V Delta series also applies to the following voltage 600Y/347V HRG
* *Note: 200kA and 240kA in 600V DELTA are 6 module systems and will require more installation room*

Model numbers not recognized as line items in Schneider Electric ordering system until a suffix code is applied

TYPE 2 DELTA MODEL NUMBER SUFFIX CODES

B QED switchboard
B2 QED series 2 switchboard
M Motor Control Center *(Not available in 320 and 480 kA for all voltages, 600V DELTA not available also in 200 and 240 kA)*
Z PZ3/PZ4 switchgear *(Not available in TVS1 or TVS3)*

TYPE 1 DELTA MODEL NUMBER SUFFIX CODES

B1 QED switchboard
B21 QED series 2 switchboard
M1 Motor Control Center *(Not available in 320 and 480 kA for all voltages, 600V DELTA not available also in 200 and 240 kA)*
Z1 PZ3/PZ4 switchgear *(Not available in TVS1 or TVS3)*




SPD OPTIONS

Remote Monitor - TVS12RMU
The remote monitor has a single red/green LED status indicator, audible alarm with enable/disable button, and can be wired up to 1,000' feet away. This device connects directly to the dry contact interface of the SPD and will alarm if the SPD enters a fault condition.

**Schneider Electric USA, Inc.**
800 Federal Street
Andover, MA 01810
Telephone: (978) 794-0800
www.schneider-electric.com/us

**Schneider Electric México, S.A. de C.V.**
Calz. J. Rojo Gómez 1121-A
Col. Gpe. del Moral 09300 México, D.F.
Tel. 55-5804-5000
www.schneider-electric.com.mx

**Schneider Electric Canada, Inc.**
5985 McLaughlin Road
Mississauga, ON L5R 1B8 Canada
Tel:1-800-565-6699
www.schneider-electric.ca

© 2011-2017 Schneider Electric. All rights reserved. Schneider Electric, Square D, Surgelogic, PowerLogic, and Power-Zone are trademarks owned by Schneider Electric Industries SAS or its affiliated companies. All other trademarks are the property of their respective owners.

# PowerLogic PM8000 series

## Intermediate metering

## Technical data sheet




Schneider Electric

# PM8000 series
## Functions and characteristics

PB113688




**PowerLogic PM8000 series meter.**

PB113691




**PowerLogic PM8000 series meter - rear view.**

PB113692




**PowerLogic PM8000 DIN rail mounted meter.**

The PowerLogic PM8000 series meter is a highly accurate, extremely reliable power and energy meter with unmatched flexibility and usability. The meter combines accurate 3-phase energy and power measurements with data logging, power quality analysis, alarming and I/O capabilities not typically available in such a compact meter.

The PM8000 series meters are compliant with stringent international standards that guarantee their metering accuracy and power quality measurements. Ideal for industrial and critical power installations that are responsible for maintaining the operation and profitability of a facility.

**Applications and benefits**

- ■ Maximize profits by providing the highest output possible with the least amount of risk to availability.
- ■ Optimize availability and reliability of electrical systems and equipment.
- ■ Monitor power quality (PQ) for compliance and to prevent problems.
- ■ Meters fully supported by StruxureWare Power Monitoring Expert and PowerSCADA Expert Software.

**Main characteristics**

- ■ Precision metering:
- □ IEC 61557-12 PMD Sx K70 3000m 0.2 (performance measuring and monitoring functions).
- □ Class 0.2S accuracy IEC 62053-22, ANSI C12.20 Class 0.2 (active energy).
- □ Industry leading Class 0.5S* accuracy for reactive energy (IEC 62053-24).
- □ Cycle-by-cycle RMS measurements updated every ½ cycle.
- □ Full 'multi-utility' WAGES metering support.
- □ Net metering.
- □ Anti-tamper protection seals.

- ■ PQ compliance reporting and basic PQ analysis.
- □ Monitors and logs parameters in support of international PQ standards,
  - IEC 61000-4-30 Class S
  - IEC 62586 PQI-S
  - EN 50160
- □ Generates onboard PQ compliance reports accessible via onboard web pages:
  - Basic event summary and pass/fail reports, such as EN 50160 for power frequency, supply voltage magnitude, supply voltage dips, short and long interruptions, temporary over voltages, voltage unbalance and harmonic voltage.
  - ITIC (CBEMA) and SEMI curves, with alarm categorization to support further analyses.
  - NEMA Motor Derating curve.
  - Basic meter provides EN 50160 but can be configured to provide IEEE 519.
- □ Harmonic analysis:
  - THD on voltage and current, per phase, min/max, custom alarming.
  - Individual harmonic magnitudes and angles on voltage and current, up to the 63rd harmonic.
- □ High resolution waveform capture: triggered manually or by alarm, captured waveforms available directly from the meter via FTP in a COMTRADE format.
- □ Disturbance detection and capture: sag/swell on any current and voltage channel, alarm on disturbance event, waveform capture with per-event information.
- □ Patented disturbance direction detection: provides indication of the captured disturbance occurring upstream or downstream of the meter; timestamped results provided in the event log, with degree of certainty of disturbance direction.

- ■ Used with StruxureWare Power Monitoring Expert software, provides detailed PQ reporting across entire network:
- □ EN 50160 report.
- □ IEC 61000-4-30 report.
- □ PQ compliance summary.
- □ ISO 50001.
- □ Display of waveforms and PQ data from all connected meters.
- ■ Onboard data and event logging.
- □ 512MB of standard non-volatile memory. 10 MB of standard non-volatile memory dedicated to capture billing data, events, and waveforms.

*Certification pending

# PM8000 series
## Functions and characteristics (cont.)

PB113670



**PowerLogic remote display.**

PB113671



**PowerLogic I/O module.**

PB113669



**PowerLogic PM8000 series meter with remote display.**

- □ No data gaps due to network outages or server downtime.
- □ Min/Max log for standard values.
- □ 50 user-definable data logs, recording up to 16 parameters on a cycle-by-cycle or other user definable interval.
- □ Continuous logging or 'snapshot' triggered by setpoint and stopped after defined duration.
- □ Trend energy, demand and other measured parameters.
- □ Forecasting via web pages: average, minimum and maximum for the next four hours and next four days.
- □ Time-of-use in conjunction with StruxureWare software.
- □ Event log: alarm conditions, metering configuration changes, and power outages, timestamped to 1 millisecond.

- ■ Alarming and control.
- □ 50+ definable alarms to log critical event data, trigger waveform recording, or perform control function.
- □ Trigger on any condition, with cycle-by-cycle and 1-second response time.
- □ Combine alarms using Boolean logic and to create alarm levels.
- □ Alarm notification via email text message.
- □ In conjunction with StruxureWare Power Monitoring Expert, software alarms and alarm frequency are categorized and trended for easy evaluation of worsening/improving conditions.

- ■ Excellent quality: ISO 9001 and ISO 14000 certified manufacturing.

**Usability**

- ■ Easy installation and setup.
- □ Panel and DIN rail mounting options, remote display option.
- □ Pluggable connectors.
- □ Free setup application simplifies meter configuration.

- ■ Front panel.
- □ Easy to read colour graphic display.
- □ Simple, intuitive menu navigation with multi-language (8) support.

- ■ Flexible remote communications.
- □ Multiple simultaneously operating communication ports and protocols allow interfacing with other automation systems; (e.g. waveforms, alarms, billing data, etc.) can be uploaded for viewing/analysis while other systems access real-time information.
- □ Supports Modbus, ION, DNP3, IEC 61850.
- □ Dual port Ethernet: 10/100base-TX; daisy-chaining capability removes need for additional switches.
- □ Create redundant network loop using Rapid Spanning Tree Protocol (RSTP) and managed Ethernet switches.
- □ Customize TCP/IP port numbers enable/disable individual ports.
- □ RS-485 2-wire connection, up to 115200 baud, Modbus RTU and ION protocols, DNP3 is also supported via RS-485.
- □ Ethernet to serial gateway with Modbus Master functionality, connecting to 31 downstream serial Modbus devices. Also supports Modbus Mastering over TCP/IP (Ethernet) network.
- □ Full function web server with factory and customizable pages to access real-time and PQ compliance data.
- □ Push historical data via email.
- □ Advanced security: Up to 16 configurable user accounts.

- ■ Time synchronization via:
- □ GPS clock (RS485) or IRIG-B (digital input) to +/- 1 millisecond.
- □ Also supports Network Time Protocol (NTP/SNTP) and time set function from StruxureWare software server.

**Adaptability**

- ■ ION™ frameworks allow customizable, scalable applications, object-oriented programming, compartmentalizes functions, and increases flexibility and adaptability.

# PM8000 series
## Functions and characteristics (cont.)

PB113686




**PowerLogic PM8000 series meter with I/O modules.**

□ Applications include: access and aggregate data from Modbus devices on serial port or across the network (Modbus TCP/IP), logging and/or processing data by totalizing, unit conversion or other calculations, applying complex logic for alarming or control operations, data visualization via web pages.

**Standard meter I/O**
■ 3 digital status/counter inputs.
■ 1 KY (form A) energy pulse output for interfacing with other systems.

**Modular I/O options**
■ Optional expansion modules (up to 4 per meter) add digital/analogue I/O.

Option modules include:

■ Digital module
□ 6 digital status/counter inputs.
□ 2 Form C relay outputs, 250 V, AC / 30 V DC, max current 8A at 250 V AC or 5 A at 24 V DC, 20k cycles (resistive).

■ Analogue module
□ 4 analogue inputs (4-20mA; 0-30 V).
□ 2 analogue outputs (4-20mA; 0-10 V) for interfacing with building management sensors and systems.

| Reference numbers | |
|---|---|
| **Meter** | **Description** |
| METSEPM8240 | DIN96 panel mount meter |
| METSEPM8243 | DIN rail mount meter |
| METSEPM8244 | DIN rail mount meter with remote display |
| **Accessories** | **Description** |
| METSEPM89RD96 | Remote display, 3 metre cable, mounting hardware for 30mm hole (nut & centering pin), mounting hardware for DIN96 cutout (92x92mm) adapter plate |
| METSEPM8000SK | Terminal covers for utility sealing |
| METSEPMAK | Adapters for mounting meter and remote display back to back & ANSI 4", 0.3 metre (1 ft.) Ethernet cable |
| METSECAB10 | Display Cable, 10 metres |
| METSEPM89M2600 | Digital I/O module (6 digital inputs & 2 relay outputs) |
| METSEPM89M0024 | Analogue I/O module (4 analogue inputs & 2 analogue outputs) |

# PM8000 series
## Functions and characteristics (cont.)

PB113696



**PowerLogic™ PM8000 bottom view DIN mounting.**

| Features guide | | PM8000 |
|---|---|---|
| **General** | | |
| Use on LV and MV systems | | ■ |
| Current accuracy (5A Nominal) | | 0.1 % reading |
| Voltage accuracy (57 V LN/100 V LL to 400 V LN/690 V LL) | | 0.1 % reading |
| Active energy accuracy | | 0.2 % |
| Number of samples/cycle or sample frequency | | 256 |
| **Instantaneous rms values** | | |
| Current, voltage, frequency | | ■ |
| Active, reactive, apparent power | Total and per phase | ■ |
| Power factor | Total and per phase | ■ |
| Current measurement range (autoranging) | | 0.05 - 10A |
| **Energy values** | | |
| Active, reactive, apparent energy | | ■ |
| Settable accumulation modes | | ■ |
| **Demand values** | | |
| Current | Present and max. values | ■ |
| Active, reactive, apparent power | Present and max. values | ■ |
| Predicted active, reactive, apparent power | | ■ |
| Synchronisation of the measurement window | | ■ |
| Setting of calculation mode | Block, sliding | ■ |
| **Power quality measurements** | | |
| Harmonic distortion | Current and voltage | ■ |
| Individual harmonics | Via front panel and web page | 63 |
| | Via StruxureWare software | 127 |
| Waveform capture | | ■ |
| Detection of voltage swells and sags | | ■ |
| Fast acquisition | 1/2 cycle data | ■ |
| EN 50160 compliance checking | | ■ |
| Customizable data outputs (using logic and math functions) | | ■ |
| **Data recording** | | |
| Min/max of instantaneous values | | ■ |
| Data logs | | ■ |
| Event logs | | ■ |
| Trending/forecasting | | ■ |
| SER (Sequence of event recording) | | ■ |
| Time stamping | | ■ |
| GPS synchronisation (+/- 1 ms) | | ■ |
| Memory (in Mbytes) | | 512 |
| **Display and I/O** | | |
| Front panel display | | ■ |
| Wiring self-test | | ■ |
| Pulse output | | 1 |
| Digital or analogue inputs(max) | | 27 digital<br>16 analogue |
| Digital or analogue outputs (max, including pulse output) | | 1 digital<br>8 relay<br>8 analogue |
| **Communication** | | |
| RS 485 port | | 1 |
| Ethernet port | | 2 |
| Serial port (Modbus, ION, DNP3) | | ■ |
| Ethernet port (Modbus/TCP, ION TCP, DNP3 TCP, IEC 61850 (2)) | | ■ |
| Ethernet gateway | | ■ |
| Alarm notification via email | | ■ |
| HTTP web server | | ■ |
| SNMP with custom MIB and traps for alarms | | ■ |
| SMTP email | | ■ |
| NTP time synchronization | | ■ |
| FTP file transfer | | ■ |

# PM8000 series
## Functions and characteristics (cont.)

| Electrical characteristics | | PM8000 |
|---|---|---|
| Type of measurement | | True rms to 256 samples per cycle |
| Measurement accuracy | Current & voltage | Class 0.2 as per IEC 61557-12 |
| | Active Power | Class 0.2 as per IEC 61557-12 |
| | Power factor | Class 0.5 as per IEC 61557-12 |
| | Frequency | Class 0.2 as per IEC 61557-12 |
| | Active energy | Class 0.2S IEC 62053-22 (In=5A)<br>Class 0.2 IEC 61557-12, ANSI C12.20 Class 0.2 |
| | Reactive Energy | Class 0.5S IEC 62053-24* |
| Data update rate | | 1/2 cycle or 1 second |
| Input-voltage characteristics | Specified accuracy voltage | 57 VLN/100 VLL to 400 VLN/690 VLL |
| | Impedance | 5 MΩ per phase |
| | Specified accuracy frequency<br>- Frequency | 42 to 69Hz<br>(50/60Hz nominal) |
| | Limit range of operation<br>- frequency | 20 to 450Hz |
| Input-current characteristics | Rated nominal current | 1A (0.5S), 5A (0.2S) , 10A (0.2 ANSI) |
| | Specified accuracy current range | Starting Current: 5mA<br>Accurate Range: 50mA - 10A |
| | Permissible overload | 200 A rms for 0.5s, non-recurring |
| | Impedance | 0.0003 Ω per phase |
| | Burden | 0.024 VA at 10A |
| Power supply | AC | 90-415 V AC ±10% (50/60Hz ± 10%) |
| | DC | 120-300 V DC ±10% |
| | Ride-through time | 100 ms (6 cycles at 60 Hz) min., any condition<br>200 ms (12 cycles at 60 Hz) typ., 120 V AC<br>500 ms (30 cycles at 60 Hz) typ., 415 V AC |
| | Burden | Meter Only: 18 VA max at 415 V AC, 6W at 300 V DC<br>Fully optioned meter: 36 VA max at 415 V AC, 17W at 300 V DC. |
| Input/outputs | Meter Base Only | 3 form A digital inputs (30 V AC/60 V DC)<br>1 form A (KY) solid state digital output (30V AC/60 V DC, 75mA). |
| | Optional | Digital - 6 form A digital inputs (30 V AC / 60 V DC) wetted + 2 form C relay outputs (250 V AC / 30 V DC, 8 A at 250 V AC or 5 A at 24 V DC) |
| | | Analogue - 4 analogue inputs (4-20mA, 0-30 V DC) + 2 analogue outputs (4-20mA, 0-10 V DC). |
| **Mechanical characteristics** | | |
| Weight | | Integrated Display Model 0.581 kg<br>DIN rail mounted Model 0.528 kg<br>IO modules 0.140 kg<br>Remote display 0.300 kg |
| IP degree of protection | | IP 54, UL type 12: Panel mount and Remote display, front.<br>IP 30: Panel mount rear, DIN rail mount, I/O modules. |
| Dimensions | Panel mount model | 96 x 96 x 77.5 mm |
| | DIN model | 90.5 x 90.5 x 90.8 mm |
| | Remote display | 96 x 96 x 27 mm |
| | IO modules | 90.5 x 90.5 x 22 mm |
| **Environmental conditions** | | |
| Operating temperature | | -25ºC to +70ºC |
| Remote Display Unit | | -25ºC to +60ºC |
| Storage temperature | | -40ºC to +85ºC |
| Humidity rating | | 5% to 95% non-condensing |
| Installation category | | III |
| Operating altitude (maximum) | | 3000m above sea level |

# PM8000 series
## Functions and characteristics (cont.)

| Electromagnetic compatibility | |
|---|---|
| Product standards | IEC 62052-11 and IEC 61326-1 |
| Immunity to electrostatic discharge | IEC 61000-4-2 |
| Immunity to radiated fields | IEC 61000-4-3 |
| Immunity to fast transients | IEC 61000-4-4 |
| Immunity to surges | IEC 61000-4-5 |
| Immunity to conducted disturbances | IEC 61000-4-6 |
| Immunity to power frequency magnetic fields | IEC 61000-4-8 |
| Immunity to conducted disturbances, 2-150kHz | CLC/TR 50579 |
| Immunity to voltage dips & interruptions | IEC 61000-4-11 |
| Immunity to ring waves | IEC 61000-4-12 |
| Conducted and radiated emissions | EN 55022, EN 55011, FCC part 15, ICES-003 |
| Surge withstand Capability (SWC) | IEEE C37.90.1 |
| **Safety** | |
| Safety Construction | IEC/EN 61010-1 ed.3, CAT III, 400 VLN / 690 V LL<br>UL 61010-1 ed.3 and CSA-C22.2 No. 61010-1 ed.3, CAT III, 347 V LN / 600 V LL<br>IEC/EN 62052-11, protective class II |
| **Communication** (1) | |
| Ethernet to serial line gateway | Communicates directly with up to 32 unit load ION slave devices. |
| Web server | Customisable pages, new page creation capabilities, HTML/XML compatible. |
| Serial port RS 485 | Baud rates of 2400 to 115200, pluggable screw terminal connector. |
| Ethernet port(s) | 2x 10/100Base-TX, RJ45 connector (UTP). |
| Protocol | Modbus, ION, DNP3, IEC 61850, HTTP, FTP, SNMP, SMTP, DPWS, RSTP, NTP, SNTP, GPS protocols. |
| **Firmware characteristics** | |
| High-speed data recording | Down to 1/2 cycle interval burst recording, stores detailed characteristics of disturbances or outages. Trigger recording by a user-defined setpoint, or from external equipment. |
| Harmonic distortion | Up to 63rd harmonic (127th via StruxureWare software) for all voltage and current inputs. |
| Sag/swell detection | Analyse severity/potential impact of sags and swells: magnitude and duration data suitable for plotting on voltage tolerance curves per phase triggers for waveform recording, control. |
| Disturbance direction detection | Determine the location of a disturbance more quickly and accurately by determining the direction of the disturbance relative to the meter. Analysis results are captured in the event log, along with a timestamp and confidence level indicating level of certainty. |
| Instantaneous | High accuracy of standard speed (1s) and high-speed (1/2 cycle) measurements, including true rms per phase and total for:<br>voltage, current, active power (kW),reactive power (kvar), apparent power (kVA), power factor, frequency, voltage and current unbalance, phase reversal. |
| Load profiling | Channel assignments (800 channels via 50 data recorders) configurable for any measurable parameter, including historical trend recording of energy, demand, voltage, current, power quality, or any measured parameter. Trigger recorders based on time interval, calendar schedule, alarm/event condition, or manually. |
| Trend curves | Historical trends and future forecasts to better manage demand, circuit loading, and other parameters. Provides average, min, max and standard deviation every hour for last 24 hours, every day for last month, every week for last 8 weeks and every month for last 12 months. |
| Waveform captures | Simultaneous capture of all voltage and current channels sub-cycle disturbance capture, maximum cycles is 100,000 (16 samples/cycle x 96 cycles, 10MBytes memory), max 256 samples/cycle. |
| Alarms | Threshold alarms: adjustable pickup and dropout setpoints and time delays, numerous activation levels possible for a given type of alarm, user-defined or automatic alarm threshold settings, user-defined priority levels (optional automatic alarm setting). |

***(1)** All the communication ports may be used simultaneously.*

# PM8000 series
## Functions and characteristics (cont.)

| Firmware characteristics (cont.) | |
|---|---|
| Advanced security | Up to 16 users with unique access rights. Perform resets, time sync, or meter configurations based on user privileges. |
| Memory | 512MB (10MB for programming and interval logging). |
| Firmware update | Update via the communication ports. |
| **Display characteristics** | |
| Integrated or Remote display | 320x240 (1/4 VGA) Colour LCD, configurable screens , 5 buttons and 2 LED indicators (alarm and meter status). |
| Languages | English, French, Spanish, Russian, Portugese,German, Italian, Chinese. |
| Notations | IEC, IEEE. |
| **The HMI menu includes** | |
| Alarms | Active alarms, historic alarms. |
| Basic Reading | Voltage, current, frequency, power summary. |
| Power | Power summary, demand, power factor. |
| Energy | Energy total, delivered, received. |
| Events | Timestamped verbose event log. |
| Power Quality | EN 50160, harmonics, phasor diagrams. |
| Inputs/Outputs | Digital inputs, digital outputs, analogue inputs, analogue outputs. |
| Nameplate | Model, serial and FW version. |
| Custom Screens | Build your own metrics. |
| Setup Menu | Meter setup, communications setup, display setup, date/time/clock setup, alarm setup, language setup, time of use setup, resets, password setup. |

Schneider Electric Industries SAS
35, Rue Joseph Monier,
CS 30323
F - 92506 Rueil Malmaison Cedex

RCS Nanterre 954 503 439
Capital social 896 313 776
www.schneider-electric.com

As standards, specifications and designs develop from time to time, please ask for confirmation of the information given in this document.

Design: Schneider Electric
Photos: Schneider Electric

© 2015 - Schneider Electric - All rights reserved

PLSED310058EN

07-2015

THIS PAGE WAS INTENTIONALLY LEFT BLANK

# Section 1—General Information

## Introduction

PowerPact® M-frame, P-frame and R-frame and Compact® NS630b–NS3200 electronic trip molded case circuit breakers are designed to protect electrical systems from damage caused by overloads, short circuits, and ground faults. All circuit breakers are designed to open and close a circuit by nonautomatic means and to open the circuit automatically on a predetermined overcurrent. Electronic trip molded case circuit breakers use an electronic trip system to signal the circuit breaker to open automatically.

The PowerPact M-frame (800 A frame size), P-frame (1200 A frame size) and R-frame (2500 A frame size) circuit breakers are dual rated to UL489 and IEC 60947-2. The Compact NS630b–NS1600 (1600 A frame size) and NS1600b–NS3200 (3200 A frame) circuit breakers are rated to IEC 60947-2 only.

M-frame molded case circuit breakers are equipped with a basic ET1.0I electronic trip system, which has a fixed long-time (overload) setting and an adjustable instantaneous (short-circuit) trip setting. P-frame, R-frame and NS630b–NS3200 molded case circuit breakers are available with a basic ET 1.0I electronic trip system and with a more advanced Micrologic® trip system. Electronic trip motor circuit protectors (trip system ET 1.0M), which trip on short circuit only, and automatic molded case switches, which trip at a predetermined self-protection level only, are also available for special applications. All of these circuit breakers are available brand labeled as Square D, Merlin Gerin or Federal Pacific.

For information on other molded case circuit breakers manufactured by Square D, see the data bulletins *Thermal-Magnetic and Magnetic-Only Molded Case Circuit Breaker, Class 601* and *Electronic Trip Molded Case Circuit Breakers, Class 602*.

## Features and Benefits

M-frame, P-frame, R-frame and NS630b–NS3200 electronic trip circuit breakers:

- Provide overload and short-circuit protection
- Are true RMS sensing devices
- Provide means to manually disconnect power to the circuit
- Provide enhanced coordination by their adjustability
- Provide high interrupting ratings and withstand ratings

Circuit breakers with Micrologic trip units can also:

- Provide integral equipment ground-fault protection or alarm
- Provide communications
- Provide power monitoring
- Provide protective relaying functions
- Provide zone-selective interlocking (ZSI), which can reduce damage in the event of a fault

## Specifications

Electronic trip molded case circuit breakers have a molded case made of a glass-reinforced insulating material (thermal set composite resin) that provides high dielectric strength. These circuit breakers:

- Are available in either dual-rated UL/IEC or IEC-only constructions
- Dual-rated UL/IEC circuit breakers are also CSA and ANCE certified
- Are manufactured in unit-mount, I-Line® and drawout (P-frame and NS630b–NS1600) constructions
- Are available with either type ET or Micrologic electronic tripping systems
- Provide optional power monitoring, communications, protective relaying, integral ground-fault protection for equipment and zone-selective interlocking functions


© 2007 Schneider Electric All Rights Reserved

- Share common tripping of all poles
- Can be mounted and operated in any position
- Are equipped with an externally-accessible test port for use with hand-held and full-function test sets
- Are available in motor circuit protector and automatic molded case switch constructions
- Can be reverse connected, without restrictive LINE and LOAD markings
- Meet the requirements of NEC® Sections 240.6 by providing a means to seal the rating plug and trip unit adjustments

## Codes and Standards

M-frame, P-frame, R-frame and NS630b–NS3200 electronic trip circuit breakers and switches are manufactured and tested in accordance with the following standards:

**Table 1: Standards**

| M-Frame, P-Frame and R-Frame Circuit Breakers | P-Frame and R-Frame Switches | NS630b–NS3200 Circuit Breakers | NS630b–NS3200 Switches |
|---|---|---|---|
| UL 489[1]<br>IEC Standard 60947-2<br>CSA 22.2 No 5-02<br>Federal Specification<br>W-C-375B/GEN<br>NEMA AB1<br>NMX J-266<br>UTE, VDE, BS, CEI, UNE | UL 489[2]<br>IEC Standard 60947-3<br>CSA 22.2 No 5-02<br>Federal Specification<br>W-C-375B/GEN<br>NEMA AB1<br>NMX J-266<br>UTE, VDE, BS, CEI, UNE | IEC Standard 60947-2<br>Federal Specification<br>W-C-375B/GEN<br>NEMA AB1<br>UTE, VDE, BS, CEI, UNE | IEC Standard 60947-3<br>Federal Specification<br>W-C-375B/GEN<br>NEMA AB1<br>UTE, VDE, BS, CEI, UNE |

1 PowerPact® M-frame circuit breaker is in UL File E10027.
PowerPact P-frame circuit breaker is in UL File E63335.
PowerPact R-frame circuit breaker is in UL FIle E10027.

2 PowerPact P-frame switch is in UL File E103740.
PowerPact R-frame switch is in UL FIle E33117.

Circuit breakers should be applied according to guidelines detailed in the National Electrical Code® (NEC®) and other local wiring codes.

## Circuit Breaker Ratings

### Interrupting Rating

The interrupting rating is the highest current at rated voltage the circuit breaker is designed to safely interrupt under standard test conditions. Circuit breakers must be selected with interrupting ratings equal to or greater than the available short-circuit current at the point where the circuit breaker is applied to the system (unless it is a branch device in a series rated combination). Interrupting ratings are shown on the front of the circuit breaker.

**Table 2: UL/IEC Circuit Breaker Interrupting Ratings**

| Circuit Breaker | UL/CSA Rating (60 Hz) | | | | | | IEC 60947-2 Rating (50/60 Hz) | | | |
|---|---|---|---|---|---|---|---|---|---|---|
| | 3 Phase | | | Grounded B Phase | | | 240 Vac | | 380/415 Vac | |
| | 240 Vac | 480 Vac | 600 Vac | 240 Vac 2P | 240 Vac 3P | 480 Vac 3P | Icu | Ics | Icu | Ics |
| MG | 65 kA | 35 kA | 18 kA | 65 kA | 65 kA | 35 kA | 50 kA | 25 kA | 35 kA | 20 kA |
| MJ | 100 kA | 65 kA | 25 kA | 65 kA | 65 kA | 35 kA | 65 kA | 35 kA | 50 kA | 25 kA |
| PG | 65 kA | 35 kA | 18 kA | 65 kA | 65 kA | 35 kA | 50 kA | 25 kA | 35 kA | 20 kA |
| PJ | 100 kA | 65 kA | 25 kA | 65 kA | 100 kA | 14 kA | 65 kA | 35 kA | 50 kA | 25 kA |
| PK | 65 kA | 50 kA | 50 kA | 65 kA | 65 kA | 35 kA | 50 kA | 25 kA | 50 kA | 25 kA |
| PL | 125 kA | 100 kA | — | 65 kA | 100 kA | 14 kA | 125 kA | 65 kA | 85 kA | 45 kA |
| RG | 65 kA | 35 kA | 18 kA | — | 65 kA | 35 kA | 50 kA | 25 kA | 35 kA | 20 kA |
| RJ | 100 kA | 65 kA | 25 kA | 100 kA | 100 kA | 35 kA | 65 kA | 35 kA | 50 kA | 25 kA |
| RK | 65 kA | 65 kA | 65 kA | — | 65 kA | 35 kA | 85 kA | 65 kA | 70 kA | 55 kA |
| RL | 125 kA | 100 kA | 50 kA | 125 kA | 125 kA | 35 kA | 125 kA | 65 kA | 85 kA | 45 kA |

© 2007 Schneider Electric All Rights Reserved

**Table 3: IEC Only Circuit Breaker Interrupting Ratings (50/60 Hz)**

| Circuit Breaker | 220/240 Vac | | 380/415 Vac | | 440 Vac | | 500/525 Vac | | 660/690 Vac | |
|---|---|---|---|---|---|---|---|---|---|---|
| | Icu | Ics | Icu | Ics | Icu | Ics | Icu | Ics | Icu | Ics |
| NS630b–NS1600 N Interrupting Rating | 50 kA | 75% Icu | 50 kA | 75% Icu | 50 kA | 75% Icu | 40 kA | 75% Icu | 30 kA | 75% Icu |
| NS630b–NS1600 H Interrupting Rating | 70 kA | 50% Icu | 70 kA | 50% Icu | 65 kA | 50% Icu | 50 kA | 50% Icu | 42 kA | 50% Icu |
| NS630b–NS1000 L Interrupting Rating | 150 kA | 100% Icu | 150 kA | 100% Icu | 130 kA | 100% Icu | 100 kA | 100% Icu | 25 kA | 100% Icu |
| NS1600b–NS3200 N Interrupting Rating | 85 kA | 75% Icu | 70 kA | 75% Icu | 65 kA | 100% Icu | 65 kA | 100% Icu | 65 kA | 100% Icu |
| NS1600b–NS3200 H Interrupting Rating | 125 kA | 75% Icu | 85 kA | 75% Icu | 85 kA | 75% Icu | — | — | — | — |

## Application Ratings

The voltage rating is the highest voltage for the electrical system on which the circuit breaker can be applied. The frequency rating indicates the system frequency for which the circuit breaker is intended. The withstand rating is used to improve system coordination by maximizing the current level at which the circuit breaker trips with no intentional delay. The withstand rating is the level of RMS symmetrical current that a circuit breaker can carry in a closed position for a stated period of time.

**Table 4: Voltage, Frequency and Withstand Ratings**

| Circuit Breaker | Voltage Rating | Frequency Rating[1] | Withstand Rating at 480 Vac[2] |
|---|---|---|---|
| MG, MJ | 600 Vac | 60 Hz (UL), 50/60 Hz (IEC) | 10 kA (0.5 sec) |
| PG, PK | 600 Vac | 60 Hz (UL), 50/60 Hz (IEC) | 25 kA (0.5 sec) |
| PJ | 600 Vac | 60 Hz (UL), 50/60 Hz (IEC) | 10 kA (0.5 sec) |
| PL | 480 Vac | 60 Hz (UL), 50/60 Hz (IEC) | 10 kA (0.5 sec) |
| R-frame (RG, RJ, RK, RL) | 600 Vac | 60 Hz (UL), 50/60 Hz (IEC) | 32 kA (3 sec) |
| NS630b–NS1600 N interrupting rating | 690 Vac | 50/60 Hz (IEC) | 25 kA (0.5 sec) |
| NS630b–NS1600 H interrupting rating | 690 Vac | 50/60 Hz (IEC) | 25 kA (0.5 sec) |
| NS630b–NS1000 L interrupting rating | 690 Vac | 50/60 Hz (IEC) | 10 kA (0.5 sec) |
| NS1600b–NS3200 N interrupting rating | 690 Vac | 50/60 Hz (IEC) | 32 kA (3 sec) |
| NS1600b–NS3200 H interrupting rating | 440 Vac | 50/60 Hz (IEC) | 32 kA (3 sec) |

[1] May also be used at 400 Hz with derating, see data bulletin *Determining Current-Carrying Capacity in Special Applications*.

[2] A system coordination study should be done for optimum circuit breaker coordination.

## Ampere Rating (Continuous Current Rating)

The ampere rating (or continuous current rating) (Ir) is the maximum current that a circuit breaker can carry. The sensor size (In) is the maximum ampere rating for a specific circuit breaker and is based on the size of the sensor plug inside the circuit breaker (sensor plugs are an integral part of the circuit breaker and cannot be removed or replaced). This value is printed below the trip unit on the sensor plug.

**NOTE:** The maximum ampere rating a circuit breaker family can carry is called the frame size. Sensor size is less than or equal to frame size.

The ampere rating of a type ET electronic trip circuit breaker is equal to the current sensor size (In).

The ampere rating of a Micrologic® electronic trip circuit breaker is determined by the mathematical equation:

Ampere Rating = Sensor Size x Rating Plug Setting (Ir = In x Rating Plug Setting)

The rating plug varies the circuit breaker ampere rating as a function of its sensor size. Rating plugs have nine dial settings; the multiplier values corresponding with each setting are printed on the rating plug. The maximum setting range is 0.4–1.0 x In.


© 2007 Schneider Electric All Rights Reserved

## Enclosure Sizes

All ET electronic trip UL/IEC M-frame, P-frame and R-frame circuit breakers are available as standard rated circuit breakers. Micrologic electronic trip UL/IEC circuit breakers are also available in 100% rated constructions. Because the additional heat generated when applying circuit breakers at 100% of continuous current rating, the use of specially designed enclosures and 90°C (194° F) rated wire sized per the 75°C (167° F) NEC chart is required

Circuit breakers with 100% rating can also be used in applications requiring only 80% continuous loading.

**Table 5: Minimum Enclosure Sizes for Fixed-Mounted Circuit Breakers**

| Circuit Breaker Rating | Enclosure Dimensions (h x w x d) in/[mm] | | Ventilation Area | | | |
|---|---|---|---|---|---|---|
| | 3P Circuit Breaker | 4P Circuit Breaker | Top | | Bottom | |
| M-Frame, ≤ 800 A, Standard Rated | 51.9 x 20.25 x 7.75 [1318.3 x 514.4 x 196.9] | 51.9 x 23.01 x 7.75 [1318.3 x 584.4 x 196.9] | — | — | — | — |
| P-Frame, ≤ 800 A, 100% Rated<br>P-Frame, ≤ 1200 A, Standard Rated | 51.9 x 20.25 x 7.75 [1318.3 x 514.4 x 196.9] | 51.9 x 23.01 x 7.75 [1318.3 x 584.4 x 196.9] | — | — | — | — |
| P-Frame, > 1200 A, 100% Rated | 62.25 x 23 x 14.75 [1581.2 x 584.2 x 374.7] | 62.25 x 25.76 x 14.75 [1581.2 x 654.2 x 374.7] | 16.5 $in.^2$ | 10,645 $mm^2$ | 16.5 $in.^2$ | 10,645 $mm^2$ |
| R-Frame, Standard Rated[1] | 30 x 21 x 7 [762 x 533 x 178] | 30 x 25.5 x 7 [762 x 648 x 178] | — | — | — | — |
| R-Frame, 100% Rated[1] | 30 x 21 x 7 [762 x 533 x 178] | 30 x 25.5 x 7 [762 x 648 x 178] | 40.25 $in.^2$ | 26,000 $mm^2$ | 40.25 $in.^2$ | 26,000 $mm^2$ |

[1] RLTB or RL3TB kits may extend beyond end of enclosure when using minimum enclosure size.

## Operating Conditions

### Temperature

To meet the requirements of the UL489 Standard, molded case circuit breakers are designed, built and calibrated for use on 50/60 Hz ac systems in a 40°C (104°F) ambient environment. Electronic trip circuit breakers, however, are designed to react only to the magnitude of the current flowing through the circuit breaker and are inherently ambient insensitive. Both UL/IEC and IEC-only circuit breakers may be operated at temperatures between -25°C and +70°C (-13°F and158°F). For temperatures other than 40°C (104°F), the circuit breakers must be re-rated as shown.

**Table 6: Temperature Rerating Values per ANSI C37.20.1**

| Maximum Ambient Temperature | | | | | | | | | | | |
|---|---|---|---|---|---|---|---|---|---|---|---|
| **°F** | 140 | 122 | **104** | 86 | 77 | 68 | 50 | 32 | 14 | -4 | -22 |
| **°C** | 60 | 50 | **40** | 30 | 25 | 20 | 10 | 0 | -10 | -20 | -30 |
| **Current** | 0.83 | 0.92 | **1.00** | 1.07 | 1.11 | 1.14 | 1.21 | 1.27 | 1.33 | 1.39 | 1.44 |

### Altitude

CIrcuit breakers are suitable for use at altitudes up to 13,100 ft. (4000 m). For altitudes higher than 6560 ft. (2000 m), circuit breakers must be derated as shown.

**Table 7: Altitude Rerating Values Per ANSI C37.20.1 Table 10**

| Altitude | ≤ 6,600 ft. (≤ 2,000 m) | 8,500 ft. (2,600 m) | 13,000 ft. (3,900 m) |
|---|---|---|---|
| **Voltage** | 1.00 | 0.95 | 0.80 |
| **Current** | 1.00 | 0.99 | 0.96 |

© 2007 Schneider Electric All Rights Reserved

### Extreme Atmospheric Conditions

PowerPact® circuit breakers have successfully passed the tests defined below for extreme atmospheric conditions.

Dry cold and dry heat:

- IEC 68-2-1—Dry cold at -55°C
- IEC 68-2-2—Dry heat at +85°C

Damp heat (tropicalization)

- IEC 68-2-30—Damp heat (temperature 55°C and relative humidity of 95%)
- IEC 68-2-52 level 2—Salt mist

The materials used in the PowerPact circuit breakers will not support the growth of fungus and mold.

### Vibration

PowerPact circuit breakers meet IEC 60068-2-6 Standards for vibration.

- 2 to 13.2 Hz and amplitude 0.039 in. (1 mm)
- 13.2 to 100 Hz constant acceleration

### Storage Temperature

Circuit breakers with trip units without LCD displays may be stored in the original packaging at temperatures between -58°F (-50°C) and 185°F (85°C). For circuit breakers with trip units with LCD displays, this range is -40°F (-40°C) to 185°F (85°C).

## Trip System

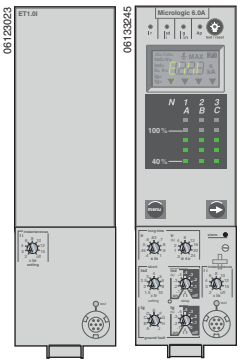


ET
Electronic
Trip Unit

Micrologic
Electronic
Trip Unit

The trip system causes the circuit breaker to open automatically under overload, short-circuit or equipment ground-fault conditions. Electronic trip circuit breakers give the customer more versatility to achieve coordination with features such as adjustable instantaneous pickup and high withstand ratings.

The ET and Micrologic trip systems consist of current sensors, a microprocessor-based trip unit, and a tripping coil. The tripping coil is a flux transfer solenoid that requires no external power source. All ET and Micrologic protective functions are completely fault powered.

### Micrologic Trip System

Features found in Micrologic® electronic trip circuit breakers, such as universally interchangeable rating plugs, adjustable long-time pickups and 100% ratings also provide capacity for future growth.

The integral equipment ground-fault sensing capabilities available with Micrologic trip systems mean that there are fewer parts and pieces to purchase, mount and wire. These capabilities include integral ground-fault protection for equipment, which causes the circuit breaker to trip when a ground fault is detected, as well as integral ground-fault alarm, which does not trip the circuit breaker but sends an alarm when a ground fault is detected.

Certain Micrologic trip systems also offer the customer true power management system solutions through communication. These trip units can communicate with other circuit breakers in the system and also with a power monitoring system. Communication is by Modbus® and does not require proprietary software.

Communication between trip units allows zone-selective interlocking (ZSI) between circuit breakers at different levels in the system. ZSI reduces fault stress by allowing the upstream circuit breaker closest to the fault to ignore its preset delay time and trip without any intentional delay on a short circuit or ground fault. For more information on ZSI, see data bulletin *Reducing Fault Stress with Zone-Selective Interlocking.*


© 2007 Schneider Electric All Rights Reserved

Communication with a power monitoring system through a communications network allows a ground fault to be reported without interrupting power to the system. It also allows the power monitoring system to remotely report power usage, current flow, and trip history.

### Instantaneous OFF Feature

Micrologic® 5.0 and 6.0 Standard, A, P and H electronic trip units provide the unique ability to turn the instantaneous tripping function OFF. Turning off the instantaneous trip function increases the current level at which the circuit breaker will trip with no intentional delay to the level of the short-time withstand rating. This current level is typically much higher than any of the pickup levels provided by the adjustable instantaneous feature. Therefore, using the instantaneous OFF feature improves coordination by allowing the user to take advantage of the circuit breaker withstand rating.

## Motor Circuit Protectors

An instantaneous trip version of the electronic trip circuit breaker is also available for motor circuit protection. These motor circuit protectors comply with NEC requirements for providing short-circuit protection when installed as part of a Listed combination controller having motor overload protection.

Electronic trip motor circuit protectors are similar in construction to ET electronic trip circuit breakers.They are designed as disconnect devices for use in combination with motor starters. These motor circuit protectors provide short-circuit protection only and have an adjustable amperage pickup so they can be set to open instantaneously at current values slightly above the motor starting inrush current. This setting coordinates the pickup time-current response of the motor circuit protector with the overload relay of the motor starter to give the best possible protection.

Current interrupting ratings for these UL Recognized components are established in combination with motor starters and properly-sized overload relays and contactors.

## Automatic Molded Case Switches

P-frame, R-frame and NS630b–NS3200 circuit breakers are also available in automatic molded case switch construction. Automatic switches are similar in construction to electronic trip circuit breakers, except that the switches open instantaneously at a factory-set non-adjustable trip point calibrated to protect only the molded case switch itself. Because of their molded case construction, they are more compact than conventional disconnect switches and accept electrical accessories for added flexibility.

Molded case switches are intended for use as disconnect devices only. UL489 requires molded case switches to be protected by a circuit breaker or fuse of equivalent rating. Molded case switches are labeled with their appropriate withstand ratings. The withstand rating of a switch is defined as the maximum current at rated voltage that the molded case switch will withstand without damage when protected by a circuit breaker with an equal continuous current rating.

**Table 8: P-, and R-Frame Withstand Ratings[1]**

| Voltage | Interrupting Rating | | | |
|---|---|---|---|---|
| | G | J | K | L |
| 240 Vac | 65 kA | 100 kA | 65 kA | 125 kA |
| 480 Vac | 35 kA | 65 kA | 50 kA | 100 kA |
| 600 Vac | 18 kA | 25 kA | 50 kA | 50 kA |

[1] The withstand rating is the fault current at rated voltage that the molded case switch will withstand without damage when protected by a circuit breaker with an equal continuous current rating.

© 2007 Schneider Electric All Rights Reserved

## Internal Operating Mechanism

### Manually-Operated Circuit Breakers

M-frame, P-frame, R-frame and NS630b–NS3200 manually-operated circuit breakers have a single operating handle that acts directly through the operating mechanism against the contact blades. Multi-pole circuit breakers have a common trip bar for positive action of all poles on manual and automatic operation. These circuit breakers have a trip-free mechanism that allows them to trip even though the operating handle may be restricted (by a handle operating mechanism or padlock attachment) in the I/ON position. If not restricted, the operating handle moves to a position between I/ON and O/OFF when the circuit breaker is tripped.

The face of the manually-operated circuit breakers is marked with standard ON/OFF and international I/O markings to indicate handle position. In addition, the I/OFF portion of the circuit breaker handle is color coded green.

### Electrically-Operated Circuit Breakers

P-frame and NS630b–NS1600 circuit breakers are also available with a two-step stored-energy mechanism which can be charged manually or using a motor. The closing time is less than five cycles. Closing and opening operations can be initiated by remote control or by push buttons on the front cover. An O-C-O (open-close-open) cycle is possible without recharging.

The face of electrically-operated circuit breakers is also marked ON/OFF and I/O, and equipped with a position indicator to show contact position.

## Push-to-Trip Button

The push-to-trip button located on the face of each manually-operated circuit breaker is a standard feature on these circuit breakers. This allows the user to manually trip the circuit breaker without risking exposure to live parts. During normal on-off operation, the handle opens and closes the circuit breaker contact but does not exercise the tripping mechanism.

Use the push-to-trip button to:

- Exercise the circuit breaker mechanism
- Check the auxiliary and alarm switch circuits

## Circuit Breaker Mounting and Connections

### Unit-Mount Circuit Breakers

**Table 9: Circuit Breaker Mounting and Connections**

| Circuit Breaker | Unit-mount Construction | | I-Line® Construction | Drawout Construction |
|---|---|---|---|---|
| | Cable Connection | Bus Connection | | |
| M-Frame | X | X | X | — |
| P-Frame | X | X | X | X |
| R-Frame | X[1] | X | X[2] | — |
| NS630b–NS1250 | X | X | — | — |
| NS1600–NS3200 | — | X | — | — |

1 Must use RLTB terminal pad kit

2 Through 1200 A, 100% rated only

Fixed-mounted M-frame, P-frame, R-frame and NS630b–NS3200 individually-mounted circuit breakers are supplied with four mounting screws. These mounting screws are inserted through mounting holes molded into the circuit breaker case and threaded into the circuit breaker mounting enclosure. To properly support the circuit breaker, all four mounting screws must be used.


© 2007 Schneider Electric All Rights Reserved

Unit-mount M-frame, P-frame and NS630b–NS1250 circuit breakers can be ordered with mechanical line and load side lugs. The standard lugs can be removed for the installation of compression-type lugs or bus connections. All lugs are UL Listed for their proper application and marked for use with aluminum and copper (Al/Cu) or copper only (Cu) conductors. Lugs suitable for copper and aluminum conductors are made of tin-plated aluminum. Lugs suitable for use with copper conductors only are made of copper.

See individual frame sections for frame-specific connection information.

### I-Line® Circuit Breakers

M-frame circuit breakers through 800 A and P-frame and R-frame circuit breakers through 1200 A are available in I-Line construction for easy installation and removal in I-Line panelboards and switchboards. I-Line circuit breakers use “blow-on” type line side connectors. In case of a short circuit, increased magnetic flux causes the plug-on connectors of the circuit breaker to tighten their grasp on the panelboard or switchboard bus bars. The I-Line connectors and circuit breaker mounting bracket are integral parts of I-Line circuit breakers and cannot be removed or replaced. I-Line circuit breakers come with mechanical load side lugs.

### Drawout Circuit Breakers

P-frame manually-operated circuit breakers and switches are also available in drawout construction. The drawout assembly mechanism allows the circuit breaker to be racked in four positions (connected, test, disconnect or withdrawn).

P-frame cradles are ordered separately and are available with factory and field-installed accessories. See Section 8—Accessories for details.

## Catalog Numbering System

The M-frame, P-frame, R-frame and NS630b–NS3200 circuit breakers and cradles follow a “smart” catalog numbering system. The following tables are intended as a tool to decipher existing catalog numbers. **They are not intended for use in building catalog numbers, as some combinations may not be available.** To build a catalog number, please see the *Digest*, the product selector or contact the local field office.

### M-Frame, P-Frame and R-Frame Circuit Breaker Catalog Numbers

**Table 10: Catalog Number for M-Frame, P-Frame and R-Frame (UL/IEC Dual-rated) Circuit Breakers**

| Field Position | Field Description | Options | Description |
|---|---|---|---|
| 1 | Brand Name | (blank) | Square D® |
| | | N | Merlin Gerin® |
| | | F | Federal Pioneer® |
| | | P | Federal Pacific® |
| 2 | Circuit Breaker Frame | M | 800 A Max. |
| | | P | 1200 A Max. |
| | | R | 3000 A Max. |
| 3 | Interrupting Rating | G | 35 kA @ 480 Vac |
| | | J | 65 kA @ 480 Vac |
| | | K[1] | P-Frame: 50 kA @ 600 Vac<br>R-Frame: 65 kA @ 600 Vac |
| | | L[1] | 100 kA @ 480 Vac |

*Continued on next page*

© 2007 Schneider Electric All Rights Reserved

**Table 10: Catalog Number for M-Frame, P-Frame and R-Frame (UL/IEC Dual-rated) Circuit Breakers** *(continued)*

| Field Position | Field Description | Options | Description |
|---|---|---|---|
| 4 | Connection | F | No Lugs |
| | | L | Lugs on Both Ends |
| | | M | Lugs on I/ON End |
| | | P | Lugs on O/OFF End |
| | | A | I-Line |
| | | D[1] | Drawout |
| 5 | Poles | 2 | 2P |
| | | 3 | 3P |
| | | 4[1] | 4P |
| 6 | Voltage Rating | 4 | 480 V |
| | | 6 | 600 V |
| 7–9 | Ampere Rating | ### | Circuit Breaker Rating |
| | | 000[1] | Automatic Switch Value |
| 10 | Standard or 100% Rated | (none) | Standard Rated |
| | | C[1] | 100% rated |
| 11–14 | Circuit Breaker Trip System | (none) | ET1.0 (M-Frame) |
| | | (none) | ET1.0I (P-Frame, R-Frame) |
| | | U31[1] | Micrologic® 3.0 Trip Unit |
| | | U33[1] | Micrologic 5.0 Trip Unit |
| | | U41[1] | Micrologic 3.0A Trip Unit |
| | | U43[1] | Micrologic 5.0A Trip Unit |
| | | U44[1] | Micrologic 6.0A Trip Unit |
| | | U63[1] | Micrologic 5.0P Trip Unit |
| | | U64[1] | Micrologic 6.0P Trip Unit |
| | | U73[1] | Micrologic 5.0H Trip Unit |
| | | U74[1] | Micrologic 6.0H Trip Unit |
| | Automatic Switch Trip System | S60[1] | 600 A |
| | | S80[1] | 800 A |
| | | S10[1] | 1000 A |
| | | S12[1] | 1200 A |
| | | S16[1] | 1600 A |
| | | S20[1] | 2000 A |
| | | S25[1] | 2500 A |
| | Motor Circuit Protector Trip System | M68[1] | 1200–9600 A |
| | | M69[1] | 1500–9600 A |
| | | M70[1] | 1800–9600 A |
| 15 | Rating Plug | A–H[1] | See Table 66 |
| 16-17 | Modbus® Communication | E1[1] | Modbus BCM |
| 18 | I-Line® Phasing | See *Digest, Product Selector* | |
| For Factory-Installed Accessories, See *Product Selector* | | | |

[1] Not available on M-frame circuit breakers.


© 2007 Schneider Electric All Rights Reserved

- *Dielectric Withstand*—the circuit breaker is subjected to twice the voltage rating at which the interrupting test was conducted, but not less than 900 V.

  Between line and load terminals with the circuit breaker in the tripped and in the OFF positions.

  Between terminals of opposite polarity with the circuit breaker closed.

  Between live parts and the overall enclosure with the circuit breaker both open and closed.

When the sample circuit breakers pass these tests, circuit breakers of the same construction can be marked or labeled with the current interrupting rating for the higher fault currents.

### IEC Requirements

The IEC markings on a circuit breaker indicates that the circuit breaker meets the requirements of IEC Standard 60947-2 for circuit breakers and 60947-3 for automatic switches. These requirements include the following tests:

**Table 14: IEC Test Sequence**

| Sequence | Category of Devices | Tests |
|---|---|---|
| General Performance Characteristics (Sequence 1) | All Circuit Breakers | • Tripping Limits and Characteristics<br>• Dielectric Properties<br>• Mechanical and Electrical Endurance<br>• Overload<br>• Dielectric Voltage Withstand<br>• Temperature Rise<br>• 145% Calibration (3 Poles in Series or 3-Phase Test) |
| Rated Service Short-circuit Breaking Capacity (Ics) (Sequence 2) | All Circuit Breakers | • Rated service short circuit breaking capacity (O-t-CO-t-CO)<br>• Electrical Endurance (5% of with Current Operations of Sequence 1)<br>• Dielectric Voltage Withstand<br>• Temperature Rise<br>• 145% Calibration (3 poles in series or 3-phase test) |
| Rated Ultimate Short-circuit Breaking Capacity (Icu) (Sequence 3) | Circuit Breakers of Utilization Category A<br>Circuit Breakers of Utilization Category B | • 200% Calibration (Each Pole Separately)<br>• Rated Ultimate Short Circuit Breaking Capacity (O-t-CO)<br>• Dielectric Voltage Withstand<br>• 250% Calibration (Each Pole Separately) |
| Rated Short-time Withstand Current (Icw) (Sequence 4) | Circuit Breakers of Utilization Category B | • 200% Calibration (Each Pole Separately)<br>• Rated Short-Time Withstand Current<br>• Temperature Rise<br>• Short-Circuit Breaking Capacity at Maximum Short-Time Withstand Current (O-t-CO)<br>• Dielectric Voltage Withstand<br>• 200% Calibration (Each Pole Separately) |
| Combined Sequence | Circuit Breakers of Utilization Category B:<br>When Icw = Ics Replaces Sequences 2 and 4<br>When Icw = Ics = Icu Replaces Sequences 2, 3 and 4 | • 200% Calibration (Each Pole Separately)<br>• Rated Short-Time Withstand Current Icw<br>• Rated Service Short-Circuit Breaking Capacity at Ics (O-CO-CO) at Maximum Relay Temp.<br>• 145% Calibration (3 Poles in Series or 3-Phase Test)<br>• Dielectric Voltage Withstand<br>• Temperature Rise<br>• 200% Calibration (Each Pole Separately) |
| Individual Pole Short-Circuit Test Sequence (Annex H) | Circuit Breakers for Use in IT Systems | • Individual Pole Short-Circuit Breaking Capacity<br>• Dielectric Voltage Withstand<br>• 250% Calibration (Each Pole Separately) |


© 2007 Schneider Electric All Rights Reserved

## Continuous Current Rating

All circuit breakers marked as 100% rated can be continuously loaded to 100% of their rating.

Because of additional heat generated when applying circuit breakers at 100% of continuous current rating, the use of specially-designed enclosures and 90°C (194°F) wire is required. The 90°C (194°F) wire must be sized according the ampacity of the 75°C (167°F) wire column in the NEC. Minimum enclosure size and ventilation specifications are indicated on the circuit breaker and in it's instruction bulletin and in Section 1.

Circuit breakers with 100% rating can also be used in applications requiring only 80% continuous loading.

## Interrupting Ratings

**Table 42: Interrupting Ratings**

| Mounting | Circuit Breaker | Ampere Rating (A) | | Interrupting Ratings | | | | | | |
|---|---|---|---|---|---|---|---|---|---|---|
| | | Basic Electronic Trip Units | Micrologic® Trip Units | UL/CSA/NMX | | | IEC 60947-2 | | | |
| | | | | | | | 240 Vac | | 380/415 Vac | |
| | | | | 240 Vac | 480 Vac | 600 Vac | Icu | Ics | Icu | Ics |
| Individually-Mounted | PG | 600, 800, 1000, 1200 | 250, 400, 600, 800, 1000, 1200 | 65 kA | 35 kA | 18 KA | 50 kA | 25 kA | 35 kA | 20 kA |
| | PJ | | | 100 kA | 65 kA | 25 kA | 65 kA | 35 kA | 50 kA | 25 kA |
| | PK | | | 65 kA | 50 kA | 50 KA | 50 kA | 25 kA | 50 kA | 25 kA |
| | PL | | | 125 kA | 100 kA | — | 125 kA | 65 kA | 85 kA | 45kA |
| I-Line® | PG | 600, 700, 800, 900, 1000, 1200 | 250, 400, 600, 800, 1000, 1200 | 65 kA | 35 kA | 18 KA | 50 kA | 25 kA | 35 kA | 20 kA |
| | PJ | | | 100 kA | 65 kA | 25 kA | 65 kA | 35 kA | 50 kA | 25 kA |
| | PK | | | 65 kA | 50 kA | 50 KA | 50 kA | 25 kA | 50 kA | 25 kA |
| | PL | | | 125 kA | 100 kA | — | 125 kA | 65 kA | 85 kA | 45 kA |

## Automatic Molded Case Switches

Automatic molded case switches are available in individually-mounted and I-Line constructions from 600–1200 A. Automatic switches are similar in construction to electronic trip circuit breakers except that long-time tripping is not present. The switches open instantaneously at a non-adjustable magnetic trip point calibrated to protect only the molded case switch itself. They must be used in conjunction with a circuit breaker or fuse of equivalent rating.

**Table 43: Automatic Switch Information**

| Circuit Breaker | Ampere Rating | Voltage Rating | Catalog Number | Withstand Rating | | | Trip Point (±10%) |
|---|---|---|---|---|---|---|---|
| | | | | 240 Vac | 480 Vac | 600 Vac | |
| PJ 2P[1], 3P | 600 | 600 Vac | PJL36000S60 | 100 kA | 65 kA | 25 kA | 10 kA |
| | 800 | 600 Vac | PJL36000S80 | 100 kA | 65 kA | 25 kA | 10 kA |
| | 1000 | 600 Vac | PJL36000S10 | 100 kA | 65 kA | 25 kA | 10 kA |
| | 1200 | 600 Vac | PJL36000S12 | 100 kA | 65 kA | 25 kA | 10 kA |
| PL 2P, 3P | 600 | 480 Vac | PLL34000S60 | 125 kA | 100 kA | — | 10 kA |
| | 800 | 480 Vac | PLL34000S80 | 125 kA | 100 kA | — | 10 kA |
| | 1000 | 480 Vac | PLL34000S10 | 125 kA | 100 kA | — | 10 kA |
| | 1200 | 480 Vac | PLL34000S12 | 125 kA | 100 kA | — | 10 kA |
| PK 2P, 3P | 600 | 600 Vac | PKL36000S60 | 65 kA | 50 kA | 50 kA | 24 kA |
| | 800 | 600 Vac | PKL36000S80 | 65 kA | 50 kA | 50 kA | 24 kA |
| | 1000 | 600 Vac | PKL36000S10 | 65 kA | 50 kA | 50 kA | 24 kA |
| | 1200 | 600 Vac | PKL36000S12 | 65 kA | 50 kA | 50 kA | 24 kA |

[1] For 2P, replace the leading 3 in the catalog number following the prefix with a 2 (PJL36000S60 becomes PJL26000S60).


© 2007 Schneider Electric All Rights Reserved

THIS PAGE WAS INTENTIONALLY LEFT BLANK

# Micrologic trip units

The full range of PowerPact circuit breakers now feature Micrologic electronic trip units (energy model). Micrologic trip units are the intelligence behind a coordinated electrical distribution system that delivers improved operating efficiency and extended equipment life. All Micrologic trip units provide impeccable, electronic circuit protection with adjustable protection settings for maximum system coordination and flexibility. Sophisticated functionality, such as energy and power quality metering capabilities, is integrated in the more advanced trip units. Combined with quality PowerPact accessories, Micrologic trip units also enable circuit breakers to be networked and remotely controlled leading to substantial savings in electrical system operating costs. These interchangeable, microprocessor controlled devices provide the new generation of protection, measurement and control functions, delivering not only greater electrical system safety but also improved system integration and coordination.



**Micrologic P trip unit for PowerPact P and R**




**Micrologic H trip unit for PowerPact P and R**



**Micrologic E trip unit for PowerPact P and R**



**Standard Micrologic trip unit for PowerPact H, J, and L**



**Ammeter or Energy trip unit for Powerpact H, J and L**

# Simple: an easy installation and use

## Choose the model that meets your needs

The Micrologic trip unit family includes five models with varying levels of functionality. The simplest units provide basic overcurrent protection including long-time, instantaneous, and optional short-time adjustments for overloads and short circuits. Advanced units offer sophisticated functions such as ground fault protection and zone selective interlocking. They also incorporate a variety of communications options and energy metering capabilities – right inside the circuit breaker. With advanced trip units, use a network to communicate breaker information, gather power information and energy usage patterns, monitor events, and remotely control breakers for increased efficiency and savings. The breakers become part of an integrated, coordinated electrical system. For maximum flexibility in product selection, Micrologic trip units consist of five models with progressively increasing levels of functionality.

## Choose the right model for each application

| PowerPact H-, J- and L-Frame | Standard (S) | Ammeter (A) | Energy (E) | | |
|---|---|---|---|---|---|
| 15 – 600 A |  |  |  | | |
| **PowerPact P- and R-Frame** | **Standard (S)** | **Ammeter (A)** | **Energy (E)** | **Power (P)** | **Harmonic (H)** |
| up to 3000 A |  |  |  |  |  |

| Adj. protections<br>True RMS<br>Thermal imaging | Current meter<br>LED trip ind.<br>ZSI | Power and<br>energy meter | Frequency<br>Power factor | Total harmonic<br>distortion |
|---|---|---|---|---|

## Motor protection trip units

Also available are Micrologic trip units dedicated to managing motor applications at 600 A or below. Three levels of functionality are available with the motor trip unit offer.

- **1.3M:** Provides cable protection for short-circuits, and must be combined with an external thermal protection relay. This trip unit features an adjustable short-circuit protection threshold and fixed instantaneous protection.
- **2 M:** Provides thermal relay type protection in addition to short-circuit protection. Adjustable settings are included for the thermal protection threshold, the tripping class, and the short-circuit protection. Additional protections include phase unbalance and phase loss protection.
- **6 E-M:** Provides the same protection functions as the Micrologic 2-M units with the addition of ground fault, locked rotor protection, under-load protection and long start protection. They also incorporate energy metering and maintenance indicators similar to the Micrologic Energy trip unit.

## Mounting dimensions

Common mounting dimensions across the entire range means that the mounting pattern never has to change even when panel designs change.

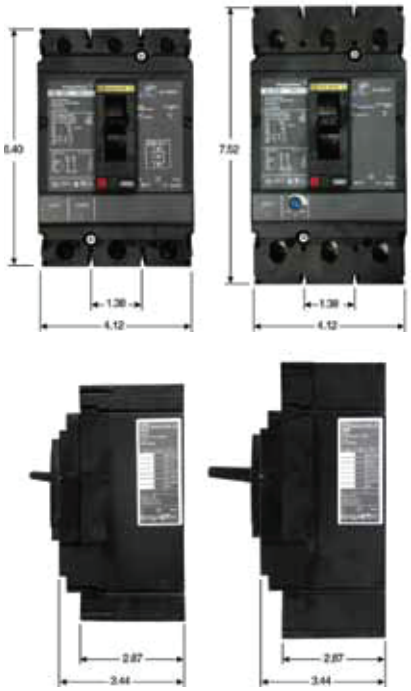


*H-Frame and a J-Frame PowerPact circut breaker.*

## Choice of terminal options

Terminal options include unique snap-in lugs that make converting between bus bar and lug options easy. If the application calls for lugs on the line side, load side or both, conversions are simple, making the PowerPact H- and J-Frame circuit breakers ideal for applications that require configuring products at the point of use.

The terminal nut or mechanical lug is set on a plastic retainer that slides and snaps into place. Making it possible to easily convert to a distrubution lug that provides multiple cable outputs for downstream components.



*Bus bar option*

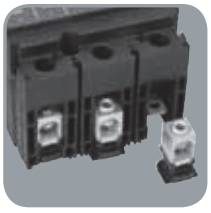

*Lug option*

## PowerPact H- and J-Frame with Micrologic circuit breakers – 15 A to 250 A

Well-suited to a wide range of applications, the Powerpact H- and J-Frame molded case circuit breakers feature a full complement of field installable accessories, field installable trip units, and improved interrupting ratings. These molded case circuit breakers deliver unmatched design flexibility and share identical mounting holes, handle locations, trim dimensions, and accessories, allowing customers to standardize equipment designs for 15 A to 250 A applications.

PowerPact H- and J-Frame circuit breakers come in many interruption ratings and are designed to limit let-through currents to provide better protection for downstream components. Interrupting ratings (AIR) include D-18 kA, G-35 kA, J-65 kA and L-100 kA at 480 Vac. Available as standard or 100% rated circuit breakers, the H-Frame ranges from 15 A to 150 A and the J-Frame from 70 A to 250 A.

Available trip units:

- **Thermal magnetic:** Circuit protection provided by individual thermal (overload) and magnetic (short circuit) sensing elements in each pole.
- **Standard electronic:** Adjustable overcurrent protection including long-time, instantaneous, and optional short-time.
- **Ammeter:** Adjustable long-time, short-time, instantaneous and optional ground fault protection is coupled with integrated current metering and maintenance indicators.
- **Energy:** Power and energy metering is integrated with exceptional long-time, short-time, instantaneous, and optional ground fault protections. Beyond energy metering, this trip unit delivers many advanced functions including power quality (harmonics) measurement.

## PowerPact L-Frame with Micrologic circuit breaker – 70 A to 600 A

Designed to accept common accessories and the full range of electronic trip options available for PowerPact H- and J-Frame, the newest addition to the PowerPact family of molded case circuit breakers delivers the same impeccable protection and flexibility. PowerPact L-Frame is also available as standard or 100% rated, and has a choice of many interruption ratings to support different application needs. Interrupting ratings (AIR) include D-18 kA, G-35 kA, J-65 kA and L-100 kA at 480 Vac.

Available trip units:

- **Standard electronic:** Adjustable overcurrent protection including long-time, instantaneous, and optional short-time.
- **Ammeter:** Adjustable long-time, short-time, instantaneous, and optional ground fault protection is coupled with integrated current metering and maintenance indicators.
- **Energy:** Power and energy metering is integrated with exceptional long-time, short-time, instantaneous, and optional ground fault protections. Beyond energy metering, this trip unit delivers many advanced functions including power quality (harmonics) measurement.

## PowerPact P- and R-Frame with Micrologic circuit breakers – 100 A to 3000 A

The compact P- and R-Frame circuit breakers permit smaller footprint and higher density installations. These circuit breakers are available in standard and 100% rated construction up to 3000 A to meet a broad range of commercial and industrial application needs. Common accessories make stocking and installation easy.

Built-in Modbus™ protocol provides an open communications platform and can be combined with a selection of four interchangeable Micrologic trip units.

- **Standard:** Adjustable overcurrent protection including long-time, instantaneous, and optional short-time.
- **Ammeter:** Adjustable long-time, short-time, instantaneous, and optional ground fault protection is coupled with integrated current metering and an optional Modbus communication interface.
- **Power:** Combines power monitoring and metering functions, with long-time, short-time, instantaneous/optional ground fault adjustments, and advanced relay functions, and has a standard Modbus communication interface.
- **Harmonics:** All of the functionality of the Power trip unit, plus enhanced monitoring and metering capabilities, basic power quality (harmonics) measurement, and waveform capture.



*PowerPact L-Frame with Micrologic*



*PowerPact P-Frame with Micrologic*



*PowerPact R-Frame with Micrologic*

THIS DOCUMENT HAS BEEN REDACTED FROM A LARGER DOCUMENT (DOC# 0600BR1101 PUBLISHED SEPTEMBER 2011)

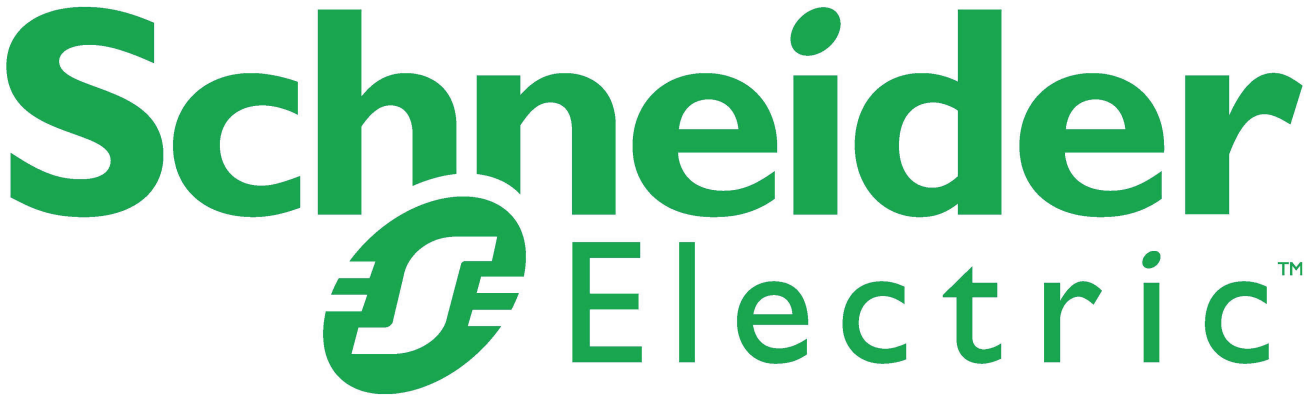


# PANELBOARDS

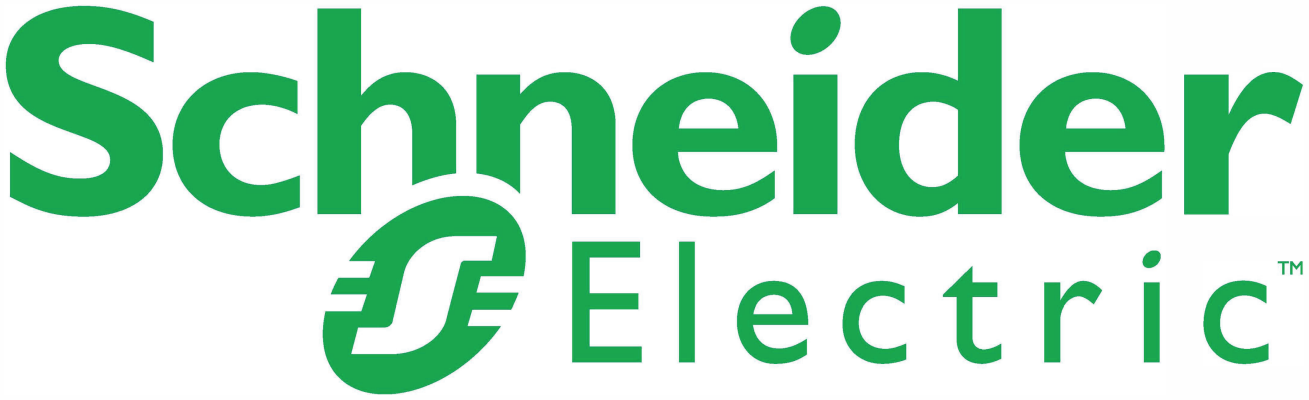


# BILL OF MATERIALS AND DRAWINGS

| | | |
|---|---|---|
| **Q2C Number:** 41753775 | **Quote Number:** 2 | **Revision Number:** 1 |
| **Project Name:** IQALUIT WASTE WATER TREATMENT UPGR | | **Quote Name:** |

| Item No. | Qty. | Catalog Number / Details |
|---|---|---|

# PANELBOARDS

002-00 1

**Designation:** CDP-1
NQ ML PNLB (INT,BOX,FRT)
NQ Panelboard
Consisting of
208Y/120V 3Ph 4W 60Hz SCCR: 22kA
Fully Rated
SPD 120kA per Phase/60kA per Mode
SPD line to grd protect
w/SPD Surge Counter
w/SPD Dry Contacts
Main Lug Only: 400A
Incoming Conductors: 1 - 1/0 - 750, (2) 1/0 - 350 kcmil
Bus: Copper: Silver/Tin Plated
CU Ground Bar
30 Circuit Interior
Type 2 (Driphood)Box: 50H x 20W x 5.75D
Incoming: Bottom Trim: Surface with Door
Box Cat No: MH50H Front Cat No: NC50VS
Ref. Drawing: PBA709A
Feeders:
4 - 100A/3P QOB-VH
1 - 30A/3P QOB-VH SPD DISC
1 - 15A/3P QOB-VH HPL
Optional Features:
Ship Completely Assembled,Copper Solid Neutral,Drip Hood,Seismic Qualification - IBC/ASCE7/CBC/NBCC,SPD Model BIA,Copper Ground Bar

003-00 1

**Designation:** 2A
NQ ML PNLB (INT,BOX,FRT)
NQ Panelboard
Consisting of
208Y/120V 3Ph 4W 60Hz SCCR: 10kA
Fully Rated
Main Lug Only: 225A
Incoming Conductors: 1 - #6 - 350 kcmil
Bus: Copper: Silver/Tin Plated
CU Ground Bar
72 Circuit Interior
Type 2 (Driphood)Box: 44H x 20W x 5.75D
Incoming: Bottom Trim: Surface with Door
Box Cat No: MH44H Front Cat No: NC44S
Ref. Drawing: PBA701A
Feeders:
6 - 15A/3P QOB-VH
1 - 15A/2P QOB
23 - 15A/1P QOB-VH
17 - 15A/1P QOB Prepared Space
Optional Features:
Ship Completely Assembled,Copper Solid Neutral,Drip Hood,Seismic Qualification - IBC/ASCE7/CBC/NBCC,Copper Ground Bar

**Q2C Number:** 41753775 **Quote Number:** 2 **Revision Number:** 1

**Project Name:** IQALUIT WASTE WATER TREATMENT UPGR **Quote Name:**

| Item No. | Qty. | Catalog Number / Details |
|---|---|---|
| 004-00 | 1 | **Designation:** 2C<br>NQ ML PNLB (INT,BOX,FRT)<br>NQ Panelboard<br>Consisting of<br>208Y/120V 3Ph 4W 60Hz SCCR: 10kA<br>Fully Rated<br>Main Lug Only: 100A<br>Incoming Conductors: 1 - #6 - 2/0 AWG<br>Bus: Copper: Silver/Tin Plated<br>CU Ground Bar<br>42 Circuit Interior<br>Type 2 (Driphood)Box: 38H x 20W x 5.75D<br>Incoming: Bottom Trim: Surface with Door<br>Box Cat No: MH38H Front Cat No: NC38S<br>Ref. Drawing: PBA701A<br>Feeders:<br>1 - 25A/2P QOB<br>2 - 15A/2P QOB<br>25 - 15A/1P QOB<br>11 - 15A/1P QOB Prepared Space<br>Optional Features:<br>Ship Completely Assembled,Copper Solid Neutral,Drip Hood,Seismic Qualification - IBC/ASCE7/CBC/NBCC,Copper Ground Bar |

| REV | DESCRIPTION | BY | DATE | | | | |
|---|---|---|---|---|---|---|---|
| — | ———— | —— | ——/—— | — | ———— | —— | ——/—— |

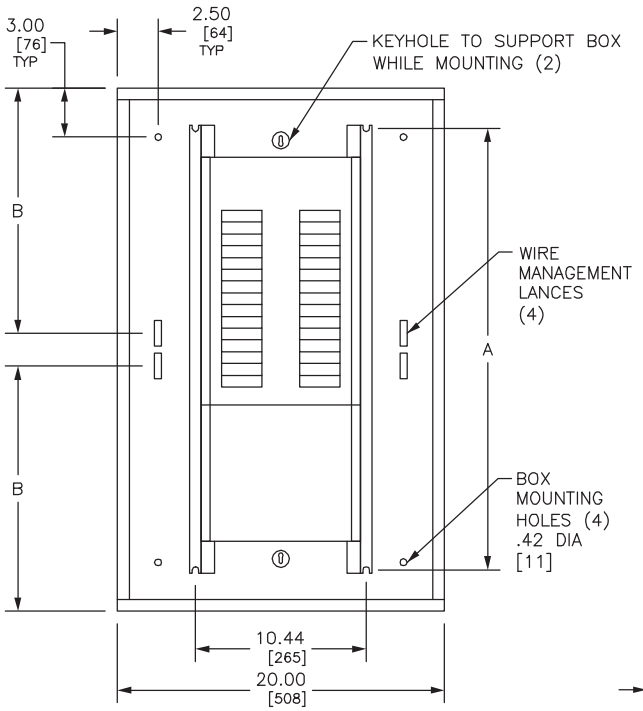


TYPICAL BOX WITH INTERIOR

TYPICAL BOX SIDE VIEW

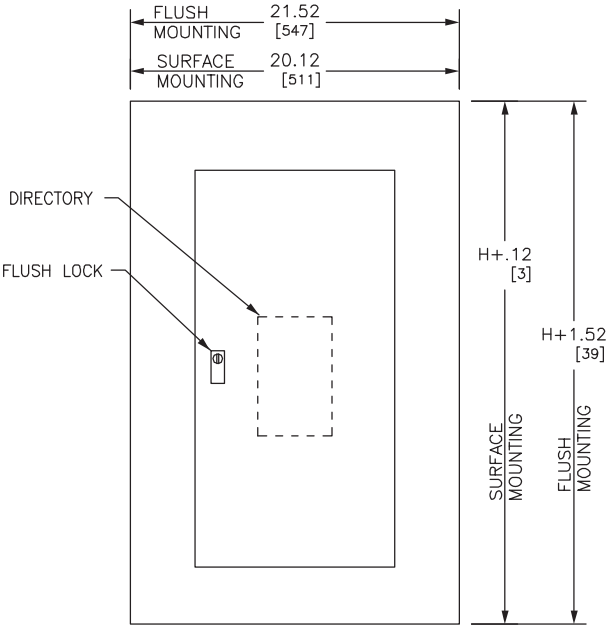


TYPICAL FRONT

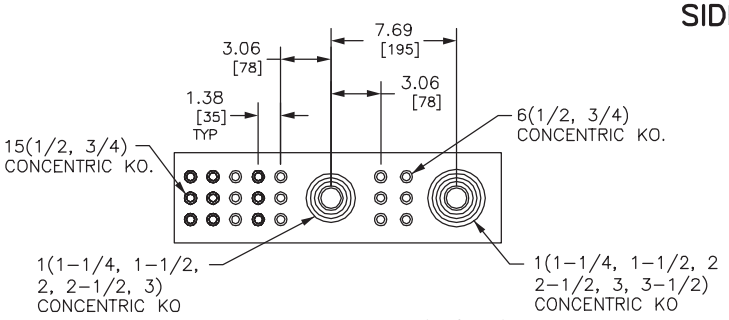


**ENDWALL WITH KNOCKOUTS**
(OTHER ENDWALL IS BLANK)

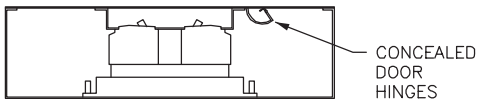


TYPICAL MOUNTING OF QO, QOB BREAKERS

DUAL DIMENSIONS: INCHES / MILLIMETERS

| MAXIMUM MAIN LUGS AMPERE RATING | MAXIMUM NUMBER OF CIRCUITS | H | | A | | B | |
|---|---|---|---|---|---|---|---|
| | | IN | MM | IN | MM | IN | MM |
| 100A | 18 | 26.00 | 660 | 21.00 | 533 | 11.00 | 279 |
| | 30 | 32.00 | 813 | 27.00 | 686 | 15.00 | 381 |
| 225A | 30 | 32.00 | 813 | 27.00 | 686 | 15.00 | 381 |
| | 42 & 54 | 38.00 | 965 | 33.00 | 838 | 15.00 | 381 |
| | 72 | 44.00 | 1118 | 39.00 | 991 | 15.00 | 381 |
| | 84 | 50.00 | 1270 | 45.00 | 1143 | 15.00 | 381 |
| 100A WITH SUB FEED LUGS OR FEED THRU LUGS | 18 | 26.00 | 660 | 21.00 | 533 | 15.00 | 381 |
| | 30 | 32.00 | 813 | 27.00 | 686 | 15.00 | 381 |
| 225A WITH SUB FEED LUGS | 30 | 38.00 | 965 | 33.00 | 838 | 15.00 | 381 |
| | 42 & 54 | 44.00 | 1118 | 39.00 | 991 | 15.00 | 381 |
| | 72 | 50.00 | 1270 | 45.00 | 1143 | 15.00 | 381 |
| | 84 | 56.00 | 1422 | 51.00 | 1295 | 15.00 | 381 |
| 225A WITH FEED THRU LUGS | 30 & 42 | 38.00 | 965 | 33.00 | 838 | 15.00 | 381 |
| | 54 | 44.00 | 1118 | 39.00 | 991 | 15.00 | 381 |
| | 72 | 50.00 | 1270 | 45.00 | 1143 | 15.00 | 381 |
| | 84 | 56.00 | 1422 | 51.00 | 1295 | 15.00 | 381 |
| 225A WITH SUB FEED BREAKER | 30 | 50.00 | 1270 | 45.00 | 1143 | 15.00 | 381 |
| | 42 & 54 | 56.00 | 1422 | 51.00 | 1295 | 15.00 | 381 |
| | 72 | 62.00 | 1575 | 57.00 | 1448 | 15.00 | 381 |
| | 84 | 68.00 | 1727 | 63.00 | 1600 | 15.00 | 381 |

REFER TO DP CATALOG CLASS 1640 FOR ADDITIONAL INFORMATION

FOR TYPE 3R APPLICATIONS USE IN CONJUNCTION WITH PBA711

NQ PANELBOARDS MEET THE APPLICABLE REQUIREMENTS OF UL AND CSA.

BOX: CODE GAUGE GALVANIZED STEEL. ONE ENDWALL IS BLANK, THE OTHER HAS KNOCKOUTS.

FRONT: MONO-FLAT CONSTRUCTION WITH CONCEALED TRIM SCREWS AND DOOR HINGES. ANSI 49 GRAY BAKED ENAMEL FINISH ELECTRODEPOSITED OVER CLEANED PHOSPHATIZED STEEL.

LOCK: FLUSH LOCK WITH BRUSHED STAINLESS STEEL ESCUTCHEON. NSR-251 KEY.

| | | | |
|---|---|---|---|
| JOB NAME: | ——— | EQUIPMENT DESIGNATION: | ——— |
| JOB LOCATION: | ——— | EQUIPMENT TYPE: | NQ MLO 100A/225A TYPE 1 |
| DRAWN BY: | ——— | DRAWING TYPE: | ——— |
| ENGR: | ——— | | |
| DATE: | AUGUST 2007 | | |
| DRAWING STATUS: | ——— | DWG# PBA701A | PG 01 OF 01 REV — |

SQUARE D
Schneider Electric

| REV | DESCRIPTION | BY | DATE | — | ———— | —— | ——/—— |
|---|---|---|---|---|---|---|---|
| — | ———— | —— | ——/—— | — | ———— | —— | ——/—— |

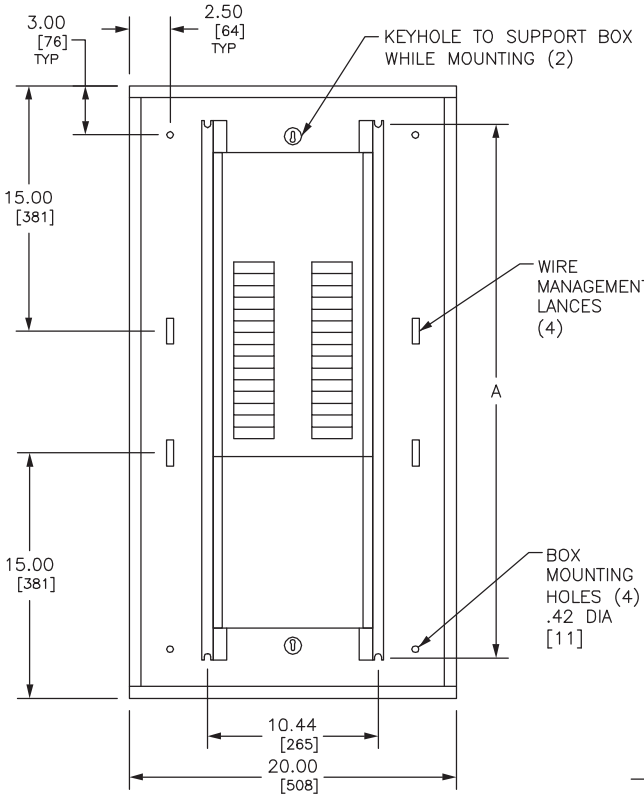


TYPICAL BOX WITH INTERIOR

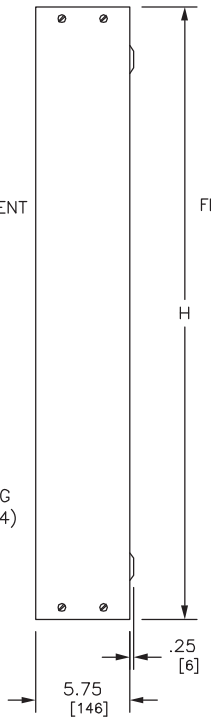


TYPICAL BOX
SIDE VIEW

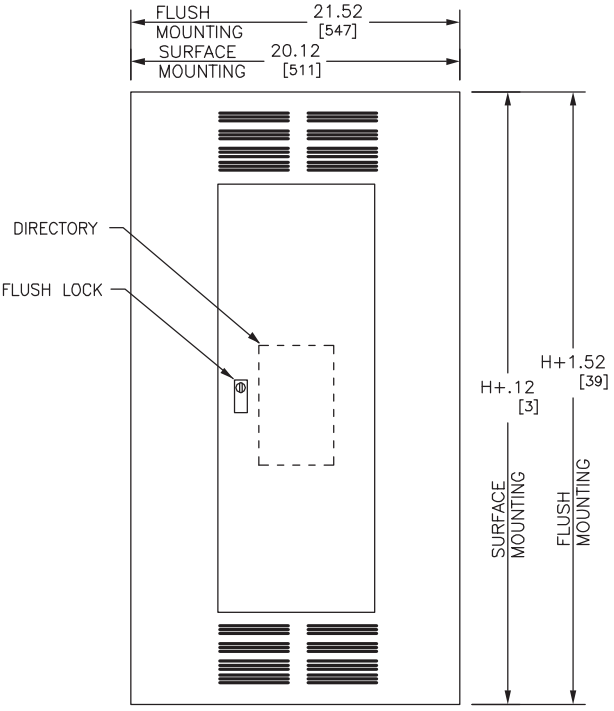


TYPICAL FRONT

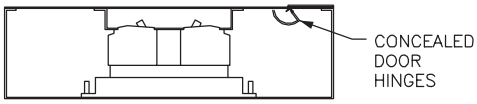


TYPICAL MOUNTING OF
QO, QOB BREAKERS

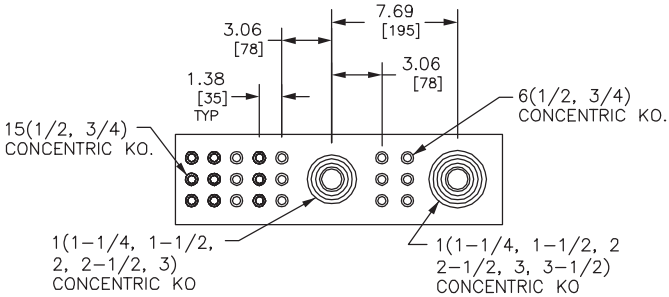


**ENDWALL WITH KNOCKOUTS**
(OTHER ENDWALL IS BLANK)

DUAL DIMENSIONS: INCHES / MILLIMETERS

| MAXIMUM MAIN LUGS AMPERE RATING | MAXIMUM NUMBER OF CIRCUITS | H | | A | |
|---|---|---|---|---|---|
| | | IN | MM | IN | MM |
| 400A | 30 & 42 | 50.00 | 1270 | 45.00 | 1143 |
| | 54 | 56.00 | 1422 | 51.00 | 1295 |
| | 72 | 62.00 | 1575 | 57.00 | 1448 |
| | 84 | 68.00 | 1727 | 63.00 | 1600 |
| 400A WITH SUB FEED LUGS | 30 & 42 | 50.00 | 1270 | 45.00 | 1143 |
| | 54 | 56.00 | 1422 | 51.00 | 1295 |
| | 72 | 62.00 | 1575 | 57.00 | 1448 |
| | 84 | 68.00 | 1727 | 63.00 | 1600 |
| 400A WITH FEED THRU LUGS | 30 & 42 | 56.00 | 1422 | 51.00 | 1295 |
| | 54 | 62.00 | 1575 | 57.00 | 1448 |
| | 72 | 68.00 | 1727 | 63.00 | 1600 |
| | 84 | 74.00 | 1880 | 69.00 | 1753 |
| 400A WITH SUB FEED BREAKERS | 30 & 42 | 74.00 | 1880 | 69.00 | 1753 |
| | 54 | 80.00 | 2032 | 75.00 | 1905 |
| | 72 | 86.00 | 2184 | 81.00 | 2057 |
| 600A * | 30 & 42 | 50.00 | 1270 | 45.00 | 1143 |
| | 54 | 56.00 | 1422 | 51.00 | 1295 |
| | 72 | 62.00 | 1575 | 57.00 | 1448 |
| | 84 | 68.00 | 1727 | 63.00 | 1600 |
| 600A WITH FEED THRU LUGS | 30 & 42 | 62.00 | 1575 | 57.00 | 1448 |
| | 54 | 68.00 | 1727 | 63.00 | 1600 |
| | 72 | 74.00 | 1880 | 69.00 | 1753 |
| | 84 | 80.00 | 2032 | 75.00 | 1905 |
| 600A WITH SUB FEED BREAKERS | 30 & 42 | 74.00 | 1880 | 69.00 | 1753 |
| | 54 | 80.00 | 2032 | 75.00 | 1905 |
| | 72 | 86.00 | 2184 | 81.00 | 2057 |

* FOR TYPE 3R ENCLOSURE INCREASE HEIGHT DIMENSION BY 12.00/[305]

REFER TO DP CATALOG CLASS 1640 FOR ADDITIONAL INFORMATION

FOR TYPE 3R APPLICATIONS USE IN CONJUNCTION WITH PBA711

NQ PANELBOARDS MEET THE APPLICABLE REQUIREMENTS OF UL AND CSA.

BOX: CODE GAUGE GALVANIZED STEEL. ONE ENDWALL IS BLANK, THE OTHER HAS KNOCKOUTS.

FRONT: GRAY BAKED ENAMEL FINISH ELECTRODEPOSITED OVER CLEANED PHOSPHATIZED STEEL. FRONT IS VENTED AND MOUNTS TO ENCLOSURE WITH SCREWS. DOOR HINGES ARE CONCEALED.

LOCK: FLUSH LOCK WITH BRUSHED STAINLESS STEEL ESCUTCHEON. NSR–251 KEY.

| | | | |
|---|---|---|---|
| JOB NAME: | ——— | EQUIPMENT DESIGNATION: | ——— |
| JOB LOCATION: | ——— | EQUIPMENT TYPE: | NQ MLO 400A/600A TYPE 1 |
| DRAWN BY: | ——— | DRAWING TYPE: | ——— |
| ENGR: | ——— | | |
| DATE: | AUGUST 2007 | | |
| DRAWING STATUS: | ——— | DWG# PBA709A | PG 01 OF 01 REV — |

SQUARE D
Schneider Electric

| REV | DESCRIPTION | BY | DATE | – | ---- | -- | --/--/-- |
|---|---|---|---|---|---|---|---|
| – | ---- | -- | --/--/-- | – | ---- | -- | --/--/-- |

| CKT NO | ACCESSORIES | TYPE | RATING AMP/P |
|---|---|---|---|
| 1 | | | |
| 3 | | QOB–VH | 100/3 |
| 5 | | | |
| 7 | | | |
| 9 | | QOB–VH | 100/3 |
| 11 | | | |
| 13 | | | |
| 15 | DISCONNECTS POWER TO SPD,SPD DISCONNECT | QOB–VH | 30/3 |
| 17 | | | |
| | Surge Counter Dry Contacts | SPD 120kA/3 | |

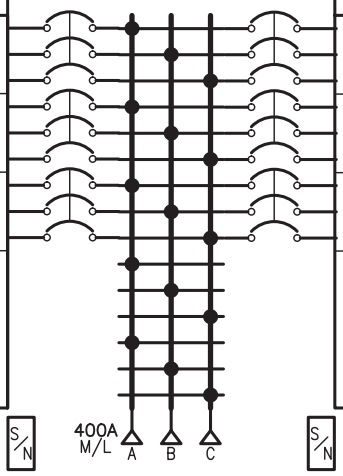


| RATING AMP/P | TYPE | ACCESSORIES | CKT NO |
|---|---|---|---|
| | | | 2 |
| 100/3 | QOB–VH | | 4 |
| | | | 6 |
| | | | 8 |
| 100/3 | QOB–VH | | 10 |
| | | | 12 |
| | | | 14 |
| 15/3 | QOB–VH | HLO Fixed Off/On | 16 |
| | | | 18 |
| | SPD 120kA/3 | Surge Counter Dry Contacts | |

## PHYSICAL DATA

ENCLOSURE Type 2
Surface with Door
FRONT CAT#: NC50VS
BOX CAT#: MH50H

DIMENSIONS:
50''(1270mm)Hx20"(508mm)Wx5.75''(146mm)D
PBA: 709A

BUSSING: COPPER
Silver/Tin Plated

OPTIONAL FEATURES:
SEISMICALLY QUALIFIED : IBC/ASCE7/CBC/NBCC
SHIP COMPLETELY ASSEMBLED
DRIP HOOD
Copper GROUND BAR
COPPER SOLID NEUTRAL
Maximum Panel Weight 125.
Depth Center of Gravity 5.75
Elevation Center of Gravity 25.0
Vertical Center of Gravity 10.0
SPD DRY CONTACTS
SPD SURGE COUNTER
SPD PEAK SURGE RATING/PHASE: 120kA
SPD LINE TO GRD PROTECT

## ELECTRICAL DATA

SYSTEM: 208Y/120V 3Ph 4W 60Hz
System Ampacity: 400A
22kA SYMS. SCCR

MAIN: MAIN LUGS : 400A
Bottom FEED
INCOMING CONDUCTORS(S) PER NEC, CEC, NOM:
Wire Bending Space:
Phase Lugs:1 – 1/0 – 750, (2) 1/0 – 350 kcmil

----------BRANCH SUMMATION----------

4 – 100A/3P QOB–VH
1 – 30A/3P QOB–VH SPD DISC
1 – 15A/3P QOB–VH HPL

| | | | |
|---|---|---|---|
| JOB NAME: | IQALUIT WASTE WATER TREATMENT UPGR | EQUIPMENT DESIGNATION: | CDP–1 |
| JOB LOCATION: | 806 | EQUIPMENT TYPE: | NQ (Circuit Breaker Type) PANEL 1 OF 1 |
| DRAWN BY: | (Q2C) | DRAWING TYPE: | ONE LINE DIAGRAM |
| ENGR: | | | SQUARE D by Schneider Electric |
| DATE: | May 09 2019 | | |
| DRAWING STATUS: | QUOTE | DWG# 041753775–01 | PG 1 OF 1 REV – |

| REV | DESCRIPTION | BY | DATE | – | ---- | -- | --/--/-- |
|---|---|---|---|---|---|---|---|
| – | ---- | -- | --/--/-- | – | ---- | -- | --/--/-- |

| CKT NO | ACCESSORIES | TYPE | RATING AMP/P |
|---|---|---|---|
| 1 | | QOB–VH | 15/3 |
| 3 | | | |
| 5 | | | |
| 7 | | QOB–VH | 15/3 |
| 9 | | | |
| 11 | | | |
| 13 | | QOB–VH | 15/3 |
| 15 | | | |
| 17 | | | |
| 19 | | QOB | 15/2 |
| 21 | | | |
| 23 | | QOB–VH | 15/1 |
| 25 | | QOB–VH | 15/1 |
| 27 | | QOB–VH | 15/1 |
| 29 | | QOB–VH | 15/1 |
| 31 | | QOB–VH | 15/1 |
| 33 | | QOB–VH | 15/1 |
| 35 | | QOB–VH | 15/1 |
| 37 | | QOB–VH | 15/1 |
| 39 | | QOB–VH | 15/1 |
| 41 | | QOB–VH | 15/1 |
| 43 | | QOB–VH | 15/1 |
| 45 | PREPARED SPACE | QOB | 15/1 |
| 47 | PREPARED SPACE | QOB | 15/1 |
| 49 | PREPARED SPACE | QOB | 15/1 |
| 51 | PREPARED SPACE | QOB | 15/1 |
| 53 | PREPARED SPACE | QOB | 15/1 |
| 55 | PREPARED SPACE | QOB | 15/1 |
| 57 | PREPARED SPACE | QOB | 15/1 |
| 59 | PREPARED SPACE | QOB | 15/1 |
| 61 | | | |
| 63 | | | |
| 65 | | | |
| 67 | | | |
| 69 | | | |
| 71 | BLANK | | |

| RATING AMP/P | TYPE | ACCESSORIES | CKT NO |
|---|---|---|---|
| | | | 2 |
| 15/3 | QOB–VH | | 4 |
| | | | 6 |
| | | | 8 |
| 15/3 | QOB–VH | | 10 |
| | | | 12 |
| | | | 14 |
| 15/3 | QOB–VH | | 16 |
| | | | 18 |
| 15/1 | QOB–VH | | 20 |
| 15/1 | QOB–VH | | 22 |
| 15/1 | QOB–VH | | 24 |
| 15/1 | QOB–VH | | 26 |
| 15/1 | QOB–VH | | 28 |
| 15/1 | QOB–VH | | 30 |
| 15/1 | QOB–VH | | 32 |
| 15/1 | QOB–VH | | 34 |
| 15/1 | QOB–VH | | 36 |
| 15/1 | QOB–VH | | 38 |
| 15/1 | QOB–VH | | 40 |
| 15/1 | QOB–VH | | 42 |
| 15/1 | QOB | PREPARED SPACE | 44 |
| 15/1 | QOB | PREPARED SPACE | 46 |
| 15/1 | QOB | PREPARED SPACE | 48 |
| 15/1 | QOB | PREPARED SPACE | 50 |
| 15/1 | QOB | PREPARED SPACE | 52 |
| 15/1 | QOB | PREPARED SPACE | 54 |
| 15/1 | QOB | PREPARED SPACE | 56 |
| 15/1 | QOB | PREPARED SPACE | 58 |
| 15/1 | QOB | PREPARED SPACE | 60 |
| | | | 62 |
| | | | 64 |
| | | | 66 |
| | | | 68 |
| | | | 70 |
| | | BLANK | 72 |

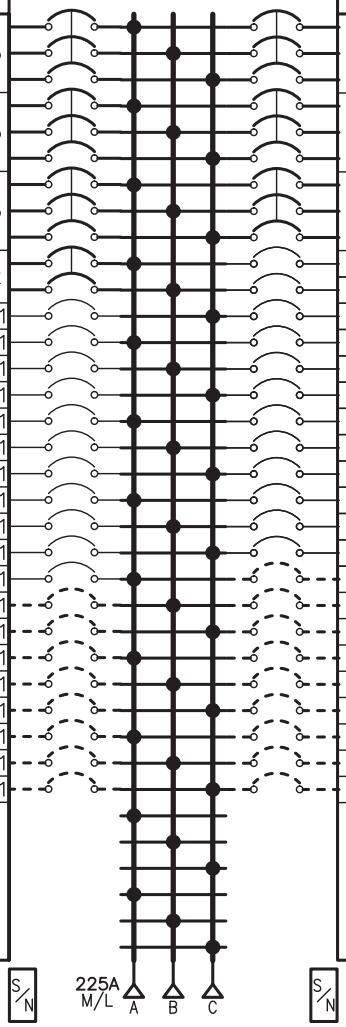


## PHYSICAL DATA

ENCLOSURE Type 2
Surface with Door
FRONT CAT#: NC44S
BOX CAT#: MH44H

DIMENSIONS:
44''(1118mm)Hx20"(508mm)Wx5.75''(146mm)D
PBA: 701A

BUSSING: COPPER
Silver/Tin Plated

OPTIONAL FEATURES:
SEISMICALLY QUALIFIED : IBC/ASCE7/CBC/NBCC
SHIP COMPLETELY ASSEMBLED
DRIP HOOD
Copper GROUND BAR
COPPER SOLID NEUTRAL
Maximum Panel Weight 110.
Depth Center of Gravity 5.75

(Continued on next page.)

## ELECTRICAL DATA

SYSTEM: 208Y/120V 3Ph 4W 60Hz
System Ampacity: 225A
10kA SYMS. SCCR

MAIN: MAIN LUGS : 225A
Bottom FEED
INCOMING CONDUCTORS(S) PER NEC, CEC, NOM:
Wire Bending Space:
Phase Lugs:1 – #6 – 350 kcmil

----------BRANCH SUMMATION----------

| | |
|---|---|
| 6 – 15A/3P QOB–VH | 1 – 15A/2P QOB |
| 23 – 15A/1P QOB–VH | 17 – 15A/1P–PS QOB |

| | | | |
|---|---|---|---|
| JOB NAME: | IQALUIT WASTE WATER TREATMENT UPGR | EQUIPMENT DESIGNATION: | 2A |
| JOB LOCATION: | 806 | EQUIPMENT TYPE: | NQ (Circuit Breaker Type) PANEL 1 OF 1 |
| DRAWN BY: | (Q2C) | DRAWING TYPE: | ONE LINE DIAGRAM |
| ENGR: | | | SQUARE D by Schneider Electric |
| DATE: | May 09 2019 | | |
| DRAWING STATUS: | QUOTE | DWG# 041753775–01 | PG 1 OF 2 REV – |

| REV | DESCRIPTION | BY | DATE | – | ---- | -- | --/--/-- |
|---|---|---|---|---|---|---|---|
| – | ---- | -- | --/--/-- | – | ---- | -- | --/--/-- |

## PHYSICAL DATA CONTINUED

Elevation Center of Gravity 22.0

Vertical Center of Gravity 10.0

| | | | |
|---|---|---|---|
| JOB NAME: | IQALUIT WASTE WATER TREATMENT UPGR | EQUIPMENT DESIGNATION: | 2A |
| JOB LOCATION: | 806 | EQUIPMENT TYPE: | NQ (Circuit Breaker Type) PANEL 1 OF 1 |
| DRAWN BY: | (Q2C) | DRAWING TYPE: | ONE LINE DIAGRAM |
| ENGR: | | | SQUARE D by Schneider Electric |
| DATE: | May 09 2019 | | |
| DRAWING STATUS: | QUOTE | DWG# 041753775-01 | PG 2 OF 2 REV – |

| REV | DESCRIPTION | BY | DATE | – | ---- | -- | --/--/-- |
|---|---|---|---|---|---|---|---|
| – | ---- | -- | --/--/-- | – | ---- | -- | --/--/-- |

| CKT NO | ACCESSORIES | TYPE | RATING AMP/P |
|---|---|---|---|
| 1 | | QOB | 25/2 |
| 3 | | | |
| 5 | | QOB | 15/2 |
| 7 | | | |
| 9 | | QOB | 15/1 |
| 11 | | QOB | 15/1 |
| 13 | | QOB | 15/1 |
| 15 | | QOB | 15/1 |
| 17 | | QOB | 15/1 |
| 19 | | QOB | 15/1 |
| 21 | | QOB | 15/1 |
| 23 | | QOB | 15/1 |
| 25 | | QOB | 15/1 |
| 27 | | QOB | 15/1 |
| 29 | | QOB | 15/1 |
| 31 | | QOB | 15/1 |
| 33 | PREPARED SPACE | QOB | 15/1 |
| 35 | PREPARED SPACE | QOB | 15/1 |
| 37 | PREPARED SPACE | QOB | 15/1 |
| 39 | PREPARED SPACE | QOB | 15/1 |
| 41 | PREPARED SPACE | QOB | 15/1 |

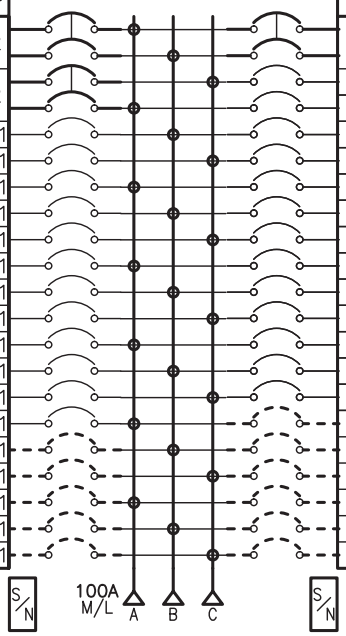


| RATING AMP/P | TYPE | ACCESSORIES | CKT NO |
|---|---|---|---|
| 15/2 | QOB | | 2 |
| | | | 4 |
| 15/1 | QOB | | 6 |
| 15/1 | QOB | | 8 |
| 15/1 | QOB | | 10 |
| 15/1 | QOB | | 12 |
| 15/1 | QOB | | 14 |
| 15/1 | QOB | | 16 |
| 15/1 | QOB | | 18 |
| 15/1 | QOB | | 20 |
| 15/1 | QOB | | 22 |
| 15/1 | QOB | | 24 |
| 15/1 | QOB | | 26 |
| 15/1 | QOB | | 28 |
| 15/1 | QOB | | 30 |
| 15/1 | QOB | PREPARED SPACE | 32 |
| 15/1 | QOB | PREPARED SPACE | 34 |
| 15/1 | QOB | PREPARED SPACE | 36 |
| 15/1 | QOB | PREPARED SPACE | 38 |
| 15/1 | QOB | PREPARED SPACE | 40 |
| 15/1 | QOB | PREPARED SPACE | 42 |

## PHYSICAL DATA

ENCLOSURE Type 2
Surface with Door
FRONT CAT#: NC38S
BOX CAT#: MH38H

DIMENSIONS:
38''(965mm)Hx20"(508mm)Wx5.75''(146mm)D
PBA: 701A

BUSSING: COPPER
Silver/Tin Plated

OPTIONAL FEATURES:
SEISMICALLY QUALIFIED : IBC/ASCE7/CBC/NBCC
SHIP COMPLETELY ASSEMBLED
DRIP HOOD
Copper GROUND BAR
COPPER SOLID NEUTRAL
Maximum Panel Weight 95.0
Depth Center of Gravity 5.75
Elevation Center of Gravity 19.0
Vertical Center of Gravity 10.0

## ELECTRICAL DATA

SYSTEM: 208Y/120V 3Ph 4W 60Hz
System Ampacity: 100A
10kA SYMS. SCCR

MAIN: MAIN LUGS : 100A
Bottom FEED
INCOMING CONDUCTORS(S) PER NEC, CEC, NOM:
Wire Bending Space:
Phase Lugs:1 – #6 – 2/0 AWG

----------BRANCH SUMMATION----------

| | |
|---|---|
| 1 – 25A/2P QOB | 2 – 15A/2P QOB |
| 25 – 15A/1P QOB | 11 – 15A/1P–PS QOB |

| | | | |
|---|---|---|---|
| JOB NAME: | IQALUIT WASTE WATER TREATMENT UPGR | EQUIPMENT DESIGNATION: | 2C |
| JOB LOCATION: | 806 | EQUIPMENT TYPE: | NQ (Circuit Breaker Type) PANEL 1 OF 1 |
| DRAWN BY: | (Q2C) | DRAWING TYPE: | ONE LINE DIAGRAM |
| ENGR: | | | SQUARE D by Schneider Electric |
| DATE: | May 09 2019 | | |
| DRAWING STATUS: | QUOTE | DWG# 041753775–01 | PG 1 OF 1 REV – |

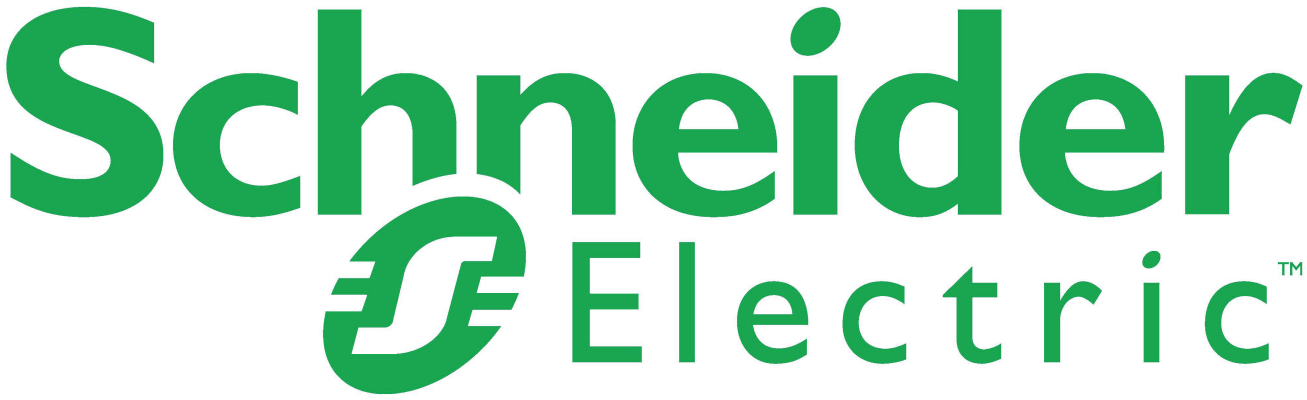


# LITERATURE

# NQ Lighting Panelboards



***Developed with electrical contractor input, the NQ family of lighting and appliance panelboards sets new standards for ease of installation and durability. Plus, new design innovations increase the availablity of these panelboards by offering complete ready to install products.***

## Features

- 240Vac, 48Vdc maximum
- 600A maximum main circuit breakers or main lugs
- 150A maximum branch circuit breakers
- 10,000A through 200,000A SCCR
- Both fully rated and series rated systems are available
- Interiors are field convertible to top or bottom feed
- Interiors are available in plated copper or aluminum bus
- Interiors accept both bolt-on and plug-on branch circuit breakers
- Complete line of UL/cUL listed interiors with 200% rated neutrals for non-linear loads
- Suitable for use as service entrance equipment
- 20" wide trims and boxes common for NQ and NF panelboards
- Mono-flat® or hinged trims

## Factory Options

- 1P3W or 3P4W – 600A main lugs and main breaker panelboards
- Sub-feed and thru-feed lugs
- Sub-feed circuit breakers
- Optional 200% rated neutrals up to 400A
- Split bus bars
- TVSS
  - 100,000A – 240,000A surge current rating
  - All voltage systems
- Lighting contactors
- Customer equipment space

## "Ready-to-Install" Panels and Kits Available from Stock

- 100A – 600A MLO 1P3W and 3P4W Interiors
- NEMA 1 and 3R/12 enclosures
- 100A – 400A main circuit breaker kits
- TVSS interiors
  - 120,000A or 160,000A surge current ratings
- 100A – 400A sub-feed and thru-feed lugs
- Sub-feed circuit breaker kits
  - 1 – 225A sub-feed circuit breaker per 225A panelboard
  - 2 – 225A sub-feed circuit breakers per 400A panelboard
- 200% neutral kits up to 400A
- Copper neutrals and equipment ground bars



THIS PAGE WAS INTENTIONALLY LEFT BLANK

# NQ SurgeLoc SPD

## Square D Internally Mounted Surge Protective Devices

Square D™ brand Surgelogic™ internal SurgeLoc Surge Protective Device (SPD) delivers specification grade performance for service entrance or critical branch panel applications.  This multi-phase system provides suppression for all critical modes inside electrical equipment and shorter lead lengths for superior SPD performance.



SQUARE D™

by Schneider Electric

# NQ SurgeLoc SPD Features



Internal NQ panel Surge Protective Devices (SPDs) provide superior design and service life for a wide variety of commercial, industrial, or institutional applications. Square D brand Surgelogic SPDs offer first-rate surge suppression performance for demanding service entrance applications or as part of a suppression network. The robust construction reduces potential down time and maintenance costs due to voltage surges.

## Superior Performance

The SurgeLoc SPD product utilizes a high-energy suppression circuit that provides 6-10 modes of suppression from 80,000 to 240,000 peak Amps of surge current rating per phase. These devices feature circuity that provides not only transient surge suppression, but also noise filtration.

## Ordering/Installation

SurgeLoc can be ordered from your local Schneider Electric distributor as a merchandised product or factory installed as part of a complete panelboard assembly. Factory orders come professionally assembled and pre-wired into the electrical panel insuring minimum lead lengths and high performance. All factory installed units are tested before delivery to their final destination, maintaining Square D brand's high standard of quality and customer satisfaction.

## Warranty

SurgeLoc internal SPDs have a 10-year warranty.

| FEATURES | ADVANTAGES | BENEFITS |
|---|---|---|
| Integral to electrical gear and panels | SPDs are professionally installed inside electrical gear and panels | Delivers high levels of SPD performance and saves on enclosure and installation expenses |
| 80,000 to 240,000 Amp Capacity (depending on model) | Longer service life and suppression against high-energy lightning strikes | High performance surge suppression even in severe electrical conditions |
| EMI/RFI Noise Rejection | Increased noise filtering | Improves operating performance of connected equipment |
| Advanced Diagnostics | Allows for visual indication/testing of the suppressor's functionality | Provides immediate response if suppressor is damaged |
| Suppression Status Alarms | Allows multiple methods of alarm notification | Provides immediate notification through audible, visual and remote signaling if reduced suppression occurs |
| Coordinated Fuse Technology | Coordinated fusing allows disconnection methods for thermal and high-current events | Provides premium surge suppression while managing both thermal and high-current end-of-life events |

**Schneider Electric USA, Inc.** 1751 S. 4800 W., Salt Lake City, UT 84104, USA Telephone: (801)-977-9009 Fax: (801)-977-0200 www.surgelogic.com

Document Number 9990-0130B September 2013 bw

# NQ SurgeLoc SPD Features (continued)

## NQ Panelboard



NQ panelboards are primarily used for lighting and power distribution up to 600 Amps. These panelboards, following the 2008 National Electric Code changes, provide electrical capacity up to 84 circuit breakers. NQ panels are designed with 200% rated copper neutrals for non-linear loads. (NQ max volts 240 Vac, max 200kA Short Circuit Current)

When selecting a panelboard with a SurgeLoc SPD, an additional 12 circuit positions (6 adjacent mounting spaces per side) or 4.5 inches of space on each side are required. For example, if the desired number of circuits is 30, a 42 circuit panelboard is required.

NQ SPD available surge current ratings:
80,100,120,160, 200, 240 kA

## Internal SPDs



### Performance

| | |
|---|---|
| Surge Current Rating per Phase | Up to 240kA |
| Short Circuit Current Rating | 200kA |
| Modes of Protection | 6, 10 |
| Fusing | Individually fused MOVs |
| Thermal Fusing | Yes |
| Overcurrent Fusing | Yes |
| Sine Wave Tracking | Yes |
| EMI/RFI Filtering | Up to -50 dB |
| Operating Frequency | 50/60 Hz |

### Mechanical Description

| | |
|---|---|
| Connection Method | 10 AWG, Stranded |
| Mounting Method/Circuit Type | Parallel |
| Operating Altitude | Sea Level-12,000' (3,658 m) |
| Storage Temperature | -40˚ F (-40˚ C) to 149˚ F (65˚ C) |
| Operating Temp. | -40˚ F (-40˚ C) to 104˚ F (40˚ C) |
| LCD Operating Temp. | 32˚ F (0˚ C) to 122˚ F (50˚ C) |
| Operating Humidity | 0 to 95% non-condensing |

### Diagnostics

Push to test diagnostic button, red and green status LEDs per phase, dry contacts, audible alarm with disable switch and surge counter.

### Options

- Remote monitor

### Safety and Performance

**Type 1 SPD:** cULus Listed per UL 1449 3rd Edition, UL 67 12th Edition, CSA C22.2 No. 29 5th Edition, and CSA C22.2 No. 8 M-1986.

Complies with UL 96A 12th Edition Master Label requirements for Lightning Protection Systems

# NQ SurgeLoc SPD Specifications

## WYE Configured SPD Specifications

| Voltage | Surge Current per Phase | Modes of Protection | Configuration | Model Number | MCOV | $I_n$ | VPR | | | |
|---|---|---|---|---|---|---|---|---|---|---|
| | | | | | | | L-N | L-G | L-L | N-G |
| 120/240V | 80kA | 6 | 1 Ø, 3-wire+G | SSP01BIA08PBQ1 | 150V | 20kA | 700V | 700V | 1200V | 700V |
| 208Y/120V ■ | 80kA | 10 | 3 Ø, Wye, 4-wire+G | SSP02BIA08PBQ1 | 150V | 20kA | 700V | 700V | 1200V | 700V |
| 120/240V | 100kA | 6 | 1 Ø, 3-wire+G | SSP01BIA10PBQ1 | 150V | 20kA | 700V | 700V | 1200V | 700V |
| 208Y/120V ■ | 100kA | 10 | 3 Ø, Wye, 4-wire+G | SSP02BIA10PBQ1 | 150V | 20kA | 700V | 700V | 1200V | 700V |
| 120/240V | 120kA | 6 | 1 Ø, 3-wire+G | SSP01BIA12PBQ1 | 150V | 20kA | 700V | 700V | 1200V | 700V |
| 208Y/120V ■ | 120kA | 10 | 3 Ø, Wye, 4-wire+G | SSP02BIA12PBQ1 | 150V | 20kA | 700V | 700V | 1200V | 700V |
| 120/240V | 160kA | 6 | 1 Ø, 3-wire+G | SSP01BIA16PBQ1 | 150V | 20kA | 700V | 700V | 1200V | 700V |
| 208Y/120V ■ | 160kA | 10 | 3 Ø, Wye, 4-wire+G | SSP02BIA16PBQ1 | 150V | 20kA | 700V | 700V | 1200V | 700V |
| 120/240V | 200kA | 6 | 1 Ø, 3-wire+G | SSP01BIA20PBQ1 | 150V | 20kA | 700V | 700V | 1200V | 700V |
| 208Y/120V ■ | 200kA | 10 | 3 Ø, Wye, 4-wire+G | SSP02BIA20PBQ1 | 150V | 20kA | 700V | 700V | 1200V | 700V |
| 120/240V | 240kA | 6 | 1 Ø, 3-wire+G | SSP01BIA24PBQ1 | 150V | 20kA | 700V | 700V | 1200V | 700V |
| 208Y/120V ■ | 240kA | 10 | 3 Ø, Wye, 4-wire+G | SSP02BIA24PBQ1 | 150V | 20kA | 700V | 700V | 1200V | 700V |

■ 208Y/120 series also applies to the following voltage 220Y/127

## High-Leg Delta (HLD) Configured SPD Specifications

| Voltage | Surge Current per Phase | Modes of Protection | Configuration | Model Number | MCOV | $I_n$ | VPR | | | | | | |
|---|---|---|---|---|---|---|---|---|---|---|---|---|---|
| | | | | | | | L-N | H-N | L-G | H-G | L-L | H-L | N-G |
| 240/120HLD | 80kA | 10 | 3 Ø, HLD, 4-wire+G | SSP03BIA08PBQ1 | 150V | 20kA | 800V | 1200V | 800V | 1000V | 1200V | 1500V | 700V |
| 240/120HLD | 100kA | 10 | 3 Ø, HLD, 4-wire+G | SSP03BIA10PBQ1 | 150V | 20kA | 800V | 1200V | 800V | 1000V | 1200V | 1500V | 700V |
| 240/120HLD | 120kA | 10 | 3 Ø, HLD, 4-wire+G | SSP03BIA12PBQ1 | 150V | 20kA | 800V | 1200V | 800V | 1000V | 1200V | 1500V | 700V |
| 240/120HLD | 160kA | 10 | 3 Ø, HLD, 4-wire+G | SSP03BIA16PBQ1 | 150V | 20kA | 800V | 1200V | 800V | 1000V | 1200V | 1500V | 700V |
| 240/120HLD | 200kA | 10 | 3 Ø, HLD, 4-wire+G | SSP03BIA20PBQ1 | 150V | 20kA | 800V | 1200V | 800V | 1000V | 1200V | 1500V | 700V |
| 240/120HLD | 240kA | 10 | 3 Ø, HLD, 4-wire+G | SSP03BIA24PBQ1 | 150V | 20kA | 800V | 1200V | 800V | 1000V | 1200V | 1500V | 700V |

Model numbers not recognized as line items in Schneider Electric ordering system until a suffix code is applied

**Schneider Electric USA, Inc.**
1751 S. 4800 W.
Salt Lake City, UT 84104
Telephone: (801)-977-9009
www.surgelogic.com

**Schneider Electric México, S.A. de C.V.**
Calz. J. Rojo Gómez 1121-A
Col. Gpe. del Moral 09300 México, D.F.
Tel. 55-5804-5000
www.schneider-electric.com.mx

**Schneider Electric Canada, Inc.**
5985 McLaughlin Road
Mississauga, ON L5R 1B8 Canada
Tel:1-800-565-6699
www.schneider-electric.ca

© 2013 Schneider Electric. All rights reserved. Schneider Electric, Square D, and Surgelogic are trademarks owned by Schneider Electric Industries SAS or its affiliated companies.
All other trademarks are the property of their respective owners.

Document Number 9990-0130B

September 2013 bw

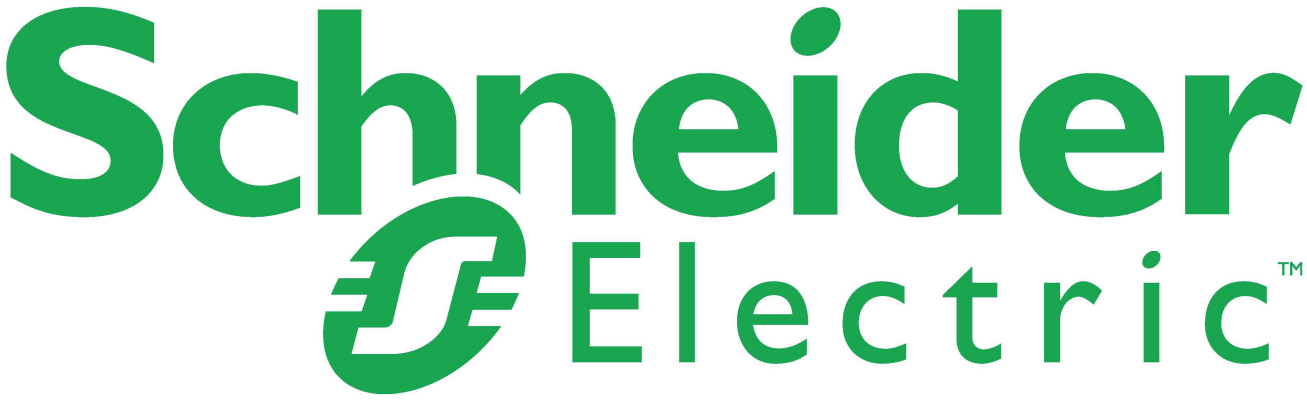


# SERVICES

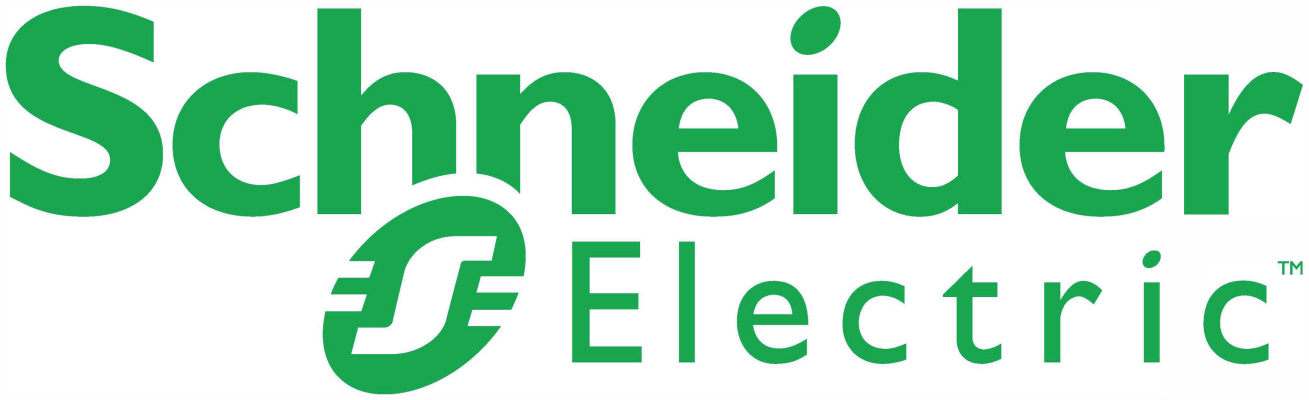


# BILL OF MATERIALS

| | | |
|---|---|---|
| **Q2C Number:** 41753775 | **Quote Number:** 2 | **Revision Number:** 1 |
| **Project Name:** IQALUIT WASTE WATER TREATMENT UPGR | | **Quote Name:** |

| Item No. | Qty. | Catalog Number / Details |
|---|---|---|
| | | **SERVICES** |
| 005-00 | 1 | **Designation:** Kyle RIngelstein<br>OTTAWA SERVICE<br>CSSQ41753775 ARC FLASH<br>Coordination Study<br>Short Circuit Study<br>Arc Flash Analysis<br>- Electrical Studies provided for new Schneider Electric equipment only, as per this bill of material |

**Date: July 11, 2019**

REVIEWED BY CONTRACTOR
Kudlik Construction Ltd.
NAME: Sandra Rousseau P.Eng
DATE: Jul 11, 2019

# Transmittal

**Arctic Electrical Nunavut Ltd**
PO Box 1381
Iqaluit, Nu.
X0A 0H0
Phone: 867-975-3494
**From: Lee Pitcher**

**Project** **Waste Waste Treatment Plant**
**Location** Iqaluit NU
**To** Kudlik Construction
Contact: Sandra Rousseau P.Eng.
srousseau@kudlik.biz



SE-18R4 SU-ELE18R4
PO-P19-108 Nedco

Attached are the following items:

- [x] Drawings
- [ ] Prints
- [ ] Plans
- [x] Specifications
- [ ] Information
- [ ] Submittals

Other:

THESE ARE TRANSMITTED FOR:

- [ ] Prior Approval
- [ ] Approval
- [ ] Approval as Submitted
- [ ] Approval as Noted
- [x] Resubmittal for Approval
- [ ] Corrections
- [ ] Your Use
- [ ] Review and Comment
- [ ] Record

Bids due on:
Other:

| Qty | Type | MFG | Part |
|---|---|---|---|

26 24 19 Motor Control Centres

STANTEC PROJECT #: 110126045 SUBMITTAL # ELE 018-R4

This review by Stantec is for general conformance with the design concept of Stantec's design of the:

- [ ] Architectural
- [ ] Structural
- [ ] Mechanical
- [x] Electrical
- [ ] Other _____

component(s) only and does not mean that Stantec has verified or approves the shop drawing(s). The Contractor remains solely responsible for the shop drawing(s) and this review by Stantec does not relieve the Contractor of the Contractor's responsibility for errors or omissions in the shop drawing(s) or for meeting all requirements of the contract documents. This review does not mean that Stantec approves the detailed design inherent in the shop drawing, responsibility for which shall remain with the Contractor submitting same, nor does this review mean that Stantec accepts any deviation of the shop drawing(s) from the contract documents. The Contractor is responsible for confirming all dimensions and correlating them at the job site, for all construction means, methods and techniques, and for coordination of construction work of all trades, including coordination of all shop drawings.

Stantec

- [ ] REVIEWED
- [x] REVIEWED, AS NOTED
- [ ] REVISE AND RESUBMIT
- [ ] NOT REVIEWED

DATE 2019-07-12

BY Jamie McLeish

Note, contractor remains responsible for the shop drawing content and coordination with other disciplines. Stantec's review does not relieve the contractor of their contractual responsibility.

**Notes:**
Please review the attached approval drawings carefully. Production cannot be scheduled until a signed copy of the final approved drawing are received. Be aware that once drawings are approved, any errors due to incorrect information are the responsibility of the contractor.

Do not hesitate to contact me if you have any questions or concerns.

SQUARE D
by Schneider Electric

| | | | |
|---|---|---|---|
| Job Name: | IQALUIT WWTP MCC UPGRADES | Square D Quotation #: | 41428112 |
| Job Location: | SALABERRY–DE–VALLEYFIELD, QC | Quotation Revision #: | |
| | | Sales Contact: | CURTIS DADSWELL |
| | | Sales Contact Location: | 817 |
| Purchaser: | 23010–NEDCO DIV OF REXEL CANADA | Customer: | ARCTIC ELECTRIC |
| Purchaser PO #: | (WR2)14265D | Customer PO #: | |
| User: | | Architect: | |
| User Location: | | Cons. Engineer: | |
| Drawing Status: | APPROVAL | | |

# TABLE OF CONTENTS

SQUARE D FACTORY ORDER NUMBER: 41428112–001


| Equipment Designation | Equipment Type | Drawing Type | Drawing Number | Page | Revision Level |
|---|---|---|---|---|---|
| MCC – 1 | MODEL 6 MCC | ELEVATION | F41428112–001–01 | 1 | C |
| | | | F41428112–001–01 | 2 | C |
| | | | F41428112–001–01 | 3 | C |
| | | SEISMIC | S41428112–001–01 | 1 | C |
| | | ONE LINE DIAGRAM | O41428112–001–01 | 1 | C |
| | | | O41428112–001–01 | 2 | C |
| | | UNIT INFORMATION | I41428112–001–01 | 1 | C |
| | | | I41428112–001–01 | 2 | C |
| | | | I41428112–001–01 | 3 | C |
| | | | I41428112–001–01 | 4 | C |
| | | | I41428112–001–01 | 5 | C |
| | | ELEMENTARY | E41428112–001–01 | 1 | C |
| | | | E41428112–001–02 | 1 | C |
| | | | E41428112–001–03 | 1 | C |
| | | | E41428112–001–04 | 1 | C |
| | | | E41428112–001–04 | 2 | C |
| | | | E41428112–001–05 | 1 | C |
| | | | E41428112–001–05 | 2 | C |
| | | | E41428112–001–06 | 1 | C |
| | | | E41428112–001–06 | 2 | C |
| | | | E41428112–001–07 | 1 | C |
| | | | E41428112–001–07 | 2 | C |
| | | | E41428112–001–08 | 1 | C |
| | | | E41428112–001–08 | 2 | C |
| | | | E41428112–001–09 | 1 | C |
| | | | E41428112–001–09 | 2 | C |
| | | | E41428112–001–10 | 1 | C |
| | | | E41428112–001–10 | 2 | C |
| | | | E41428112–001–11 | 1 | C |
| | | | E41428112–001–11 | 2 | C |
| | | | E41428112–001–12 | 1 | C |
| | | | E41428112–001–13 | 1 | C |

# TABLE OF CONTENTS

SQUARE D FACTORY ORDER NUMBER: 41428112-001


| Equipment Designation | Equipment Type | Drawing Type | Drawing Number | Page | Revision Level |
|---|---|---|---|---|---|
| | | | E41428112-001-13 | 2 | C |

| REV | DESCRIPTION | BY | DATE | | | | | | | | |
|---|---|---|---|---|---|---|---|---|---|---|---|
| – | ---- | -- | --/--/-- | A | APPROVAL RESUBMIT | RN | 06/19/2019 | C | APPROVAL RESUBMITAL | MLC | 07/11/2019 |
| | | | | B | REAPPROVAL | TA | 06/21/2019 | – | ---- | -- | --/--/-- |

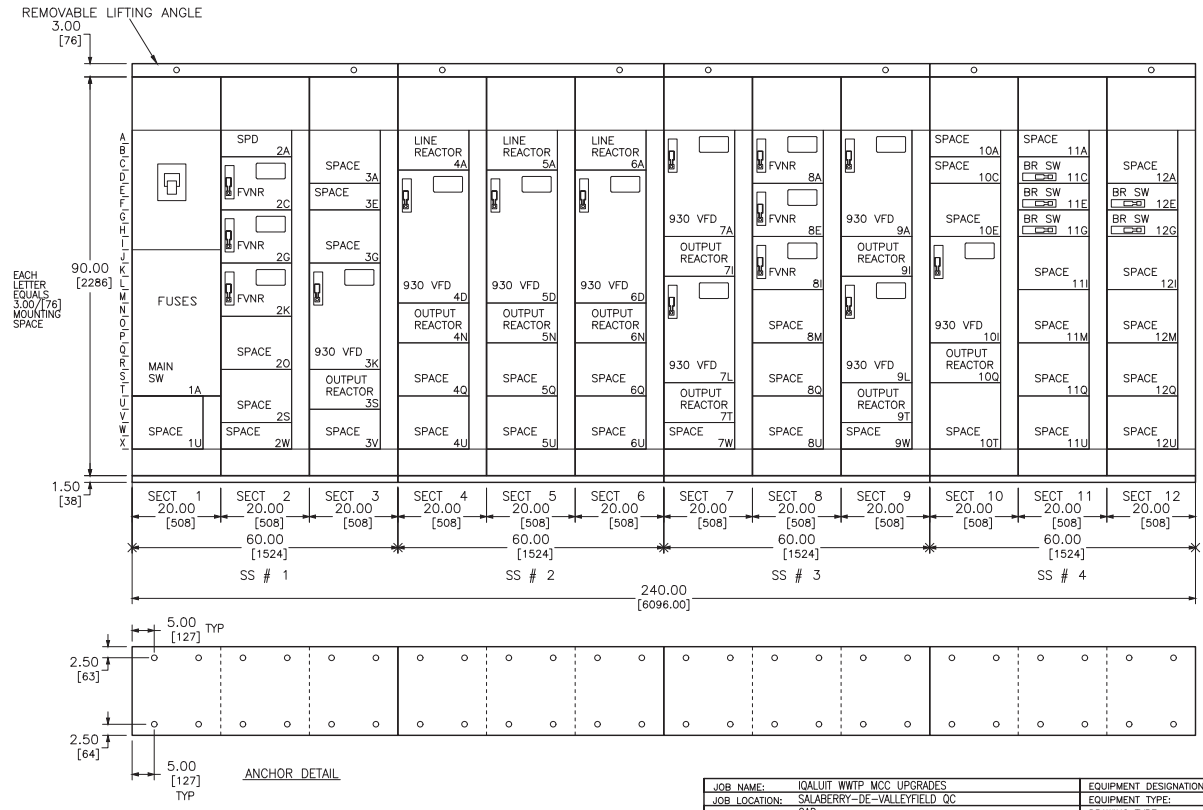


DUAL DIMENSIONS: INCHES / MILLIMETERS

| | | | |
|---|---|---|---|
| JOB NAME: | IQALUIT WWTP MCC UPGRADES | EQUIPMENT DESIGNATION: | MCC – 1 |
| JOB LOCATION: | SALABERRY–DE–VALLEYFIELD QC | EQUIPMENT TYPE: | MODEL 6 MOTOR CONTROL CENTER |
| DRAWN BY: | CAD | DRAWING TYPE: | ELEVATION |
| ENGR: | MLC | | |
| DATE: | MAY 21, 2019 | | |
| DRAWING STATUS: | APPROVAL | DWG# | F41428112–001–01 |

| REV | DESCRIPTION | BY | DATE | | | | | | | | | |
|---|---|---|---|---|---|---|---|---|---|---|---|---|
| B | REAPPROVAL | TA | 06/21/2019 | A | APPROVAL RESUBMIT | RN | 06/19/2019 | – | ---- | -- | --/--/-- |
| | | | | C | APPROVAL RESUBMITAL | MLC | 07/11/2019 | – | ---- | -- | --/--/-- |

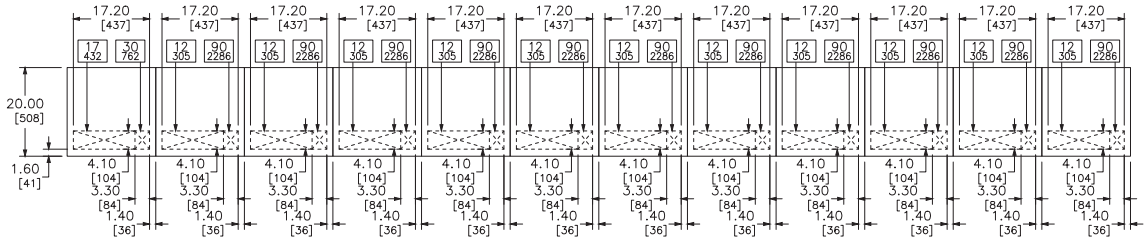


TOP VIEW

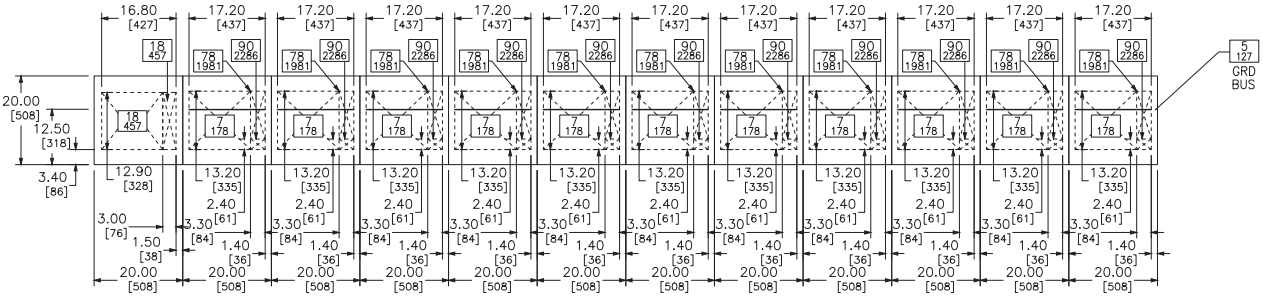


FLOOR VIEW

CROSSED AREA REPRESENTS CONDUIT ENTRY AREA. NUMBERS IN BOXES INDICATE VERTICAL CLEARANCE TO NEAREST OBSTRUCTION.

DUAL DIMENSIONS: INCHES / MILLIMETERS

| | | | |
|---|---|---|---|
| JOB NAME: | IQALUIT WWTP MCC UPGRADES | EQUIPMENT DESIGNATION: | MCC – 1 |
| JOB LOCATION: | SALABERRY–DE–VALLEYFIELD QC | EQUIPMENT TYPE: | MODEL 6 MOTOR CONTROL CENTER |
| DRAWN BY: | CAD | DRAWING TYPE: | ELEVATION |
| ENGR: | MLC | | |
| DATE: | MAY 21, 2019 | | |
| DRAWING STATUS: | APPROVAL | DWG# | F41428112-001-01 |

| REV | DESCRIPTION | BY | DATE | | | | | | | | | |
|---|---|---|---|---|---|---|---|---|---|---|---|---|
| B | REAPPROVAL | TA | 06/21/2019 | A | APPROVAL RESUBMIT | RN | 06/19/2019 | – | ---- | -- | --/--/-- |
| | | | | C | APPROVAL RESUBMITAL | MLC | 07/11/2019 | – | ---- | -- | --/--/-- |

## GENERAL NOTES

Class 1 Type B Wiring

## PRODUCT DESCRIPTION AND RATINGS

**POWER SYSTEM DATA:**

600V 3PH 3W 60Hz
SHORT CIRCUIT RATING: 65kA
POWER ENTERS: Main Fusible Switch Top Section 1
CONTROL POWER: 120Vac

**BUS SYSTEM DATA:**

MAIN HORIZONTAL BUS: 800 Amp Copper/Tin Plated / 1.5"
BUS BRACING: 65kA
VERTICAL BUS: 300 Amp Tin Plated Copper
HORIZONTAL GROUND BUS: .25" X 1.0" (6.35mm X 25.4mm) Tin Plated Copper
Units Securely Grounded To Structure

**ENCLOSURE DATA:**

ENCLOSURE TYPE: 20" DEEP Type 1A
EXTERIOR COLOR: Electrodeposition Finish ANSI 49 Medium Light Grey
INTERIOR COLOR: Electrodeposition Finish White
REMOVABLE 3" [76mm] LIFTING ANGLE

**STRUCTURE MODIFICATIONS:**

Ground Bus Lug : Main Section
Rodent Barriers 1,12
Manual Bus Shutters 1,2,3,4,5,6,7,8,9,10,11,12
Premium Barrier System 1,2,3,4,5,6,7,8,9,10,11,12
Copper Vertical Ground Bus 1,2,3,4,5,6,7,8,9,10,11,12
Wire Retainers 1,2,3,4,5,6,7,8,9,10,11,12

**EQUIPMENT WEIGHT:**

SHIPPING SPLIT # 1: 2250.00 Lbs. (1020.60 Kg.)
SHIPPING SPLIT # 2: 2250.00 Lbs. (1020.60 Kg.)
SHIPPING SPLIT # 3: 2250.00 Lbs. (1020.60 Kg.)
SHIPPING SPLIT # 4: 2250.00 Lbs. (1020.60 Kg.)
TOTAL LINEUP WEIGHT (APPROX): 9000.00 Lbs. (4082.40 Kg.)

**PRODUCT ACCESSORIES:**

Seismic Qualified IBC/ASCE7
Drip Hoods

| | | | |
|---|---|---|---|
| JOB NAME: | IQALUIT WWTP MCC UPGRADES | EQUIPMENT DESIGNATION: | MCC – 1 |
| JOB LOCATION: | SALABERRY-DE-VALLEYFIELD QC | EQUIPMENT TYPE: | MODEL 6 MOTOR CONTROL CENTER |
| DRAWN BY: | CAD | DRAWING TYPE: | ELEVATION |
| ENGR: | MLC | | |
| DATE: | MAY 21, 2019 | | |
| DRAWING STATUS: | APPROVAL | DWG# | F41428112-001-01 PG 3 OF 3 REV C |

| REV | DESCRIPTION | BY | DATE | | | | | | | | | |
|---|---|---|---|---|---|---|---|---|---|---|---|---|
| B | REAPPROVAL | TA | 06/21/2019 | A | APPROVAL RESUBMIT | RN | 06/21/2019 | – | ---- | -- | --/--/-- |
| | | | | C | APPROVAL RESUBMITAL | MLC | 07/11/2019 | – | ---- | -- | --/--/-- |

## REQUIREMENTS FOR SEISMIC RATING

### ANCHORING CONDITIONS:

To Maintain Seismic Qualifications, Equipment Must Be Installed Per Installation Manual 80459–641–XX And Per Any Seismic Anchoring Details Provided By Others. Do Not Install Equipment Before Approved Seismic Anchoring Details Have Been Obtained And Site Preparations Have Been Made In Accordance With The Approved Seismic Anchoring Details. All Post–Installed Anchors Shall Be Approved For Seismic Loads.

Consideration Must Be Made For Conduit Entry Into Each Section When Developing Mounting Pad Reinforcement Locations. See Conduit Entry Details For Dimensional Information.

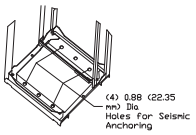


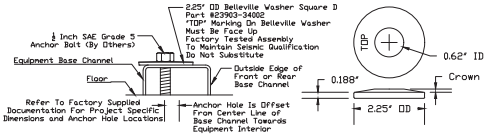


Each MCC Section Must Be Anchored At Four Locations (See Above Details). Anchor Bolt Mounting Points Are .88/[22] Diameter Holes Located 1.50/[38] Above The Base Of The MCC Section. Use Dimensions From The Anchor Detail To Determine Mounting Locations.

The Belleville Washer (Shown In Detail Above) Used For Anchoring Connections Is A Tested Component And Is Required To Maintain Position Retention Of The Equipment. The Slip Critical Connection Performance Of The Bolted Connection Was Established To The Shake Table Tested Seismic Capacity Of The Equipment As Shown On The Equipment Seismic Certificate Supplied At The Time Of Order.

### CENTER OF GRAVITY:

The CG Information Provided Below Should Only Be Used For Seismic Anchoring Calculations.

Elevation Center Of Gravity: 62.00/[1575] Up From Floor Except Masterpact NW Main Use 54.00/[1372] Up From Floor

Depth Center Of Gravity: 7.50/[191] or 10.00/[254] From Rear For 15.00/[381] or 20.00/[508] Deep Sections Respectively. Consult Factory For Sections Taller Than 94.50/[2400].

Vertical Center of Gravity: Use Centerline Of Section From Left To Right

### SECTION WEIGHTS:

The Weights Shown Below Should Only Be Used For Calculating Seismic Anchoring Requirements And Do Not Represent Actual Section Weights As Shipped.

| | |
|---|---|
| 1200 Lbs. (544.3 Kg.) | 35.00/[889] Wide Sections |
| 1300 Lbs. (589.7 Kg.) | 20.00/[508] Wide Sections |
| 1500 Lbs. (680.4 Kg.) | 25.00/[635] And 30.00/[762] Wide Sections* |
| *1900 Lbs. (861.8 Kg.) | 30.00/[762] Wide Section With Masterpact NW Main |
| 2250 Lbs. (1020.6 Kg.) | 50.00/[1270] Wide Section With 18 Pulse Drive |
| 2750 Lbs. (1247.4 Kg.) | 65.00/[1651] Wide Section With 18 Pulse Drive |

| | | | |
|---|---|---|---|
| JOB NAME: | IQALUIT WWTP MCC UPGRADES | EQUIPMENT DESIGNATION: | MCC – 1 |
| JOB LOCATION: | SALABERRY–DE–VALLEYFIELD QC | EQUIPMENT TYPE: | MODEL 6 MOTOR CONTROL CENTER |
| DRAWN BY: | CAD | DRAWING TYPE: | SEISMIC |
| ENGR: | MLC | | |
| DATE: | MAY 21, 2019 | | |
| DRAWING STATUS: | APPROVAL | DWG# | S41428112–001–01 PG 1 OF 1 REV C |

| REV | DESCRIPTION | BY | DATE |
|---|---|---|---|
| B | REAPPROVAL | TA | 06/21/2019 |
| A | APPROVAL RESUBMIT | RN | 06/19/2019 |
| C | APPROVAL RESUBMITAL | MLC | 07/11/2019 |
| – | ---- | -- | --/--/-- |
| – | ---- | -- | --/--/-- |

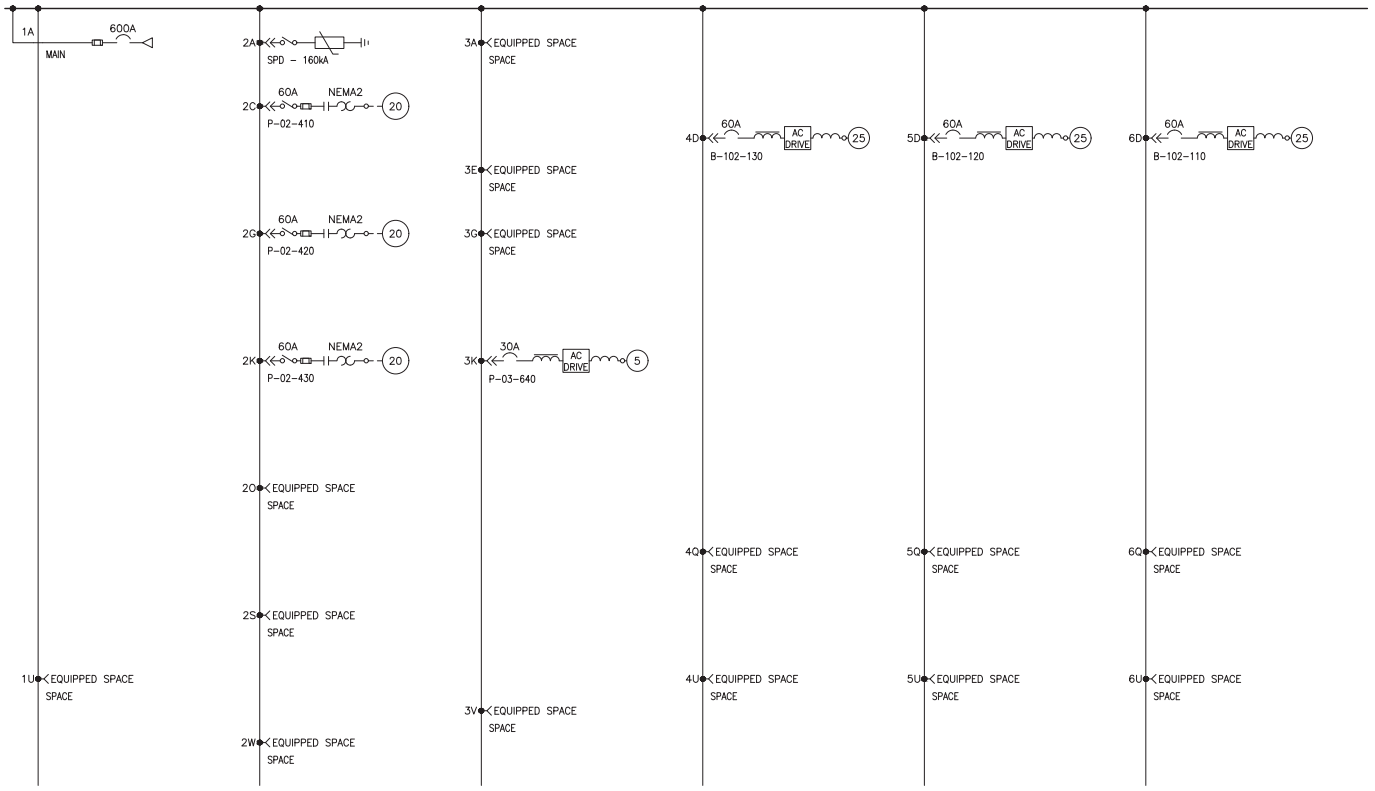


| | |
|---|---|
| JOB NAME: | IQALUIT WWTP MCC UPGRADES |
| JOB LOCATION: | SALABERRY-DE-VALLEYFIELD QC |
| DRAWN BY: | CAD |
| ENGR: | MLC |
| DATE: | MAY 21, 2019 |
| DRAWING STATUS: | APPROVAL |

| | |
|---|---|
| EQUIPMENT DESIGNATION: | MCC – 1 |
| EQUIPMENT TYPE: | MODEL 6 MOTOR CONTROL CENTER |
| DRAWING TYPE: | ONE LINE DIAGRAM |

[redacted]

DWG# 041428112-001-01 | PG 1 OF 2 | REV C

| REV | DESCRIPTION | BY | DATE |
|---|---|---|---|
| B | REAPPROVAL | TA | 06/21/2019 |
| A | APPROVAL RESUBMIT | RN | 06/19/2019 |
| C | APPROVAL RESUBMITAL | MLC | 07/11/2019 |
| – | ---- | -- | --/--/-- |
| – | ---- | -- | --/--/-- |

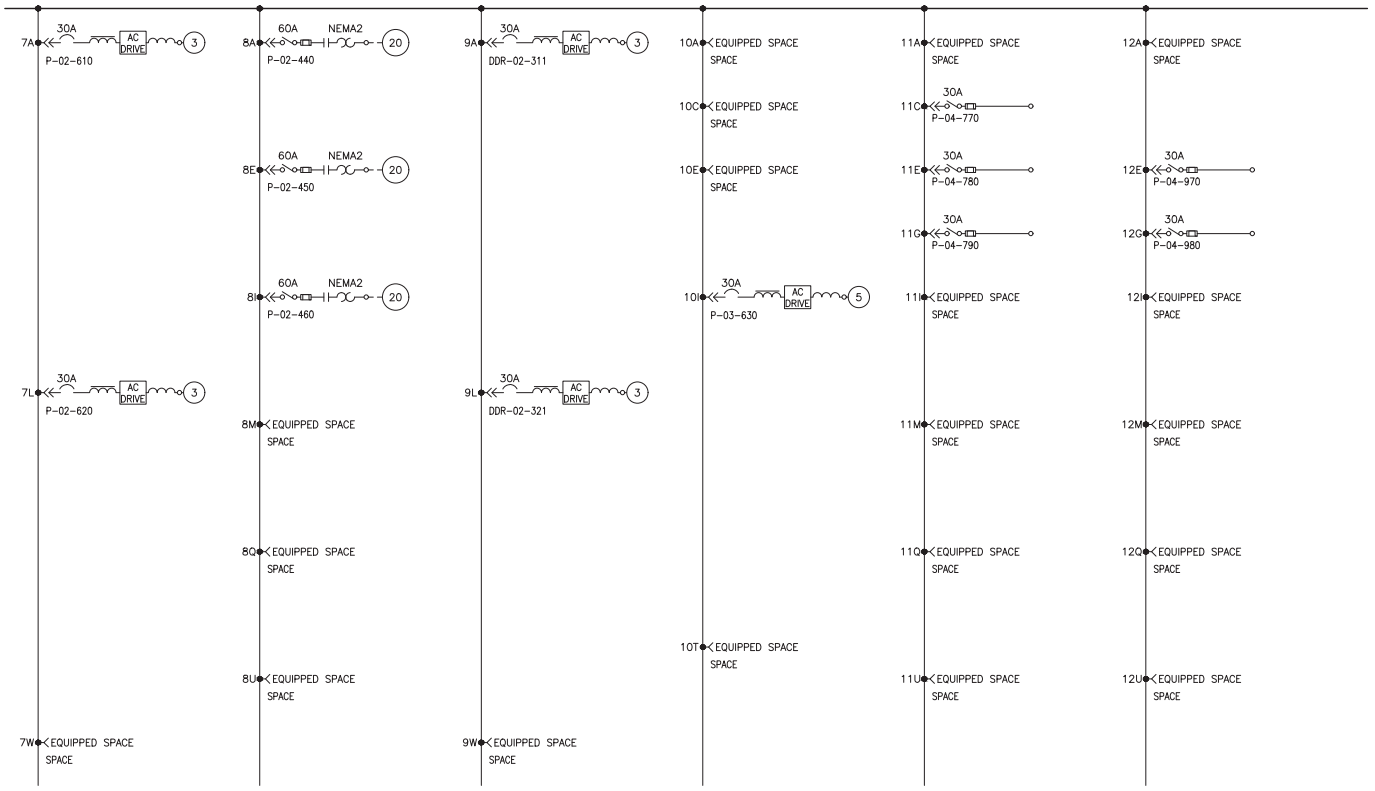


| | |
|---|---|
| JOB NAME: | IQALUIT WWTP MCC UPGRADES |
| JOB LOCATION: | SALABERRY-DE-VALLEYFIELD QC |
| DRAWN BY: | CAD |
| ENGR: | MLC |
| DATE: | MAY 21, 2019 |
| DRAWING STATUS: | APPROVAL |

| | |
|---|---|
| EQUIPMENT DESIGNATION: | MCC – 1 |
| EQUIPMENT TYPE: | MODEL 6 MOTOR CONTROL CENTER |
| DRAWING TYPE: | ONE LINE DIAGRAM |

[redacted]

DWG# 041428112-001-01 | PG 2 OF 2 | REV C

| REV | DESCRIPTION | BY | DATE | | |

| REV | DESCRIPTION | BY | DATE | | | | | | |
|---|---|---|---|---|---|---|---|---|---|
| B | REAPPROVAL | TA | 06/21/2019 | A | APPROVAL RESUBMIT | RN | 06/19/2019 | – | ---- | -- | --/--/-- |
| | | | | C | APPROVAL RESUBMITAL | MLC | 07/11/2019 | – | ---- | -- | --/--/-- |

| UNIT LOC | UNIT NAMEPLATES | UNIT TYPE | SIZE | HP | FRAME AMPS | TRIP AMPS | CONTROL SOURCE | VA | FUSE SIZE PRI | FUSE SIZE SEC | INTERLOCKS NO | INTERLOCKS NC | PILOT DEVICES: LED 22 mm ** ON LIGHT | PILOT DEVICES: LED 22 mm ** OFF LIGHT | PILOT DEVICES: LED 22 mm ** ADDL P/L | PILOT DEVICES: LED 22 mm ** SS / PB | OTHER UNIT FEATURES | ELEMENTARY # |
|---|---|---|---|---|---|---|---|---|---|---|---|---|---|---|---|---|---|---|
| 3K | P-03-640 | ATV930 | U40 | 5 | FU SW 30 | | CONTROL TRANSFORMER | 100 | .50 | 1.00 | | | RED PTT | | | HOA SS SPD POT | #16 AWG MTW CONTROL WIRE, CLASS J FUSE CLIPS, STD WIRE LABELS | E41428112-001-04 |
| | | | | | | | | | | | | | | | | | | |
| 3S | ASD OUTPUT REACTOR FOR P-03-640 | OUTPUT REACTOR | | | | | | | | | | | | | | | | E41428112-001-04 |
| 3V | SPACE | SPACE | | | | | | | | | | | | | | | | |
| 4A | ASD LINE REACTOR FOR B-102-130 | LINE REACTOR | | | | | | | | | | | | | | | | E41428112-001-05 |
| 4D | B-102-130 | ATV930 | D22 | 25 | FU SW 60 | | CONTROL TRANSFORMER | 300 | 1.25 | 3.20 | | | RED PTT | | | HOA SS SPD POT | #16 AWG MTW CONTROL WIRE, CLASS J FUSE CLIPS, STD WIRE LABELS | E41428112-001-05 |
| | | | | | | | | | | | | | | | | | | |
| 4N | ASD OUTPUT REACTOR FOR B-102-130 | OUTPUT REACTOR | | | | | | | | | | | | | | | | E41428112-001-05 |
| 4Q | SPACE | SPACE | | | | | | | | | | | | | | | | |
| 4U | SPACE | SPACE | | | | | | | | | | | | | | | | |
| 5A | ASD LINE REACTOR FOR B-102-120 | LINE REACTOR | | | | | | | | | | | | | | | | E41428112-001-06 |
| 5D | B-102-120 | ATV930 | D22 | 25 | FU SW 60 | | CONTROL TRANSFORMER | 300 | 1.25 | 3.20 | | | RED PTT | | | HOA SS SPD POT | #16 AWG MTW CONTROL WIRE, CLASS J FUSE CLIPS, STD WIRE LABELS | E41428112-001-06 |
| | | | | | | | | | | | | | | | | | | |
| 5N | ASD OUTPUT REACTOR FOR B-102-120 | OUTPUT REACTOR | | | | | | | | | | | | | | | | E41428112-001-06 |
| 5Q | SPACE | SPACE | | | | | | | | | | | | | | | | |
| 5U | SPACE | SPACE | | | | | | | | | | | | | | | | |
| 6A | ASD LINE REACTOR FOR B-102-110 | LINE REACTOR | | | | | | | | | | | | | | | | E41428112-001-07 |
| 6D | B-102-110 | ATV930 | D22 | 25 | FU SW 60 | | CONTROL TRANSFORMER | 300 | 1.25 | 3.20 | | | RED PTT | | | HOA SS SPD POT | #16 AWG MTW CONTROL WIRE, CLASS J FUSE CLIPS, STD WIRE LABELS | E41428112-001-07 |
| | | | | | | | | | | | | | | | | | | |
| 6N | ASD OUTPUT REACTOR FOR B-102-110 | OUTPUT REACTOR | | | | | | | | | | | | | | | | E41428112-001-07 |
| UNIT LOC | **UNIT NAMEPLATES** | UNIT TYPE | SIZE | HP | FRAME AMPS | TRIP AMPS | CONTROL SOURCE | VA | PRI | SEC | NO | NC | ON LIGHT | OFF LIGHT | ADDL P/L | SS / PB | OTHER UNIT FEATURES | ELEMENTARY # |
| | | | | | | | | | FUSE SIZE | | INTERLOCKS | | PILOT DEVICES: LED 22 mm ** | | | | | |

| | |
|---|---|
| JOB NAME: | IQALUIT WWTP MCC UPGRADES |
| JOB LOCATION: | SALABERRY-DE-VALLEYFIELD QC |
| DRAWN BY: | CAD |
| ENGR: | MLC |
| DATE: | MAY 21, 2019 |
| DRAWING STATUS: | APPROVAL |

| | |
|---|---|
| EQUIPMENT DESIGNATION: | MCC – 1 |
| EQUIPMENT TYPE: | MODEL 6 MOTOR CONTROL CENTER |
| DRAWING TYPE: | UNIT INFORMATION |

[redacted]

DWG# I41428112-001-01 | PG 2 OF 5 | REV C

| REV | DESCRIPTION | BY | DATE | | REV | DESCRIPTION | BY | DATE |
|---|---|---|---|---|---|---|---|---|
| B | REAPPROVAL | TA | 06/21/2019 | | C | APPROVAL RESUBMITAL | MLC | 07/11/2019 |
| A | APPROVAL RESUBMIT | RN | 06/19/2019 | | – | ---- | -- | --/--/-- |
| – | ---- | -- | --/--/-- | | | | | |

| UNIT LOC | UNIT NAMEPLATES | UNIT TYPE | SIZE | HP | FRAME AMPS | TRIP AMPS | CONTROL SOURCE | VA | FUSE SIZE PRI | FUSE SIZE SEC | INTERLOCKS NO | INTERLOCKS NC | PILOT DEVICES: LED 22 mm ** ON LIGHT | PILOT DEVICES: LED 22 mm ** OFF LIGHT | PILOT DEVICES: LED 22 mm ** ADDL P/L | PILOT DEVICES: LED 22 mm ** SS / PB | OTHER UNIT FEATURES | ELEMENTARY # |
|---|---|---|---|---|---|---|---|---|---|---|---|---|---|---|---|---|---|---|
| 6Q | SPACE | SPACE | | | | | | | | | | | | | | | | |
| 6U | SPACE | SPACE | | | | | | | | | | | | | | | | |
| 7A | P-02-610 | ATV930 | U22 | 3 | FU SW 30 | | CONTROL TRANSFORMER | 100 | .50 | 1.00 | | | RED PIT | | | HOA SS SPD POT | #16 AWG MTW CONTROL WIRE, CLASS J FUSE CLIPS, STD WIRE LABELS | E41428112-001-08 |
| | | | | | | | | | | | | | | | | | | |
| 7I | ASD OUTPUT REACTOR FOR P-02-610 | OUTPUT REACTOR | | | | | | | | | | | | | | | | E41428112-001-08 |
| 7L | P-02-620 | ATV930 | U22 | 3 | FU SW 30 | | CONTROL TRANSFORMER | 100 | .50 | 1.00 | | | RED PIT | | | HOA SS SPD POT | #16 AWG MTW CONTROL WIRE, CLASS J FUSE CLIPS, STD WIRE LABELS | E41428112-001-09 |
| | | | | | | | | | | | | | | | | | | |
| 7T | ASD OUTPUT REACTOR FOR P-02-620 | OUTPUT REACTOR | | | | | | | | | | | | | | | | E41428112-001-09 |
| 7W | SPACE | SPACE | | | | | | | | | | | | | | | | |
| 8A | P-02-440 | FVNR | NEMA 2 | 20 | FU SW 60 | | CONTROL TRANSFORMER | 100 | .50 | 1.00 | 2 | 1 | RED | | | HOA SS | #14 AWG MTW CONTROL WIRE, 600V SYSTEM, CLASS 10/20 O/L (SELECTABLE), CLASS J FUSE CLIPS, | E41428112-001-03 |
| | | | | | | | | | | | | | | | | | MOTOR LOGIC O/L NEMA SIZE 2, N.C. ISOLATED AUX O/L CONTACTS, STD WIRE LABELS | |
| | | | | | | | | | | | | | | | | | | |
| 8E | P-02-450 | FVNR | NEMA 2 | 20 | FU SW 60 | | CONTROL TRANSFORMER | 100 | .50 | 1.00 | 2 | 1 | RED | | | HOA SS | #14 AWG MTW CONTROL WIRE, 600V SYSTEM, CLASS 10/20 O/L (SELECTABLE), CLASS J FUSE CLIPS, | E41428112-001-03 |
| | | | | | | | | | | | | | | | | | MOTOR LOGIC O/L NEMA SIZE 2, N.C. ISOLATED AUX O/L CONTACTS, STD WIRE LABELS | |
| | | | | | | | | | | | | | | | | | | |
| 8I | P-02-460 | FVNR | NEMA 2 | 20 | FU SW 60 | | CONTROL TRANSFORMER | 100 | .50 | 1.00 | 2 | 1 | RED | | | HOA SS | #14 AWG MTW CONTROL WIRE, 600V SYSTEM, CLASS 10/20 O/L (SELECTABLE), CLASS J FUSE CLIPS, | E41428112-001-03 |
| | | | | | | | | | | | | | | | | | MOTOR LOGIC O/L NEMA SIZE 2, N.C. ISOLATED AUX O/L CONTACTS, STD WIRE LABELS | |
| | | | | | | | | | | | | | | | | | | |
| 8M | SPACE | SPACE | | | | | | | | | | | | | | | | |
| 8Q | SPACE | SPACE | | | | | | | | | | | | | | | | |

| UNIT LOC | UNIT NAMEPLATES | UNIT TYPE | SIZE | HP | FRAME AMPS | TRIP AMPS | CONTROL SOURCE | VA | FUSE SIZE PRI | FUSE SIZE SEC | INTERLOCKS NO | INTERLOCKS NC | PILOT DEVICES: LED 22 mm ** ON LIGHT | PILOT DEVICES: LED 22 mm ** OFF LIGHT | PILOT DEVICES: LED 22 mm ** ADDL P/L | PILOT DEVICES: LED 22 mm ** SS / PB | OTHER UNIT FEATURES | ELEMENTARY # |
|---|---|---|---|---|---|---|---|---|---|---|---|---|---|---|---|---|---|---|
| | | | | | | | | | FUSE SIZE | | INTERLOCKS | | PILOT DEVICES: LED 22 mm ** | | | | | |

| | |
|---|---|
| JOB NAME: | IQALUIT WWTP MCC UPGRADES |
| JOB LOCATION: | SALABERRY-DE-VALLEYFIELD QC |
| DRAWN BY: | CAD |
| ENGR: | MLC |
| DATE: | MAY 21, 2019 |
| DRAWING STATUS: | APPROVAL |

| | |
|---|---|
| EQUIPMENT DESIGNATION: | MCC – 1 |
| EQUIPMENT TYPE: | MODEL 6 MOTOR CONTROL CENTER |
| DRAWING TYPE: | UNIT INFORMATION |

[redacted]

DWG# I41428112-001-01 | PG 3 OF 5 | REV C

| REV | DESCRIPTION | BY | DATE | REV | DESCRIPTION | BY | DATE |
|---|---|---|---|---|---|---|---|
| B | REAPPROVAL | TA | 06/21/2019 | C | APPROVAL RESUBMITAL | MLC | 07/11/2019 |
| A | APPROVAL RESUBMIT | RN | 06/19/2019 | – | ---- | -- | --/--/-- |
| – | ---- | -- | --/--/-- | | | | |

| UNIT LOC | UNIT NAMEPLATES | UNIT TYPE | SIZE | HP | FRAME AMPS | TRIP AMPS | CONTROL SOURCE | VA | FUSE SIZE PRI | FUSE SIZE SEC | INTERLOCKS NO | INTERLOCKS NC | PILOT DEVICES: LED 22 mm ** ON LIGHT | PILOT DEVICES: LED 22 mm ** OFF LIGHT | PILOT DEVICES: LED 22 mm ** ADDL P/L | PILOT DEVICES: LED 22 mm ** SS / PB | OTHER UNIT FEATURES | ELEMENTARY # |
|---|---|---|---|---|---|---|---|---|---|---|---|---|---|---|---|---|---|---|
| 8U | SPACE | SPACE | | | | | | | | | | | | | | | | |
| 9A | DDR-02-311 | ATV930 | U22 | 3 | FU SW 30 | | CONTROL TRANSFORMER | 100 | .50 | 1.00 | | | RED PTT | | | HOA SS SPD POT | #16 AWG MTW CONTROL WIRE, CLASS J FUSE CLIPS, STD WIRE LABELS | E41428112-001-10 |
| | | | | | | | | | | | | | | | | | | |
| 9I | ASD OUTPUT REACTOR FOR DDR-02-311 | OUTPUT REACTOR | | | | | | | | | | | | | | | | E41428112-001-10 |
| 9L | DDR-02-321 | ATV930 | U22 | 3 | FU SW 30 | | CONTROL TRANSFORMER | 100 | .50 | 1.00 | | | RED PTT | | | HOA SS SPD POT | #16 AWG MTW CONTROL WIRE, CLASS J FUSE CLIPS, STD WIRE LABELS | E41428112-001-11 |
| | | | | | | | | | | | | | | | | | | |
| 9T | ASD OUTPUT REACTOR FOR DDR-02-321 | OUTPUT REACTOR | | | | | | | | | | | | | | | | E41428112-001-11 |
| 9W | SPACE | SPACE | | | | | | | | | | | | | | | | |
| 10A | SPACE | SPACE | | | | | | | | | | | | | | | | |
| 10C | SPACE | SPACE | | | | | | | | | | | | | | | | |
| 10E | SPACE | SPACE | | | | | | | | | | | | | | | | |
| 10I | P-03-630 | ATV930 | U40 | 5 | FU SW 30 | | CONTROL TRANSFORMER | 100 | .50 | 1.00 | | | RED PTT | | | HOA SS SPD POT | #16 AWG MTW CONTROL WIRE, CLASS J FUSE CLIPS, STD WIRE LABELS | E41428112-001-12 |
| | | | | | | | | | | | | | | | | | | |
| 10Q | ASD OUTPUT REACTOR FOR P-03-630 | OUTPUT REACTOR | | | | | | | | | | | | | | | | E41428112-001-12 |
| 10T | SPACE | SPACE | | | | | | | | | | | | | | | | |
| 11A | SPACE | SPACE | | | | | | | | | | | | | | | | |
| 11C | P-04-770 | 6" BRANCH SW | | | FU SW 30 | | | | | | | | | | | | 14-2AWG 1 LUG/PH, AL MECH LUG AL/CU CABLE, CLASS J FUSE CLIPS | E41428112-001-13 |
| | | | | | | | | | | | | | | | | | | |
| 11E | P-04-780 | 6" BRANCH SW | | | FU SW 30 | | | | | | | | | | | | 14-2AWG 1 LUG/PH, AL MECH LUG AL/CU CABLE, CLASS J FUSE CLIPS | E41428112-001-13 |
| | | | | | | | | | | | | | | | | | | |
| UNIT LOC | UNIT NAMEPLATES | UNIT TYPE | SIZE | HP | FRAME AMPS | TRIP AMPS | CONTROL SOURCE | VA | FUSE SIZE PRI | FUSE SIZE SEC | INTERLOCKS NO | INTERLOCKS NC | PILOT DEVICES: LED 22 mm ** ON LIGHT | PILOT DEVICES: LED 22 mm ** OFF LIGHT | PILOT DEVICES: LED 22 mm ** ADDL P/L | PILOT DEVICES: LED 22 mm ** SS / PB | OTHER UNIT FEATURES | ELEMENTARY # |

| | |
|---|---|
| JOB NAME: | IQALUIT WWTP MCC UPGRADES |
| JOB LOCATION: | SALABERRY-DE-VALLEYFIELD QC |
| DRAWN BY: | CAD |
| ENGR: | MLC |
| DATE: | MAY 21, 2019 |
| DRAWING STATUS: | APPROVAL |

| | |
|---|---|
| EQUIPMENT DESIGNATION: | MCC – 1 |
| EQUIPMENT TYPE: | MODEL 6 MOTOR CONTROL CENTER |
| DRAWING TYPE: | UNIT INFORMATION |

[redacted]

DWG# I41428112-001-01 | PG 4 OF 5 | REV C

| REV | DESCRIPTION | BY | DATE | | | | | | |
|---|---|---|---|---|---|---|---|---|---|
| B | REAPPROVAL | TA | 06/21/2019 | A | APPROVAL RESUBMIT | RN | 06/19/2019 | – | ---- | -- | --/--/-- |
| | | | | C | APPROVAL RESUBMITAL | MLC | 07/11/2019 | – | ---- | -- | --/--/-- |

| UNIT LOC | UNIT NAMEPLATES | UNIT TYPE | SIZE | HP | FRAME AMPS | TRIP AMPS | CONTROL SOURCE | VA | FUSE SIZE PRI | FUSE SIZE SEC | INTERLOCKS NO | INTERLOCKS NC | PILOT DEVICES: LED 22 mm ** ON LIGHT | PILOT DEVICES: LED 22 mm ** OFF LIGHT | PILOT DEVICES: LED 22 mm ** ADDL P/L | PILOT DEVICES: LED 22 mm ** SS / PB | OTHER UNIT FEATURES | ELEMENTARY # |
|---|---|---|---|---|---|---|---|---|---|---|---|---|---|---|---|---|---|---|
| 11G | P-04-790 | 6" BRANCH SW | | | FU SW 30 | | | | | | | | | | | | 14-2AWG 1 LUG/PH, AL MECH LUG AL/CU CABLE, CLASS J FUSE CLIPS | E41428112-001-13 |
| | | | | | | | | | | | | | | | | | | |
| 11I | SPACE | SPACE | | | | | | | | | | | | | | | | |
| 11M | SPACE | SPACE | | | | | | | | | | | | | | | | |
| 11Q | SPACE | SPACE | | | | | | | | | | | | | | | | |
| 11U | SPACE | SPACE | | | | | | | | | | | | | | | | |
| 12A | SPACE | SPACE | | | | | | | | | | | | | | | | |
| 12E | P-04-970 | 6" BRANCH SW | | | FU SW 30 | | | | | | | | | | | | 14-2AWG 1 LUG/PH, AL MECH LUG AL/CU CABLE, CLASS J FUSE CLIPS | E41428112-001-13 |
| | | | | | | | | | | | | | | | | | | |
| 12G | P-04-980 | 6" BRANCH SW | | | FU SW 30 | | | | | | | | | | | | 14-2AWG 1 LUG/PH, AL MECH LUG AL/CU CABLE, CLASS J FUSE CLIPS | E41428112-001-13 |
| | | | | | | | | | | | | | | | | | | |
| 12I | SPACE | SPACE | | | | | | | | | | | | | | | | |
| 12M | SPACE | SPACE | | | | | | | | | | | | | | | | |
| 12Q | SPACE | SPACE | | | | | | | | | | | | | | | | |
| 12U | SPACE | SPACE | | | | | | | | | | | | | | | | |
| | | | | | | | | | | | | | | | | | | |
| | | | | | | | | | | | | | | | | | | |
| | | | | | | | | | | | | | | | | | | |
| | | | | | | | | | | | | | | | | | | |
| | | | | | | | | | | | | | | | | | | |
| UNIT LOC | UNIT NAMEPLATES | UNIT TYPE | SIZE | HP | FRAME AMPS | TRIP AMPS | CONTROL SOURCE | VA | PRI FUSE SIZE | SEC FUSE SIZE | NO INTERLOCKS | NC INTERLOCKS | ON LIGHT PILOT DEVICES: LED 22 mm ** | OFF LIGHT PILOT DEVICES: LED 22 mm ** | ADDL P/L | SS / PB | OTHER UNIT FEATURES | ELEMENTARY # |

| | |
|---|---|
| JOB NAME: | IQALUIT WWTP MCC UPGRADES |
| JOB LOCATION: | SALABERRY-DE-VALLEYFIELD QC |
| DRAWN BY: | CAD |
| ENGR: | MLC |
| DATE: | MAY 21, 2019 |
| DRAWING STATUS: | APPROVAL |

| | |
|---|---|
| EQUIPMENT DESIGNATION: | MCC – 1 |
| EQUIPMENT TYPE: | MODEL 6 MOTOR CONTROL CENTER |
| DRAWING TYPE: | UNIT INFORMATION |

[redacted]

DWG# I41428112-001-01 | PG 5 OF 5 | REV C

| REV | DESCRIPTION | BY | DATE | B | REAPPROVAL | TA | 06/21/2019 |
|---|---|---|---|---|---|---|---|
| A | APPROVAL RESUBMIT | RN | 06/19/2019 | C | APPROVAL RESUBMITAL | MLC | 07/11/2019 |

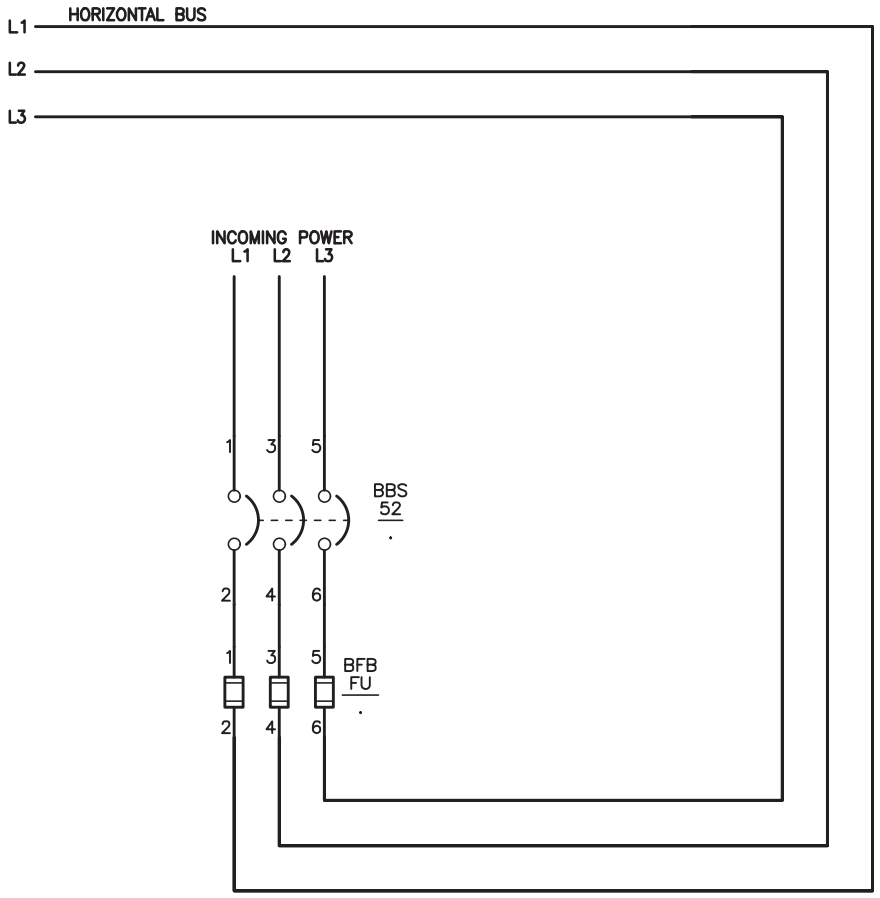


POWER FUSES NOT INCLUDED

| | | | |
|---|---|---|---|
| JOB NAME: | IQALUIT WWTP MCC UPGRADES | EQUIPMENT DESIGNATION: | MCC – 1 |
| JOB LOCATION: | SALABERRY–DE–VALLEYFIELD QC | EQUIPMENT TYPE: | MODEL 6 MOTOR CONTROL CENTER |
| DRAWN BY: | CAD | DRAWING TYPE: | ELEMENTARY |
| ENGR: | MLC | | SQUARE D by Schneider Electric |
| DATE: | MAY 21, 2019 | | |
| DRAWING STATUS: | APPROVAL | DWG# E41428112-001-01 | PG 1 OF 1 REV C |

| REV | DESCRIPTION | BY | DATE | B | REAPPROVAL | TA | 06/21/2019 |
|---|---|---|---|---|---|---|---|
| A | APPROVAL RESUBMIT | RN | 06/19/2019 | C | APPROVAL RESUBMITAL | MLC | 07/11/2019 |

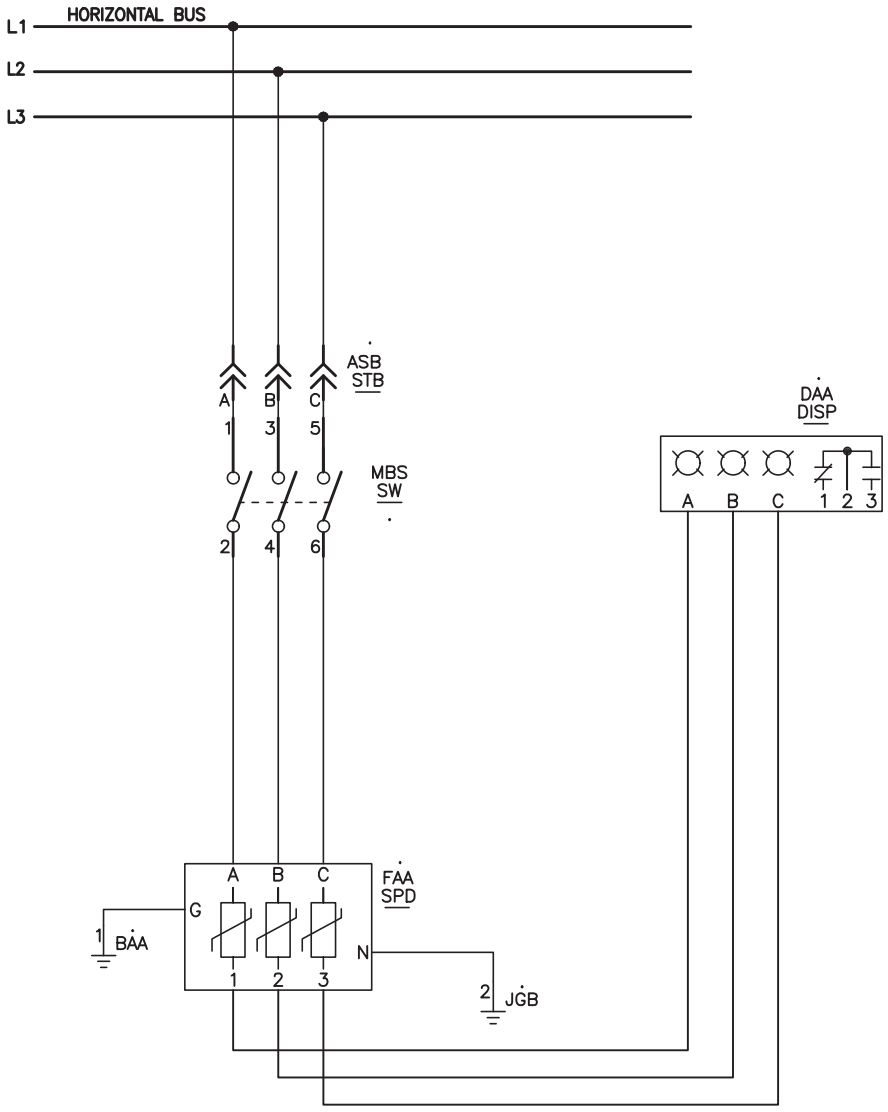


| | | | |
|---|---|---|---|
| JOB NAME: | IQALUIT WWTP MCC UPGRADES | EQUIPMENT DESIGNATION: | MCC – 1 |
| JOB LOCATION: | SALABERRY–DE–VALLEYFIELD QC | EQUIPMENT TYPE: | MODEL 6 MOTOR CONTROL CENTER |
| DRAWN BY: | CAD | DRAWING TYPE: | ELEMENTARY |
| ENGR: | MLC | | SQUARE D by Schneider Electric |
| DATE: | MAY 21, 2019 | | |
| DRAWING STATUS: | APPROVAL | DWG# E41428112–001–02 | PG 1 OF 1 REV C |

| REV | DESCRIPTION | BY | DATE | B | REAPPROVAL | TA | 06/21/2019 |
|---|---|---|---|---|---|---|---|
| A | APPROVAL RESUBMIT | RN | 06/19/2019 | C | APPROVAL RESUBMITAL | MLC | 07/11/2019 |

14M

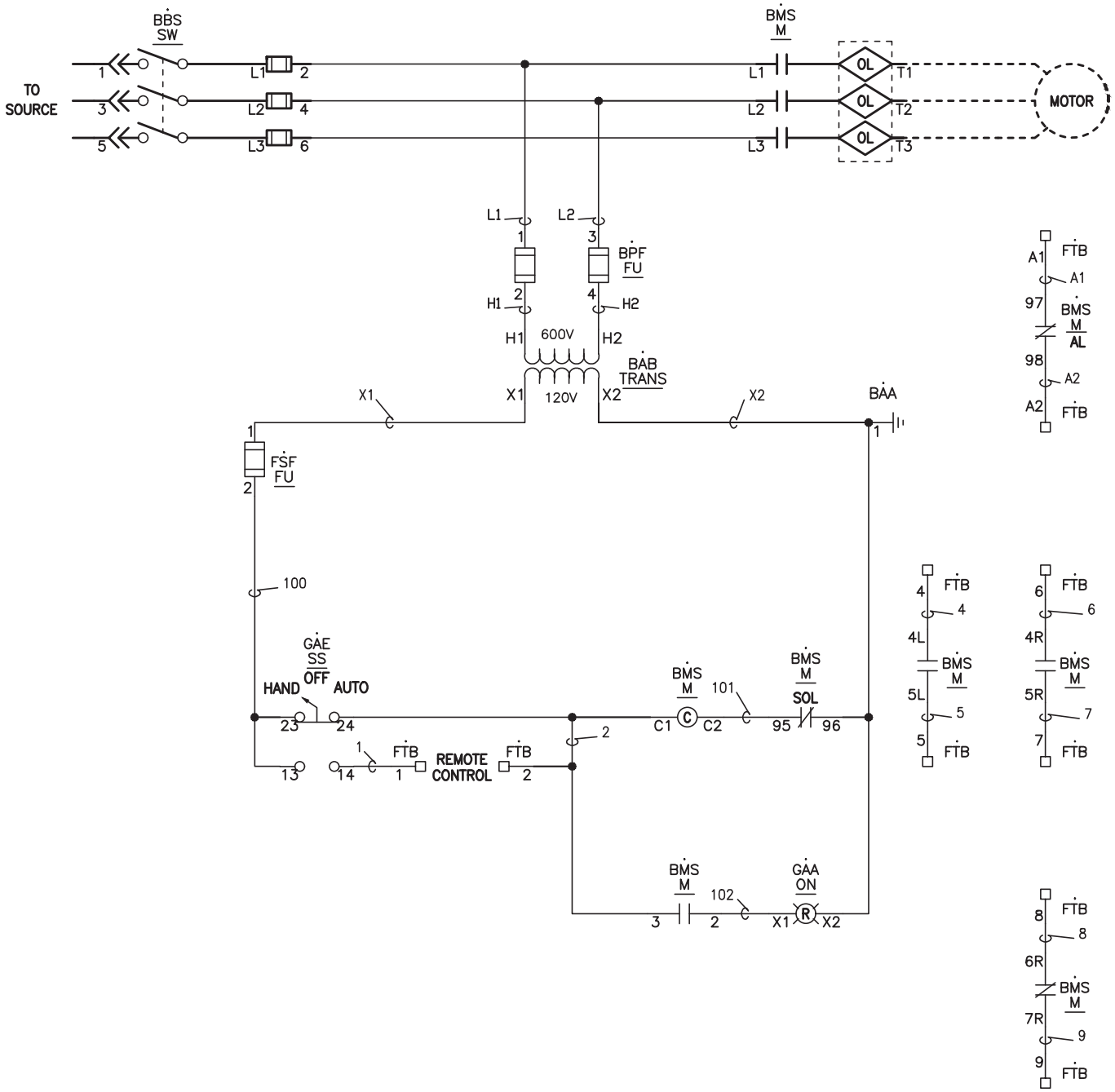


POWER FUSE NOT INCLUDED

HEAT SHRINK WIRE LABELS

| | | | |
|---|---|---|---|
| JOB NAME: | IQALUIT WWTP MCC UPGRADES | EQUIPMENT DESIGNATION: | MCC – 1 |
| JOB LOCATION: | SALABERRY–DE–VALLEYFIELD QC | EQUIPMENT TYPE: | MODEL 6 MOTOR CONTROL CENTER |
| DRAWN BY: | CAD | DRAWING TYPE: | ELEMENTARY |
| ENGR: | MLC | | SQUARE D by Schneider Electric |
| DATE: | MAY 21, 2019 | | |
| DRAWING STATUS: | APPROVAL | DWG# E41428112-001-03 | PG 1 OF 1 REV C |

| REV | DESCRIPTION | BY | DATE | | | | | | | |
|---|---|---|---|---|---|---|---|---|---|---|
| A | APPROVAL RESUBMIT | RN | 06/19/2019 | B | REAPPROVAL | TA | 06/21/2019 | - | ---- | -- --/--/-- |
| | | | | C | APPROVAL RESUBMITAL | MLC | 07/11/2019 | - | ---- | -- --/--/-- |

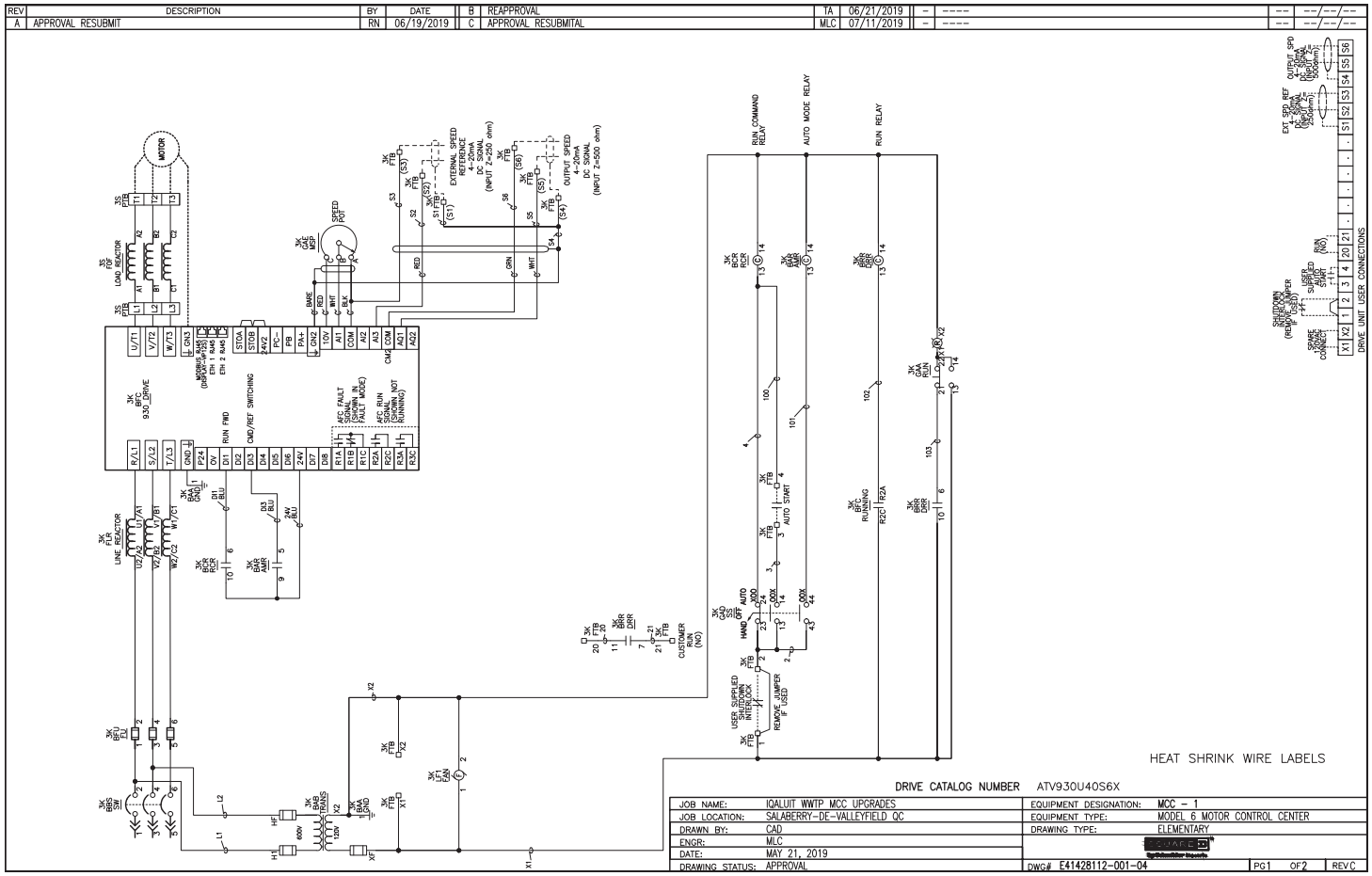

| REV | DESCRIPTION | BY | DATE | B | REAPPROVAL | TA | 06/21/2019 |
|---|---|---|---|---|---|---|---|
| A | APPROVAL RESUBMIT | RN | 06/19/2019 | C | APPROVAL RESUBMITAL | MLC | 07/11/2019 |

| ATV930 FACTORY CONFIGURATION – NORMAL DUTY – VARIATIONS FROM DEFAULT HOA | | | | | | |
|---|---|---|---|---|---|---|
| MENU | TAB | SUB–MENU | DESCRIPTION | SETTING | CODE | ADJ. |
| 1 | S.START | –––– | 2/3 WIRE CONTROL | 2C | TCC | 2C |
| 1 | S.START | –––– | BASIC FREQUENCY | 60Hz NEMA | BFR | 60 |
| 1 | S.START | –––– | MAX FREQUENCY | 60 | TFR | 60 |
| 1 | S.START | –––– | LOW SPEED | 3 | LSP | 3 |
| 1 | S.START | –––– | ACCELERATION | 10 | ACC | 10 |
| 1 | S.START | –––– | DECELERATION | 10 | DEC | 10 |
| 5.2 | ––– | SWITCHING FREQUENCY | SWITCHING FREQUENCY | 2.5 | SFR | 2.5 |
| 5.4 | ––– | –––– | REF FREQ 1 CONFIG | AI1 | FR1 | AI1 |
| 5.4 | ––– | –––– | FREQ SWITCH ASSIGN | DI3 | RFC | DI3 |
| 5.4 | ––– | –––– | 2–WIRE TYPE | LEVEL | TCT | LEL |
| 5.4 | ––– | –––– | REF FREQ 2 CONFIG | AI3 | FR2 | AI3 |
| 5.4 | ––– | CONTROL MODE | CONTROL MODE | CONTROL MODE I/O PROFILE | CHCF | IO |
| 5.4 | ––– | COMMAND SWITCHING | COMMAND SWITCHING | DI3 | CCS | DI3 |
| 5.4 | ––– | CMD CHANNEL 1 | CMD CHANNEL 1 | TERMINAL | CD1 | TER |
| 5.4 | ––– | CMD CHANNEL 2 | CMD CHANNEL 2 | TERMINAL | CD2 | TER |
| 5.14 | AI/AQ | AI3 CONFIGURATION | AI3 MIN VALUE | 4 | CLR3 | 4 |
| 5.14 | AI/AQ | AQ1 CONFIGURATION | AQ1 ASSIGNMENT | MOTOR FREQUENCY | AO1 | OFR |
| 5.14 | AI/AQ | AQ1 TYPE | AQ1 MIN OUTPUT | CURRENT | AO1T | 0A |
| 5.14 | AI/AQ | AQ1 CONFIGURATION | AQ1 MIN OUTPUT | 4 | AOL1 | 4 |
| 5.14 | RELAY | R1 CONFIGURATION | R1 ASSIGNMENT | OPERATING STATE | R1 | FLT |
| 5.14 | RELAY | R2 CONFIGURATION | R2 ASSIGNMENT | DRIVE RUNNING | R2 | RUN |
| 5.16 | ––– | CATCH ON THE FLY | CATCH ON THE FLY | YES | FLR | YES |

| | | | |
|---|---|---|---|
| JOB NAME: | IQALUIT WWTP MCC UPGRADES | EQUIPMENT DESIGNATION: | MCC – 1 |
| JOB LOCATION: | SALABERRY–DE–VALLEYFIELD QC | EQUIPMENT TYPE: | MODEL 6 MOTOR CONTROL CENTER |
| DRAWN BY: | CAD | DRAWING TYPE: | ELEMENTARY |
| ENGR: | MLC | | SQUARE D by Schneider Electric |
| DATE: | MAY 21, 2019 | | |
| DRAWING STATUS: | APPROVAL | DWG# E41428112–001–04 | PG 2 OF 2 REV C |

| REV | DESCRIPTION | BY | DATE | | | | | | | |
|---|---|---|---|---|---|---|---|---|---|---|
| A | APPROVAL RESUBMIT | RN | 06/19/2019 | B | REAPPROVAL | TA | 06/21/2019 | - | ---- | -- --/--/-- |
| | | | | C | APPROVAL RESUBMITAL | MLC | 07/11/2019 | - | ---- | -- --/--/-- |

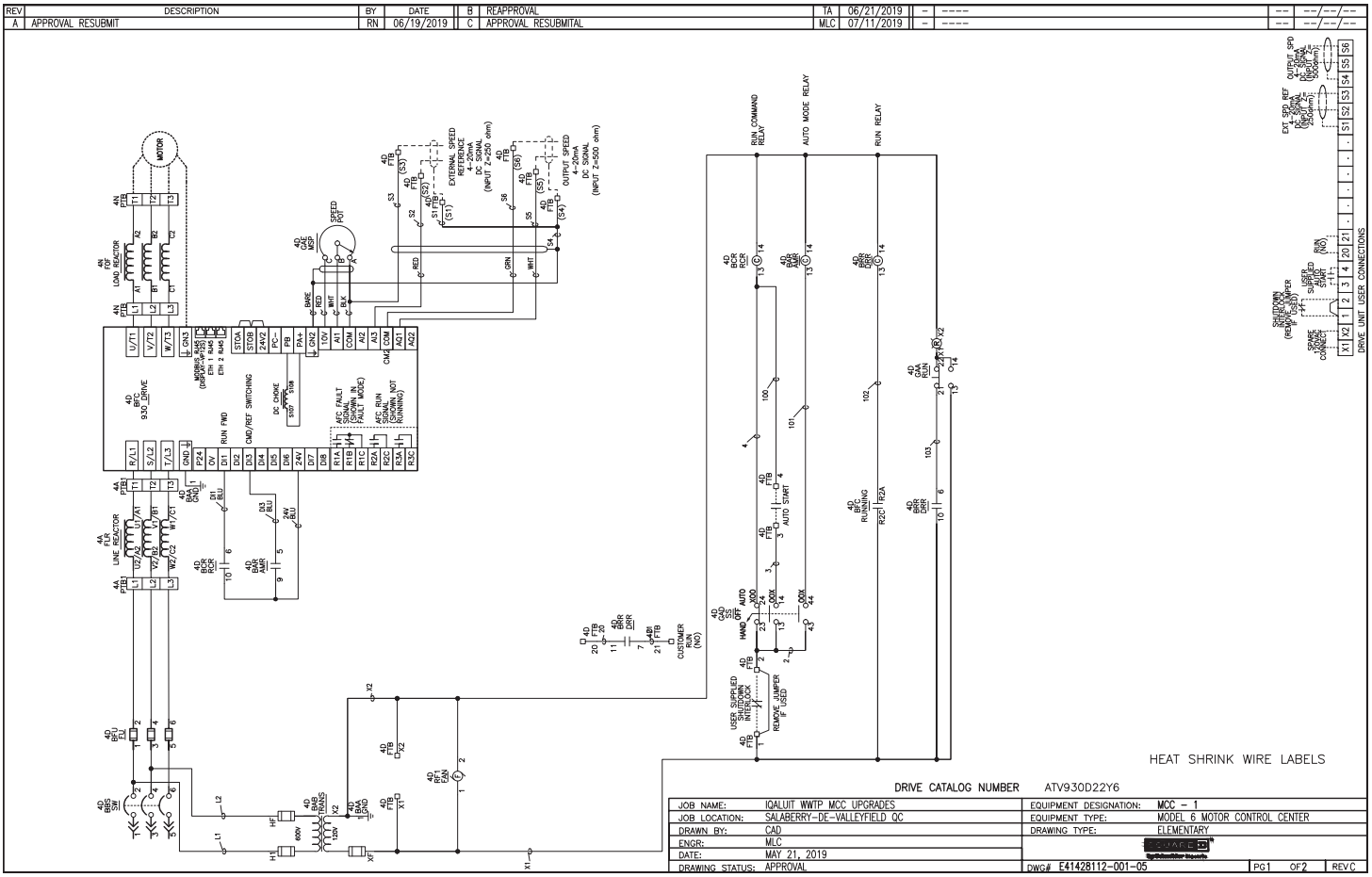


DRIVE CATALOG NUMBER ATV930D22Y6

| | | | |
|---|---|---|---|
| JOB NAME: | IQALUIT WWTP MCC UPGRADES | EQUIPMENT DESIGNATION: | MCC - 1 |
| JOB LOCATION: | SALABERRY-DE-VALLEYFIELD QC | EQUIPMENT TYPE: | MODEL 6 MOTOR CONTROL CENTER |
| DRAWN BY: | CAD | DRAWING TYPE: | ELEMENTARY |
| ENGR: | MLC | | |
| DATE: | MAY 21, 2019 | | |
| DRAWING STATUS: | APPROVAL | DWG# E41428112-001-05 | PG1 OF2 REV C |

| REV | DESCRIPTION | BY | DATE | B | REAPPROVAL | TA | 06/21/2019 |
|---|---|---|---|---|---|---|---|
| A | APPROVAL RESUBMIT | RN | 06/19/2019 | C | APPROVAL RESUBMITAL | MLC | 07/11/2019 |

| ATV930 FACTORY CONFIGURATION – NORMAL DUTY – VARIATIONS FROM DEFAULT HOA | | | | | | |
|---|---|---|---|---|---|---|
| MENU | TAB | SUB–MENU | DESCRIPTION | SETTING | CODE | ADJ. |
| 1 | S.START | –––– | 2/3 WIRE CONTROL | 2C | TCC | 2C |
| 1 | S.START | –––– | BASIC FREQUENCY | 60Hz NEMA | BFR | 60 |
| 1 | S.START | –––– | MAX FREQUENCY | 60 | TFR | 60 |
| 1 | S.START | –––– | LOW SPEED | 3 | LSP | 3 |
| 1 | S.START | –––– | ACCELERATION | 10 | ACC | 10 |
| 1 | S.START | –––– | DECELERATION | 10 | DEC | 10 |
| 5.2 | ––– | SWITCHING FREQUENCY | SWITCHING FREQUENCY | 2.5 | SFR | 2.5 |
| 5.4 | ––– | –––– | REF FREQ 1 CONFIG | AI1 | FR1 | AI1 |
| 5.4 | ––– | –––– | FREQ SWITCH ASSIGN | DI3 | RFC | DI3 |
| 5.4 | ––– | –––– | 2–WIRE TYPE | LEVEL | TCT | LEL |
| 5.4 | ––– | –––– | REF FREQ 2 CONFIG | AI3 | FR2 | AI3 |
| 5.4 | ––– | CONTROL MODE | CONTROL MODE | CONTROL MODE I/O PROFILE | CHCF | IO |
| 5.4 | ––– | COMMAND SWITCHING | COMMAND SWITCHING | DI3 | CCS | DI3 |
| 5.4 | ––– | CMD CHANNEL 1 | CMD CHANNEL 1 | TERMINAL | CD1 | TER |
| 5.4 | ––– | CMD CHANNEL 2 | CMD CHANNEL 2 | TERMINAL | CD2 | TER |
| 5.14 | AI/AQ | AI3 CONFIGURATION | AI3 MIN VALUE | 4 | CLR3 | 4 |
| 5.14 | AI/AQ | AQ1 CONFIGURATION | AQ1 ASSIGNMENT | MOTOR FREQUENCY | AO1 | OFR |
| 5.14 | AI/AQ | AQ1 TYPE | AQ1 MIN OUTPUT | CURRENT | AO1T | 0A |
| 5.14 | AI/AQ | AQ1 CONFIGURATION | AQ1 MIN OUTPUT | 4 | AOL1 | 4 |
| 5.14 | RELAY | R1 CONFIGURATION | R1 ASSIGNMENT | OPERATING STATE | R1 | FLT |
| 5.14 | RELAY | R2 CONFIGURATION | R2 ASSIGNMENT | DRIVE RUNNING | R2 | RUN |
| 5.16 | ––– | CATCH ON THE FLY | CATCH ON THE FLY | YES | FLR | YES |

| | | | |
|---|---|---|---|
| JOB NAME: | IQALUIT WWTP MCC UPGRADES | EQUIPMENT DESIGNATION: | MCC – 1 |
| JOB LOCATION: | SALABERRY–DE–VALLEYFIELD QC | EQUIPMENT TYPE: | MODEL 6 MOTOR CONTROL CENTER |
| DRAWN BY: | CAD | DRAWING TYPE: | ELEMENTARY |
| ENGR: | MLC | | SQUARE D by Schneider Electric |
| DATE: | MAY 21, 2019 | | |
| DRAWING STATUS: | APPROVAL | DWG# E41428112–001–05 | PG 2 OF 2 REV C |

| REV | DESCRIPTION | BY | DATE | | | | | | | |
|---|---|---|---|---|---|---|---|---|---|---|
| A | APPROVAL RESUBMIT | RN | 06/19/2019 | B | REAPPROVAL | TA | 06/21/2019 | - | ---- | -- --/--/-- |
| | | | | C | APPROVAL RESUBMITAL | MLC | 07/11/2019 | - | ---- | -- --/--/-- |

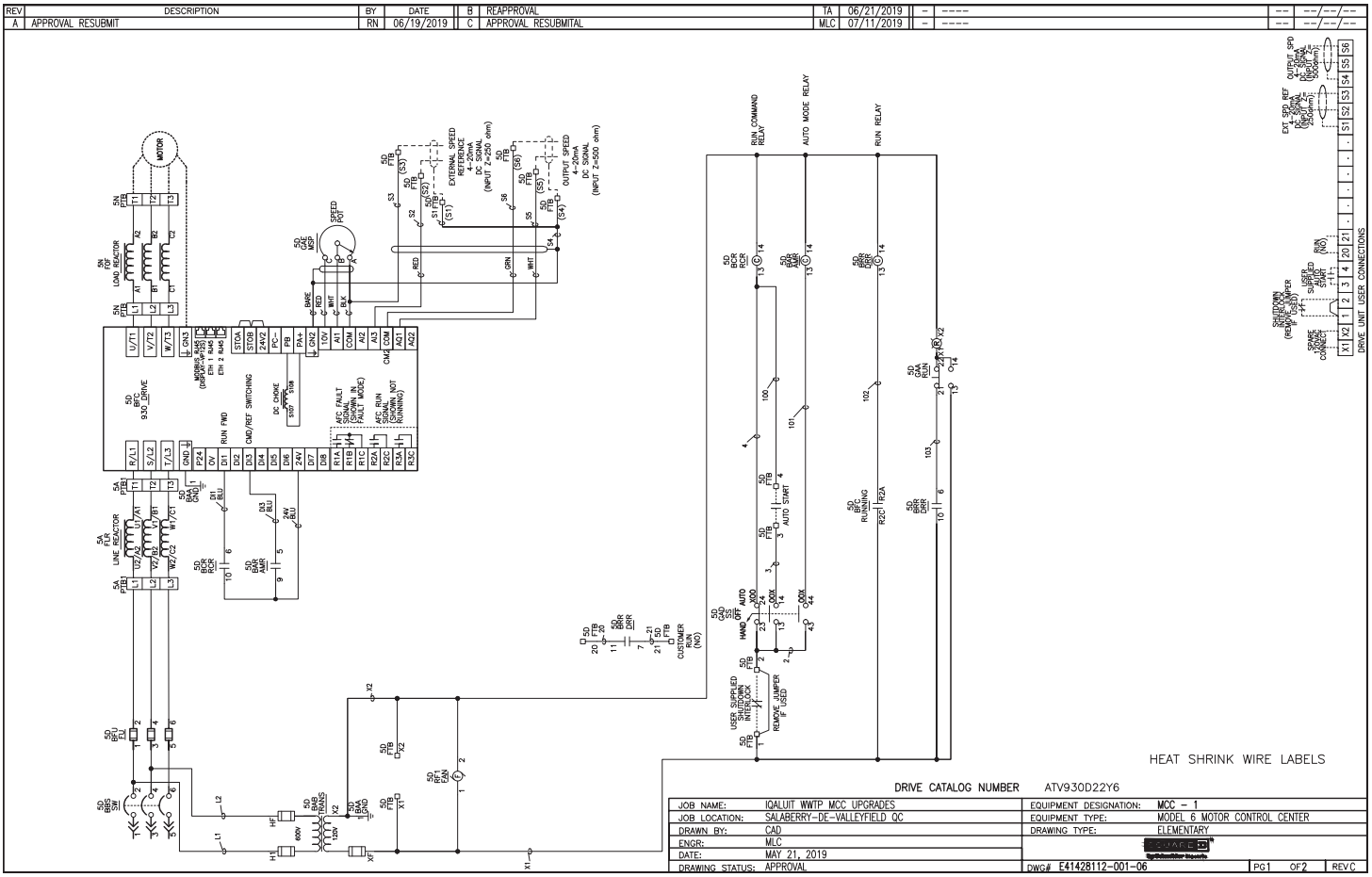


DRIVE CATALOG NUMBER ATV930D22Y6

| | | | |
|---|---|---|---|
| JOB NAME: | IQALUIT WWTP MCC UPGRADES | EQUIPMENT DESIGNATION: | MCC - 1 |
| JOB LOCATION: | SALABERRY-DE-VALLEYFIELD QC | EQUIPMENT TYPE: | MODEL 6 MOTOR CONTROL CENTER |
| DRAWN BY: | CAD | DRAWING TYPE: | ELEMENTARY |
| ENGR: | MLC | | |
| DATE: | MAY 21, 2019 | | |
| DRAWING STATUS: | APPROVAL | DWG# | E41428112-001-06 PG1 OF2 REV C |

| REV | DESCRIPTION | BY | DATE | B | REAPPROVAL | TA | 06/21/2019 |
|---|---|---|---|---|---|---|---|
| A | APPROVAL RESUBMIT | RN | 06/19/2019 | C | APPROVAL RESUBMITAL | MLC | 07/11/2019 |

| ATV930 FACTORY CONFIGURATION – NORMAL DUTY – VARIATIONS FROM DEFAULT HOA | | | | | | |
|---|---|---|---|---|---|---|
| MENU | TAB | SUB–MENU | DESCRIPTION | SETTING | CODE | ADJ. |
| 1 | S.START | –––– | 2/3 WIRE CONTROL | 2C | TCC | 2C |
| 1 | S.START | –––– | BASIC FREQUENCY | 60Hz NEMA | BFR | 60 |
| 1 | S.START | –––– | MAX FREQUENCY | 60 | TFR | 60 |
| 1 | S.START | –––– | LOW SPEED | 3 | LSP | 3 |
| 1 | S.START | –––– | ACCELERATION | 10 | ACC | 10 |
| 1 | S.START | –––– | DECELERATION | 10 | DEC | 10 |
| 5.2 | ––– | SWITCHING FREQUENCY | SWITCHING FREQUENCY | 2.5 | SFR | 2.5 |
| 5.4 | ––– | –––– | REF FREQ 1 CONFIG | AI1 | FR1 | AI1 |
| 5.4 | ––– | –––– | FREQ SWITCH ASSIGN | DI3 | RFC | DI3 |
| 5.4 | ––– | –––– | 2–WIRE TYPE | LEVEL | TCT | LEL |
| 5.4 | ––– | –––– | REF FREQ 2 CONFIG | AI3 | FR2 | AI3 |
| 5.4 | ––– | CONTROL MODE | CONTROL MODE | CONTROL MODE I/O PROFILE | CHCF | IO |
| 5.4 | ––– | COMMAND SWITCHING | COMMAND SWITCHING | DI3 | CCS | DI3 |
| 5.4 | ––– | CMD CHANNEL 1 | CMD CHANNEL 1 | TERMINAL | CD1 | TER |
| 5.4 | ––– | CMD CHANNEL 2 | CMD CHANNEL 2 | TERMINAL | CD2 | TER |
| 5.14 | AI/AQ | AI3 CONFIGURATION | AI3 MIN VALUE | 4 | CLR3 | 4 |
| 5.14 | AI/AQ | AQ1 CONFIGURATION | AQ1 ASSIGNMENT | MOTOR FREQUENCY | AO1 | OFR |
| 5.14 | AI/AQ | AQ1 TYPE | AQ1 MIN OUTPUT | CURRENT | AO1T | 0A |
| 5.14 | AI/AQ | AQ1 CONFIGURATION | AQ1 MIN OUTPUT | 4 | AOL1 | 4 |
| 5.14 | RELAY | R1 CONFIGURATION | R1 ASSIGNMENT | OPERATING STATE | R1 | FLT |
| 5.14 | RELAY | R2 CONFIGURATION | R2 ASSIGNMENT | DRIVE RUNNING | R2 | RUN |
| 5.16 | ––– | CATCH ON THE FLY | CATCH ON THE FLY | YES | FLR | YES |

| | | | |
|---|---|---|---|
| JOB NAME: | IQALUIT WWTP MCC UPGRADES | EQUIPMENT DESIGNATION: | MCC – 1 |
| JOB LOCATION: | SALABERRY–DE–VALLEYFIELD QC | EQUIPMENT TYPE: | MODEL 6 MOTOR CONTROL CENTER |
| DRAWN BY: | CAD | DRAWING TYPE: | ELEMENTARY |
| ENGR: | MLC | | SQUARE D by Schneider Electric |
| DATE: | MAY 21, 2019 | | |
| DRAWING STATUS: | APPROVAL | DWG# E41428112–001–06 | PG 2 OF 2 REV C |

| REV | DESCRIPTION | BY | DATE |
|---|---|---|---|
| A | APPROVAL RESUBMIT | RN | 06/19/2019 |
| B | REAPPROVAL | TA | 06/21/2019 |
| C | APPROVAL RESUBMITAL | MLC | 07/11/2019 |

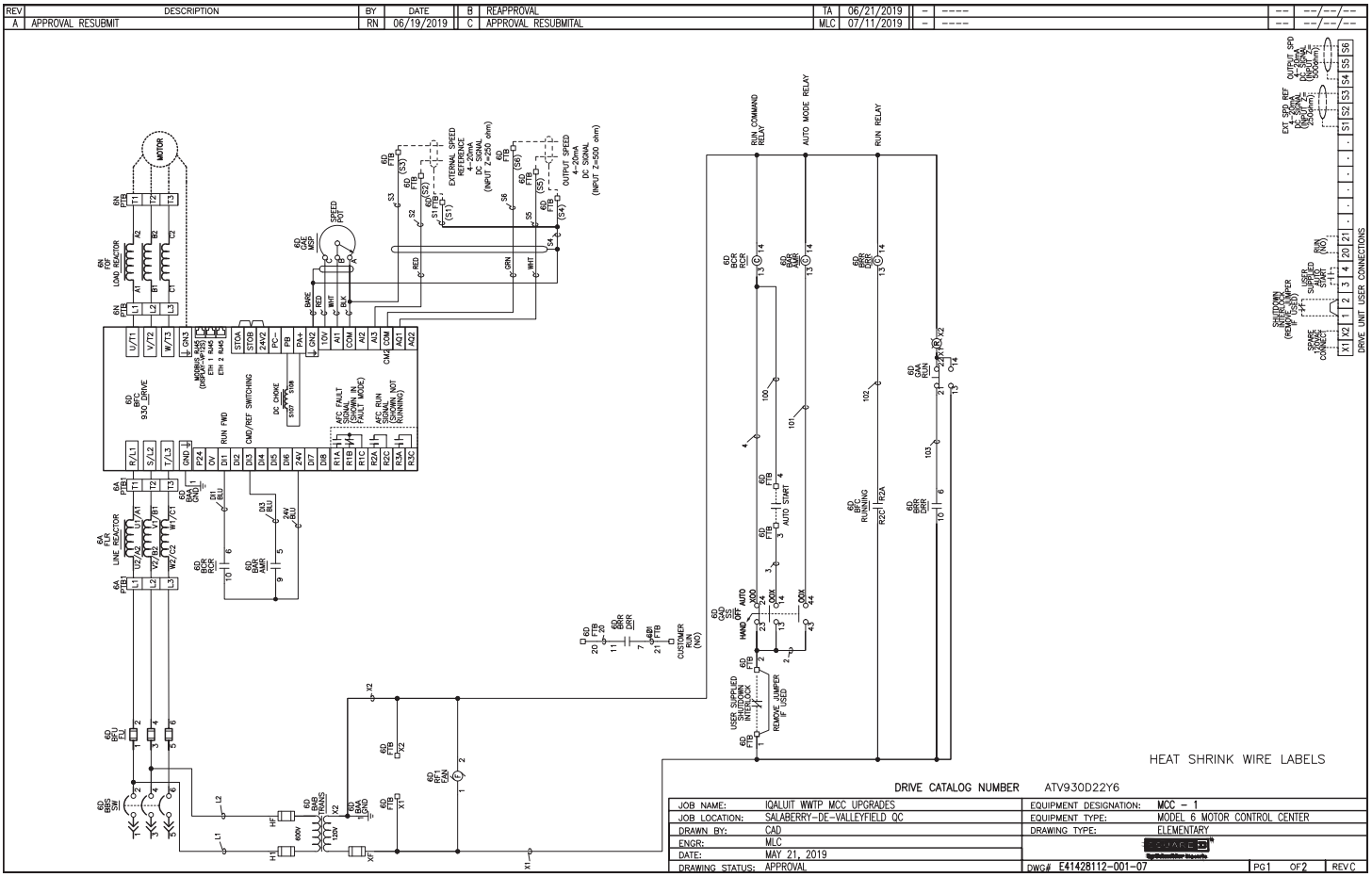


DRIVE CATALOG NUMBER ATV930D22Y6

| | | | |
|---|---|---|---|
| JOB NAME: | IQALUIT WWTP MCC UPGRADES | EQUIPMENT DESIGNATION: | MCC - 1 |
| JOB LOCATION: | SALABERRY-DE-VALLEYFIELD QC | EQUIPMENT TYPE: | MODEL 6 MOTOR CONTROL CENTER |
| DRAWN BY: | CAD | DRAWING TYPE: | ELEMENTARY |
| ENGR: | MLC | | |
| DATE: | MAY 21, 2019 | | |
| DRAWING STATUS: | APPROVAL | DWG# | E41428112-001-07 |

PG1 OF2 REV C

| REV | DESCRIPTION | BY | DATE | B | REAPPROVAL | TA | 06/21/2019 |
|---|---|---|---|---|---|---|---|
| A | APPROVAL RESUBMIT | RN | 06/19/2019 | C | APPROVAL RESUBMITAL | MLC | 07/11/2019 |

| ATV930 FACTORY CONFIGURATION – NORMAL DUTY – VARIATIONS FROM DEFAULT HOA | | | | | | |
|---|---|---|---|---|---|---|
| MENU | TAB | SUB–MENU | DESCRIPTION | SETTING | CODE | ADJ. |
| 1 | S.START | –––– | 2/3 WIRE CONTROL | 2C | TCC | 2C |
| 1 | S.START | –––– | BASIC FREQUENCY | 60Hz NEMA | BFR | 60 |
| 1 | S.START | –––– | MAX FREQUENCY | 60 | TFR | 60 |
| 1 | S.START | –––– | LOW SPEED | 3 | LSP | 3 |
| 1 | S.START | –––– | ACCELERATION | 10 | ACC | 10 |
| 1 | S.START | –––– | DECELERATION | 10 | DEC | 10 |
| 5.2 | ––– | SWITCHING FREQUENCY | SWITCHING FREQUENCY | 2.5 | SFR | 2.5 |
| 5.4 | ––– | –––– | REF FREQ 1 CONFIG | AI1 | FR1 | AI1 |
| 5.4 | ––– | –––– | FREQ SWITCH ASSIGN | DI3 | RFC | DI3 |
| 5.4 | ––– | –––– | 2–WIRE TYPE | LEVEL | TCT | LEL |
| 5.4 | ––– | –––– | REF FREQ 2 CONFIG | AI3 | FR2 | AI3 |
| 5.4 | ––– | CONTROL MODE | CONTROL MODE | CONTROL MODE I/O PROFILE | CHCF | IO |
| 5.4 | ––– | COMMAND SWITCHING | COMMAND SWITCHING | DI3 | CCS | DI3 |
| 5.4 | ––– | CMD CHANNEL 1 | CMD CHANNEL 1 | TERMINAL | CD1 | TER |
| 5.4 | ––– | CMD CHANNEL 2 | CMD CHANNEL 2 | TERMINAL | CD2 | TER |
| 5.14 | AI/AQ | AI3 CONFIGURATION | AI3 MIN VALUE | 4 | CLR3 | 4 |
| 5.14 | AI/AQ | AQ1 CONFIGURATION | AQ1 ASSIGNMENT | MOTOR FREQUENCY | AO1 | OFR |
| 5.14 | AI/AQ | AQ1 TYPE | AQ1 MIN OUTPUT | CURRENT | AO1T | 0A |
| 5.14 | AI/AQ | AQ1 CONFIGURATION | AQ1 MIN OUTPUT | 4 | AOL1 | 4 |
| 5.14 | RELAY | R1 CONFIGURATION | R1 ASSIGNMENT | OPERATING STATE | R1 | FLT |
| 5.14 | RELAY | R2 CONFIGURATION | R2 ASSIGNMENT | DRIVE RUNNING | R2 | RUN |
| 5.16 | ––– | CATCH ON THE FLY | CATCH ON THE FLY | YES | FLR | YES |

| | | | |
|---|---|---|---|
| JOB NAME: | IQALUIT WWTP MCC UPGRADES | EQUIPMENT DESIGNATION: | MCC – 1 |
| JOB LOCATION: | SALABERRY–DE–VALLEYFIELD QC | EQUIPMENT TYPE: | MODEL 6 MOTOR CONTROL CENTER |
| DRAWN BY: | CAD | DRAWING TYPE: | ELEMENTARY |
| ENGR: | MLC | | SQUARE D by Schneider Electric |
| DATE: | MAY 21, 2019 | | |
| DRAWING STATUS: | APPROVAL | DWG# E41428112–001–07 | PG 2 OF 2 REV C |

| REV | DESCRIPTION | BY | DATE | | | | | | | |
|---|---|---|---|---|---|---|---|---|---|---|
| A | APPROVAL RESUBMIT | RN | 06/19/2019 | B | REAPPROVAL | TA | 06/21/2019 | - | ---- | -- | --/--/-- |
| | | | | C | APPROVAL RESUBMITAL | MLC | 07/11/2019 | - | ---- | -- | --/--/-- |

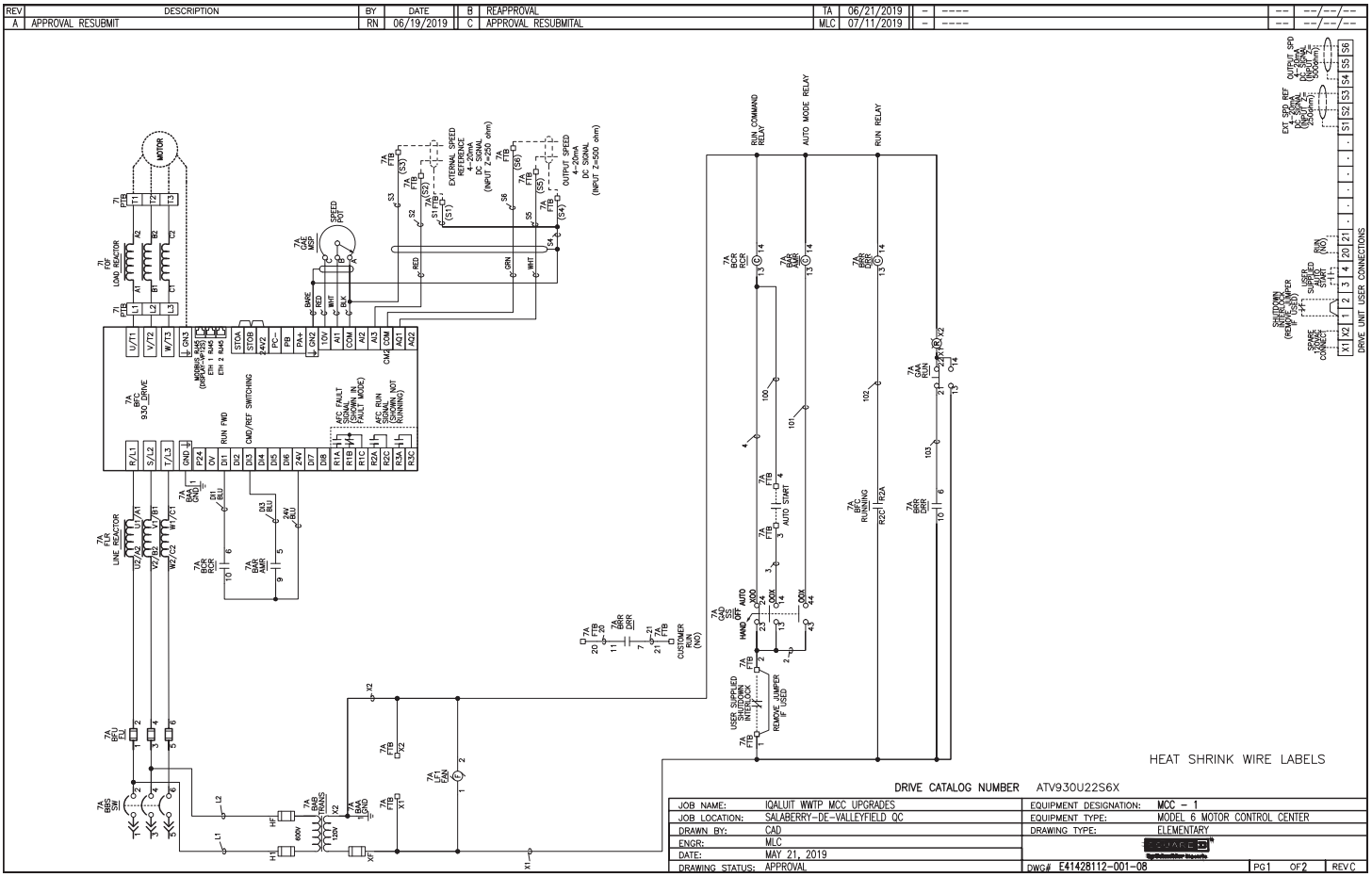

| REV | DESCRIPTION | BY | DATE | B | REAPPROVAL | TA | 06/21/2019 |
|---|---|---|---|---|---|---|---|
| A | APPROVAL RESUBMIT | RN | 06/19/2019 | C | APPROVAL RESUBMITAL | MLC | 07/11/2019 |

| ATV930 FACTORY CONFIGURATION – NORMAL DUTY – VARIATIONS FROM DEFAULT HOA | | | | | | |
|---|---|---|---|---|---|---|
| MENU | TAB | SUB–MENU | DESCRIPTION | SETTING | CODE | ADJ. |
| 1 | S.START | –––– | 2/3 WIRE CONTROL | 2C | TCC | 2C |
| 1 | S.START | –––– | BASIC FREQUENCY | 60Hz NEMA | BFR | 60 |
| 1 | S.START | –––– | MAX FREQUENCY | 60 | TFR | 60 |
| 1 | S.START | –––– | LOW SPEED | 3 | LSP | 3 |
| 1 | S.START | –––– | ACCELERATION | 10 | ACC | 10 |
| 1 | S.START | –––– | DECELERATION | 10 | DEC | 10 |
| 5.2 | ––– | SWITCHING FREQUENCY | SWITCHING FREQUENCY | 2.5 | SFR | 2.5 |
| 5.4 | ––– | –––– | REF FREQ 1 CONFIG | AI1 | FR1 | AI1 |
| 5.4 | ––– | –––– | FREQ SWITCH ASSIGN | DI3 | RFC | DI3 |
| 5.4 | ––– | –––– | 2–WIRE TYPE | LEVEL | TCT | LEL |
| 5.4 | ––– | –––– | REF FREQ 2 CONFIG | AI3 | FR2 | AI3 |
| 5.4 | ––– | CONTROL MODE | CONTROL MODE | CONTROL MODE I/O PROFILE | CHCF | IO |
| 5.4 | ––– | COMMAND SWITCHING | COMMAND SWITCHING | DI3 | CCS | DI3 |
| 5.4 | ––– | CMD CHANNEL 1 | CMD CHANNEL 1 | TERMINAL | CD1 | TER |
| 5.4 | ––– | CMD CHANNEL 2 | CMD CHANNEL 2 | TERMINAL | CD2 | TER |
| 5.14 | AI/AQ | AI3 CONFIGURATION | AI3 MIN VALUE | 4 | CLR3 | 4 |
| 5.14 | AI/AQ | AQ1 CONFIGURATION | AQ1 ASSIGNMENT | MOTOR FREQUENCY | AO1 | OFR |
| 5.14 | AI/AQ | AQ1 TYPE | AQ1 MIN OUTPUT | CURRENT | AO1T | 0A |
| 5.14 | AI/AQ | AQ1 CONFIGURATION | AQ1 MIN OUTPUT | 4 | AOL1 | 4 |
| 5.14 | RELAY | R1 CONFIGURATION | R1 ASSIGNMENT | OPERATING STATE | R1 | FLT |
| 5.14 | RELAY | R2 CONFIGURATION | R2 ASSIGNMENT | DRIVE RUNNING | R2 | RUN |
| 5.16 | ––– | CATCH ON THE FLY | CATCH ON THE FLY | YES | FLR | YES |

| | | | |
|---|---|---|---|
| JOB NAME: | IQALUIT WWTP MCC UPGRADES | EQUIPMENT DESIGNATION: | MCC – 1 |
| JOB LOCATION: | SALABERRY–DE–VALLEYFIELD QC | EQUIPMENT TYPE: | MODEL 6 MOTOR CONTROL CENTER |
| DRAWN BY: | CAD | DRAWING TYPE: | ELEMENTARY |
| ENGR: | MLC | | SQUARE D by Schneider Electric |
| DATE: | MAY 21, 2019 | | |
| DRAWING STATUS: | APPROVAL | DWG# E41428112–001–08 | PG 2 OF 2 REV C |

| REV | DESCRIPTION | BY | DATE | | | | | | | |
|---|---|---|---|---|---|---|---|---|---|---|
| A | APPROVAL RESUBMIT | RN | 06/19/2019 | B | REAPPROVAL | TA | 06/21/2019 | - | ---- | -- --/--/-- |
| | | | | C | APPROVAL RESUBMITAL | MLC | 07/11/2019 | - | ---- | -- --/--/-- |

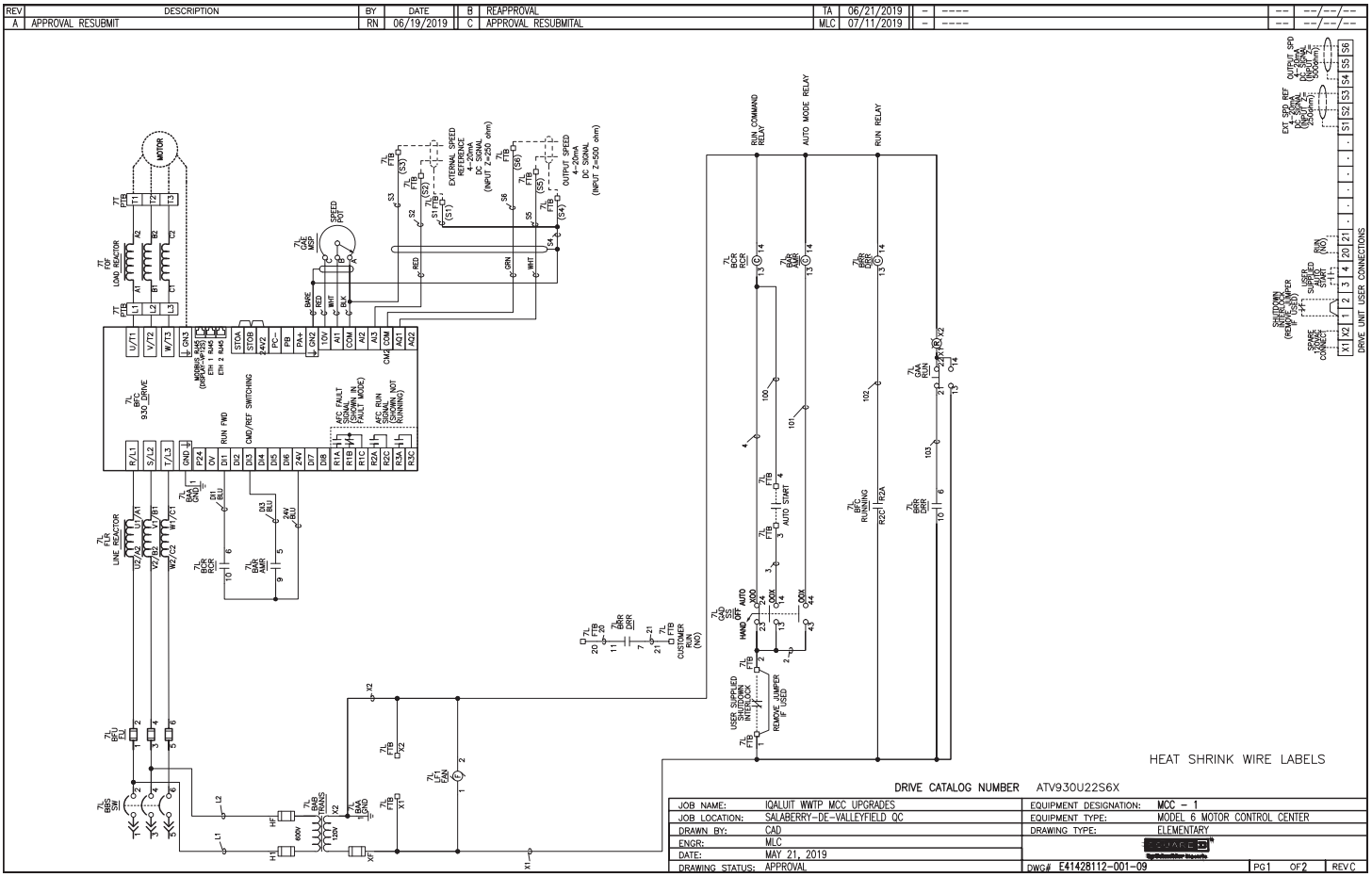

| REV | DESCRIPTION | BY | DATE | B | REAPPROVAL | TA | 06/21/2019 |
|---|---|---|---|---|---|---|---|
| A | APPROVAL RESUBMIT | RN | 06/19/2019 | C | APPROVAL RESUBMITAL | MLC | 07/11/2019 |

| ATV930 FACTORY CONFIGURATION – NORMAL DUTY – VARIATIONS FROM DEFAULT HOA | | | | | | |
|---|---|---|---|---|---|---|
| MENU | TAB | SUB–MENU | DESCRIPTION | SETTING | CODE | ADJ. |
| 1 | S.START | –––– | 2/3 WIRE CONTROL | 2C | TCC | 2C |
| 1 | S.START | –––– | BASIC FREQUENCY | 60Hz NEMA | BFR | 60 |
| 1 | S.START | –––– | MAX FREQUENCY | 60 | TFR | 60 |
| 1 | S.START | –––– | LOW SPEED | 3 | LSP | 3 |
| 1 | S.START | –––– | ACCELERATION | 10 | ACC | 10 |
| 1 | S.START | –––– | DECELERATION | 10 | DEC | 10 |
| 5.2 | ––– | SWITCHING FREQUENCY | SWITCHING FREQUENCY | 2.5 | SFR | 2.5 |
| 5.4 | ––– | –––– | REF FREQ 1 CONFIG | AI1 | FR1 | AI1 |
| 5.4 | ––– | –––– | FREQ SWITCH ASSIGN | DI3 | RFC | DI3 |
| 5.4 | ––– | –––– | 2–WIRE TYPE | LEVEL | TCT | LEL |
| 5.4 | ––– | –––– | REF FREQ 2 CONFIG | AI3 | FR2 | AI3 |
| 5.4 | ––– | CONTROL MODE | CONTROL MODE | CONTROL MODE I/O PROFILE | CHCF | IO |
| 5.4 | ––– | COMMAND SWITCHING | COMMAND SWITCHING | DI3 | CCS | DI3 |
| 5.4 | ––– | CMD CHANNEL 1 | CMD CHANNEL 1 | TERMINAL | CD1 | TER |
| 5.4 | ––– | CMD CHANNEL 2 | CMD CHANNEL 2 | TERMINAL | CD2 | TER |
| 5.14 | AI/AQ | AI3 CONFIGURATION | AI3 MIN VALUE | 4 | CLR3 | 4 |
| 5.14 | AI/AQ | AQ1 CONFIGURATION | AQ1 ASSIGNMENT | MOTOR FREQUENCY | AO1 | OFR |
| 5.14 | AI/AQ | AQ1 TYPE | AQ1 MIN OUTPUT | CURRENT | AO1T | 0A |
| 5.14 | AI/AQ | AQ1 CONFIGURATION | AQ1 MIN OUTPUT | 4 | AOL1 | 4 |
| 5.14 | RELAY | R1 CONFIGURATION | R1 ASSIGNMENT | OPERATING STATE | R1 | FLT |
| 5.14 | RELAY | R2 CONFIGURATION | R2 ASSIGNMENT | DRIVE RUNNING | R2 | RUN |
| 5.16 | ––– | CATCH ON THE FLY | CATCH ON THE FLY | YES | FLR | YES |

| | | | |
|---|---|---|---|
| JOB NAME: | IQALUIT WWTP MCC UPGRADES | EQUIPMENT DESIGNATION: | MCC – 1 |
| JOB LOCATION: | SALABERRY–DE–VALLEYFIELD QC | EQUIPMENT TYPE: | MODEL 6 MOTOR CONTROL CENTER |
| DRAWN BY: | CAD | DRAWING TYPE: | ELEMENTARY |
| ENGR: | MLC | | SQUARE D by Schneider Electric |
| DATE: | MAY 21, 2019 | | |
| DRAWING STATUS: | APPROVAL | DWG# E41428112–001–09 | PG 2 OF 2 REV C |

| REV | DESCRIPTION | BY | DATE | | | | | | | |
|---|---|---|---|---|---|---|---|---|---|---|
| A | APPROVAL RESUBMIT | RN | 06/19/2019 | B | REAPPROVAL | TA | 06/21/2019 | - | ---- | -- --/--/-- |
| | | | | C | APPROVAL RESUBMITAL | MLC | 07/11/2019 | - | ---- | -- --/--/-- |

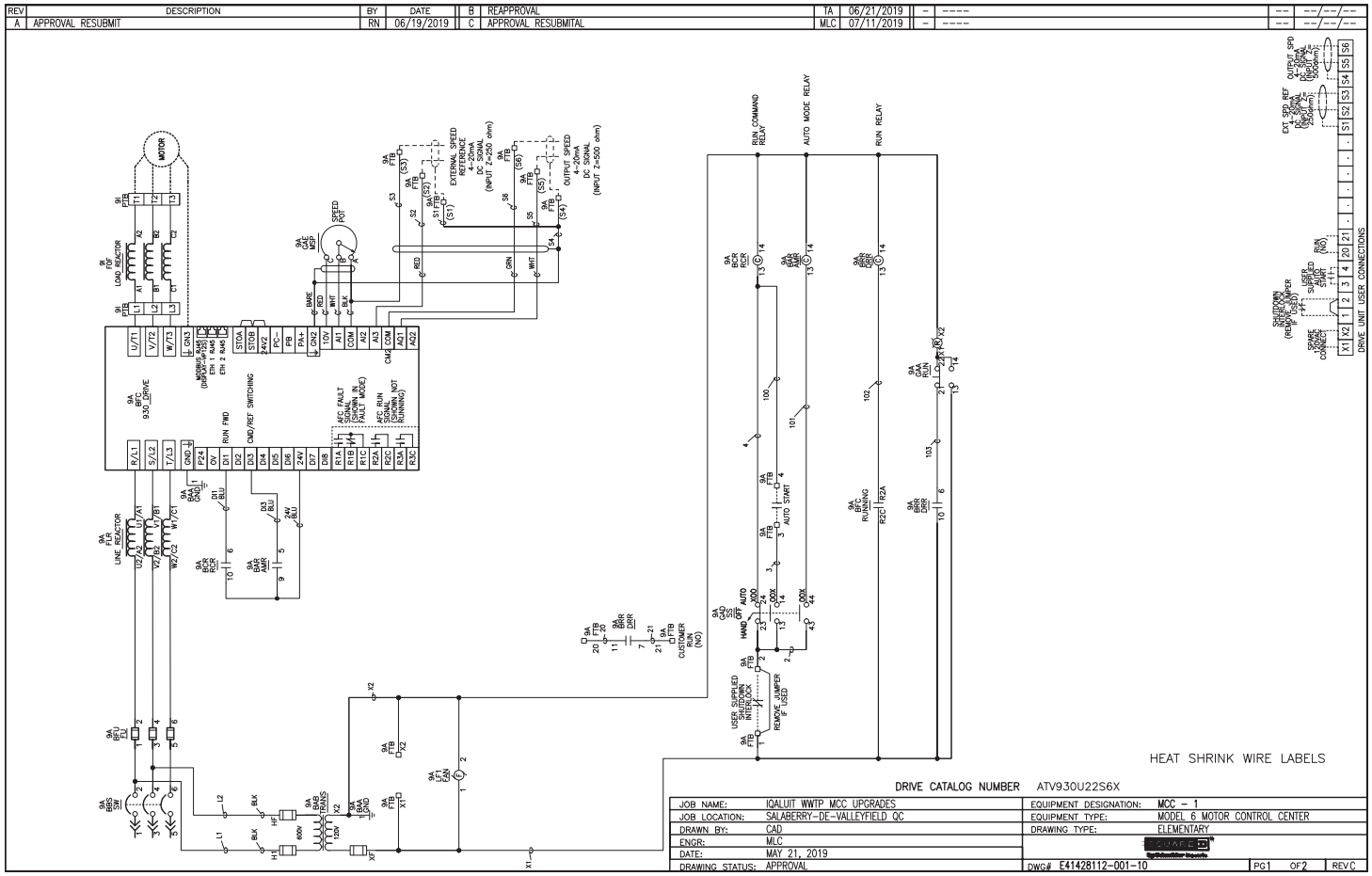
MOTOR
9A BFC 930_DRIVE
9A FLR LINE_REACTOR
9A LLR LOAD_REACTOR
9A BRR BRAKE
9A BAR AUXR
9A BCR RCR
9A BBR BRKR
9A BFR RUNR
9A BDR DRR
9A BAR BRKR
9A BAR AUXR
9A BAR CANR
9A BAR RUNR
9A BAR BRKR
9A BAR AUXR
9A BAR BRK

| REV | DESCRIPTION | BY | DATE | B | REAPPROVAL | TA | 06/21/2019 |
|---|---|---|---|---|---|---|---|
| A | APPROVAL RESUBMIT | RN | 06/19/2019 | C | APPROVAL RESUBMITAL | MLC | 07/11/2019 |

| ATV930 FACTORY CONFIGURATION – NORMAL DUTY – VARIATIONS FROM DEFAULT HOA | | | | | | |
|---|---|---|---|---|---|---|
| MENU | TAB | SUB–MENU | DESCRIPTION | SETTING | CODE | ADJ. |
| 1 | S.START | –––– | 2/3 WIRE CONTROL | 2C | TCC | 2C |
| 1 | S.START | –––– | BASIC FREQUENCY | 60Hz NEMA | BFR | 60 |
| 1 | S.START | –––– | MAX FREQUENCY | 60 | TFR | 60 |
| 1 | S.START | –––– | LOW SPEED | 3 | LSP | 3 |
| 1 | S.START | –––– | ACCELERATION | 10 | ACC | 10 |
| 1 | S.START | –––– | DECELERATION | 10 | DEC | 10 |
| 5.2 | ––– | SWITCHING FREQUENCY | SWITCHING FREQUENCY | 2.5 | SFR | 2.5 |
| 5.4 | ––– | –––– | REF FREQ 1 CONFIG | AI1 | FR1 | AI1 |
| 5.4 | ––– | –––– | FREQ SWITCH ASSIGN | DI3 | RFC | DI3 |
| 5.4 | ––– | –––– | 2–WIRE TYPE | LEVEL | TCT | LEL |
| 5.4 | ––– | –––– | REF FREQ 2 CONFIG | AI3 | FR2 | AI3 |
| 5.4 | ––– | CONTROL MODE | CONTROL MODE | CONTROL MODE I/O PROFILE | CHCF | IO |
| 5.4 | ––– | COMMAND SWITCHING | COMMAND SWITCHING | DI3 | CCS | DI3 |
| 5.4 | ––– | CMD CHANNEL 1 | CMD CHANNEL 1 | TERMINAL | CD1 | TER |
| 5.4 | ––– | CMD CHANNEL 2 | CMD CHANNEL 2 | TERMINAL | CD2 | TER |
| 5.14 | AI/AQ | AI3 CONFIGURATION | AI3 MIN VALUE | 4 | CLR3 | 4 |
| 5.14 | AI/AQ | AQ1 CONFIGURATION | AQ1 ASSIGNMENT | MOTOR FREQUENCY | AO1 | OFR |
| 5.14 | AI/AQ | AQ1 TYPE | AQ1 MIN OUTPUT | CURRENT | AO1T | 0A |
| 5.14 | AI/AQ | AQ1 CONFIGURATION | AQ1 MIN OUTPUT | 4 | AOL1 | 4 |
| 5.14 | RELAY | R1 CONFIGURATION | R1 ASSIGNMENT | OPERATING STATE | R1 | FLT |
| 5.14 | RELAY | R2 CONFIGURATION | R2 ASSIGNMENT | DRIVE RUNNING | R2 | RUN |
| 5.16 | ––– | CATCH ON THE FLY | CATCH ON THE FLY | YES | FLR | YES |

| | | | |
|---|---|---|---|
| JOB NAME: | IQALUIT WWTP MCC UPGRADES | EQUIPMENT DESIGNATION: | MCC – 1 |
| JOB LOCATION: | SALABERRY–DE–VALLEYFIELD QC | EQUIPMENT TYPE: | MODEL 6 MOTOR CONTROL CENTER |
| DRAWN BY: | CAD | DRAWING TYPE: | ELEMENTARY |
| ENGR: | MLC | | SQUARE D by Schneider Electric |
| DATE: | MAY 21, 2019 | | |
| DRAWING STATUS: | APPROVAL | DWG# E41428112–001–10 | PG 2 OF 2 REV C |

| REV | DESCRIPTION | BY | DATE | | | | | | | |
|---|---|---|---|---|---|---|---|---|---|---|
| A | APPROVAL RESUBMIT | RN | 06/19/2019 | B | REAPPROVAL | TA | 06/21/2019 | - | ---- | -- --/--/-- |
| | | | | C | APPROVAL RESUBMITAL | MLC | 07/11/2019 | - | ---- | -- --/--/-- |

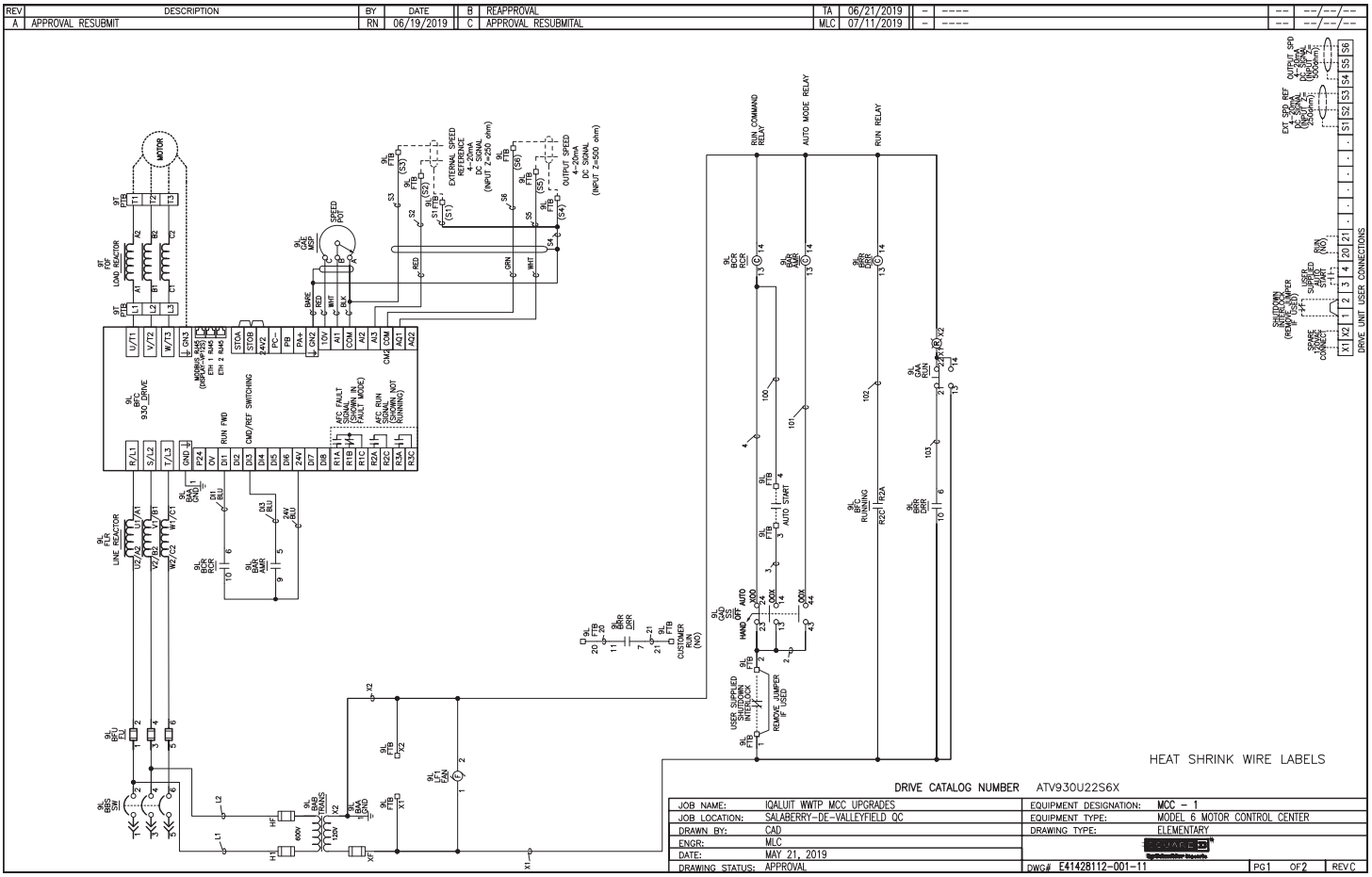

| REV | DESCRIPTION | BY | DATE | B | REAPPROVAL | TA | 06/21/2019 |
|---|---|---|---|---|---|---|---|
| A | APPROVAL RESUBMIT | RN | 06/19/2019 | C | APPROVAL RESUBMITAL | MLC | 07/11/2019 |

| ATV930 FACTORY CONFIGURATION – NORMAL DUTY – VARIATIONS FROM DEFAULT HOA | | | | | | |
|---|---|---|---|---|---|---|
| MENU | TAB | SUB–MENU | DESCRIPTION | SETTING | CODE | ADJ. |
| 1 | S.START | –––– | 2/3 WIRE CONTROL | 2C | TCC | 2C |
| 1 | S.START | –––– | BASIC FREQUENCY | 60Hz NEMA | BFR | 60 |
| 1 | S.START | –––– | MAX FREQUENCY | 60 | TFR | 60 |
| 1 | S.START | –––– | LOW SPEED | 3 | LSP | 3 |
| 1 | S.START | –––– | ACCELERATION | 10 | ACC | 10 |
| 1 | S.START | –––– | DECELERATION | 10 | DEC | 10 |
| 5.2 | ––– | SWITCHING FREQUENCY | SWITCHING FREQUENCY | 2.5 | SFR | 2.5 |
| 5.4 | ––– | –––– | REF FREQ 1 CONFIG | AI1 | FR1 | AI1 |
| 5.4 | ––– | –––– | FREQ SWITCH ASSIGN | DI3 | RFC | DI3 |
| 5.4 | ––– | –––– | 2–WIRE TYPE | LEVEL | TCT | LEL |
| 5.4 | ––– | –––– | REF FREQ 2 CONFIG | AI3 | FR2 | AI3 |
| 5.4 | ––– | CONTROL MODE | CONTROL MODE | CONTROL MODE I/O PROFILE | CHCF | IO |
| 5.4 | ––– | COMMAND SWITCHING | COMMAND SWITCHING | DI3 | CCS | DI3 |
| 5.4 | ––– | CMD CHANNEL 1 | CMD CHANNEL 1 | TERMINAL | CD1 | TER |
| 5.4 | ––– | CMD CHANNEL 2 | CMD CHANNEL 2 | TERMINAL | CD2 | TER |
| 5.14 | AI/AQ | AI3 CONFIGURATION | AI3 MIN VALUE | 4 | CLR3 | 4 |
| 5.14 | AI/AQ | AQ1 CONFIGURATION | AQ1 ASSIGNMENT | MOTOR FREQUENCY | AO1 | OFR |
| 5.14 | AI/AQ | AQ1 TYPE | AQ1 MIN OUTPUT | CURRENT | AO1T | 0A |
| 5.14 | AI/AQ | AQ1 CONFIGURATION | AQ1 MIN OUTPUT | 4 | AOL1 | 4 |
| 5.14 | RELAY | R1 CONFIGURATION | R1 ASSIGNMENT | OPERATING STATE | R1 | FLT |
| 5.14 | RELAY | R2 CONFIGURATION | R2 ASSIGNMENT | DRIVE RUNNING | R2 | RUN |
| 5.16 | ––– | CATCH ON THE FLY | CATCH ON THE FLY | YES | FLR | YES |

| | | | |
|---|---|---|---|
| JOB NAME: | IQALUIT WWTP MCC UPGRADES | EQUIPMENT DESIGNATION: | MCC – 1 |
| JOB LOCATION: | SALABERRY–DE–VALLEYFIELD QC | EQUIPMENT TYPE: | MODEL 6 MOTOR CONTROL CENTER |
| DRAWN BY: | CAD | DRAWING TYPE: | ELEMENTARY |
| ENGR: | MLC | | SQUARE D by Schneider Electric |
| DATE: | MAY 21, 2019 | | |
| DRAWING STATUS: | APPROVAL | DWG# E41428112–001–11 | PG 2 OF 2 REV C |

| REV | DESCRIPTION | BY | DATE | | | | | | | |
|---|---|---|---|---|---|---|---|---|---|---|
| A | APPROVAL RESUBMIT | RN | 06/19/2019 | B | REAPPROVAL | TA | 06/21/2019 | - | ---- | -- --/--/-- |
| | | | | C | APPROVAL RESUBMITAL | MLC | 07/11/2019 | - | ---- | -- --/--/-- |

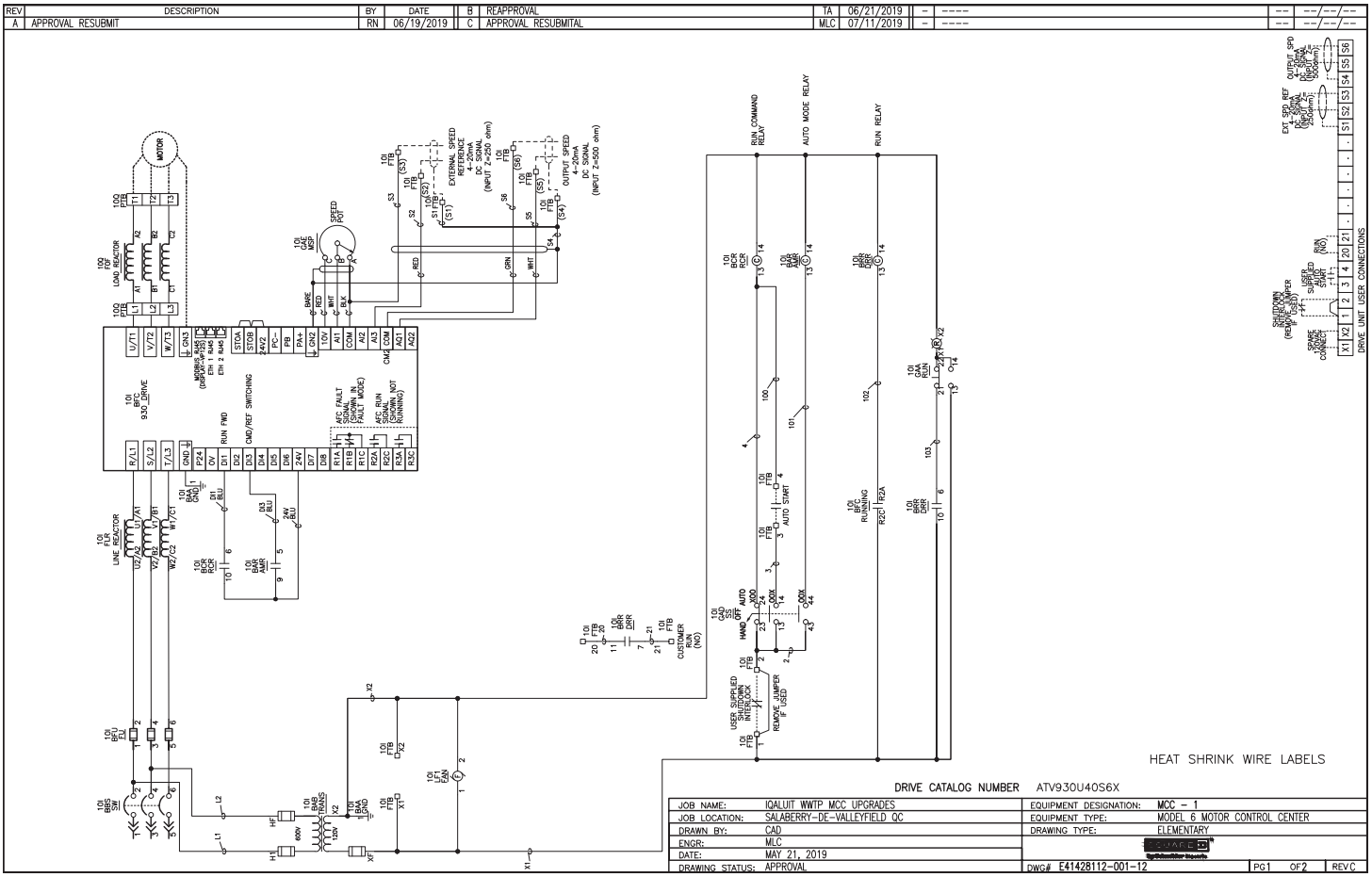

| REV | DESCRIPTION | BY | DATE | B | REAPPROVAL | TA | 06/21/2019 |
|---|---|---|---|---|---|---|---|
| A | APPROVAL RESUBMIT | RN | 06/19/2019 | C | APPROVAL RESUBMITAL | MLC | 07/11/2019 |

| ATV930 FACTORY CONFIGURATION – NORMAL DUTY – VARIATIONS FROM DEFAULT HOA | | | | | | |
|---|---|---|---|---|---|---|
| MENU | TAB | SUB–MENU | DESCRIPTION | SETTING | CODE | ADJ. |
| 1 | S.START | –––– | 2/3 WIRE CONTROL | 2C | TCC | 2C |
| 1 | S.START | –––– | BASIC FREQUENCY | 60Hz NEMA | BFR | 60 |
| 1 | S.START | –––– | MAX FREQUENCY | 60 | TFR | 60 |
| 1 | S.START | –––– | LOW SPEED | 3 | LSP | 3 |
| 1 | S.START | –––– | ACCELERATION | 10 | ACC | 10 |
| 1 | S.START | –––– | DECELERATION | 10 | DEC | 10 |
| 5.2 | ––– | SWITCHING FREQUENCY | SWITCHING FREQUENCY | 2.5 | SFR | 2.5 |
| 5.4 | ––– | –––– | REF FREQ 1 CONFIG | AI1 | FR1 | AI1 |
| 5.4 | ––– | –––– | FREQ SWITCH ASSIGN | DI3 | RFC | DI3 |
| 5.4 | ––– | –––– | 2–WIRE TYPE | LEVEL | TCT | LEL |
| 5.4 | ––– | –––– | REF FREQ 2 CONFIG | AI3 | FR2 | AI3 |
| 5.4 | ––– | CONTROL MODE | CONTROL MODE | CONTROL MODE I/O PROFILE | CHCF | IO |
| 5.4 | ––– | COMMAND SWITCHING | COMMAND SWITCHING | DI3 | CCS | DI3 |
| 5.4 | ––– | CMD CHANNEL 1 | CMD CHANNEL 1 | TERMINAL | CD1 | TER |
| 5.4 | ––– | CMD CHANNEL 2 | CMD CHANNEL 2 | TERMINAL | CD2 | TER |
| 5.14 | AI/AQ | AI3 CONFIGURATION | AI3 MIN VALUE | 4 | CLR3 | 4 |
| 5.14 | AI/AQ | AQ1 CONFIGURATION | AQ1 ASSIGNMENT | MOTOR FREQUENCY | AO1 | OFR |
| 5.14 | AI/AQ | AQ1 TYPE | AQ1 MIN OUTPUT | CURRENT | AO1T | 0A |
| 5.14 | AI/AQ | AQ1 CONFIGURATION | AQ1 MIN OUTPUT | 4 | AOL1 | 4 |
| 5.14 | RELAY | R1 CONFIGURATION | R1 ASSIGNMENT | OPERATING STATE | R1 | FLT |
| 5.14 | RELAY | R2 CONFIGURATION | R2 ASSIGNMENT | DRIVE RUNNING | R2 | RUN |
| 5.16 | ––– | CATCH ON THE FLY | CATCH ON THE FLY | YES | FLR | YES |

| | | | |
|---|---|---|---|
| JOB NAME: | IQALUIT WWTP MCC UPGRADES | EQUIPMENT DESIGNATION: | MCC – 1 |
| JOB LOCATION: | SALABERRY–DE–VALLEYFIELD QC | EQUIPMENT TYPE: | MODEL 6 MOTOR CONTROL CENTER |
| DRAWN BY: | CAD | DRAWING TYPE: | ELEMENTARY |
| ENGR: | MLC | | SQUARE D by Schneider Electric |
| DATE: | MAY 21, 2019 | | |
| DRAWING STATUS: | APPROVAL | DWG# E41428112–001–12 | PG 2 OF 2 REV C |

| REV | DESCRIPTION | BY | DATE | | | | |
|---|---|---|---|---|---|---|---|
| A | APPROVAL RESUBMIT | RN | 06/19/2019 | B | REAPPROVAL | TA | 06/21/2019 |
| | | | | C | APPROVAL RESUBMITAL | MLC | 07/11/2019 |

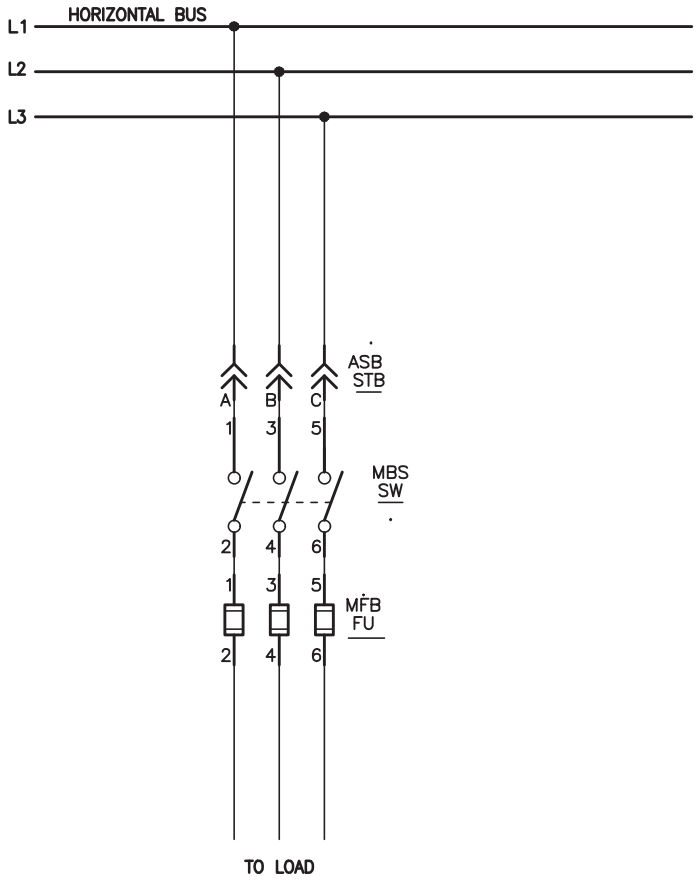


POWER FUSES NOT INCLUDED

| | | | |
|---|---|---|---|
| JOB NAME: | IQALUIT WWTP MCC UPGRADES | EQUIPMENT DESIGNATION: | MCC – 1 |
| JOB LOCATION: | SALABERRY–DE–VALLEYFIELD QC | EQUIPMENT TYPE: | MODEL 6 MOTOR CONTROL CENTER |
| DRAWN BY: | CAD | DRAWING TYPE: | ELEMENTARY |
| ENGR: | MLC | | SQUARE D by Schneider Electric |
| DATE: | MAY 21, 2019 | | |
| DRAWING STATUS: | APPROVAL | DWG# E41428112–001–13 | PG 1 OF 1 REV C |

REVIEWED BY CONTRACTOR
Kudlik Construction Ltd.
NAME: Sandra Rousseau P.Eng
DATE: Fév 04, 2019

VEOLIA

# SHOP DRAWINGS

**Network Architecture**

Date : 2019-02-04

| General Information | | | |
|---|---|---|---|
| Project | WWTP UPGRADE - IQALUIT | | |
| Client: | Kudlik Construction Ltd. | Project Number | 2018-062 |
| To: | Sandra Rousseau P.Eng., Project Manger | E-mail: | srousseau@kudlik.biz |
| Contractor | Veolia Water Technologies Canad Inc. | Project Number | 5000218036 |
| Address | 4105 Sartelon, Ville St. Laurent PQ, H4S 2B3 | | |
| Project Manger: | Clément Bekaert | E-mail: | clement.bekaert@veolia.com |
| Phone: | 514-334-7230 x 3243 | Cell: | 514-246-6232 |

| Information on the Equipment | | | |
|---|---|---|---|
| Specialty: | Electrical / automation | | |
| Equipment: | Control panel(s) Spidflow | | |
| Drawing Reference: | | | |
| Specification reference: | 46.71.24 | | |
| Article: | | | |
| Revision: | Rev01 | | |
| Titre: | Main Panel Electrical Drawings | | |
| Numero client: | DA-Veolia-ED-01-Main Panel | | |
| Numero Veolia | 5000218036_EPL_0001_AU_VWT | | |
| Envoyer pour: | Approbation/Information: | Approbation | |

**Consultant Approval**

Ensure there is space within LCP-02-300 for the ten digital input signals to be pulled to CPL-901's PLC as shown on P&IDs (P611 & P613). These signals are:

XA-02-310
YI-02-310
LAL-02-333
LAH-02-330
LAH-02-332
XA-02-320
YI-02-320
LAL-02-343
LAH-02-342
LAH-02-340

SHOP DRAWINGS ARE REVIEWED UNLESS NOTED OTHERWISE
REVIEWED AS MODIFIED [X]
REVISE & RESUBMIT [ ]
SEAL & SIGNATURE REQUIRED [ ]
Stantec
DATE March 6/19
SIGNATURE Ellie Brun
REVIEW BY STANTEC IS FOR THE SOLE PURPOSE OF ASCERTAINING GENERAL CONFORMITY WITH DESIGN. CONTRACTOR IS RESPONSIBLE FOR DIMENSIONS, FABRICATION AND CONSTRUCTION METHODS, COORDINATION OF SUB-TRADES, DETAIL DESIGN OF COMPONENTS AND ERRORS OR OMISSIONS ON SHOP DRAWINGS.

4105 Sartelon
Ville St. Laurent, PQ
H4S-2B3

Phone: 514-334-7230
Fax: 514-334-5070
www.veoliawatertechnologies.ca

# WWTP UPGRADE
# IQALUIT - WASTE WATER PROJECT
# CONTROL PANEL LCP-02-300
# PROJET #5000218036

Jan 29, 2019 16:26:52 - G:\Projets A67XX\A6798A - VEOLIA - 5000218036 Iqaluit WWTP Upgrade\DOC\DESSIN\000-DRAWINGS\LCP-02-300\REV 1\5000218036-EPL-0001-AU-VWT-001.dwg - rasiarn

STD: "B" 11x17 REF: A6798A BAR = 1" AT PLOT SCALE

| REV | DESCRIPTION | DATE | REVD | CHKD | APVD | ECN |
|---|---|---|---|---|---|---|
| 1 | FOR APPROVAL | 2019-01-03 | RA | HZ | – | – |

CONFIDENTIALITY AND INTELLECTUAL PROPERTY NOTICE
ALL INFORMATION CONTAINED IN THIS DOCUMENT IS THE SOLE PROPERTY OF VEOLIA WATER TECHNOLOGIES CANADA INC. AND IS PROTECTED BY COPYRIGHT, PATENT AND/OR OTHER INTELLECTUAL PROPERTY LAWS. THE DESIGN CONCEPTS AND INFORMATION CONTAINED HEREIN ARE PROPRIETARY TO V.W.T. AND ARE SUBMITTED IN CONFIDENCE. THEY ARE NOT TRANSFERABLE, THEY MUST BE USED ONLY FOR THE PURPOSE FOR WHICH THE DOCUMENT IS EXPRESSLY SUBMITTED AND NO RIGHTS ARE GRANTED BY CONVEYING, RECEIVING OR POSSESSING THIS DOCUMENT. THEY ARE CONFIDENTIAL AND PRIVILEGED INFORMATION OF V.W.T. AND THEY MUST NOT BE DISCLOSED, REPRODUCED, LOANED, PRINTED OR USED IN ANY OTHER MANNER WITHOUT THE EXPRESS WRITTEN CONSENT OF V.W.T. V.W.T. ASSUMES NO RESPONSIBILITY OR LIABILITY FOR THE USE OF THIS DOCUMENT OR THE DESIGN CONCEPTS AND INFORMATION CONTAINED HEREIN FOR PURPOSES OTHER THAN THE SPECIFIC PROJECT RELATED TO THE INTENDED PURPOSE OF THIS DOCUMENT. IN NO EVENT SHALL THIS DOCUMENT OR THE DESIGN CONCEPTS AND INFORMATION CONTAINED HEREIN BE USED IN A MANNER DETRIMENTAL TO THE INTEREST OF V.W.T. ALL COPYRIGHT, PATENT AND OTHER INTELLECTUAL PROPERTY RIGHTS ARE RESERVED. ACCEPTANCE OF THE DELIVERY OF THIS DOCUMENT CONSTITUTES AGREEMENT TO THESE TERMS AND CONDITIONS.

| | | DATE |
|---|---|---|
| DESIGNER | – | – |
| CHECKER | – | – |
| ENGINEER | – | – |
| SCALE: | N/A | |

TITLE: CONTROL PANEL LCP-02-300
TITLE PAGE

CLIENT: WWTP UPGRADE
CITY OF IQALUIT

VEOLIA
VEOLIA WATER TECHNOLOGIES CANADA INC. 4105 Sartelon, Saint-Laurent, Qc, Canada, H4J 0S4 (514) 334-7230

| PROJECT | DRAWING | INTERNAL | SHEET | REV |
|---|---|---|---|---|
| 5000218036-EPL – 0001-AU-VWT | | – | 01 OF 06 | 1 |

| DESCRIPTION | DRAWING NUMBER |
|---|---|
| MAIN CONTROL PANEL LCP-02-300 | |
| TITLE PAGE | 5000218036-EPL-0001-AU-VWT-001 |
| LEGEND & DRAWING LIST | 5000218036-EPL-0001-AU-VWT-002 |
| EXTERNAL LAYOUT | 5000218036-EPL-0001-AU-VWT-003 |
| INTERNAL LAYOUT | 5000218036-EPL-0001-AU-VWT-004 |
| TERMINAL LAYOUT | 5000218036-EPL-0001-AU-VWT-005 |
| BILL OF MATERIAL | 5000218036-EPL-0001-AU-VWT-006 |
| | |
| ELECTRICAL SCHEMATICS | 5000218036-ELD-0001-AU-VWT-001 |
| ELECTRICAL SCHEMATICS | 5000218036-ELD-0001-AU-VWT-002 |
| ELECTRICAL SCHEMATICS | 5000218036-ELD-0001-AU-VWT-003 |
| ELECTRICAL SCHEMATICS | 5000218036-ELD-0001-AU-VWT-004 |
| ELECTRICAL SCHEMATICS | 5000218036-ELD-0001-AU-VWT-005 |
| ELECTRICAL SCHEMATICS | 5000218036-ELD-0001-AU-VWT-006 |
| ELECTRICAL SCHEMATICS | 5000218036-ELD-0001-AU-VWT-007 |
| ELECTRICAL SCHEMATICS | 5000218036-ELD-0001-AU-VWT-008 |
| ELECTRICAL SCHEMATICS | 5000218036-ELD-0001-AU-VWT-009 |
| ELECTRICAL SCHEMATICS | 5000218036-ELD-0001-AU-VWT-010 |
| ELECTRICAL SCHEMATICS | 5000218036-ELD-0001-AU-VWT-011 |
| ELECTRICAL SCHEMATICS | 5000218036-ELD-0001-AU-VWT-012 |
| ELECTRICAL SCHEMATICS | 5000218036-ELD-0001-AU-VWT-013 |
| ELECTRICAL SCHEMATICS | 5000218036-ELD-0001-AU-VWT-014 |
| ELECTRICAL SCHEMATICS | 5000218036-ELD-0001-AU-VWT-015 |
| ELECTRICAL SCHEMATICS | 5000218036-ELD-0001-AU-VWT-016 |
| ELECTRICAL SCHEMATICS | 5000218036-ELD-0001-AU-VWT-017 |
| ELECTRICAL SCHEMATICS | 5000218036-ELD-0001-AU-VWT-018 |
| ELECTRICAL SCHEMATICS | 5000218036-ELD-0001-AU-VWT-019 |
| ELECTRICAL SCHEMATICS | 5000218036-ELD-0001-AU-VWT-020 |
| ELECTRICAL SCHEMATICS | 5000218036-ELD-0001-AU-VWT-021 |

## LEGEND

- LOW PRESSURE
- HIGH PRESSURE
- LOW LEVEL
- HIGH LEVEL
- LIMIT SWITCH
- LIMIT SWITCH
- LOW FLOW
- HIGH FLOW
- RELAY CONTACT
- RELAY CONTACT
- RELAY CONTACT
- ON DELAY TIMER
- OFF DELAY TIMER
- GROUND
- ISOLATED GROUND
- FUSE (POWER)
- FUSE (CONTROL)
- DISTRIBUTION BLOCK
- MAINTAINED TWO SELECTOR SWITCH
- MAINTAINED 3 POSITIONS SELECTOR SWITCH
- SPRING RETURN FROM LEFT 3 POSITIONS SELECTOR SWITCH
- SPRING RETURN FROM RIGHT 3 POSITIONS SELECTOR SWITCH
- SPRING RETURN FROM BOTH 3 POSITIONS SELECTOR SWITCH
- PUSH BUTTON
- PUSH BUTTON
- PULL BUTTON
- PULL BUTTON
- EMERGENCY STOP BUTTON
- POTENTIOMETER
- CURRENT TRANSFORMER
- THERMOSTAT
- THERMOSTAT
- 1 POLE CIRCUIT BREAKER
- COOLING FAN
- RECEPTACLE 120VAC WITH RJ45
- RECEPTACLE 120VAC DUPLEX
- PILOT LIGHT
- PUSH TO TEST PILOT LIGHT
- RELAY COIL
- RELAY COIL WITH SURGE SUPPRESSOR
- CONTACTOR COIL
- CONTACTOR COIL WITH SURGE SUPPRESSOR
- ALARM
- RESISTOR
- SOLENOID
- PULL CORD
- ZERO SPEED DETECTOR
- POWER BLOCK FOR FIELD WIRING
- TERMINAL
- WIRING JUNCTION
- KNIFE TERMINAL
- 3 POLES THERMAL MAGNETIC CIRCUIT BREAKER
- 3 POLES MAGNETIC CIRCUIT BREAKER
- 3 POLES FUSIBLE DISCONNECT SWITCH
- 3 POLES DISCONNECT SWITCH
- 3 POLES CONTACTOR
- 3 POLES OVERLOAD RELAY
- 1 POLE TRANSFORMER (H3, H2, H1, X2, X4, X1, X3)

### WIRE COLOR CODE

| MINIMAL 18AWG GAUGE | |
|---|---|
| POWER 120VAC | BLACK |
| CONTROL 120VAC | RED |
| NEUTRAL | WHITE |
| 24VDC | BLUE |
| 0VDC | BLUE/WHITE |
| DRY CONTRACT | YELLOW, 14AWG |
| NON-ISOLATED GROUND | GREEN |
| ISOLATED GROUND | GREEN/YELLOW |
| TWISTED PAIR | (+) BLACK & (-) WHITE |

### WIRE NUMBER

XX XX XX
- XX — LINE NUMBER
- XX — PAGE NUMBER
- XX — PANEL NUMBER

| REV | DESCRIPTION | DATE | REVD | CHKD | APVD | ECN |
|---|---|---|---|---|---|---|
| 1 | FOR APPROVAL | 2019-01-03 | RA | HZ | – | – |

CONFIDENTIALITY AND INTELLECTUAL PROPERTY NOTICE
ALL INFORMATION CONTAINED IN THIS DOCUMENT IS THE SOLE PROPERTY OF VEOLIA WATER TECHNOLOGIES CANADA INC. AND IS PROVIDED IN ALL APPLICABLE LAWS, INCLUDING BUT NOT LIMITED TO COPYRIGHT AND OTHER INTELLECTUAL PROPERTY LAWS. THE DESIGN CONCEPTS AND INFORMATION CONTAINED HEREIN ARE PROPRIETARY TO V.W.T. AND ARE SUBMITTED IN CONFIDENCE. THEY ARE NOT TRANSFERABLE. THEY SHALL NOT BE USED IN WHOLE OR IN PART FOR ANY PURPOSE THAT IS EXPRESSLY SUBMITTED AND HAS NOT/OR LICENCE IS GRANTED OTHERWISE BY THE SUBMISSION OF THIS DOCUMENT, THEY ARE CONFIDENTIAL AND PRIVILEGED INFORMATION OF V.W.T. AND THEY MUST NOT BE DISCLOSED, REPRODUCED, LOANED, REMITTED OR USED IN ANY OTHER MANNER WITHOUT THE EXPRESS WRITTEN CONSENT OF V.W.T. V.W.T. ASSUMES NO RESPONSIBILITY OR LIABILITY FOR THE USE OF THIS DOCUMENT, IN WHOLE OR IN PART, IN CONNECTION WITH ANY PROJECT OTHER HEREIN FOR ANOTHER PROJECT, OR IN A MANNER THAT DOES NOT RELATE TO THE FITNESS OR PURPOSE OF THIS DOCUMENT. IN NO EVENT SHALL THIS DOCUMENT OR THE DESIGN CONCEPTS AND INFORMATION CONTAINED HEREIN BE USED IN A MANNER DETRIMENTAL TO THE INTEREST OF V.W.T. ALL COPYRIGHT, PATENT AND OTHER INTELLECTUAL PROPERTY RIGHTS ARE RESERVED. ACCEPTANCE OF THE DELIVERY OF THIS DOCUMENT CONSTITUTES AGREEMENT TO THESE TERMS AND CONDITIONS.

| | |
|---|---|
| DESIGNER | DATE |
| – | – |
| CHECKER | DATE |
| – | – |
| ENGINEER | DATE |
| – | – |
| SCALE: | N/A |

TITLE: CONTROL PANEL LCP-02-300
LEGEND & DRAWING LIST

CLIENT: WWTP UPGRADE
CITY OF IQALUIT

VEOLIA
VEOLIA WATER TECHNOLOGIES CANADA INC. 4105 Sartelon, Saint-Laurent, Qc. Canada, Tel: (514) 334-7230

| PROJECT | DRAWING | INTERNAL | SHEET | REV |
|---|---|---|---|---|
| 5000218036-EPL – 0001-AU-VWT | | – | 02 OF 06 | 1 |

STD: "B" 11x17 | REF: A6798A | BAR = 1" AT PLOT SCALE

Jan 29, 2019 16:26:53 – G:\Projets A67XX\A6798A – VEOLIA – 5000218036 Iqaluit WWTP Upgrade\DOC\DESSIN\000-DRAWINGS\LCP-02-300\REV 1\5000218036-EPL-0001-AU-VWT-002.dwg – rasiani

NAME-PLATES

ENCLOSURE NEMA 4X-SS304 / 72H'' X 36W'' X 16D''
CSA APPROVAL

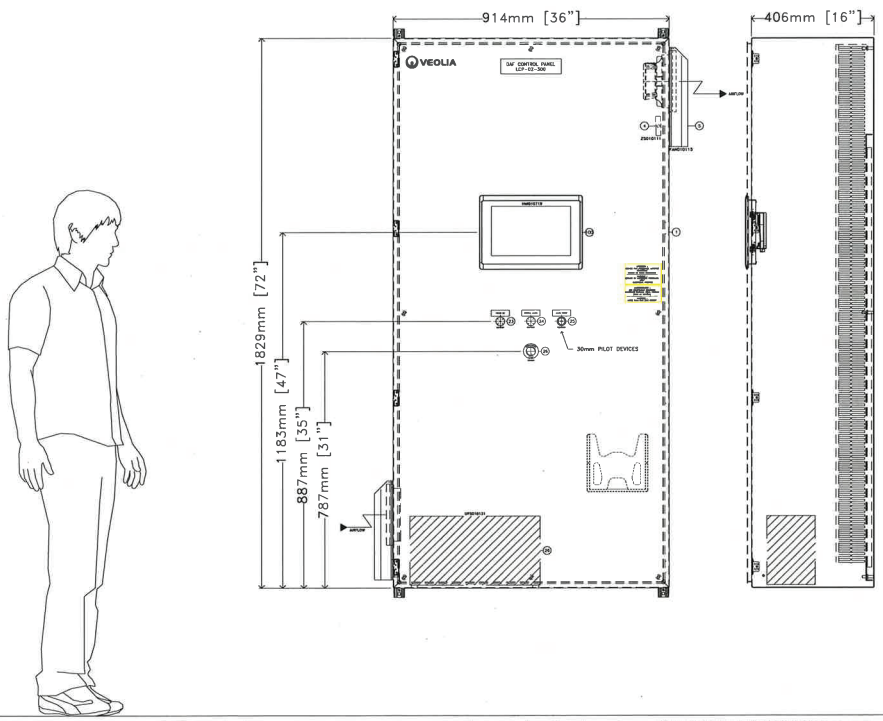


NAME-PLATES DETAILS :

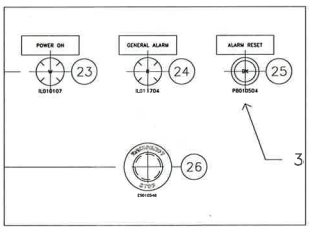


| REV | DESCRIPTION | DATE | REVD | CHKD | APVD | ECN |
|---|---|---|---|---|---|---|
| 1 | FOR APPROVAL | 2019-01-03 | RA | HZ | – | – |

CONFIDENTIALITY AND INTELLECTUAL PROPERTY NOTICE
ALL INFORMATION CONTAINED IN THIS DOCUMENT IS THE SOLE PROPERTY OF VEOLIA WATER TECHNOLOGIES CANADA INC. AND IS PROTECTED BY ALL APPLICABLE LAWS, MORE OR LESS TO COPYRIGHT AND OTHER INTELLECTUAL PROPERTY LAWS. THE DESIGN CONCEPTS AND INFORMATION CONTAINED HEREIN ARE PROPRIETARY TO V.W.T AND ARE SUBMITTED IN CONFIDENCE. THEY ARE NOT TRANSFERABLE. THEY MUST BE USED ONLY FOR THE PURPOSE FOR WHICH THE DOCUMENT IS EXPRESSLY SUBMITTED AND NO IMPLICIT LICENCE IS GRANTED OTHERWISE BY THE SUBMISSION OF THIS DOCUMENT. THEY ARE CONFIDENTIAL AND PRIVATEED INFORMATION OF V.W.T AND THEY MUST NOT BE DISCLOSED, REPRODUCED, LOANED, REMITTED OR USED IN ANY OTHER MANNER WITHOUT THE EXPRESS WRITTEN CONSENT OF V.W.T. V.W.T. ASSUMES NO RESPONSIBILITY OR LIABILITY FOR THE USE OF THIS DOCUMENT OR THE DESIGN CONCEPTS AND INFORMATION CONTAINED HEREIN FOR ANOTHER PROJECT, OR IN A MANNER THAT DOES NOT RELATE TO THE FITNESS OR PURPOSE OF THIS DOCUMENT. IN NO EVENT SHALL THIS DOCUMENT OR THE DESIGN CONCEPTS AND INFORMATION CONTAINED HEREIN BE USED IN A MANNER DETRIMENTAL TO THE INTEREST OF V.W.T. ALL COPYRIGHT, PATENT AND OTHER INTELLECTUAL PROPERTY RIGHTS ARE RESERVED. ACCEPTANCE OF THE DELIVERY OF THIS DOCUMENT CONSTITUTES AGREEMENT TO THESE TERMS AND CONDITIONS.

| DESIGNER | DATE |
|---|---|
| – | – |
| CHECKER | DATE |
| – | – |
| ENGINEER | DATE |
| – | – |
| SCALE: N/A | |

TITLE
CONTROL PANEL LCP-02-300
INTERNAL LAYOUT

CLIENT
WWTP UPGRADE
CITY OF IQALUIT

VEOLIA
VEOLIA WATER TECHNOLOGIES CANADA INC. 4105 Sartelon, Saint-Laurent, Qc, Canada. Tel: (514) 334-7230

| PROJECT | DRAWING | INTERNAL | SHEET | REV |
|---|---|---|---|---|
| 5000218036-EPL | 0001-AU-VWT | – | 03 OF 06 | 1 |

BAR = 1" AT PLOT SCALE
REF: A6798A
STD: "B" 11x17
Jan 29, 2019 16:26:55 - G:\Projets A67XX\A6798A - VEOLIA - 5000218036 Iqaluit WWTP
Upgrade\DOC\DESSIN\000-DRAWINGS\LCP-02-300\REV 1\5000218036-EPL-0001-AU-VWT-003.dwg - rosiani

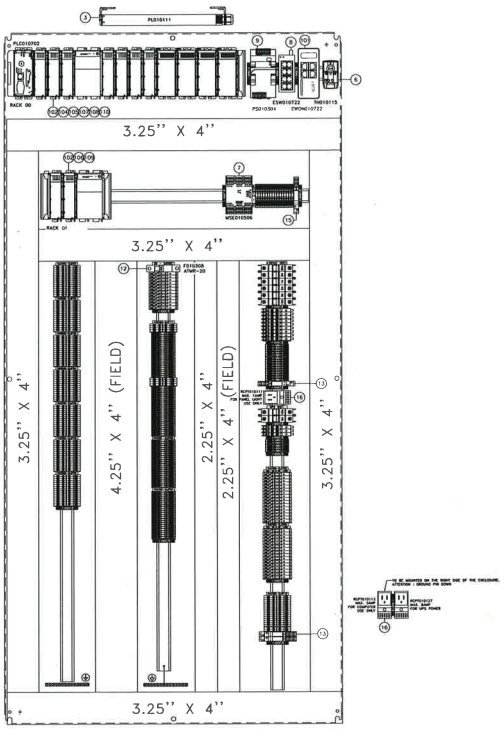


| REV | DESCRIPTION | DATE | REVD | CHKD | APVD | ECN |
|---|---|---|---|---|---|---|
| 1 | FOR APPROVAL | 2019-01-03 | RA | HZ | – | – |


**CONFIDENTIALITY AND INTELLECTUAL PROPERTY NOTICE**
ALL INFORMATION CONTAINED IN THIS DOCUMENT IS THE SOLE PROPERTY OF VEOLIA WATER TECHNOLOGIES CANADA INC. AND IS PROTECTED BY ALL APPLICABLE LAWS, INCLUDING BUT NOT LIMITED TO COPYRIGHT AND OTHER INTELLECTUAL PROPERTY LAWS. THE DESIGN CONCEPTS AND INFORMATION CONTAINED HEREIN ARE PROPRIETARY TO VWT AND ARE SUBMITTED IN CONFIDENCE. THEY ARE NOT TRANSFERABLE. THEY MUST BE USED ONLY FOR THE PURPOSE FOR WHICH THE DOCUMENT IS EXPRESSLY SUBMITTED AND NO IMPLICIT LICENCE IS GRANTED OTHERWISE BY THE SUBMISSION OF THIS DOCUMENT. THEY ARE CONFIDENTIAL AND PRIVILEGED INFORMATION OF VWT AND THEY MUST NOT BE DISCLOSED, REPRODUCED, LOANED, REMITTED OR USED IN ANY OTHER MANNER WITHOUT THE EXPRESS WRITTEN CONSENT OF VWT. VWT ASSUMES NO RESPONSIBILITY OR LIABILITY FOR THE USE OF THIS DOCUMENT OR THE DESIGN CONCEPTS AND INFORMATION CONTAINED HEREIN FOR ANOTHER PROJECT, OR IN A MANNER THAT DOES NOT RELATE TO THE FITNESS OR PURPOSE OF THIS DOCUMENT. IN NO EVENT SHALL THIS DOCUMENT OR THE DESIGN CONCEPTS AND INFORMATION CONTAINED HEREIN BE USED IN A MANNER DETRIMENTAL TO THE INTEREST OF VWT. ALL COPYRIGHT, PATENT AND OTHER INTELLECTUAL PROPERTY RIGHTS ARE RESERVED. ACCEPTANCE OF THE DELIVERY OF THIS DOCUMENT CONSTITUTES AGREEMENT TO THESE TERMS AND CONDITIONS.


| DESIGNER | DATE |
|---|---|
| – | – |
| CHECKER | DATE |
| – | – |
| ENGINEER | DATE |
| – | – |
| SCALE: N/A | |

TITLE
CONTROL PANEL LCP-02-300
INTERNAL LAYOUT

CLIENT
WWTP UPGRADE
CITY OF IQALUIT

VEOLIA
VEOLIA WATER TECHNOLOGIES CANADA INC. 4105 Sartelon, Saint-Laurent, Qc, Canada. Tel: (514) 334-7230

| PROJECT | DRAWING | INTERNAL | SHEET | REV |
|---|---|---|---|---|
| 5000218036-EPL | 0001-AU-VWT | – | 04 OF 06 | 1 |

STD: "B" 11x17 REF: A6798A BAR = 1" AT PLOT SCALE

Jan 29, 2019 16:26:57 – G:\Projets A67XX\A6798A – VEOLIA – 5000218036 Iqaluit WWTP
Upgrade\DOC\DESSIN\000 DRAWINGS\LCP 02 300\REV 1\5000218036 EPL 0001 AU VWT 004.dwg – rasiani

| ITEM | DESCRIPTION | PART NUMBER | MANUF. | QTY | BY |
|---|---|---|---|---|---|
| 1 | NEMA 4X ENCLOSURE, SS304, DIM 72"H x 36"W x 16"D<br>C/W CP7236, CMFXSS | CSD723616SSR | HOFFMAN | 1 | ENV |
| 2 | DATA POCKET 6"H x 6"W x 0.75"D | – | – | 1 | ENV |
| 3 | LED LIGHT 23 IN, 120V 10W<br>C/W CABLE LS2-PC6 + SIMPLE OUTLET 120VAC 2963860 PHOENIX | LS2-239-4 | PREMISE | 1 | ENV |
| 4 | DOOR SWITCH 1NO | FLKDS | HAMMOND | 2 | ENV |
| 5 | COOLING FILTER FAN NEMA12 24VDC<br>C/W OUTLET FILTER RITTAL 3239.200 + 3239.080 (2X) | 3239.124 | RITTAL | 1 | ENV |
| 6 | COOLING THERMOSTAT 0@60DEG C, 1NO CONTACT | FGT-200 | DBK | 1 | ENV |
| 7 | SAFETY RELAY<br>24VDC | 440R-G23216 | ALLEN-BRADLEY | 1 | ENV |
| 8 | UNMANAGED ETHERNET SWITCH, 8 PORT | IES-180B | WEIDMULLER | 1 | ENV |
| 9 | POWER SUPPLY 24VDC, 480W, 20AMP | 1606XLS480EC | ALLEN-BRADLEY | 1 | ENV |
| 10 | GND LUG, COPPER | CB3536CY | PANDUIT | 1 | ENV |
| 11 | GND BAR, COPPER | 4C-190 | NSI | 1 | ENV |
| 12 | FUSE HOLDER 1 POLE TYPE CC<br>C/W FUSE, ATMR-20(1X) | USCC1 | MERSEN | 1 | ENV |
| 12<br>– | –<br>– | –<br>– | –<br>– | –<br>– | ENV |
| 13 | 2 POLES RELAY, 120VAC COIL<br>C/W BASE 700-HN222 | 700-HK32A1 | ALLEN-BRADLEY | A/R | ENV |
| 14 | BREAKER 1P, 277VCA, CURVE C, XA<br>ACCORDING TO THE TERMINAL LAYOUT PAGE | M9FXXXX | SCHNEIDER | A/R | ENV |
| 15 | RELAY 2POT COIL 24VDC<br>C/W BASE 700-HN222 | 700-HK32Z24 | ALLEN-BRADLEY | A/R | ENV |
| 16 | SIMPLE OUTLET, 120VAC | 2963860 | PHOENIX CONTACT | 3 | ENV |
| 17 | TERMINAL 2 LEVEL WDK 2.5<br>C/W END PLATE 1059100000 | 1021500000 | WEIDMULLER | LOT | ENV |
| 18 | TERMINAL 3 LEVEL DLD 2.5<br>C/W END PLATE 1784210000 | 1784180000 | WEIDMULLER | LOT | ENV |
| 19 | TERMINAL 600VAC/DC, 20A WDU 2.5<br>C/W END PLATE 1050000000 | 1020000000 | WEIDMULLER | LOT | ENV |
| 20 | KNIFE TERMINAL 300VAC/DC, 10A, WTR 2.5<br>C/W END PLATE 1050000000 | 1855610000 | WEIDMULLER | LOT | ENV |
| 21 | TERMINAL 1 LEVEL WDU 4<br>C/W END PLATE 1050000000 | 1020100000 | WEIDMULLER | LOT | ENV |
| 22 | TERMINAL 1 LEVEL WDU 6<br>C/W SEPARATOR 1050100000 | 1020200000 | WEIDMULLER | LOT | ENV |
| 23 | WHITE PILOT LIGHT, 30mm<br>120VAC | 9001SKP3BW31 | SQUARE D | 1 | ENV |
| 24 | RED PILOT LIGHT, 30mm<br>24VDC | 9001SKP3SR31 | SQUARE D | 1 | ENV |
| 25 | BLACK PUSH BUTTON, 30mm<br>NEMA4X | 9001SKR1U | SQUARE D | 1 | ENV |
| 26 | RED EMERGENCY STOP PUSH BUTTON, 30mm<br>C/W CONTACT | 9001SKR16H2 | SQUARE D | 1 | ENV |
| 27 | END ANCHOR WEW 35/2 | 1061200000 | WEIDMULLER | A/R | ENV |
| 28 | FUSE HOLDER ¼ X 1¼ WSI 4/2 | 1880430000 | WEIDMULLER | A/R | ENV |
| 29 | FUSE TERMINAL<br>C/W END PLATE 1492-N37 | 9532440000 | WEIDMULLER | A/R | ENV |
| 30 | FAST ACTING MINI FUSE 5X20MM 250VAC XA<br>C/W SPARE | GMA-X | BUSSMANN | A/R | ENV |
| 31 | FUSE, FAST ACTING, 1/4 x 1-1/4, XA | AGC-X | BUSSMANN | A/R | ENV |

VEOLIA PARTS LIST

| ITEM | DESCRIPTION | PART NUMBER | MANUF. | QTY | BY |
|---|---|---|---|---|---|
| 100 | PanelView Plus 7 Performance Terminal, Touch Screen, 12 WXGA<br>24VDC | 2711P-T12W22D9P | ALLEN-BRADLEY | 1 | VEO |
| 101 | MODEM, 24VDC | E-WON | FLEXY20500-00 | 1 | VEO |
| 102 | PLC POWER SUPPLY<br>120VAC, 200VA | 1769-PA4 | ALLEN-BRADLEY | 2 | VEO |
| 103 | | | | | VEO |
| 104 | INPUT CARD, 16 PTS, 24VDC | 1769-IQ16 | ALLEN-BRADLEY | 7 | VEO |
| 105 | OUTPUT CARD, 16 PTS | 1769-OW16 | ALLEN-BRADLEY | 3 | VEO |
| 106 | ANALOG OUTPUT CARD, 8 PTS | 1769-OF8C | ALLEN-BRADLEY | 2 | VEO |
| 107 | ANALOG INPUT CARD, 16PTS | 1756-IF16 | ALLEN-BRADLEY | 1 | VEO |
| 108 | PLC CPU | 1769-L33ERM | ALLEN-BRADLEY | 1 | VEO |
| 109 | RIGHT END CAP | 1769-ECR | ALLEN-BRADLEY | 1 | VEO |
| 110 | EXPANSION CABLE<br>RIGHT TO LEFT CABLE | 1769-CRL3 | ALLEN-BRADLEY | 1 | VEO |
| 111 | EXPANSION CABLE<br>RIGHT TO LEFT CABLE | 1769-CRL3 | ALLEN-BRADLEY | 1 | VEO |
| 112 | UPS, 1000VA, 120VAC, 1PH | PW9130L1000T-XL | EATON | 1 | VEO |

| REV | DESCRIPTION | DATE | REVD | CHKD | APVD | ECN |
|---|---|---|---|---|---|---|
| 1 | FOR APPROVAL | 2019-01-03 | RA | HZ | – | – |

CONFIDENTIALITY AND INTELLECTUAL PROPERTY NOTICE
ALL INFORMATION CONTAINED IN THIS DOCUMENT IS THE SOLE PROPERTY OF VEOLIA WATER TECHNOLOGIES CANADA INC. AND IS PROTECTED BY ALL APPLICABLE LAWS, INCLUDING BUT NOT LIMITED TO COPYRIGHT AND OTHER INTELLECTUAL PROPERTY LAWS. ANY UNAUTHORIZED USE, DISCLOSURE OR REPRODUCTION IS PROHIBITED. THIS DOCUMENT AND THE INFORMATION CONTAINED HEREIN WAS PREPARED FOR THE EXCLUSIVE USE OF V.W.T. AND IS SUBMITTED IN CONFIDENCE. THEY ARE NOT TRANSFERABLE. THEY MUST BE USED ONLY FOR THE PURPOSE FOR WHICH THE DOCUMENT IS EXPRESSLY SUBMITTED AND NO IMPLICIT LICENCE IS GRANTED OTHERWISE BY THE SUBMISSION OF THIS DOCUMENT. THEY ARE CONFIDENTIAL AND PRIVILEGED INFORMATION OF V.W.T. AND THEY MUST NOT BE DISCLOSED, REPRODUCED OR USED IN WHOLE OR IN PART FOR ANY OTHER MARKETS WITHOUT THE EXPRESS WRITTEN CONSENT OF V.W.T. V.W.T. ASSUMES NO RESPONSIBILITY OR LIABILITY FOR THE USE OF THIS DOCUMENT OR THE DESIGN CONCEPTS AND INFORMATION CONTAINED HEREIN FOR ANOTHER PROJECT, OR IN A MANNER THAT DOES NOT RELATE TO THE PURPOSE OR PURPOSE OF THIS DOCUMENT. IN NO EVENT SHALL YOU REMOVE OR ALTER THIS CONFIDENTIALITY AND INTELLECTUAL PROPERTY NOTICE. YOU AGREE NOT TO USE IN A MANNER CONTRARY TO THE INTERESTS OF V.W.T. ALL COPYRIGHT, PATENT AND OTHER INTELLECTUAL PROPERTY RIGHTS ARE RESERVED. ACCEPTANCE OF THE DELIVERY OF THIS DOCUMENT CONSTITUTES AGREEMENT TO THESE TERMS AND CONDITIONS.

| | | |
|---|---|---|
| DESIGNER | – | DATE – |
| CHECKER | – | DATE – |
| ENGINEER | – | DATE – |
| SCALE: | N/A | |

TITLE: CONTROL PANEL LCP-02-300
BILL OF MATERIAL

CLIENT: WWTP UPGRADE
CITY OF IQALUIT

VEOLIA
VEOLIA WATER TECHNOLOGIES CANADA INC. 4105 Sartelon, Saint-Laurent, Qc. Canada. Tel. (514) 334-7230

| PROJECT DRAWING | INTERNAL | SHEET | REV |
|---|---|---|---|
| 50002180.36-EPL – 0001-AU-VWT | – | 06 OF 06 | 1 |

STD: "B" 11x17 | REF: A6798A | BAR = 1" AT PLOT SCALE

Jan 29, 2019 - 16:26:56 - G:\Projets A67XX\A6798A - VEOLIA - 50002180.36 Iqaluit WWTP Upgrade\DOC\DESSIN\000-DRAWINGS\LCP-02-300\REV 1\50002180.36-EPL-0001-AU-VWT-006.dwg - rosiani

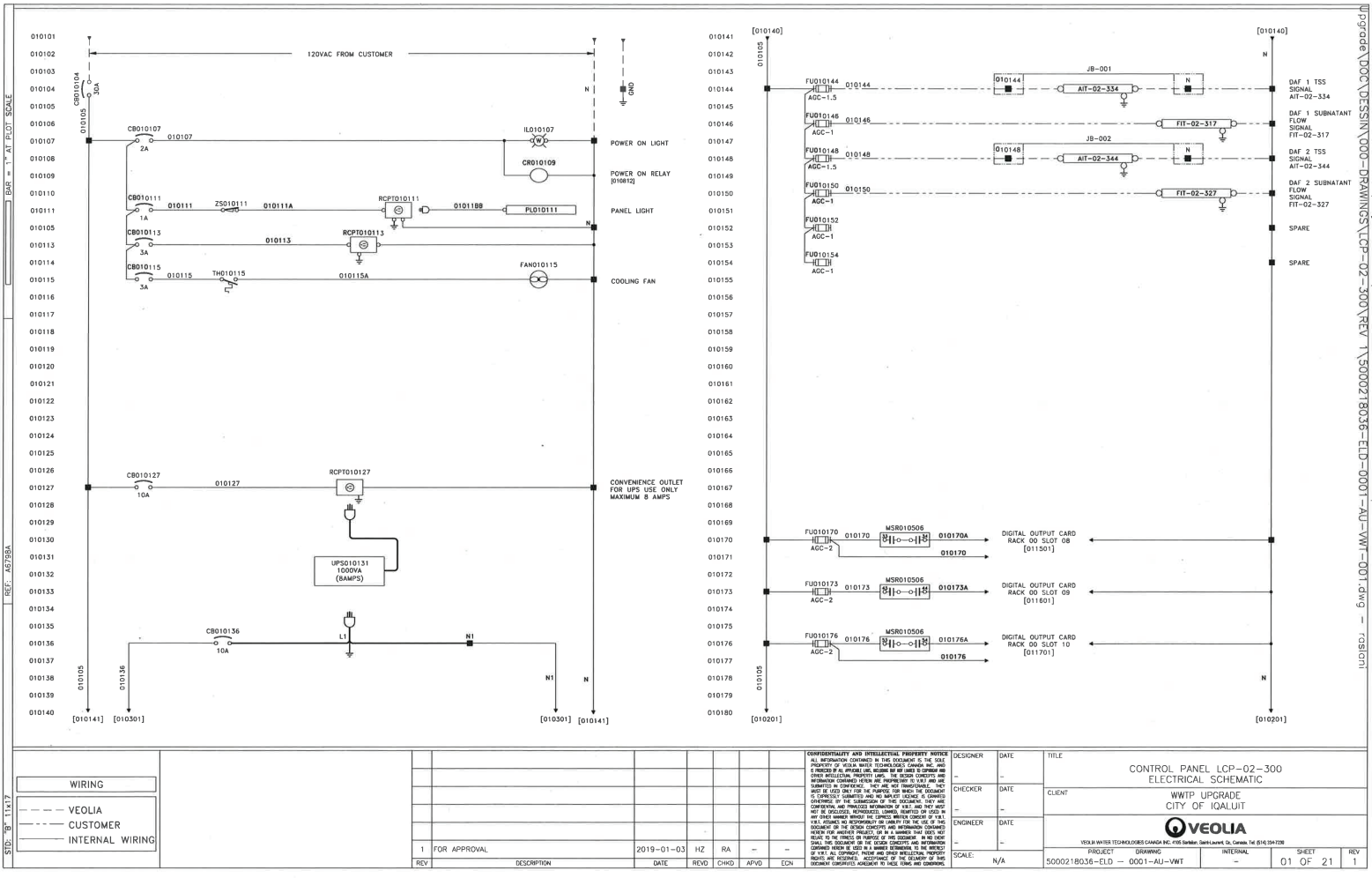


BAR = 1" AT PLOT SCALE

REF: A6798A

STD: "B" 11x17

| WIRING |
|---|
| VEOLIA |
| CUSTOMER |
| INTERNAL WIRING |

| REV | DESCRIPTION | DATE | REVD | CHKD | APVD | ECN |
|---|---|---|---|---|---|---|
| 1 | FOR APPROVAL | 2019-01-03 | HZ | RA | – | – |


CONFIDENTIALITY AND INTELLECTUAL PROPERTY NOTICE
ALL INFORMATION CONTAINED IN THIS DOCUMENT IS THE SOLE PROPERTY OF VEOLIA WATER TECHNOLOGIES CANADA INC. AND IS PROTECTED BY ALL APPLICABLE LAWS, INCLUDING BUT NOT LIMITED TO COPYRIGHT AND OTHER INTELLECTUAL PROPERTY LAWS. THE DESIGN CONCEPTS AND INFORMATION CONTAINED HEREIN ARE PROPRIETARY TO V.W.T. AND ARE SUBMITTED IN CONFIDENCE. THEY ARE NOT TRANSFERABLE. THEY MUST BE USED ONLY FOR THE PURPOSE FOR WHICH THE DOCUMENT IS EXPRESSLY SUBMITTED AND NO IMPLICIT LICENCE IS GRANTED OTHERWISE BY THE SUBMISSION OF THIS DOCUMENT. THEY ARE CONFIDENTIAL AND PRIVILEGED INFORMATION OF V.W.T. AND THEY MUST NOT BE DISCLOSED, REPRODUCED, LOANED, REMITTED OR USED IN ANY OTHER MANNER WITHOUT THE EXPRESS WRITTEN CONSENT OF V.W.T. V.W.T. ASSUMES NO RESPONSIBILITY OR LIABILITY FOR THE USE OF THIS DOCUMENT OR THE DESIGN CONCEPTS AND INFORMATION CONTAINED HEREIN FOR ANOTHER PROJECT, OR IN A MANNER THAT DOES NOT RELATE TO THE FITNESS OR PURPOSE OF THIS DOCUMENT. IN NO EVENT SHALL THIS DOCUMENT OR THE DESIGN CONCEPTS AND INFORMATION CONTAINED HEREIN BE USED IN A MANNER DETRIMENTAL TO THE INTEREST OF V.W.T. ALL COPYRIGHT, PATENT AND OTHER INTELLECTUAL PROPERTY RIGHTS ARE RESERVED. ACCEPTANCE OF THE DELIVERY OF THIS DOCUMENT CONSTITUTES AGREEMENT TO THESE TERMS AND CONDITIONS.


| DESIGNER | DATE |
|---|---|
| – | – |
| CHECKER | DATE |
| – | – |
| ENGINEER | DATE |
| – | – |
| SCALE: N/A | |

TITLE: CONTROL PANEL LCP-02-300 ELECTRICAL SCHEMATIC

CLIENT: WWTP UPGRADE CITY OF IQALUIT

VEOLIA

VEOLIA WATER TECHNOLOGIES CANADA INC. 4105 Sartelon, Saint-Laurent, Qc, Canada, Tel: (514) 334-7230

| PROJECT | DRAWING | INTERNAL | SHEET | REV |
|---|---|---|---|---|
| 5000218036-ELD | 0001-AU-VWT | – | 01 OF 21 | 1 |

Jan 29, 2019 16:27:00 – G:\Projets A67XX\A6798A – VEOLIA – 5000218036 Iqaluit WWTP Upgrade\DOC\DESSIN\000-DRAWINGS\LCP-02-300\REV 1\5000218036-ELD-0001-AU-VWT-001.dwg – rastani

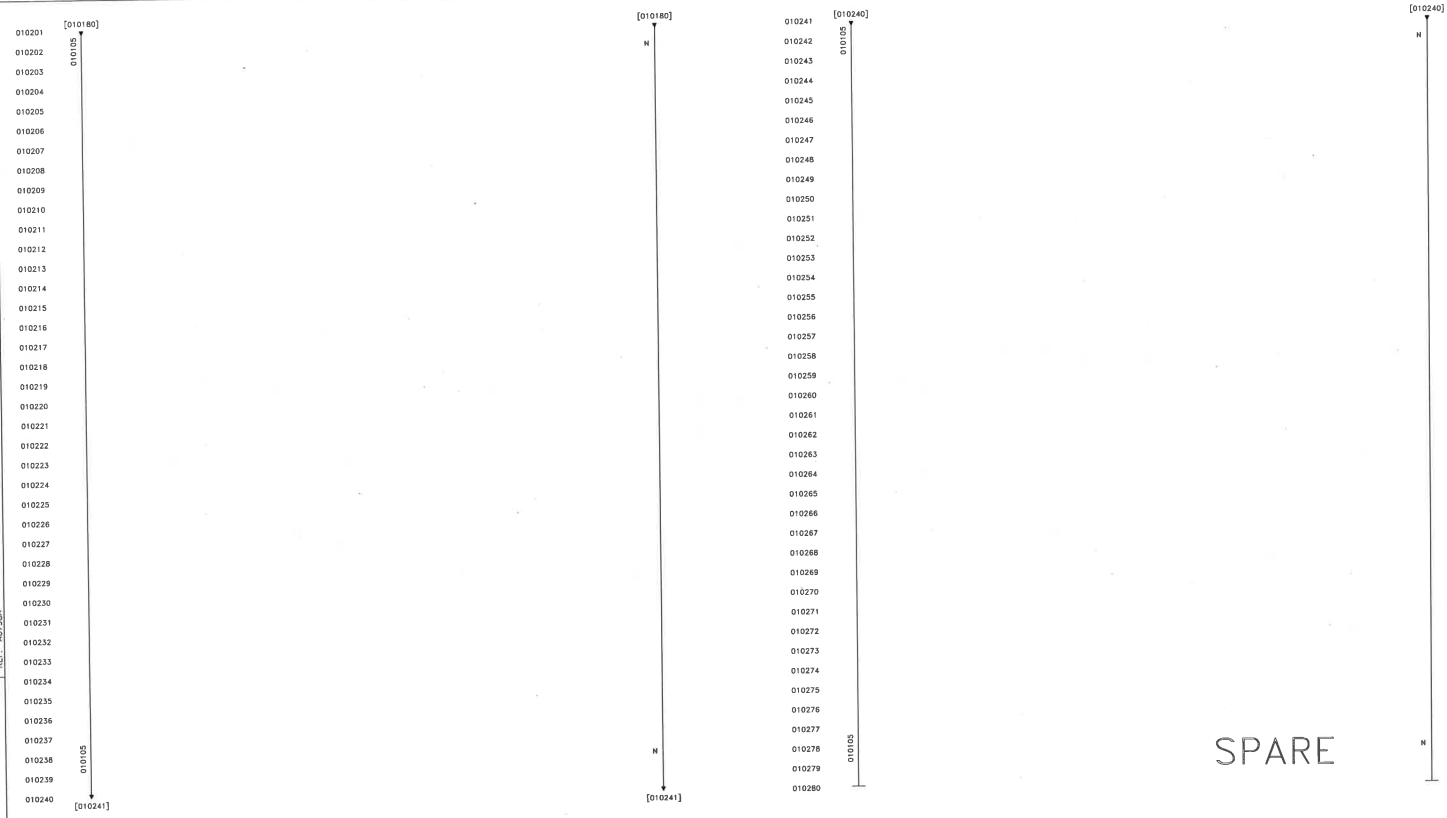


BAR = 1" AT PLOT SCALE

REF: A6798A

STD: "B" 11x17

| REV | DESCRIPTION | DATE | REVD | CHKD | APVD | ECN |
|---|---|---|---|---|---|---|
| 1 | FOR APPROVAL | 2019-01-03 | HZ | RA | – | – |

CONFIDENTIALITY AND INTELLECTUAL PROPERTY NOTICE
ALL INFORMATION CONTAINED IN THIS DOCUMENT IS THE SOLE PROPERTY OF VEOLIA WATER TECHNOLOGIES CANADA INC. AND IS PROTECTED BY ALL APPLICABLE LAWS, INCLUDING BUT NOT LIMITED TO COPYRIGHT AND OTHER INTELLECTUAL PROPERTY LAWS. THE DESIGN CONCEPTS AND INFORMATION CONTAINED HEREIN ARE PROPRIETARY TO V.W.T. AND ARE SUBMITTED IN CONFIDENCE. THEY ARE NOT TRANSFERABLE, MAY NOT BE USED, DISCLOSED OR REPRODUCED WITHOUT THE PRIOR WRITTEN CONSENT OF V.W.T. AND NO IMPLICIT LICENCE IS GRANTED OTHERWISE BY THE SUBMISSION OF THIS DOCUMENT. THEY ARE CONFIDENTIAL AND PRIVILEGED INFORMATION OF V.W.T. AND THEY MUST NOT BE DISCLOSED, REPRODUCED, LOANED, REMITTED OR USED IN ANY OTHER MANNER WITHOUT THE EXPRESS WRITTEN CONSENT OF V.W.T. V.W.T. ASSUMES NO RESPONSIBILITY OR LIABILITY FOR THE USE OF THE DESIGN CONCEPTS AND INFORMATION CONTAINED IN THIS DOCUMENT HEREIN FOR ANOTHER PROJECT, OR IN A MANNER THAT DOES NOT RELATE TO THE FITNESS OR PURPOSE OF THIS DOCUMENT. IN NO EVENT SHALL THIS DOCUMENT OR THE DESIGN CONCEPTS AND INFORMATION CONTAINED HEREIN BE USED IN A MANNER DETRIMENTAL TO THE INTEREST OF V.W.T. ALL COPYRIGHT, PATENT AND OTHER INTELLECTUAL PROPERTY RIGHTS ARE RESERVED. ACCEPTANCE OR DELIVERY OF THIS DOCUMENT CONSTITUTES AGREEMENT TO THESE TERMS AND CONDITIONS.

| | | DATE |
|---|---|---|
| DESIGNER | – | – |
| CHECKER | – | – |
| ENGINEER | – | – |
| SCALE: | N/A | |

TITLE: CONTROL PANEL LCP-02-300
ELECTRICAL SCHEMATIC

CLIENT: WWTP UPGRADE
CITY OF IQALUIT

VEOLIA

VEOLIA WATER TECHNOLOGIES CANADA INC. 4105 Sartelon, Saint-Laurent, Qc. Canada, Tel: (514) 334-7230

| PROJECT / DRAWING | INTERNAL | SHEET | REV |
|---|---|---|---|
| 5000218036-ELD – 0001-AU-VWT | – | 02 OF 21 | 1 |

Jan 29, 2019 16:27:00 – G:\Projets A6?XX\A6798A – VEOLIA – 5000218036 Iqaluit WWTP Upgrade\DOC\DESSIN\000-DRAWINGS\LCP-02-300\REV 1\5000218036-ELD-0001-AU-VWT-002.dwg – rosloni

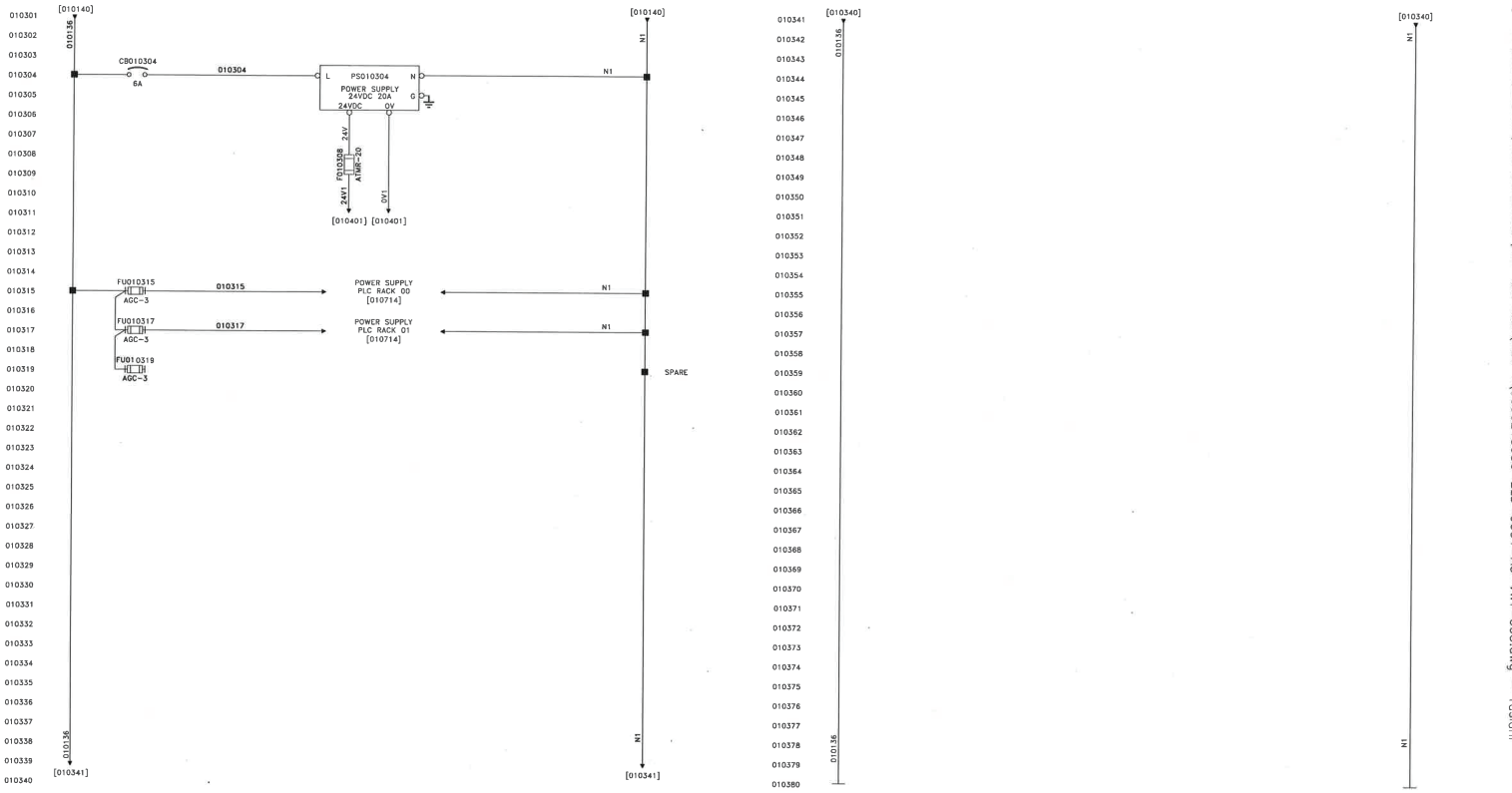


Jan 29, 2019 16:27:02 - G:\Projets A67XX\A6798A - VEOLIA - 5000218036 Iqaluit WWTP Upgrade\DOC\DESSIN\000-DRAWINGS\LCP-02-300\REV 1\5000218036-ELD-0001-AU-VWT-003.dwg - raslani

| REV | DESCRIPTION | DATE | REVD | CHKD | APVD | ECN |
|---|---|---|---|---|---|---|
| 1 | FOR APPROVAL | 2019-01-03 | HZ | RA | – | – |

CONFIDENTIALITY AND INTELLECTUAL PROPERTY NOTICE
ALL INFORMATION CONTAINED IN THIS DOCUMENT IS THE SOLE PROPERTY OF VEOLIA WATER TECHNOLOGIES CANADA INC. AND IS PROTECTED BY ALL APPLICABLE LAWS, INCLUDING BUT NOT LIMITED TO COPYRIGHT AND OTHER INTELLECTUAL PROPERTY LAWS. THE DESIGN CONCEPTS AND INFORMATION CONTAINED HEREIN ARE PROPRIETARY TO V.W.T. AND ARE SUBMITTED IN CONFIDENCE. THEY ARE NOT TRANSFERABLE. THEY MUST BE USED ONLY FOR THE PURPOSE FOR WHICH THE DOCUMENT IS EXPRESSLY SUBMITTED AND NO IMPLICIT LICENCE IS GRANTED OTHERWISE BY THE SUBMISSION OF THIS DOCUMENT. THEY ARE CONFIDENTIAL AND PRIVILEGED INFORMATION OF V.W.T. AND THEY MUST NOT BE DISCLOSED, REPRODUCED, LOANED, REMITTED OR USED IN ANY OTHER MANNER WITHOUT THE EXPRESS WRITTEN CONSENT OF V.W.T. V.W.T. ASSUMES NO RESPONSIBILITY OR LIABILITY FOR THE USE OF THIS DOCUMENT OR THE DESIGN CONCEPTS AND INFORMATION CONTAINED HEREIN FOR ANOTHER PROJECT, OR IN A MANNER THAT DOES NOT RELATE TO THE FORMS OR PURPOSE OF THIS DOCUMENT. IN NO EVENT SHALL THIS DOCUMENT OR THE DESIGN CONCEPTS AND INFORMATION CONTAINED HEREIN BE USED IN A MANNER DETRIMENTAL TO THE INTEREST OF V.W.T. ALL COPYRIGHT, PATENT AND OTHER INTELLECTUAL PROPERTY RIGHTS ARE RESERVED. ACCEPTANCE OF THE DELIVERY OF THIS DOCUMENT CONSTITUTES AGREEMENT TO THESE TERMS AND CONDITIONS.

| DESIGNER | DATE |
|---|---|
| – | – |
| CHECKER | DATE |
| – | – |
| ENGINEER | DATE |
| – | – |
| SCALE: N/A | |

TITLE
CONTROL PANEL LCP-02-300
ELECTRICAL SCHEMATIC

CLIENT
WWTP UPGRADE
CITY OF IQALUIT

VEOLIA
VEOLIA WATER TECHNOLOGIES CANADA INC. 4105 Sartelon, Saint-Laurent, Qc. Canada. Tel: (514) 334-7230

| PROJECT | DRAWING | INTERNAL | SHEET | REV |
|---|---|---|---|---|
| 5000218036-ELD – 0001-AU-VWT | | – | 03 OF 21 | 1 |

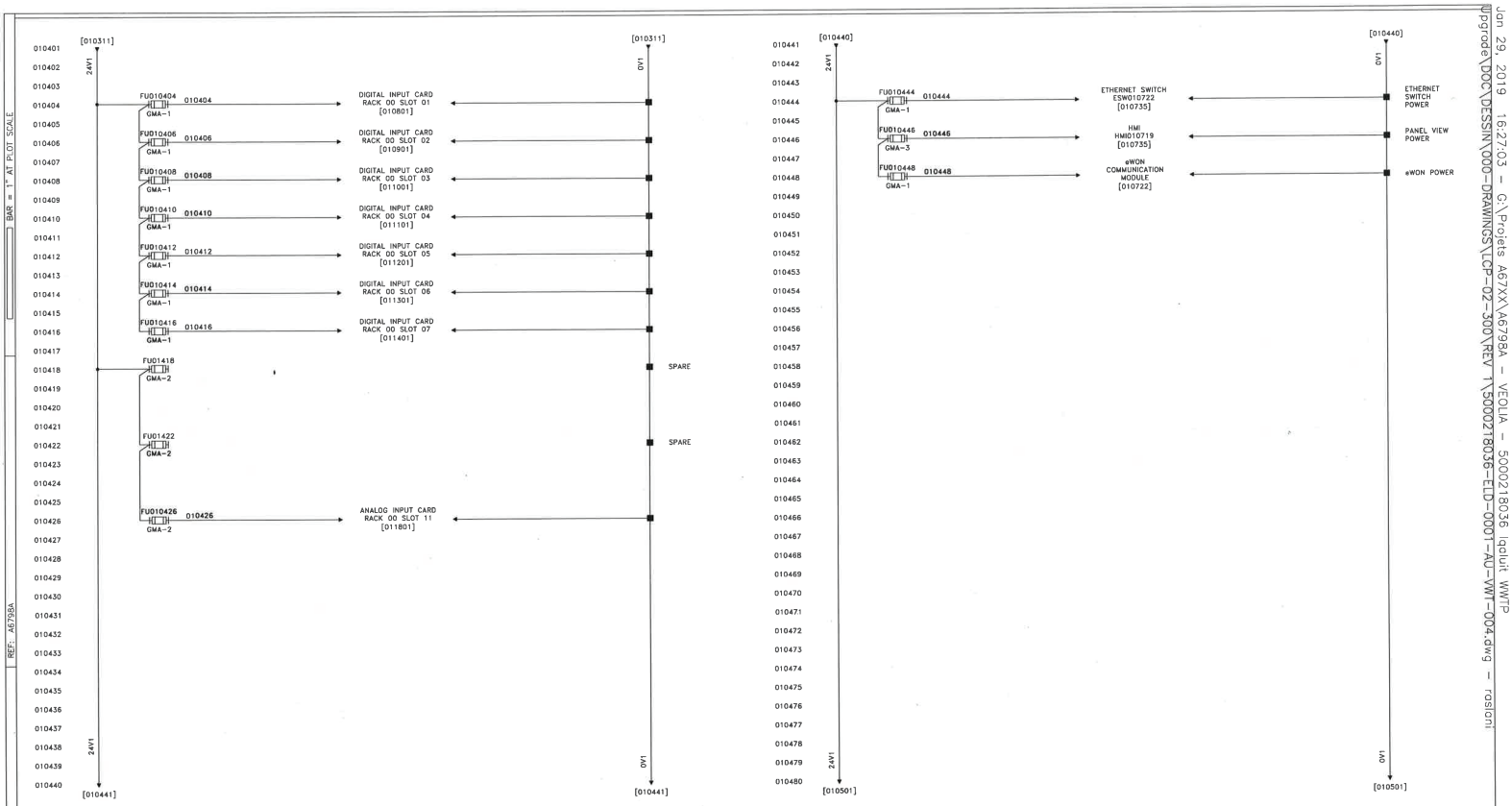


BAR = 1" AT PLOT SCALE

REF: A6798A

STD: "B" 11x17

| REV | DESCRIPTION | DATE | REVD | CHKD | APVD | ECN |
|---|---|---|---|---|---|---|
| 1 | FOR APPROVAL | 2019-01-03 | HZ | RA | – | – |

CONFIDENTIALITY AND INTELLECTUAL PROPERTY NOTICE
ALL INFORMATION CONTAINED IN THIS DOCUMENT IS THE SOLE PROPERTY OF VEOLIA WATER TECHNOLOGIES CANADA INC. AND IS PROTECTED BY ALL APPLICABLE LAWS, INCLUDING BUT NOT LIMITED TO COPYRIGHT AND OTHER INTELLECTUAL PROPERTY LAWS. THE DESIGN CONCEPTS AND INFORMATION CONTAINED HEREIN ARE PROPRIETARY TO VWT AND ARE SUBMITTED IN CONFIDENCE. THEY MUST NOT BE DISCLOSED, USED OR REPRODUCED FOR PURPOSES FOR WHICH THE DOCUMENT IS NOT EXPRESSLY SUBMITTED AND NO IMPLICIT LICENCE IS GRANTED OTHERWISE BY THE SUBMISSION OF THIS DOCUMENT. THEY ARE CONFIDENTIAL AND PRIVILEGED INFORMATION OF VWT AND THEY MUST NOT BE DISCLOSED, REPRODUCED, LOANED, TRANSMITTED OR USED IN ANY OTHER MANNER WITHOUT THE EXPRESS WRITTEN CONSENT OF VWT. IF YOU ARE NOT THE INTENDED RECIPIENT OF THIS DOCUMENT, YOU MUST RETURN THE DOCUMENT OR THE DESIGN CONCEPTS AND INFORMATION CONTAINED HEREIN FOR ANOTHER PROJECT, OR IN A MANNER THAT DOES NOT RELATE TO THE FITNESS OR PURPOSE OF THIS DOCUMENT. IN NO EVENT SHALL THIS DOCUMENT OR THE DESIGN CONCEPTS AND INFORMATION CONTAINED HEREIN BE USED IN A MANNER DETRIMENTAL TO THE INTERESTS OF VWT. ALL COPYRIGHT, PATENT AND OTHER INTELLECTUAL PROPERTY RIGHTS ARE RESERVED. ACCEPTANCE OF THIS DOCUMENT OR ITS CONTENTS CONSTITUTES AGREEMENT TO THESE TERMS AND CONDITIONS.

| | |
|---|---|
| DESIGNER | DATE – |
| CHECKER | DATE – |
| ENGINEER | DATE – |
| SCALE: | N/A |

TITLE
CONTROL PANEL LCP-02-300
ELECTRICAL SCHEMATIC

CLIENT
WWTP UPGRADE
CITY OF IQALUIT

VEOLIA
VEOLIA WATER TECHNOLOGIES CANADA INC. 4105 Sartelon, Saint-Laurent, Qc, Canada, Tel: (514) 334-7230

| PROJECT | DRAWING | INTERNAL | SHEET | REV |
|---|---|---|---|---|
| 5000218036-ELD – 0001-AU-VWT | | – | 04 OF 21 | 1 |

Jan 29, 2019 16:27:03 – G:\Projets A67XX\A6798A – VEOLIA – 5000218036 Iqaluit WWTP Upgrade\DOC\DESSIN\000-DRAWINGS\LCP-02-300\REV 1\5000218036-ELD-0001-AU-VWT-004.dwg – rosiarn

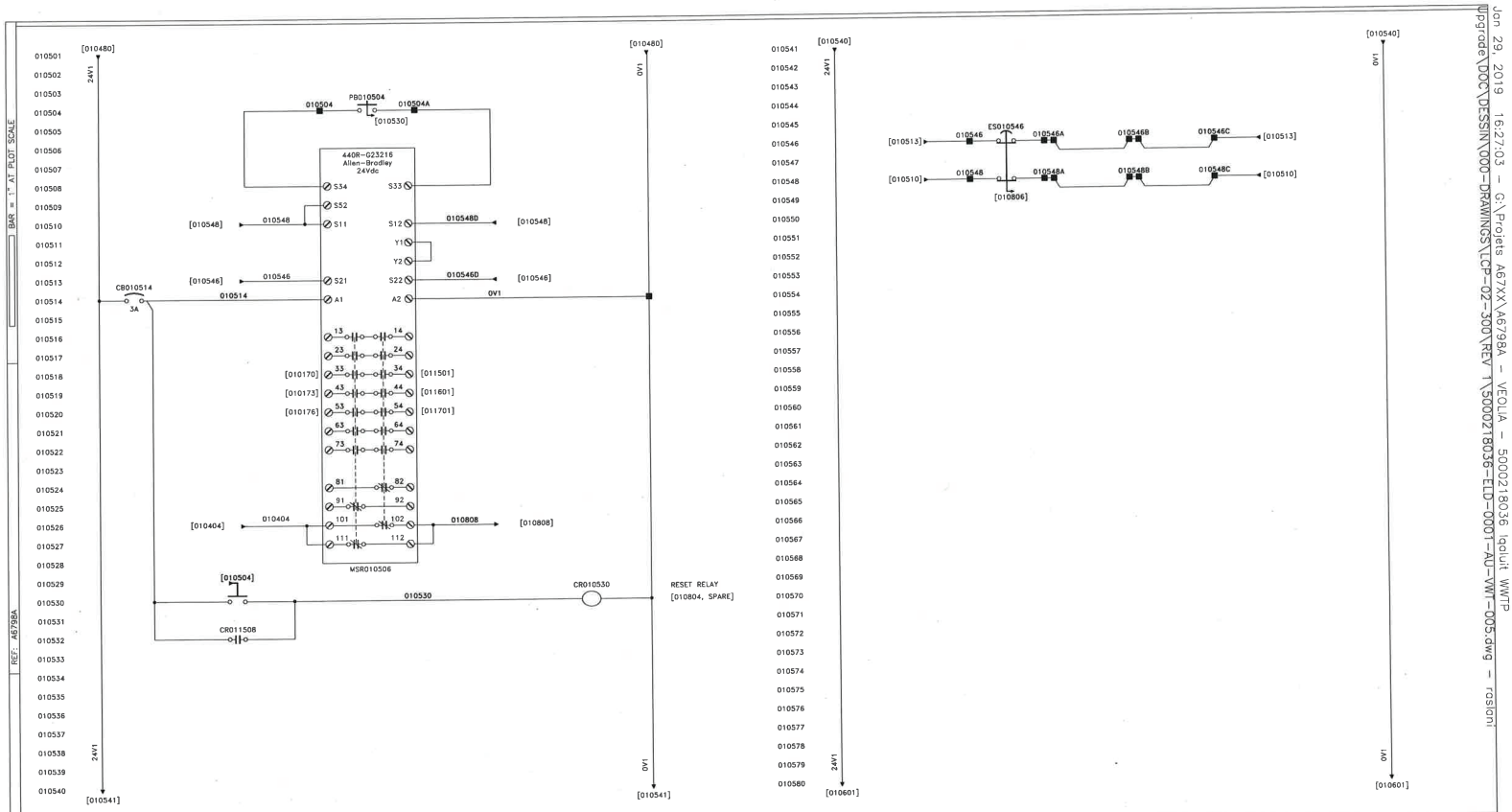


| REV | DESCRIPTION | DATE | REVD | CHKD | APVD | ECN |
|---|---|---|---|---|---|---|
| 1 | FOR APPROVAL | 2019-01-03 | HZ | RA | – | – |


CONFIDENTIALITY AND INTELLECTUAL PROPERTY NOTICE
ALL INFORMATION CONTAINED IN THIS DOCUMENT IS THE SOLE PROPERTY OF VEOLIA WATER TECHNOLOGIES CANADA INC. AND IS PROTECTED BY ALL APPLICABLE LAWS. INCLUDING BUT NOT LIMITED TO COPYRIGHT AND OTHER INTELLECTUAL PROPERTY LAWS. THE DESIGN CONCEPTS AND INFORMATION CONTAINED HEREIN ARE PROPRIETARY TO V.W.T. AND ARE SUBMITTED IN CONFIDENCE. THEY ARE NOT TRANSFERABLE. THEY MUST BE USED ONLY FOR THE PURPOSE FOR WHICH THE DOCUMENT IS EXPRESSLY SUBMITTED AND NO IMPLICIT LICENCE IS GRANTED OTHERWISE BY THE SUBMISSION OF THIS DOCUMENT. THEY ARE CONFIDENTIAL AND PRIVILEGED INFORMATION OF V.W.T. AND THEY MUST NOT BE DISCLOSED, REPRODUCED, LOANED, REMITTED OR USED IN ANY OTHER MANNER WITHOUT THE EXPRESS WRITTEN CONSENT OF V.W.T. V.W.T. ASSUMES NO RESPONSIBILITY OR LIABILITY FOR THE USE OF THIS DOCUMENT OR THE DESIGN CONCEPTS AND INFORMATION CONTAINED HEREIN FOR ANOTHER PROJECT, OR IN A MANNER THAT DOES NOT RELATE TO THE FOREGOING OR PURPOSE OF THIS DOCUMENT. IN NO EVENT SHALL THIS DOCUMENT OR THE DESIGN CONCEPTS AND INFORMATION CONTAINED HEREIN BE USED IN A MANNER DETRIMENTAL TO THE INTEREST OF V.W.T. ALL COPYRIGHT, PATENT AND OTHER INTELLECTUAL PROPERTY RIGHTS ARE RESERVED. ACCEPTANCE OF THE DELIVERY OF THIS DOCUMENT CONSTITUTES AGREEMENT TO THESE TERMS AND CONDITIONS.


| DESIGNER | DATE |
|---|---|
| – | – |
| CHECKER | DATE |
| – | – |
| ENGINEER | DATE |
| – | – |
| SCALE: N/A | |

TITLE
CONTROL PANEL LCP-02-300
ELECTRICAL SCHEMATIC

CLIENT
WWTP UPGRADE
CITY OF IQALUIT

VEOLIA
VEOLIA WATER TECHNOLOGIES CANADA INC. 4195 Sartelon, Saint-Laurent, Qc, Canada. Tel (514) 334-7230

| PROJECT | DRAWING | INTERNAL | SHEET | REV |
|---|---|---|---|---|
| 5000218036-ELD | 0001-AU-VWT | – | 05 OF 21 | 1 |

Jan 29, 2019 16:27:03 – G:\Projets A67XX\A6798A – VEOLIA – 5000218036 Iqaluit WWTP Upgrade\DOC\DESSIN\000-DRAWINGS\LCP-02-300\REV 1\5000218036-ELD-0001-AU-VWT-005.dwg – rosloni

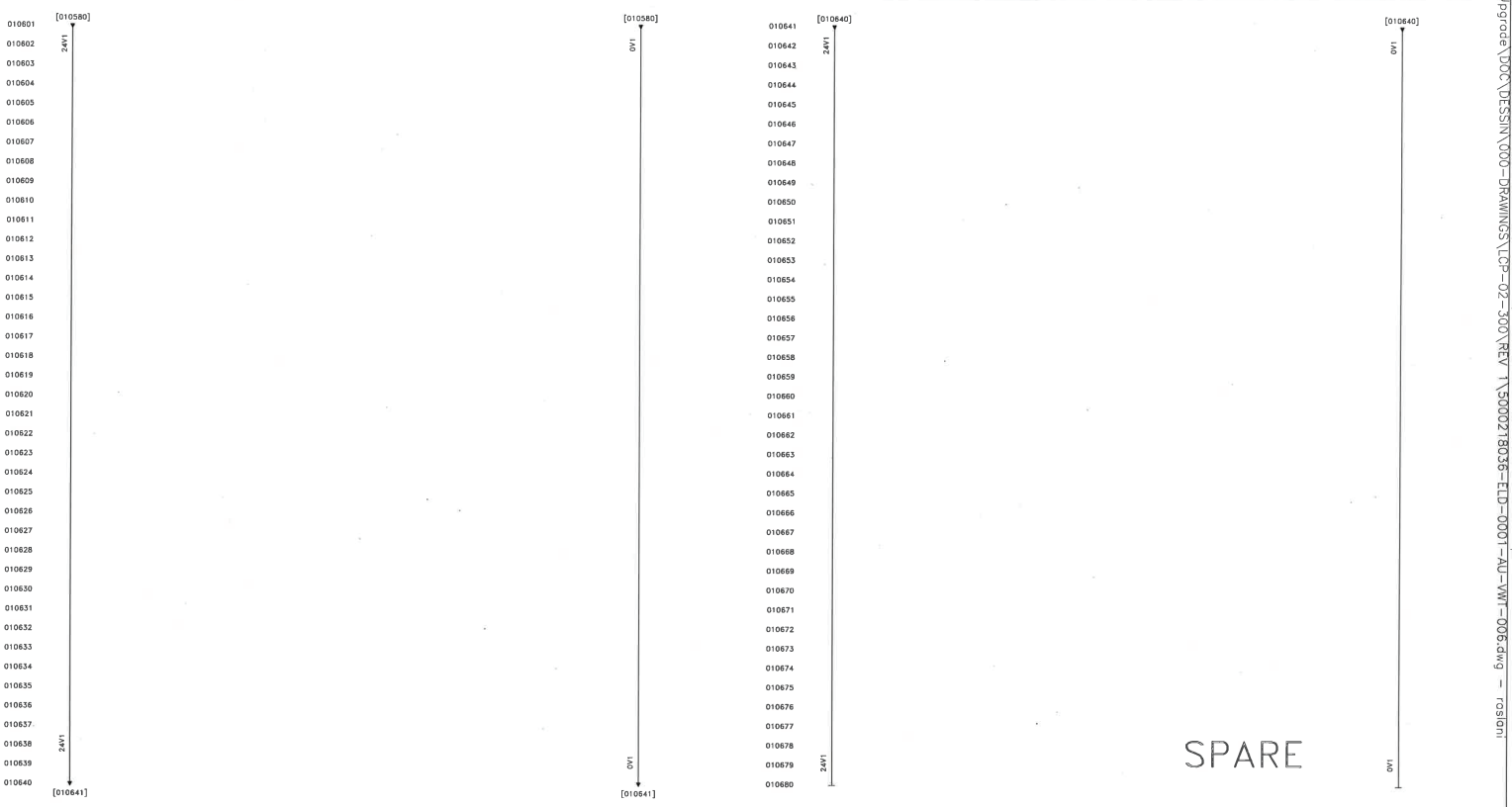


| REV | DESCRIPTION | DATE | REVD | CHKD | APVD | ECN |
|---|---|---|---|---|---|---|
| 1 | FOR APPROVAL | 2019-01-03 | HZ | RA | – | – |


CONFIDENTIALITY AND INTELLECTUAL PROPERTY NOTICE
ALL INFORMATION CONTAINED IN THIS DOCUMENT IS THE SOLE PROPERTY OF VEOLIA WATER TECHNOLOGIES CANADA INC. AND IS PROTECTED BY ALL APPLICABLE LAWS, INCLUDING BUT NOT LIMITED TO COPYRIGHT AND OTHER INTELLECTUAL PROPERTY LAWS. THE DESIGN CONCEPTS AND INFORMATION CONTAINED HEREIN ARE PROPRIETARY TO V.W.T. AND ARE SUBMITTED IN CONFIDENCE. THEY ARE NOT TRANSFERABLE. THEY MUST BE USED ONLY FOR THE PURPOSE FOR WHICH THE DOCUMENT IS EXPRESSLY SUBMITTED AND NO IMPLICIT LICENCE IS GRANTED OTHERWISE BY THE SUBMISSION OF THIS DOCUMENT. THEY ARE CONFIDENTIAL AND PRIVILEGED INFORMATION OF V.W.T. AND THEY MUST NOT BE DISCLOSED, REPRODUCED, COPIED, REMITTED OR USED IN ANY OTHER MANNER WITHOUT THE EXPRESS WRITTEN CONSENT OF V.W.T. V.W.T. ASSUMES NO RESPONSIBILITY OR LIABILITY FOR THE USE OF THIS DOCUMENT OR THE DESIGN CONCEPTS AND INFORMATION CONTAINED HEREIN FOR ANOTHER PROJECT, OR IN A MANNER THAT DOES NOT RELATE TO THE FINNESS OR PURPOSE OF THIS DOCUMENT. IN NO EVENT SHALL THIS DOCUMENT OR THE DESIGN CONCEPTS AND INFORMATION CONTAINED HEREIN BE USED IN A MANNER DETRIMENTAL TO THE INTEREST OF V.W.T. ALL COPYRIGHT, PATENT AND OTHER INTELLECTUAL PROPERTY RIGHTS ARE RESERVED. ACCEPTANCE OF THE DELIVERY OF THIS DOCUMENT CONSTITUTES AGREEMENT TO THESE TERMS AND CONDITIONS.


| DESIGNER | DATE |
|---|---|
| – | – |
| CHECKER | DATE |
| – | – |
| ENGINEER | DATE |
| – | – |
| SCALE: N/A | |

TITLE
CONTROL PANEL LCP-02-300
ELECTRICAL SCHEMATIC

CLIENT
WWTP UPGRADE
CITY OF IQALUIT

VEOLIA
VEOLIA WATER TECHNOLOGIES CANADA INC., 4105 Sartelon, Saint-Laurent, Qc, Canada, Tel: (514) 234-7230

| PROJECT | DRAWING | INTERNAL | SHEET | REV |
|---|---|---|---|---|
| 5000218036-ELD | 0001-AU-VWT | – | 06 OF 21 | 1 |

STD: "B" 11x17 REF: A6798A BAR = 1" AT PLOT SCALE

Jan 29, 2019 16:27:05 – G:\Projets A67XX\A6798A – VEOLIA – 5000218036 Iqaluit WWTP Upgrade\DOC\DESSIN\000-DRAWINGS\LCP-02-300\REV 1\5000218036-ELD-0001-AU-VWT-006.dwg – rosiani

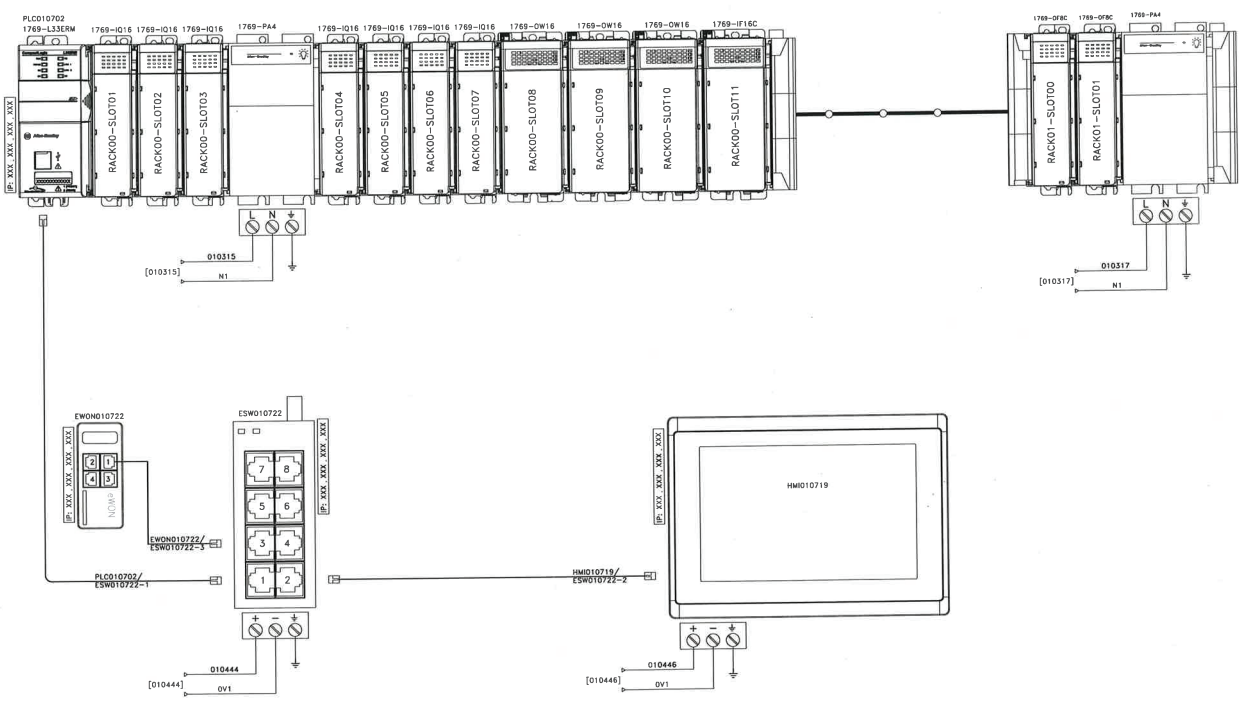


CONFIDENTIALITY AND INTELLECTUAL PROPERTY NOTICE
ALL INFORMATION CONTAINED IN THIS DOCUMENT IS THE SOLE PROPERTY OF VEOLIA WATER TECHNOLOGIES CANADA INC. AND IS PROVIDED BY ALL APPLICABLE LAW, INCLUDING BUT NOT LIMITED TO COPYRIGHT AND OTHER INTELLECTUAL PROPERTY LAWS. ALL RIGHTS ARE RESERVED. CONTAINED HEREIN ARE PROPRIETARY TO V.W.T. AND ARE SUBMITTED IN CONFIDENCE. THEY ARE NOT TRANSFERABLE. THEY MUST BE USED ONLY FOR THE PURPOSE FOR WHICH THE DOCUMENT IS EXPRESSLY SUBMITTED AND NO IMPLICIT LICENCE IS GRANTED OTHERWISE BY THE SUBMISSION OF THIS DOCUMENT. THEY ARE CONFIDENTIAL AND PRIVILEGED INFORMATION AND MUST NOT BE DISCLOSED, REPRODUCED, LOANED OR TRANSMITTED OR USED IN ANY OTHER MANNER WITHOUT THE EXPRESS WRITTEN CONSENT OF V.W.T. V.W.T. ASSUMES NO RESPONSIBILITY OR LIABILITY FOR THE USE OF THIS DOCUMENT OR THE DESIGN CONCEPTS AND INFORMATION CONTAINED HEREIN FOR ANOTHER PROJECT, OR IN A MANNER THAT DOES NOT RELATE TO THE EXPRESS PURPOSE FOR WHICH THE DOCUMENT IS SUBMITTED. ANY USE OF THESE DESIGN CONCEPTS AND INFORMATION SHALL THIS DOCUMENT BE USED IN A MANNER DETRIMENTAL TO THE INTEREST OF V.W.T. ALL COPYRIGHT, PATENT AND OTHER INTELLECTUAL PROPERTY RIGHTS ARE RESERVED. ACCEPTANCE OF THE DELIVERY OF THIS DOCUMENT CONSTITUTES AGREEMENT TO THESE TERMS AND CONDITIONS.

| REV | DESCRIPTION | DATE | REVD | CHKD | APVD | ECN |
|---|---|---|---|---|---|---|
| 1 | FOR APPROVAL | 2019-01-03 | HZ | RA | – | – |

| | | |
|---|---|---|
| DESIGNER | – | DATE – |
| CHECKER | – | DATE – |
| ENGINEER | – | DATE – |
| SCALE: | N/A | |

TITLE: CONTROL PANEL LCP-02-300
ELECTRICAL SCHEMATIC

CLIENT: WWTP UPGRADE
CITY OF IQALUIT

VEOLIA WATER TECHNOLOGIES CANADA INC. 4105 Sartelon, Saint-Laurent, Qc, Canada, Tel: (514) 334-7230

| PROJECT | DRAWING | INTERNAL | SHEET | REV |
|---|---|---|---|---|
| 5000218036-ELD | 0001-AU-VWT | – | 07 OF 21 | 1 |

STD: "B" 11x17 | REF: A67984 | BAR = 1" AT PLOT SCALE

Jan 29, 2019 16:27:05 - G:\Projets A67XX\A67984 - VEOLIA - 5000218036 Iqaluit WWTP Upgrade\DOC\DESSIN\000-DRAWINGS\LCP-02-300\REV 1\5000218036-ELD-0001-AU-VWT-007.dwg - rasiani

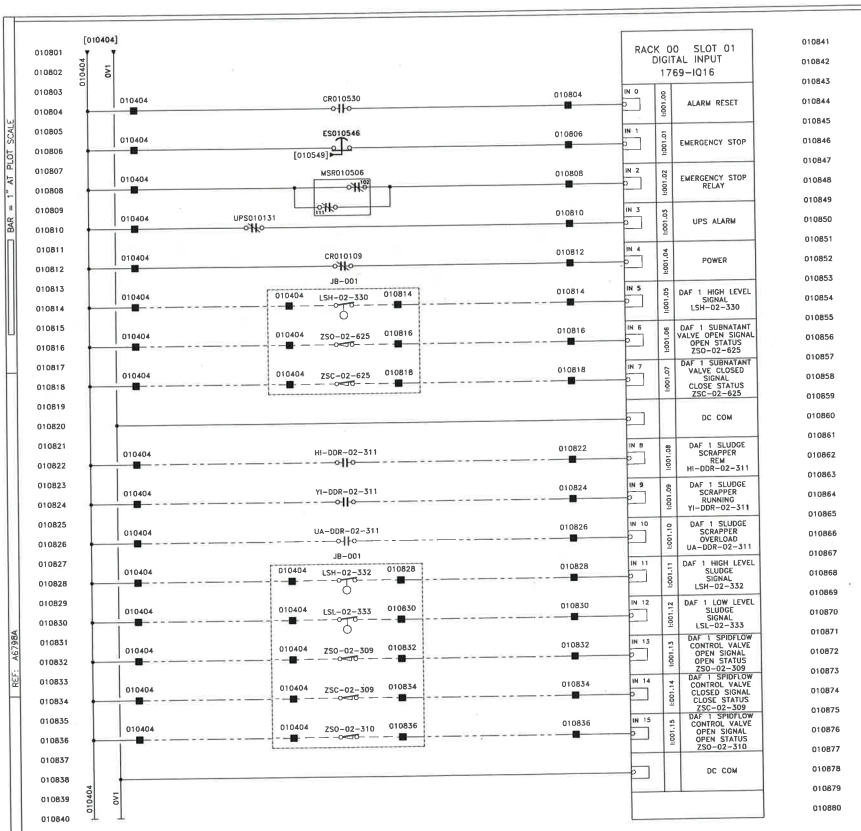


| RACK 00 SLOT 01 DIGITAL INPUT 1769-IQ16 | | |
|---|---|---|
| IN 0 | I:001.00 | ALARM RESET |
| IN 1 | I:001.01 | EMERGENCY STOP |
| IN 2 | I:001.02 | EMERGENCY STOP RELAY |
| IN 3 | I:001.03 | UPS ALARM |
| IN 4 | I:001.04 | POWER |
| IN 5 | I:001.05 | DAF 1 HIGH LEVEL SIGNAL LSH-02-330 |
| IN 6 | I:001.06 | DAF 1 SUBNATANT VALVE OPEN SIGNAL OPEN STATUS ZSO-02-625 |
| IN 7 | I:001.07 | DAF 1 SUBNATANT VALVE CLOSED SIGNAL CLOSE STATUS ZSC-02-625 |
| | | DC COM |
| IN 8 | I:001.08 | DAF 1 SLUDGE SCRAPPER REM HI-DDR-02-311 |
| IN 9 | I:001.09 | DAF 1 SLUDGE SCRAPPER RUNNING YI-DDR-02-311 |
| IN 10 | I:001.10 | DAF 1 SLUDGE SCRAPPER OVERLOAD UA-DDR-02-311 |
| IN 11 | I:001.11 | DAF 1 HIGH LEVEL SLUDGE SIGNAL LSH-02-332 |
| IN 12 | I:001.12 | DAF 1 LOW LEVEL SLUDGE SIGNAL LSL-02-333 |
| IN 13 | I:001.13 | DAF 1 SPIDFLOW CONTROL VALVE OPEN SIGNAL OPEN STATUS ZSO-02-309 |
| IN 14 | I:001.14 | DAF 1 SPIDFLOW CONTROL VALVE CLOSED SIGNAL CLOSE STATUS ZSC-02-309 |
| IN 15 | I:001.15 | DAF 1 SPIDFLOW CONTROL VALVE OPEN SIGNAL OPEN STATUS ZSO-02-310 |
| | | DC COM |

010841 010842 010843 010844 010845 010846 010847 010848 010849 010850 010851 010852 010853 010854 010855 010856 010857 010858 010859 010860 010861 010862 010863 010864 010865 010866 010867 010868 010869 010870 010871 010872 010873 010874 010875 010876 010877 010878 010879 010880

Jan 29, 2019 16:27:07 - G:\Projets A67XX\A6798A - VEOLIA - 5000218036 Iqaluit WWTP Upgrade\DOC\DESSIN\000-DRAWINGS\LCP-02-300\REV 1\5000218036-ELD-0001-AU-VWT-008.dwg - rasam

BAR = 1" AT PLOT SCALE

REF: A6798A

STD - "B" 11x17

WIRING
- - - - VEOLIA
——— CUSTOMER
——— INTERNAL WIRING

| REV | DESCRIPTION | DATE | REVD | CHKD | APVD | ECN |
|---|---|---|---|---|---|---|
| 1 | FOR APPROVAL | 2019-01-03 | HZ | RA | – | – |

CONFIDENTIALITY AND INTELLECTUAL PROPERTY NOTICE
ALL INFORMATION CONTAINED IN THIS DOCUMENT IS THE SOLE PROPERTY OF VEOLIA WATER TECHNOLOGIES CANADA INC. (V.W.T.) AND IS PROTECTED BY COPYRIGHT. THIS DOCUMENT IS ESPRIOR AND OTHER INTELLECTUAL PROPERTY LAWS. THE DESIGN CONCEPTS AND INFORMATION CONTAINED HEREIN ARE PROPRIENARY TO V.W.T AND ARE SUBMITTED IN CONFIDENCE. THEY ARE NOT TRANSFERABLE. THEY MUST BE USED ONLY FOR THE PURPOSE FOR WHICH THE DOCUMENT IS EXPRESSLY ELEMENTED AND MUST BE RETURNED AT ANY TIME IF SO DEMANDED BY THE SUBMITTER OF THIS DOCUMENT. THEY ARE OTHERWISE BY THE SUBMITTER OF THIS DOCUMENT. THEY ARE CONFIDENTIAL AND THE RECIPIENT AGREES TO MAINTAIN THEM AS SUCH. THEY MUST NOT BE DISCLOSED, REPRODUCED, LOANED, REMITTED OR USED IN ANY OTHER MANNER WITHOUT THE EXPRESS WRITTEN CONSENT OF V.W.T. V.W.T. ASSUMES NO RESPONSIBILITY OR LIABILITY FOR THE USE OF THIS DOCUMENT OR THE DESIGN CONCEPTS AND INFORMATION CONTAINED HEREIN IN CONNECTION WITH ANY OTHER PROJECT THAN THE ONE FOR WHICH IT IS PREPARED AND ISSUED BY V.W.T. IN RELATION TO THIS DOCUMENT OR THE DESIGN CONCEPTS AND INFORMATION CONTAINED HEREIN SHALL NOT BE USED IN A MANNER DETRIMENTAL TO THE INTEREST OF V.W.T. ALL COPYRIGHT, PATENT AND OTHER INTELLECTUAL PROPERTY RIGHTS ARE RESERVED. ACCEPTANCE OF THE DELIVERY OF THIS DOCUMENT CONSTITUTES AGREEMENT TO THESE TERMS AND CONDITIONS.

| | | DATE |
|---|---|---|
| DESIGNER | – | – |
| CHECKER | – | – |
| ENGINEER | – | – |
| SCALE: | N/A | |

TITLE: CONTROL PANEL LCP-02-300
ELECTRICAL SCHEMATIC

CLIENT: WWTP UPGRADE
CITY OF IQALUIT

VEOLIA
VEOLIA WATER TECHNOLOGIES CANADA INC. 4760 Sartelon, Saint-Laurent, Qc, Canada, Tel (514) 334-7730

| PROJECT | DRAWING | INTERNAL | SHEET | REV |
|---|---|---|---|---|
| 5000218036-ELD | 0001-AU-VWT | – | 08 OF 21 | 1 |

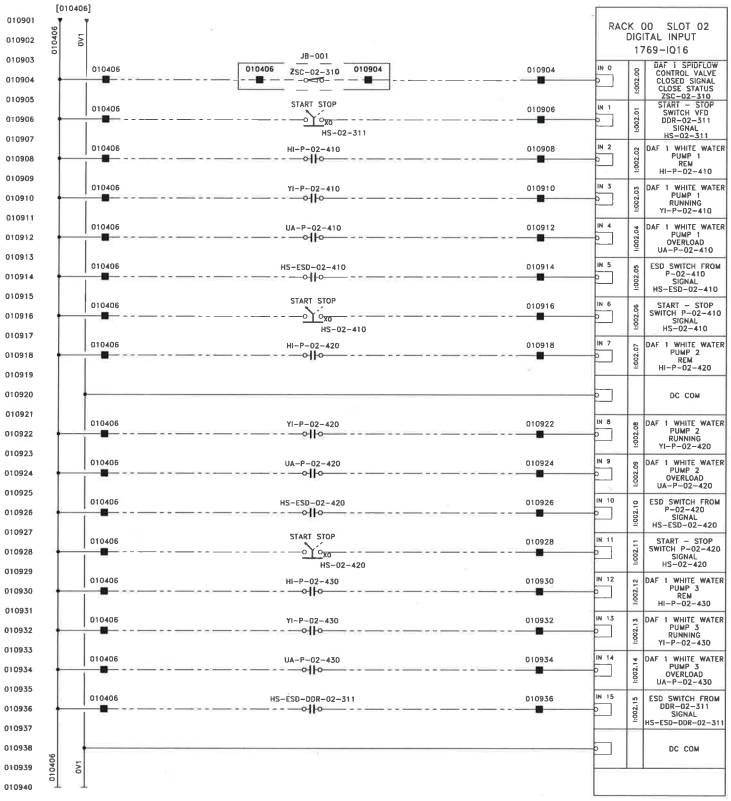


WIRING
VEOLIA
CUSTOMER
INTERNAL WIRING

| REV | DESCRIPTION | DATE | REVD | CHKD | APVD | ECN |
|---|---|---|---|---|---|---|
| 1 | FOR APPROVAL | 2019-01-03 | HZ | RA | – | – |

CONFIDENTIALITY AND INTELLECTUAL PROPERTY NOTICE
ALL INFORMATION CONTAINED IN THIS DOCUMENT IS THE SOLE PROPERTY OF VEOLIA WATER TECHNOLOGIES CANADA INC. AND IS PROTECTED BY ALL APPLICABLE LAWS, INCLUDING BUT NOT LIMITED TO COPYRIGHT AND OTHER INTELLECTUAL PROPERTY LAWS. THE DESIGN CONCEPTS AND INFORMATION CONTAINED HEREIN ARE PROPRIETARY TO V.W.T. AND ARE SUBMITTED IN CONFIDENCE. THIS DOCUMENT AND THE INFORMATION IT CONTAINS MUST BE USED ONLY FOR THE PURPOSE FOR WHICH THE DOCUMENT IS EXPRESSLY SUBMITTED AND NO IMPLICIT LICENCE IS GRANTED OTHERWISE BY THE SUBMISSION OF THIS DOCUMENT. THEY ARE CONFIDENTIAL AND PRIVILEGED INFORMATION OF V.W.T. AND THEY MUST NOT BE DISCLOSED, REPRODUCED, LOANED, REWRITTEN OR USED IN ANY OTHER MANNER WITHOUT THE EXPRESS WRITTEN CONSENT OF V.W.T. AND THEY MUST NOT BE USED IN WHOLE OR IN PART FOR THE USE OF THIS DOCUMENT OR THE DESIGN CONCEPTS AND INFORMATION CONTAINED HEREIN FOR ANOTHER PROJECT, OR IN A MANNER THAT DOES NOT RELATE TO THE INTENT OR PURPOSE OF THIS DOCUMENT. IN NO EVENT SHALL THIS DOCUMENT OR THE DESIGN CONCEPTS AND INFORMATION CONTAINED HEREIN BE USED FOR THE BENEFIT OF THIRD PARTIES WITHOUT THE EXPRESS WRITTEN CONSENT OF V.W.T. ALL COPYRIGHT, MORAL AND OTHER INTELLECTUAL PROPERTY RIGHTS ARE RESERVED. ACCEPTANCE OF THE DELIVERY OF THIS DOCUMENT CONSTITUTES AGREEMENT TO THESE TERMS AND CONDITIONS.

| | | DATE |
|---|---|---|
| DESIGNER | – | – |
| CHECKER | – | – |
| ENGINEER | – | – |
| SCALE: | N/A | |

TITLE: CONTROL PANEL LCP-02-300
ELECTRICAL SCHEMATIC

CLIENT: WWTP UPGRADE
CITY OF IQALUIT

VEOLIA
VEOLIA WATER TECHNOLOGIES CANADA INC., 4105 Sartelon Saint-Laurent, Qc. Canada, Tel: (514) 334-7230

| PROJECT | DRAWING | INTERNAL | SHEET | REV |
|---|---|---|---|---|
| 5000218036-ELD – 0001-AU-VWT | | – | 09 OF 21 | 1 |

STD: "B" 11x17 REF: A6798A BAR = 1" AT PLOT SCALE

Jan 29, 2019 16:27:08 – G:\Projets A67XX\A6798A – VEOLIA – 5000218036 Iqaluit WWTP Upgrade\DOC\DESSIN\000-DRAWINGS\LCP-02-300\REV 1\5000218036-ELD-0001-AU-VWT-009.dwg – rasloni

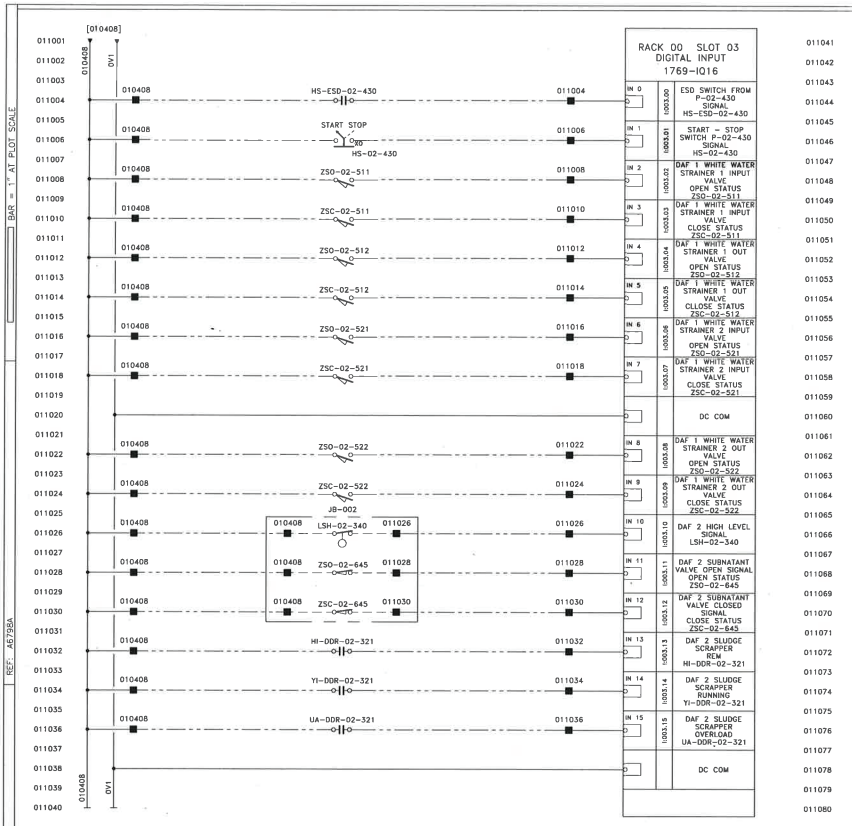


BAR = 1" AT PLOT SCALE

REF: A6798A

STD: "B" 11x17

WIRING
VEOLIA
CUSTOMER
INTERNAL WIRING

| REV | DESCRIPTION | DATE | REVD | CHKD | APVD | ECN |
|---|---|---|---|---|---|---|
| 1 | FOR APPROVAL | 2019-01-03 | HZ | RA | – | – |

CONFIDENTIALITY AND INTELLECTUAL PROPERTY NOTICE
ALL INFORMATION CONTAINED IN THIS DOCUMENT IS THE SOLE PROPERTY OF VEOLIA WATER TECHNOLOGIES CANADA INC. AND IS PROTECTED BY ALL APPLICABLE LAWS, INCLUDING BUT NOT LIMITED TO COPYRIGHT AND OTHER INTELLECTUAL PROPERTY LAWS. THE DESIGN CONCEPTS AND INFORMATION CONTAINED HEREIN ARE PROPRIETARY TO V.W.T. AND ARE SUBMITTED IN CONFIDENCE. THEY ARE NOT TRANSFERABLE. THEY SHALL NOT BE USED IN WHOLE OR IN PART FOR ANY PURPOSE WHICH IS EXPRESSLY SUBMITTED AND HAS NOT BEEN LICENCED IN COMMITTED OTHERWISE BY THE SUBMISSION OF THIS DOCUMENT, THEY ARE CONFIDENTIAL AND PRIVILEGED INFORMATION OF V.W.T. AND THEY MUST NOT BE DISCLOSED, REPRODUCED, LOANED, REMITTED OR USED IN ANY OTHER MANNER WITHOUT THE EXPRESS WRITTEN CONSENT OF V.W.T. V.W.T. ASSUMES NO RESPONSIBILITY OR LIABILITY FOR THE USE OF THIS DOCUMENT, IN WHOLE OR IN PART, IN CONTEXTS OR FOR PURPOSES NOT INTENDED BY V.W.T. OR FOR ANY USE OF THE DESIGN CONCEPTS HEREIN FOR ANOTHER PROJECT, OR IN A MANNER THAT DOES NOT RELATE TO THE FITNESS OR PURPOSE OF THIS DOCUMENT. IN NO EVENT SHALL THIS DOCUMENT OR THE DESIGN CONCEPTS AND INFORMATION CONTAINED HEREIN BE USED IN A MANNER DETRIMENTAL TO THE INTEREST OF V.W.T. ALL COPYRIGHT, PATENT AND OTHER INTELLECTUAL PROPERTY RIGHTS ARE RESERVED. ACCEPTANCE OF THE DELIVERY OF THIS DOCUMENT CONSTITUTES AGREEMENT TO THESE TERMS AND CONDITIONS.

| | |
|---|---|
| DESIGNER | DATE – – |
| CHECKER | DATE – – |
| ENGINEER | DATE – – |
| SCALE: | N/A |

TITLE
CONTROL PANEL LCP-02-300
ELECTRICAL SCHEMATIC

CLIENT
WWTP UPGRADE
CITY OF IQALUIT

VEOLIA
VEOLIA WATER TECHNOLOGIES CANADA INC. 4105 Sartelon, Saint-Laurent, Qc, Canada, Tel.: (514) 334-7230

| PROJECT | DRAWING | INTERNAL | SHEET | REV |
|---|---|---|---|---|
| 5000218036-ELD – 0001-AU-VWT | | – | 10 OF 21 | 1 |

Jan 29, 2019 16:27:09 – G:\Projets A67XX\A6798A – VEOLIA – 5000218036 Iqaluit WWTP Upgrade\DOC\DESSIN\000-DRAWINGS\LCP-02-300\REV 1\5000218036-ELD-0001-AU-VWT-010.dwg – rosiani

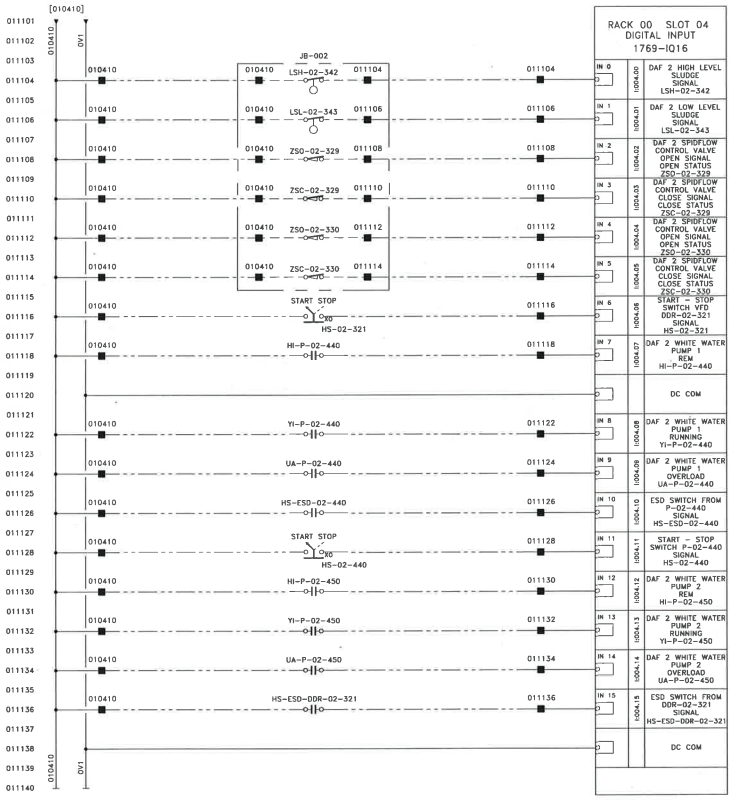


BAR = 1" AT PLOT SCALE

REF: A6798A

STD. "B" 11x17

WIRING
VEOLIA
CUSTOMER
INTERNAL WIRING

| REV | DESCRIPTION | DATE | REVD | CHKD | APVD | ECN |
|---|---|---|---|---|---|---|
| 1 | FOR APPROVAL | 2019-01-03 | HZ | RA | – | – |

CONFIDENTIALITY AND INTELLECTUAL PROPERTY NOTICE
ALL INFORMATION CONTAINED IN THIS DOCUMENT IS THE SOLE PROPERTY OF VEOLIA WATER TECHNOLOGIES CANADA INC. AND IS PROTECTED BY ALL APPLICABLE LAWS, INCLUDING BUT NOT LIMITED TO COPYRIGHT LAWS. ANY DESIGN CONCEPTS, DESIGN DETAILS AND INFORMATION CONTAINED HEREIN ARE PROPRIETARY TO V.W.T. AND ARE SUBMITTED IN CONFIDENCE. THEY ARE NOT TRANSFERABLE. THEY MUST BE USED ONLY FOR THE PURPOSE FOR WHICH THE DOCUMENT IS EXPRESSLY SUBMITTED AND NO IMPLICIT LICENCE IS GRANTED HEREBY. THIS DOCUMENT AND ITS CONTENTS SHALL REMAIN CONFIDENTIAL AND PRIVILEGED INFORMATION OF V.W.T. AND THEY MUST NOT BE DISCLOSED, REPRODUCED, LOANED, REMITTED OR USED IN ANY OTHER MANNER WITHOUT THE EXPRESS WRITTEN CONSENT OF V.W.T. V.W.T. ASSUMES NO RESPONSIBILITY OR LIABILITY FOR THE USE OF THIS DOCUMENT OR THE DESIGN CONCEPTS AND INFORMATION CONTAINED HEREIN FOR ANOTHER PROJECT, OR IN A MANNER THAT DOES NOT FULLY COMPLY WITH THE TERMS AND CONDITIONS OF THE CONTRACT. SHALL THIS DOCUMENT OR THE DESIGN CONCEPTS AND INFORMATION CONTAINED HEREIN BE USED IN A MANNER DETRIMENTAL TO THE INTEREST OF V.W.T. ALL COPYRIGHT, PATENT AND OTHER INTELLECTUAL PROPERTY RIGHTS ARE RESERVED. ACCEPTANCE OF THE DELIVERY OF THIS DOCUMENT CONSTITUTES AGREEMENT TO THESE TERMS AND CONDITIONS.

| | | DATE |
|---|---|---|
| DESIGNER | – | – |
| CHECKER | – | – |
| ENGINEER | – | – |
| SCALE: | N/A | |

TITLE: CONTROL PANEL LCP-02-300
ELECTRICAL SCHEMATIC

CLIENT: WWTP UPGRADE
CITY OF IQALUIT

VEOLIA
VEOLIA WATER TECHNOLOGIES CANADA INC. 4105 Sartelon Saint-Laurent Qc Canada, Tel: (514) 334-7238

| PROJECT DRAWING | INTERNAL | SHEET | REV |
|---|---|---|---|
| 5000218036-ELD – 0001-AU-VWT | – | 11 OF 21 | 1 |

Jan 29, 2019 - 16:27:10 - G:\Projets A67XX\A6798A - VEOLIA - 5000218036 Iqaluit WWTP Upgrade\DOC\DESSIN\000-DRAWINGS\LCP-02-300\REV 1\5000218036-ELD-0001-AU-VWT-011.dwg - rosiani

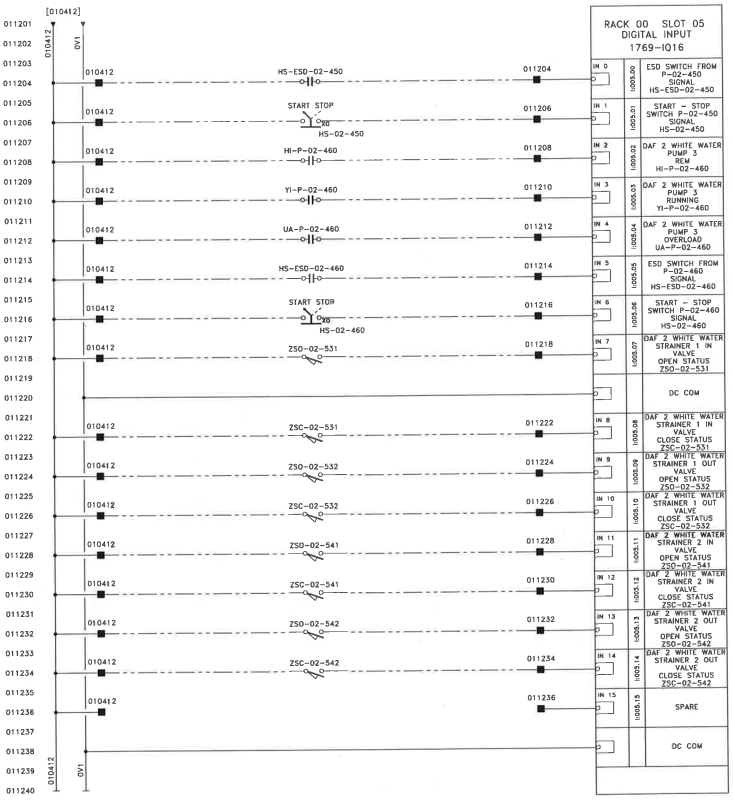


| RACK 00 SLOT 05 DIGITAL INPUT 1769-IQ16 | | |
|---|---|---|
| IN 0 | I:005.00 | ESD SWITCH FROM P-02-450 SIGNAL HS-ESD-02-450 |
| IN 1 | I:005.01 | START – STOP SWITCH P-02-450 SIGNAL HS-02-450 |
| IN 2 | I:005.02 | DAF 2 WHITE WATER PUMP 3 REM HI-P-02-460 |
| IN 3 | I:005.03 | DAF 2 WHITE WATER PUMP 3 RUNNING YI-P-02-460 |
| IN 4 | I:005.04 | DAF 2 WHITE WATER PUMP 3 OVERLOAD UA-P-02-460 |
| IN 5 | I:005.05 | ESD SWITCH FROM P-02-460 SIGNAL HS-ESD-02-460 |
| IN 6 | I:005.06 | START – STOP SWITCH P-02-460 SIGNAL HS-02-460 |
| IN 7 | I:005.07 | DAF 2 WHITE WATER STRAINER 1 IN VALVE OPEN STATUS ZSO-02-531 |
| | | DC COM |
| IN 8 | I:005.08 | DAF 2 WHITE WATER STRAINER 1 IN VALVE CLOSE STATUS ZSC-02-531 |
| IN 9 | I:005.09 | DAF 2 WHITE WATER STRAINER 1 OUT VALVE OPEN STATUS ZSO-02-532 |
| IN 10 | I:005.10 | DAF 2 WHITE WATER STRAINER 1 OUT VALVE CLOSE STATUS ZSC-02-532 |
| IN 11 | I:005.11 | DAF 2 WHITE WATER STRAINER 2 IN VALVE OPEN STATUS ZSO-02-541 |
| IN 12 | I:005.12 | DAF 2 WHITE WATER STRAINER 2 IN VALVE CLOSE STATUS ZSC-02-541 |
| IN 13 | I:005.13 | DAF 2 WHITE WATER STRAINER 2 OUT VALVE OPEN STATUS ZSO-02-542 |
| IN 14 | I:005.14 | DAF 2 WHITE WATER STRAINER 2 OUT VALVE CLOSE STATUS ZSC-02-542 |
| IN 15 | I:005.15 | SPARE |
| | | DC COM |

011241 011242 011243 011244 011245 011246 011247 011248 011249 011250 011251 011252 011253 011254 011255 011256 011257 011258 011259 011260 011261 011262 011263 011264 011265 011266 011267 011268 011269 011270 011271 011272 011273 011274 011275 011276 011277 011278 011279 011280

BAR = 1" AT PLOT SCALE

REF: A6798A

STD: "B" 11x17

WIRING

VEOLIA

CUSTOMER

INTERNAL WIRING

| REV | DESCRIPTION | DATE | REVD | CHKD | APVD | ECN |
|---|---|---|---|---|---|---|
| 1 | FOR APPROVAL | 2019-01-03 | HZ | RA | – | – |

CONFIDENTIALITY AND INTELLECTUAL PROPERTY NOTICE
THIS WRITTEN INFORMATION CONTAINED IN THIS DOCUMENT IS THE SOLE PROPERTY OF VEOLIA WATER TECHNOLOGIES CANADA INC. AND IS PROTECTED BY ALL APPLICABLE LAWS, INCLUDING BUT NOT LIMITED TO COPYRIGHT AND OTHER INTELLECTUAL PROPERTY LAWS. THE DESIGN CONCEPTS AND INFORMATION CONTAINED HEREIN ARE PROPRIETARY TO V.W.T. AND ARE SUBMITTED IN CONFIDENCE. THEY ARE NOT TRANSFERABLE AND MUST BE USED ONLY FOR THE PURPOSE FOR WHICH THEY WERE SUBMITTED. NO LICENSE, EXPRESS OR IMPLIED, UNDER ANY PATENT LICENCE IS GRANTED OR IMPLIED BY THE SUBMISSION OF THIS DOCUMENT. THEY ARE CONFIDENTIAL AND PRIVILEGED INFORMATION OF V.W.T. AND THEY MUST NOT BE DISCLOSED, REPRODUCED, LOANED, MODIFIED OR USED IN ANY OTHER MANNER WITHOUT THE EXPRESS WRITTEN CONSENT OF V.W.T. AND UPON REQUEST TO RETURN THEM TO V.W.T. IN THE EVENT THAT DESIGNS AND DESIGN CONCEPTS AND INFORMATION CONTAINED HEREIN FOR ANOTHER PROJECT, OR IN A MANNER THAT DOES NOT RELATE TO THE FITNESS OR PURPOSE OF THIS DOCUMENT. IN NO EVENT SHALL THIS DOCUMENT OR THE DESIGN CONCEPTS AND INFORMATION CONTAINED HEREIN BE USED IN A MANNER DETRIMENTAL TO THE INTEREST OF V.W.T. ALL COPYRIGHT, PATENT AND OTHER INTELLECTUAL PROPERTY RIGHTS ARE RESERVED. ACCEPTANCE OF THE DESIGNS IN THIS DOCUMENT CONSTITUTES AGREEMENT TO THESE TERMS AND CONDITIONS.

| | |
|---|---|
| DESIGNER | DATE |
| – | – |
| CHECKER | DATE |
| – | – |
| ENGINEER | DATE |
| – | – |
| SCALE: | N/A |

TITLE
CONTROL PANEL LCP-02-300
ELECTRICAL SCHEMATIC

CLIENT
WWTP UPGRADE
CITY OF IQALUIT

VEOLIA
VEOLIA WATER TECHNOLOGIES CANADA INC. 4105 Sartelon Saint-Laurent, Qc. Canada. Tel (514) 334-7230

| PROJECT | DRAWING | INTERNAL | SHEET | REV |
|---|---|---|---|---|
| 5000218036-ELD | 0001-AU-VWT | – | 12 OF 21 | 1 |

Jan 29, 2019 16:27:10 – G:\Projets A67XX\A6798A – VEOLIA – 5000218036 Iqaluit WWTP Upgrade\DOC\DESSIN\000-DRAWINGS\LCP-02-300\REV 1\5000218036-ELD-0001-AU-VWT-012.dwg – rsalani

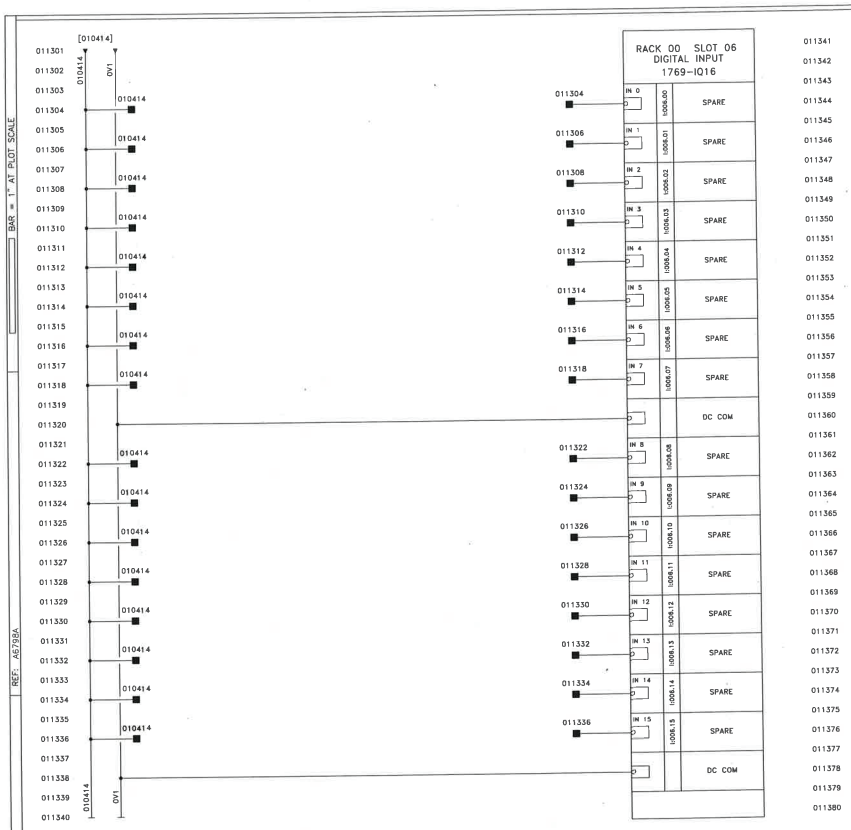


BAR = 1" AT PLOT SCALE

REF: A6798A

STD: "B" 11x17

| WIRING |
|---|
| VEOLIA |
| CUSTOMER |
| INTERNAL WIRING |

| REV | DESCRIPTION | DATE | REVD | CHKD | APVD | ECN |
|---|---|---|---|---|---|---|
| 1 | FOR APPROVAL | 2019-01-03 | HZ | RA | – | – |


CONFIDENTIALITY AND INTELLECTUAL PROPERTY NOTICE
ALL INFORMATION CONTAINED IN THIS DOCUMENT IS THE SOLE PROPERTY OF VEOLIA WATER TECHNOLOGIES CANADA INC. AND IS PROTECTED BY ALL APPLICABLE LAWS, INCLUDING BUT NOT LIMITED TO COPYRIGHT AND OTHER INTELLECTUAL PROPERTY LAWS. THE DESIGN CONCEPTS AND INFORMATION CONTAINED HEREIN ARE PROPRIETARY TO V.W.T. AND ARE SUBMITTED IN CONFIDENCE. THEY ARE NOT TRANSFERABLE. THEY MUST BE USED ONLY FOR THE PURPOSE FOR WHICH THE DOCUMENT IS EXPRESSLY SUBMITTED AND NO IMPLICIT LICENCE IS GRANTED OTHERWISE BY THE SUBMISSION OF THIS DOCUMENT. THEY ARE CONFIDENTIAL AND PROPRIETARY INFORMATION OF V.W.T. AND THEY MUST NOT BE DISCLOSED, REPRODUCED, LOANED, REMITTED OR USED IN ANY OTHER MANNER WITHOUT THE EXPRESS WRITTEN CONSENT OF V.W.T. V.W.T. ASSUMES NO RESPONSIBILITY OR LIABILITY FOR THE USE OF THIS DOCUMENT OR THE DESIGN CONCEPTS AND INFORMATION CONTAINED HEREIN FOR ANOTHER PROJECT, OR IN A MANNER THAT DOES NOT RELATE TO THE FITNESS OR PURPOSE OF THIS DOCUMENT. IN NO EVENT SHALL THIS DOCUMENT OR THE DESIGN CONCEPTS AND INFORMATION CONTAINED HEREIN BE USED IN A MANNER DETRIMENTAL TO THE INTEREST OF V.W.T. ALL COPYRIGHT, PATENT AND OTHER INTELLECTUAL PROPERTY RIGHTS ARE RESERVED. ACCEPTANCE OF THE DELIVERY OF THIS DOCUMENT CONSTITUTES AGREEMENT TO THESE TERMS AND CONDITIONS.


| DESIGNER | DATE |
|---|---|
| – | – |
| CHECKER | DATE |
| – | – |
| ENGINEER | DATE |
| – | – |
| SCALE: N/A | |

TITLE
CONTROL PANEL LCP-02-300
ELECTRICAL SCHEMATIC

CLIENT
WWTP UPGRADE
CITY OF IQALUIT

VEOLIA


VEOLIA WATER TECHNOLOGIES CANADA INC. 4195 Sartelon, Saint-Laurent, Qc. Canada. Tel: (514) 334-7230


| PROJECT | DRAWING | INTERNAL | SHEET | REV |
|---|---|---|---|---|
| 5000218036-ELD | 0001-AU-VWT | – | 13 OF 21 | 1 |

Jan 29, 2019 16:27:12 – G:\Projets A67XX\A6798A – VEOLIA – 5000218036 Iqaluit WWTP Upgrade\DOC\DESSIN\000-DRAWINGS\LCP-02-300\REV 1\5000218036-ELD-0001-AU-VWT-013.dwg – rastani

Jan 29, 2019 16:27:13 - C:\Projets A67XX\A6798A - VEOLIA - 5000218036 Iqaluit WWTP Upgrade\DOCUMENTS\DESIGN\000-DRAWINGS\LCP-02-300\REV 1\5000218036-ELD-0001-AU-VW1-014.dwg - rasion

BAR = 1" AT PLOT SCALE

REF: A6798A

SIZE: "B" 11x17

[010416]

| | | | |
|---|---|---|---|
| 011401 | 010416 | 0V1 | |
| 011402 | | | |
| 011403 | | | |
| 011404 | | | 010416 |
| 011405 | | | |
| 011406 | | | 010416 |
| 011407 | | | |
| 011408 | | | 010416 |
| 011409 | | | |
| 011410 | | | 010416 |
| 011411 | | | |
| 011412 | | | 010416 |
| 011413 | | | |
| 011414 | | | 010416 |
| 011415 | | | |
| 011416 | | | 010416 |
| 011417 | | | |
| 011418 | | | 010416 |
| 011419 | | | |
| 011420 | | | |
| 011421 | | | |
| 011422 | | | 010416 |
| 011423 | | | |
| 011424 | | | 010416 |
| 011425 | | | |
| 011426 | | | 010416 |
| 011427 | | | |
| 011428 | | | 010416 |
| 011429 | | | |
| 011430 | | | 010416 |
| 011431 | | | |
| 011432 | | | 010416 |
| 011433 | | | |
| 011434 | | | 010416 |
| 011435 | | | |
| 011436 | | | 010416 |
| 011437 | | | |
| 011438 | | | |
| 011439 | 010416 | 0V1 | |
| 011440 | | | |

RACK 00 SLOT 07
DIGITAL INPUT
1769-IQ16

| | | | |
|---|---|---|---|
| 011404 | IN 0 | I:007.00 | SPARE |
| 011406 | IN 1 | I:007.01 | SPARE |
| 011408 | IN 2 | I:007.02 | SPARE |
| 011410 | IN 3 | I:007.03 | SPARE |
| 011412 | IN 4 | I:007.04 | SPARE |
| 011414 | IN 5 | I:007.05 | SPARE |
| 011416 | IN 6 | I:007.06 | SPARE |
| 011418 | IN 7 | I:007.07 | SPARE |
| | | | DC COM |
| 011422 | IN 8 | I:007.08 | SPARE |
| 011424 | IN 9 | I:007.09 | SPARE |
| 011426 | IN 10 | I:007.10 | SPARE |
| 011428 | IN 11 | I:007.11 | SPARE |
| 011430 | IN 12 | I:007.12 | SPARE |
| 011432 | IN 13 | I:007.13 | SPARE |
| 011434 | IN 14 | I:007.14 | SPARE |
| 011436 | IN 15 | I:007.15 | SPARE |
| | | | DC COM |

011441 011442 011443 011444 011445 011446 011447 011448 011449 011450 011451 011452 011453 011454 011455 011456 011457 011458 011459 011460 011461 011462 011463 011464 011465 011466 011467 011468 011469 011470 011471 011472 011473 011474 011475 011476 011477 011478 011479 011480

WIRING

- VEOLIA
- CUSTOMER
- INTERNAL WIRING

| REV | DESCRIPTION | DATE | REVD | CHKD | APVD | ECN |
|---|---|---|---|---|---|---|
| 1 | FOR APPROVAL | 2019-01-03 | SG | RA | – | – |

CONFIDENTIALITY AND INTELLECTUAL PROPERTY NOTICE
ALL INFORMATION CONTAINED IN THIS DOCUMENT IS THE SOLE PROPERTY OF VEOLIA WATER TECHNOLOGIES CANADA INC. AND/OR ITS AFFILIATES AND, INCLUDING BUT NOT LIMITED TO COPYRIGHT AND OTHER INTELLECTUAL PROPERTY LAWS. THE DESIGN CONCEPTS AND INFORMATION CONTAINED HEREIN ARE PROPRIETARY TO VWT AND ARE SUBMITTED IN CONFIDENCE. THEY ARE NOT TRANSFERRED. THEY MUST BE USED ONLY FOR THE PURPOSE FOR WHICH THIS DOCUMENT IS EXPRESSLY SUBMITTED AND NO OTHER LICENCE IS GRANTED. IF THERE IS NO WRITTEN AGREEMENT OF THIS DOCUMENT, THEY ARE CONFIDENTIAL AND PRIVILEGED INFORMATION OF VWT AND THEY MUST NOT BE DISCLOSED, REPRODUCED, LOANED, REMITTED OR USED IN ANY OTHER MANNER WITHOUT THE EXPRESS WRITTEN CONSENT OF VWT. VWT ASSUMES NO RESPONSIBILITY OR LIABILITY FOR THE USE OF THIS DOCUMENT OR CONCEPTS, INFORMATION CONTAINED HEREIN OR DERIVED HEREFROM IN WHOLE OR IN PART, OR IN A MANNER THAT DOES NOT CONFORM TO THE FITNESS OR PURPOSE OF THIS DOCUMENT. IN NO EVENT SHALL THIS DOCUMENT OR THE DESIGN CONCEPTS AND INFORMATION CONTAINED HEREIN BE USED IN A MANNER DETRIMENTAL TO THE INTEREST OF VWT. ALL COPYRIGHT, PATENT AND OTHER INTELLECTUAL PROPERTY RIGHTS ARE RESERVED. ACCEPTANCE OF THE DELIVERY OF THIS DOCUMENT CONSTITUTES AGREEMENT TO THESE TERMS AND CONDITIONS.

| | | |
|---|---|---|
| DESIGNER | – | DATE – |
| CHECKER | – | DATE – |
| ENGINEER | – | DATE – |
| SCALE: | N/A | |

TITLE: CONTROL PANEL LCP-02-300
ELECTRICAL SCHEMATIC

CLIENT: WWTP UPGRADE
CITY OF IQALUIT

VEOLIA

VEOLIA WATER TECHNOLOGIES CANADA INC. 4105 Sartelon, Saint-Laurent, Qc, Canada, Tel: (514) 334-7230

| PROJECT | DRAWING | INTERNAL | SHEET | REV |
|---|---|---|---|---|
| 5000218036-ELD | 0001-AU-VWT | – | 14 OF 22 | 5 |

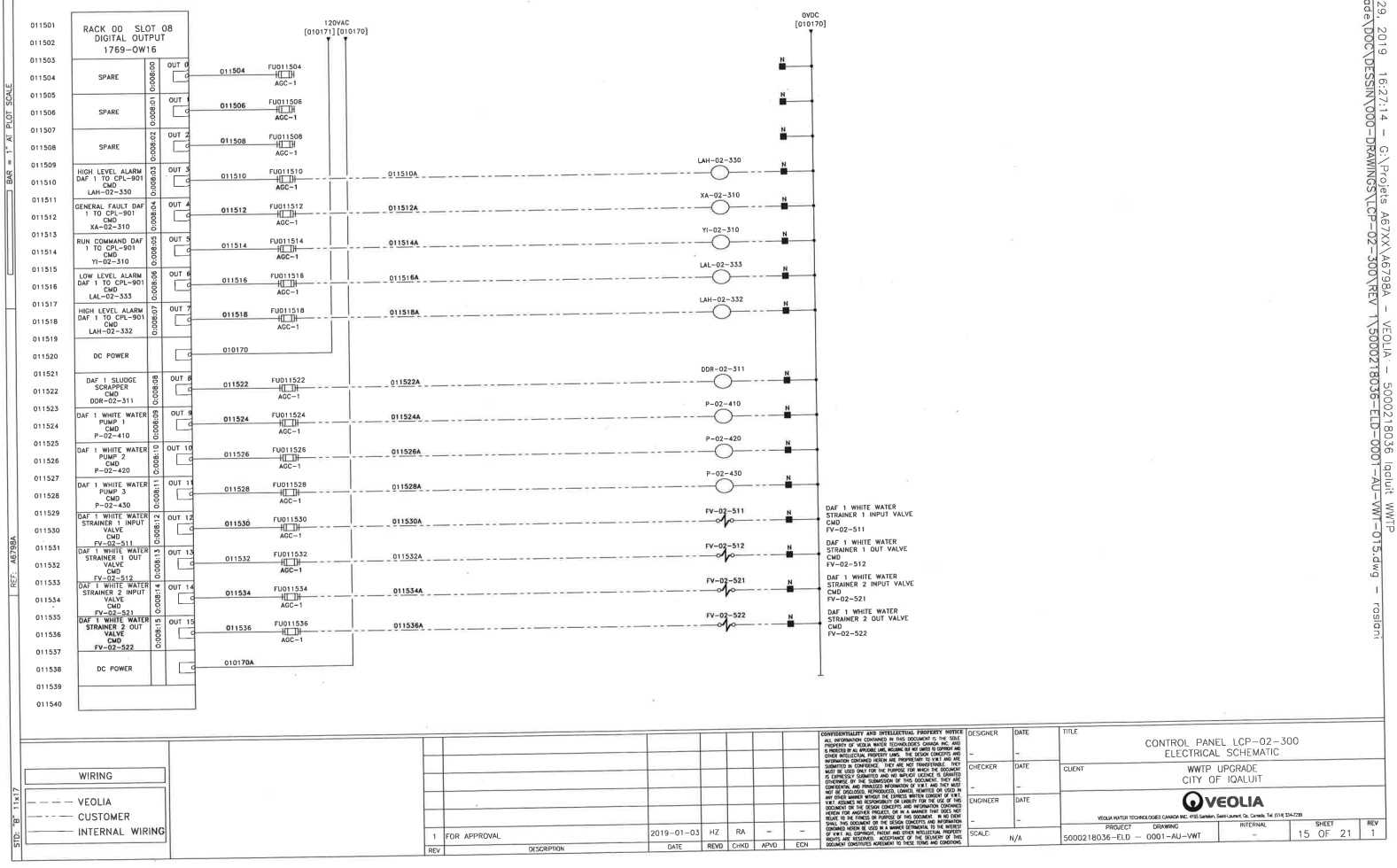


WIRING

VEOLIA

CUSTOMER

INTERNAL WIRING

| REV | DESCRIPTION | DATE | DESIGNED | CHKD | APVD | ECN |
|---|---|---|---|---|---|---|
| 1 | FOR APPROVAL | 2019-01-03 | HZ | RA | – | – |

CONFIDENTIALITY AND INTELLECTUAL PROPERTY NOTICE
ALL INFORMATION CONTAINED IN THIS DOCUMENT IS THE SOLE PROPERTY OF VEOLIA WATER TECHNOLOGIES CANADA INC. (VWT) AND SHALL NOT BE USED, RELEASE OR LICENSED BY VWT TO ANY THIRD PARTY WITHOUT THE EXPRESS WRITTEN CONSENT OF VWT. ANY USE, RELEASE OR LICENSE OF THIS DOCUMENT OR THE DESIGN CONCEPTS AND INFORMATION CONTAINED HEREIN IN A MANNER THAT DOES NOT FULLY RESPECT THE RIGHTS OF VWT IS STRICTLY PROHIBITED. IN NO EVENT SHALL THIS DOCUMENT OR THE DESIGN CONCEPTS AND INFORMATION CONTAINED HEREIN BE USED IN A MANNER DETRIMENTAL TO THE INTEREST OF VWT. ALL COPYRIGHT, PATENT AND OTHER INTELLECTUAL PROPERTY RIGHTS ARE RESERVED. ACCEPTANCE OF THE DELIVERY OF THIS DOCUMENT CONSTITUTES AGREEMENT TO THESE TERMS AND CONDITIONS.

| | | |
|---|---|---|
| DESIGNER | – | DATE – |
| CHECKER | – | DATE – |
| ENGINEER | – | DATE – |
| SCALE: | N/A | |

TITLE: CONTROL PANEL LCP-02-300
ELECTRICAL SCHEMATIC

CLIENT: WWTP UPGRADE
CITY OF IQALUIT

VEOLIA
VEOLIA WATER TECHNOLOGIES CANADA INC. 4105 Sartelon, Saint-Laurent, Qc, Canada, Tel: (514) 334-7230

| PROJECT | DRAWING | INTERNAL | SHEET | REV |
|---|---|---|---|---|
| 5000218036-ELD | 0001-AU-VWT | – | 15 OF 21 | 1 |

REF: A6798A

STD: "B" 11x17

BAR = 1" AT PLOT SCALE

Jan 29, 2019 16:27:14 - G:\Projets A67XX\A6798A - VEOLIA - 5000218036 Iqaluit WWTP Upgrade\DOCUMENTS\DESIGN\000-DRAWINGS\LCP-02-300\REV 1\5000218036-ELD-0001-AU-VWT-015.dwg - rosan

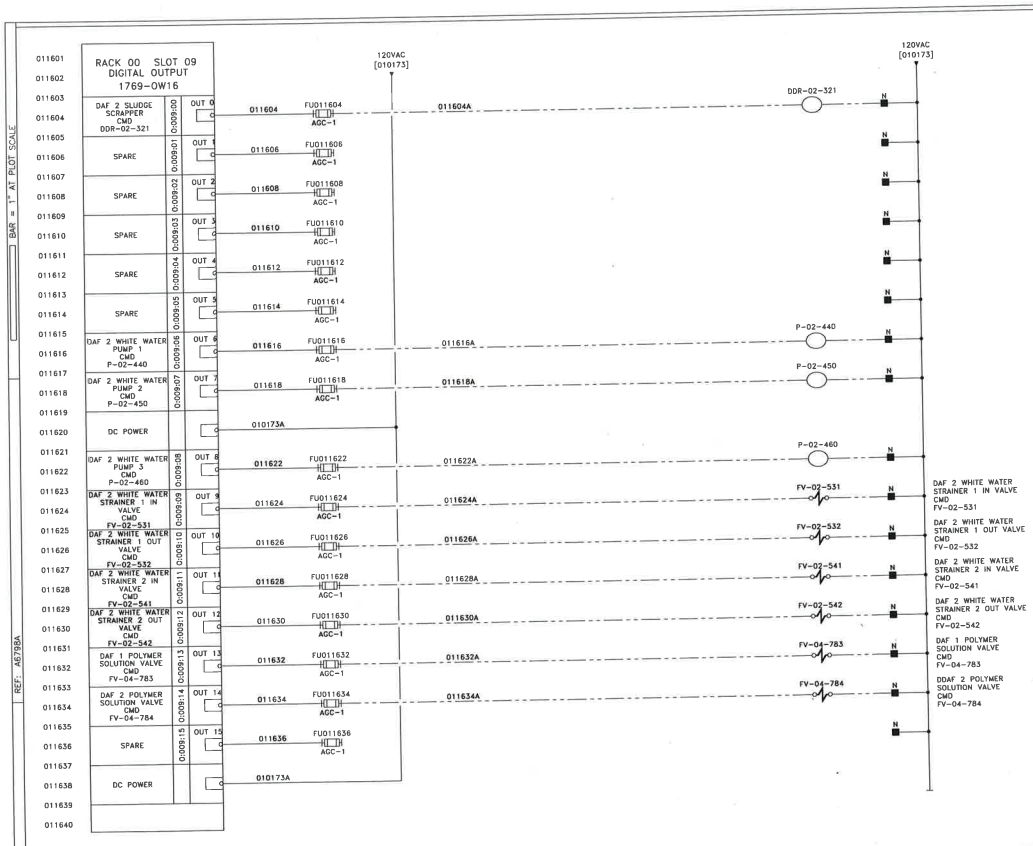


WIRING

- VEOLIA
- CUSTOMER
- INTERNAL WIRING

| REV | DESCRIPTION | DATE | REVD | CHKD | APVD | ECN |
|---|---|---|---|---|---|---|
| Z | | | | | | |
| E | FOR APPROVAL | 2019-01-03 | HZ | RA | – | – |

CONFIDENTIALITY AND INTELLECTUAL PROPERTY NOTICE
ALL INFORMATION CONTAINED IN THIS DOCUMENT IS THE SOLE PROPERTY OF VEOLIA WATER TECHNOLOGIES CANADA INC. AND IS PROTECTED BY ALL APPLICABLE LAWS, INCLUDING BUT NOT LIMITED TO COPYRIGHT AND OTHER INTELLECTUAL PROPERTY LAWS. THE DESIGN CONCEPTS AND INFORMATION CONTAINED HEREIN ARE PROPRIETARY TO V.W.T. AND ARE SUBMITTED IN CONFIDENCE. THEY ARE NOT TRANSFERABLE. THEY MUST BE USED ONLY FOR THE PURPOSE FOR WHICH THE DOCUMENT IS EXPRESSLY SUBMITTED AND NO IMPLICIT LICENCE IS GRANTED OTHERWISE BY THE SUBMISSION OF THIS DOCUMENT. THEY ARE CONFIDENTIAL AND PRIVILEGED INFORMATION OF V.W.T. AND THEY MUST NOT BE DISCLOSED, REPRODUCED, LOANED, REMITTED OR USED IN ANY OTHER MANNER WITHOUT THE EXPRESS WRITTEN CONSENT OF V.W.T. V.W.T. ASSUMES NO RESPONSIBILITY OR LIABILITY FOR THE USE OF THIS DOCUMENT OR THE DESIGN CONCEPTS AND INFORMATION CONTAINED HEREIN FOR WHICH IS PROJECT, OR IN A MANNER THAT DOES NOT RELATE TO THE FITNESS OR PURPOSE OF THIS DOCUMENT. IN NO EVENT SHALL THIS DOCUMENT OR THE DESIGN CONCEPTS AND INFORMATION CONTAINED HEREIN BE USED IN A MANNER DETRIMENTAL TO THE INTEREST OF V.W.T. ALL COPYRIGHT, PATENT AND OTHER INTELLECTUAL PROPERTY RIGHTS ARE RESERVED. ACCEPTANCE OF THE DELIVERY OF THIS DOCUMENT CONSTITUTES AGREEMENT TO THESE TERMS AND CONDITIONS.

| DESIGNER | DATE |
|---|---|
| – | – |
| CHECKER | DATE |
| – | – |
| ENGINEER | DATE |
| – | – |
| SCALE: N/A | |

TITLE: CONTROL PANEL LCP-02-300 ELECTRICAL SCHEMATIC

CLIENT: WWTP UPGRADE CITY OF IQALUIT

VEOLIA

VEOLIA WATER TECHNOLOGIES CANADA INC. 4100 Sartelon, Saint-Laurent, Qc. Canada. Tel: (514) 324-7230

| PROJECT | DRAWING | INTERNAL | SHEET | REV |
|---|---|---|---|---|
| 5000218036-ELD | 0001-AU-VWT | – | 16 OF 21 | 1 |

BAR = 1" AT PLOT SCALE

REF: A6798A

STD: "B" 11x17

Jan 29, 2019 16:27:15 – G:\Projets A67XX\A6798A – VEOLIA – 5000218036 Iqaluit WWTP Upgrade\DOC\DESSIN\000-DRAWINGS\LCP-02-300\REV 1\5000218036-ELD-0001-AU-VWT-016.dwg – rasloni

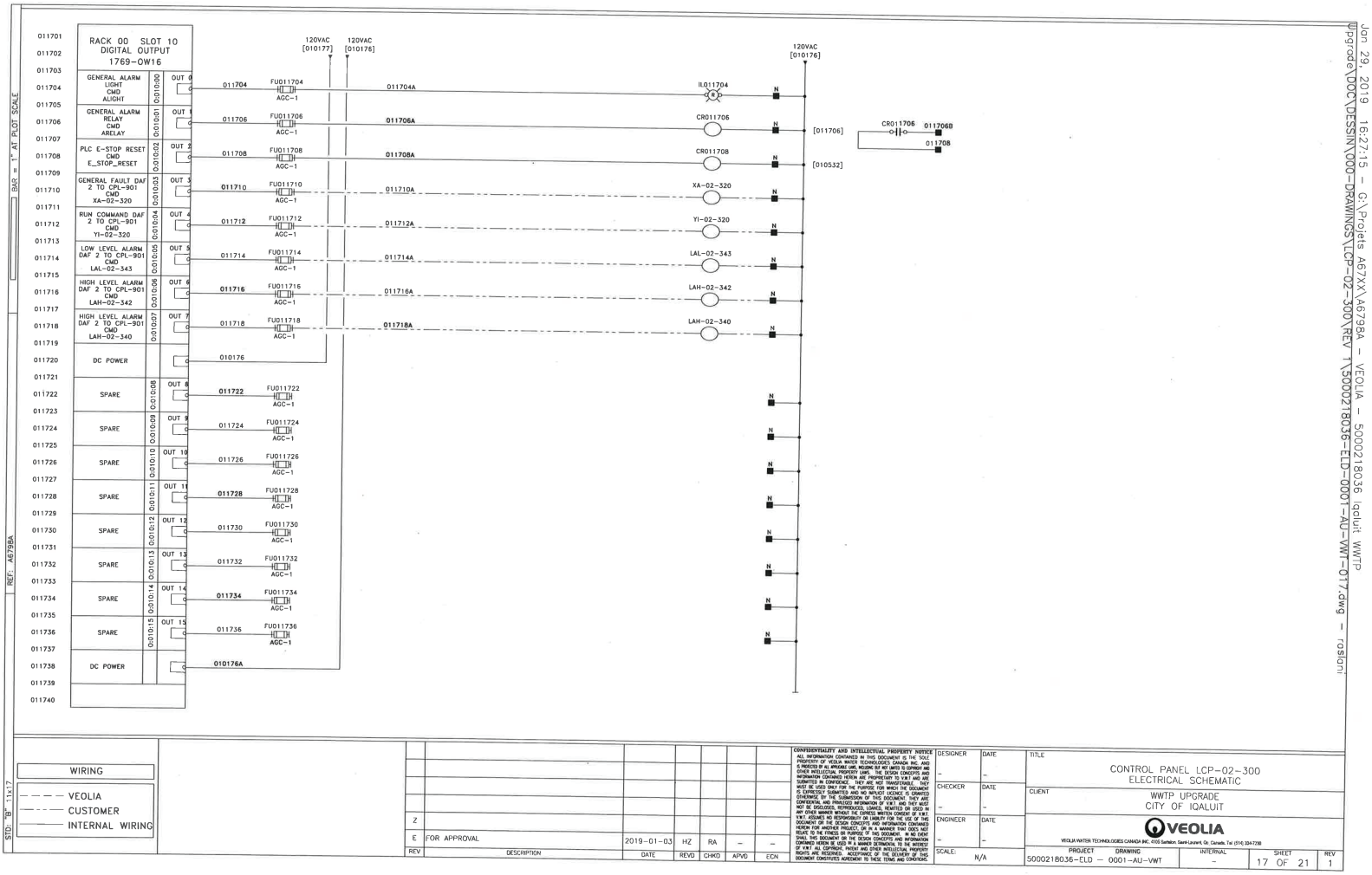


Jan 29, 2019 16:27:15 - G:\Projets A67XX\A6798A - VEOLIA - 5000218036 Iqaluit WWTP Upgrade\DOC\DESSIN\000-DRAWINGS\LCP-02-300\REV 1\5000218036-ELD-0001-AU-WWT-017.dwg - rosiani

| REV | DESCRIPTION | DATE | REVD | CHKD | APVD | ECN |
|---|---|---|---|---|---|---|
| Z | | | | | | |
| E | FOR APPROVAL | 2019-01-03 | HZ | RA | – | – |

CONFIDENTIALITY AND INTELLECTUAL PROPERTY NOTICE
ALL INFORMATION CONTAINED IN THIS DOCUMENT IS THE SOLE PROPERTY OF VEOLIA WATER TECHNOLOGIES CANADA INC. AND IS PROTECTED BY ALL APPLICABLE LAWS, INCLUDING BUT NOT LIMITED TO COPYRIGHT AND OTHER INTELLECTUAL PROPERTY LAWS. THE DESIGN CONCEPTS AND INFORMATION CONTAINED HEREIN ARE PROPRIETARY TO V.W.T. AND ARE SUBMITTED IN CONFIDENCE. THIS DOCUMENT AND THE INFORMATION CONTAINED HEREIN MUST BE USED ONLY FOR THE PURPOSE FOR WHICH THE DOCUMENT IS EXPRESSLY SUBMITTED AND NO IMPLICIT LICENCE IS GRANTED OTHERWISE BY THE SUBMISSION OF THIS DOCUMENT. THEY ARE CONFIDENTIAL AND PRIVILEGED INFORMATION OF V.W.T. AND THEY MUST NOT BE DISCLOSED, REPRODUCED, LOANED, MODIFIED OR USED IN ANY OTHER MANNER WITHOUT THE EXPRESS WRITTEN CONSENT OF V.W.T. V.W.T. ASSUMES NO RESPONSIBILITY FOR ANY USE OF THIS DOCUMENT OR THE DESIGN CONCEPTS AND INFORMATION CONTAINED HEREIN FOR ANOTHER PROJECT, OR IN A MANNER THAT DOES NOT RELATE TO THE FITNESS OR PURPOSE OF THIS DOCUMENT. IN NO EVENT SHALL THIS DOCUMENT OR THE DESIGN CONCEPTS AND INFORMATION CONTAINED HEREIN BE USED TO THE DETRIMENT OR DESTRUCTION, TO THE INTEREST OF V.W.T. ALL COPYRIGHT, PATENT AND OTHER INTELLECTUAL PROPERTY RIGHTS ARE RESERVED. ACCEPTANCE OF THE DELIVERY OF THIS DOCUMENT CONSTITUTES AGREEMENT TO THESE TERMS AND CONDITIONS.

| | | |
|---|---|---|
| DESIGNER | – | DATE – |
| CHECKER | – | DATE – |
| ENGINEER | – | DATE – |
| SCALE: | N/A | |

TITLE: CONTROL PANEL LCP-02-300
ELECTRICAL SCHEMATIC

CLIENT: WWTP UPGRADE
CITY OF IQALUIT

VEOLIA
VEOLIA WATER TECHNOLOGIES CANADA INC. 4105 Sartelon, Saint-Laurent, Qc, Canada, Tel: (514) 334-7730

| PROJECT | DRAWING | INTERNAL | SHEET | REV |
|---|---|---|---|---|
| 5000218036 – ELD | – 0001 – AU – WWT | – | 17 OF 21 | 1 |

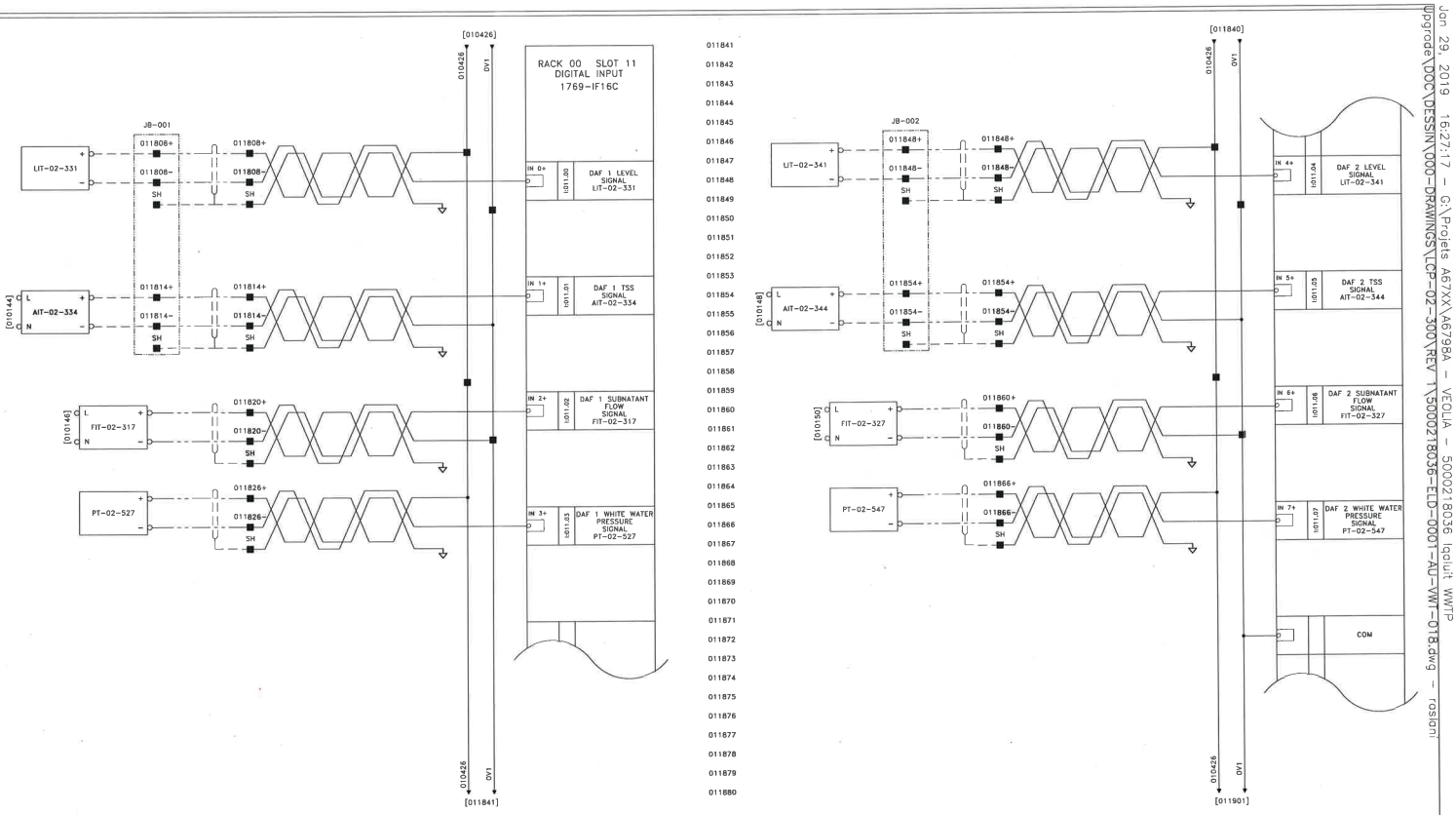


Jan 29, 2019 16:27:17 - G:\Projets A67XX\A6798A - VEOLIA - 5000218036 Iqaluit WWTP
Upgrade\DOC\DESSIN\000-DRAWINGS\LCP-02-300\REV 1\5000218036-ELD-0001-AU-VWT-018.dwg - roslani

BAR = 1" AT PLOT SCALE

REF: A6798A

STD: "B" 11x17

| WIRING |
|---|
| VEOLIA |
| CUSTOMER |
| INTERNAL WIRING |

| REV | DESCRIPTION | DATE | REVD | CHKD | APVD | ECN |
|---|---|---|---|---|---|---|
| 1 | FOR APPROVAL | 2019-01-03 | HZ | RA | - | - |


CONFIDENTIALITY AND INTELLECTUAL PROPERTY NOTICE
ALL INFORMATION CONTAINED IN THIS DOCUMENT IS THE SOLE PROPERTY OF VEOLIA WATER TECHNOLOGIES CANADA INC. AND IS PROTECTED BY ALL APPLICABLE LAW, INCLUDING BUT NOT LIMITED TO COPYRIGHT AND OTHER INTELLECTUAL PROPERTY LAWS. THE DESIGN CONCEPTS AND INFORMATION CONTAINED HEREIN ARE PROPRIETARY TO V.W.T. AND ARE SUBMITTED IN CONFIDENCE. THEY ARE NOT TRANSFERABLE. THEY MUST BE USED ONLY FOR THE PURPOSE FOR WHICH THEY ARE DOCUMENT IS EXPRESSLY SUBMITTED AND NO IMPLICIT LICENCE IS GRANTED OTHERWISE BY THE SUBMISSION OF THIS DOCUMENT. THEY ARE CONFIDENTIAL AND PRIVILEGED INFORMATION OF V.W.T. AND THEY MUST NOT BE DISCLOSED, REPRODUCED, LOANED, REMITTED OR USED IN ANY OTHER MANNER WITHOUT THE EXPRESS WRITTEN CONSENT OF V.W.T. V.W.T. ASSUMES NO RESPONSIBILITY OR LIABILITY FOR THE USE OF THIS DOCUMENT OR THE DESIGN CONCEPTS AND INFORMATION CONTAINED HEREIN FOR ANOTHER PROJECT, OR IN A MANNER THAT DOES NOT RELATE TO THE FITNESS OR PURPOSE OF THIS DOCUMENT. IN NO EVENT SHALL THIS DOCUMENT OR THE DESIGN CONCEPTS AND INFORMATION CONTAINED HEREIN BE USED IN A MANNER DETRIMENTAL TO THE INTEREST OF V.W.T. ALL COPYRIGHT, PATENT AND OTHER INTELLECTUAL PROPERTY RIGHTS ARE RESERVED. ACCEPTANCE OF THE DELIVERY OF THIS DOCUMENT CONSTITUTES AGREEMENT TO THESE TERMS AND CONDITIONS.


| DESIGNER | DATE |
|---|---|
| - | - |
| CHECKER | DATE |
| - | - |
| ENGINEER | DATE |
| - | - |
| SCALE: N/A | |

TITLE
CONTROL PANEL LCP-02-300
ELECTRICAL SCHEMATIC

CLIENT
WWTP UPGRADE
CITY OF IQALUIT

VEOLIA
VEOLIA WATER TECHNOLOGIES CANADA INC. 4195 Sartelon, Saint-Laurent, Qc. Canada. Tel (514) 334-7230

| PROJECT | DRAWING | INTERNAL | SHEET | REV |
|---|---|---|---|---|
| 5000218036-ELD | 0001-AU-VWT | - | 18 OF 21 | 1 |

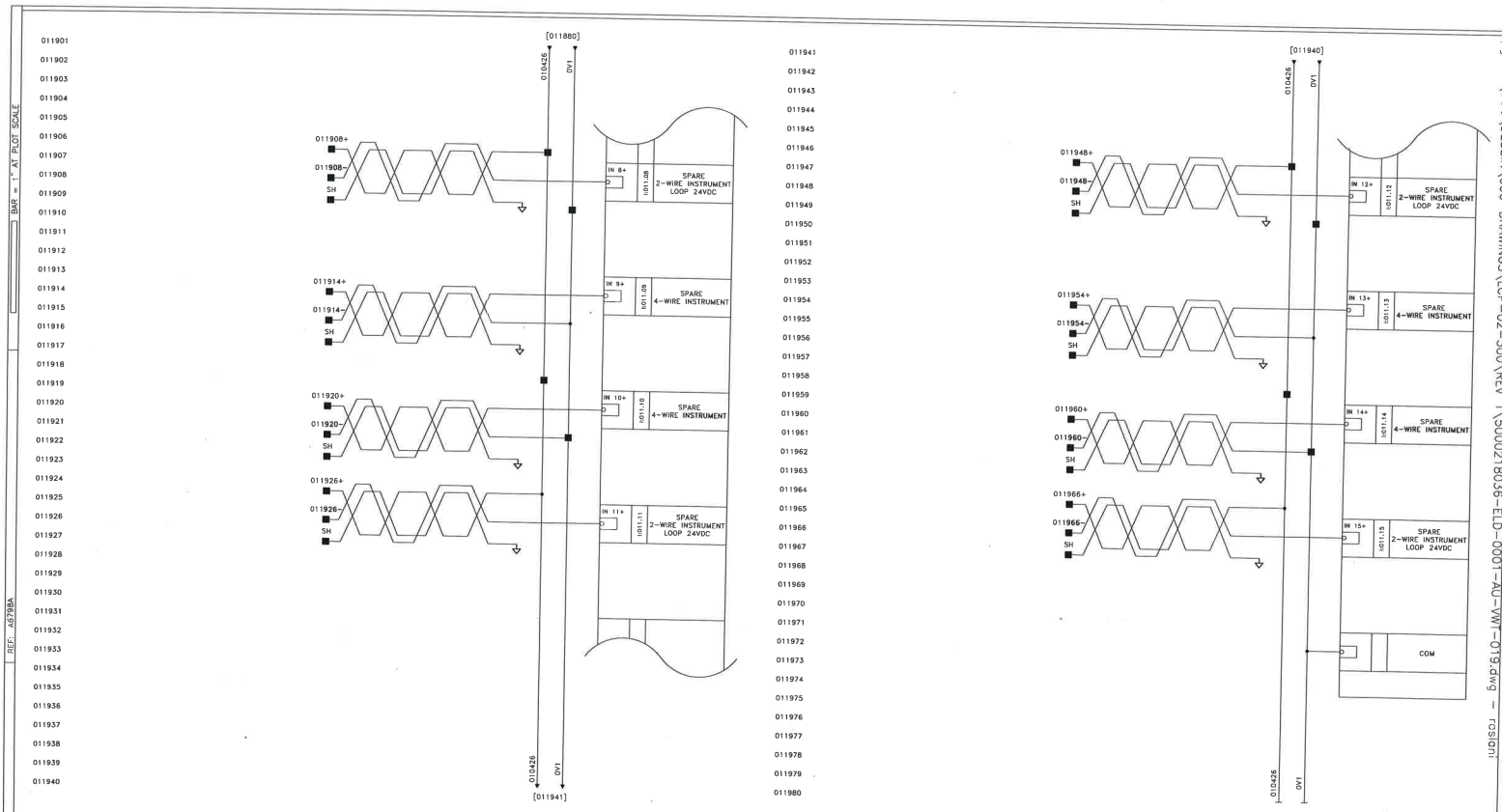


Jan 29, 2019 16:27:17 - G:\Projets A67XX\A6798A - VEOLIA - 5000218036 Iqaluit WWTP Upgrade\DOC\DESSIN\000-DRAWINGS\LCP-02-300\REV 1\5000218036-ELD-0001-AU-VWT-019.dwg - rasiani

WIRING

- - - - VEOLIA
- - - - CUSTOMER
——— INTERNAL WIRING

| REV | DESCRIPTION | DATE | REVD | CHKD | APVD | ECN |
|---|---|---|---|---|---|---|
| 1 | FOR APPROVAL | 2019-01-03 | HZ | RA | - | - |


CONFIDENTIALITY AND INTELLECTUAL PROPERTY NOTICE
ALL INFORMATION CONTAINED IN THIS DOCUMENT IS THE SOLE PROPERTY OF VEOLIA WATER TECHNOLOGIES CANADA INC. AND IS PROTECTED BY ALL APPLIABLE LAWS, INCLUDING BUT NOT LIMITED TO COPYRIGHT AND OTHER INTELLECTUAL PROPERTY LAWS. THE DESIGN CONCEPTS AND INFORMATION CONTAINED HEREIN ARE PROPRIETARY TO V.W.T. AND ARE SUBMITTED IN CONFIDENCE. THEY ARE NOT TRANSFERABLE. THEY MUST BE USED ONLY FOR THE PURPOSE FOR WHICH THE DOCUMENT IS EXPRESSLY SUBMITTED AND NO IMPLICIT LICENCE IS GRANTED OTHERWISE BY THE SUBMISSION OF THIS DOCUMENT. THEY ARE CONFIDENTIAL AND PRIVILEGED INFORMATION OF V.W.T. AND THEY MUST NOT BE DISCLOSED, REPRODUCED, LOANED, REMITTED OR USED IN ANY OTHER MANNER WITHOUT THE EXPRESS WRITTEN CONSENT OF V.W.T. V.W.T. ASSUMES NO RESPONSIBILITY OR LIABILITY FOR THE USE OF THIS DOCUMENT OR THE DESIGN CONCEPTS AND INFORMATION CONTAINED HEREIN FOR ANOTHER PROJECT, OR IN A MANNER THAT DOES NOT RELATE TO THE EXPRESS OR PURPOSE OF THIS DOCUMENT. IN NO EVENT SHALL THIS DOCUMENT OR THE DESIGN CONCEPTS AND INFORMATION CONTAINED HEREIN BE USED IN A MANNER SUBMITTAL TO THE INTEREST OF V.W.T. ALL COPYRIGHT, PATENT AND OTHER INTELLECTUAL PROPERTY RIGHTS ARE RESERVED. ACCEPTANCE OF THE DELIVERY OF THIS DOCUMENT CONSTITUES AGREEMENT TO THESE TERMS AND CONDITIONS.


| DESIGNER | DATE |
|---|---|
| - | - |
| CHECKER | DATE |
| - | - |
| ENGINEER | DATE |
| - | - |
| SCALE: N/A | |

TITLE
CONTROL PANEL LCP-02-300
ELECTRICAL SCHEMATIC

CLIENT
WWTP UPGRADE
CITY OF IQALUIT

VEOLIA
VEOLIA WATER TECHNOLOGIES CANADA INC. 4105 Sartelon, Saint-Laurent, Qc, Canada, Tel (514) 334-7230

| PROJECT | DRAWING | INTERNAL | SHEET | REV |
|---|---|---|---|---|
| 5000218036-ELD | 0001-AU-VWT | - | 19 OF 21 | 1 |

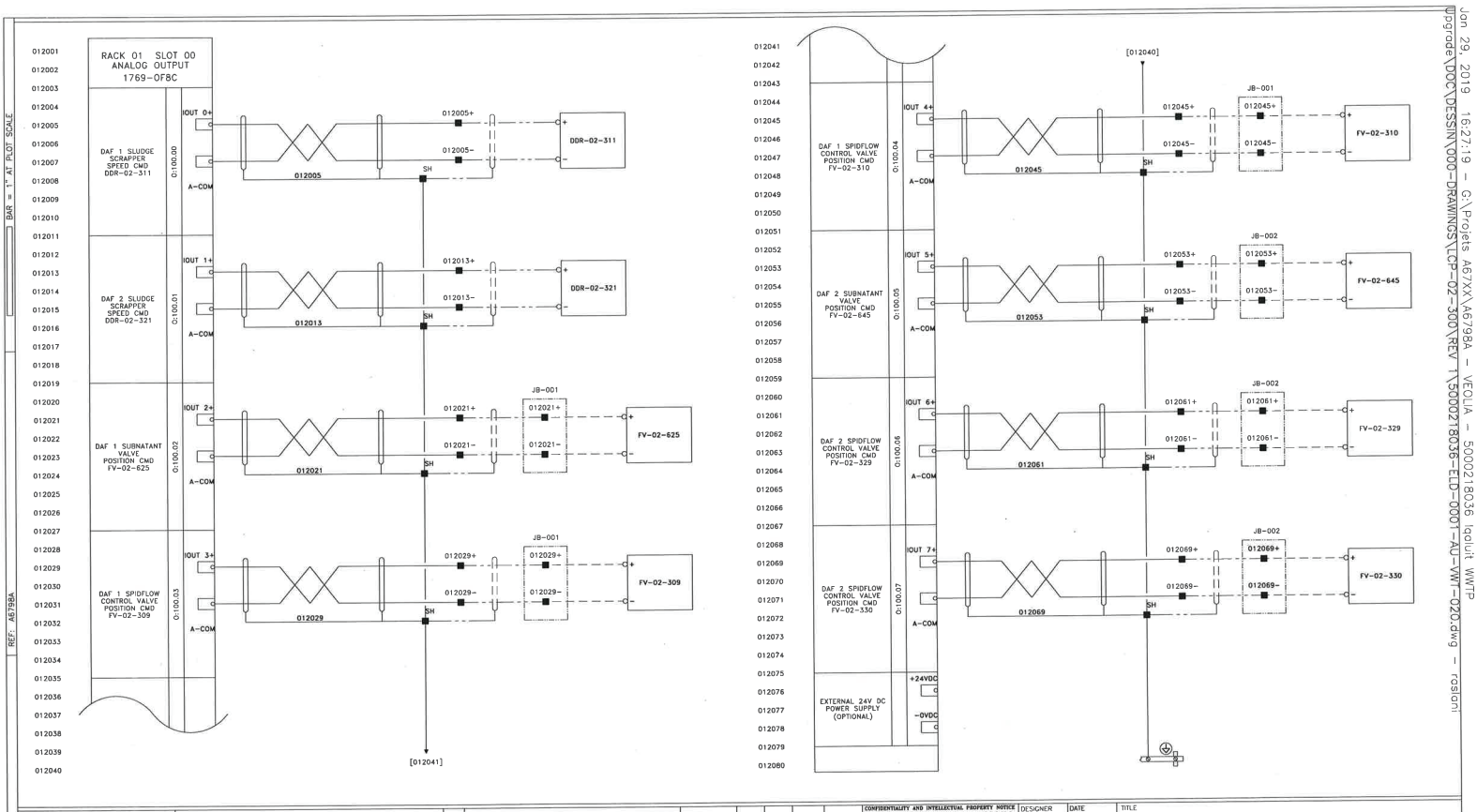


WIRING

- VEOLIA
- CUSTOMER
- INTERNAL WIRING

| REV | DESCRIPTION | DATE | REVD | CHKD | APVD | ECN |
|---|---|---|---|---|---|---|
| 1 | FOR APPROVAL | 2019-01-03 | HZ | RA | – | – |

CONFIDENTIALITY AND INTELLECTUAL PROPERTY NOTICE
ALL INFORMATION CONTAINED IN THIS DOCUMENT IS THE SOLE PROPERTY OF VEOLIA WATER TECHNOLOGIES CANADA INC. AND IS PROTECTED BY ALL APPLICABLE LAWS, INCLUDING BUT NOT LIMITED TO COPYRIGHT AND OTHER INTELLECTUAL PROPERTY LAWS. THE DESIGN CONCEPTS AND INFORMATION CONTAINED HEREIN ARE PROPRIETARY TO V.W.T. AND ARE SUBMITTED IN CONFIDENCE. THEY ARE NOT TRANSFERABLE. THEY MUST BE USED ONLY FOR THE PURPOSE FOR WHICH THE DOCUMENT IS EXPRESSLY SUBMITTED AND NO IMPLICIT LICENCE IS GRANTED OTHERWISE BY THE SUBMISSION OF THIS DOCUMENT. THEY ARE CONFIDENTIAL AND PRIVILEGED INFORMATION OF V.W.T. AND THEY MUST NOT BE DISCLOSED, REPRODUCED, LOANED, REMITTED OR USED IN ANY OTHER MANNER WITHOUT THE EXPRESS WRITTEN CONSENT OF V.W.T. V.W.T. ASSUMES NO RESPONSIBILITY OR LIABILITY FOR THE USE OF THIS DOCUMENT OR THE DESIGN CONCEPTS AND INFORMATION CONTAINED HEREIN FOR ANOTHER PROJECT, OR IN A MANNER THAT DOES NOT RELATE TO THE FITNESS OR PURPOSE OF THIS DOCUMENT. IN NO EVENT SHALL THIS DOCUMENT OR THE DESIGN CONCEPTS AND INFORMATION CONTAINED HEREIN BE USED IN A MANNER DETRIMENTAL TO THE INTEREST OF V.W.T. ALL COPYRIGHT, PATENT AND OTHER INTELLECTUAL PROPERTY RIGHTS ARE RESERVED. ACCEPTANCE OF THE DELIVERY OF THIS DOCUMENT CONSTITUTES AGREEMENT TO THESE TERMS AND CONDITIONS.

| DESIGNER | DATE |
|---|---|
| – | – |
| CHECKER | DATE |
| – | – |
| ENGINEER | DATE |
| – | – |
| SCALE: N/A | |

TITLE: CONTROL PANEL LCP-02-300 ELECTRICAL SCHEMATIC

CLIENT: WWTP UPGRADE CITY OF IQALUIT

VEOLIA

VEOLIA WATER TECHNOLOGIES CANADA INC. 4155 Sartelon, Saint-Laurent, Qc, Canada. Tel (514) 334-7230

| PROJECT | DRAWING | INTERNAL | SHEET | REV |
|---|---|---|---|---|
| 5000218036-ELD | 0001-AU-VWT | – | 20 OF 21 | 1 |

BAR = 1" AT PLOT SCALE

REF: A6798A

STD: "B" 11x17

Jan 29, 2019 16:27:19 - G:\Projets A67XX\A6798A - VEOLIA - 5000218036 Iqaluit WWTP Upgrade\DOC\DESSIN\000-DRAWINGS\LCP-02-300\REV 1\5000218036-ELD-0001-AU-VWT-020.dwg - rasloni

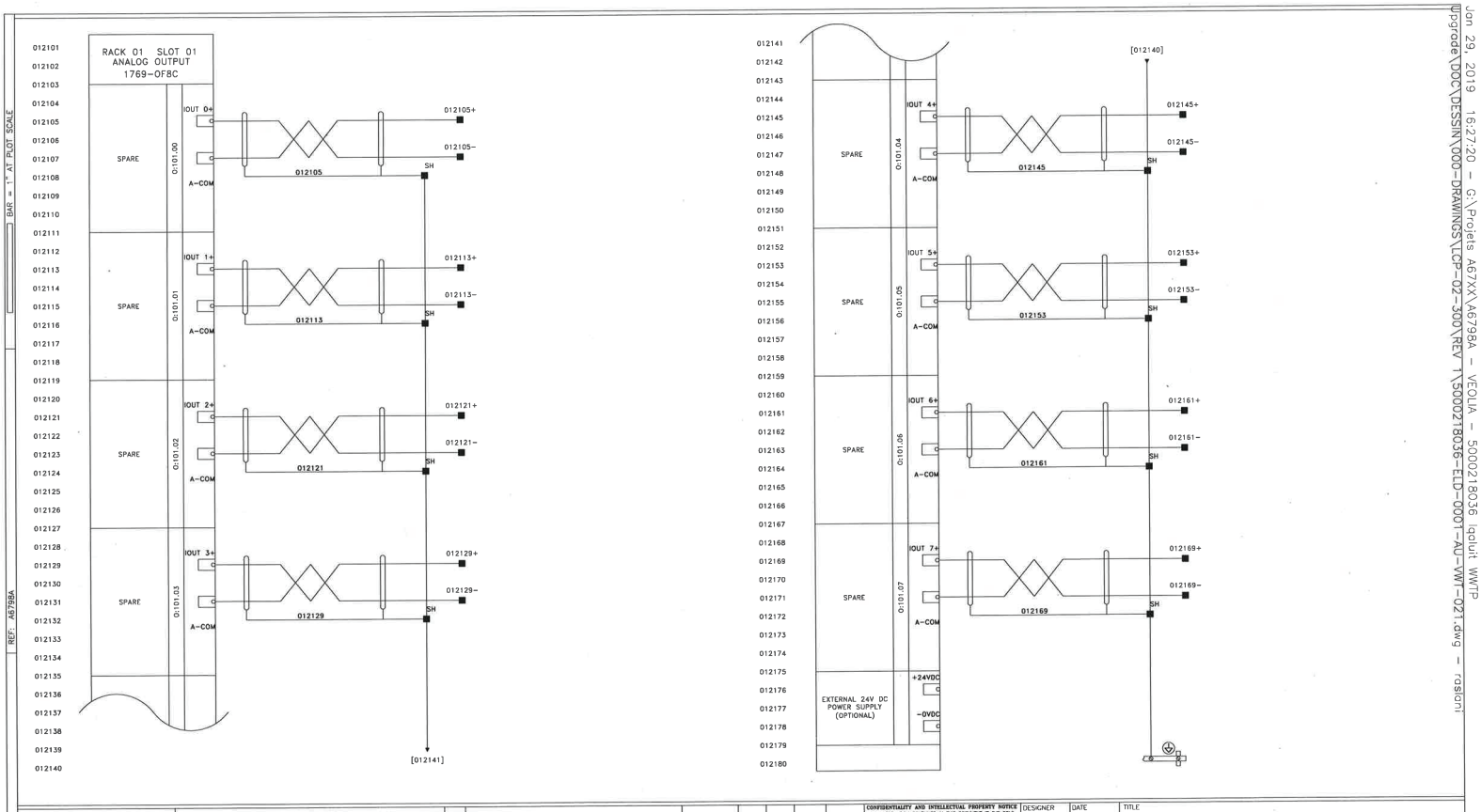


WIRING

- VEOLIA
- CUSTOMER
- INTERNAL WIRING

| REV | DESCRIPTION | DATE | REVD | CHKD | APVD | ECN |
|---|---|---|---|---|---|---|
| 1 | FOR APPROVAL | 2019-01-03 | HZ | RA | – | – |

CONFIDENTIALITY AND INTELLECTUAL PROPERTY NOTICE
ALL INFORMATION CONTAINED IN THIS DOCUMENT IS THE SOLE PROPERTY OF VEOLIA WATER TECHNOLOGIES CANADA INC. AND IS PROTECTED IN ALL APPLICABLE LAWS, INCLUDING BUT NOT LIMITED TO COPYRIGHT AND OTHER INTELLECTUAL PROPERTY LAWS. THE DESIGN CONCEPTS AND INFORMATION CONTAINED HEREIN ARE PROPRIETARY TO V.W.T. AND ARE SUBMITTED IN CONFIDENCE. THEY ARE NOT TRANSFERABLE. THEY MUST BE USED ONLY FOR THE PURPOSE FOR WHICH THE DOCUMENT IS EXPRESSLY SUBMITTED AND NO IMPLICIT LICENCE IS GRANTED OTHERWISE BY THE SUBMISSION OF THIS DOCUMENT. THEY ARE CONFIDENTIAL AND PRIVILEGED INFORMATION OF V.W.T. AND THEY MUST NOT BE DISCLOSED, REPRODUCED, LOANED, REMITTED OR USED IN ANY OTHER MANNER WITHOUT THE EXPRESS WRITTEN CONSENT OF V.W.T. V.W.T. ASSUMES NO RESPONSIBILITY OR LIABILITY FOR THE USE OF THIS DOCUMENT OR THE DESIGN CONCEPTS AND INFORMATION CONTAINED HEREIN FOR ANOTHER PROJECT, OR IN A MANNER THAT DOES NOT RELATE TO THE FITNESS OR PURPOSE OF THIS DOCUMENT. IN NO EVENT SHALL THIS DOCUMENT OR THE DESIGN CONCEPTS AND INFORMATION CONTAINED HEREIN BE USED IN A MANNER DETRIMENTAL TO THE INTEREST OF V.W.T. ALL COPYRIGHT, PATENT AND OTHER INTELLECTUAL PROPERTY RIGHTS ARE RESERVED. ACCEPTANCE OF THE DELIVERY OF THIS DOCUMENT CONSTITUTES AGREEMENT TO THESE TERMS AND CONDITIONS.

| DESIGNER | DATE |
|---|---|
| – | – |
| CHECKER | DATE |
| – | – |
| ENGINEER | DATE |
| – | – |
| SCALE: N/A | |

TITLE
CONTROL PANEL LCP-02-300
ELECTRICAL SCHEMATIC

CLIENT
WWTP UPGRADE
CITY OF IQALUIT

VEOLIA
VEOLIA WATER TECHNOLOGIES CANADA INC. 4155 Sartelon, Saint-Laurent, Qc. Canada. Tel (514) 334-7290

| PROJECT | DRAWING | INTERNAL | SHEET | REV |
|---|---|---|---|---|
| 5000218036-ELD | 0001-AU-VWT | – | 21 OF 21 | 1 |

Jan 29, 2019 16:27:20 – G:\Projets A67XX\A6798A – VEOLIA – 5000218036 Iqaluit WWTP Upgrade\DOC\DESSIN\000-DRAWINGS\LCP-02-300\REV 1\5000218036-ELD-0001-AU-VWT-021.dwg – rasloni

Jan 29, 2019 15:45:36 - G:\Projets A67XX\A6798A - VEOLIA - 5000218036 Iqaluit WWTP Upgrade\DOC\DESSIN\000-DRAWINGS\JB-001\5000218036-EPL-0002-AU-VWT-001.dwg - raslani

# WWTP UPGRADE
# CITY OF IQALUIT
# CONTROL JUNCTION BOX
# JB-001
# PROJECT: 5000218036

BAR = 1" AT PLOT SCALE

REF: A6798A

STD: "B" 11x17

| REV | DESCRIPTION | DATE | REVD | CHKD | APVD | ECN |
|---|---|---|---|---|---|---|
| 1 | FOR APPROVAL | 2019-01-09 | HZ | RA | - | - |

**CONFIDENTIALITY AND INTELLECTUAL PROPERTY NOTICE**
ALL INFORMATION CONTAINED IN THIS DOCUMENT IS THE SOLE PROPERTY OF VEOLIA WATER TECHNOLOGIES CANADA INC. AND IS PROVIDED BY AN APPLICABLE LAW, REGARDING BUT NOT LIMITED TO COPYRIGHT AND OTHER INTELLECTUAL PROPERTY LAWS. THE DESIGN CONCEPTS AND INFORMATION CONTAINED HEREIN ARE PROPRIETARY TO VWT AND ARE SUBMITTED IN CONFIDENCE. THEY ARE NOT TRANSFERABLE. THEY MUST BE USED ONLY FOR THE PURPOSE FOR WHICH THE DOCUMENT IS EXPRESSLY SUBMITTED AND NO IMPLICIT LICENCE IS GRANTED OTHERWISE BY THE SUBMISSION OF THIS DOCUMENT. THEY ARE CONFIDENTIAL AND PRIVILEGED INFORMATION OF VWT AND THEY MUST NOT BE DISCLOSED, REPRODUCED, LOANED, REMITTED OR USED IN ANY OTHER MANNER WITHOUT THE EXPRESS WRITTEN CONSENT OF VWT. VWT ASSUMES NO RESPONSIBILITY OR LIABILITY FOR THE USE OF THIS DOCUMENT OR THE DESIGN CONCEPTS AND INFORMATION CONTAINED HEREIN FOR ANY OTHER PROJECT, OR IN A MANNER THAT DOES NOT RELATE TO THE FORMS OR PURPOSE OF THIS DOCUMENT. IN NO EVENT SHALL THIS DOCUMENT OR THE DESIGN CONCEPTS AND INFORMATION CONTAINED HEREIN BE USED IN A MANNER DETRIMENTAL TO THE INTERESTS OF VWT. ALL COPYRIGHT, PATENT AND OTHER INTELLECTUAL PROPERTY RIGHTS ARE RESERVED. ACCEPTANCE OF THE DELIVERY OF THIS DOCUMENT CONSTITUTES AGREEMENT TO THESE TERMS AND CONDITIONS.

| | |
|---|---|
| DESIGNER | - |
| DATE | - |
| CHECKER | - |
| DATE | - |
| ENGINEER | - |
| DATE | - |
| SCALE: | N/A |

TITLE: JB-001 CONTROL JUNCTION BOX TITLE PAGE

CLIENT: WWTP UPGRADE CITY OF IQALUIT

VEOLIA
VEOLIA WATER TECHNOLOGIES CANADA INC. 4100 Sartelon, Saint-Laurent, Qc, Canada, Tel: (514) 284-7200

| PROJECT | DRAWING | INTERNAL | SHEET | REV |
|---|---|---|---|---|
| 5000218036-EPL | 0002-AU-VWT | - | 01 OF 05 | 1 |

Jan 29, 2019 15:45:38 - G:\Projets A67XX\A6798A - VEOLIA - 5000218036 Iqaluit WWTP Upgrade\DOC\DESSIN\000-DRAWINGS\JB-001\5000218036-EPL-0002-AU-VWT-002.dwg - rastoni

BAR = 1" AT PLOT SCALE

REF: A6798A

STD "B" 11x17

DRAWING LIST

| DESCRIPTION | DRAWING NUMBER |
|---|---|
| CONTROL JUNCTION BOX JB-001 | |
| TITLE PAGE | 5000218036-EPL-0002-AU-VWT-001 |
| LEGEND & DRAWING LIST | 5000218036-EPL-0002-AU-VWT-002 |
| EXTERNAL & INTERNAL LAYOUT | 5000218036-EPL-0002-AU-VWT-003 |
| BILL OF MATERIAL | 5000218036-EPL-0002-AU-VWT-004 |
| TERMINAL LAYOUT | 5000218036-EPL-0002-AU-VWT-005 |
| FIELD WIRING | 5000218036-EID-0002-AU-VWT-001 |
| FIELD WIRING | 5000218036-EID-0002-AU-VWT-002 |

LEGEND

LOW PRESSURE
HIGH PRESSURE
LOW LEVEL
HIGH LEVEL
LIMIT SWITCH
LIMIT SWITCH
LOW FLOW
HIGH FLOW
RELAY CONTACT
RELAY CONTACT
RELAY CONTACT
ON DELAY TIMER
OFF DELAY TIMER
GROUND
ISOLATED GROUND
FUSE (POWER)
FUSE (CONTROL)
DISTRIBUTION BLOCK

MAINTAINED TWO SELECTOR SWITCH
MAINTAINED 3 POSITIONS SELECTOR SWITCH
SPRING RETURN FROM LEFT 3 POSITIONS SELECTOR SWITCH
SPRING RETURN FROM RIGHT 3 POSITIONS SELECTOR SWITCH
SPRING RETURN FROM BOTH 3 POSITIONS SELECTOR SWITCH
PUSH BUTTON
PUSH BUTTON
PULL BUTTON
PULL BUTTON
EMERGENCY STOP BUTTON
POTENTIOMETER
CURRENT TRANSFORMER
THERMOSTAT
THERMOSTAT
1 POLE CIRCUIT BREAKER

COOLING FAN
RECEPTACLE 120VAC WITH RJ45
RECEPTACLE 120VAC DUPLEX
PILOT LIGHT
PUSH TO TEST PILOT LIGHT
RELAY COIL
RELAY COIL WITH SURGE SUPPRESSOR
CONTACTOR COIL
CONTACTOR COIL WITH SURGE SUPPRESSOR
ALARM
RESISTOR
SOLENOID
PULL CORD
ZERO SPEED DETECTOR

POWER BLOCK FOR FIELD WIRING
TERMINAL
WIRING JUNCTION
KNIFE TERMINAL

3 POLES THERMAL MAGNETIC CIRCUIT BREAKER
3 POLES MAGNETIC CIRCUIT BREAKER
3 POLES FUSIBLE DISCONNECT SWITCH
3 POLES DISCONNECT SWITCH
3 POLES CONTACTOR
3 POLES OVERLOAD RELAY
1 POLE TRANSFORMER (H3, H2, H1, X2, X4, X1, X3)

| WIRE COLOR CODE | |
|---|---|
| MINIMAL 18AWG GAUGE | |
| POWER 120VAC | BLACK |
| CONTROL 120VAC | RED |
| NEUTRAL | WHITE |
| 24VDC | BLUE |
| 0VDC | BLUE/WHITE |
| DRY CONTRACT | YELLOW, 14AWG |
| NON-ISOLATED GROUND | GREEN |
| ISOLATED GROUND | GREEN/YELLOW |
| TWISTED PAIR | (+) BLACK & (-) WHITE |

| REV | DESCRIPTION | DATE | REVD | CHKD | APVD | ECN |
|---|---|---|---|---|---|---|
| 1 | FOR APPROVAL | 2019-01-09 | HZ | RA | – | – |

CONFIDENTIALITY AND INTELLECTUAL PROPERTY NOTICE
ALL INFORMATION CONTAINED IN THIS DOCUMENT IS THE SOLE PROPERTY OF VEOLIA WATER TECHNOLOGIES CANADA INC. AND IS PROTECTED BY ALL APPLICABLE LAWS, INCLUDING BUT NOT LIMITED TO COPYRIGHT AND OTHER INTELLECTUAL PROPERTY LAWS. THE DESIGN CONCEPTS AND INFORMATION CONTAINED HEREIN ARE CONFIDENTIAL TO VWT AND ARE SUBMITTED IN CONFIDENCE. THEY ARE NOT TRANSFERABLE AND MUST NOT BE USED ONLY FOR THE PURPOSE FOR WHICH THE DOCUMENT IS EXPRESSLY SUBMITTED AND NO IMPLICIT LICENCE IS GRANTED OTHERWISE BY THE SUBMISSION OF THIS DOCUMENT. THEY ARE CONFIDENTIAL AND PRIVILEGED INFORMATION OF VWT, AND THEY MUST NOT BE DISCLOSED, REPRODUCED, LOANED, REWRITTEN OR USED IN ANY OTHER MANNER WITHOUT THE EXPRESS WRITTEN CONSENT OF VWT. VWT ASSUMES NO RESPONSIBILITY OR LIABILITY FOR THE USE OF THIS DOCUMENT OR THE DESIGN CONCEPTS AND INFORMATION CONTAINED HEREIN FOR ANOTHER PROJECT, OR IN A MANNER THAT DOES NOT RELATE TO THE FITNESS OR PURPOSE OF THIS DOCUMENT. IN NO EVENT SHALL VWT BE LIABLE FOR ANY USE OF THE DESIGN CONCEPTS AND INFORMATION CONTAINED HEREIN BE USED IN A MANNER CONTRARY TO THE INTEGRITY OF VWT ALL COPYRIGHT, PATENT AND OTHER INTELLECTUAL PROPERTY RIGHTS ARE RESERVED. ACCEPTANCE OF THE DELIVERY OF THIS DOCUMENT CONSTITUTES AGREEMENT TO THESE TERMS AND CONDITIONS.

| | |
|---|---|
| DESIGNER | DATE – |
| CHECKER | DATE – |
| ENGINEER | DATE – |
| SCALE: | N/A |

TITLE: JB-001 CONTROL JUNCTION BOX LEGEND & DRAWING LIST

CLIENT: WWTP UPGRADE CITY OF IQALUIT

VEOLIA
VEOLIA WATER TECHNOLOGIES CANADA INC. 4105 Sartelon, Saint-Laurent, Qc. Canada. Tel: (514) 334-7230

| PROJECT / DRAWING | INTERNAL | SHEET | REV |
|---|---|---|---|
| 5000218036-EPL – 0002-AU-VWT | – | 02 OF 05 | 1 |

ENCLOSURE NEMA 4X FIERGLASS / 14H'' X 12W'' X 6D'' (PJ14126RL)
cUL APPROVAL

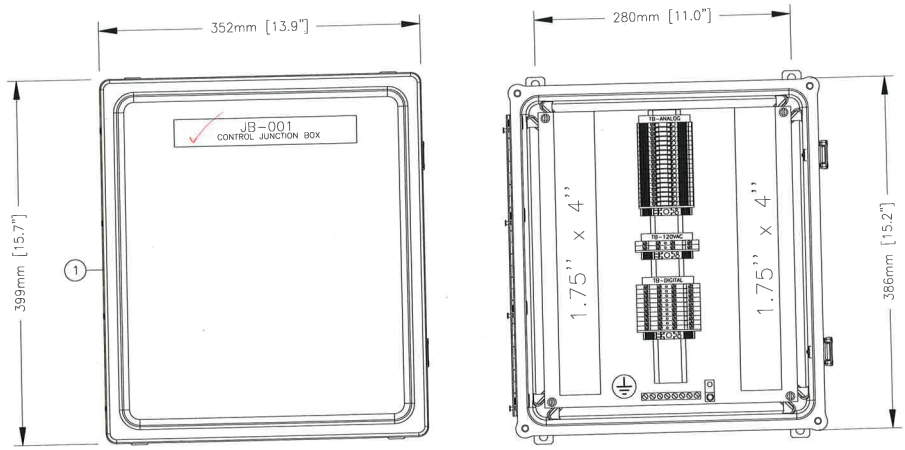


| REV | DESCRIPTION | DATE | REVD | CHKD | APVD | ECN |
|---|---|---|---|---|---|---|
| 1 | FOR APPROVAL | 2019-01-09 | HZ | RA | - | - |

CONFIDENTIALITY AND INTELLECTUAL PROPERTY NOTICE
ALL INFORMATION CONTAINED IN THIS DOCUMENT IS THE SOLE PROPERTY OF VEOLIA WATER TECHNOLOGIES CANADA INC. AND ITS AFFILIATED LIKE, INCLUDING BUT NOT LIMITED TO COPYRIGHT AND OTHER INTELLECTUAL PROPERTY LAWS. THE DESIGN CONCEPTS AND INFORMATION CONTAINED HEREIN ARE PROPRIETARY TO V.W.T. AND ARE SUBMITTED IN CONFIDENCE. THEY ARE NOT TRANSFERABLE. THEY MUST BE USED ONLY FOR THE PURPOSE FOR WHICH THEY ARE SUPPLIED AS EXPRESSLY SUBMITTED AND NO IMPLIED LICENCE IS GRANTED HEREUNDER. BY ACCEPTANCE OF THIS DOCUMENT, THEY ARE CONFIDENTIAL AND PRIVILEGED INFORMATION OF V.W.T. AND THEY MUST NOT BE DISCLOSED, REPRODUCED, LOANED, REMITTED OR USED IN ANY OTHER MANNER WITHOUT THE EXPRESS WRITTEN CONSENT OF V.W.T. V.W.T. ASSUMES NO RESPONSIBILITY OR LIABILITY FOR THE USE OF THIS DOCUMENT OR THE DESIGN CONCEPTS OR INFORMATION CONTAINED HEREIN FOR ANY PURPOSE OTHER THAN THE PURPOSE FOR WHICH THIS DOCUMENT IS SUPPLIED, OR IN A MANNER THAT DOES NOT REFER TO OR INCLUDE THIS DOCUMENT. IN NO EVENT SHALL THIS DOCUMENT OR THE DESIGN CONCEPTS AND INFORMATION CONTAINED HEREIN BE USED IN A MANNER DETRIMENTAL TO THE INTEREST OF V.W.T. ALL COPYRIGHT, PATENT AND OTHER INTELLECTUAL PROPERTY RIGHTS ARE RESERVED. ACCEPTANCE OF THE DELIVERY OF THIS DOCUMENT CONSTITUTES AGREEMENT TO THESE TERMS AND CONDITIONS.

| | | |
|---|---|---|
| DESIGNER | - | DATE - |
| CHECKER | - | DATE - |
| ENGINEER | - | DATE - |
| SCALE: | N/A | |

TITLE: JB-001
CONTROL JUNCTION BOX
EXTERNAL & INTERNAL LAYOUT

CLIENT: WWTP UPGRADE
CITY OF IQALUIT

VEOLIA
VEOLIA WATER TECHNOLOGIES CANADA INC. 4100 Sartelon, Saint-Laurent, Qc, Canada, Tel: (514) 334-7230

| PROJECT | DRAWING | INTERNAL | SHEET | REV |
|---|---|---|---|---|
| 5000218036-EPL | 0002-AU-VWT | - | 03 OF 05 | 1 |

STD: "B" 11x17
REF: A6798A
BAR = 1" AT PLOT SCALE

Jan 29, 2019 15:45:39 - G:\Projets A67XX\A6798A - VEOLIA - 5000218036 Iqaluit WWTP Upgrade\DOC\DESSIN\000-DRAWINGS\JB-001\5000218036-EPL-0002-AU-VWT-003.dwg - rasion

Jan 29, 2019 15:45:39 - G:\Projets A67XX\A6798A - VEOLIA - 5000218036 Iqaluit WWTP Upgrade\DOC\DESSIN\000-DRAWINGS\JB-001\5000218036-EPL-0002-AU-VWT-004.dwg - rasloni

BAR = 1" AT PLOT SCALE

REF: A6798A

STD: "B" 11x17

A

| TB-ANALOG |
|---|
| 011808+ |
| 011808- |
| SH |
| 011814+ |
| 011814- |
| SH |
| 012021+ |
| 012021- |
| SH |
| 012129+ |
| 012129- |
| SH |
| 012045+ |
| 012045- |
| SH |
| - |
| - |
| - |

C

A

| TB-120VAC | |
|---|---|
| 010144 | N |
| - | N |

D

A

| TB-DIGITAL | |
|---|---|
| 010814 | 010404 |
| 010816 | 010404 |
| 010818 | 010404 |
| 010828 | 010404 |
| 010830 | 010404 |
| 010832 | 010404 |
| 010834 | 010404 |
| 010836 | 010404 |
| 010904 | 010406 |
| - | - |

D

TERMINAL DESCRIPTION
A) ID(WAD8)
B) WDU6
C) WDU4
D) WDK2.5
E) DLD2.5
F) FUSE WSI 4/2
G) FUSE WSI 4
H) FUSE KDKS 1/EN4
J) WTR 2.5
K) WDU 2.5

| REV | DESCRIPTION | DATE | REVD | CHKD | APVD | ECN |
|---|---|---|---|---|---|---|
| 1 | FOR APPROVAL | 2019-01-09 | HZ | RA | - | - |

CONFIDENTIALITY AND INTELLECTUAL PROPERTY NOTICE
ALL INFORMATION CONTAINED IN THIS DOCUMENT IS THE SOLE PROPERTY OF VEOLIA WATER TECHNOLOGIES CANADA INC. AND IS PROTECTED BY ALL APPLICABLE LAWS, INCLUDING BUT NOT LIMITED TO COPYRIGHT AND OTHER INTELLECTUAL PROPERTY LAWS. THE DESIGN CONCEPTS AND INFORMATION CONTAINED HEREIN ARE PROPRIETARY TO V.W.T AND ARE SUBMITTED IN CONFIDENCE. THEY ARE NOT TRANSFERABLE. THEY MUST BE USED ONLY FOR THE PURPOSE FOR WHICH THE DOCUMENT IS EXPRESSLY SUBMITTED AND NO IMPLICIT LICENCE IS GRANTED OTHERWISE BY THE SUBMISSION OF THIS DOCUMENT. THEY ARE CONFIDENTIAL AND PRIVILEGED INFORMATION OF V.W.T. AND THEY MUST NOT BE DISCLOSED, REPRODUCED, LOANED, REMITTED OR USED IN ANY OTHER MANNER WITHOUT THE EXPRESS WRITTEN CONSENT OF V.W.T. V.W.T. ASSUMES NO RESPONSIBILITY OR LIABILITY FOR THE USE OF THIS DOCUMENT OR THE DESIGN CONCEPTS AND INFORMATION CONTAINED HEREIN FOR ANOTHER PROJECT, OR IN A MANNER THAT DOES NOT RELATE TO THE FITNESS OR PURPOSE OF THIS DOCUMENT. IN NO EVENT SHALL THIS DOCUMENT OR THE DESIGN CONCEPTS AND INFORMATION CONTAINED HEREIN BE USED IN A MANNER DETRIMENTAL TO THE INTEREST OF V.W.T. ALL COPYRIGHT, PATENT AND OTHER INTELLECTUAL PROPERTY RIGHTS ARE RESERVED. ACCEPTANCE OF THE DELIVERY OF THIS DOCUMENT CONSTITUTES AGREEMENT TO THESE TERMS AND CONDITIONS.

| DESIGNER | DATE |
|---|---|
| - | - |
| CHECKER | DATE |
| - | - |
| ENGINEER | DATE |
| - | - |
| SCALE: N/A | |

TITLE
JB-001
CONTROL JUNCTION BOX
TERMINAL LAYOUT

CLIENT
WWTP UPGRADE
CITY OF IQALUIT

VEOLIA
VEOLIA WATER TECHNOLOGIES CANADA INC. 4105 Sartelon, Saint-Laurent, Qc, Canada, Tel (514) 354-7230

| PROJECT | DRAWING | INTERNAL | SHEET | REV |
|---|---|---|---|---|
| 5000218036-EPL | 0002-AU-VWT | - | 04 OF 05 | 1 |

| ITEM | DESCRIPTION | PART NUMBER | MANUF. | QTY | BY |
|---|---|---|---|---|---|
| 1 | NEMA 4X ENCLOSURE, C/W PAN 14R1311<br>DIM 14"H x 12"W x 6"D, FIBERGLASS REINFORCED POLYESTER | PJ14126RL | HAMMOND | 1 | ENV |
| 2 | TERMINAL 600VAC/DC, 30A WDU 4<br>C/W END PLATE 1050000000 | 1020100000 | WEIDMULLER | A/R | ENV |
| 3 | TERMINAL 600VAC/DC, 50A WDU 6<br>C/W END PLATE 1050000000 OR SEPERATOR 1050100000 | 1020200000 | WEIDMULLER | A/R | ENV |
| 5 | KNIFE TERMINAL 300VAC/DC, 10A, WTR 2.5<br>C/W END PLATE 1050000000 | 1855610000 | WEIDMULLER | A/R | ENV |
| 6 | TERMINAL 2 LEVEL 300VAC/DC, 10A, WDK 2.5<br>C/W END PLATE 1059100000 | 1021500000 | WEIDMULLER | A/R | ENV |
| 7 | TERMINAL 3 LEVEL 300VAC/DC, 10A, DLD 2.5<br>C/W END PLATE 1784210000 | 1784180000 | WEIDMULLER | A/R | ENV |
| 8 | FUSE TERMINAL ¼ X 1¼, 300VAC/DC, 15A, WSI 4/2<br>C/W END PLATE 1880450000 | 1880430000 | WEIDMULLER | A/R | ENV |
| 9 | FUSE TERMINAL 5 X 20mm, 300VAC/DC, 15A, WSI 4 | 1886580000 | WEIDMULLER | A/R | ENV |
| 10 | FUSE TERMINAL 2 LEVEL 5 X 20mm, 300VAC/DC, 10A, KDKS 1/EN4<br>C/W END PLATE 9503330000 | 9503350000 | WEIDMULLER | A/R | ENV |
| 11 | FUSE TERMINAL 2 LEVEL ¼ X 1¼, 300VAC/DC, 10A, KDKS 1/35DB<br>C/W END PLATE 9532470000 | 9532440000 | WEIDMULLER | A/R | ENV |
| 12 | END STOPPER WEW 35/2 | 1061200000 | WEIDMULLER | A/R | ENV |
| 13 | COPPER GROUND BAR, #4-14 | 4C-190 | NSI-INDUSTRIES | A/R | ENV |
| 14 | COPPER GROUND LUG, 600VAC, #6-14, STR | CB35-36-LY | PANDUIT | A/R | ENV |

Jan 29, 2019 15:45:41 – G:\Projets A67XX\A6798A – VEOLIA – 5000218036 Iqaluit WWTP Upgrade\DOC\DESSIN\000-DRAWINGS\JB-001\5000218036-EPL-0002-AU-VWT-005.dwg – rosiani

BAR = 1" AT PLOT SCALE
REF: A6798A
STD: "B" 11x17

| REV | DESCRIPTION | DATE | REVD | CHKD | APVD | ECN |
|---|---|---|---|---|---|---|
| 1 | FOR APPROVAL | 2019-01-09 | HZ | RA | – | – |

CONFIDENTIALITY AND INTELLECTUAL PROPERTY NOTICE
ALL INFORMATION CONTAINED IN THIS DOCUMENT IS THE SOLE PROPERTY OF VEOLIA WATER TECHNOLOGIES CANADA INC. AND IS PROTECTED BY ALL APPLICABLE LAWS, REGULATIONS, COPYRIGHT AND OTHER INTELLECTUAL PROPERTY LAWS. THE DESIGN CONCEPTS AND INFORMATION CONTAINED HEREIN ARE PROPRIETARY TO V.W.T AND ARE CONFIDENTIAL IN NATURE. THEY ARE NOT TRANSFERABLE. THEY MUST BE USED SOLELY FOR THE PURPOSE FOR WHICH THE DOCUMENT IS EXPRESSLY SUBMITTED BY V.W.T AND SHALL NOT BE LOANED OTHERWISE BY THE SUBMISSION OF THIS DOCUMENT. THIS DOCUMENT IS CONFIDENTIAL AND PRIVILEGED INFORMATION OF V.W.T AND THEY MUST NOT BE DISCLOSED, REPRODUCED, LOANED, REMITTED OR USED IN ANY OTHER MANNER WITHOUT THE EXPRESS WRITTEN CONSENT OF V.W.T AND THEIR LEGAL COUNSEL. V.W.T DISCLAIMS ANY LIABILITY FOR THE USE OF THIS DOCUMENT OR THE DESIGN CONCEPTS AND INFORMATION CONTAINED HEREIN FOR ANOTHER PROJECT, OTHER THAN THE ONE THAT THEY RELATE TO THE FITNESS OR PURPOSE OF THIS DOCUMENT. IN NO EVENT SHALL THIS DOCUMENT OR THE DESIGN CONCEPTS AND INFORMATION CONTAINED HEREIN BE USED IN A MANNER DETRIMENTAL TO THE INTEREST OF COPYRIGHT, PATENT AND OTHER INTELLECTUAL PROPERTY RIGHTS AND CLAIMS. ACCEPTANCE OF THE DELIVERY OF THIS DOCUMENT CONSTITUTES AGREEMENT TO THESE TERMS AND CONDITIONS

| | | |
|---|---|---|
| DESIGNER | – | DATE – |
| CHECKER | – | DATE – |
| ENGINEER | – | DATE – |
| SCALE: | N/A | |

TITLE
JB-001
CONTROL JUNCTION BOX
BILL OF MATERIAL

CLIENT
WWTP UPGRADE
CITY OF IQALUIT

VEOLIA
VEOLIA WATER TECHNOLOGIES CANADA INC. 4105 Sartelon, Saint-Laurent, Qc, Canada, Tel: (514) 334-7230

| PROJECT | DRAWING | INTERNAL | SHEET | REV |
|---|---|---|---|---|
| 5000218036-EPL | 0002-AU-VWT | – | 05 OF 05 | 1 |

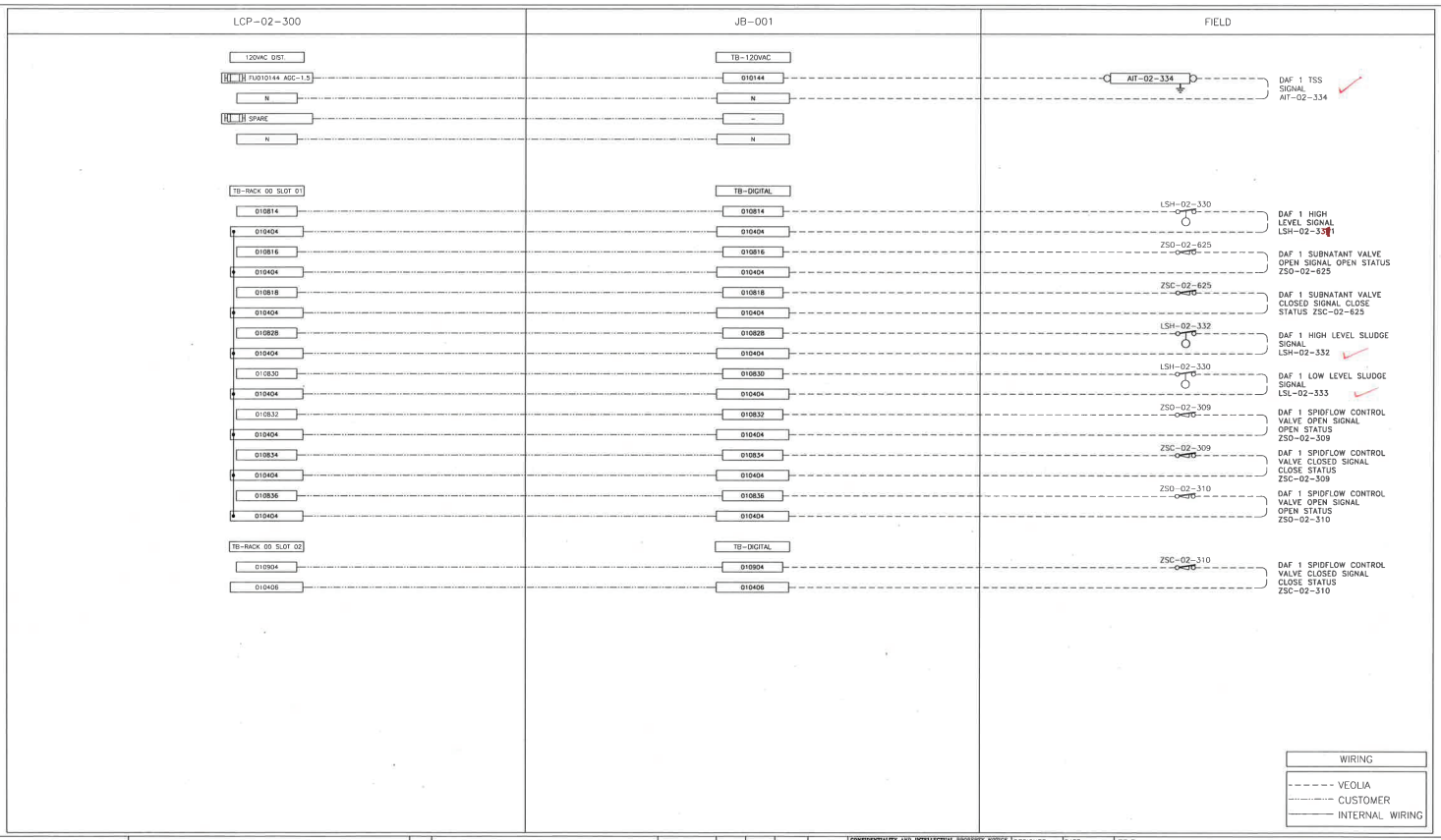


| REV | DESCRIPTION | DATE | REVD | CHKD | APVD | ECN |
|---|---|---|---|---|---|---|
| 1 | FOR APPROVAL | 2019-01-09 | HZ | RA | - | - |

**CONFIDENTIALITY AND INTELLECTUAL PROPERTY NOTICE**
ALL INFORMATION CONTAINED IN THIS DOCUMENT IS THE SOLE PROPERTY OF VEOLIA WATER TECHNOLOGIES CANADA INC. AND IS PROBLEM OF AN APPLICABLE LAW, REGARDING BUT NOT LIMITED TO COPYRIGHT AND OTHER INTELLECTUAL PROPERTY LAWS. THE DESIGN CONCEPTS AND INFORMATION CONTAINED HEREIN ARE PROPRIETARY TO VWT AND ARE SUBMITTED IN CONFIDENCE. THEY ARE NOT TRANSFERABLE. THEY MUST BE USED ONLY FOR THE PURPOSE FOR WHICH THE DOCUMENT IS EXPRESSLY SUBMITTED AND NO IMPLICIT LICENCE IS GRANTED OTHERWISE BY THE SUBMISSION OF THIS DOCUMENT. THEY ARE CONFIDENTIAL AND PRIVILEGED INFORMATION OF VWT. AND THEY MUST NOT BE DISCLOSED, REPRODUCED, COPIED, REMOVED OR USED IN ANY OTHER MANNER WITHOUT THE EXPRESS WRITTEN CONSENT OF VWT. VWT. ASSUMES NO RESPONSIBILITY OR LIABILITY FOR THE USE OF THIS DOCUMENT OR THE DESIGN CONCEPTS AND INFORMATION CONTAINED HEREIN FOR ANOTHER PROJECT, OR IN A MANNER THAT DOES NOT RELATE TO THE TERMS OR PURPOSE OF THIS DOCUMENT. IN NO EVENT SHALL THIS DOCUMENT OR THE DESIGN CONCEPTS AND INFORMATION CONTAINED HEREIN BE USED IN A MANNER DETRIMENTAL TO THE INTEREST OF VWT. ALL COPYRIGHT, PATENT AND OTHER INTELLECTUAL PROPERTY RIGHTS ARE RESERVED. ACCEPTANCE OF THE DELIVERY OF THIS DOCUMENT CONSTITUTES AGREEMENT TO THESE TERMS AND CONDITIONS.

| | |
|---|---|
| DESIGNER - | DATE - |
| CHECKER - | DATE - |
| ENGINEER - | DATE - |
| SCALE: N/A | |

TITLE: JB-001 CONTROL JUNCTION BOX FIELD WIRING

CLIENT: WWTP UPGRADE CITY OF IQALUIT

VEOLIA

VEOLIA WATER TECHNOLOGIES CANADA INC. 4105 Sartelon, Saint-Laurent, Qc, Canada. Tel: (514) 324-7230

| PROJECT | DRAWING | INTERNAL | SHEET | REV |
|---|---|---|---|---|
| 5000218036-EID | 0002-AU-VWT | - | 01 OF 02 | 1 |

BAR = 1" AT PLOT SCALE

REF: A6798A

STD: "B" 11x17

Jan 29, 2019 15:45:41 - G:\Projets A67XX\A6798A - VEOLIA - 5000218036 Iqaluit WWTP Upgrade\DOC\DESSIN\000-DRAWINGS\JB-001\5000218036-EID-0002-AU-VWT-001.dwg - roslani

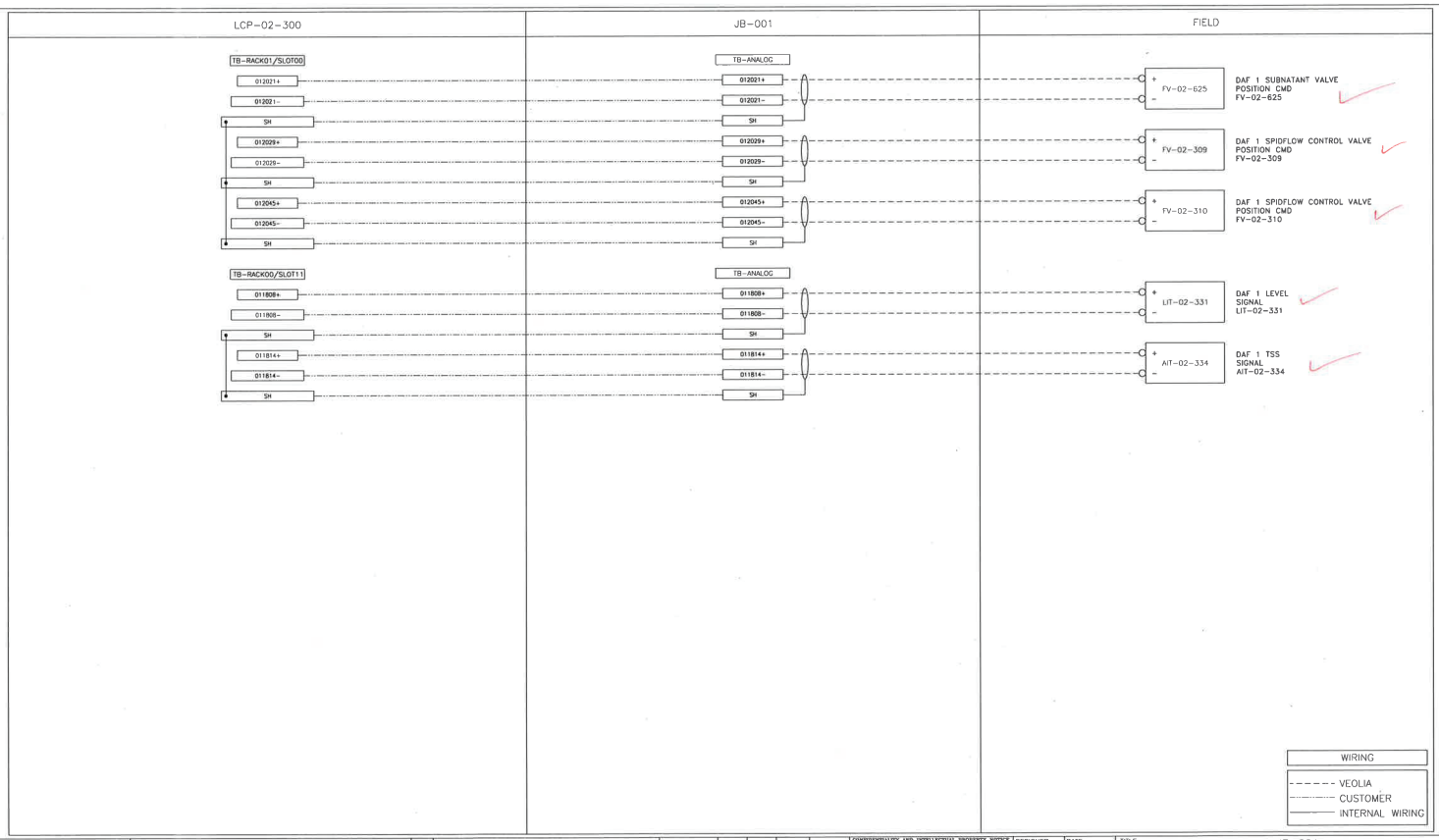


| REV | DESCRIPTION | DATE | REVD | CHKD | APVD | ECN |
|---|---|---|---|---|---|---|
| 1 | FOR APPROVAL | 2019-01-09 | HZ | RA | – | – |

CONFIDENTIALITY AND INTELLECTUAL PROPERTY NOTICE
ALL INFORMATION CONTAINED IN THIS DOCUMENT IS THE SOLE PROPERTY OF VEOLIA WATER TECHNOLOGIES CANADA INC. AND IS PROTECTED BY ALL APPLICABLE LAWS, INCLUDING BUT NOT LIMITED TO COPYRIGHT AND OTHER INTELLECTUAL PROPERTY LAWS. THE DESIGN CONCEPTS AND INFORMATION CONTAINED HEREIN ARE PROPRIETARY TO VWT AND ARE SUBMITTED IN CONFIDENCE. THEY ARE NOT TRANSFERABLE. THEY MUST BE USED ONLY FOR THE PURPOSE FOR WHICH THE DOCUMENT IS EXPRESSLY SUBMITTED AND NO IMPLICIT LICENCE IS GRANTED CONCERNING BY THE SUBMISSION OF THIS DOCUMENT. THEY ARE CONFIDENTIAL AND PRIVATELY INFORMATION OF VWT AND THEY MUST NOT BE DISCLOSED, REPRODUCED, LOANED, REMITTED OR USED IN ANY OTHER MANNER WITHOUT THE EXPRESS WRITTEN CONSENT OF VWT. VWT ASSUMES NO RESPONSIBILITY OR LIABILITY FOR THE USE OF THIS DOCUMENT OR THE DESIGN CONCEPTS AND INFORMATION CONTAINED HEREIN FOR ANOTHER PROJECT, OR IN A MANNER THAT DOES NOT RELATE TO THE FITNESS OR PURPOSE OF THIS DOCUMENT. IN NO EVENT SHALL THIS DOCUMENT OR THE DESIGN CONCEPTS AND INFORMATION CONTAINED HEREIN BE USED IN A MANNER DETRIMENTAL TO THE INTEREST OF VWT. ALL COPYRIGHT, PATENT AND OTHER INTELLECTUAL PROPERTY RIGHTS ARE RESERVED. ACCEPTANCE OF THE DELIVERY OF THIS DOCUMENT CONSTITUTES AGREEMENT TO THESE TERMS AND CONDITIONS.

| | |
|---|---|
| DESIGNER – | DATE – |
| CHECKER – | DATE – |
| ENGINEER – | DATE – |
| SCALE: N/A | |

TITLE: JB-001 CONTROL JUNCTION BOX FIELD WIRING

CLIENT: WWTP UPGRADE CITY OF IQALUIT

VEOLIA

VEOLIA WATER TECHNOLOGIES CANADA INC. 4105 Sartelon, Saint-Laurent, Qc, Canada. Tel: (514) 334-7230

| PROJECT | DRAWING | INTERNAL | SHEET | REV |
|---|---|---|---|---|
| 5000218036-EID | 0002-AU-VWT | – | 02 OF 02 | 1 |

BAR = 1" AT PLOT SCALE

REF: A6798A

STD: "B" 11x17

Jan 29, 2019 15:45:41 - G:\Projets A67XX\A6798A - VEOLIA - 5000218036 Iqaluit WWTP Upgrade\DOC\DESSIN\000-DRAWINGS\JB-001\5000218036-EID-0002-AU-VWT-002.dwg - rasloni

24VAC control circuit, 40VA class II transformer, fuse protected on output, heavy-duty across-the-line linear reversing contactor with mechanical interlock.

- **B2/C2 Units:**
  C2 wiring is standard. B2 can be set very easily by moving one wire. Available options: delay on reverse, timer to close, double limits, etc...
  Certifications: CSA C22.2-247.92 and compliant to UL325 5th Ed. PRIOR to August 2010 revision.

Note: CSA C22.2-247.92 and UL325 apply to units intended to be used in ordinary locations in accordance with the Canadian Electrical Code, Part I and the National Electrical Code, NFPA 70, respectively.

## Main Options

- **Control Accessories:**
Angled terminal strip allows for the connection of 3-button stations (one supplied with the operator), non-monitored sensing edges, non-monitored photo cells, one push-button radio control (external strip), ceiling pull switches, key switches, loop detectors, external interlocks, universal auxiliary output module. 2A fuse protected 24VAC output is available for accessory power supply. NEMA 4/12 or NEMA 4X protected monitored photo cells upgrade available.

- **Environmental Modifications:**
NEMA 4/12 and NEMA 4X enclosures. For NEMA 7/9, consult inside sales.

- **Mechanical Accessories:**
Wall or hood mounting bracket, chain spreader, etc...consult inside sales.

- **Mechanical Modifications:**
Left hand chain hoist, electrically activated drum-band type solenoid brake, cast iron flanged pillow block bearings on output shaft, limit shaft speed-up, etc...consult inside sales.

## Motor Selection

*Maximum Size of Door in Square Feet*

| Horse Power | Rolling Doors | | | | | Sectional Doors | | | | |
|---|---|---|---|---|---|---|---|---|---|---|
| | Insulated Steel | 16 ga. Steel | Steel Grilles 20 ga. Steel | Alu. Door 22 ga. Steel | Alu. Grilles 24 ga. Steel | Steel 18 ga. ins. | Steel 18 ga. 20 ga. ins. | Wood Steel 20 ga. 22 & 24 ga. ins. | Aluminum Steel 22 & 24 ga. | Fiber Glass |
| 1/2 | 157 | 236 | 260 | 319 | 358 | 196 | 245 | 314 | 343 | 392 |
| 3/4 | 206 | 294 | 358 | 451 | 515 | 270 | 319 | 441 | 490 | 549 |
| 1 | 255 | 358 | 446 | 574 | 613 | 294 | 392 | 490 | 564 | 613 |

General Guideline

## Operator Range

*Current Consumption (Amp.)*

| Horse Power | 120V 1 Ph | 240V 1Ph | 208/ 240V 3 Ph | 480V 3 Ph | 600V 3 Ph |
|---|---|---|---|---|---|
| 1/2 | 8.0 | 4.0 | 2.1 | 1.0 | 0.8 |
| 3/4 | 11.2 | 5.6 | 3.2 | 1.5 | 1.2 |
| 1 | 13.6 | 6.8 | 4.4 | 2.1 | 1.6 |

General Guideline

Manaras-Opera OPH SS 2011/04/21 Rev 8 - Printed in Canada

STANTEC PROJECT #: 110126045

SUBMITTAL # Overhead Door Operator

This review by Stantec is for general conformance with the design concept of Stantec's design of the:

- ☐ Architectural
- ☐ Structural
- ☐ Mechanical
- ☑ Electrical
- ☐ Other

Stantec

component(s) only and does not mean that Stantec has verified or approves the shop drawing(s). The Contractor remains solely responsible for the shop drawing(s) and this review by Stantec does not relieve the Contractor of the Contractor's responsibility for errors or omissions in the shop drawing(s) or for meeting all requirements of the contract documents. This review does not mean that Stantec approves the detailed design inherent in the shop drawing, responsibility for which shall remain with the Contractor submitting same, nor does this review mean that Stantec accepts any deviation of the shop drawing(s) from the contract documents. The Contractor is responsible for confirming all dimensions and correlating them at the job site, for all construction means, methods and techniques, and for coordination of construction work of all trades, including coordination of all shop drawings.

- ☑ REVIEWED
- ☐ REVIEWED, AS NOTED
- ☐ REVISE AND RESUBMIT
- ☐ NOT REVIEWED

DATE June 27, 2018

BY Chester Martinez, E.I.T.

REVIEWED BY CONTRACTOR

Kudlik Construction Ltd.

NAME: Sandra Rousseau P.Eng

DATE: Jul 03, 2018

NORCLAIR
MÉCANIQUE DE PROCÉDÉ

# TDS AND SHOP DRAWINGS

**DA-IC-01R1**-Ultrasonic level sensor and transducer **Date :** 2018-07-03

## INFORMATION

| | |
|---|---|
| Project : **WASTEWATER PLANT - IQALUIT** | |
| Client : Kudlik Construction Ltd.<br>To Sandra Rousseau P.Eng./ Project Manager | Project number : **2018-062** |
| Contractor : Norclair inc. | Project number Norclair : **P1039** |
| Address : 1100, Montee Masson, Laval, QC, Canada H7E 4P2 | |
| Project Manager : Dominic Papineau | E-mail: dpapineau@norclair.ca |
| Phone: 450-688-4012 # 720 | Cell.: 514-409-1832 |

## Information, subcontractor or supplier

| | |
|---|---|
| Sub supplier : VISION Solutions de Procédés | |
| Contact : Nacère Irid | Phone : 574-733-1800 #231 |

## Information on the equipment or the proposed materials

Speciality : Instruments and controls

Equipment :

Ultrasonic controllers Level Measurement no. SITRANS LUT420

and Level Measurement Echomax XPS Ultrasonic transducers

Drawing reference :

| | |
|---|---|
| Specification reference : 40 05 23 | Division : |
| Article : | Number Page : 20 |

## CONSULTANT APPROVAL

No comments

STANTEC PROJECT #: 110126045

SUBMITTAL # DA-IC-01 R1 (2018-07-03)

This review by Stantec is for general conformance with the design concept of Stantec's design of the:

☐ Architectural ☐ Structural ☐ Mechanical ☐ Electrical ☑ Other Instrumentation

component(s) only and does not mean that Stantec has verified or approves the shop drawing(s). The Contractor remains solely responsible for the shop drawing(s) and this review by Stantec does not relieve the Contractor of the Contractor's responsibility for errors or omissions in the shop drawing(s) or for meeting all requirements of the contract documents. This review does not mean that Stantec approves the detailed design inherent in the shop drawing, responsibility for which shall remain with the Contractor submitting same, nor does this review mean that Stantec accepts any deviation of the shop drawing(s) from the contract documents. The Contractor is responsible for confirming all dimensions and correlating them at the job site, for all construction means, methods and techniques, and for coordination of construction work of all trades, including coordination of all shop drawings.

Stantec

☑ REVIEWED

☐ REVIEWED, AS NOTED

☐ REVISE AND RESUBMIT

☐ NOT REVIEWED

DATE 2018-JUL-03

BY David Hutchison, P.Eng.

1100, Montée Masson
Laval, QC, Canada
H7E 4P2

Phone. : 450-688-4012
Fax : 450-661-6341
E-Mail : info@norclair.ca
www.norclair.ca

## Overview




The SITRANS LUT400 series controllers are compact, single point, long-range ultrasonic controllers for continuous level or volume measurement of liquids, slurries, solids, and high accuracy monitoring of open channel flow.

## Benefits

- Small 1/2 DIN enclosure [144 h x 144 d x 146 w mm (5.7 x 5.7 x 5.75 inch)] with standard universal mounting bracket for wall, pipe, and DIN rail, plus an optional panel mount
- Easy to use HMI display with local four-button programming, menu-driven parameters, and Wizard support for key applications
- English, German, French, Spanish, Chinese, Italian, Portuguese, and Russian texts on the HMI.
- Level, Volume, OCM Flow monitoring
- Three relays combined with a suite of pump, alarm, and relay control features
- HART Communications
- EDDs for SIMATIC PDM, AMS Device Manager, and Field Communicator 375/475, plus DTMs for FDTs (Field Device Tools)
- Web browser for local programming from an intuitive web-based interface
- Two discrete inputs for backup level override and pump interlock functions
- Echo profile and trend views from the local display
- Patented digital receiver for improved performance in electrically noisy applications (close proximity to VSDs)
- Real time clock with daylight savings time, supporting an integrated datalogger and energy saving algorithms for minimizing pump operation during high cost energy periods
- Removable terminal blocks for ease of wiring
- MCERTS Certified for Open Channel Flow

## Application

The SITRANS LUT400 comes in three different models, depending on the application, level of performance and functionality required:

- SITRANS LUT420 Level Controller: Level or volume measurement of liquids, slurries, and solids, as well as basic pump control functions, and basic data logging capability
- SITRANS LUT430 Level, Pump and Flow Controller: Includes all features of the LUT420 plus a full suite of advanced pump control and alarm functionality, open channel flow monitoring, and basic flow data logging capability
- SITRANS LUT440 High Accuracy OCM: Our most featured, highest accuracy model. Includes all features of the LUT430, plus the industry's best accuracy (± 1 mm within 3 m), full suite of advanced control functionality, and enhanced flow logging capability
- Key Applications: wet wells, reservoirs, flumes/weirs, chemical storage, liquid storage, hoppers, crusher bins, dry solids storage

© Siemens AG 2017



## Technical specifications

| | |
|---|---|
| **Mode of Operation** | Ultrasonic level, volume, pump, and open channel flow |
| Measuring range | 0.3 … 60 m (1 … 196 ft), transducer dependent |
| **Input** | |
| Discrete | 0 ... 50 V DC switching level<br>Logical 0 ≤ 10 V DC<br>Logical 1 = 10 ... 50 V DC<br>Max. 3 mA |
| **Output** | |
| Transducer frequency | 10 ... 52 kHz |
| Ultrasonic transducer | Compatible transducers: All Echo-Max and ST-H series transducers |
| Relays | • 1 SPDT Form C, NO or NC relay, rated 1A at 250 V AC, non-inductive and 3A at 30 V DC<br>• 2 SPST Form A, NO relays, rated 5A at 250 V AC, non-inductive and 3 A at 30 V DC |
| mA output | 4 … 20 mA, isolated |
| Max. load | 600 Ω max. in ACTIVE mode,<br>750 Ω max. in PASSIVE mode |
| Resolution | 0.1 % of range |
| **Accuracy** | |
| Error in measurement | • Standard operation: ± 1 mm (0.04 inch) plus 0.17 % of measured distance<br>• High accuracy OCM: ± 1 mm (0.04 inch), within 3 m (9.84 ft) range |
| Resolution | • Standard operation: 0.1 % of range or 2 mm (0.08 inch), whichever is greater<br>• High accuracy OCM: 0.6 mm (0.02 inch), within 3 m (9.84 ft) range |
| Temperature compensation | • -40 ... +150 °C (-40 ... +300 °F)<br>• Integral temperature sensor in transducer<br>• External TS-3 temperature sensor (optional)<br>• Programmable fixed temperature values |
| **Rated operating conditions** | |
| Installation conditions | |
| • Location | Indoor/outdoor |
| • Installation category | II |
| • Pollution degree | 4 |
| Ambient conditions | |
| • Ambient temperature (enclosure) | -20 … +50 °C (-4 … +122 °F) |

| | |
|---|---|
| **Design** | |
| Weight | |
| • Enclosure with display lid | 1.3 kg (2.87 lb) |
| • Enclosure with blank lid | 1.2 kg (2.65 lb) |
| Material (enclosure) | Polycarbonate |
| Degree of protection | |
| • Enclosure with display or blank lid | IP65/Type 4X/NEMA 4X |
| • Enclosure with blank lid and knock-out removed | IP20 |
| Remote display lid | IP65/Type 3/NEMA 3 |
| **Cable** | |
| Transducer and mA output signal | • Transducer, mA output: 2 copper conductors, twisted, with foil shield/drain wire, 300 V 0.5 … 0.75 mm² (22 … 18 AWG)<br>• Relay/power to be copper conductors per local requirements to meet 250 V 5 A contact rating |
| Max. separation between transducer and transceiver | 365 m (1 200 ft) |
| **Displays and controls** | 60 x 40 mm (2.36 x 1.57 inch) removable<br>LCD, 240 x 160 pixels resolution, operational up to 5 m from enclosure base |
| Programming | |
| • Primary | 4 Local push buttons |
| • Secondary | • PC running SIMATIC PDM<br>• PC running Emerson AMS Device Manager<br>• PC running a web browser<br>• PC running a Field Device Tool (FDT)<br>• Field Communicator 375/475 (FC375/FC475) |
| Memory | • 512 kB flash EPROM<br>• 1.5 MB flash for data logging |
| **Power supply** | |
| AC version | 100 ... 230 V AC ± 15 %,<br>50/60 Hz, 36 VA<br>Fuse: 5 x 20 mm, Slow Blow, 0.25 A, 250 V |
| DC version | 10 … 32 V DC, 10 W<br>Fuse: 5 x 20 mm, Slow Blow, 1.6 A, 125 V |
| **Certificates and approvals** | |
| General | $CSA_{US/C}$, CE, FM, UL listed, RCM, MCERTS certified for Open Channel Flow |
| Hazardous | |
| • Non-incendive (Canada) | CSA Class I, Div. 2, Groups A, B, C, D; Class II, Div. 2, Groups F, G; Class III |
| • Shipping | Lloyd's Register, ABS |
| **Communication** | HART 7.0, USB |

| | | SITRANS LUT420 | SITRANS LUT430 | SITRANS LUT440 |
|---|---|---|---|---|
| **Category** | **Feature** | **Level Controller** | **Level, pump and flow controller** | **High accuracy OCM controller** |
| **Operations** | Level, space, and distance measurement | ✓ | ✓ | ✓ |
| | Open channel flow measurement | | ✓ | ✓ |
| | Volume conversion | ✓ | ✓ | ✓ |
| **Specifications** | Compatible with EchoMax and ST-H transducers | ✓ | ✓ | ✓ |
| | Standard accuracy: ± 1 mm + 0.17 % of measured distance | ✓ | ✓ | ✓ |
| | High accuracy: ± 1 mm within 3 meters | | | ✓ |
| | Mounting options: wall or panel, pipe, DIN-rail | ✓ | ✓ | ✓ |
| **Data logging and communications** | HART communications | ✓ | ✓ | ✓ |
| | 4 ... 20 mA output (active and passive) | ✓ | ✓ | ✓ |
| | Integrated datalogger for measurement value and alarms | ✓ | ✓ | ✓ |
| | Integrated datalogger for fixed rate flow logging | | ✓ | ✓ |
| | Integrated datalogger for variable rate flow logging triggered by changes in flow condition | | | ✓ |
| | Daily data logging for maximum, minimum and average flow, daily totalized volume, and minimum and maximum temperature | | ✓ | ✓ |
| **Flow monitoring** | High accuracy open channel flow measurement | | | ✓ |
| | 9 digit daily and running flow totalizers | | ✓ | ✓ |
| | High and low flowrate alarms | | ✓ | ✓ |
| | External totalizer and sampler control | | ✓ | ✓ |
| | MCERTS Class 1 Certification | | | ✓ |
| | MCERTS Class 2 Certification | | ✓ | |
| **Pump control** | Energy saving algorithms for pump control | | ✓ | ✓ |
| | Wall cling reduction | ✓ | ✓ | ✓ |
| | Pump run-on functionality | | ✓ | ✓ |
| | Pump start and power resumption delays | | ✓ | ✓ |
| | Alternate duty pump routines | ✓ | ✓ | ✓ |
| | Fixed duty and service ratio pump routines | | ✓ | ✓ |
| | Pumped volume totalizer | | ✓ | ✓ |
| | Submergence detection | ✓ | ✓ | ✓ |
| | Discrete input pump interlocks | | ✓ | ✓ |
| | Time to spill calculation | | ✓ | ✓ |

© Siemens AG 2017



## SITRANS LUT400 series



| Selection and Ordering data | | Article No. |
|---|---|---|
| **SITRANS LUT420 and LUT430**<br>Compact ultrasonic level controllers for continuous short to long-range level or volume measurement of liquids, slurries, and solids. Both units include basic relay functions for pumps, alarms, and other controls, plus onboard data logging. LUT430 offers additional advanced pump control and alarm functionality, open channel flow monitoring, and basic flow data logging capability. Functionality varies by model.<br>↗ Click on the Article No. for the online configuration in the PIA Life Cycle Portal. | | **7ML5050-** 0 - 0 |
| **Model** | | |
| SITRANS LUT420 - Level controller | ⬟ | A |
| SITRANS LUT430 - Level, Pump & Flow controller | ⬟ | B |
| **Enclosure display options** | | |
| With display | ⬟ | A |
| With remote panel mount display [Includes panel mount cable extension, 2.5 m (8.2 ft)] | ⬟ | B |
| No display (blank lid provided)<br>Note: Enclosure includes back-plate for wall and pipe mounting, and an integrated clip for DIN-rail mounting. DIN-rail mounting for standard TS35 x 7.5 and TS35 x 15 mm DIN-rail to IEC 60715, EN 60715 | ⬟ | C |
| **Input voltage** | | |
| 100 ... 230 V AC ± 15 % | ⬟ | 1 |
| 10 ... 32 V DC | ⬟ | 2 |
| **Cable inlet** | | |
| 3 cable inlets, cable glands not supplied | ⬟ | 1 |
| 3 cable inlets, 3 M20 plastic cable glands supplied | ⬟ | 2 |
| **Number of measurement points** | | |
| Single point system (includes one transducer input, one mA output, and one external temperature sensor input) | ⬟ | 1 |
| **Communications and I/O** | | |
| HART, 2 discrete inputs, 3 relays | ⬟ | D |
| **Approvals** | | |
| General purpose CE, FM, $CSA_{US/C}$, UL, RCM | ⬟ | A |
| Hazardous locations CSA Class I, II, III, Div. 2, Groups A, B, C, D, F, G | | C |

⬟ We can offer shorter delivery times for configurations designated with the Quick Ship Symbol ⬟. For details see page 10/11 in the appendix.

| Selection and Ordering data | | Order code |
|---|---|---|
| ***Further designs*** | | |
| Please add "**-Z**" to Article No. and specify Order code(s). | | |
| Manufacturer's test certificate M to DIN 55350, Part 18 and to ISO 9000 | ⬟ | **C11** |
| Stainless steel tag [69 x 50 mm (2.71 x 1.97 inch)]: Measuring-point number/identification (max. 27 characters) specify in plain text | ⬟ | **Y15** |
| Namur NE43 failsafe setting - device preset to failsafe < 3.6 mA | ⬟ | **N07** |
| ***Operating Instructions*** | | Article No. |
| English | | **A5E33329501** |
| German | | **A5E35690863** |
| Note: The Operating Instructions should be ordered as a separate line item on the order.<br>All literature is available to download for free, in a range of languages, at http://www.siemens.com/processinstrumentation/documentation | | |

| Selection and Ordering data | Article No. |
|---|---|
| ***Accessories*** | |
| Tag, stainless steel, 12 x 45 mm (0.47 x 1.77 inch), one text line, suitable for enclosure | **7ML1930-1AC** |
| TS-3 Temperature Sensor - see TS-3 on page 4/181 | **7ML1813-...** |
| Panel mount cable extension, 2.5 m (8.2 ft) | **7ML1930-1GF** |
| Qty 3 cable glands and retaining nuts | **7ML1930-1GB** |
| USB cable, 2 m (6.56 ft) - Standard USB-A to USB-mini B | **7ML1930-1GD** |
| Hart modem/USB (for use with a PC and SIMATIC PDM) | **7MF4997-1DB** |
| Sunshield, 304 stainless steel | **7ML1930-1GE** |
| SITRANS RD100, loop powered display - see Chapter 7 | **7ML5741-...** |
| SITRANS RD200, universal input display with Modbus conversion - see Chapter 7 | **7ML5740-...** |
| SITRANS RD300, dual line display with totalizer and linearization curve and Modbus conversion - see Chapter 7 | **7ML5744-...** |
| SITRANS RD500 web, universal remote monitoring solution for instrumentation - see Chapter 7 | **7ML5750-...** |
| ***Spare parts*** | |
| Panel mount retrofit kit (convert standard unit with display to panel mount version) | **7ML1830-1PA** |
| Terminal block replacement kit (5 piece kit with one of each removable terminal) | **7ML1830-1PB** |
| Wall/Pipe mount plate | **7ML1830-1PC** |
| Enclosure (include blank label) | **7ML1830-1PD** |
| SITRANS LUT400 Lid (with Display) | **7ML1830-1PE** |
| SITRANS LUT400 Lid (blank) | **7ML1830-1PF** |
| Fuse - AC (0.25 A, 250 V, Slow Blow) | **7ML1830-1PG** |
| Fuse - DC (1.6 A, 125 V, Slow Blow) | **7ML1830-1PH** |
| Panel mount gasket and fastener kit | **7ML1830-1PK** |
| DIN-rail clip | **7ML1830-1PL** |

⬟ We can offer shorter delivery times for configurations designated with the Quick Ship Symbol ⬟. For details see page 10/11 in the appendix.

| Selection and Ordering data | Article No. |
|---|---|
| **SITRANS LUT440** ↗<br>The SITRANS LUT440 is the most accurate and featured model in the LUT400 series. It includes high accuracy open channel monitoring, relay functions for external samplers, totalizers, alarms, and enhanced data logging, as well as all pump and control functions available with other models in the LUT400 series.<br>↗ Click on the Article No. for the online configuration in the PIA Life Cycle Portal. | **7ML5050-** 0 ■■■■ - ■■■ 0 |
| **Model** | |
| SITRANS LUT440 - High accuracy Open Channel Monitor[1] ⬟ | C |
| **Enclosure display options** | |
| With display ⬟ | A |
| With remote panel mount display [includes panel mount cable extension, 2.5 m (8.2 ft)] ⬟ | B |
| No display (blank lid provided) ⬟ | C |
| Note: Enclosure includes back-plate for wall and pipe mounting, and an integrated clip for DIN-rail mounting. DIN-rail mounting for standard TS35 x 7.5 and TS35 x 15 mm DIN-rail to IEC 60715, EN 60715 | |
| **Input voltage** | |
| 100 ... 230 V AC ± 15 % ⬟ | 1 |
| 10 ... 32 V DC ⬟ | 2 |
| **Cable inlet** | |
| 3 cable inlets, cable glands not supplied ⬟ | 1 |
| 3 cable inlets, 3 M20 plastic cable glands supplied ⬟ | 2 |
| **Number of measurement points** | |
| Single point system (includes one transducer input, one mA output, and one external temperature sensor input) ⬟ | 1 |
| **Communications and I/O** | |
| HART, 2 discrete inputs, 3 relays ⬟ | D |
| **Approvals** | |
| General purpose CE, FM, $CSA_{US/C}$, UL, RCM ⬟ | A |
| Hazardous locations CSA Class I, II, III, Div. 2, Groups A, B, C, D, F, G | C |

[1] Compatible with all EchoMax Transducers. High accuracy OCM performance with the use of an XRS-5 transducer and TS-3 temperature sensor (each sold separately).

⬟ We can offer shorter delivery times for configurations designated with the Quick Ship Symbol ⬟. For details see page 10/11 in the appendix.

| Selection and Ordering data | Order code |
|---|---|
| ***Further designs*** | |
| Please add "**-Z**" to Article No. and specify Order code(s). | |
| Manufacturer's test certificate M to DIN 55350, Part 18 and to ISO 9000 ⬟ | **C11** |
| Stainless steel tag [69 x 50 mm (2.71 x 1.97 inch)]: ⬟ Measuring-point number/identification (max. 27 characters) specify in plain text | **Y15** |
| Namur NE43 failsafe setting - device preset to failsafe < 3.6 mA ⬟ | **N07** |
| ***Operating Instructions*** | Article No. |
| English | **A5E33329501** |
| German | **A5E35690863** |
| Note: The Operating Instructions should be ordered as a separate line item on the order. | |
| All literature is available to download for free, in a range of languages, at http://www.siemens.com/processinstrumentation/documentation | |

| Selection and Ordering data | Article No. |
|---|---|
| ***Accessories*** | |
| Tag, stainless steel, 12 x 45 mm (0.47 x 1.77 inch), one text line, suitable for enclosure | **7ML1930-1AC** |
| TS-3 Temperature Sensor - see TS-3 on page 4/181 | **7ML1813-...** |
| Panel mount cable extension 2.5 m (8.2 ft) | **7ML1930-1GF** |
| Qty 3 cable glands and retaining nuts | **7ML1930-1GB** |
| USB cable 2 m (6.56 ft) - Standard USB-A to USB-mini B | **7ML1930-1GD** |
| HART modem/USB (for use with PC and SIMATIC PDM) | **7MF4997-1DB** |
| Sunshield, 304 stainless steel | **7ML1930-1GE** |
| SITRANS RD100, loop powered display - see Chapter 7 | **7ML5741-...** |
| SITRANS RD200, universal input display with Modbus conversion - see Chapter 7 | **7ML5740-...** |
| SITRANS RD300, dual line display with totalizer and linearization curve and Modbus conversion - see Chapter 7 | **7ML5744-...** |
| SITRANS RD500 web, universal remote monitoring solution for instrumentation - see Chapter 7 | **7ML5750-...** |
| ***Spare parts*** | |
| Panel mount retrofit kit (convert standard unit with display to panel mount version) | **7ML1830-1PA** |
| Terminal block replacement kit (5 piece kit with one of each removable terminal) | **7ML1830-1PB** |
| Wall/Pipe mount plate | **7ML1830-1PC** |
| Enclosure (include blank label) | **7ML1830-1PD** |
| SITRANS LUT400 Lid (with Display) | **7ML1830-1PE** |
| SITRANS LUT400 Lid (blank) | **7ML1830-1PF** |
| Fuse - AC (0.25 A, 250 V, Slow Blow) | **7ML1830-1PG** |
| Fuse - DC (1.6 A, 125 V, Slow Blow) | **7ML1830-1PH** |
| Panel mount gasket and fastener kit | **7ML1830-1PK** |
| DIN-rail clip | **7ML1830-1PL** |

⬟ We can offer shorter delivery times for configurations designated with the Quick Ship Symbol ⬟. For details see page 10/11 in the appendix

© Siemens AG 2017



## Dimensional drawings

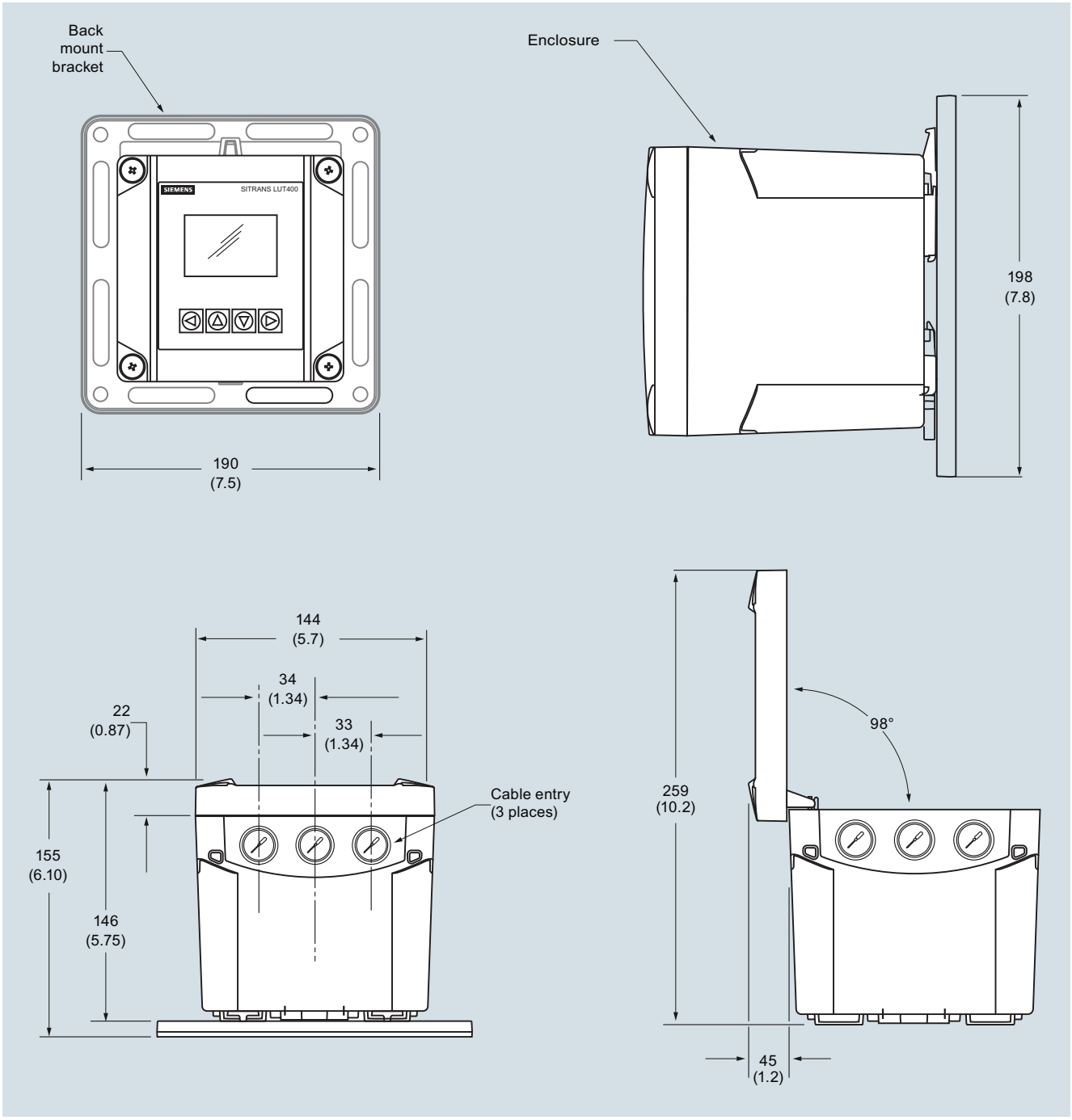


SITRANS LUT400, dimensions in mm (inch)

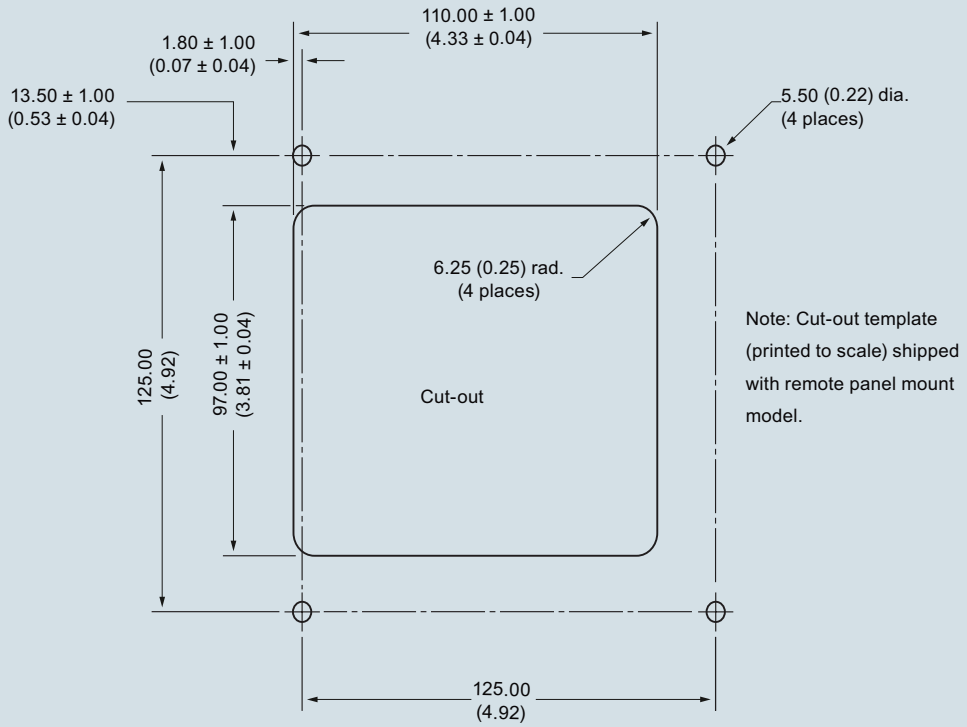


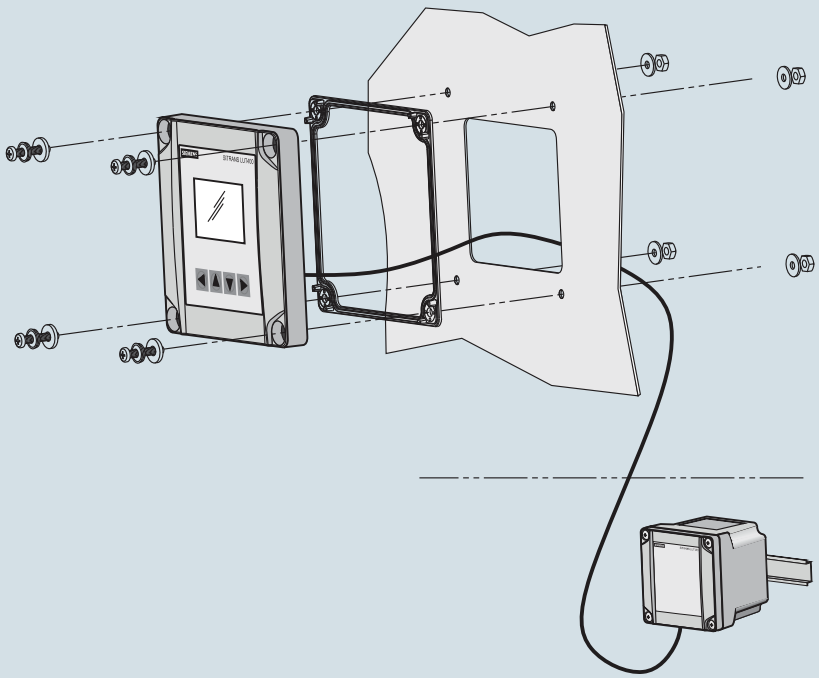

SITRANS LUT400, dimensions in mm (inch)

© Siemens AG 2017



4

## Schematics

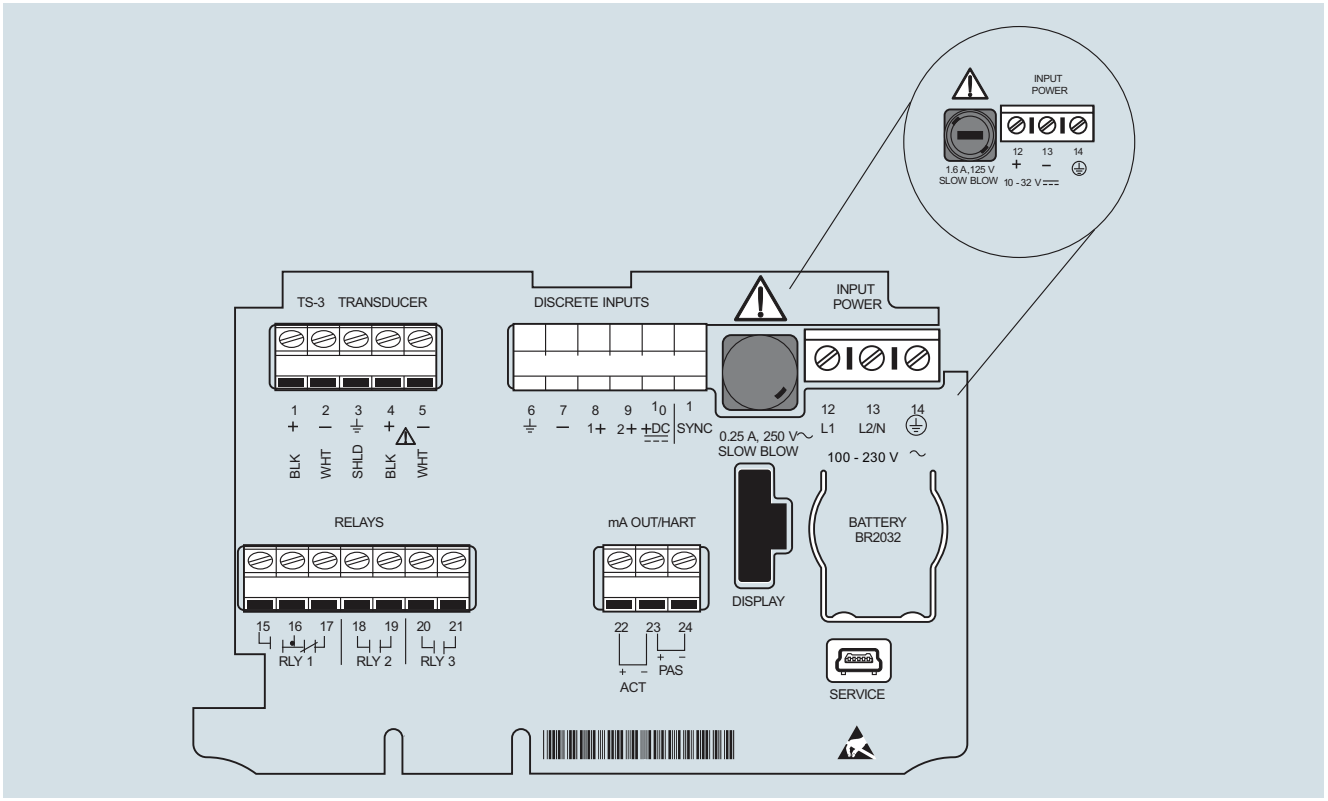


SITRANS LUT400 connections

© Siemens AG 2017



## Overview



EchoMax XPS transducers use ultrasonic technology to measure level in a wide range of liquids and solids.

## Benefits

- Integral temperature compensation
- Low ringing effect reduces blanking distance
- Optional foam facing for dusty applications
- Self-cleaning and low-maintenance
- Chemically resistant
- Hermetically sealed

## Application

XPS transducers can be fully immersed, are resistant to steam and corrosive chemicals, and can be installed without flanges.

The XPS series offers versions for various measuring ranges up to 30 m (100 ft) and up to a max. temperature of 95 °C (203 °F).

During operation, the EchoMax transducers emit acoustic pulses in a narrow beam. The level monitor measures the propagation time between pulse emission and its reflection (echo) to calculate the distance.

## Technical specifications

| Input | XPS-10 | XPS-15 (standard and F models) | XPS-30 |
|---|---|---|---|
| Measuring range | 0.3 ... 10 m (1 ... 33 ft) | Standard:<br>0.3 ... 15 m (1 ... 50 ft)<br>XPS-15F:<br>0.45 ... 15 m (1.5 ... 50 ft) | 0.6 ... 30 m (2 ... 100 ft) |
| **Output** | | | |
| Frequency | 44 kHz | 44 kHz | 30 kHz |
| Beam angle | 12° | 6° | 6° |
| **Environmental** | | | |
| Location | Indoors/outdoors | | |
| Ambient temperature | -40 ... +95 °C (-40 ... +203 °F) | Standard:<br>-40 ... +95 °C (-40 ... +203 °F)<br>XPS-15F:<br>-20 ... +95 °C (-4 ... +203 °F) | -40 ... +95 °C (-40 ... +203 °F) |
| Pollution degree | 4 | | |
| Pressure | 8 bar g (120 psi g)<br>Flanged:<br>0.5 bar g (7.25 psi g) | 8 bar g (120 psi g)<br>Flanged:<br>0.5 bar g (7.25 psi g) | 0.5 bar g (7.25 psi g)<br>Flanged:<br>0.5 bar g (7.25 psi g) |
| **Design** | | | |
| Weight | 0.8 kg (1.8 lb) | 1.3 kg (2.8 lb)<br>Flanged:<br>2 kg (4.4 lb) | 4.3 kg (9.5 lb) |
| Power supply | Operation of transducer only with approved Siemens controllers | | |
| Material | Standard: PVDF<br>Flanged: PVDF with CPVC flange<br>Option: PTFE face with CPVC flange | Standard: PVDF<br>Flanged: PVDF with CPVC flange<br>Option: PTFE face with CPVC flange | Standard: PVDF<br>Flanged: PVDF with CPVC flange<br>Option: PTFE face with CPVC flange |
| Color | Blue | Standard: Blue<br>XPS-15F: Gray | Blue |
| Process connection | 1" NPT or 1" BSPT | Standard: 1" NPT or 1" BSPT<br>XPS-15F: 1" NPT | 1.5" universal thread (NPT or BSPT) |
| Degree of protection | IP66/68 | IP66/68 | IP66/68 |
| Cable | 2-wire twisted pair/braided and foil shielded 0.5 $mm^2$ (20 AWG) PVC jacket | | |
| Separation | Max. 365 m (1 200 ft) | | |
| **Certificates and approvals** | Standard:<br>CE, CSA, FM, ATEX, IECEx | Standard:<br>CE, CSA, FM, ATEX, IECEx<br>XPS-15F:<br>FM Class I, Div. 1, Groups A, B, C, and D, Class II Div. 1, Groups E, F, and G, Class III | CE, CSA, FM, ATEX, IECEx |

1) EMC certificate available on request.

© Siemens AG 2017



## EchoMax XPS

| Selection and Ordering data | | Article No. |
|---|---|---|
| **EchoMax XPS-10 ultrasonic transducer** | ↗ | **7ML1115-** |
| High-frequency ultrasonic transducer designed for a wide variety of liquid and solid applications, for use with approved controllers. Includes integral temperature sensor.<br>Measuring range: min. 0.3 m, max.10 m | | ■■■■ **0** |
| ↗ Click on the Article No. for the online configuration in the PIA Life Cycle Portal. | | |
| **Mounting thread and facing** | | |
| 1" NPT [(Taper), ANSI/ASME B1.20.1] | ⬟ | **0** |
| 1" NPT [(Taper), ANSI/ASME B1.20.1] with foam facing[1] | | **1** |
| 1" NPT [(Taper), ANSI/ASME B1.20.1] with PTFE facing[2] | | **2** |
| R 1" [(BSPT), EN 10226] | ⬟ | **3** |
| R 1" [(BSPT), EN 10226] with foam facing[1] | | **4** |
| R 1" [(BSPT), EN 10226] with PTFE facing[2] | | **5** |
| **Cable length** | | |
| 5 m (16.40 ft) | ⬟ | **B** |
| 10 m (32.81 ft) | ⬟ | **C** |
| 30 m (98.43 ft) | ⬟ | **E** |
| 50 m (164.04 ft) | | **F** |
| 100 m (328.08 ft) | | **K** |
| **Mounting flange** | | |
| None | ⬟ | **A** |
| 3" ASME, 150 lb, flat faced | | **C** |
| 4" ASME, 150 lb, flat faced | | **D** |
| 6" ASME, 150 lb, flat faced | | **E** |
| 8" ASME, 150 lb, flat faced | | **F** |
| DN 80, PN 10/16, Type A, flat faced | | **G** |
| DN 100, PN 10/16, Type A, flat faced | | **J** |
| DN 150, PN 10/16, Type A, flat faced | | **L** |
| JIS10K3B Style | | **M** |
| JIS10K4B Style | | **P** |
| JIS10K6B Style<br>(Note: Flange bolting patterns and facings dimensionally correspond to the applicable ASME B16.5 or EN 1092-1, or JIS B 2220 standard.) | | **R** |
| **Approvals** | | |
| ATEX 2GD Ex mb IIC T4 Gb, Ex tb IIIC T135 °C Db; IECEx SIR 13.0009X Ex mb IIC T4 Gb, Ex tb IIIC T135 °C Db; FM Class I, Div. 2, Groups A, B, C, D; Class II, Div. 1, Groups E, F, G; Class III | ⬟ | **3** |
| CSA Class I, Div. 1, Groups A, B, C, D, Class II, Div. 1, Groups E, F, G, Class III[3] | ⬟ | **4** |

[1] Not available with flanged versions
[2] Available with flanged versions only
[3] Valid with mounting thread and facing options 0 ... 2 only

⬟ We can offer shorter delivery times for configurations designated with the Quick Ship Symbol ⬟. For details see page 10/11 in the appendix.

| Selection and Ordering data | Order code |
|---|---|
| ***Further designs*** | |
| Please add "**-Z**" to Article No. and specify Order code(s). | |
| Stainless steel tag [69 x 50 mm (2.71 x 1.97 inch)]: Measuring point number/ identification (max. 27 characters) specify in plain text | **Y15** |
| ***Operating Instructions*** | Article No. |
| Quick Start guide, multi-language | **A5E32282889** |
| Note: The Operating Instructions should be ordered as a separate line item on the order. | |
| All literature is available to download for free, in a range of languages, at http://www.siemens.com/processinstrumentation/documentation | |
| ***Accessories*** | |
| Tag, stainless steel with hole, 12 x 45 mm (0.47 x 1.77 inch), one text line for fastening on sensors | **7ML1930-1BJ** |
| Submergence shield kit | **7ML1830-1BH** |
| Easy Aimer 2, aluminum, NPT with ¾" x 1" PVC coupling | **7ML1830-1AQ** |
| Easy Aimer 2, aluminum with M20 adapter and 1" and 1½" BSPT aluminum couplings | **7ML1830-1AX** |
| Easy Aimer 304, NPT with 1" stainless steel coupling | **7ML1830-1AU** |
| Easy Aimer 304, with M20 adapter and 1" and 1½" BSPT 304 stainless steel couplings | **7ML1830-1GN** |
| Universal box bracket, mounting kit | **7ML1830-1BK** |
| Channel bracket, wall mount | **7ML1830-1BL** |
| Extended channel bracket, wall mount | **7ML1830-1BM** |
| Channel bracket, floor mount | **7ML1830-1BN** |
| Extended channel bracket, floor mount | **7ML1830-1BP** |
| Bridge channel bracket, floor mount (see Mounting Brackets on page 4/179 for more information) | **7ML1830-1BQ** |
| 1" NPT locknut, plastic | **7ML1830-1DS** |
| 1" BSPT locknut, plastic | **7ML1830-1DR** |
| Plastic adapter 1" BSP - 20 mm | **7ML1830-1EA** |
| Plastic adapter 1" NPT | **7ML1930-1FX** |
| Plastic adapter 1" NPT/M20 | **7ML1830-1EF** |

| Selection and Ordering data | | Article No. |
|---|---|---|
| **EchoMax XPS-15 ultrasonic transducer**<br>High-frequency ultrasonic transducer designed for a wide variety of liquid and solid applications, for use with approved controllers. Includes integral temperature sensor.<br>Measuring range: min. 0.3 m, max. 15 m | | **7ML1118-** ■■■■ **0** |
| ↗ Click on the Article No. for the online configuration in the PIA Life Cycle Portal. | | |
| **Mounting thread and facing** | | |
| 1" NPT [(Taper), ANSI/ASME B1.20.1] | ⬟ | **0** |
| 1" NPT [(Taper), ANSI/ASME B1.20.1] with foam facing[1] | | **1** |
| 1" NPT [(Taper), ANSI/ASME B1.20.1] with PTFE facing[2] | | **2** |
| R 1" [(BSPT), EN 10226] | ⬟ | **3** |
| R 1" [(BSPT), EN 10226] with foam facing[1] | | **4** |
| R 1" [(BSPT), EN 10226] with PTFE facing[2] | | **5** |
| **Cable length** | | |
| 5 m (16.40 ft) | ⬟ | **B** |
| 10 m (32.81 ft) | ⬟ | **C** |
| 30 m (98.43 ft) | ⬟ | **E** |
| 50 m (164.04 ft) | | **F** |
| 100 m (328.08 ft) | | **K** |
| **Mounting flange** | | |
| None | ⬟ | **A** |
| 6" ASME, 150 lb, flat faced | | **D** |
| 8" ASME, 150 lb, flat faced | | **E** |
| DN 150, PN 10/16, Type A, flat faced | | **J** |
| DN 200, PN 10, Type A, flat faced | | **K** |
| JIS10K 6B | | **N** |
| JIS10K 8B | | **P** |
| (Note: Flange bolting patterns and facings dimensionally correspond to the applicable ASME B16.5 or EN 1092-1, or JIS B 2220 standard.) | | |
| **Approvals** | | |
| ATEX 2GD Ex mb IIC T4 Gb, Ex tb IIIC T135 °C Db; IECEx SIR 13.0009X Ex mb IIC T4 Gb, Ex tb IIIC T135 °C Db; FM Class I, Div. 2, Groups A, B, C, D; Class II, Div. 1, Groups E, F, G; Class III | ⬟ | **3** |
| CSA Class I, Div. 1, Groups A, B, C, D, Class II, Div. 1, Groups E, F, G, Class III[3] | ⬟ | **4** |

1) Not available with flanged versions
2) Available with flanged versions only
3) Available with mounting options 0 ... 2 only

⬟ We can offer shorter delivery times for configurations designated with the Quick Ship Symbol ⬟. For details see page 10/11 in the appendix.

| Selection and Ordering data | Order code |
|---|---|
| ***Further designs*** | |
| Please add "**-Z**" to Article No. and specify Order code(s). | |
| Stainless steel tag [69 x 50 mm (2.71 x 1.97 inch)]: ⬟<br>Measuring point number/ identification<br>(max. 27 characters) specify in plain text | **Y15** |
| ***Operating Instructions*** | Article No. |
| Quick Start guide, multi-language | **A5E32282889** |
| Note: The Operating Instructions should be ordered as a separate line item on the order. | |
| All literature is available to download for free, in a range of languages, at http://www.siemens.com/processinstrumentation/documentation | |
| ***Accessories*** | |
| Tag, stainless steel with hole, 12 x 45 mm (0.47 x 1.77 inch), one text line for fastening on sensors | **7ML1930-1BJ** |
| Submergence shield kit | **7ML1830-1BJ** |
| Universal box bracket, mounting kit | **7ML1830-1BK** |
| Channel bracket, wall mount | **7ML1830-1BL** |
| Extended channel bracket, wall mount | **7ML1830-1BM** |
| Channel bracket, floor mount | **7ML1830-1BN** |
| Extended channel bracket, floor mount | **7ML1830-1BP** |
| Bridge channel bracket, floor mount (see Mounting Brackets on page 4/179 for more information) | **7ML1830-1BQ** |
| 1" NPT locknut, plastic | **7ML1830-1DS** |
| 1" BSPT locknut, plastic | **7ML1830-1DR** |
| Easy Aimer 2, aluminum, NPT with ¾" x 1" PVC coupling | **7ML1830-1AQ** |
| Easy Aimer 2, aluminum with M20 adapter and 1" and 1½" BSPT aluminum couplings | **7ML1830-1AX** |
| Easy Aimer 304, NPT with 1" stainless steel coupling | **7ML1830-1AU** |
| Easy Aimer 304, with M20 adapter and 1" and 1½" BSPT 304 stainless steel couplings | **7ML1830-1GN** |
| Plastic adapter 1" BSP - 20 mm | **7ML1830-1EA** |
| Plastic adapter 1" NPT | **7ML1930-1FX** |
| Plastic adapter 1" NPT/M20 | **7ML1830-1EF** |

⬟ We can offer shorter delivery times for configurations designated with the Quick Ship Symbol ⬟. For details see page 10/11 in the appendix.

© Siemens AG 2017



## EchoMax XPS

| Selection and Ordering data | Article No. |
|---|---|
| **EchoMax XPS-15F ultrasonic transducer** ↗<br>High-frequency ultrasonic transducer designed for a wide variety of liquid and solid applications, for use with approved controllers. Includes integral temperature sensor.<br>Measuring range: min. 0.45 m, max. 15 m<br>↗ Click on the Article No. for the online configuration in the PIA Life Cycle Portal. | **7ML1171-** ■■■■ **0** |
| **Mounting thread and facing** | |
| 1" NPT [(Taper), ANSI/ASME B1.20.1] | **1** |
| **Cable length** | |
| 5 m (16.40 ft) | **B** |
| 10 m (32.81 ft) | **C** |
| 30 m (98.43 ft) | **D** |
| 50 m (164.04 ft) | **E** |
| 100 m (328.08 ft) | **F** |
| **Mounting flange, flush mount** | |
| None | **A** |
| 6" ASME, 150 lb, flat faced | **B** |
| 8" ASME, 150 lb, flat faced<br>(Note: Flange bolting patterns and facings dimensionally correspond to the applicable ASME B16.5, or EN 1092-1, or JIS B 2220 standard.) | **C** |
| **Approvals** | |
| FM Class I, Div. 1, Groups A, B, C, and D, Class II Div. 1, Groups E, F, and G, Class III | **1** |

| Selection and Ordering data | Order code |
|---|---|
| ***Further designs***<br>Please add "**-Z**" to Article No. and specify Order code(s). | |
| Stainless steel tag [69 x 50 mm (2.71 x 1.97 inch)]: Measuring point number/ identification (max. 27 characters) specify in plain text | **Y15** |
| ***Operating Instructions***<br>All literature is available to download for free, in a range of languages, at http://www.siemens.com/processinstrumentation/documentation | |
| ***Accessories*** | Article No. |
| Tag, stainless steel with hole, 12 x 45 mm (0.47 x 1.77 inch), one text line for fastening on sensors | **7ML1930-1BJ** |
| Submergence shield kit | **7ML1830-1BJ** |
| Universal box bracket, mounting kit | **7ML1830-1BK** |
| Channel bracket, wall mount | **7ML1830-1BL** |
| Extended channel bracket, wall mount | **7ML1830-1BM** |
| Channel bracket, floor mount | **7ML1830-1BN** |
| Extended channel bracket, floor mount | **7ML1830-1BP** |
| Bridge channel bracket, floor mount (see Mounting Brackets on page 4/179 for more information) | **7ML1830-1BQ** |
| 1" NPT locknut, plastic | **7ML1830-1DS** |
| Easy Aimer 2, aluminum, NPT with ¾" x 1" PVC coupling | **7ML1830-1AQ** |
| Easy Aimer 304, NPT with 1" stainless steel coupling | **7ML1830-1AU** |

| Selection and Ordering data | Article No. |
|---|---|
| **EchoMax XPS-30 ultrasonic transducer** ↗<br>High-frequency ultrasonic transducer designed for a wide variety of liquid and solid applications, for use with approved controllers. Includes integral temperature sensor.<br>1½" universal thread compatible with 1½" NPT and R 1½" [(BSPT), EN 10226]<br>Measuring range: min. 0.6 m (1.97 ft), max. 30 m (98.43 ft)<br>↗ Click on the Article No. for the online configuration in the PIA Life Cycle Portal. | **7ML1123-** ■■■■ **0** |
| **Mounting thread and facing** | |
| 1½" universal thread | **0** |
| 1½" universal thread, foam facing[1] | **1** |
| 1½" universal thread, PTFE facing[2] | **2** |
| **Cable length** | |
| 5 m (16.40 ft) | **B** |
| 10 m (32.81 ft) | **C** |
| 30 m (98.43 ft) | **E** |
| 50 m (164.04 ft) | **F** |
| 100 m (328.08 ft) | **K** |
| **Mounting flange** | |
| None | **A** |
| 6" ASME, 150 lb, flat faced | **D** |
| 8" ASME, 150 lb, flat faced | **E** |
| DN 150, PN 10/16, Type A, flat faced | **J** |
| DN 200, PN 10, Type A, flat faced | **K** |
| JIS10K 6B | **N** |
| JIS10K 8B<br>(Note: Flange bolting patterns and facings dimensionally correspond to the applicable ASME B16.5 or EN 1092-1, or JIS B 2220 standard.) | **P** |
| **Approvals** | |
| ATEX 2G 1D Ex mb IIC T4 Gb, Ex ta IIIC T135 °C Da; IECEx SIR 13.0009X Ex mb IIC T4 Gb, Ex ta IIIC T135 °C Da | **5** |

[1] Not available with flanged versions

[2] Available with flanged versions only

| Selection and Ordering data | Order code |
|---|---|
| ***Further designs*** | |
| Please add "**-Z**" to Article No. and specify Order code(s). | |
| Stainless steel tag [69 x 50 mm (2.71 x 1.97 inch)]: measuring-point number/identification (max. 27 characters) specify in plain text | **Y15** |
| ***Operating Instructions*** | Article No. |
| Quick Start guide, multi-language | **A5E32282889** |
| Note: The Operating Instructions should be ordered as a separate line item on the order. | |
| All literature is available to download for free, in a range of languages, at http://www.siemens.com/processinstrumentation/documentation | |
| ***Accessories*** | |
| Tag, stainless steel with hole, 12 x 45 mm (0.47 x 1.77 inch), one text line for fastening on sensors | **7ML1930-1BJ** |
| 1½" BSPT locknut, plastic | **7ML1830-1DP** |
| Easy Aimer 2, aluminum, NPT with 1½" galvanized coupling | **7ML1830-1AN** |
| Easy Aimer 304, NPT with 1½" stainless steel coupling | **7ML1830-1AT** |
| Easy Aimer 2, aluminum with M20 adapter and 1" and 1½" BSPT aluminum couplings | **7ML1830-1AX** |
| Easy Aimer 304, with M20 adapter and 1" and 1½" BSPT 304 stainless steel couplings | **7ML1830-1GN** |
| Adapter 1½" BSP | **7ML1830-1EB** |

| Selection and Ordering data | Article No. |
|---|---|
| **EchoMax XPS-30C ultrasonic transducer** ↗<br>High-frequency ultrasonic transducer designed for a wide variety of liquid and solid applications, for use with approved controllers. Includes integral temperature sensor.<br>1½" universal thread compatible with 1½" NPT and R 1½" [(BSPT), EN 10226]<br>Measuring range: min. 0.6 m (1.97 ft), max. 30 m (98.43 ft) | **7ML1155-** ■■■■ **1** |
| ↗ Click on the Article No. for the online configuration in the PIA Life Cycle Portal. | |
| **Mounting thread and facing** | |
| 1½" universal thread | **0** |
| 1½" universal thread, foam facing[1] | **1** |
| 1½" universal thread, PTFE facing[2] | **2** |
| **Cable length** | |
| 5 m (16.40 ft) | **B** |
| 10 m (32.81 ft) | **C** |
| 30 m (98.43 ft) | **E** |
| 50 m (164.04 ft) | **F** |
| 100 m (328.08 ft) | **K** |
| **Mounting flange** | |
| None | **A** |
| 6" ASME, 150 lb, flat faced | **D** |
| 8" ASME, 150 lb, flat faced | **E** |
| DN 150, PN 10/16, Type A, flat faced | **J** |
| DN 200, PN 10, Type A, flat faced | **K** |
| JIS10K 6B | **N** |
| JIS10K 8B<br>(Note: Flange bolting patterns and facings dimensionally correspond to the applicable ASME B16.5 or EN 1092-1, or JIS B 2220 standard.) | **P** |
| **Approvals** | |
| CSA, Class I, Div. 2, Groups A, B, C, D; Class II, Div. 1, Groups E, F, G; Class III | **4** |

| Selection and Ordering data | Order code |
|---|---|
| ***Further designs*** | |
| Please add "**-Z**" to Article No. and specify Order code(s). | |
| Stainless steel tag [69 mm x 50 mm (2.71 x 1.97 inch)]: Measuring-point number / identification (max. 27 characters) specify in plain text | **Y15** |
| ***Operating Instructions*** | Article No. |
| Quick Start guide, multi-language | **A5E32282889** |
| Note: The Operating Instructions should be ordered as a separate line item on the order. | |
| All literature is available to download for free, in a range of languages, at http://www.siemens.com/processinstrumentation/documentation | |
| ***Accessories*** | |
| Easy Aimer 2, aluminum, NPT with 1½" galvanized coupling | **7ML1830-1AN** |
| Easy Aimer 304, NPT with 1½" stainless steel coupling | **7ML1830-1AT** |
| 1½" BSPT locknut, plastic | **7ML1830-1DP** |
| Adapter 1½" BSP | **7ML1830-1EB** |

[1] Not available with flanged version
[2] Available for flanged versions only

4

© Siemens AG 2017



## Dimensional drawings

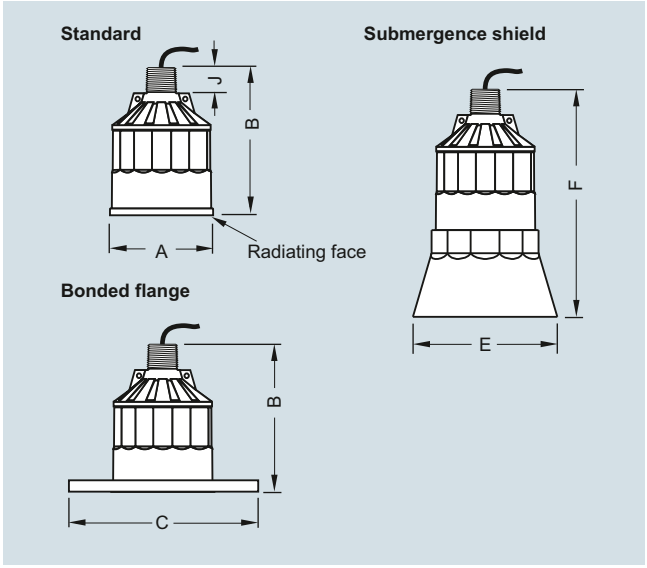


XPS ultrasonic transducer

| Version | | | |
|---|---|---|---|
| **Dimension** | **XPS-10** | **XPS-15** | **XPS-30** |
| **A** | 88 mm (3.464 inch) | 121 mm (4.764 inch) | 175 mm (6.890 inch) |
| **B** | 122 mm (4.803 inch) | 132 mm (5.197 inch) | 198 mm (7.795 inch) |
| **C** | According to ASME, DIN, and JIS | | |
| **E** | 124 mm (4.882 inch) | 158 mm (6.220 inch) | n/a |
| **F** | 152 mm (5.984 inch) | 198 mm (7.795 inch) | n/a |
| **J** | 28 mm (1.1 inch) | 28 mm (1.1 inch) | 28 mm (1.1 inch) |

## Schematics

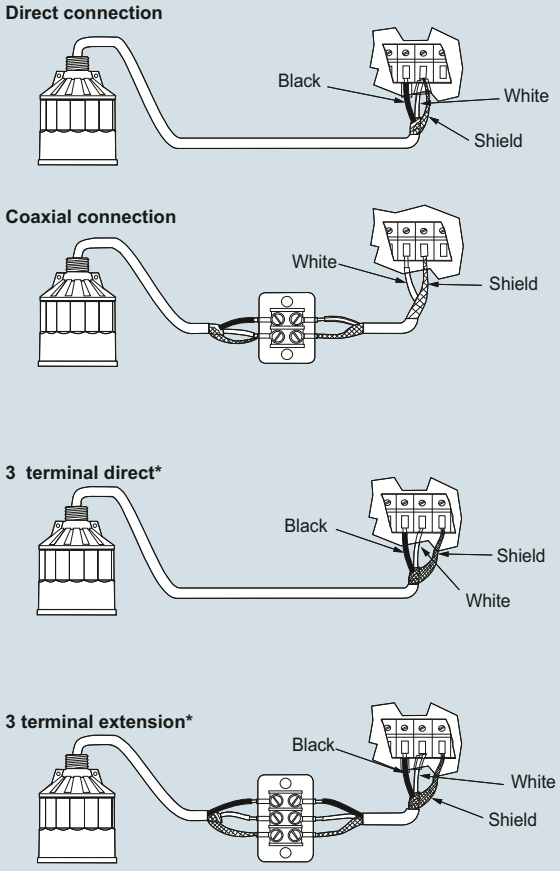


* For SITRANS LUT400, MultiRanger 100/200, HydroRanger 200

**Mounting**
Make particularly sure that the radiating face of the transducer is protected from damage. Mount the transducer so that it is above the maximum material level by at least the blanking value. On liquid applications, the transducer must be mounted so that the axis of transmission is perpendicular to the liquid surface. On solids applications, an Easy Aimer should be used to facilitate aiming the transducer. Consider the optional temperature sensor when mounting the transducer.

**Interconnection**
Do not route cable openly or near high voltage or current runs, contactors and SCR control drives. For optimum isolation against electrical noise, run cable separately in a grounded metal conduit. Seal all thread connections to prevent ingress of moisture.

XPS ultrasonic transducer connections

## Application

### *EA 304 aiming device*

The Easy Aimer 304 flange is a stainless steel aiming device for alignment of Siemens ultrasonic transducers used for level measurement of bulk solids.

The sensor must be mounted aimed towards the low level draw point in the silo. The sensor can be rotated through 360° and angled at 0 to 27° off vertical. It must be mounted using an access plate with welded studs or a flange in order to isolate the mounting holes from the pressurized environment. When installed properly, the EA 304 aiming device is capable of withstanding pressures up to 0.5 bar (Europe) or 15 psi (North America). It can even be used in corrosive and aggressive environments.

## Application

### *EA 2 aiming device*

The Easy Aimer 2 flange is a cast aluminum aiming device for alignment of Siemens ultrasonic transducers.

The flange has graduated adjustments and an adjustable insertion length. When used for applications with bulk solids, the sensor is mounted so that it is aimed towards the lower level draw point in the silo. The sensor can be rotated through 360° and angled at 0 to 20° off vertical. It must be mounted using an access plate with welded studs or a flange in order to isolate the mounting holes from the pressurized environment. When installed properly, the EA 2 aiming device is capable of withstanding pressures up to 0.5 bar (Europe) or 15 psi (North America). It can even be used in corrosive and aggressive environments.

## Dimensional drawings

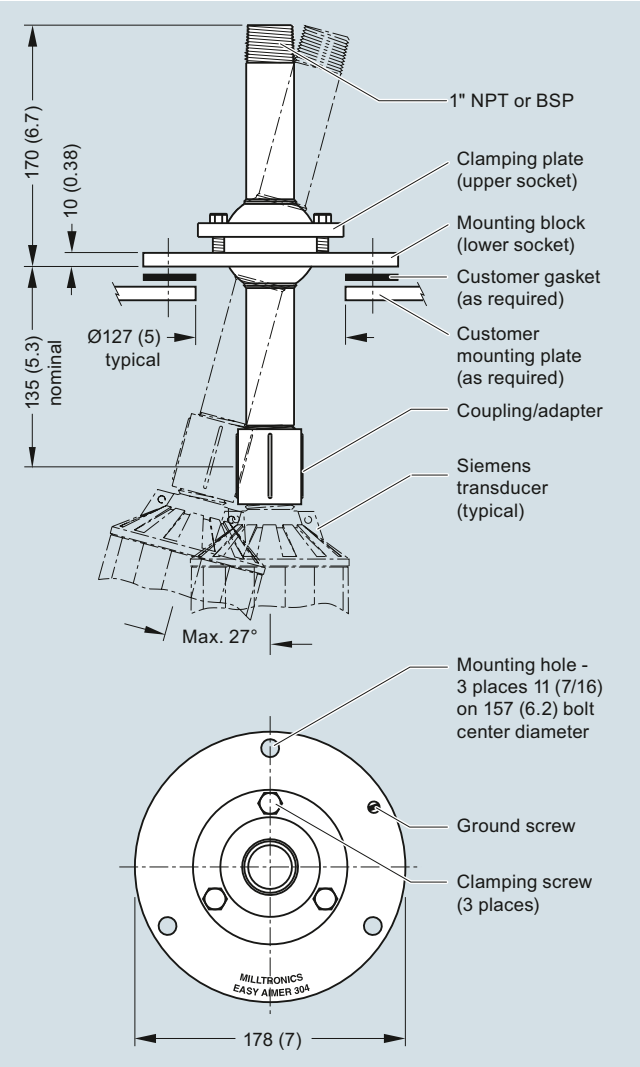


EA 304 aiming device, dimensions in mm (inch)

## Dimensional drawing

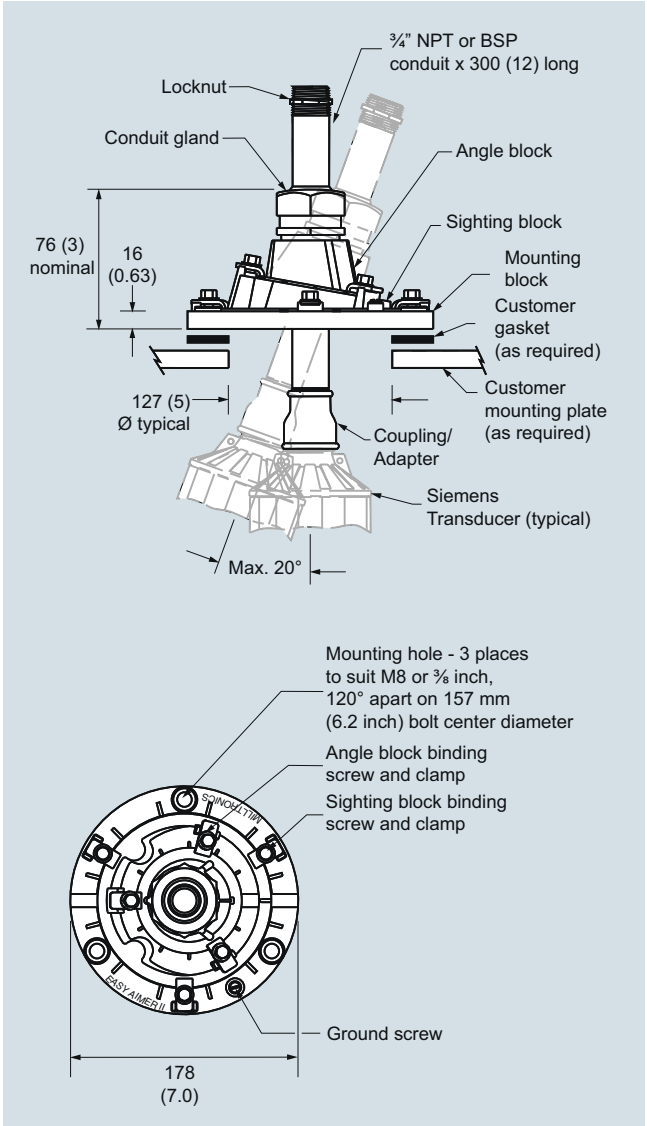


EA 2 aiming device, dimensions in mm (inch)

© Siemens AG 2017



## EA aiming devices

| Selection and Ordering data | Article No. |
|---|---|
| **Easy aimer**<br>Used on solids applications to aim transducers for optimal performance. Available in a 304 stainless steel model, or a cast aluminum model. | |
| Easy Aimer 2, aluminum with M20 adapter and 1" and 1½" BSPT aluminum couplings | **7ML1830-1AX** |
| Easy Aimer 304, with M20 adapter and 1" and 1½" BSPT 304 stainless steel couplings | **7ML1830-1GN** |
| Easy Aimer 2, aluminum, BSPT conduit | **7ML1830-1AL** |
| Easy Aimer 2, aluminum, NPT with 1½" galvanized coupling[1)] | **7ML1830-1AN** |
| Easy Aimer 2, aluminum, NPT with 1" galvanized coupling | **7ML1830-1AP** |
| Easy Aimer 2, aluminum, NPT with ¾" x 1" PVC coupling | **7ML1830-1AQ** |
| Easy Aimer 304, BSPT conduit | **7ML1830-1AS** |
| Easy Aimer 304, NPT with 1½" stainless steel coupling[1)] | **7ML1830-1AT** |
| Easy Aimer 304, NPT with 1" stainless steel coupling | **7ML1830-1AU** |
| ***Operating Instructions*** | |
| All literature is available to download for free, in a range of languages, at http://www.siemens.com/processinstrumentation/documentation | |

1) For use with XPS-30 transducers only

## Application

Siemens mounting brackets permit simple, fast installation of ultrasonic transducers. These rugged, high quality mounting brackets are constructed of 304 (1.4301) stainless steel and are suitable for use indoors and outdoors. They adjust to fit almost any application, saving you the time and expense of building custom brackets. Each kit includes all mounting parts.

***FMS-200***
***universal box bracket system***

Mounting of units with 1 inch or 2 inch threaded connection.

Distance from sensor to wall or beam: 20 ... 31 cm (8 ... 12 inch).

The unique box design also acts as a sun shield for transducers with 1 inch threaded connections.

***FMS-210***
***wall mounting set***

Mounting of transducers with 1 inch threaded connection.

Distance from transducer to wall or beam:
12 ... 48 cm (5 ... 19 inch).

***FMS-220***
***extended wall mounting set***

Mounting of transducers with 1 inch threaded connection.

Distance from transducer to wall or beam:
32 ... 98 cm (13 ... 39 inch).

***FMS-310***
***floor mounting set***

Mounting of transducers with 1 inch threaded connection.

Distance from transducer to floor: 20 ... 48 cm (8 ... 19 inch).

Distance from mounting support: 5 ... 57 cm (2 ... 22 inch).

***FMS-320***
***extended floor mounting set***

Mounting of transducers with 1 inch threaded connection.

Distance from transducer to floor: 20 ... 48 cm (8 ... 19 inch).

Distance from mounting support: 41 ... 108 cm (16 ... 43 inch).

***FMS-350***
***floor mounting set, bridge***

Mounting of transducers with 1 inch threaded connection.

Distance from transducer to floor: 20 ... 48 cm (8 ... 19 inch), anywhere along the complete width of the bridge [166 cm (65 inch)].

This kit is particularly suitable for measurements on open channels (OCM) by providing a very stable mount for the transducer above a flume or weir.

## Integration

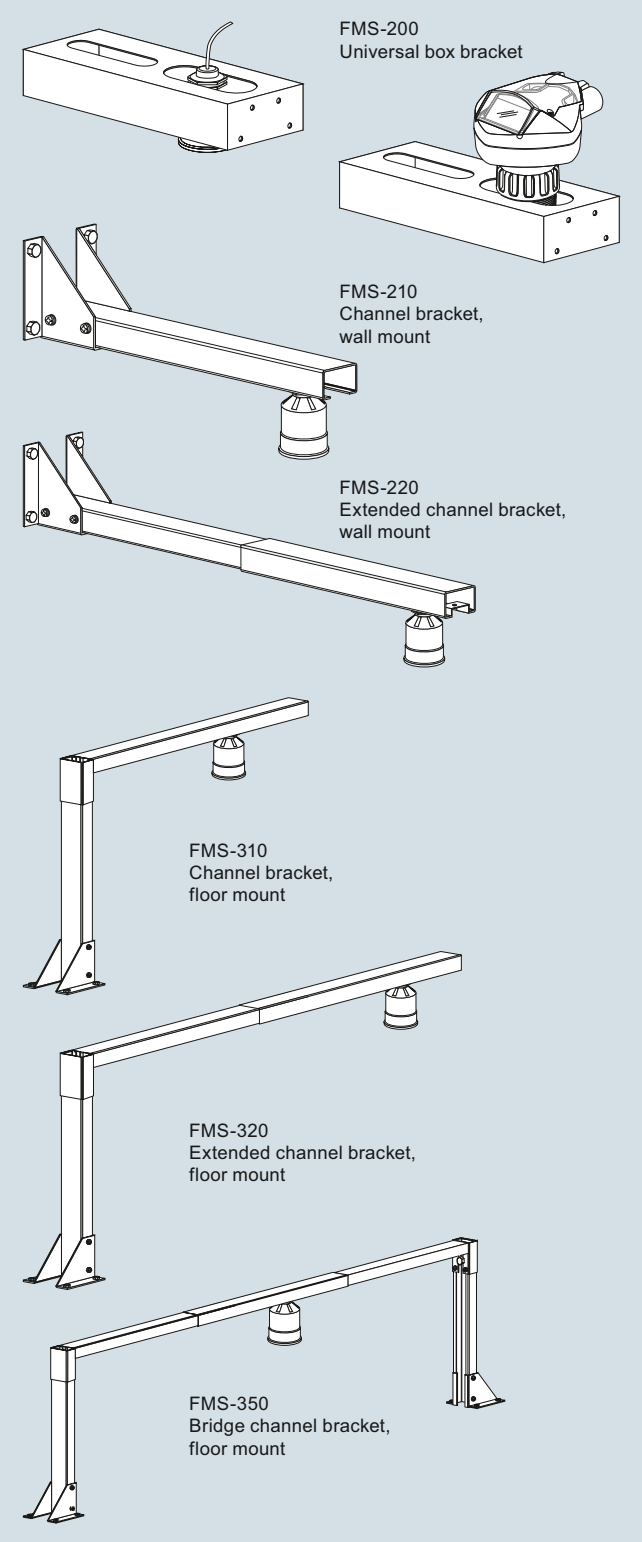


FMS mounting brackets

© Siemens AG 2017



## FMS mounting brackets

| Selection and Ordering data | Article No. |
|---|---|
| **Mounting brackets for XPS-10 sensors** | |
| FMS-200 universal box bracket set | **7ML1830-1BK** |
| FMS-210 wall mounting set | **7ML1830-1BL** |
| FMS-220 extended wall mounting set | **7ML1830-1BM** |
| FMS-310 floor mounting set | **7ML1830-1BN** |
| FMS-320 extended floor mounting set | **7ML1830-1BP** |
| FMS-350 floor mounting set, bridge | **7ML1830-1BQ** |
| ***Additional Operating Instructions*** | |
| FMS-200 | **7ML1998-5BK61** |
| FMS-210 | **7ML1998-5BL61** |
| FMS-220 | **7ML1998-5BM61** |
| FMS-310 | **7ML1998-5BN61** |
| FMS-320 | **7ML1998-5BP61** |
| FMS-350 | **7ML1998-5BQ61** |
| Note: The Operating Instructions should be ordered as a separate line item on the order. | |
| All literature is available to download for free, in a range of languages, at http://www.siemens.com/processinstrumentation/documentation | |

REVIEWED BY CONTRACTOR

Kudlik Construction Ltd.

NAME: Sandra Rousseau P.Eng

DATE: Jun 18, 2018

NORCLAIR
MÉCANIQUE DE PROCÉDÉ

# TDS AND SHOP DRAWINGS

**DA-IC-02-**Flowmeter (FQIT) - 200mm

**Date :** 2018-06-18

## INFORMATION

Project : **WASTEWATER PLANT - IQALUIT**

| | |
|---|---|
| Client : Kudlik Construction Ltd.<br>To Sandra Rousseau P.Eng./ Project Manager | Project number : **2018-062** |
| Contractor : Norclair inc. | Project number Norclair : **P1039** |
| Address : 1100, Montee Masson, Laval, QC, Canada H7E 4P2 | |
| Project Manager : Steven Wieland | E-mail: swieland@norclair.ca |
| Phone: 450-688-4012 # 708 | Cell.: 514-608-0619 |

## Information, subcontractor or supplier

Sub supplier : Endress + Hauser Canada Ltée

| | |
|---|---|
| Contact : Éric Carpentier | Phone : 514-733-0254 |

## Information on the equipment or the proposed materials

Speciality : Instruments and controls

Equipment :

Flowmeter (FQIT) - 200mm

Drawing reference :

| | |
|---|---|
| Specification reference : 40 05 23 | Division : |
| Article : | Number Page : 4 |

Tag number : FQIT-01-150

## CONSULTANT APPROVAL

STANTEC PROJECT #: 110126045

SUBMITTAL # DA-IC-02-Flowmeter (2018-06-18)

This review by Stantec is for general conformance with the design concept of Stantec's design of the:

☐ Architectural ☐ Structural ☐ Mechanical ☐ Electrical ☑ Other Instrumentation

component(s) only and does not mean that Stantec has verified or approves the shop drawing(s). The Contractor remains solely responsible for the shop drawing(s) and this review by Stantec does not relieve the Contractor of the Contractor's responsibility for errors or omissions in the shop drawing(s) or for meeting all requirements of the contract documents. This review does not mean that Stantec approves the detailed design inherent in the shop drawing, responsibility for which shall remain with the Contractor submitting same, nor does this review mean that Stantec accepts any deviation of the shop drawing(s) from the contract documents. The Contractor is responsible for confirming all dimensions and correlating them at the job site, for all construction means, methods and techniques, and for coordination of construction work of all trades, including coordination of all shop drawings.

Stantec

☑ REVIEWED

☐ REVIEWED, AS NOTED

☐ REVISE AND RESUBMIT

☐ NOT REVIEWED

DATE 2018-JUN-21

BY David Hutchison, P.Eng.

1100, Montée Masson
Laval, QC, Canada
H7E 4P2

Phone. : 450-688-4012
Fax : 450-661-6341
E-Mail : info@norclair.ca
www.norclair.ca

Endress+Hauser
People for Process Automation

| Drawing # | | Project | **IQALUIT** |
|---|---|---|---|
| | | Customer | **NORCLAIR** |

Instrument description

**5W4C2H-CKL7/0**
5W4C2H-C6ALHA0DUA1K0A+Z1
Promag W 400, 5W4C2H, DN200 8"

C6 Approval: CSA C/US NI Cl.I Div.2 Gr. ABCD
A Design: Insertion length short ISO/DVGW until DN400, DN450-2000 1:1
L Power Supply: 100-240VAC/24VAC/DC
H Output; Input: 4-20mA HART, pulse/freq.,switch output
A Housing: Compact, alu, coated
0 Cable, Remote Version: Not used
D Electrical Connection: Thread NPT1/2
U Liner: Polyurethane
A1K Process Connection: Cl.150, carbon steel, flange ASME B16.5
0 Electrodes: 1.4435/316L
A Calibration Flow: 0.5%

Adress: 1100 Montee Masson
Laval QC H7E 4P2

Contact: **Jean-François Lessard**

Telephone: **450-688-4012**
Fax
E-mail jflessard@norclair.ca

Manufacturer

Endress+hauser Canada Ltée
6800 Côte de liesse, suite 100
Ville Saint-Laurent, Québec, Canada
H4T 2A7

Telephone 514 733-0254**x2286**
Fax 514 733-2924
E-mail eric.carpentier@ca.endress.com

| Prepare by | **Eric Carpentier** |
|---|---|

| built as | | Drawing for | |
|---|---|---|---|
| As is | **X** | Approbation: | **X** |
| Equivalent: | | Information: | |
| Substitution: | | Coordination: | |

Tag number FQIT-01-150

| Revision | Initial | Date |
|---|---|---|
| **1** | **EC** | **15 juin, 2018** |
| | | |
| | | |
| | | |

Endress+Hauser
People for Process Automation

| Drawing # | | Project | **IQALUIT** |
|---|---|---|---|

MECHANICAL

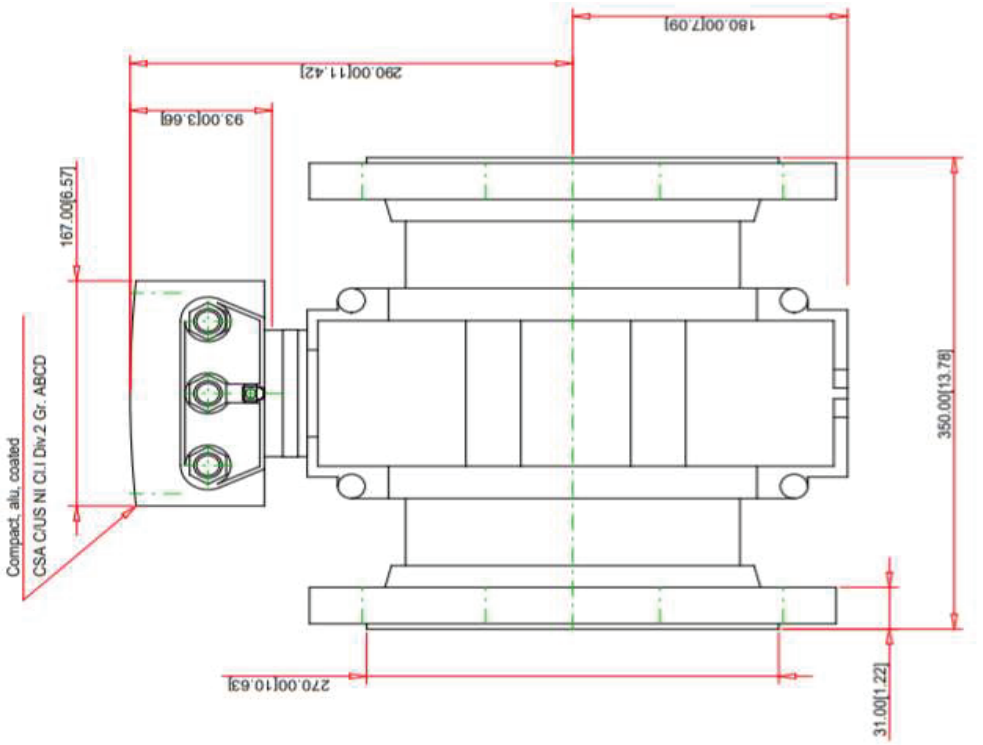


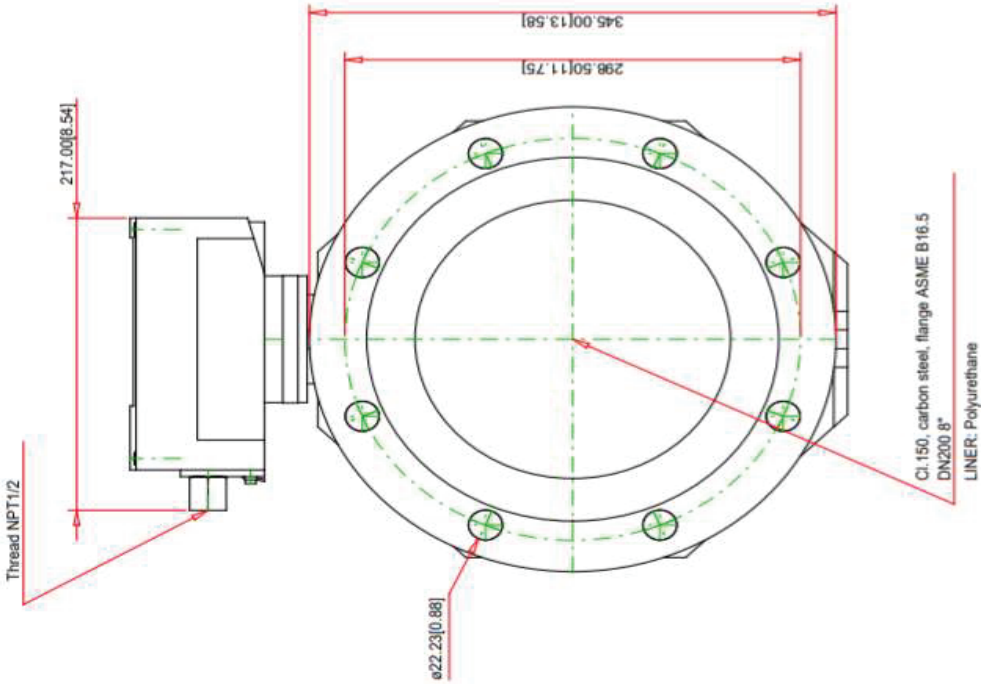

*Supply voltage*

| **Order code "Power supply"** | **Terminal numbers** | **terminal voltage** | | **Frequency range** |
|---|---|---|---|---|
| Option **L** (wide range power unit) | 1 (L+/L), 2 (L-/N) | DC 24 V | ±25% | – |
| | | AC 24 V | ±25% | 50/60 Hz, ±4 Hz |
| | | AC 100 to 240 V | −15 to +10% | 50/60 Hz, ±4 Hz |

*Signal transmission 0-20 mA/4-20 mA HART and additional outputs and inputs*

| **Order code for "Output" and "Input"** | **Terminal numbers** | | | | | | | |
|---|---|---|---|---|---|---|---|---|
| | **Output 1** | | **Output 2** | | **Output 3** | | **Input** | |
| | **26 (+)** | **27 (-)** | **24 (+)** | **25 (-)** | **22 (+)** | **23 (-)** | **20 (+)** | **21 (-)** |
| Option **H** | ▪ 4-20 mA HART (active)<br>▪ 0-20 mA (active) | | Pulse/frequency output (passive) | | Switch output (passive) | | - | |

REVIEWED BY CONTRACTOR

Kudlik Construction Ltd.

NAME: Sandra Rousseau P.Eng

DATE: Jun 26, 2018

NORCLAIR
MÉCANIQUE DE PROCÉDÉ

# TDS AND SHOP DRAWINGS

**DA-IC-03-**CPL900 panel modif POWER SUPPLY **Date :** 2018-06-22

## INFORMATION

| | |
|---|---|
| Project : **WASTEWATER PLANT - IQALUIT** | |
| Client : Kudlik Construction Ltd.<br>To Sandra Rousseau P.Eng./ Project Manager | Project number : **2018-062** |
| Contractor : Norclair inc. | Project number Norclair : **P1039** |
| Address : 1100, Montee Masson, Laval, QC, Canada H7E 4P2 | |
| Project Manager : Steven Wieland | E-mail: swieland@norclair.ca |
| Phone: 450-688-4012 # 708 | Cell.: 514-608-0619 |

## Information, subcontractor or supplier

| | |
|---|---|
| Sub supplier : Entreprise LM | |
| Contact : | Phone : 514-523-2831 |

## Information on the equipment or the proposed materials

| | |
|---|---|
| Speciality : Instruments and controls | |
| Equipment :<br>CPL-900 control panel package | |
| Drawing reference : | |
| Specification reference : 40 05 23 | Division : |
| Article : | Number Page : 4 |
| POWER SUPPLY in stocl (vs 25 days delays) | |

## CONSULTANT APPROVAL

The proposed power supply alternate is acceptable.

STANTEC PROJECT #: 110126045

SUBMITTAL # DA-IC-03R1 (2018-06-22)

This review by Stantec is for general conformance with the design concept of Stantec's design of the:

☐ Architectural ☐ Structural ☐ Mechanical ☐ Electrical ☑ Other Instrumentation

component(s) only and does not mean that Stantec has verified or approves the shop drawing(s). The Contractor remains solely responsible for the shop drawing(s) and this review by Stantec does not relieve the Contractor of the Contractor's responsibility for errors or omissions in the shop drawing(s) or for meeting all requirements of the contract documents. This review does not mean that Stantec approves the detailed design inherent in the shop drawing, responsibility for which shall remain with the Contractor submitting same, nor does this review mean that Stantec accepts any deviation of the shop drawing(s) from the contract documents. The Contractor is responsible for confirming all dimensions and correlating them at the job site, for all construction means, methods and techniques, and for coordination of construction work of all trades, including coordination of all shop drawings.

Stantec

☑ REVIEWED

☐ REVIEWED, AS NOTED

☐ REVISE AND RESUBMIT

☐ NOT REVIEWED

DATE 2018-06-26

BY David Hutchison, P.Eng.

1100, Montée Masson
Laval, QC, Canada
H7E 4P2

Phone. : 450-688-4012
Fax : 450-661-6341
E-Mail : info@norclair.ca
www.norclair.ca

Date : 2018-06-18
Project No : 110126045

# IQALUIT WASTEWATER TREATMENT PLANT UPGRADE CPL 900

Entreprises L.M.

| CPL-900 | | | EQUIVALENT | | | |
|---|---|---|---|---|---|---|
| **Manufacturier** | **Part Number** | **Description** | **Manufacturier** | **Part Number** | **Description** | **Data Sheet** |
| N-TRON | 116TX | 16 PORT ETHERNET SWITCH, C/W DIN MOUNT C | WEIDMULLER | 1241000000 | IE-SW-VL16-16TX | http://catalog.weidmueller.com/catalog/Start.do?localeId=en_C |
| | | | | | | |
| OMRON | G2R1SNDC24S | RELAY WITH LED INDICATOR | SCHNEIDER | RXG13BD | 1CO 10A RELAY-LTBLED 24VDC | https://www.schneider-electric.us/en/product/RXG13BD/interfa |
| OMRON | P2RF-05-E | RELAY SOCKET | SCHNEIDER | RGZE1S35M | 1CO SEPARATE TERMINAL SOCKET WITH CL | https://www.schneider-electric.us/en/product/RGZE1S35M/soc |
| | | | | | | |
| HOFFMAN | A56P44F1 | FULL SIZE MOUNTING PANEL | EXM | 885 SP6048 | PLAQUE DE FOND POUR 5500 DDS6048 | http://www.exmweb.com/index.php?option=com_content&vie |
| HOFFMAN | ALFSWD | DOOR SWITCH | EXM | 889 FLRDS | REMOTE DOOR SWITCH - SERIES FLRDS | 889 flrds.pdf (PDF) |
| HOFFMAN | F8T5 | FLUORESCENT LIGHT BULB | EXM | 880 LED18 | NEON LIGHTS 18" | 880 led18.pdf (PDF) |
| HOFFMAN | LF120V18 | 120 VAC FLUORESCENT LIGHT KIT | | | | |
| | | | | | | |
| ALLEN BRADLEY | 1492-SPM1B030 | 30A SINGLE POLE CIRCUIT BREAKER | SCHNEIDER | MG17407 | PROTECTEUR SUPPLEMENTAIRE 30A 1P | https://www.schneider-electric.us/en/product/MG17407/multi |
| ALLEN BRADLEY | 1606-XLS480E | 24VDC POWER SUPPLY 20A | WEIDMULLER | 1469510000 | PRO ECO 480W 24V 20A | http://catalog.weidmueller.com/catalog/Start.do?localeId=hk_C |
| ALLEN BRADLEY | 1492-SP1B150 | 15A SINGLE POLE CIRCUIT BREAKER | SCHNEIDER | G17406 | DISJONCTEUR A BOITIER MOULE 15A | https://www.schneider-electric.us/en/product/MG17406/multi |
| ALLEN BRADLEY | 1492-SP1B100 | 10A SINGLE POLE CIRCUIT BREAKER | SCHNEIDER | MG24116 | COURBURE B C60N 1 POLE 10 A | https://www.schneider-electric.us/en/product/MG24116/multi |
| ALLEN BRADLEY | 1756PA75/B | PLC POWER SUPPLY | ALLEN BRADLEY | 1756PA72 | PLC POWER SUPPLY | 1756-td005_-en-e |
| | | | | | | |
| PHOENIX CONTACT | UTB 2,5 - 3044636 | 2-TIER FEED THROUGH TERMINAL BLOCK | WEIDMULLER | 1041100000 | WDK 2.5 ZQV PLUGGABLE JUMPER | http://catalog.weidmueller.com/catalog/Start.do?localeId=en_C |
| PHOENIX CONTACT | UTTB 2,5 - 3044636 | END COVERS FOR ITEM 24 | WEIDMULLER | 1059100000 | AP FOR WDK 2.5,WM,BG | http://catalog.weidmueller.com/catalog/Start.do?localeId=en_C |
| PHOENIX CONTACT | ST 2,5-PE/L/L-3036097 | 2-TIER FEED SPRING CAGE TERMINAL BLOCK (2 T | WEIDMULLER | 1131750000 | ZDLD 2.5-2N/PE/L/L | http://catalog.weidmueller.com/catalog/Start.do?localeId=en_C |
| PHOENIX CONTACT | D-ST 2,5-3L-3L-3036660 | END COVERS FOR ITEM 26 | WEIDMULLER | 1782340000 | ZAP/TW ZDLD 2.5-2N | http://catalog.weidmueller.com/catalog/Start.do?localeId=en_C |
| PHOENIX CONTACT | UT 4-L/HESI-3214325 | FUSED MODULAR TERMINAL BLOCK WITH FEED | WEIDMULLER | 1833600000 | WDK 2.5/TR-DU/O TNHE | http://catalog.weidmueller.com/catalog/Start.do?localeId=en_C |
| | | | WEIDMULLER | 7921570000 | SIHA3/G20,LED,10-36VAC/DC | http://catalog.weidmueller.com/catalog/Start.do?localeId=en&C |
| | | | WEIDMULLER | 1839850000 | WAP WDK 2.5N/TR-DU | http://catalog.weidmueller.com/catalog/Start.do?localeId=en_C |
| PHOENIX CONTACT | FBS 10-6 - 3030365 | PLUG IN BRIDGE | WEIDMULLER | 1693880000 | ZQV 2.5N/10 GE (YELLOW) | http://catalog.weidmueller.com/catalog/Start.do?localeId=en_C |
| | | | WEIDMULLER | 1608940000 | ZQV 2.5/10 | http://catalog.weidmueller.com/catalog/Start.do?localeId=en_C |
| | | | WEIDMULLER | 1054460000 | WQV 2.5/10 FOR WDU 2.5,10 PO | http://catalog.weidmueller.com/procat/Product.jsp;jsessionid=E |
| PHOENIX CONTACT | FBS 20-6 - 3030365 | PLUG IN BRIDGE | WEIDMULLER | 1909000000 | ZQV 2.5N/20 YELLOW | http://catalog.weidmueller.com/catalog/Start.do?localeId=en_C |
| | | | WEIDMULLER | 1908960000 | ZQV 2.5/20 YL | http://catalog.weidmueller.com/procat/Product.jsp;jsessionid=E |
| | | | WEIDMULLER | 1577570000 | WQV 2.5/20 FOR WDU 2.5,20 PO | http://catalog.weidmueller.com/procat/Product.jsp;jsessionid=E |
| PHOENIX CONTACT | UM8-0830943 | TERMINAL BLOCK MARKERS | WEIDMULLER | 1609801044 | DEK 5/5 MC-10 NEUT. WS (WHITE) | http://catalog.weidmueller.com/catalog/Start.do?localeId=en_C |
| | | | | | | |
| T&B | ADR21 | GROUND LUG #2/0 | BURNDY | K2A26U | RACCORD ALUM/CUI 14-2/0AWG 1/4 | https://ecat.burndy.com/Comergent/en/US/adirect/burndy?cm |
| | | | | | | |
| PANDUIT | G3X4LG6 | WIRE DUCT 3"X4 | LEGRAND | 636118 | TRANSCAB CABLE DUCTING BASE+COVER W | https://www.legrand.com/ecat_export/636118-cable-ducting-b |
| PANDUIT | C3LG6 | 3" WIRE DUCT COVER | LEGRAND | 636118 | TRANSCAB CABLE DUCTING BASE+COVER W | https://www.legrand.com/ecat_export/636118-cable-ducting-b |
| | | | | | | |

Allen-Bradley

# 1756 ControlLogix Power Supplies Specifications

| | |
|---|---|
| Standard Power Supplies Catalog Numbers | 1756-PA72, 1756-PA72K, 1756-PA75, 1756-PA75K, 1756-PB72, 1756-PB72K,1756-PB75, 1756-PB75K,1756-PC75, 1756-PH75 |
| Standard Slim Power Supplies Catalog Numbers | 1756-PA50, 1756-PA50K, 1756-PB50, 1756-PB50K |
| ControlLogix-XT Power Supplies Catalog Numbers | 1756-PAXT, 1756-PBXT |
| ControlLogix-XT Slim Power Supplies Catalog Numbers | 1756-PA30XT, 1756-PB30XT |
| Redundant Power Supplies Catalog Numbers | 1756-PA75R, 1756-PA75RK,1756-PB75R, 1756-PB75RK |
| Redundant Power Supplies Chassis Adapter Catalog Number | 1756-PSCA2, 1756-PSCA2K |
| ControlLogix-XT Redundant Power Supplies Catalog Numbers | 1756-PAXTR, 1756-PBXTR |
| ControlLogix-XT Redundant Power Supplies Chassis Adapter Catalog Number | 1756-PSCA2XT |
| Redundant Power Supply Power Cable Catalog Numbers | 1756-CPR2, 1756-CPR2D, 1756-CPR2U |


| Topic | Page |
|---|---|
| Standard AC Power Supplies | 2 |
| Standard DC Power Supplies | 4 |
| 1756 ControlLogix-XT Power Supplies | 8 |
| Redundant Power Supplies | 11 |
| Power Load and Transformer Sizing | 19 |
| Additional Resources | 21 |


ControlLogix® power supplies are used with the 1756 chassis to provide 1.2V, 3.3V, 5V, and 24V DC power directly to the chassis backplane. Standard, Slim, ControlLogix-XT™, and redundant power supplies are available.

## Summary of Changes

This manual contains new and updated information as indicated in this table.

| Topic | Page |
|---|---|
| Added these power supplies: 1756-PA50K, 1756-PB50K, 1756-PA72K, 1756-PA75K, 1756-PB72K, 1756-PB75K, 1756-PA75RK, 1756-PB75RK, and 1756-PSCA2K | Throughout |

# Standard AC Power Supplies

## Mounting Dimensions

**1756-PA72, 1756-PA72K, 1756-PA75, 1756-PA72K**

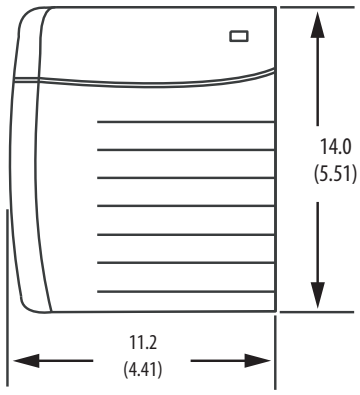


**1756-PA50, 1756-PA50K**

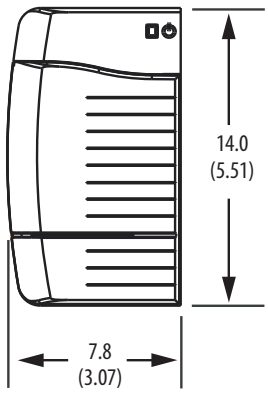


Dimensions are in cm (in.).

### Technical Specifications - Standard AC Power Supplies

| Attribute | 1756-PA50, 1756-PA50K | 1756-PA72/C, 1756-PA72K/C | 1756-PA75/B, 1756-PA75K/B |
|---|---|---|---|
| Input voltage range[1] | 85…265V AC | | |
| Input voltage, nom | 120V/240V AC | | |
| Input frequency range | 47…63 Hz | | |
| Input power, max | 81 W/91VA @ 50 °C (122 °F)<br>68 W/77VA @ 60 °C (140 °F) | 100VA/100 W | |
| Output power, max | 60 W @ 0…+50 °C (+32…+122 °F)[3]<br>50 W @ 0…+60 °C (+32…+140 °F)[4] | 75 W @ 0…+60 °C (+32…+140 °F)[6] | |
| Inrush current, max | 20 A | | |
| Hold up time[2] | 4 cycles @85...265V AC, 50/60 Hz, 60 W<br>5 cycles @85...265V AC, 50/60 Hz, 50 W | 5 cycles @ 85V AC, 50/60 Hz<br>6 cycles @ 120V AC, 50/60 Hz<br>6 cycles @ 200V AC, 50/60 Hz<br>6 cycles @ 240V AC, 50/60 Hz | 2 cycles @ 85V AC, 60 Hz<br>6 cycles @ 120V AC, 60 Hz<br>20 cycles @ 220V AC, 60 Hz |
| Current capacity @ 1.2V DC | 1.5 A | | |
| Current capacity @ 3.3V DC | 2 A | 4 A | |
| Current capacity @ 5.1V DC | 8 A @ 50 °C (122 °F)<br>6 A @ 60 °C (140 °F) | 10 A | 13 A |
| Current capacity @ 24V DC | 2.5 A @ 50 °C (122 °F)<br>2.0 A @ 60 °C (140 °F) | 2.8 A | |
| Isolation voltage | 250V (continuous), Reinforced Insulation Type, Power Input to Backplane<br>Type tested @ 3150V DC for 60 s | 250V (continuous), Reinforced Insulation Type, Power Input to Backplane<br>Type tested at 3500V DC for 60 s | |
| Weight, approx | 0.77 kg (1.7 lb) | 0.95 kg (2.10 lb) | |
| Dimensions (HxWxD), approx | 14.0 x 7.8 x 14.5 cm<br>(5.51 x 3.07 x 5.71 in.) | 14.0 x 11.2 x 14.5 cm (5.51 x 4.41 x 5.71 in.) | |
| Module location | Left side of 1756 chassis | | |
| Chassis | 1756-A4, 1756-A7, 1756-A10, 1756-A13, 1756-A17 | | |
| Chassis compatibility | Series A<br>Series B<br>Series C | | Series B<br>Series C |
| Wire size | 2.5 $mm^2$ (14 AWG) solid or stranded copper wire rated at 90 °C (194 °F), or greater, 1.2 mm (3/64 in.) insulation max | | |

## Technical Specifications - Standard AC Power Supplies

| Attribute | 1756-PA50, 1756-PA50K | 1756-PA72/C, 1756-PA72K/C | 1756-PA75/B, 1756-PA75K/B |
|---|---|---|---|
| Wire category | 1 - on power ports[5] | | |
| Conductor screw torque | 0.8 N•m (7 lb•in) | | |
| North American temperature code | T4 | | |
| Enclosure type rating | None (open-style) | | |

(1) UL certification for 120/240V AC, 50/60 Hz nominal. Rockwell Automation specified 85…265V AC, 47…63 Hz.
(2) The hold up time is the time between input voltage removal and DC power failure.
(3) The combination of all output power (5.1V backplane, 24V backplane, 3.3V backplane, and 1.2V backplane) cannot exceed 60 W @ 50 °C (122 °F) maximum temperature.
(4) The combination of all output power (5.1V backplane, 24V backplane, 3.3V backplane, and 1.2V backplane) cannot exceed 50 W @ 60 °C (140 °F) maximum temperature.
(5) Use this conductor category information to plan conductor routing as described in the system level installation manual. See the Industrial Automation Wiring and Grounding Guidelines, publication 1770-4.1.
(6) The combination of all output power (5.1V backplane, 24V backplane, 3.3V backplane, and 1.2V backplane) cannot exceed 75 W.

## Environmental Specifications - Standard AC Power Supplies

| Attribute | 1756-PA50, 1756-PA50K | 1756-PA72/C, 1756-PA72K/C, 1756-PA75/B, 1756-PA75K/B |
|---|---|---|
| Temperature, operating<br>IEC 60068-2-1 (Test Ad, Operating Cold),<br>IEC 60068-2-2 (Test Bd, Operating Dry Heat),<br>IEC 60068-2-14 (Test Nb, Operating Thermal Shock) | 0 °C < Ta < +60 °C (+32 °F < Ta < +140 °F) | |
| Temperature, surrounding air, max | 60 °C (140 °F) | |
| Temperature, non-operating<br>IEC 60068-2-1 (Test Ab, Unpackaged Nonoperating Cold),<br>IEC 60068-2-2 (Test Bb, Unpackaged Nonoperating Dry Heat),<br>IEC 60068-2-14 (Test Na, Unpackaged Nonoperating Thermal Shock) | -40…+85 °C (-40…+185 °F) | |
| Relative humidity<br>IEC 60068-2-30 (Test Db, Unpackaged Damp Heat) | 5…95% noncondensing | |
| Vibration<br>IEC 60068-2-6 (Test Fc, Operating) | 2 g @ 10…500 Hz | |
| Shock, operating<br>IEC 60068-2-27 (Test Ea, Unpackaged Shock) | 30 g | |
| Shock, nonoperating<br>IEC 60068-2-27 (Test Ea, Unpackaged Shock) | 50 g[1] | |
| Emissions | IEC 61000-6-4 | |
| ESD immunity<br>IEC 61000-4-2 | 6 kV contact discharges<br>8 kV air discharges | |
| Radiated RF immunity<br>IEC 61000-4-3 | 10V/m with 1 kHz sine-wave 80% AM from 80…2000 MHz<br>10V/m with 200 Hz 50% Pulse 100% AM @ 900 MHz<br>10V/m with 200 Hz 50% Pulse 100% AM @ 1890 MHz<br>3V/m with 1 kHz sine-wave 80% AM from 2000…2700 MHz | |
| EFT/B immunity<br>IEC 61000-4-4 | ±4 kV at 5 kHz on power ports | |
| Surge transient immunity<br>IEC 61000-4-5 | ±1 kV line-line (DM) and ±2 kV line-earth (CM) on power ports | |
| Conducted RF immunity<br>IEC 61000-4-6 | 10V rms with 1 kHz sine-wave 80% AM from 150 kHz…80 MHz | |
| Voltage variation<br>IEC 61000-4-11 | 30% dips for 1 period at 0° and 180° on AC supply ports<br>60% dips for 5 and 50 periods on AC supply ports<br>±10% fluctuations for 15 min on AC supply ports<br>>95% interruptions for 250 periods on AC supply ports | |
| Damped oscillatory wave immunity<br>IEC 61000-4-18 | ±2.5 kV line-line (DM) and ±2.5 kV line-earth (CM) on power ports | – |

(1) Series C chassis have a maximum nonoperating shock value of 30 g. If you select a Series C chassis for use with your power supply, you are limited to a maximum nonoperating shock value of 30 g.

### Certifications - Standard AC Power Supplies

| Certification[1] | 1756-PA50, 1756-PA50K | 1756-PA72/C, 1756-PA72K/C | 1756-PA75/B, 1756-PA75K/B |
|---|---|---|---|
| UL | – | UL Listed Industrial Control Equipment. See UL File E65584. | |
| c-UL-us | UL Listed Industrial Control Equipment, certified for US and Canada. See UL File E65584.<br>UL Listed for Class I, Division 2 Group A,B,C,D Hazardous Locations, certified for U.S. and Canada. See UL File E194810. | – | |
| CSA | – | CSA Certified Process Control Equipment. See CSA File LR54689C.<br>CSA Certified Process Control Equipment for Class I, Division 2 Group A,B,C,D Hazardous Locations. See CSA File LR69960C. | |
| FM | FM Approved Equipment for use in Class I Division 2 Group A,B,C,D Hazardous Locations | | |
| CE | European Union 2014/30/EU EMC Directive, compliant with:<br>• EN 61326-1; Meas./Control/Lab., Industrial Requirements<br>• EN 61000-6-2; Industrial Immunity<br>• EN 61000-6-4; Industrial Emissions<br>• EN 61131-2; Programmable Controllers (Clause 8, Zone A & B)<br>European Union 2014/35/EU LVD, compliant with:<br>• EN 61010-2-201; Control Equipment Safety Requirements | European Union 2014/30/EU EMC Directive, compliant with:<br>• EN 61326-1; Meas./Control/Lab., Industrial Requirements<br>• EN 61000-6-2; Industrial Immunity<br>• EN 61000-6-4; Industrial Emissions<br>• EN 61131-2; Programmable Controllers (Clause 8, Zone A & B)<br>European Union 2014/35/EU LVD, compliant with:<br>• EN 61131-2; Programmable Controllers (Clause 11) | |
| RCM | Australian Radiocommunications Act, compliant with:<br>• EN 61000-6-4; Industrial Emissions | | |
| KC | Korean Registration of Broadcasting and Communications Equipment, compliant with:<br>• Article 58-2 of Radio Waves Act, Clause 3 | | |
| EAC | Russian Customs Union TR CU 020/2011 EMC Technical Regulation<br>Russian Customs Union TR CU 004/2011 LV Technical Regulation | | |

(1) See the Product Certification link at http://www.ab.com for Declarations of Conformity, Certificates, and other certification details.

## Standard DC Power Supplies

### Mounting Dimensions

**1756-PB72, 1756-PB72K, 1756-PB75, 1756-PB75K, 1756-PC75, 1756-PH75**

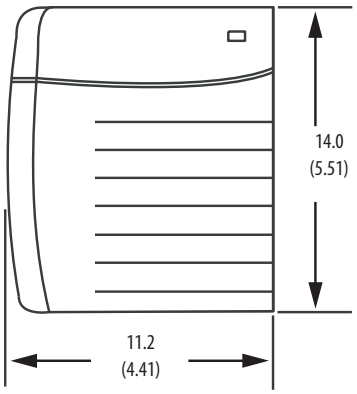


**1756-PB50, 1756-PB50K**

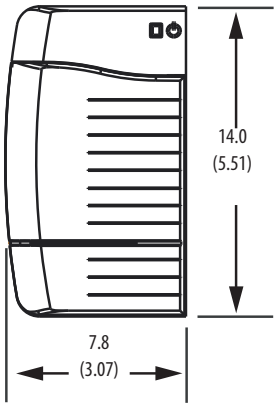


Dimensions are in cm (in.).

### Technical Specifications - Standard DC Power Supplies

| Attribute | 1756-PB50, 1756-PB50K | 1756-PB72/C, 1756-PB72K/C | 1756-PB75/B, 1756-PB75K/B | 1756-PC75/B | 1756-PH75/B |
|---|---|---|---|---|---|
| Input voltage range | 18…32V DC[2] | | | 30…60V DC[5] | 90…143V DC[6] |
| Input voltage, nom | 24V DC | | | 48V DC | 125V DC |
| Input power, max | 85 W @ 50 °C (122 °F)<br>70 W @ 60 °C (140 °F) | 95 W | | | |

## Technical Specifications - Standard DC Power Supplies

| Attribute | 1756-PB50, 1756-PB50K | 1756-PB72/C, 1756-PB72K/C | 1756-PB75/B, 1756-PB75K/B | 1756-PC75/B | 1756-PH75/B |
|---|---|---|---|---|---|
| Output power, max | 60 W @ 0…50 °C (32…122 °F)<br>50 W @ 0…60 °C (32…140 °F) | 75 W @ 0…60 °C (32…140 °F)[4] | | | |
| Inrush current, max | 30 A | | | | |
| Hold up time[1] | 30 ms @18...32V DC, 60 W<br>40 ms @18...32V DC, 50 W | 35 ms @ 18V DC<br>40 ms @ 24V DC<br>40 ms @ 32V DC | | 50 ms @ 30…60V DC nom | 50 ms @ 90…143V DC nom |
| Current capacity @ 1.2V | 1.5 A | | | | |
| Current capacity @ 3.3V | 2 A | 4 A | | | |
| Current capacity @ 5.1V | 8 A @ 50 °C (122 °F)<br>6 A @ 60 °C (140 °F) | 10 A | 13 A | | |
| Current capacity @ 24V | 2.5 A @ 50 °C (122 °F)<br>2.0 A @ 60 °C (140 °F) | 2.8 A | | | |
| Isolation voltage | 250V (continuous), Reinforced Insulation Type, Power Input to Backplane Type tested @ 3150V DC for 60 s | 250V (continuous), Reinforced Insulation Type, Power Input to Backplane Type tested @ 3500V DC for 60 s | | | |
| Weight, approx | 0.77 kg (1.7 lb) | 0.95 kg (2.10 lb) | | | |
| Dimensions (HxWxD), approx | 14.0 x 7.8 x 14.5 cm (5.51 x 3.07 x 5.71 in.) | 14.0 x 11.2 x 14.5 cm (5.51 x 4.41 x 5.71 in.) | | | |
| Module location | Left side of 1756 chassis | | | | |
| Chassis | 1756-A4, 1756-A7, 1756-A10, 1756-A13, 1756-A17 | | | | |
| Chassis compatibility | Series A<br>Series B<br>Series C | | Series B<br>Series C | | |
| Wire size | 2.5 $mm^2$ (14 AWG) solid or stranded copper wire rated at 90 °C (194 °F), or greater, 1.2 mm (3/64 in.) insulation max | | | | |
| Wire category | 1 - on power ports[3] | | | | |
| Conductor screw torque | 0.8 N•m (7 lb•in) | | | | |
| North American temperature code | T4 | | | | |
| ATEX temperature code | T4 | | | – | |
| IEC temperature code | T4 | | | – | |
| Enclosure type rating | None (open-style) | | | | |

(1) The hold up time is the time between input voltage removal and DC power failure.
(2) UL certification for 24V DC nominal. Rockwell Automation specified 18…32V DC.
(3) Use this conductor category information to plan conductor routing as described in the system level installation manual. See the Industrial Automation Wiring and Grounding Guidelines, publication 1770-4.1.
(4) The combination of all output power (5.1V backplane, 24V backplane, 3.3V backplane, and 1.2V backplane) cannot exceed 75 W.
(5) UL Certification for 48V DC nominal. Rockwell Automation specified 30…60V DC.
(6) UL certification for 125V DC nominal. Rockwell Automation specified 90…143V DC.

## Environmental Specifications - Standard DC Power Supplies

| Attribute | 1756-PB50, 1756-PB50K | 1756-PB72/C, 1756-PB72K/C<br>1756-PB75/B, 1756-PB75K/B | 1756-PC75/B, 1756-PH75/B |
|---|---|---|---|
| Temperature, operating<br>IEC 60068-2-1 (Test Ad, Operating Cold),<br>IEC 60068-2-2 (Test Bd, Operating Dry Heat),<br>IEC 60068-2-14 (Test Nb, Operating Thermal Shock) | 0 °C < Ta < +60 °C (+32 °F < Ta < +140 °F) | | |
| Temperature, surrounding air, max | 60 °C (140 °F) | | |
| Temperature, nonoperating<br>IEC 60068-2-1 (Test Ab, Unpackaged Nonoperating Cold),<br>IEC 60068-2-2 (Test Bb, Unpackaged Nonoperating Dry Heat),<br>IEC 60068-2-14 (Test Na, Unpackaged Nonoperating Thermal Shock) | -40…+85 °C (-40…+185 °F) | | |
| Relative humidity<br>IEC 60068-2-30<br>(Test Db, Unpackaged Damp Heat) | 5…95% noncondensing | | |
| Vibration<br>IEC 60068-2-6 (Test Fc, Operating) | 2 g @ 10…500 Hz | | |
| Shock, operating<br>IEC 60068-2-27 (Test Ea, Unpackaged Shock) | 30 g | | |
| Shock, nonoperating<br>IEC 60068-2-27 (Test Ea, Unpackaged Shock) | 50 g(1) | | |
| Emissions | IEC 61000-6-4 | | |
| ESD immunity<br>IEC 61000-4-2 | 6 kV contact discharges<br>8 kV air discharges | | |
| Radiated RF immunity<br>IEC 61000-4-3 | 10V/m with 1 kHz sine-wave 80% AM from 80…2000 MHz<br>10V/m with 200 Hz 50% Pulse 100% AM @ 900 MHz<br>10V/m with 200 Hz 50% Pulse 100% AM @ 1890 MHz<br>3V/m with 1 kHz sine-wave 80% AM from 2000…2700 MHz | | |
| EFT/B immunity<br>IEC 61000-4-4 | ±4 kV at 5 kHz on power ports | | |
| Surge transient immunity<br>IEC 61000-4-5 | ±1 kV line-line (DM) and ±2 kV line-earth (CM) on power ports | | |
| Conducted RF immunity<br>IEC 61000-4-6 | 10V rms with 1 kHz sine-wave 80% AM from 150 kHz…80 MHz | | |
| Voltage variation<br>IEC 61000-4-29 | 10 ms interruption on DC supply ports(2)<br>60% dips for 100 ms on DC supply ports<br>100% dips for 50 ms on DC supply ports<br>±20% fluctuations for 15 min on DC supply ports<br>5 s interruptions on DC supply ports(3) | | |

(1) Series C chassis have a maximum nonoperating shock value of 30 g. If you select a Series C chassis for use with your power supply, you are limited to a maximum nonoperating shock value of 30 g.
(2) Short interruption test verifies ride through. The supply remains fully functional under this condition.
(3) Long interruption test verifies that repetitive inrush surge currents do not create any unsafe conditions. The supply fully shuts down and starts up in this test.

## Certifications - Standard DC Power Supplies

| Certification[1] | 1756-PB50, 1756-PB50K | 1756-PB72/C, 1756-PB72K/C<br>1756-PB75/B, 1756-PB75K/B | 1756-PC75/B, 1756-PH75/B |
|---|---|---|---|
| UL | – | | UL Listed Industrial Control Equipment.<br>See UL File E65584. |
| c-UL-us | UL Listed Industrial Control Equipment, certified for US and Canada. See UL File E65584.<br>UL Listed for Class I, Division 2 Group A,B,C,D Hazardous Locations, certified for US and Canada. See UL File E194810. | | – |
| CSA | – | CSA Certified Process Control Equipment. See CSA File LR54689C.<br>CSA Certified Process Control Equipment for Class I, Division 2 Group A,B,C,D Hazardous Locations.<br>See CSA File LR69960C. | |
| FM | FM Approved Equipment for use in Class I Division 2 Group A,B,C,D Hazardous Locations | | – |
| CE | European Union 2014/30/EU EMC Directive, compliant with:<br>• EN 61326-1; Meas./Control/Lab., Industrial Requirements<br>• EN 61000-6-2; Industrial Immunity<br>• EN 61131-2; Programmable Controllers (Clause 8, Zone A & B)<br>• EN 61000-6-4; Industrial Emissions<br>European Union 2014/35/EU LVD, compliant with:<br>• EN 61010-2-201; Control Equipment Safety Requirements | European Union 2014/30/EU EMC Directive, compliant with:<br>• EN 61326-1; Meas./Control/Lab., Industrial Requirements<br>• EN 61000-6-2; Industrial Immunity<br>• EN 61000-6-4; Industrial Emissions<br>• EN 61131-2; Programmable Controllers (Clause 8, Zone A & B)<br>European Union 2014/35/EU LVD, compliant with:<br>• EN 61131-2; Programmable Controllers (Clause 11) | |
| RCM | Australian Radiocommunications Act, compliant with:<br>• EN 61000-6-4; Industrial Emissions | | |
| Ex | European Union 2014/34/EU ATEX Directive, compliant with:<br>• EN 60079-0; General Requirements<br>• EN 60079-15; Potentially Explosive Atmospheres, Protection "n"<br>• II 3 G Ex nA IIC T4 Gc<br>• DEMK013ATEX1325026X | | – |
| IECEx | IECEx System, compliant with:<br>• IEC 60079-0; General Requirements<br>• IEC 60079-15; Potentially Explosive Atmospheres, Protection "n"<br>• II 3 G Ex nA IIC T4 Gc<br>• IECEx UL 14.0008X | | – |
| KC | Korean Registration of Broadcasting and Communications Equipment, compliant with:<br>• Article 58-2 of Radio Waves Act, Clause 3 | | |
| EAC | Russian Customs Union TR CU 020/2011 EMC Technical Regulation<br>Russian Customs Union TR CU 004/2011 LV Technical Regulation | | |

(1) When marked. See the Product Certification link at http://www.ab.com for Declarations of Conformity, Certificates, and other certification details.

## 1756 ControlLogix-XT Power Supplies

The ControlLogix-XT products include control and communication system components that, when used with FLEX I/O-XT™ products, provide a complete control system solution that you can use in environments where temperatures range from -20...+70 °C (-4...+158 °F).

When used independently, the ControlLogix-XT system can withstand environments where the temperature ranges from -25...+70 °C (-13...+158 °F).

### Mounting Dimensions

**1756-PAXT and 1756-PBXT**

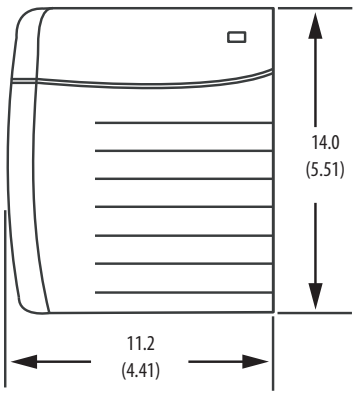


**1756-PA30XT and 1756-PB30XT**

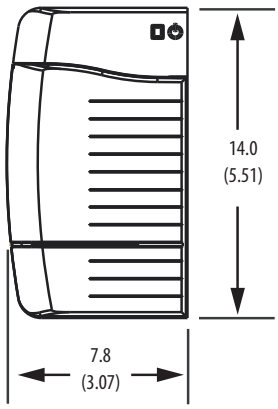


Dimensions are in cm (in.).

**Technical Specifications - ControlLogix-XT Power Supplies**

| Attribute | 1756-PAXT | 1756-PBXT | 1756-PA50XT | 1756-PA30XT | 1756-PB50XT | 1756-PB30XT |
|---|---|---|---|---|---|---|
| Input voltage range | 85…265V AC[1] | | | | 18…32V DC[5] | 18…32V DC[6] |
| Input voltage, nom | 120/240V AC | | | | 24V DC | |
| Input frequency range | 47…63 Hz | | | | 85 W @ 50 °C (122 °F)<br>70 W @ 60 °C (140 °F) | |
| Input power, max | 82VA 64 W | 70 W | 81 W/91VA @ 50 °C (122 °F)<br>68 W/77VA @ 60 °C (140 °F) | 60VA 50 W | 60 W @ 0…50 °C (32…122 °F)<br>50 W @ 0…60 °C (32…140 °F) | 50 W |
| Output power, max | 42 W @ -25…+70 °C (-13…+158 °F) | 52 W @ -25…+70 °C (-13…+158 °F) | 60 W @ 0…+50 °C (+32…+122 °F)[3]<br>50 W @ 0…+60 °C (+32…+140 °F)[4] | 30 W @ -25…+70 °C (-13…+158 °F) | 30 A | 30 W @ -25…+70 °C (-13…+158 °F) |
| Inrush current, max | 20 A | | | | 30 ms @18...32V DC, 60 W<br>40 ms @18...32V DC, 50 W | |
| Current capacity @ 1.2V | 1.5 A | | | | | |
| Current capacity @3.3V | 4 A | 4 A | 2 A | 2 A | 2 A | 2 A |
| Current capacity @ 5.1V | 8 A | 10 A | 8 A @ 50 °C (122 °F)<br>6 A @ 60 °C (140 °F) | 6 A | 8 A @ 50 °C (122 °F)<br>6 A @ 60 °C (140 °F) | 6 A |
| Current capacity @ 24V | 1.75 A | 2.1 A | 2.5 A @ 50 °C (122 °F)<br>2.0 A @ 60 °C (140 °F) | 1.25 A | 2.5 A @ 50 °C (122 °F)<br>2.0 A @ 60 °C (140 °F) | 1.25 A |

## Technical Specifications - ControlLogix-XT Power Supplies

| Attribute | 1756-PAXT | 1756-PBXT | 1756-PA50XT | 1756-PA30XT | 1756-PB50XT | 1756-PB30XT |
|---|---|---|---|---|---|---|
| Isolation voltage | 250V (continuous), Reinforced Insulation Type, Power Input to BackplaneT ype tested @ 3260V DC for 60 s | | 250V (continuous), Reinforced Insulation Type, Power Input to Backplane Type tested @ 3150V DC for 60 s | | 250V (continuous), Reinforced Insulation Type, Power Input to Backplane Type tested @ 3150V DC for 60 s | |
| Weight, approx | 0.95 kg (2.10 lb) | 0.95 kg (2.10 lb) | 0.77 kg (1.7 lb) | 0.77 kg (1.7 lb) | 0.77 kg (1.7 lb) | 0.77 kg (1.7 lb) |
| Dimensions (HxWxD), approx | 14.0 x 11.2 x 14.5 cm (5.51 x 4.41 x 5.71 in.) | 14.0 x 11.2 x 14.5 cm (5.51 x 4.41 x 5.71 in.) | 14.0 x 7.8 x 14.5 cm (5.51 x 3.07 x 5.71 in.) | 14.0 x 7.8 x 14.5 cm (5.51 x 3.07 x 5.71 in.) | 14.0 x 7.8 x 14.5 cm (5.51 x 3.07 x 5.71 in.) | 14.0 x 7.8 x 14.5 cm (5.51 x 3.07 x 5.71 in.) |
| Module location | Left side of 1756 chassis | | | | | |
| Chassis | 1756-A4LXT/B, 1756-A5XT/B, 1756-A7LXT/B, 1756-A7XT/B, 1756-A7XT/C, 1756-A10XT/C | | | | | |
| Wire size | 2.5 $mm^2$ (14 AWG) solid or stranded copper wire rated at 90 °C (194 °F), or greater, 1.2 mm (3/64 in.) insulation, max | | | | | |
| Wire category | 1 - on power ports(2) | | | | | |
| Conductor screw torque | 0.8 N•m (7 lb•in) | | | | | |
| North American temperature code | T4 | T4 | T4 | T4 | T4 | T4 |
| ATEX temperature code | – | | | | | |
| IEC temperature code | – | | | | | |
| Enclosure type rating | None (open-style) | | | | | |

(1) UL certification for 120/240V AC, 50/60 Hz nominal. Rockwell Automation specified 85…265V AC, 47…63 Hz.
(2) Use this conductor category information to plan conductor routing as described in the system level installation manual. See the Industrial Automation Wiring and Grounding Guidelines, publication 1770-4.1.
(3) The combination of all output power (5.1V backplane, 24V backplane, 3.3V backplane, and 1.2V backplane) cannot exceed 60 W @ 50 °C (122 °F) maximum temperature.
(4) The combination of all output power (5.1V backplane, 24V backplane, 3.3V backplane, and 1.2V backplane) cannot exceed 50 W @ 60 °C (140 °F) maximum temperature.
(5) UL certification for 24V DC nominal. Rockwell Automation specified 18…32V DC.
(6) UL certification for 24V DC nominal. Rockwell Automation specified 18…32V DC.

## Environmental Specifications - ControlLogix-XT Power Supplies

| Attribute | 1756-PAXT | 1756-PA30XT | 1756-PBXT | 1756-PB30XT |
|---|---|---|---|---|
| Temperature, operating<br>IEC 60068-2-1 (Test Ad, Operating Cold),<br>IEC 60068-2-2 (Test Bd, Operating Dry Heat),<br>IEC 60068-2-14 (Test Nb, Operating Thermal Shock) | -25 °C < Ta < +70 °C (-13 °F < Ta < +158 °F) | | | |
| Temperature, surrounding air, max | 70 °C 158 °F) | | | |
| Temperature, nonoperating<br>IEC 60068-2-1 (Test Ab, Unpackaged Nonoperating Cold),<br>IEC 60068-2-2 (Test Bb, Unpackaged Nonoperating Dry Heat),<br>IEC 60068-2-14 (Test Na, Unpackaged Nonoperating Thermal Shock) | -40…+85 °C (-40…+185 °F) | | | |
| Relative humidity<br>IEC 60068-2-30 (Test Db, Unpackaged Damp Heat) | 5…95% noncondensing | | | |
| Vibration<br>IEC 60068-2-6 (Test Fc, Operating) | 2 g @ 10…500 Hz | | | |
| Shock, operating<br>IEC 60068-2-27 (Test Ea, Unpackaged Shock) | 30 g | | | |
| Shock, nonoperating<br>IEC 60068-2-27 (Test Ea, Unpackaged Shock) | 50 g(1) | | | |
| Emissions | IEC 61000-6-4 | | | |
| ESD immunity<br>IEC 61000-4-2 | 6 kV contact discharges<br>8 kV air discharges | | | |

## Environmental Specifications - ControlLogix-XT Power Supplies

| Attribute | 1756-PAXT | 1756-PA30XT | 1756-PBXT | 1756-PB30XT |
|---|---|---|---|---|
| Radiated RF immunity<br>IEC 61000-4-3 | 10V/m with 1 kHz sine-wave 80% AM from 80…2000 MHz<br>10V/m with 200 Hz 50% Pulse 100% AM at 900 MHz<br>10V/m with 200 Hz 50% Pulse 100% AM at 1890 MHz<br>3V/m with 1 kHz sine-wave 80% AM from 2000…2700 MHz | | | |
| EFT/B immunity<br>IEC 61000-4-4 | ±4 kV at 5 kHz on power ports | | | |
| Surge transient immunity<br>IEC 61000-4-5 | ±1 kV line-line (DM) and ±2 kV line-earth (CM) on power ports | | | |
| Conducted RF immunity<br>IEC 61000-4-6 | 10V rms with 1 kHz sine-wave 80% AM from 150 kHz…80 MHz | | | |
| Voltage variation<br>IEC 61000-4-11 | 30% dips for 1 period at 0° and 180° on AC supply ports<br>60% dips for 5 and 50 periods on AC supply ports<br>±10% fluctuations for 15 min on AC supply ports<br>>95% interruptions for 250 periods on AC supply ports | | – | |
| Voltage variation<br>IEC 61000-4-29 | – | | 10 ms interruption on DC supply ports(2)<br>60% dips for 100 ms on DC supply ports<br>100% dips for 50 ms on DC supply ports<br>±20% fluctuations for 15 min on DC supply ports<br>5 s interruptions on DC supply ports(3) | |
| Damped oscillatory wave immunity<br>IEC 61000-4-18 | – | ±2.5 kV line-line (DM) and ±2.5 kV line-earth (CM) on power ports | – | ±2.5 kV line-line (DM) and ±2.5 kV line-earth (CM) on power ports |

(1) Series C chassis have a maximum nonoperating shock value of 30 g. If you select a Series C chassis for use with your power supply, you are limited to a maximum nonoperating shock value of 30 g.
(2) Short interruption test verifies ride through. The supply remains fully functional under this condition.
(3) Long interruption test verifies that repetitive inrush surge currents do not create any unsafe conditions. The supply fully shuts down and starts up in this test.

## Certifications - ControlLogix-XT Power Supplies

| Certification(1) | 1756-PAXT | 1756-PA30XT | 1756-PBXT | 1756-PB30XT |
|---|---|---|---|---|
| c-UL-us | UL Listed Industrial Control Equipment, certified for US and Canada. See UL File E65584.<br>UL Listed for Class I, Division 2 Group A,B,C,D Hazardous Locations, certified for US and Canada. See UL File E194810. | | | |
| CE | European Union 2014/30/EU EMC Directive, compliant with:<br>• EN 61326-1; Meas./Control/Lab., Industrial Requirements<br>• EN 61000-6-2; Industrial Immunity<br>• EN 61000-6-4; Industrial Emissions<br>• EN 61131-2; Programmable Controllers (Clause 8, Zone A & B)<br>European Union 2014/35/EU LVD, compliant with:<br>• EN 61131-2; Programmable Controllers (Clause 11) | European Union 2014/30/EU EMC Directive, compliant with:<br>• EN 61326-1; Meas./Control/Lab., Industrial Requirements<br>• EN 61000-6-2; Industrial Immunity<br>• EN 61000-6-4; Industrial Emissions<br>• EN 61131-2; Programmable Controllers (Clause 8, Zone A & B)<br>European Union 2014/35/EU LVD, compliant with:<br>• EN 61010-2-201; Control Equipment Safety Requirements | European Union 2014/30/EU EMC Directive, compliant with:<br>• EN 61326-1; Meas./Control/Lab., Industrial Requirements<br>• EN 61000-6-2; Industrial Immunity<br>• EN 61000-6-4; Industrial Emissions<br>• EN 61131-2; Programmable Controllers (Clause 8, Zone A & B)<br>European Union 2014/35/EU LVD, compliant with:<br>• EN 61131-2; Programmable Controllers (Clause 11) | European Union 2014/30/EU EMC Directive, compliant with:<br>• EN 61326-1; Meas./Control/Lab., Industrial Requirements<br>• EN 61000-6-2; Industrial Immunity<br>• EN 61000-6-4; Industrial Emissions<br>• EN 61131-2; Programmable Controllers (Clause 8, Zone A & B)<br>European Union 2014/35/EU LVD, compliant with:<br>• EN 61010-2-201; Control Equipment Safety Requirements |
| RCM | Australian Radiocommunications Act, compliant with:<br>EN 61000-6-4; Industrial Emissions | | | |
| Ex | – | | European Union 2014/34/EU ATEX Directive, compliant with:<br>• EN 60079-0; General Requirements<br>• EN 60079-15; Potentially Explosive Atmospheres, Protection "n"<br>• II 3 G Ex nA IIC T4 Gc X<br>• DEMKO13ATEX1325026X | |
| IECEx | – | | IECEx System, compliant with:<br>• IEC 60079-0; General Requirements<br>• IEC 60079-15; Potentially Explosive Atmospheres, Protection "n"<br>• II 3 G Ex nA IIC T4 Gc<br>• IECEx UL 14.0008X | |
| KC | Korean Registration of Broadcasting and Communications Equipment, compliant with:<br>• Article 58-2 of Radio Waves Act, Clause 3 | | | |
| EAC | Russian Customs Union TR CU 020/2011 EMC Technical Regulation<br>Russian Customs Union TR CU 004/2011 LV Technical Regulation | | | |

(1) When marked. See the Product Certification link at http://www.ab.com for Declarations of Conformity, Certificates, and other certification details.

## Redundant Power Supplies

To build a redundant power supply system, you need the following.

| Cat. No. | Description | Amount |
|---|---|---|
| 1756-PA75R/A, 1756-PA75RK/A, 1756-PAXTR, 1756-PB75R/A, 1756-PB75RK/A, or 1756-PBXTR | Redundant power supply | 2 |
| 1756-CPR2[1]<br>1756-CPR2D[2] or<br>1756-CPR2U[2] | Redundant power supply cable (Length = 0.91 m [3 ft]) | 2 |
| 1756-PSCA2, 1756-PSCA2K, or 1756-PSCA2XT | Redundant power supply chassis adapter[3] | 1 |
| User-supplied | Annunciator wiring[4] (Length, max = 10 m [32.8 ft]) | 2 |

(1) Cable bend radius is 12.7 cm (5.0 in.).
(2) Requires 10.16 cm (4.0 in.) of clearance next to the chassis adapter.
(3) The 1756-PSCA2 or 1756-PSCA-2XT chassis adapter is a passive device. The adapter funnels power from the redundant power supplies to the single power connector on the ControlLogix® series B chassis backplane.
(4) Optional user-provided annunciator wiring can be connected to the solid-state relay for status and troubleshooting.

### System Configuration Recommendations

We recommend that you use one of these methods to configure your redundant power supply system.

Recommended Configurations for a System That Uses One Chassis

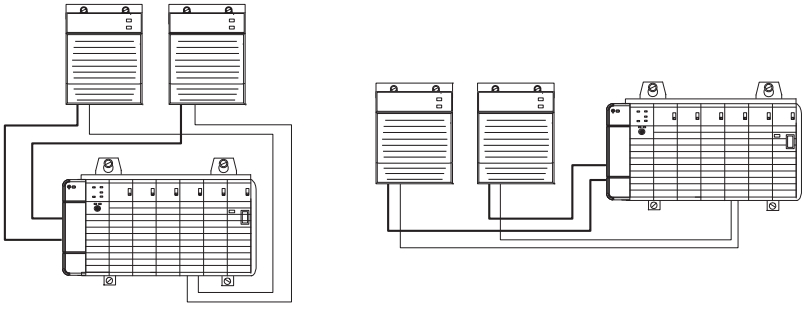

Recommended Configurations for a System That Uses Two Chassis

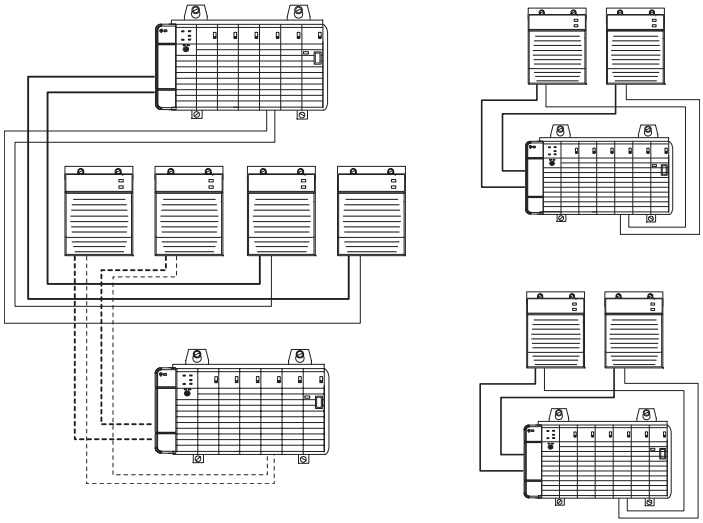

## Mounting Dimensions

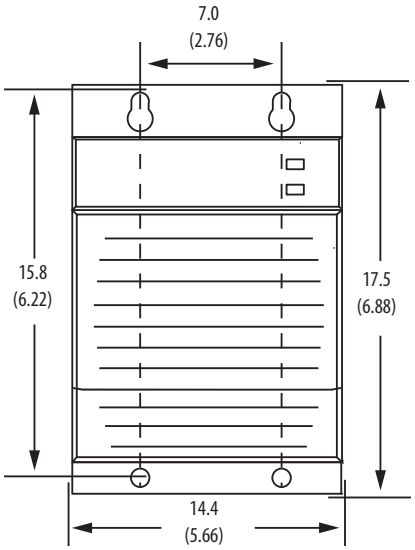


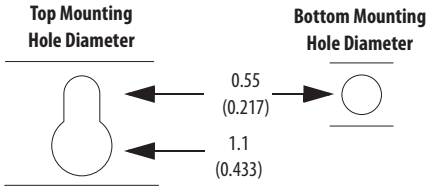


Dimensions are in cm (in.).

## Redundant Power Supply Features

The redundant power supplies offer the same features as the standard power supplies, and the following:

- Redundant operation
- Automatic chassis load sharing between the redundant power supplies
- Status indicators for visual operating status of the pair
- Solid-state relay for system recognition of supply status when wired to an input module
- The ControlLogix redundant power supply system is designed to account for operational anomalies in only the power supply (the chassis adapter and power supply cables are excluded)

**Technical Specifications - ControlLogix Redundant Power Supplies**

| Attribute | 1756-PA75R, 1756-PA75RK | 1756-PB75R, 1756-PB75RK |
|---|---|---|
| Input voltage range | 85…265V AC[1] | 18…32V DC[2] |
| Input voltage | 120V/240V AC, 50/60 Hz | 24V DC |
| Input frequency range | 47…63 Hz | – |
| Input power, max | 120VA 115 W | 110 W |
| Output power, max | 75 W @ 0…60 °C (32…140 °F) | |
| Inrush current, max | 20 A | 30 A |
| Hold up time[3] | 2 cycles @ 60 Hz<br>2 cycles @ 50 Hz | 20 ms |
| Current capacity @ 1.2V | 1.5 A | |
| Current capacity @ 3.3V | 4 A | |
| Current capacity @ 5.1V | 13 A | |
| Current capacity @ 24V | 2.8 A | |
| Annunciator power | 240V AC 50/60 Hz, 240V DC, 50 mA, resistive only | 90V DC for ATEX/IECEx |
| Isolation voltage | 250V (continuous), Reinforced Insulation Type, Power Input to Backplane, Power Input to Annunciator, Annunciator to Backplane<br>Type tested at 3250V DC for 60 s | |

## Technical Specifications - ControlLogix Redundant Power Supplies

| Attribute | 1756-PA75R, 1756-PA75RK | 1756-PB75R, 1756-PB75RK |
|---|---|---|
| Dimensions (HxWxD), approx | 17.5 x 14.5 x 13.7 cm (6.9 x 5.7 x 5.4 in.) | |
| Weight, approx | 1.45 kg (3.2 lb) | |
| Chassis | 1756-A4, 1756-A7, 1756-A10, 1756-A13, 1756-A17 | |
| Wire size | Power:<br>2.5 $mm^2$ (14 AWG) solid or stranded copper wire rated at 90 °C (194 °F), or greater, 1.2 mm (3/64 in.) insulation max<br><br>Annunciator:<br>0.25…2.5 $mm^2$ (22…14 AWG) solid or stranded copper wire rated at 90 °C (194 °F), or greater, 1.2 mm (3/64 in.) insulation max | |
| Wire category (4) | 3 - on annunciator ports<br>1 - on power ports<br>3 - on 1756-CPR2 connections | |
| Pilot duty rating | Annunciator - not rated | |
| Conductor screw torque | 0.79 N•m (7 lb•in) | |
| North American temperature code | T3C | T4 |
| ATEX temperature code | – | T4 |
| IEC temperature code | – | T4 |
| Enclosure type rating | None (open-style) | |

(1) UL certification for 120/240V AC, 50/60 Hz nominal. Rockwell Automation specified 85…265V AC, 47…63 Hz.
(2) UL certification for 24V DC nominal. Rockwell Automation specified 18…32V DC.
(3) The hold up time is the time between input voltage removal and DC power failure.
(4) Use this conductor category information to plan conductor routing. See the Industrial Automation Wiring and Grounding Guidelines, publication 1770-4.1.

## Environmental Specifications - Redundant Power Supplies

| Attribute | 1756-PA75R, 1756-PA75RK | 1756-PB75R, 1756-PB75RK |
|---|---|---|
| Temperature, operating<br>IEC 60068-2-1 (Test Ad, Operating Cold),<br>IEC 60068-2-2 (Test Bd, Operating Dry Heat),<br>IEC 60068-2-14 (Test Nb, Operating Thermal Shock) | 0…60 °C (32…140 °F) | |
| Temperature, surrounding air, max | 60 °C 140 °F) | |
| Temperature, nonoperating<br>IEC 60068-2-1 (Test Ab, Unpackaged Nonoperating Cold),<br>IEC 60068-2-2 (Test Bb, Unpackaged Nonoperating Dry Heat),<br>IEC 60068-2-14 (Test Na, Unpackaged Nonoperating Thermal Shock) | -40…+85 °C (-40…+185 °F) | |
| Relative humidity<br>IEC 60068-2-30 (Test Db, Unpackaged Damp Heat) | 5…95% noncondensing | |
| Vibration<br>IEC 60068-2-6 (Test Fc, Operating) | 2 g @ 10…500 Hz | |
| Shock, operating<br>IEC 60068-2-27 (Test Ea, Unpackaged Shock) | 30 g | |
| Shock, nonoperating<br>IEC 60068-2-27 (Test Ea, Unpackaged Shock) | 50 g | |
| Emissions | IEC 61000-6-4 | |
| ESD immunity<br>IEC 61000-4-2 | 6 kV contact discharges<br>8 kV air discharges | |
| Radiated RF immunity<br>IEC 61000-4-3 | 10V/m with 1 kHz sine-wave 80% AM from 80…2000 MHz<br>10V/m with 200 Hz 50% Pulse 100% AM @ 900 MHz<br>10V/m with 200 Hz 50% Pulse 100% AM at 1890 MHz<br>3V/m with 1 kHz sine-wave 80% AM from 2000…2700 MHz | |
| EFT/B immunity<br>IEC 61000-4-4 | ±4 kV at 5 kHz on power ports<br>±4 kV at 5 kHz on annunciator ports | |
| Surge transient immunity<br>IEC 61000-4-5 | ±1 kV line-line (DM) and ±2 kV line-earth (CM) on power ports | |

## Environmental Specifications - Redundant Power Supplies

| Attribute | 1756-PA75R, 1756-PA75RK | 1756-PB75R, 1756-PB75RK |
|---|---|---|
| Conducted RF immunity<br>IEC 61000-4-6 | 15V rms with 1 kHz sine-wave 80% AM from 150 kHz…80 MHz | |
| Conducted audio immunity<br>IEC 945 | 2 W max from rated frequency to the 200th harmonic on AC supply ports | |
| Voltage variation<br>IEC 61000-4-11 | 30% dips for 1 period at 0° and 180° on AC supply ports<br>60% dips for 5 and 50 periods on AC supply ports<br>±10% fluctuations for 15 min on AC supply ports<br>>95% interruptions for 250 periods on AC supply ports | – |
| Voltage variation<br>IEC 61000-4-29 | – | 10 ms interruption on DC supply ports(1)<br>60% dips for 100 ms on DC supply ports<br>100% dips for 50 ms on DC supply ports<br>±20% fluctuations for 15 min on DC supply ports<br>5 s interruptions on DC supply ports(2) |

(1) Short interruption test verifies ride through. The supply remains fully functional under this condition.
(2) Long interruption test verifies that repetitive inrush surge currents do not create any unsafe conditions. The supply fully shuts down and starts up in this test.

## Certifications - Redundant Power Supplies

| Certification(1) | 1756-PA75R, 1756-PA75RK | 1756-PB75R, 1756-PB75RK |
|---|---|---|
| c-UL-us | UL Listed Industrial Control Equipment, certified for US and Canada. See UL File E65584.<br>UL Listed for Class I, Division 2 Group A,B,C,D Hazardous Locations, certified for U.S. and Canada. See UL File E194810. | |
| CSA | CSA Certified Process Control Equipment. See CSA File LR54689C.<br>CSA Certified Process Control Equipment for Class I, Division 2 Group A,B,C,D Hazardous Locations. See CSA File LR69960C. | |
| FM | FM Approved Equipment for use in Class I Division 2 Group A,B,C,D Hazardous Locations | |
| CE | European Union 2014/30/EU EMC Directive, compliant with:<br>• EN 61326-1; Meas./Control/Lab., Industrial Requirements<br>• EN 61000-6-2; Industrial Immunity<br>• EN 61000-6-4; Industrial Emissions<br>• EN 61131-2; Programmable Controllers (Clause 8, Zone A & B)<br>European Union 2014/35/EU LVD, compliant with:<br>• EN 61131-2; Programmable Controllers (Clause 11) | |
| RCM | Australian Radiocommunications Act, compliant with:<br>• EN 61000-6-4; Industrial Emissions | |
| Ex | – | European Union 2014/34/EU ATEX Directive, compliant with:<br>• EN 60079-0; General Requirements<br>• EN 60079-15; Potentially Explosive Atmospheres, Protection "n"<br>• II 3 G Ex nA IIC T4 Gc<br>• DEMKO13ATEX1325026X |
| IECEx | – | IECEx System, compliant with:<br>• IEC 60079-0; General Requirements<br>• IEC 60079-15; Potentially Explosive Atmospheres, Protection "n"<br>• II 3 G Ex nA IIC T4 Gc<br>• IECEx UL 14.0008X |
| KC | Korean Registration of Broadcasting and Communications Equipment, compliant with:<br>• Article 58-2 of Radio Waves Act, Clause 3 | |
| EAC | Russian Customs Union TR CU 020/2011 EMC Technical Regulation<br>Russian Customs Union TR CU 004/2011 LV Technical Regulation | |

(1) When marked. See the Product Certification link at http://www.ab.com for Declarations of Conformity, Certificates, and other certification details.

## Technical Specifications - ControlLogix-XT Redundant Power Supplies

| Attribute | 1756-PAXTR | 1756-PBXTR |
|---|---|---|
| Input voltage range | 85…265V AC[2] | 18…32V DC |
| Input voltage | 120V/240V AC | 24V DC |
| Input frequency range | 47…63 Hz | – |
| Input power, max | 75VA 65 W | 81 W |
| Output power, max | 42 W @ 0…60 °C (32…140 °F) | 52 W |
| Inrush current, max | 20 A | 30 A |
| Current capacity @ 1.2V | 1.5 A | |
| Current capacity @ 3.3V | 4 A | |
| Current capacity @ 5.1V | 8 A | 10 A |
| Current capacity @ 24V | 1.75 A | 2.1 A |
| Annunciator power | 240V AC 50/60 Hz, 240V DC, 50 mA, resistive only | 240V AC 50/60 Hz, 240V DC, 50 mA, resistive only<br>90V DC for ATEX/IECEx |
| Isolation voltage | 250V (continuous), Reinforced Insulation Type, Power Input to Backplane, Power Input to Annunciator, Annunciator to Backplane<br>Type tested at 3250V DC for 60 s | |
| Dimensions (HxWxD), approx | 17.5 x 14.5 x 13.7 cm (6.9 x 5.7 x 5.4 in.) | |
| Weight, approx | 1.45 kg (3.2 lb) | |
| Chassis | 1756-A4/B, 1756-A7/B, 1756-A10/B, 1756-A13/B, 1756-A17/B, 1756-A4LXT/B, 1756-A5XT/B, 1756-A7LXT/B, 1756-A7XT/B<br>1756-A4/C, 1756-A7/C, 1756-A10/C, 1756-A13/C, 1756-A17/C, 1756-A7XT/C | |
| Wire size | Power:<br>2.5 $mm^2$ (14 AWG) solid or stranded copper wire rated at 90 °C (194 °F), or greater, 1.2 mm (3/64 in.) insulation max<br><br>Annunciator:<br>0.25…2.5 $mm^2$ (22…14 AWG) solid or stranded copper wire rated at 90 °C (194 °F), or greater, 1.2 mm (3/64 in.) insulation max | |
| Wire category [1] | 1 - on power ports<br>3 - on annunciator ports<br>3 - on 1756-CPR2 connections | |
| Pilot duty rating | Annunciator - not rated | |
| Conductor screw torque | 0.79 N•m (7 lb•in) | |
| North American temperature code | T4A | |
| ATEX temperature code | – | T4 |
| IEC temperature code | – | T4 |
| Enclosure type rating | None (open-style) | |

(1) Use this conductor category information to plan conductor routing. See Industrial Automation Wiring and Grounding Guidelines, publication 1770-4.1.

(2) UL certification for 120/240V AC, 50/60 Hz nominal. Rockwell Automation specified 85…265V AC, 47…63 Hz.

## Environmental Specifications - XT Redundant Power Supplies

| Attribute | 1756-PAXTR | 1756-PBXTR |
|---|---|---|
| Temperature, operating<br>IEC 60068-2-1 (Test Ad, Operating Cold),<br>IEC 60068-2-2 (Test Bd, Operating Dry Heat),<br>IEC 60068-2-14 (Test Nb, Operating Thermal Shock) | -25…+70 °C (13…+158 °F) | |
| Temperature, surrounding air, max | 70 °C (158 °F) | |
| Temperature, nonoperating<br>IEC 60068-2-1 (Test Ab, Unpackaged Nonoperating Cold),<br>IEC 60068-2-2 (Test Bb, Unpackaged Nonoperating Dry Heat),<br>IEC 60068-2-14 (Test Na, Unpackaged Nonoperating Thermal Shock) | -40…+85 °C (-40…+185 °F) | |
| Relative humidity<br>IEC 60068-2-30 (Test Db, Unpackaged Damp Heat) | 5…95% noncondensing | |
| Vibration<br>IEC 60068-2-6 (Test Fc, Operating) | 2 g @ 10…500 Hz | |
| Shock, operating<br>IEC 60068-2-27 (Test Ea, Unpackaged Shock) | 30 g | |
| Shock, nonoperating<br>IEC 60068-2-27 (Test Ea, Unpackaged Shock) | 50 g | |
| Emissions | IEC 61000-6-4 | |
| ESD immunity<br>IEC 61000-4-2 | 6 kV contact discharges<br>8 kV air discharges | |
| Radiated RF immunity<br>IEC 61000-4-3 | 10V/m with 1 kHz sine-wave 80% AM from 80…2000 MHz<br>10V/m with 200 Hz 50% Pulse 100% AM @ 900 MHz<br>10V/m with 200 Hz 50% Pulse 100% AM at 1890 MHz<br>3V/m with 1 kHz sine-wave 80% AM from 2000…2700 MHz | |
| EFT/B immunity<br>IEC 61000-4-4 | ±4 kV at 5 kHz on power ports<br>±4 kV at 5 kHz on annunciator ports | |
| Surge transient immunity<br>IEC 61000-4-5 | ±1 kV line-line (DM) and ±2 kV line-earth (CM) on power ports | |
| Conducted RF immunity<br>IEC 61000-4-6 | 15V rms with 1 kHz sine-wave 80% AM from 150 kHz…80 MHz | 10V rms with 1 kHz sine-wave 80% AM from 150 kHz…80 MHz |
| Conducted audio immunity<br>IEC 945 | 2 W max from rated frequency to the 200th harmonic on AC supply ports | |
| Voltage variation<br>IEC 61000-4-11 | 30% dips for 1 period at 0° and 180° on AC supply ports<br>60% dips for 5 and 50 periods on AC supply ports<br>±10% fluctuations for 15 min on AC supply ports<br>>95% interruptions for 250 periods on AC supply ports | – |
| Voltage variation<br>IEC 61000-4-29 | – | 10 ms interruption on DC supply ports(1)<br>60% dips for 100 ms on DC supply ports<br>100% dips for 50 ms on DC supply ports<br>±20% fluctuations for 15 min on DC supply ports<br>5 s interruptions on DC supply ports(2) |

(1) Short interruption test verifies ride through. The supply remains fully functional under this condition.
(2) Long interruption test verifies that repetitive inrush surge currents do not create any unsafe conditions. The supply fully shuts down and starts up in this test.

### Certifications - XT Redundant Power Supplies

| Certification[1] | 1756-PAXTR | 1756-PBXTR |
|---|---|---|
| c-UL-us | UL Listed Industrial Control Equipment, certified for US and Canada. See UL File E65584.<br>UL Listed for Class I, Division 2 Group A,B,C,D Hazardous Locations, certified for U.S. and Canada. See UL File E194810. | |
| CE | European Union 2014/30/EU EMC Directive, compliant with:<br>• EN 61326-1; Meas./Control/Lab., Industrial Requirements<br>• EN 61000-6-2; Industrial Immunity<br>• EN 61000-6-4; Industrial Emissions<br>• EN 61131-2; Programmable Controllers (Clause 8, Zone A & B)<br>European Union 2014/35/EU LVD, compliant with:<br>• EN 61131-2; Programmable Controllers (Clause 11) | |
| RCM | Australian Radiocommunications Act, compliant with:<br>• EN 61000-6-4; Industrial Emissions | |
| Ex | – | European Union 2014/34/EU ATEX Directive, compliant with:<br>• EN 60079-0; General Requirements<br>• EN 60079-15; Potentially Explosive Atmospheres, Protection "n"<br>• II 3 G Ex nA IIC T4 Gc<br>• DEMKO13ATEX1325026X |
| IECEx | – | IECEx System, compliant with:<br>• IEC 60079-0; General Requirements<br>• IEC 60079-15; Potentially Explosive Atmospheres, Protection "n"<br>• II 3 G Ex nA IIC T4 Gc<br>• IECEx UL 14.0008X |
| KC | Korean Registration of Broadcasting and Communications Equipment, compliant with:<br>• Article 58-2 of Radio Waves Act, Clause 3 | |
| EAC | Russian Customs Union TR CU 020/2011 EMC Technical Regulation<br>Russian Customs Union TR CU 004/2011 LV Technical Regulation | |

(1) When marked. See the Product Certification link at http://www.ab.com for Declarations of Conformity, Certificates, and other certification details.

## Redundant Power Supply Chassis Adapter

### Technical Specifications - Redundant Power Supplies Chassis Adapter

| Attribute | 1756-PSCA2, 1756-PSCA2K | 1756-PSCA2XT |
|---|---|---|
| Current capacity @ 1.2V DC | 1.5 A | |
| Current capacity @ 3.3V DC | 4 A | |
| Current capacity @ 5.1V DC | 15 A | |
| Current capacity @ 24V DC | 2.8 A | |
| Wire category [1] | 3 - on 1756-CPR2 connections | |
| North American temperature code | T5 | T4A |
| ATEX temperature code | T4 | |
| IEC temperature code | T4 | |
| Enclosure type rating | None (open-style) | |

(1) Use this conductor category information to plan conductor routing. See the Industrial Automation Wiring and Grounding Guidelines, publication 1770-4.1.

## Environmental Specifications - Redundant Power Supplies Chassis Adapter

| Attribute | 1756-PSCA2, 1756-PSCA2K | 1756-PSCA2XT |
|---|---|---|
| Temperature, operating<br>IEC 60068-2-1 (Test Ad, Operating Cold),<br>IEC 60068-2-2 (Test Bd, Operating Dry Heat),<br>IEC 60068-2-14 (Test Nb, Operating Thermal Shock) | 0…60 °C (32…140 °F) | -25…+70 °C (-13…+158 °F) |
| Temperature, surrounding air, max | 60 °C (140 °F) | 70 °C (158 °F) |
| Temperature, nonoperating<br>IEC 60068-2-1 (Test Ab, Unpackaged Nonoperating Cold),<br>IEC 60068-2-2 (Test Bb, Unpackaged Nonoperating Dry Heat),<br>IEC 60068-2-14 (Test Na, Unpackaged Nonoperating Thermal Shock) | -40…+85 °C (-40…+185 °F) | |
| Relative humidity<br>IEC 60068-2-30 (Test Db, Unpackaged Damp Heat) | 5…95% noncondensing | |
| Vibration<br>IEC 60068-2-6 (Test Fc, Operating) | 2 g @ 10…500 Hz | |
| Shock, operating<br>IEC 60068-2-27 (Test Ea, Unpackaged Shock) | 30 g | |
| Shock, nonoperating<br>IEC 60068-2-27 (Test Ea, Unpackaged Shock) | 50 g | |
| Emissions | IEC 61000-6-4 | |
| ESD immunity<br>IEC 61000-4-2 | 6 kV contact discharges<br>8 kV air discharges | |
| Radiated RF immunity<br>IEC 61000-4-3 | 10V/m with 1 kHz sine-wave 80% AM from 80…2000 MHz<br>10V/m with 200 Hz 50% Pulse 100% AM at 900 MHz<br>10V/m with 200 Hz 50% Pulse 100% AM at 1890 MHz<br>3V/m with 1 kHz sine-wave 80% AM from 2000…2700 MHz | |

## Certifications - Redundant Power Supplies Chassis Adapter

| Certification(1) | 1756-PSCA2, 1756-PSCA2K | 1756-PSCA2XT |
|---|---|---|
| c-UL-us | UL Listed Industrial Control Equipment, certified for US and Canada. See UL File E65584.<br>UL Listed for Class I, Division 2 Group A,B,C,D Hazardous Locations, certified for U.S. and Canada. See UL File E194810. | |
| CSA | CSA Certified Process Control Equipment. See CSA File LR54689C.<br>CSA Certified Process Control Equipment for Class I, Division 2 Group A,B,C,D Hazardous Locations. See CSA File LR69960C. | – |
| FM | FM Approved Equipment for use in Class I Division 2 Group A,B,C,D Hazardous Locations | – |
| CE | European Union 2014/30/EU EMC Directive, compliant with:<br>• EN 61326-1; Meas./Control/Lab., Industrial Requirements<br>• EN 61000-6-2; Industrial Immunity<br>• EN 61000-6-4; Industrial Emissions<br>• EN 61131-2; Programmable Controllers (Clause 8, Zone A & B) | |
| RCM | Australian Radiocommunications Act, compliant with:<br>• EN 61000-6-4; Industrial Emissions | |
| Ex | European Union 2014/34/EU ATEX Directive, compliant with:<br>• EN 60079-0; General Requirements<br>• EN 60079-15; Potentially Explosive Atmospheres, Protection "n"<br>• II 3 G Ex nA IIC T4 Gc<br>• DEMKO13ATEX1325026X | European Union 2014/34/EU ATEX Directive, compliant with:<br>• EN 60079-0; General Requirements<br>• EN 60079-15; Potentially Explosive Atmospheres, Protection "n"<br>• II 3 G Ex nA IIC T4 Gc<br>• DEMKO13ATEX1325026X |
| IECEx | IECEx System, compliant with:<br>• IEC 60079-0; General Requirements<br>• IEC 60079-15; Potentially Explosive Atmospheres, Protection "n"<br>• II 3 G Ex nA IIC T4 Gc<br>• IECEx UL 14.0008X | IECEx System, compliant with:<br>• IEC 60079-0; General Requirements<br>• IEC 60079-15; Potentially Explosive Atmospheres, Protection "n"<br>• II 3 G Ex nA IIC T4 Gc<br>• IECEx UL 14.0008X |
| KC | Korean Registration of Broadcasting and Communications Equipment, compliant with:<br>• Article 58-2 of Radio Waves Act, Clause 3 | |
| EAC | Russian Customs Union TR CU 020/2011 EMC Technical Regulation<br>Russian Customs Union TR CU 004/2011 LV Technical Regulation | |

(1) When marked. See the Product Certification link at http://www.ab.com for Declarations of Conformity, Certificates, and other certification details.

## Power Load and Transformer Sizing

The following graphs show the input power requirements for slim and standard power supplies, given the power that they are providing to the modules in the chassis.

Follow these steps to determine the power requirements for your chassis.

1. Calculate the Backplane Power load by adding the power draw (in watts) for all planned modules.

   For module power draws, refer to the module specification tables in the ControlLogix Selection Guide, publication 1756-SG001.
2. Locate the Backplane Power load on the vertical (y) axis of the graph and determine the corresponding Real Power (input-power) rating on the horizontal (x) axis.

   The Real Power value is the amount of power that is consumed by the power supply.

### Slim Power Supply Power Requirements

**1756-PA50, 1756-PA50K @ 50 °C (AC)**

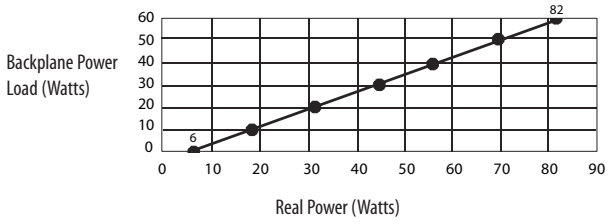


**1756-PA30XT (AC)**

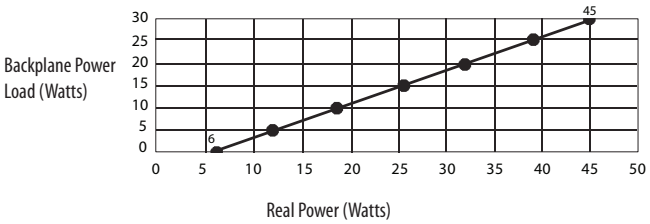


**1756-PA50, 1756-PA50K @ 60 °C (AC)**

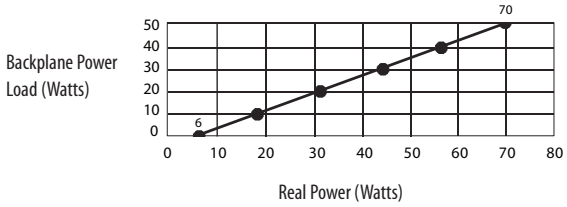


**1756-PB30XT (DC)**

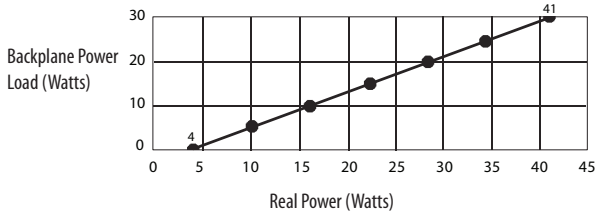


**1756-PB50, 1756-PB50K @ 50 °C (DC)**

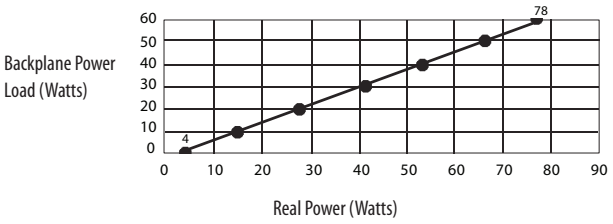


**1756-PB50, 1756-PB50K @ 60 °C (DC)**

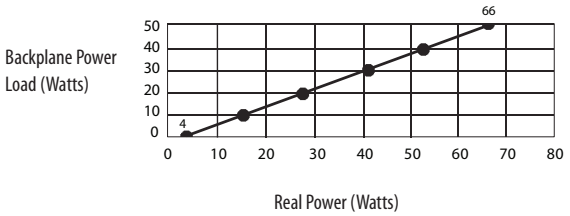


Apparent Power (Watts) = Transformer Load (VA) = Real Power (Watts)

## Standard Power Supply Power Requirements

**1756-PA72/C, 1756-PA72K/C, 1756-PA75/B (AC), 1756-PA75K/B (AC)**

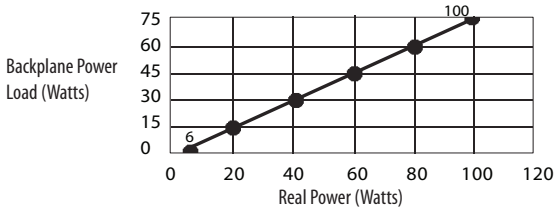


**1756-PB72/C, 1756-PB72K/C, 1756-PB75/B (AC), 1756-PB75K/B (DC)**

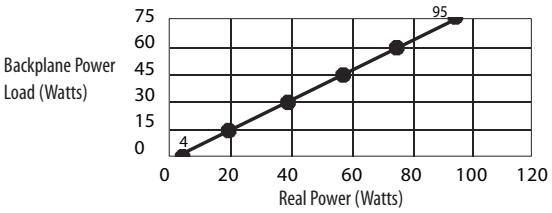


**1756-PH75/B, 1756-PC75/B (DC)**

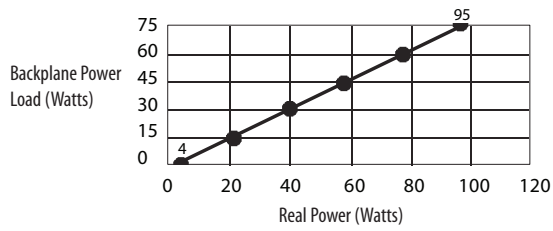


**1756-PAXT (AC)**

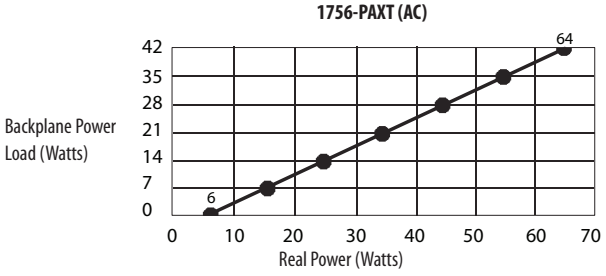


**1756-PAXTR (AC)**

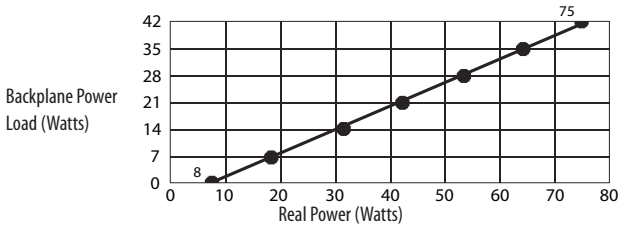


**1756-PBXT (DC)**

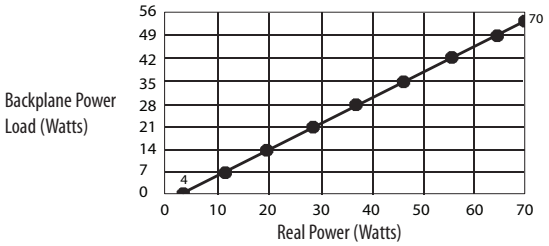


**1756-PBXTR (DC)**

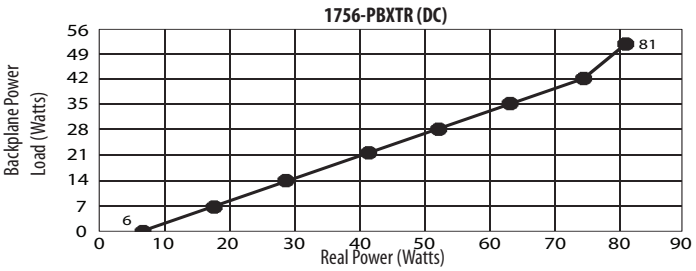


**1756-PA75R/A, 1756-PA75RK/A(AC)**

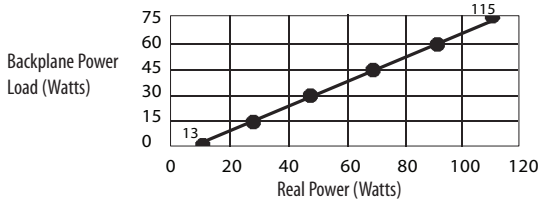


**1756-PB75R/A, 1756-PB75RK/A (DC)**

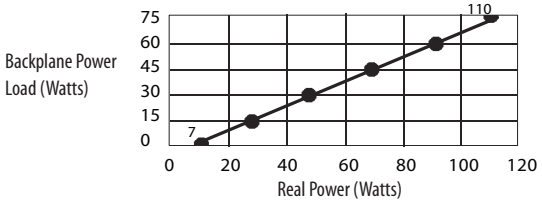


Apparent Power (Watts) = Transformer Load (VA) = Real Power (Watts)

## Additional Resources

These documents contain additional information concerning related products from Rockwell Automation.

| Resource | Description |
|---|---|
| ControlLogix Chassis Specifications Technical Data, publication 1756-TD006 | Provides technical specifications for ControlLogix chassis. |
| ControlLogix Selection Guide, publication 1756-SG001 | Provides overview of the ControlLogix system and its products. |
| ControlLogix Power Supply Installation Instructions, publication 1756-IN619 | Provides information on how to install ControlLogix standard power supplies. |
| ControlLogix Redundant Power Supply Installation Instructions, publication 1756-IN620 | Provides information on how to install ControlLogix redundant power supplies. |
| ControlLogix Chassis Installation Instructions, publication 1756-IN621 | Provides information on how to install ControlLogix chassis. |
| ControlLogix System User Manual, publication 1756-UM001 | Provides information on how to install, configure, program, and use ControlLogix systems. |
| Industrial Automation Wiring and Grounding Guidelines, publication 1770.4.1 | Provides general guidelines for installing a Rockwell Automation® industrial system. |
| Product Certifications website, http://www.rockwellautomation.com/global/certification/overview.page | Provides declarations of conformity, certificates, and other certification details. |

You can view or download publications at http://www.rockwellautomation.com/literature/. To order paper copies of technical documentation, contact your local Allen-Bradley distributor or Rockwell Automation sales representative.

## Rockwell Automation Support

Use the following resources to access support information.

| | | |
|---|---|---|
| **Technical Support Center** | Knowledgebase Articles, How-to Videos, FAQs, Chat, User Forums, and Product Notification Updates. | www.rockwellautomation.com/knowledgebase |
| **Local Technical Support Phone Numbers** | Locate the phone number for your country. | www.rockwellautomation.com/global/support/get-support-now.page |
| **Direct Dial Codes** | Find the Direct Dial Code for your product. Use the code to route your call directly to a technical support engineer. | www.rockwellautomation.com/global/support/direct-dial.page |
| **Literature Library** | Installation Instructions, Manuals, Brochures, and Technical Data. | www.rockwellautomation.com/literature |
| **Product Compatibility and Download Center (PCDC)** | Get help determining how products interact, check features and capabilities, and find associated firmware. | www.rockwellautomation.com/global/support/pcdc.page |

## Documentation Feedback

Your comments will help us serve your documentation needs better. If you have any suggestions on how to improve this document, complete the How Are We Doing? form at http://literature.rockwellautomation.com/idc/groups/literature/documents/du/ra-du002_-en-e.pdf.

Rockwell Automation maintains current product environmental information on its website at http://www.rockwellautomation.com/rockwellautomation/about-us/sustainability-ethics/product-environmental-compliance.page.

Allen-Bradley, ControlLogix, ControlLogix-XT, FLEX I/O-XT, LISTEN. THINK. SOLVE, Rockwell Automation, and Rockwell Software are trademarks of Rockwell Automation, Inc.
Trademarks not belonging to Rockwell Automation are property of their respective companies.

Rockwell Otomasyon Ticaret A.Ş., Kar Plaza İş Merkezi E Blok Kat:6 34752 İçerenköy, İstanbul, Tel: +90 (216) 5698400

**www.rockwellautomation.com**

**Power, Control and Information Solutions Headquarters**

Americas: Rockwell Automation, 1201 South Second Street, Milwaukee, WI 53204-2496 USA, Tel: (1) 414.382.2000, Fax: (1) 414.382.4444
Europe/Middle East/Africa: Rockwell Automation NV, Pegasus Park, De Kleetlaan 12a, 1831 Diegem, Belgium, Tel: (32) 2 663 0600, Fax: (32) 2 663 0640
Asia Pacific: Rockwell Automation, Level 14, Core F, Cyberport 3, 100 Cyberport Road, Hong Kong, Tel: (852) 2887 4788, Fax: (852) 2508 1846

Publication 1756-TD005H-EN-E - November 2017
Supersedes Publication 1756-TD005G-EN-E - June 2017

Copyright © 2017 Rockwell Automation, Inc. All rights reserved. Printed in the U.S.A.

REVIEWED BY CONTRACTOR

Kudlik Construction Ltd.

NAME: Sandra Rousseau P.Eng.

DATE: Jun 18, 2018

STANTEC PROJECT #: 110126045

This review by Stantec is for general conformance with the design concept of Stantec's design of the:

☐ Architectural ☐ Structural ☐ Mechanical ☐ Electrical ☑ Other Instrumentation

component(s) only and does not mean that Stantec has verified or approves the shop drawing(s). The Contractor remains solely responsible for the shop drawing(s) and this review by Stantec does not relieve the Contractor of the Contractor's responsibility for errors or omissions in the shop drawing(s) or for meeting all requirements of the contract documents. This review does not mean that Stantec approves the detailed design inherent in the shop drawing, responsibility for which shall remain with the Contractor submitting same, nor does this review mean that Stantec accepts any deviation of the shop drawing(s) from the contract documents. The Contractor is responsible for confirming all dimensions and correlating them at the job site, for all construction means, methods and techniques, and for coordination of construction work of all trades, including coordination of all shop drawings.

SUBMITTAL # DA-IC-03-CPL900 (2018-06-18)

Stantec

☐ REVIEWED

☑ REVIEWED, AS NOTED

☐ REVISE AND RESUBMIT

☐ NOT REVIEWED

DATE 2018-JUN-21

BY David Hutchison, P.Eng.

# TDS AND SHOI

## DA-IC-03-CPL900 panel

| INFORMATION | |
|---|---|
| Project : **WASTEWATER PLANT - IQALUIT** | |
| Client : Kudlik Construction Ltd.<br>To Sandra Rousseau P.Eng./ Project Manager | Project number : **2018-062** |
| Contractor : Norclair inc. | Project number Norclair : **P1039** |
| Address : 1100, Montee Masson, Laval, QC, Canada H7E 4P2 | |
| Project Manager : Steven Wieland | E-mail: swieland@norclair.ca |
| Phone: 450-688-4012 # 708 | Cell.: 514-608-0619 |

| Information, subcontractor or supplier | |
|---|---|
| Sub supplier : Entreprise LM | |
| Contact : | Phone : 514-523-2831 |

| Information on the equipment or the proposed materials | |
|---|---|
| Speciality : Instruments and controls | |
| Equipment :<br>CPL-900 control panel package | |
| Drawing reference : | |
| Specification reference : 40 05 23 | Division : |
| Article : | Number Page : 26 |

**Please note that material not shown in the equivalent table are as per specifications. Thank you for getting back to us ASAP as orders would ideally be placed Friday June 22nd.**

## CONSULTANT APPROVAL

[DH] Alternatives are acceptable. Contractor is responsible for ensuring new components fit within the existing cabinet.
[DH] All labels and lamecoids to be provided in English

STANTEC PROJECT #: 110126045

This review by Stantec is for general conformance with the design concept of Stantec's design of the:

☐ Architectural ☐ Structural ☐ Mechanical ☐ Electrical ☑ Other Instrumentation

component(s) only and does not mean that Stantec has verified or approves the shop drawing(s). The Contractor remains solely responsible for the shop drawing(s) and this review by Stantec does not relieve the Contractor of the Contractor's responsibility for errors or omissions in the shop drawing(s) or for meeting all requirements of the contract documents. This review does not mean that Stantec approves the detailed design inherent in the shop drawing, responsibility for which shall remain with the Contractor submitting same, nor does this review mean that Stantec accepts any deviation of the shop drawing(s) from the contract documents. The Contractor is responsible for confirming all dimensions and correlating them at the job site, for all construction means, methods and techniques, and for coordination of construction work of all trades, including coordination of all shop drawings.

SUBMITTAL # DA-IC-03-CPL900 (2018-06-18)

Stantec

☐ REVIEWED

☑ REVIEWED, AS NOTED

☐ REVISE AND RESUBMIT

☐ NOT REVIEWED

DATE 2018-JUN-21

BY David Hutchison, P.Eng.

1100, Montée Masson
Laval, QC, Canada
H7E 4P2

Phone. : 450-688-4012
Fax : 450-661-6341
E-Mail : info@norclair.ca
www.norclair.ca

Date : 2018-06-18
Project No : 110126045

# IQALUIT WASTEWATER TREATMENT PLANT UPGRADE CPL 900

Entreprises L.M.

| CPL-900 | | | EQUIVALENT | | | |
|---|---|---|---|---|---|---|
| **Manufacturier** | **Part Number** | **Description** | **Manufacturier** | **Part Number** | **Description** | **Data Sheet** |
| N-TRON | 116TX | 16 PORT ETHERNET SWITCH, C/W DIN MOUNT ( | WEIDMULLER | 1241000000 | IE-SW-VL16-16TX | http://catalog.weidmueller.com/catalog/Start.do?localeId=en |
| | | | | | | |
| OMRON | G2R1SNDC24S | RELAY WITH LED INDICATOR | SCHNEIDER | RXG13BD | 1CO 10A RELAY-LTBLED 24VDC | https://www.schneider-electric.us/en/product/RXG13BD/inter |
| OMRON | P2RF-05-E | RELAY SOCKET | SCHNEIDER | RGZE1S35M | 1CO SEPARATE TERMINAL SOCKET WITH CL | https://www.schneider-electric.us/en/product/RGZE1S35M/so |
| | | | | | | |
| HOFFMAN | A56P44F1 | FULL SIZE MOUNTING PANEL | EXM | 885 SP6048 | PLAQUE DE FOND POUR 5500 DDS6048 | http://www.exmweb.com/index.php?option=com_content&vie |
| HOFFMAN | ALFSWD | DOOR SWITCH | EXM | 889 FLRDS | REMOTE DOOR SWITCH - SERIES FLRDS | 889 flrds.pdf (PDF) |
| HOFFMAN | F8T5 | FLUORESCENT LIGHT BULB | EXM | 880 LED18 | NEON LIGHTS 18" | 880 led18.pdf (PDF) |
| HOFFMAN | LF120V18 | 120 VAC FLUORESCENT LIGHT KIT | | | | |
| | | | | | | |
| ALLEN BRADLEY | 1492-SPM1B030 | 30A SINGLE POLE CIRCUIT BREAKER | SCHNEIDER | MG17407 | PROTECTEUR SUPPLEMENTAIRE 30A 1P | https://www.schneider-electric.us/en/product/MG17407/mult |
| ALLEN BRADLEY | 1606-XLS480E | 24VDC POWER SUPPLY 20A | WEIDMULLER | 1469510000 | PRO ECO 480W 24V 20A | http://catalog.weidmueller.com/catalog/Start.do?localeId=hk |
| ALLEN BRADLEY | 1492-SP1B150 | 15A SINGLE POLE CIRCUIT BREAKER | SCHNEIDER | G17406 | DISJONCTEUR A BOITIER MOULE 15A | https://www.schneider-electric.us/en/product/MG17406/mult |
| ALLEN BRADLEY | 1492-SP1B100 | 10A SINGLE POLE CIRCUIT BREAKER | SCHNEIDER | MG24116 | COURBURE B C60N 1 POLE 10 A | https://www.schneider-electric.us/en/product/MG24116/mult |
| | | | | | | |
| PHOENIX CONTACT | UTB 2,5 - 3044636 | 2-TIER FEED THROUGH TERMINAL BLOCK | WEIDMULLER | 1041100000 | WDK 2.5 ZQV PLUGGABLE JUMPER | http://catalog.weidmueller.com/catalog/Start.do?localeId=en |
| PHOENIX CONTACT | UTTB 2,5 - 3044636 | END COVERS FOR ITEM 24 | WEIDMULLER | 1059100000 | AP FOR WDK 2.5,WM,BG | http://catalog.weidmueller.com/catalog/Start.do?localeId=en |
| PHOENIX CONTACT | ST 2,5-PE/L/L-3036097 | 2-TIER FEED SPRING CAGE TERMINAL BLOCK (2 | WEIDMULLER | 1131750000 | ZDLD 2.5-2N/PE/L/L | http://catalog.weidmueller.com/catalog/Start.do?localeId=en |
| PHOENIX CONTACT | D-ST 2,5-3L-3L-3036660 | END COVERS FOR ITEM 26 | WEIDMULLER | 1782340000 | ZAP/TW ZDLD 2.5-2N | http://catalog.weidmueller.com/catalog/Start.do?localeId=en |
| PHOENIX CONTACT | UT 4-L/HESI-3214325 | FUSED MODULAR TERMINAL BLOCK WITH FEED | WEIDMULLER | 1833600000 | WDK 2.5/TR-DU/O TNHE | http://catalog.weidmueller.com/catalog/Start.do?localeId=en |
| | | | WEIDMULLER | 7921570000 | SIHA3/G20,LED,10-36VAC/DC | http://catalog.weidmueller.com/catalog/Start.do?localeId=en& |
| | | | WEIDMULLER | 1839850000 | WAP WDK 2.5N/TR-DU | http://catalog.weidmueller.com/catalog/Start.do?localeId=en |
| PHOENIX CONTACT | FBS 10-6 - 3030365 | PLUG IN BRIDGE | WEIDMULLER | 1693880000 | ZQV 2.5N/10 GE (YELLOW) | http://catalog.weidmueller.com/catalog/Start.do?localeId=en |
| | | | WEIDMULLER | 1608940000 | ZQV 2.5/10 | http://catalog.weidmueller.com/catalog/Start.do?localeId=en |
| | | | WEIDMULLER | 1054460000 | WQV 2.5/10 FOR WDU 2.5,10 PO | http://catalog.weidmueller.com/procat/Product.jsp;jsessionid= |
| PHOENIX CONTACT | FBS 20-6 - 3030365 | PLUG IN BRIDGE | WEIDMULLER | 1909000000 | ZQV 2.5N/20 YELLOW | http://catalog.weidmueller.com/catalog/Start.do?localeId=en |
| | | | WEIDMULLER | 1908960000 | ZQV 2.5/20 YL | http://catalog.weidmueller.com/procat/Product.jsp;jsessionid= |
| | | | WEIDMULLER | 1577570000 | WQV 2.5/20 FOR WDU 2.5,20 PO | http://catalog.weidmueller.com/procat/Product.jsp;jsessionid= |
| PHOENIX CONTACT | UM8-0830943 | TERMINAL BLOCK MARKERS | WEIDMULLER | 1609801044 | DEK 5/5 MC-10 NEUT. WS (WHITE) | http://catalog.weidmueller.com/catalog/Start.do?localeId=en |
| | | | | | | |
| T&B | ADR21 | GROUND LUG #2/0 | BURNDY | K2A26U | RACCORD ALUM/CUI 14-2/0AWG 1/4 | https://ecat.burndy.com/Comergent/en/US/adirect/burndy?cm |
| | | | | | | |
| PANDUIT | G3X4LG6 | WIRE DUCT 3"X4 | LEGRAND | 636118 | TRANSCAB CABLE DUCTING BASE+COVER W | https://www.legrand.com/ecat_export/636118-cable-ducting-b |
| PANDUIT | C3LG6 | 3" WIRE DUCT COVER | LEGRAND | 636118 | TRANSCAB CABLE DUCTING BASE+COVER W | https://www.legrand.com/ecat_export/636118-cable-ducting-b |
| | | | | | | |

# City of Iqaluit

# WWTP Upgrade

# Process automation (Division 47)

# CPL-900
# R0: For approval before assembling

| | | | |
|---|---|---|---|
| Dessiné Par / Drawn By: O. Chalifoux-Lauzon<br>Préparé Par / Prepared By: O. Chalifoux-Lauzon<br>Dernière maj / Last update: 18 juin 2018 | Projet / Project: WWTP Upgrade<br>----<br>Dessin De / Drawing Of: Cover Page<br>Page / de: 01 / 21 | Client / Customer: City of Iqaluit<br>----<br>Projet / Project: Pxxxxxx / xxxxxx<br>Dessin N° / Drawing N°: CPL900.DWG | Entreprises L.M. inc.<br>3006 Ste-Catherine est, Montréal, Québec, H1W 2B8<br>Tél: (514) 523-2831 / 1-800-265-2831, Fax: 514-521-2526 |

| | | | | | | | | | | | | | | | |
|---|---|---|---|---|---|---|---|---|---|---|---|---|---|---|---|
| A | | | | | | | | | | | | | | | |
| B | | | | | | | | | | | | | | | |
| C | | | | | | | | | | | | | | | |
| D | | | | | | | | | | | | | | | |
| E | | | | | | | | | | | | | | | |
| F | | | | | | | | | | | | | | | |
| G | | | | | | | | | | | | | | | |
| H | | | | | | | | | | | | | | | |
| I | | | | | | | | | | | | | | | |

Dessiné Par / Drawn By:
O. Chalifoux-Lauzon

Préparé Par / Prepared By:
O. Chalifoux-Lauzon

Dernière maj / Last update:
18 juin 2018

Projet / Project:
WWTP Upgrade
---

Dessin De / Drawing Of:
Bill of materials

Page / de:
02 / 21

Client / Customer:
City of Iqaluit
---

Projet / Project:
Pxxxxxx / xxxxxx

Dessin N° / Drawing N°:
CPL900.DWG

Entreprises L.M. inc
3006 Ste-Catherine est, Montréal, Québec, H1W 2B8
Tél: (514) 523-2831 / 1-800-265-2831, Fax: 514-521-2526

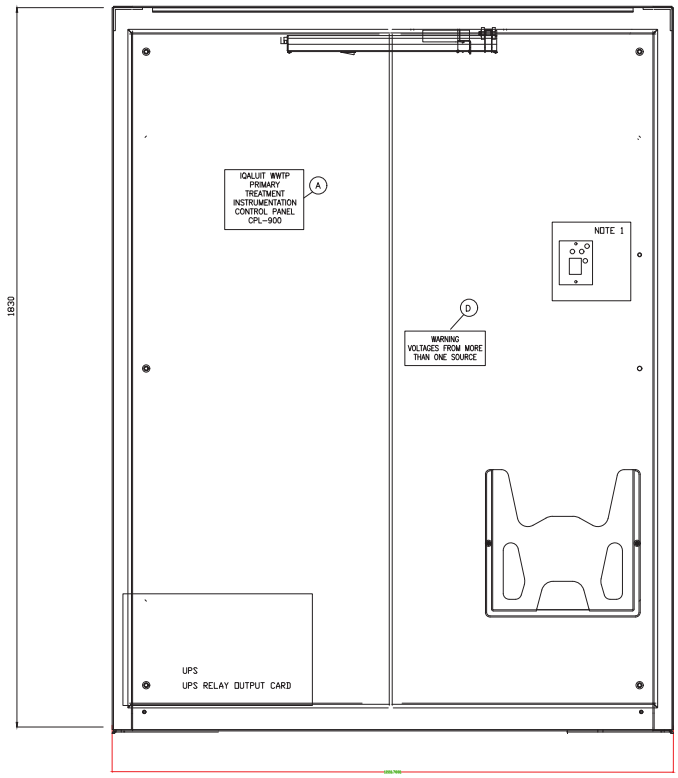


| | | | |
|---|---|---|---|
| Dessiné Par / Drawn By: O. Chalifoux-Lauzon | Projet / Project: WWTP Upgrade | Client / Customer: City of Iqaluit | Entreprises L.M. inc |
| Préparé Par / Prepared By: O. Chalifoux-Lauzon | ---- | ---- | |
| | Dessin De / Drawing Of: Mechanical drawing | Page / de: 03 / 21 | Projet / Project: Pxxxxxx / xxxxxx |
| Dernière maj / Last update: 18 juin 2018 | | | Dessin N° / Drawing N°: CPL900.DWG |

3006 Ste-Catherine est, Montréal, Québec, H1W 2B8
Tél: (514) 523-2831 / 1-800-265-2831, Fax: 514-521-2526

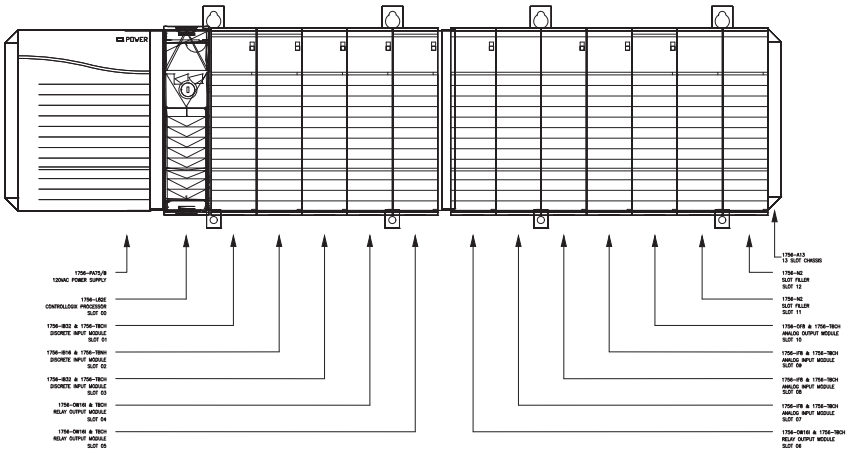


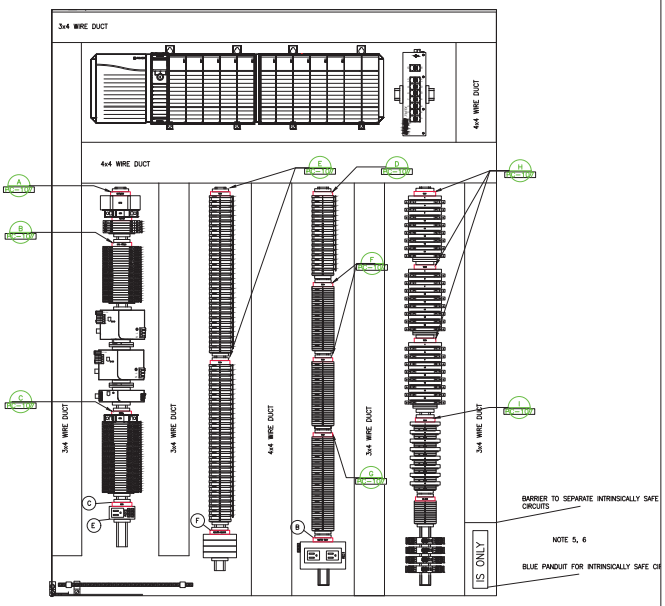


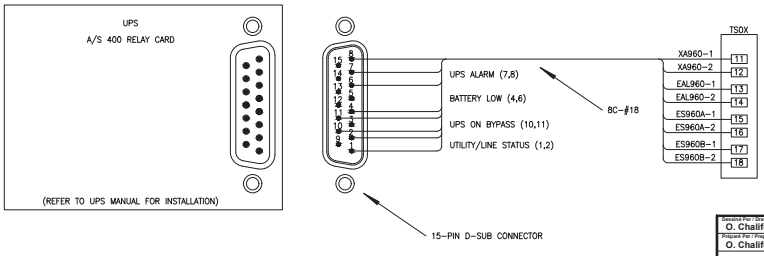


UPS ALARM STATUS WIRING DIAGRAM

NAMEPLATE SCHEDULE

| ITEM | TEXT DESCRIPTION | COLOUR | SIZE (WxH) | QTY |
|---|---|---|---|---|
| A | IQALUIT/INSTRUMENTATION/CONTROL PANEL/ CPL-900 | BLK/WHT Letters | 150X115 | 1 |
| B | LAPTOP ONLY | BLK/WHT Letters | 100X25 | 1 |
| C | UPS | BLK/WHT Letters | 75X25 | 1 |
| D | WARNING/VOLTAGES FROM MORE/THAN ONE SOURCE | RED/WHT Letters | 175X75 | 1 |
| E | LEVEL BULBS | BLK/WHT Letters | 100X25 | 1 |
| F | BEACON RELAYS | BLK/WHT Letters | 100X25 | 1 |

| | | | |
|---|---|---|---|
| Dessiné Par / Drawn By: O. Chalifoux-Lauzon | Projet / Project: WWTP Upgrade ---- | Client / Customer: City of Iqaluit ---- | Entreprises L.M. inc. |
| Préparé Par / Prepared By: O. Chalifoux-Lauzon | | Projet / Project: Pxxxxxx / xxxxxx | 3006 Ste-Catherine est, Montréal, Québec, H1W 2B8 |
| Dernière maj / Last update: 18 juin 2018 | Dessin De / Drawing Of: Mechanical layout | Page / de: 04 / 21 | Dessin N° / Drawing N°: CPL900.DWG | Tél: (514) 523-2831 / 1-800-265-2831, Fax: 514-521-2526 |

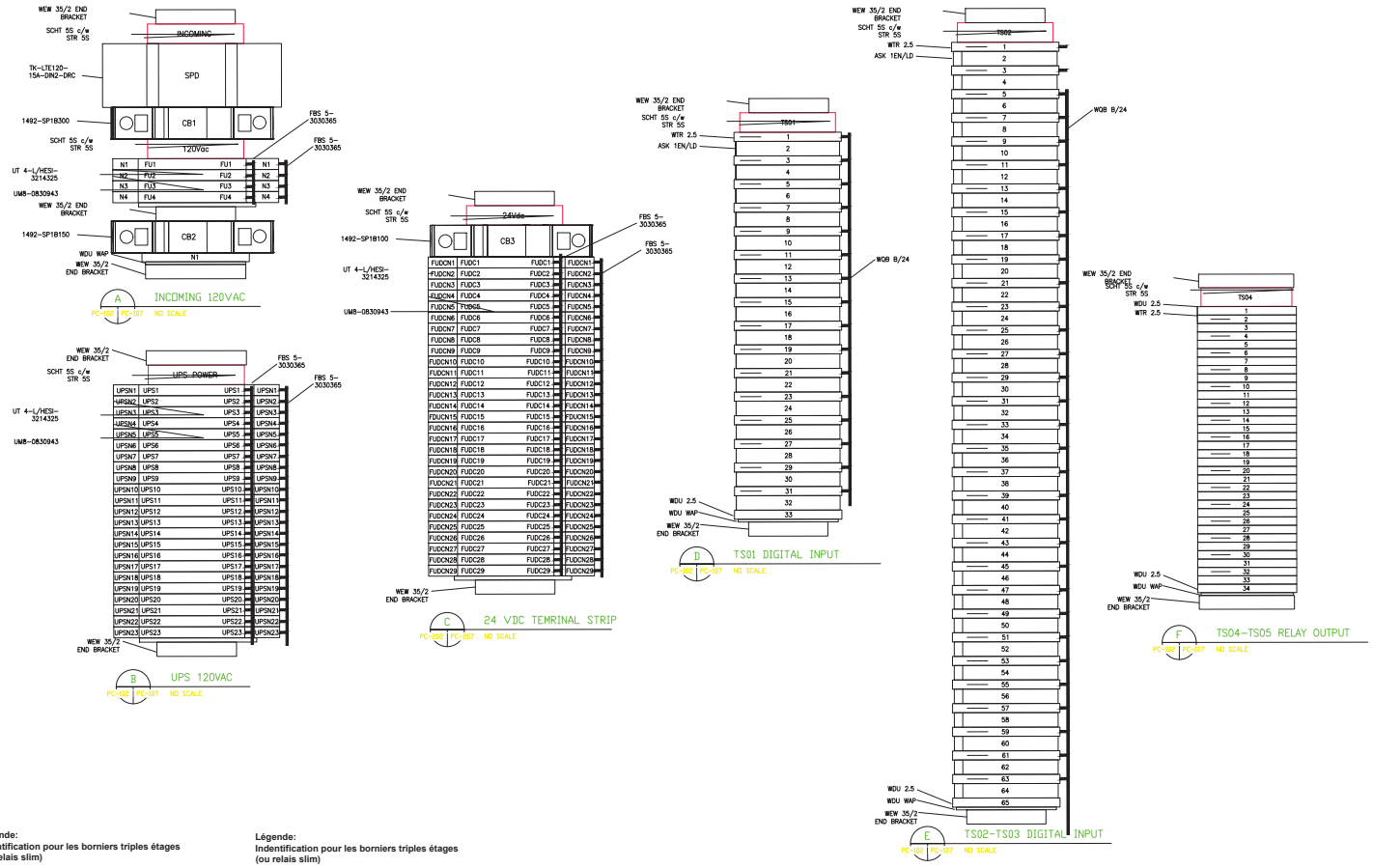


**Légende:**
**Indentification pour les borniers triples étages (ou relais slim)**

XXX / XXX — Étage inférieure de la borne
XXX — Étage supérieur de la borne

**Légende:**
**Indentification pour les borniers triples étages (ou relais slim)**

XXX / XXX / XXX — Étage inférieure de la borne
XXX / XXX — Étage centrale de la borne
XXX — Étage supérieur de la borne

| | | | |
|---|---|---|---|
| Dessiné Par / Drawn By: O. Chalifoux-Lauzon | Projet / Project: WWTP Upgrade | Client / Customer: City of Iqaluit | |
| Préparé Par / Prepared By: O. Chalifoux-Lauzon | ---- | Projet / Project: Pxxxxxx / xxxxxx | Entreprises L.M. inc. |
| Dernière maj / Last update: 18 juin 2018 | Dessin De / Drawing Of: Terminals (1/2) | Page / de: 05 / 21 | Dessin N° / Drawing N°: CPL900.DWG |

3006 Ste-Catherine est, Montréal, Québec, H1W 2B8
Tél: (514) 523-2831 / 1-800-265-2831, Fax: 514-521-2526

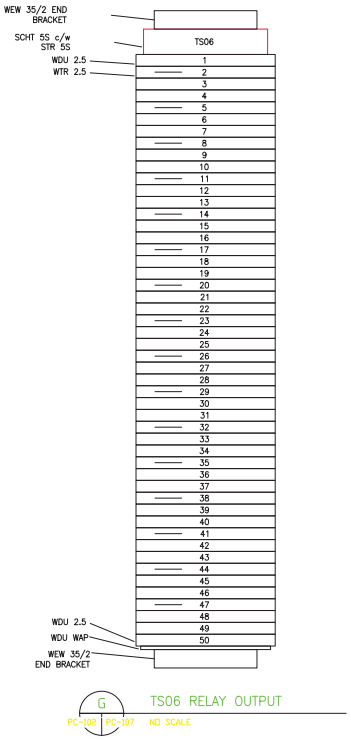


G TS06 RELAY OUTPUT
PC-102 | PC-107 NO SCALE

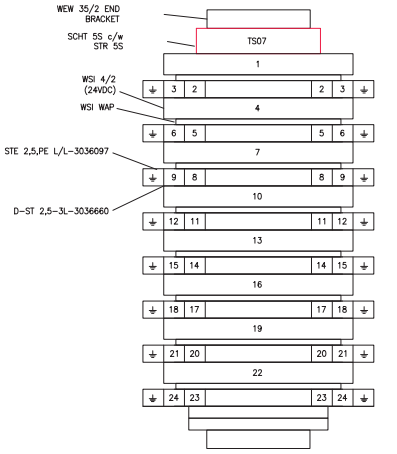


H TS07-TS09 ANALOG INPUT
PC-102 | PC-107 NO SCALE

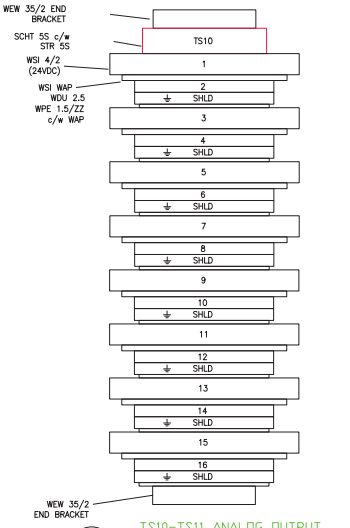


I TS10-TS11 ANALOG OUTPUT
PC-102 | PC-107 NO SCALE

**Légende:**
**Indentification pour les borniers triples étages (ou relais slim)**

XXX / XXX — Étage inférieure de la borne
XXX / XXX — Étage supérieur de la borne

**Légende:**
**Indentification pour les borniers triples étages (ou relais slim)**

XXX / XXX / XXX — Étage inférieure de la borne
XXX / XXX / XXX — Étage centrale de la borne
XXX / XXX / XXX — Étage supérieur de la borne

| | | | |
|---|---|---|---|
| Dessiné Par / Drawn By: O. Chalifoux-Lauzon | Projet / Project: WWTP Upgrade | Client / Customer: City of Iqaluit | Entreprises L.M. inc. |
| Préparé Par / Prepared By: O. Chalifoux-Lauzon | ---- | ---- | |
| Dernière maj / Last update: 18 juin 2018 | Dessin De / Drawing Of: Terminals (2/2) | Page / de: 05 / 21 | Projet / Project: Pxxxxxx / xxxxxx |
| | | | Dessin N° / Drawing N°: CPL900.DWG |

3006 Ste-Catherine est, Montréal, Québec, H1W 2B8
Tél: (514) 523-2831 / 1-800-265-2831, Fax: 514-521-2526

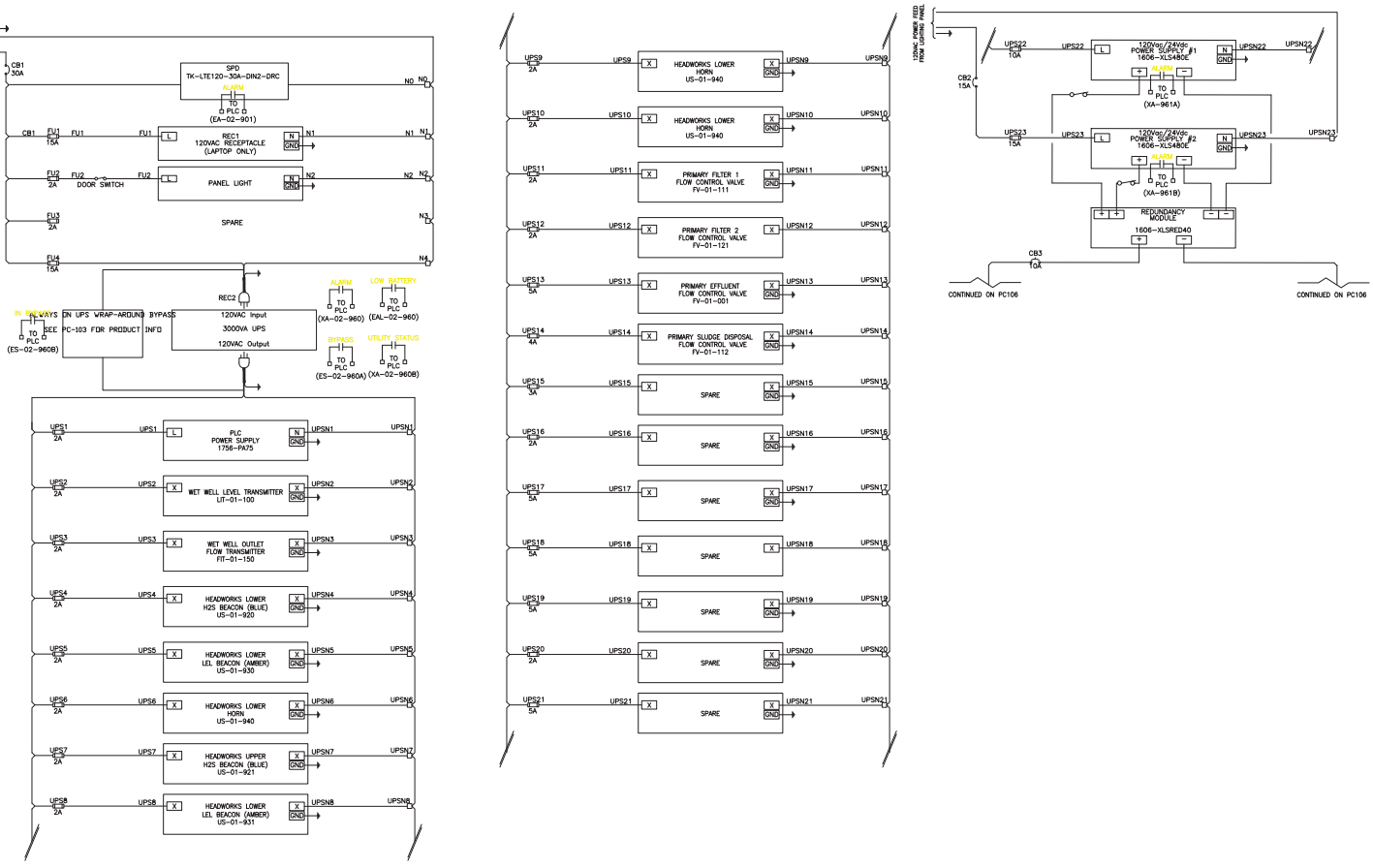


| | | | |
|---|---|---|---|
| Dessiné Par / Drawn By: O. Chalifoux-Lauzon | Projet / Project: WWTP Upgrade | Client / Customer: City of Iqaluit | Entreprises L.M. inc |
| Préparé Par / Prepared By: O. Chalifoux-Lauzon | ---- | ---- | |
| | Dessin De / Drawing Of: Controls (1/2) | Page / de: 07 / 21 | Projet / Project: Pxxxxxx / xxxxxx |
| Dernière maj / Last update: 18 juin 2018 | | | Dessin N° / Drawing N°: CPL900.DWG |

3006 Ste-Catherine est, Montréal, Québec, H1W 2B8
Tél: (514) 523-2831 / 1-800-265-2831, Fax: 514-521-2526

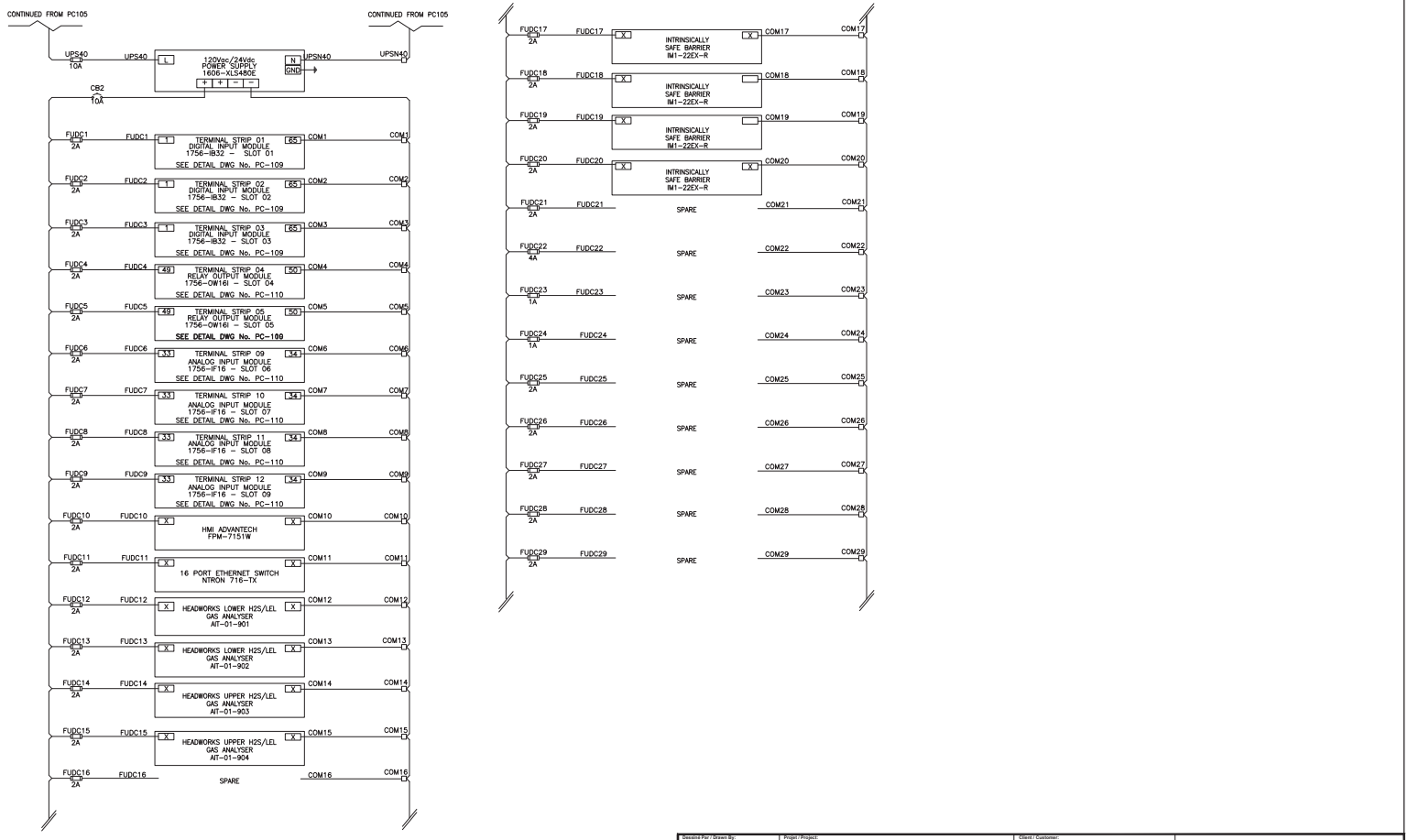


| | | | |
|---|---|---|---|
| Dessiné Par / Drawn By: O. Chalifoux-Lauzon | Projet / Project: WWTP Upgrade | Client / Customer: City of Iqaluit | Entreprises L.M. inc. |
| Préparé Par / Prepared By: O. Chalifoux-Lauzon | ---- | Projet / Project: Pxxxxxx / xxxxxx | 3006 Ste-Catherine est, Montréal, Québec, H1W 2B8 |
| Dernière maj / Last update: 18 juin 2018 | Dessin De / Drawing Of: Controls (2/2) — Page / de: 08 / 21 | Dessin N° / Drawing N°: CPL900.DWG | Tél: (514) 523-2831 / 1-800-265-2831, Fax: 514-521-2526 |

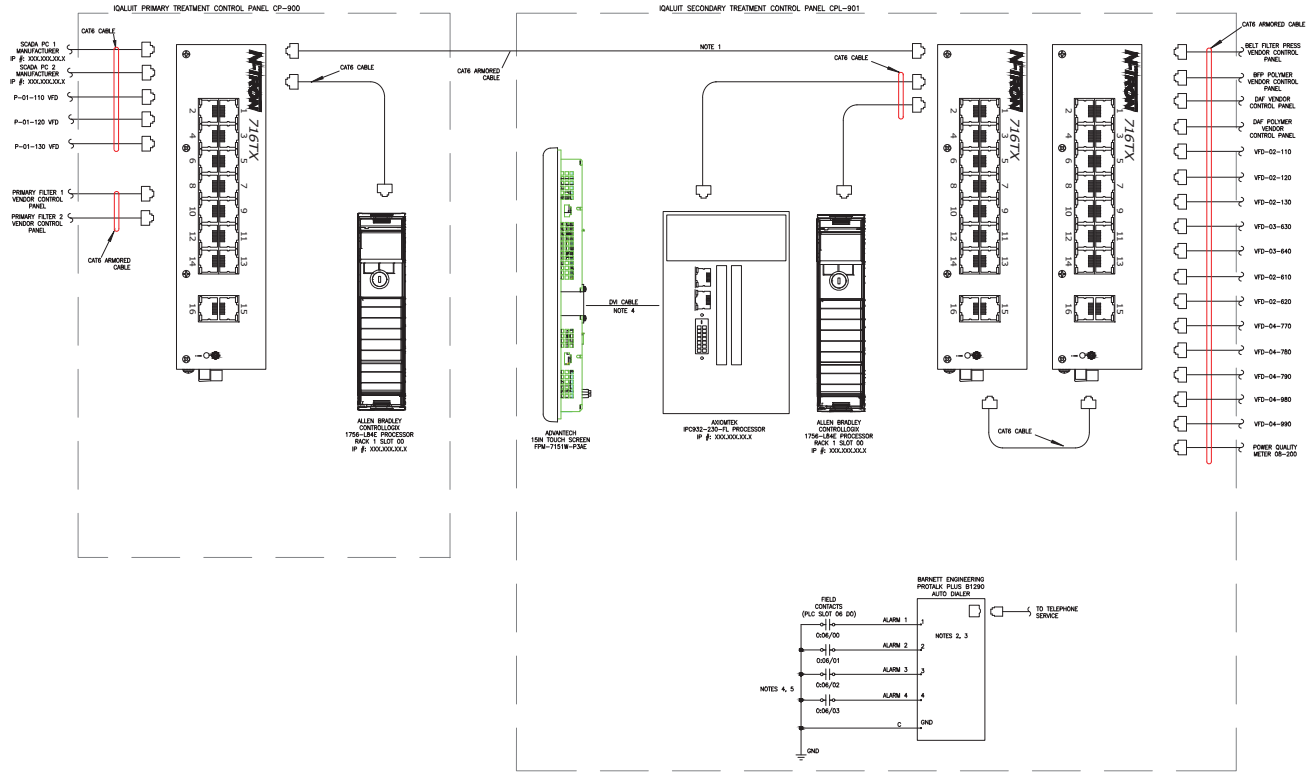


| | | | |
|---|---|---|---|
| Dessiné Par / Drawn By: O. Chalifoux-Lauzon | Projet / Project: WWTP Upgrade | Client / Customer: City of Iqaluit | Entreprises L.M. inc |
| Préparé Par / Prepared By: O. Chalifoux-Lauzon | ---- | ---- | 3006 Ste-Catherine est, Montréal, Québec, H1W 2B8 |
| Dernière maj / Last update: 18 juin 2018 | Dessin De / Drawing Of: Communication | Page / de: 09 / 21 | Projet / Project: Pxxxxxx / xxxxxx<br>Dessin N° / Drawing N°: CPL900.DWG | Tél: (514) 523-2831 / 1-800-265-2831, Fax: 514-521-2526 |

| DESCRIPTION | PLC TAG |
|---|---|
| WET WELL LEVEL INDICATION FAULT STATUS | XA-01-100 |
| WET WELL LEVEL LOW LOW ALARM | LALL-01-111 |
| WET WELL LEVEL LOW ALARM | LAL-01-112 |
| WET WELL LEVEL HIGH ALARM | LAH-01-113 |
| WET WELL LEVEL HIGH HIGH ALARM | LAHH-01-114 |
| WET WELL P-01-110 RUN STATUS | YI-01-110 |
| WET WELL P-01-110 FAULT STATUS | XA-01-110 |
| WET WELL P-01-110 AUTO STATUS | HI-01-110 |
| WET WELL P-01-110 MOTOR FAULT | UA-01-110 |
| WET WELL P-01-110 ESD TRIGGERED | HA-01-110 |
| WET WELL OUTLET FLOW TOTALIZATION PULSE | FQI-01-150 |
| CPL-900 UPS FAULT STATUS | XA-01-960 |
| CPL-900 UPS BATTERY LOW | EAL-01-960 |
| CPL-900 UPS ON BYPASS | ES-01-960A |
| CPL-900 UPS ON UTILITY | ES-01-960B |
| CPL-900 UPS BYPASS SWITCH IN BYPASS MODE | ES-01-962 |

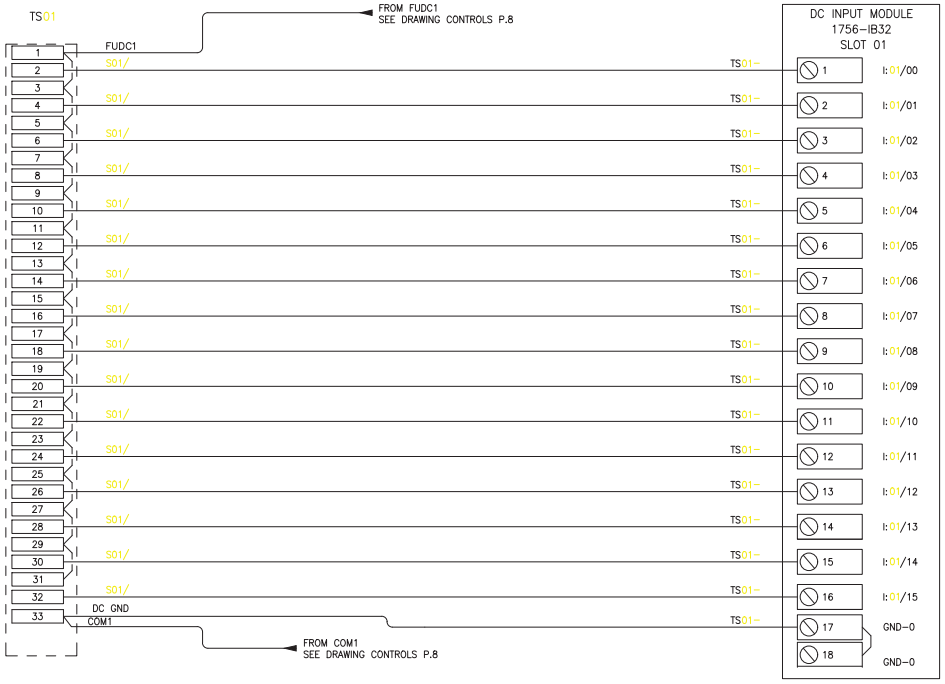


| | | | |
|---|---|---|---|
| Dessiné Par / Drawn By: O. Chalifoux-Lauzon | Projet / Project: WWTP Upgrade | Client / Customer: City of Iqaluit | Entreprises L.M. inc |
| Préparé Par / Prepared By: O. Chalifoux-Lauzon | ---- | ---- | |
| Dernière maj / Last update: 18 juin 2018 | Dessin De / Drawing Of: IO | Page / de: 10 / 21 | Projet / Project: Pxxxxxx / xxxxxx |
| | | | Dessin N° / Drawing N°: CPL900.DWG |

3006 Ste-Catherine est, Montréal, Québec, H1W 2B8
Tél: (514) 523-2831 / 1-800-265-2831, Fax: 514-521-2526

| DESCRIPTION | PLC TAG |
|---|---|
| PUMP P-01-120 RUN STATUS | YI-01-120 |
| PUMP P-01-120 FAULT STATUS | XA-01-120 |
| PUMP P-01-120 AUTO STATUS | HI-01-120 |
| PUMP P-01-120 MOTOR FAULT STATUS | UA-01-120 |
| PUMP P-01-120 ESD TRIGGERED | HA-01-120 |
| SCREEN SCRN-01-210 RUN STATUS | YI-01-210 |
| SCREEN SCRN-01-210 FAULT STATUS | XA-01-210 |
| SCREEN SCRN-01-210 LEVEL HIGH ALARM | LAH-01-210 |
| SCREEN SCRN-01-210 POWER LOSS/ESD TRIGGERED | HA-01-210 |
| DISPOSAL TRAILER MOTOR VALVE OEPN STATUS | ZSO-01-112 |
| DISPOSAL TRAILER MOTOR VALVE CLOSED STATUS | ZSC-01-112 |
| PF-01-310 INCOMING KNIFE VALVE OPEN STATUS | ZSO-01-111 |
| PF-01-310 INCOMING KNIFE VALVE CLOSED STATUS | ZSC-01-111 |
| PF-01-310 RUN STATUS | YI-01-310 |
| PF-01-310 FAULT STATUS | XA-01-310 |
| PRIMARY EFFLUENT KNIFE VALVE OPEN STATUS | ZSO-01-121 |

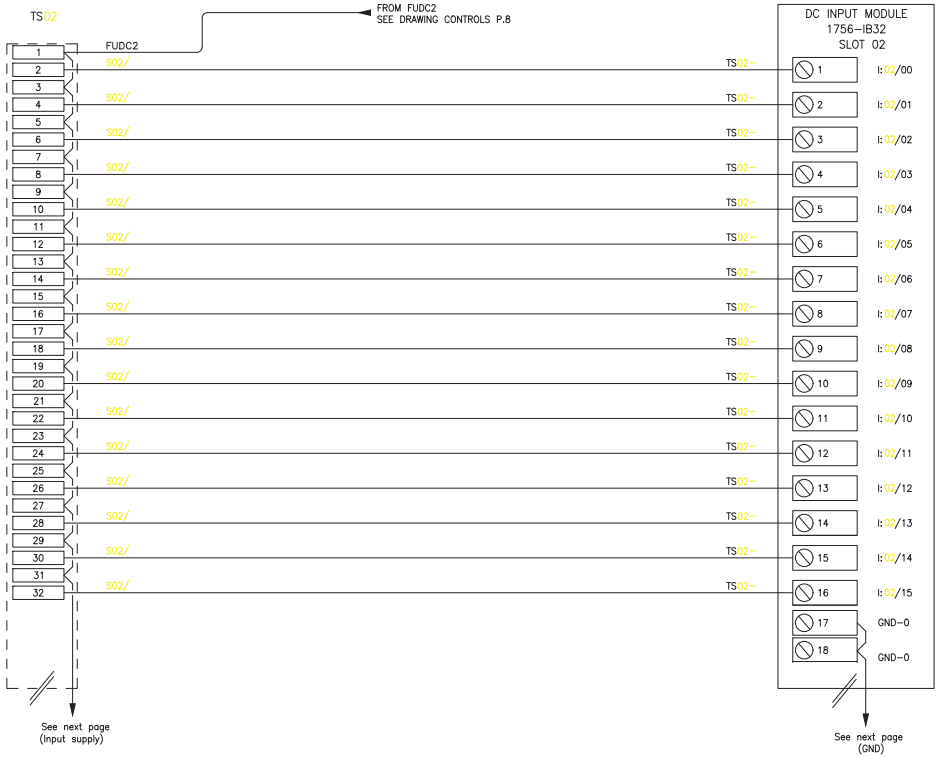


| | | | |
|---|---|---|---|
| Dessiné Par / Drawn By: O. Chalifoux-Lauzon<br>Préparé Par / Prepared By: O. Chalifoux-Lauzon<br>Dernière maj / Last update: 18 juin 2018 | Projet / Project: WWTP Upgrade<br>----<br>Dessin De / Drawing Of: IO<br>Page / de: 11 / 21 | Client / Customer: City of Iqaluit<br>----<br>Projet / Project: Pxxxxxx / xxxxxx<br>Dessin N° / Drawing N°: CPL900.DWG | Entreprises L.M. inc<br>3006 Ste-Catherine est, Montréal, Québec, H1W 2B8<br>Tél: (514) 523-2831 / 1-800-265-2831, Fax: 514-521-2526 |

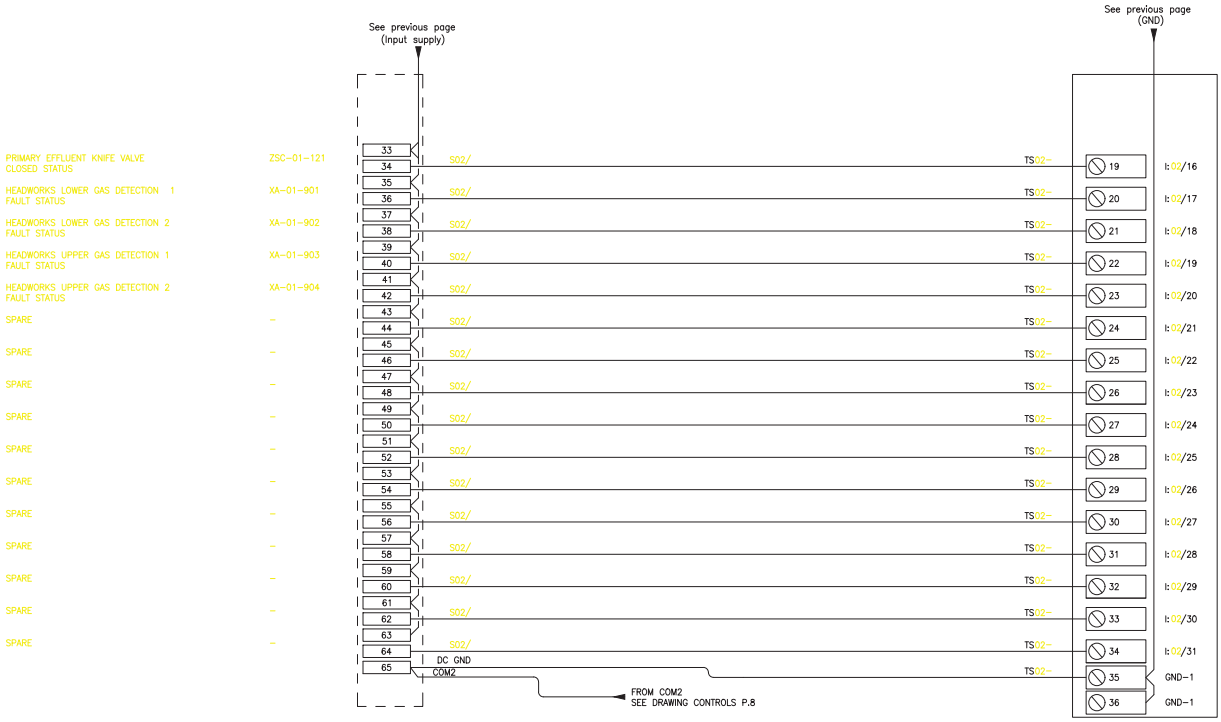
See previous page
(Input supply)
See previous page
(GND)
PRIMARY EFFLUENT KNIFE VALVE CLOSED STATUS
ZSC-01-121
HEADWORKS LOWER GAS DETECTION 1 FAULT STATUS
XA-01-901
HEADWORKS LOWER GAS DETECTION 2 FAULT STATUS
XA-01-902
HEADWORKS UPPER GAS DETECTION 1 FAULT STATUS
XA-01-903
HEADWORKS UPPER GAS DETECTION 2 FAULT STATUS
XA-01-904
SPARE
SPARE
SPARE

| DESCRIPTION | PLC TAG |
|---|---|
| PUMP P-01-130 RUN STATUS | YI-01-130 |
| PUMP P-01-130 FAULT STATUS | XA-01-130 |
| PUMP P-01-130 AUTO STATUS | HI-01-130 |
| PUMP P-01-130 MOTOR FAULT STATUS | UA-01-130 |
| PUMP P-01-130 ESD TRIGGERED | HA-01-130 |
| SCREEN SCRN-01-220 RUN STATUS | YI-01-220 |
| SCREEN SCRN-01-220 FAULT STATUS | XA-01-220 |
| SCREEN SCRN-01-220 LEVEL HIGH ALARM | LAH-01-220 |
| SCREEN SCRN-01-220 POWER LOSS/ESD TRIGGERED | HA-01-220 |
| PF-01-320 INCOMING KNIFE VALVE OPEN STATUS | ZSO-01-320 |
| PF-01-320 INCOMING KNIFE VALVE CLOSED STATUS | ZSC-01-320 |
| PF-01-320 RUN STATUS | YI-01-320 |
| PF-01-320 FAULT STATUS | XA-01-320 |
| PLC-901 DC POWER SUPPLY #1 DC VOLTAGE FAULT | XA-02-970 |
| PLC-901 DC POWER SUPPLY #2 DC VOLTAGE FAULT | XA-02-971 |
| PLC-901 SPD SURGE INDICATION | XA-02-900 |

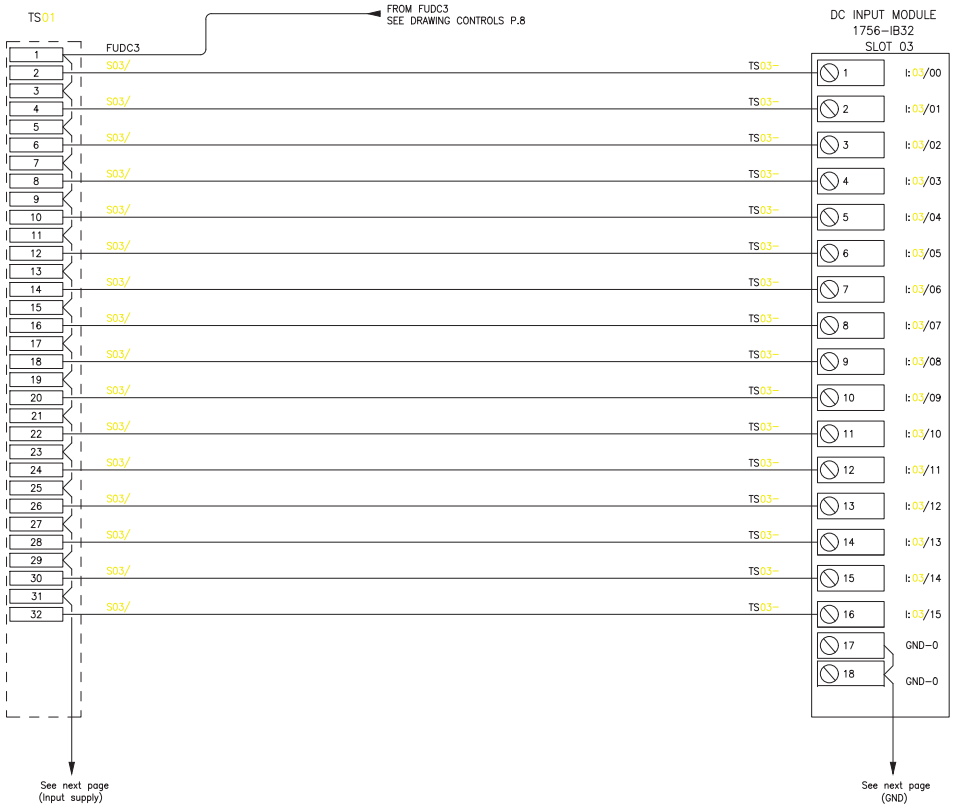


| | | | |
|---|---|---|---|
| Dessiné Par / Drawn By: O. Chalifoux-Lauzon | Projet / Project: WWTP Upgrade | Client / Customer: City of Iqaluit | Entreprises L.M. inc |
| Préparé Par / Prepared By: O. Chalifoux-Lauzon | ---- | ---- | 3006 Ste-Catherine est, Montréal, Québec, H1W 2B8 |
| Dernière maj / Last update: 18 juin 2018 | Dessin De / Drawing Of: IO | Page / de: 13 / 21 | Projet / Project: Pxxxxxx / xxxxxx |
| | | Dessin N° / Drawing N°: CPL900.DWG | Tél: (514) 523-2831 / 1-800-265-2831, Fax: 514-521-2526 |

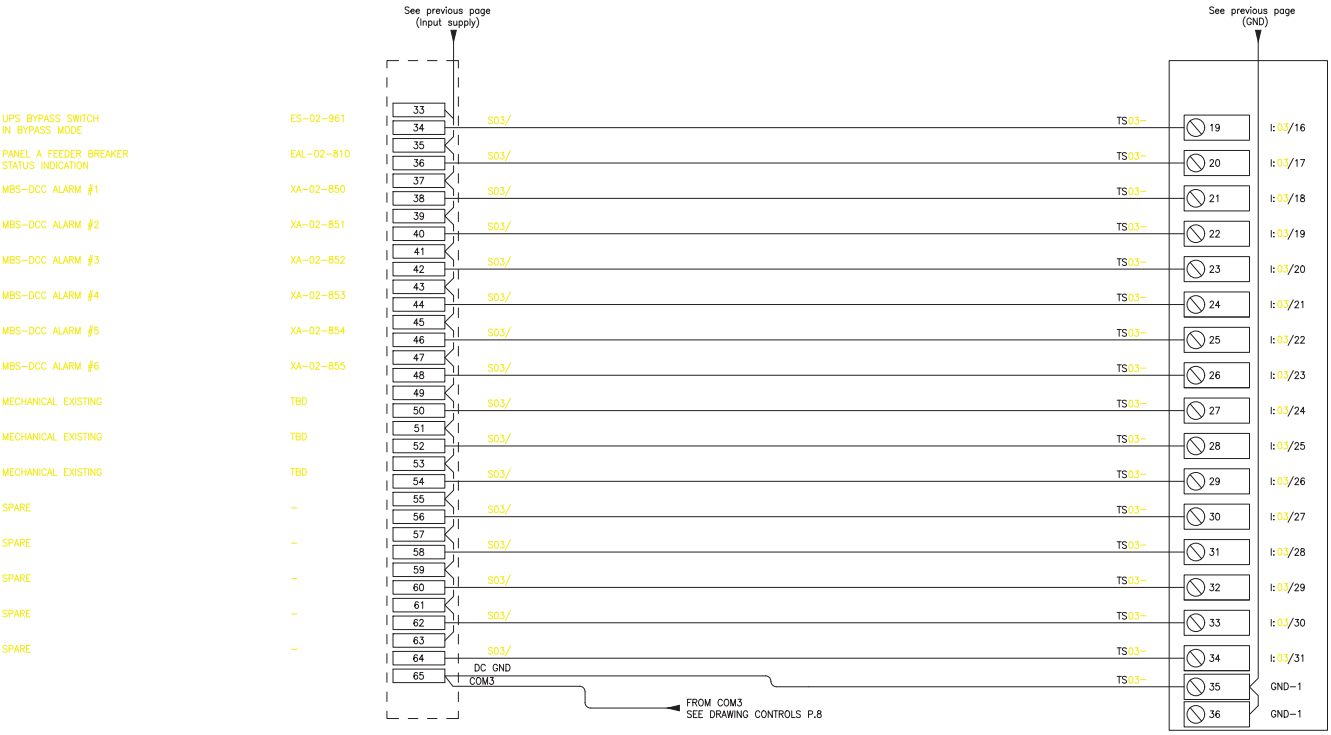


| | | | |
|---|---|---|---|
| Dessiné Par / Drawn By: O. Chalifoux-Lauzon | Projet / Project: WWTP Upgrade | Client / Customer: City of Iqaluit | Entreprises L.M. inc |
| Préparé Par / Prepared By: O. Chalifoux-Lauzon | ---- | Projet / Project: Pxxxxxx / xxxxxx | 3006 Ste-Catherine est, Montréal, Québec, H1W 2B8 |
| Dernière maj / Last update: 18 juin 2018 | Dessin De / Drawing Of: IO | Page / de: 14 / 21 | Dessin N° / Drawing N°: CPL900.DWG | Tél: (514) 523-2831 / 1-800-265-2831, Fax: 514-521-2526 |

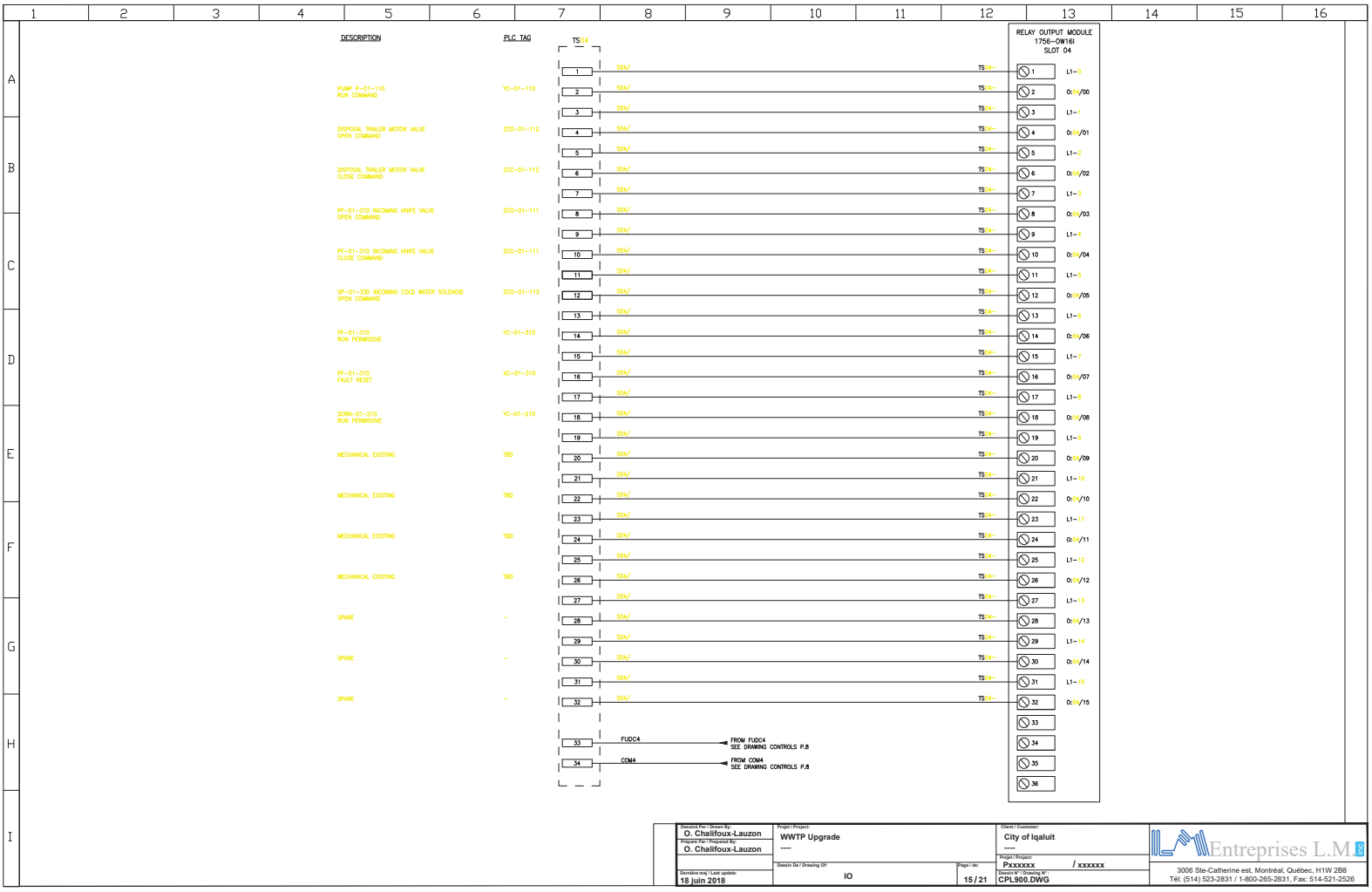


| | | | |
|---|---|---|---|
| Dessiné Par / Drawn By: O. Chalifoux-Lauzon | Projet / Project: WWTP Upgrade | Client / Customer: City of Iqaluit | Entreprises L.M. inc |
| Préparé Par / Prepared By: O. Chalifoux-Lauzon | ---- | Projet / Project: Pxxxxxx / xxxxxx | 3006 Ste-Catherine est, Montréal, Québec, H1W 2B8 |
| Dernière maj / Last update: 18 juin 2018 | Dessin De / Drawing Of: IO | Page / de: 15 / 21 | Dessin N° / Drawing N°: CPL900.DWG | Tél: (514) 523-2831 / 1-800-265-2831, Fax: 514-521-2526 |

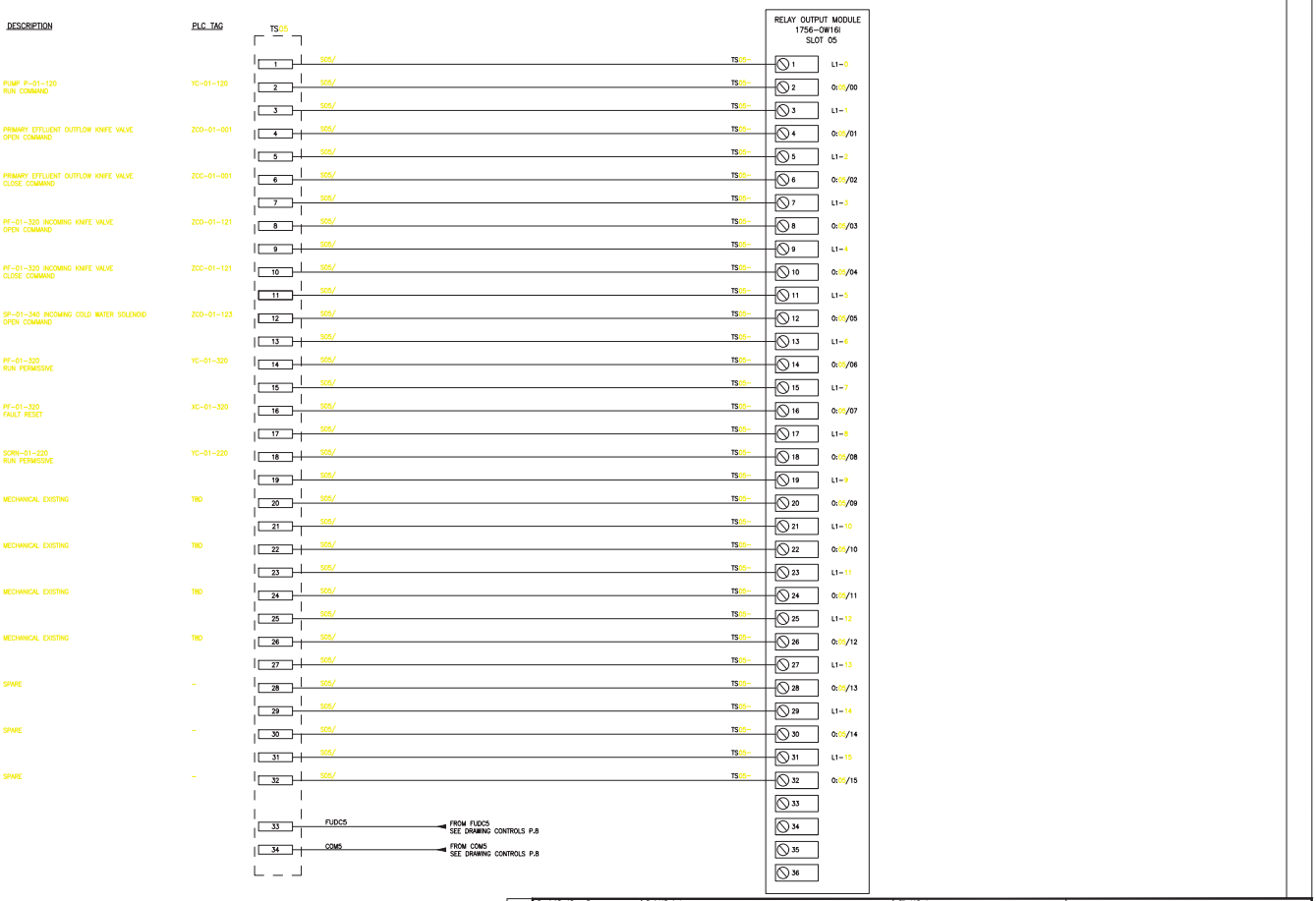


| | | | |
|---|---|---|---|
| Dessiné Par / Drawn By: O. Chalifoux-Lauzon | Projet / Project: WWTP Upgrade | Client / Customer: City of Iqaluit | Entreprises L.M. inc. |
| Préparé Par / Prepared By: O. Chalifoux-Lauzon | ---- | ---- | |
| | Dessin De / Drawing Of: IO | Page / de: 16 / 21 | Projet / Project: Pxxxxxx / xxxxxx |
| Dernière maj / Last update: 18 juin 2018 | | | Dessin N° / Drawing N°: CPL900.DWG |

3006 Ste-Catherine est, Montréal, Québec, H1W 2B8
Tél: (514) 523-2831 / 1-800-265-2831, Fax: 514-521-2526

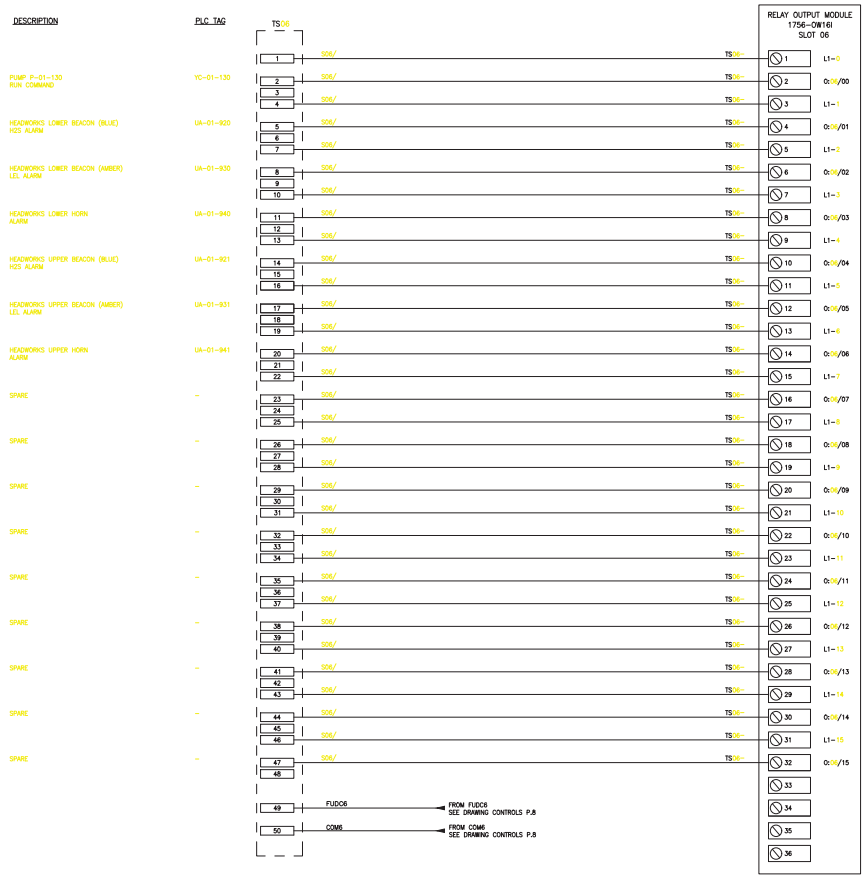


| | | | |
|---|---|---|---|
| Dessiné Par / Drawn By: O. Chalifoux-Lauzon | Projet / Project: WWTP Upgrade ---- | Client / Customer: City of Iqaluit ---- | Entreprises L.M. inc. |
| Préparé Par / Prepared By: O. Chalifoux-Lauzon | | Projet / Project: Pxxxxxx / xxxxxx | 3006 Ste-Catherine est, Montréal, Québec, H1W 2B8 |
| Dernière maj / Last update: 18 juin 2018 | Dessin De / Drawing Of: IO | Page / de: 17 / 21 | Dessin N° / Drawing N°: CPL900.DWG | Tél: (514) 523-2831 / 1-800-265-2831, Fax: 514-521-2526 |

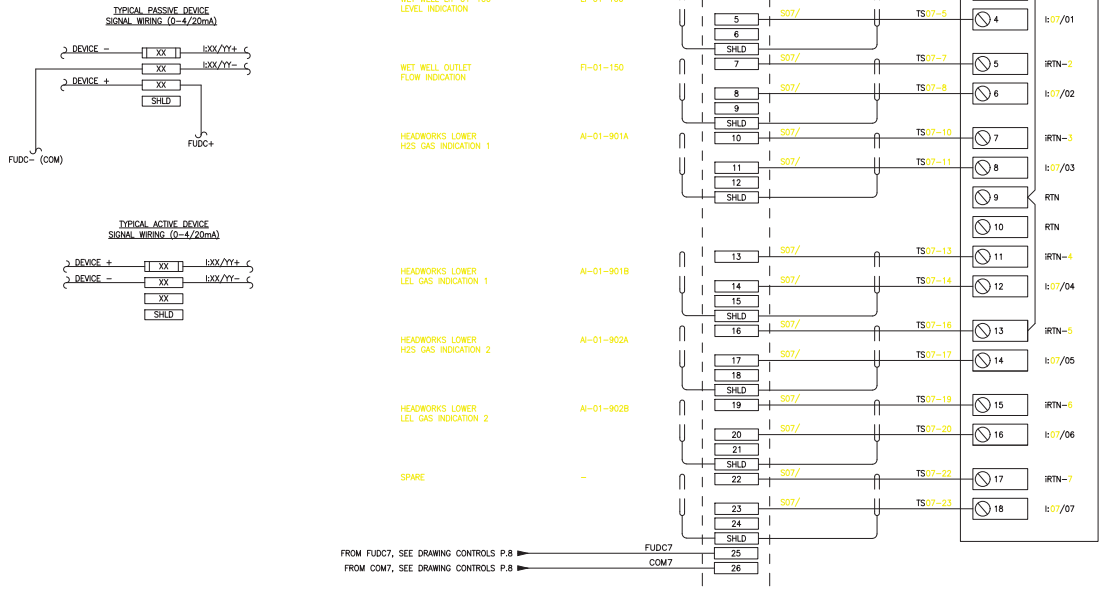


| | | | |
|---|---|---|---|
| Dessiné Par / Drawn By: O. Chalifoux-Lauzon | Projet / Project: WWTP Upgrade | Client / Customer: City of Iqaluit | Entreprises L.M. inc |
| Préparé Par / Prepared By: O. Chalifoux-Lauzon | ---- | Projet / Project: Pxxxxxx / xxxxxx | 3006 Ste-Catherine est, Montréal, Québec, H1W 2B8 |
| Dernière maj / Last update: 18 juin 2018 | Dessin De / Drawing Of: IO | Page / de: 18 / 21 | Dessin N° / Drawing N°: CPL900.DWG | Tél: (514) 523-2831 / 1-800-265-2831, Fax: 514-521-2526 |

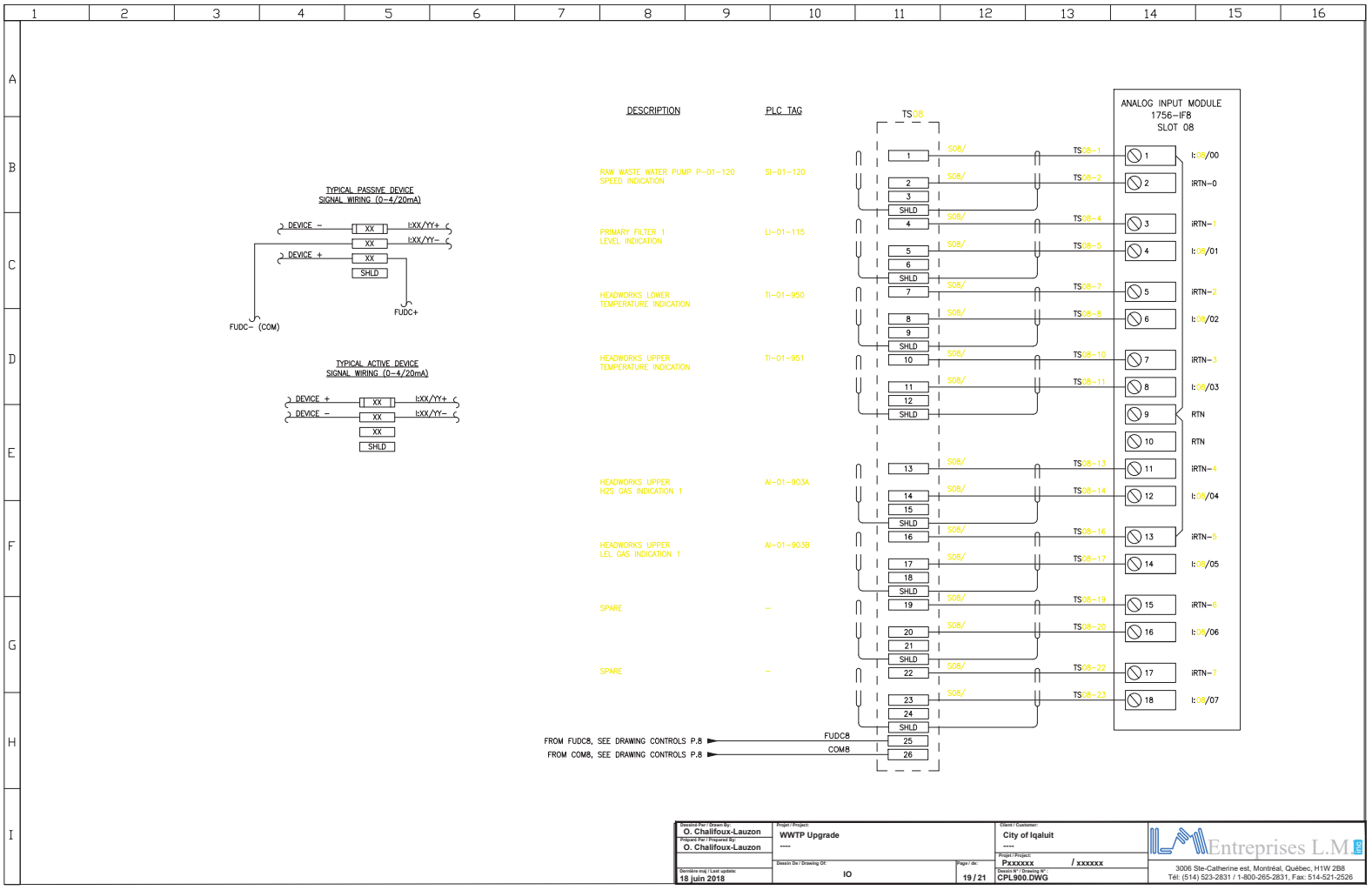


| | | | |
|---|---|---|---|
| Dessiné Par / Drawn By: O. Chalifoux-Lauzon | Projet / Project: WWTP Upgrade | Client / Customer: City of Iqaluit | Entreprises L.M. inc |
| Préparé Par / Prepared By: O. Chalifoux-Lauzon | ---- | ---- | 3006 Ste-Catherine est, Montréal, Québec, H1W 2B8 |
| Dernière maj / Last update: 18 juin 2018 | Dessin De / Drawing Of: IO | Page / de: 19 / 21 | Tél: (514) 523-2831 / 1-800-265-2831, Fax: 514-521-2526 |
| | | Projet / Project: Pxxxxxx / xxxxxx | |
| | | Dessin N° / Drawing N°: CPL900.DWG | |

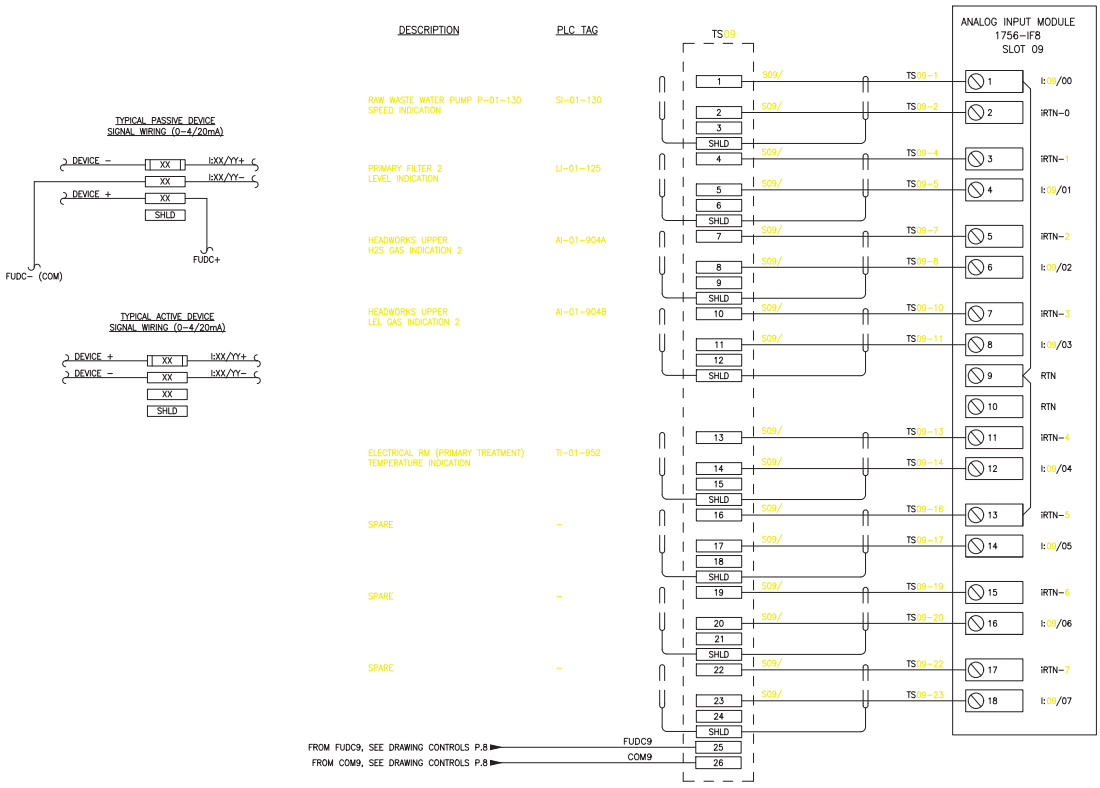


| | | | |
|---|---|---|---|
| Dessiné Par / Drawn By: O. Chalifoux-Lauzon | Projet / Project: WWTP Upgrade | Client / Customer: City of Iqaluit | Entreprises L.M. inc |
| Préparé Par / Prepared By: O. Chalifoux-Lauzon | ---- | Projet / Project: Pxxxxxx / xxxxxx | 3006 Ste-Catherine est, Montréal, Québec, H1W 2B8 |
| Dernière maj / Last update: 18 juin 2018 | Dessin De / Drawing Of: IO | Page / de: 20 / 21 | Dessin N° / Drawing N°: CPL900.DWG | Tél: (514) 523-2831 / 1-800-265-2831, Fax: 514-521-2526 |

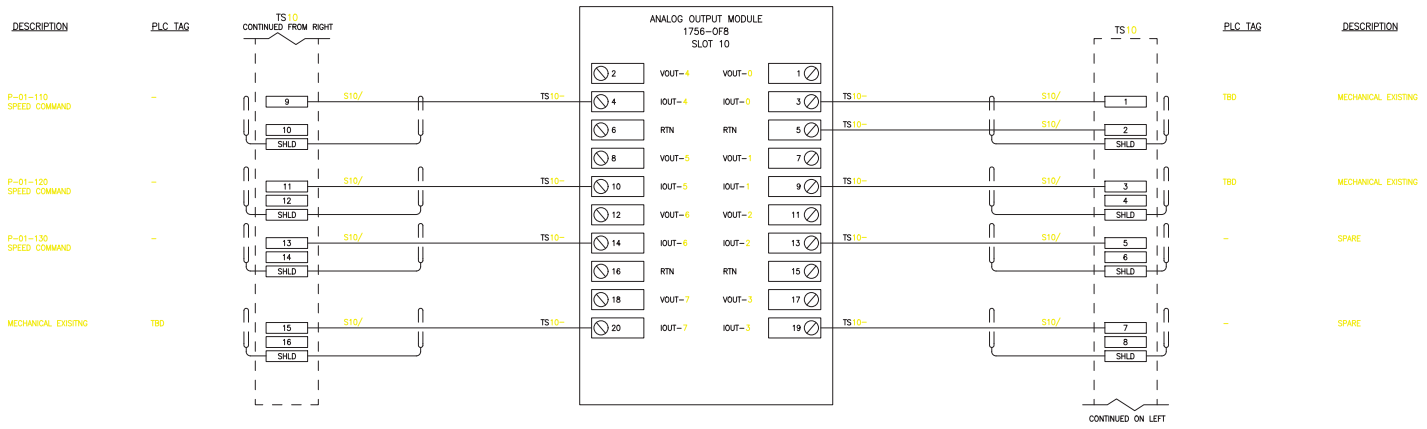


| | | | |
|---|---|---|---|
| Dessiné Par / Drawn By: O. Chalifoux-Lauzon | Projet / Project: WWTP Upgrade | Client / Customer: City of Iqaluit | Entreprises L.M. inc |
| Préparé Par / Prepared By: O. Chalifoux-Lauzon | ---- | Projet / Project: Pxxxxxx / xxxxxx | 3006 Ste-Catherine est, Montréal, Québec, H1W 2B8 |
| Dernière maj / Last update: 18 juin 2018 | Dessin De / Drawing Of: IO | Page / de: 21 / 21 | Dessin N° / Drawing N°: CPL900.DWG | Tél: (514) 523-2831 / 1-800-265-2831, Fax: 514-521-2526 |

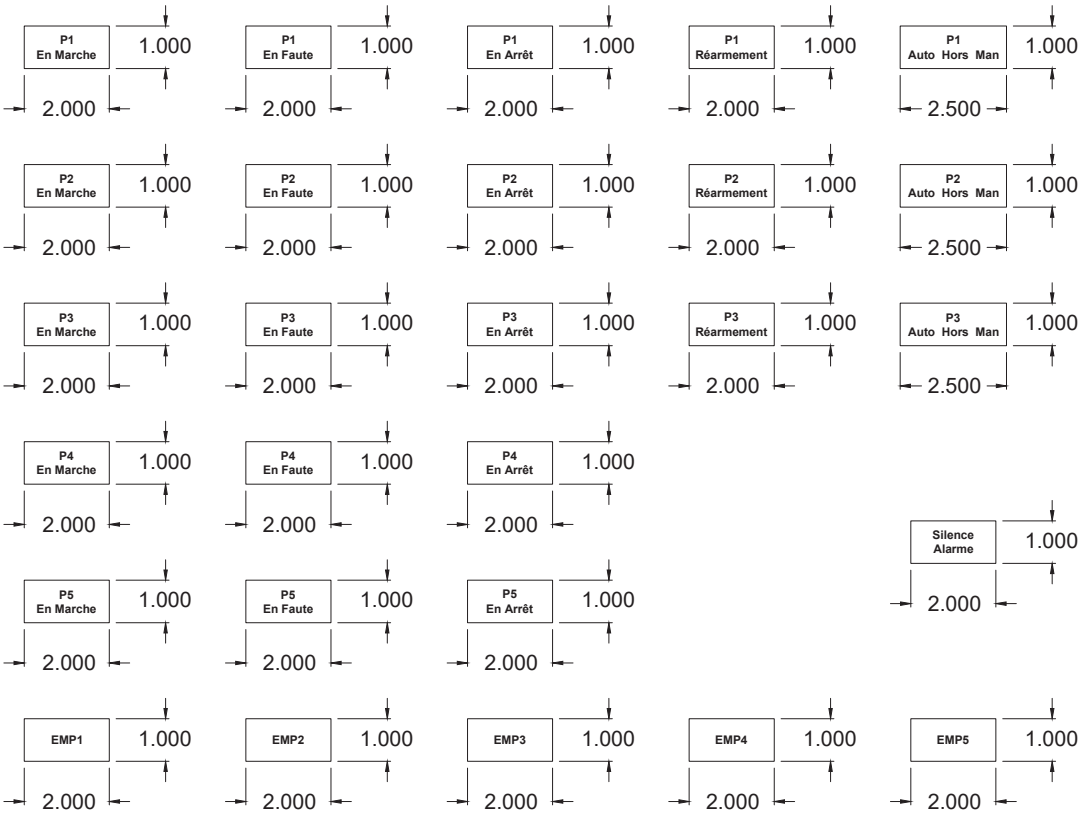


**Légende:**

**Couleur des plaques signalétiques: Blanc**
**Texte gravé: Noir**
**Hauteur du texte: 1/4"**

| | | | |
|---|---|---|---|
| Dessiné Par / Drawn By: O. Chalifoux-Lauzon | Projet / Project: WWTP Upgrade | Client / Customer: City of Iqaluit | Entreprises L.M. inc. |
| Préparé Par / Prepared By: O. Chalifoux-Lauzon | ---- | ---- | 3006 Ste-Catherine est, Montréal, Québec, H1W 2B8 |
| Dernière maj / Last update: 18 juin 2018 | Dessin De / Drawing Of: Étiquettes | Page / de: 27 / 21 | Projet / Project: Pxxxxxx / xxxxxx |
| | | Dessin N° / Drawing N°: CPL900.DWG | Tél: (514) 523-2831 / 1-800-265-2831, Fax: 514-521-2526 |

## Enclosure lights - Series 880 LED

**The 880 LED** are designed to illuminate the interiors of small to large enclosures with the very low power consumption that the LED lights provide. The light bars are motion activated using the built-in motion sensor that eliminates the need for a door switch. The time the LED lights stay on, without movement, is adjustable at 3, 5 or 10 minutes. The light bars are made from extruded aluminum and feature an integrated 120/240 Volts, 11.5 Amps USA/Canada standard receptacle, so that electrical devices (e.g. power tools) can be easily plugged in when needed. A 5 foot cord with an USA/Canada 120/240 Volts plug is provided. The LED bars come complete with a set of 2 mounting brackets (880 LEDB) that are easily clipped along the length of the LED bar and can be fixed to the enclosure with the included M5 screws or optional right angle mounting bracket.



| CATALOG NUMBER | A | QTY LEDS | WATTS | SHIP WGHT LBS. |
|---|---|---|---|---|
| 880 LED12 | 12” | 24 | 3 | 8 |
| 880 LED18 | 18” | 36 | 3 | 9 |
| 880 LED24 | 24” | 48 | 6 | 10 |
| 880 LED36 | 36” | 64 | 6 | 12 |

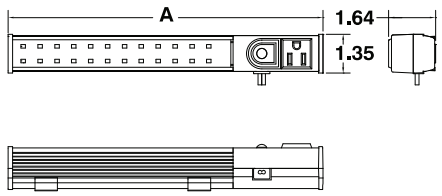


## LED bar mounting bracket

**The 880 LEDB** mounting brackets are used for holding the 880 LED light in the enclosure. The light has grooves along the sides to receive the clipping brackets. The brackets can be fixed to the enclosure with the included M5 screws. (Sold in pairs)



| CATALOG NUMBER | PIECES | SHIP WGHT LBS. |
|---|---|---|
| 880 LEDB | 2 | 1 |

## Right angle mounting bracket

**The 880 LEDRB** are designed to fasten the 880 LED by its mounting brackets to any type of enclosures.
Sold in pairs and supplied with installation hardware.



| CATALOG NUMBER | PIECES | SHIP WGHT LBS. |
|---|---|---|
| 880 LEDRB | 2 | 1 |

Data subject to change without notice.

# Remote door switch - Series FLRDS

**The FLRDS series remote door switch** can be applied in the ES family (881 FLRDS), in the Mtrx family (886 FLRDS), in the 5412 DDS cabinet and the 9000 series cabinets (889 FLRDS). It is a cost effective solution to power on/off the light within an enclosure. The bracket is designed to operate on all Mtrx doors and side door, with or without stiffeners. Consists of switch, steel bracket and hardware.



**For use with 'ES' series enclosures:**

| CATALOG NUMBER | SHIP WGHT LBS. |
|---|---|
| 881 FLRDS | 1 |

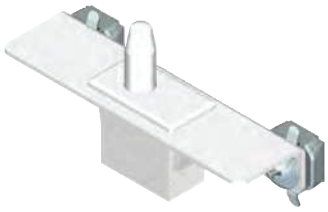

**For use with Mtrx modular cabinets:**

| CATALOG NUMBER | SHIP WGHT LBS. |
|---|---|
| 886 FLRDS | 1 |

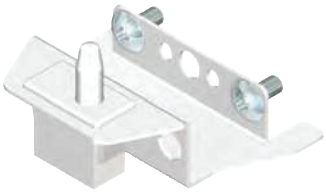

**For use with 'DDS' double door cabinets and 9000 series cabinets:**

| CATALOG NUMBER | SHIP WGHT LBS. |
|---|---|
| 889 FLRDS | 1 |

# Remote door switch - Series RDS

**The 886 RDS remote door switch** is a robust solution to power on/off a light within an enclosure. The switch is designed to operate on all Mtrx doors and side doors, with or without stiffeners. Consists of switch, mounting bracket and hardware.



**For use with Mtrx modular cabinets:**

| CATALOG NUMBER | SHIP WGHT LBS. |
|---|---|
| 886 RDS | 1 |

Data subject to change without notice.

REVIEWED BY CONTRACTOR

Kudlik Construction Ltd.

NAME: Sandra Rousseau P.Eng

DATE: Jun 27, 2018

NORCLAIR
MÉCANIQUE DE PROCÉDÉ

# TDS AND SHOP DRAWINGS

**DA-IC-04-**Level switch

**Date :** 2018-06-27

| **INFORMATION** | |
|---|---|
| Project : **WASTEWATER PLANT - IQALUIT** | |
| Client : Kudlik Construction Ltd.<br>To Sandra Rousseau P.Eng./ Project Manager | Project number : **2018-062** |
| Contractor : Norclair inc. | Project number Norclair : **P1039** |
| Address : 1100, Montee Masson, Laval, QC, Canada H7E 4P2 | |
| Project Manager : Steven Wieland | E-mail: swieland@norclair.ca |
| Phone: 450-688-4012 # 708 | Cell.: 514-608-0619 |

| **Information, subcontractor or supplier** | |
|---|---|
| Sub supplier : Xylem | |
| Contact : Hugo Chartier | Phone : 450-688-4012 ext. 706 |

| **Information on the equipment or the proposed materials** | |
|---|---|
| Speciality : Instruments and controls | |
| Equipment :<br>Level switch | |
| Drawing reference : | |
| Specification reference : 40 05 23 | Division : |
| Article : | Number Page : 2 |

## CONSULTANT APPROVAL

No comments.

STANTEC PROJECT #: 110126045

SUBMITTAL # DA-IC-04 R0 (2018-06-27)

This review by Stantec is for general conformance with the design concept of Stantec's design of the:

- ☐ Architectural
- ☐ Structural
- ☐ Mechanical
- ☑ Electrical
- ☑ Other Instrumentation

component(s) only and does not mean that Stantec has verified or approves the shop drawing(s). The Contractor remains solely responsible for the shop drawing(s) and this review by Stantec does not relieve the Contractor of the Contractor's responsibility for errors or omissions in the shop drawing(s) or for meeting all requirements of the contract documents. This review does not mean that Stantec approves the detailed design inherent in the shop drawing, responsibility for which shall remain with the Contractor submitting same, nor does this review mean that Stantec accepts any deviation of the shop drawing(s) from the contract documents. The Contractor is responsible for confirming all dimensions and correlating them at the job site, for all construction means, methods and techniques, and for coordination of construction work of all trades, including coordination of all shop drawings.

Stantec

- ☑ REVIEWED
- ☐ REVIEWED, AS NOTED
- ☐ REVISE AND RESUBMIT
- ☐ NOT REVIEWED

DATE 2018-JUN-27

BY David Hutchison, P.Eng.

1100, Montée Masson
Laval, QC, Canada
H7E 4P2

Phone. : 450-688-4012
Fax : 450-661-6341
E-Mail : info@norclair.ca
www.norclair.ca

| xylem | Station Equipment<br>ENM-10 Level Regulator<br>P/N 582 88 XX | DOCUMENT NO.<br>ES 6.1.1<br>SUPERSEDES: 11/2010 — ISSUED: 02/2013 |
|---|---|---|

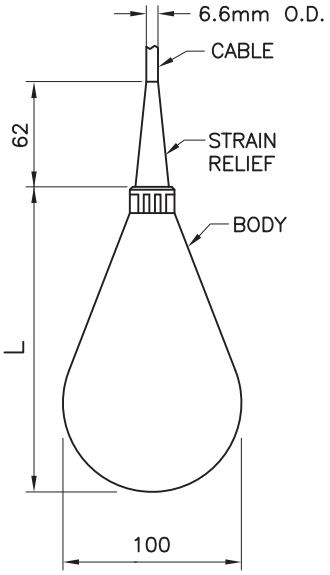


## DESCRIPTION:

THE ENM–10 CONTAINS A MECHANICAL SWITCH IN A SEALED PLASTIC CASING. IT IS USED TO ACTIVATE ELECTRICAL DEVICES, SUCH AS PUMPS AND ALARMS, BASED ON THE LEVEL OF A LIQUID.

## OPERATION:

THE ENM–10 LEVEL SENSOR IS SUSPENDED FROM ITS OWN CABLE. WHEN LIQUID REACHES THE SENSOR IT TILTS AND AN ECCENTRIC WEIGHT ACTIVATES A MECHANICAL SWITCH. THE ENM–10 DOES NOT FLOAT, BUT REMAINS SUSPENDED IN THE LIQUID.

## MATERIALS:

BODY: POLYPROPYLENE (GREY)
STRAIN RELIEF: EPDM RUBBER
CABLE: SEE TABLE
WEIGHT: ZINC

Project: Iqaluit WWTP Upgrade
Our Ref: 18-25-0213

## OPERATING PARAMETERS:

AMBIENT TEMPERATURE RANGES: 0° TO 60°C.

ELECTRICAL: CONDUCTORS: QTY. 3, 0.75mm DIA. (#19AWG)
INTERRUPTING CAPACITY OF MICRO SWITCH: AC RESISTIVE LOAD, 250V, 10A.
AC INDUCTIVE LOAD, 250V, 3A.(COSø=0.5)
DC 30V,5A

* WITH GOLD PLATED MICRO SWITCH: SAME AS ABOVE EXCEPT DC 24V 10mA

CSA APPROVED: LR 24026–6




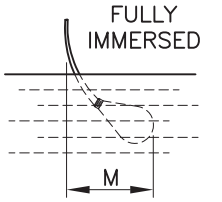


SENSOR POSITION

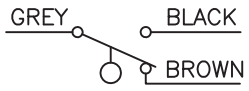


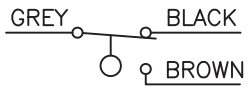


SWITCH POSITION

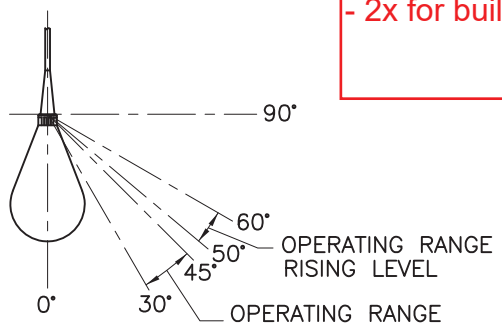


- 4x for lift station
- 2x for building sump

## SELECTION CHART

| SPECIFIC GRAVITY | CABLE LENGTH meter | BODY LENGTH (L) mm | (M) MINIMUM FOR GOOD OPERATION | P/N N.B.R./P.V.C. GREY CABLE | P/N P.V.C. GREY CABLE | P/N P.V.C. RED CABLE | WEIGHT kg. | |
|---|---|---|---|---|---|---|---|---|
| 0.65 – 0.80 | 20 | 194 | 250 | 582 88 09 | 582 88 18 | N/A | 2.0 | |
| 0.80 – 0.95 | 20 | 177 | 240 | 582 88 10 | 582 88 19 | N/A | 2.0 | |
| 0.95 – 1.10 | 6 | 163 | 225 | 582 88 11 | 582 88 20 | 582 88 55 | 1.2 | |
| 0.95 – 1.10 | 13 | 162 | 225 | 582 88 12 | 582 88 21 | 582 88 56 | 1.6 | |
| 0.95 – 1.10 | 20 | 162 | 225 | 582 88 13 | 582 88 22 | 582 88 57 | 2.0 | * |
| 0.95 – 1.10 | 30 | 162 | 225 | 582 88 36 | 582 88 82 | N/A | 3.0 | |
| 0.95 – 1.10 | 50 | 162 | 225 | 582 88 37 | 582 88 83 | N/A | 4.0 | |
| 0.95 – 1.10 | 100 | 162 | 225 | 582 88 38 | N/A | N/A | 7.0 | |
| 0.95 – 1.10 | 150 | 162 | 225 | 582 88 39 | N/A | N/A | 10.0 | |
| 1.05 – 1.20 | 20 | 142 | 205 | 582 88 14 | 582 88 23 | N/A | 2.0 | |
| 1.20 – 1.30 | 20 | 133 | 200 | 582 88 15 | 582 88 24 | N/A | 2.0 | |
| 1.30 – 1.40 | 20 | 130 | 195 | 582 88 16 | 582 88 25 | N/A | 2.0 | |
| 1.40 – 1.50 | 20 | 126 | 195 | 582 88 17 | 582 88 26 | N/A | 2.0 | |

* 594 79 20 WITH GOLD PLATED CONTACT IS DESIGN FOR LOW CURRENT, SLOW MOVEMENTS AND OIL.

N/A= NON AVALABLE

DIMENSIONS ARE IN mm



Qty: (6) Level Regulator c/w 30M of cable

REVIEWED BY CONTRACTOR

Kudlik Construction Ltd.

NAME: Sandra Rousseau P.Eng

DATE: Jul 18, 2018

NORCLAIR
MÉCANIQUE DE PROCÉDÉ

# TDS AND SHOP DRAWINGS

**DA-IC-05R2 – (Color Printer)** **Date :** 2018-07-18

| INFORMATION | |
|---|---|
| Project : **WASTEWATER PLANT - IQALUIT** | |
| Client : Kudlik Construction Ltd.<br>To Sandra Rousseau P.Eng./ Project Manager | Project number : **2018-062** |
| Contractor : Norclair inc. | Project number Norclair : **P1039** |
| Address : 1100, Montee Masson, Laval, QC, Canada H7E 4P2 | |
| Project Manager : Dominic Papineau | E-mail: dpapineau@norclair.ca |
| Phone: 450-688-4012 # 720 | Cell.: 514-409-1832 |

| Information, subcontractor or supplier | |
|---|---|
| Sub supplier : Entreprises L.M. | |
| Contact : Marion Fleury | Phone : (514) 521-0882 |

| Information on the equipment | |
|---|---|
| Speciality : **Instrumentation and Control** | |
| Equipment : **Color** Printer | |
| Drawing reference : | |
| Specification reference : **47 10 02** (Page 02 / XX) | Division : |
| Article : | Number of pages: 9 |

## CONSULTANT APPROVAL

Provide spare toner cartridge in addition to included toner
Provide all necessary cables for connecting PCs via WWTP network

STANTEC PROJECT #: 110126045

SUBMITTAL # DA-IC-05R2 (2018-07-18)

This review by Stantec is for general conformance with the design concept of Stantec's design of the:

☐ Architectural ☐ Electrical
☐ Structural ☐ Other
☐ Mechanical

component(s) only and does not mean that Stantec has verified or approves the shop drawing(s). The Contractor remains solely responsible for the shop drawing(s) and this review by Stantec does not relieve the Contractor of the Contractor's responsibility for errors or omissions in the shop drawing(s) or for meeting all requirements of the contract documents. This review does not mean that Stantec approves the detailed design inherent in the shop drawing, responsibility for which shall remain with the Contractor submitting same, nor does this review mean that Stantec accepts any deviation of the shop drawing(s) from the contract documents. The Contractor is responsible for confirming all dimensions and correlating them at the job site, for all construction means, methods and techniques, and for coordination of construction work of all trades, including coordination of all shop drawings.

Stantec

☐ REVIEWED

☑ REVIEWED, AS NOTED

☐ REVISE AND RESUBMIT

☐ NOT REVIEWED

DATE 2018-JUL-20

BY David Hutchison, P.Eng.

1100, Montée Masson
Laval, QC, Canada
H7E 4P2

Phone. : 450-688-4012
Fax : 450-661-6341
E-Mail : info@norclair.ca
www.norclair.ca

# Xerox® WorkCentre® 6515 Color Multifunction Printer



| System Specifications | WorkCentre 6515N | WorkCentre 6515DN | WorkCentre 6515DNI |
|---|---|---|---|
| **One-sided Speed**<br>8.5 x 11 in.<br>8.5 x 14 in. / 216 x 356 mm<br>A4 / 210 x 297 mm | Up to 30 ppm Color and Black and White<br>Up to 24 ppm Color and Black and White<br>Up to 28 ppm Color and Black and White | | |
| **Two-sided Speed**<br>8.5 x 11 in.<br>8.5 x 14 in. / 216 x 356 mm<br>A4 / 210 x 297 mm | NA | Up to 18 ppm Color and Black and White<br>Up to 17 ppm Color and Black and White<br>Up to 19 ppm Color and Black and White | |
| **Monthly Duty Cycle**[1] | Up to 50,000 pages / month | | |
| **Recommended Average Monthly Print Volume**[2] | Up to 3,000 pages | | |
| **Processor** | 1.05 GHz | | |
| **Memory** | 2 GB | | |
| **Connectivity** | 10/100/1000Base-T Ethernet<br>High-Speed USB 3.0 | | 10/100/1000Base-T Ethernet<br>High-Speed USB 3.0<br>Wi-Fi 802.11n<br>Wi-Fi Direct® |
| **Paper Handling** | | | |
| **Document Feeder** | | | |
| **Capacity**[3] | Single-pass Duplex Automatic Document Feeder (DADF): 50 sheets | | |
| **Sizes** | Custom Sizes: 5.5 x 5.5 in. to 8.5 x 14 in. / 139.7 x 139.7 mm to 216 x 356 mm | | |
| **Weights** | 16 lb. bond to 45 lb. cover / 60 to 125 gsm | | |
| **Bypass Tray** | | | |
| **Capacity**[3] | 50 sheets | | |
| **Sizes** | Custom Sizes: 3 x 5 in. to 8.5 x 14 in. / 76 x 127 mm to 216 x 356 mm | | |
| **Weights** | 16 lb. bond to 58 lb. cover / 60 to 220 gsm | | |

| | | |
|---|---|---|
| **Media Types** | Bond<br>Plain<br>Card Stock<br>Custom<br>Envelopes<br>Glossy Card Stock<br>Hole punched<br>Labels<br>Letterhead<br>Lightweight Cardstock<br>Lightweight Glossy Card Stock<br>Preprinted<br>Recycled | |
| **Tray 1** | | |
| **Capacity**[3] | 250 sheets | |
| **Sizes** | Custom Sizes 3 x 5.8 in. to 8.5 x 14 in. / 76 x 147 mm to 216 x 356 mm | |
| **Weights** | 16 lb. bond to 65 lb. cover / 60 to 176 gsm | |
| **Media Types** | Bond<br>Plain<br>Card Stock<br>Custom<br>Envelopes<br>Glossy Card Stock<br>Hole punched<br>Labels<br>Letterhead<br>Lightweight Cardstock<br>Lightweight Glossy Card Stock<br>Preprinted<br>Recycled | |
| **Optional Tray 2** | | |
| **Capacity**[3] | 550 sheets | |
| **Sizes** | Custom Sizes: 3 x 7.5 in. to 8.5 x 14 in. / 76 x 191 mm to 216 x 356 mm | |
| **Weights** | 16 lb. bond to 65 lb. cover / 60 to 176 gsm | |
| **Media Types** | Bond<br>Plain<br>Card Stock<br>Custom<br>Glossy Card Stock<br>Hole punched<br>Letterhead<br>Lightweight Cardstock<br>Lightweight Glossy Card Stock<br>Preprinted<br>Recycled | |
| **Total Capacity** | | |
| **Device Standard Capacity**[3] | 300 sheets | |
| **Device Total Capacity**[3] | 850 sheets | |
| **Paper Output** | | |
| **Output Capacity**[3] | 150 sheets | |
| **Automatic 2-Sided** | NA | Standard |

# Xerox® WorkCentre® 6515 Color Multifunction Printer

| Device Specifications | |
|---|---|
| **Electrical Requirements** | |
| **North America** | Voltage: 120 VAC +/- 10 %<br>Frequency: 60 Hz +/- 3 Hz, 12A |
| **Europe** | Voltage: 220-240 VAC +/- 10 %<br>Frequency: 50 Hz +/- 3 Hz, 6A |
| **Power Consumption** | |
| **Operation**[4] | 120V: Maximum 350 watts<br>220V: Maximum 370 watts |
| **Standby Mode**[4] | 120V: Maximum 51 watts<br>220V: Maximum 52 watts |
| **Power Off Mode**[4] | 120V: Maximum 0.2 watts<br>220V: Maximum 0.3 watts |
| **Sleep Mode**[4] | 120V: Maximum 1.1 watts<br>220V: Maximum 1.2 watts |
| **Warm-up (from Sleep Mode)** | As fast as 27 seconds |
| **Operating Environment** | |
| **Required Temperature Range**<br>Storage<br>Operating | <br>-4˚F to 104˚F / -20˚C to 40˚C<br>41˚F to 90˚F / 5˚C to 32˚C |
| **Required Relative Humidity** | 15 % to 85 % |
| **Sound Power Levels**<br>Operating<br>Standby | <br>6.84 B or less<br>4.25 B or less |
| **Sound Pressure Levels**<br>Operating<br>Standby | <br>52.5 dB(A) or less<br>26.3 dB(A) or less |
| **Dimensions and Weights (unpackaged)** | |
| **Workcentre 6515N, DN, and DNI** | Width: 16.5 in. / 420 mm<br>Depth: 19.9 in. / 506 mm<br>Height: 19.7 in. / 500 mm<br>Weight: 67.7 lb. / 30.7 kg |
| **550-sheet Paper Tray** | Width: 16.5 in. / 420 mm<br>Depth: 18.3 in. / 465 mm<br>Height: 5.9 in. / 150 mm<br>Weight: 14.8 lb. / 6.7 kg |
| **Dimensions and Weights (packaged)** | |
| **Phaser 6510N, DN and DNI** | Width: 25 in. / 634 mm<br>Depth: 22.8 in. / 580 mm<br>Height: 26 in. / 659 mm<br>Weight: 79.8 lb. / 36.2 kg |
| **550-sheet Paper Tray** | Width: 21.1 in. / 535 mm<br>Depth: 23 in. / 584 mm<br>Height: 9.8 in. / 248 mm<br>Weight: 18.7 lb. / 8.5 kg |

# Xerox® WorkCentre® 6515 Color Multifunction Printer

| System Certification/Regulatory Compliance | |
|---|---|
| **Certifications** | c TUV us<br>FCC 47CFR15-B<br>ICES/NMB-3 “A”<br>CE<br>NOM<br>EAC<br>UkrSepro<br>BIS<br>GS<br>FCC 47CFR68<br>ISED DC-01<br>Citrix™ Certified<br>Cerner<br>Apple® AirPrint® certification<br>Google Cloud Print™ Certification<br>Mopria® certified<br>Wi-Fi Alliance Certified<br>Blue Angel<br>MEDITECH<br>ECOLOGO®<br>EPEAT (United States)<br>ENERGY STAR®<br>To view the latest list of certifications, go to www.xerox.com/OfficeCertifications. |
| **Copy** | |
| **Document Scanner** | Single-pass Duplex Automatic Document Feeder (DADF) with 50-sheet capacity |
| **Document Scanner Size** | Platen: Up to 8.5 x 11.7 in / A4<br>DADF: 8.5 x 14 in. / 216 x 356 mm |
| **Simplex Speed** | Black and White: Up to 21 cpm (copies per minute) 8.5 x 11 in. / A4 / 210 x 297 mm<br>Color: Up to 13 cpm (copies per minute) 8.5 x 11 in. / A4 / 210 x 297 mm |
| **Duplex Speed** | Black and White: Up to 9 cpm (copies per minute) 8.5 x 11 in. / A4 / 210 x 297 mm<br>Color: Up to 8 cpm (copies per minute) 8.5 x 11 in. / A4 / 210 x 297 mm |
| **First-Copy-Out Time** | As fast as 12 seconds from the Platen |
| **Sides (input:output)** | 1:1, 1:2, 2:2, and 2:1 |
| **Quantity** | 1 to 999 |
| **Resolution** | Up to 600 x 600 dpi |
| **Reduction/Enlargement** | Variable zoom from 25 % to 400 % in 1 % increments |
| **Concurrency** | Concurrent scanning and printing |
| **Copy Features** | Automatic Background Suppression<br>Book Copying<br>Book Copying with Center Erase<br>Collation<br>Darkness Control<br>Edge Erase<br>ID Card Copy<br>N-up<br>Reduce/Enlarge (25 %-400 %)<br>Image Shift<br>Original Type<br>Sample Copy<br>Sharpness |
| **Print** | |
| **First-print-out Time** | As fast as 12 seconds Color and Black and White |
| **Print Resolution** | Up to 1200 x 2400 dpi |

# Xerox® WorkCentre® 6515 Color Multifunction Printer

| | |
|---|---|
| **Page Description Languages** | Adobe® PostScript® 3™<br>PCL® 5e, 6<br>PDF<br>TIFF |
| **Maximum Print Area** | 4 mm edge of paper |
| **Print Features** | Banner Sheets<br>Booklet Print<br>Cover / Separators<br>Draft Mode<br>Fit to Page<br>N-up<br>Overlays<br>PANTONE® Color Calibrated Solid-color Simulations<br>Personal Print<br>Proof Print<br>RAM Collation<br>Run Black<br>Saved Print<br>Secure Print<br>Watermarks |
| **Print from USB** | Allows walk-up printing from Type A USB port<br>Supports direct printing from computer via Type B USB port<br>Supported file formats: PDF, JPEG, TIFF, XPS |
| **Operating Systems** | Windows®, 7, 8, 10, Server 2000, Server 2003, Server 2008, Server 2008 R2, Server 2012<br>Mac OS® version 10.10 and higher<br>Citrix®<br>Redhat® Enterprise<br>Linux®<br>IBM® AIX® 5<br>HP-UX® 11iv2<br>Oracle® Solaris 9, 10<br>Fedora Core 12-15<br>SUSE® |
| **Network Protocols** | TCP/IP: HTTP/HTTPS, IPP, LPR/LDP, Raw Socket Printing/Port 9100, IPv4/IPv6, WSD<br>SMB<br>SMTP, Secure SMTP<br>LDAP, Secure LDAP<br>Bonjour® / AirPrint®<br>FTP<br>Most protocols not in use can be disabled |
| **Administrative Protocols** | DHCP, SNMP v2/3, WINS, DHCP Autonet, TLS, SNTP, MDNS |
| **Font Capability** | 136 PostScript fonts<br>88 PCL fonts |
| **Mobile Solutions and Mobile Device Apps** | |
| **Xerox® Mobile Express Driver®** | Makes it easy for mobile users to find, use and manage Xerox® and non-Xerox® devices in every new location. Plug into a new network, and Mobile Express Driver automatically discovers available printers and provides status and capability information. Save a list of “favorite” printers for each location, store application print settings for use on any printer in any network, and greatly reduce mobile support calls to IT. |
| **Xerox® Global Print Driver®** | A truly universal print driver that lets IT administrators install, upgrade and manage Xerox® and non-Xerox® devices from a single driver. It provides a consistent, easy-to-use interface for end-users, reducing the number of support calls, and simplifying print services management. |
| **Apple® AirPrint®** | Print email, photos and important office documents directly from an Apple iPhone® or iPad® with no drivers to install and no cables to connect. With AirPrint, an iPhone or iPad automatically locates and connects to the AirPrint-enabled device over the office Wi-Fi network. |
| **Google Cloud Print™** | Google Cloud Print connects print devices to the web, enabling users to print the applications they use every day from smartphones, tablets, Chromebook™ notebook computers and any other web-connected device. |

# Xerox® WorkCentre® 6515 Color Multifunction Printer

| | |
|---|---|
| **Xerox® Print Service Plug-in for Android™ (Free at Google Play™ Store)** | The Xerox® Print Service Plug-in for Android KitKat (4.4 or greater) devices streamlines mobile printing without third-party apps or additional print drivers.<br>You can easily print photos, Web pages and documents when your mobile device is connected to printers or multifunction printers using a wireless network. A robust print option set includes two-sided printing, stapling and secure code release. A free download is available from the Google Play™ store. |
| **Xerox® Mobile Link App (Free at Google Play™ Store and Apple® App Store)** | The Xerox® Mobile Link App allows you to scan, email and fax from your phone or tablet by connecting with our multifunction printers and send data to and print data from cloud storage. It is easy to create Mobile Link One-Touch Workflows between a mobile device and a multifunction printer. Using a manual address or QR code identification for pairing, automatic device discovery makes it easy to find and pair a mobile device with a nearby Xerox® multifunction printer. |
| **Xerox® Wireless Print Solutions Adapter (Optional)** | The Xerox® Wireless Print Solutions Adapter seamlessly connects your Xerox® printer or MFP to modern mobile and desktop workflows, regardless of your office environment. For more information, visit **www.xerox.com/WPSA** |
| **Xerox® Print Management and Mobility Suite,<br>Xerox® Print Management and Mobility Service** | Xerox® Print Management and Mobility Suite is a modular set of workflows designed to save customers time and money by providing effective control over their print fleet, while enabling worker productivity and mobility through a set of robust workflows. Xerox enables ultimate customer flexibility by offering these capabilities in both an on-premises server version and with a cloud based-version of this solution. |
| Scan | |
| **Capability** | Color and Black-and-white |
| **Concurrency** | Scan while the system is printing copy or network print jobs, or while it is transferring scan to network or fax jobs |
| **Input Speed - Black and White** | Scan up to 37 ipm – 8.5 x 11 in. / A4 / 210 x 297 mm |
| **Input Speed - Color** | Scan up to 21 ipm – 8.5 x 11 in. / A4 / 210 x 297 mm |
| **Resolution** | Optical – 600 x 600 dpi |
| **Bit Depth** | 24-bit Color / 8-bit Grayscale |
| **Maximum Scan Area** | Platen: Up to 8.5 x 11.7 in. / A4<br>Document Feeder: Up to 8.5 x 14 in. / 216 x 356 mm |
| **Network Filing Protocol** | FTP<br>SMTP<br>SMB/SMB2 |
| **File Formats** | JPG<br>Single-page and Multi-page TIFF<br>PDF<br>Searchable PDF with integrated OCR |
| **Scan Driver Compatibility** | WIA<br>TWAIN |
| **Supported Scan Destinations** | Scan to Email (local address book or LDAP integration)<br>Scan to Network (via FTP/SMB)<br>Scan to USB Memory Device<br>Scan to Email (SMTP)<br>Scan to WSD<br>Scan to Application (TWAIN Network)<br>Scan to WIA (WSD Scan)<br>Scan to Mac 10.9 or later (Network/Mac ICA)<br>Scan to Network Computer (SMB/FTP)<br>Scan to Multiple Destinations in a Single Scan Job |

# Xerox® WorkCentre® 6515 Color Multifunction Printer

| | |
|---|---|
| **Security** | |
| **Security Features** | Simultaneous HTTP and HTTPS support<br>IPsec<br>802.1x Authentication<br>S/MIME<br>IP Filtering<br>Secure Print<br>Secure Fax Receive<br>SNMP v3<br>LDAP (SASL)<br>Network Authentication<br>Kerberos Authentication (Unix / Linux / Windows ADS) |
| **Fax[5]** | |
| **Fax Speed** | 33.6 Kbps |
| **Memory** | 4 MB |
| **Resolution** | Up to 400 x 400 dpi |
| **Compression** | MH/MR/MMR/JBIG |
| **Fax Features** | Broadcast Sending (up to 200 destinations)<br>Delayed Start (up to 24 hours)<br>Fax Address Book (up to 200 speed dials)<br>Fax Forward to Email<br>Fax Forwarding and Local Print<br>Polling Receive<br>Reject Junk Fax<br>Secure Fax Receive |
| **Device Management** | |
| **Xerox® CentreWare® Web** | |
| | • A Web-based server application for network administrators that permits web browser-based device management from any workstation, whether running Windows or UNIX or any other operating system<br>• Works with any SNMP-managed printer from any manufacturer<br>• Provides help with device discovery and installations, health checks and troubleshooting, and device upgrades, as well as basic accounting and asset management |
| **Xerox® Embedded Web Server - Integrated Device Web Page** | |
| **Device Status** | • Tray status/contents<br>• Consumables status<br>• Billing/Usage<br>• Quick Links |
| **Job Submission** | Print-ready files (PS, PCL®, PDF, XPS, JPEG) |
| **Device Administration** | Allows simple, remote installation setting of configuration options and management of the device. |
| **Browsers** | Microsoft® Internet Explorer 11<br>Microsoft Edge™ 38<br>Mozilla™ Firefox® 48<br>Apple® Safari® 9.1<br>Google Chrome™ 52 |
| **Remote Print Services** | |
| **Xerox® MeterAssistant® Service** | Automates the process of collecting and submitting meter reads for tracking and billing of Xerox® device usage. Eliminates the need for time-consuming end-user involvement and ensures that meter reads are submitted to Xerox on time. |
| **Xerox® SuppliesAssistant® Service** | Automatically orders supplies for Xerox® output devices based on actual usage, eliminating the need to manually manage supplies inventory. |
| **Maintenance Assistant** | Offers a fast (and free) way to resolve potential issues and receive assistance and automate the troubleshooting/repair process. Diagnostic data is sent to Xerox, allowing for problems to be solved faster with increased uptime. |

# Xerox® WorkCentre® 6515 Color Multifunction Printer

| What's In The Box | |
|---|---|
| | • WorkCentre 6515 Color Multifunction Printer<br>• Standard Capacity Print cartridge: One of each (Cyan, Magenta, Yellow: 1,000 print capacity[6]; Black: 1,500 print capacity[6]<br>• Software and Documentation CD (with User Manual, Quick Install Guide, Safety, Regulatory, Recycling and Disposal Guides, Print Drivers, and Warranty Statement)<br>• Installation Guide<br>• Quick Use Guides<br>• Power cord<br>• Fax cord |

| Supplies and Accessories | Quantity | Part Number |
|---|---|---|
| **Supplies** | | |
| **Extra-High Capacity Print Cartridges** | Cyan: 4,300 standard pages[6]<br>Magenta: 4,300 standard pages[6]<br>Yellow: 4,300 standard pages[6] | 106R03690<br>106R03691<br>106R03692 |
| **High Capacity Print Cartridges** | Black 5,500 standard pages[6]<br>Cyan: 2,400 standard pages[6]<br>Magenta: 2,400 standard pages[6]<br>Yellow: 2,400 standard pages[6] | 106R03480<br>106R03477<br>106R03478<br>106R03479 |
| **Standard Capacity Print Cartridges** | Black: 2,500 standard pages[6]<br>Cyan: 1,000 standard pages[6]<br>Magenta: 1,000 standard pages[6]<br>Yellow: 1,000 standard pages[6] | 106R03476<br>106R03473<br>106R03474<br>106R03475 |
| **Drum Cartridges** | Black: 48,000 pages[7]<br>Cyan: 48,000 pages[7]<br>Magenta: 48,000 pages[7]<br>Yellow: 48,000 pages[7] | 108R01420<br>108R01417<br>108R01418<br>108R01419 |
| **Waste Cartridge** | 30,000 pages[7] | 108R01416 |
| **Accessories** | | |
| **550-sheet Paper Tray** | | 097S04765 |
| **Wireless Network Adapter** | | 497K16750 |

[1] Maximum volume capacity expected in any one month. Not expected to be sustained on a regular basis.
[2] Expected regular monthly throughput.
[3] Paper capacities are based on 20 lb. / 75 gsm stock; capacities will vary with different weight stocks.
[4] Power states defined per ENERGY STAR® Program requirements for Imaging Equipment.
[5] Requires analog phone line.
[6] Average standard pages. Declared Yield in accordance with ISO/IEC 19798. Yield will vary based on image, area coverage and print
[7] Approximate pages. Declared Yield based on letter-/A4-size 20 lb. (75 gsm) pages. Yield will vary based on media type, size, weight, orientation, and usage patterns.

Return spent imaging supplies through the Xerox Green World Alliance collection/reuse/recycling program. For more information, visit **www.xerox.com/about-xerox/recycling**.

For more information, visit us at **www.xerox.com**

©2018 Xerox Corporation. All rights reserved. Xerox®, Xerox and Design®, CentreWare®, Global Print Driver®, MeterAssistant®, Mobile Express Driver®, SuppliesAssistant® and WorkCentre® are trademarks of Xerox Corporation in the United States and/or other countries. As an ENERGY STAR® partner, Xerox Corporation has determined that this product meets the ENERGY STAR guidelines for energy efficiency (DN and DNI configurations). ENERGY STAR and the ENERGY STAR mark are registered U.S. marks. The information in this brochure is subject to change without notice. Updated 1/18 BR19949 65XSS-02UF

REVIEWED BY CONTRACTOR

Kudlik Construction Ltd.

NAME: Sandra Rousseau P.Eng

DATE: Jul 05, 2018

NORCLAIR
MÉCANIQUE DE PROCÉDÉ

# TDS AND SHOP DRAWINGS

**DA-IC-06-Quote** Scada

**Date :** 2018-07-05

| INFORMATION | |
|---|---|
| Project : **WASTEWATER PLANT - IQALUIT** | |
| Client : Kudlik Construction Ltd.<br>To Sandra Rousseau P.Eng./ Project Manager | Project number : **2018-062** |
| Contractor : Norclair inc. | Project number Norclair : **P1039** |
| Address : 1100, Montee Masson, Laval, QC, Canada H7E 4P2 | |
| Project Manager : Dominic Papineau | E-mail: dpapineau@norclair.ca |
| Phone: 450-688-4012 # 720 | Cell.: 514-409-1832 |

| Information, subcontractor or supplier | |
|---|---|
| Sub supplier : Inductive automation | |
| Contact : Réf. : Entreprises LM | Phone : 1-800-266-7798 |

| Information on the equipment or the proposed materials | |
|---|---|
| Speciality : Instruments and controls | |
| Equipment :<br>Quote Scada, Custom Package and basic Care Contract – 1 year term | |
| Drawing reference : | |
| Specification reference : | Division : |
| Article : | Number Page : 2 |

## CONSULTANT APPROVAL

No comments

STANTEC PROJECT #: 110126045

SUBMITTAL # DA-IC-05 (2018-07-05)

This review by Stantec is for general conformance with the design concept of Stantec's design of the:

☐ Architectural ☐ Structural ☐ Mechanical ☐ Electrical ☑ Other Instrumentation

component(s) only and does not mean that Stantec has verified or approves the shop drawing(s). The Contractor remains solely responsible for the shop drawing(s) and this review by Stantec does not relieve the Contractor of the Contractor's responsibility for errors or omissions in the shop drawing(s) or for meeting all requirements of the contract documents. This review does not mean that Stantec approves the detailed design inherent in the shop drawing, responsibility for which shall remain with the Contractor submitting same, nor does this review mean that Stantec accepts any deviation of the shop drawing(s) from the contract documents. The Contractor is responsible for confirming all dimensions and correlating them at the job site, for all construction means, methods and techniques, and for coordination of construction work of all trades, including coordination of all shop drawings.

Stantec

☑ REVIEWED

☐ REVIEWED, AS NOTED

☐ REVISE AND RESUBMIT

☐ NOT REVIEWED

DATE 2018-JUL-09

BY David Hutchison, P.Eng.

1100, Montée Masson
Laval, QC, Canada
H7E 4P2

Phone. : 450-688-4012
Fax : 450-661-6341
E-Mail : info@norclair.ca
www.norclair.ca

inductive automation

PO Box 2030
Folsom, CA 95763
(800) 266-7798
(916) 932-1194 (Fax)

# *QUOTE*

Taken: May 1, 2018
Expires: May 31, 2018
Quote #1110766

| *Bill To:* | *Ship To:* |
|---|---|
| Enterprises LM<br>Olivier Chalifoux-Lauzon<br>3006 Sainte-Catherine E.<br>Montral, QC H1W 2B8<br>Canada | Enterprises LM<br>Olivier Chalifoux-Lauzon<br>3006 Sainte-Catherine E.<br>Montral, QC H1W 2B8<br>Canada |

| *Qty* | *Product* | *Unit Price* | *Retail* | *Price* |
|---|---|---|---|---|
| 1 | Custom Package (Wastewater Treatment Plant Future) / 1 Client<br>Includes Vision Limited (1 client), Tag Historian, Alarm Notification, Voice Notification and AB Driver modules | | | |
| 1 | Basic Care Contract - 1 Year Term<br>Does not include phone support. Best for customers who want access to technical support reps via email, but don't require issues expedited via phone support. Includes email support and free upgrades to any modules purchased. | | | |

***Comments:*** Please send purchase order to:

Your Account Manager,
Vannessa Garcia
916-456-1045 x231
vannessa@inductiveautomation.com

THANK YOU!

This is a quote on the product(s) named above.
***This item was quoted on May 1, 2018.***
***Quote expires on May 31, 2018.***
***Payment Terms: Net 30.***

Thank you for your business!

REVIEWED BY CONTRACTOR

Kudlik Construction Ltd.

NAME: Sandra Rousseau P.Eng

DATE: Jul 13, 2018

NORCLAIR
MÉCANIQUE DE PROCÉDÉ

# SHOP DRAWINGS

**DA-IC-07** (Strobes and horns) **Date :** 2018-07-12

| **Information general** | |
|---|---|
| Project : **WWTP UPGRADE - IQALUIT** | |
| Client : Kudlik Construction Ltd.<br>To : Sandra Rousseau P.Eng., Project Manager | Project number : **2018-062**<br>E-mail : srousseau@kudlik.biz |
| Contractor : **Norclair inc.** | Project number Norclair : **P1039** |
| Address : 1100, Mountain Masson, Laval, QC, Canada H7E 4P2 | |
| Project Manager : Dominic Papineau, Project Manager | E-mail: dpapineau@norclair.ca |
| Phone : 450-688-4012 # 720 | Cell. : 514-409-1832 |

| **Information, subcontractor or supplier** | |
|---|---|
| Sub/supplier : Lumen | |
| Contact : Anthony Nadji | Phone : 514-493-4127 |

| **Information on the equipment** | |
|---|---|
| Speciality : **Instruments and controls** | |
| Equipment : Strobes and horns | |
| Drawing reference : I201 to I207 | |
| Specification reference : **47 30 02** (Page 10) and **RFI-036** | Division : Field control devices |
| Article : 2.14.4 & 2.14.6 | Number of pages : 14 |

**CONSULTANT APPROVAL**

No comments

STANTEC PROJECT #: 110126045

SUBMITTAL # DA-IC-07 (2018-07-13)

This review by Stantec is for general conformance with the design concept of Stantec's design of the:

☐ Architectural ☐ Structural ☐ Mechanical ☑ Electrical ☑ Other Instrumentation

component(s) only and does not mean that Stantec has verified or approves the shop drawing(s). The Contractor remains solely responsible for the shop drawing(s) and this review by Stantec does not relieve the Contractor of the Contractor's responsibility for errors or omissions in the shop drawing(s) or for meeting all requirements of the contract documents. This review does not mean that Stantec approves the detailed design inherent in the shop drawing, responsibility for which shall remain with the Contractor submitting same, nor does this review mean that Stantec accepts any deviation of the shop drawing(s) from the contract documents. The Contractor is responsible for confirming all dimensions and correlating them at the job site, for all construction means, methods and techniques, and for coordination of construction work of all trades, including coordination of all shop drawings.

Stantec

☑ REVIEWED

☐ REVIEWED, AS NOTED

☐ REVISE AND RESUBMIT

☐ NOT REVIEWED

DATE 2018-JUL-16

BY David Hutchison, P.Eng.

1100, montée Masson
Laval, QC, Canada
H7E 4P2

Phone. : 450-688-4012
Fax : 450-661-6341
E-Mail : info@norclair.ca
www.norclair.ca

Strobe lights (indooor/outdoor, non-XP)

17x



# AST - 1 BASE MOUNT STROBE WARNING LIGHT

## APPLICATIONS:

- to visually indicate warnings or hazards in high noise level areas where audible signals may not be heard
- to indicate the starting and stopping of operations in a manufacturing environment
- to indicate faulty equipment

## FEATURES:

- solid state power supply
- low power consumption (12 watts)
- intensity 2,000,000 candlepower (peak)
- Polycarbonate fresnel lens
- cast zinc alloy housing with a grey epoxy finish for superior corrosion resistance
- designed for intermittent visual signaling as well as longer duration signaling applications
- flash rate - 60 flashes/minute
- flash tube life - minimum 10 million flashes at 60 flashes/minute
- 1/2 conduit entry
- weatherproof

9001 ISO Certified

Made in Canada

C SP US

**Applied Strobe Technology Company Limited**

INDUSTRIAL STROBE WARNING LIGHTS

8345 Stanley Avenue, Niagara Falls, Ontario, Canada L2G 0C8 905-374-3077, Fax 905-374-6114

e-mail: sales@appliedstrobe.com www.appliedstrobe.com

**Temperature Range**
-40 C to +85 C

**Electrical Ratings**

| Supply Voltage Range | Frequency | Current Range ( avg ) | Inrush Current (max) |
|---|---|---|---|
| 90 to 130 VAC | 50/60Hz | .118 A to .090 A | .250 A |
| 220 to 250 VAC | 50/60Hz | .072 A to .055 A | .220 A |
| 10 to 30 VDC | - | .8 A to .4 A | 1.30 A |
| 50 to 60 VDC | - | .360 A to .300 A | . 820 A |
| 90 to 130VDC | - | .175A to .090 A | . 250 A |
| 220 to 250VDC | - | .070A to .055 A | . 220 A |

**Net Weight:** 4.5 lbs

## Ordering Information

| Model No | Input Voltage |
|---|---|
| AST-1-90-130-AC | 90 - 130 VAC |
| AST-1-220-250-AC | 220 - 250 VAC |
| AST-1-10-30-DC | 10 - 30 VDC |
| AST-1-90-130-DC | 90 - 130 VDC |
| AST-1-220-250-DC | 220 - 250 VDC |
| AST-1-50-60-DC | 50 - 60 VDC |

**Lens Colors**

| | | |
|---|---|---|
| AM | - Amber Lens | 5x |
| BL | - Blue Lens | 12x |
| RE | - Red Lens | |
| GR | - Green Lens | |
| CL | - Clear Lens | |
| PU | - Purple Lens | |

**Ordering Example**

AST-1-10-30-DC-RE

## Replacement Parts

**Circuit Board**

| | | | |
|---|---|---|---|
| AST-1 - 90-130-AC -Board | 90 - 130 | VAC | Circuit Board |
| AST-1-220-250-AC -Board | 220 - 250 | VAC | Circuit Board |
| AST-1 - 10 - 30-DC -Board | 10 - 30 | VDC | Circuit Board |
| AST-1 - 90-130-DC -Board | 90 - 130 | VDC | Circuit Board |
| AST-1-220-250-DC -Board | 220 - 250 | VDC | Circuit Board |
| AST-1 - 50 - 60-DC -Board | 50 - 60 | VDC | Circuit Board |

**Flash Tube**

AST-FT 3050 Flash Tube

**Lenses**

| | |
|---|---|
| AST-1-Lens-RE | Red Lens |
| AST-1-Lens-AM | Amber Lens |
| AST-1-Lens-BL | Blue Lens |
| AST-1-Lens-GR | Green Lens |
| AST-1-Lens-CL | Clear Lens |
| AST-1-Lens-PU | Purple Lens |

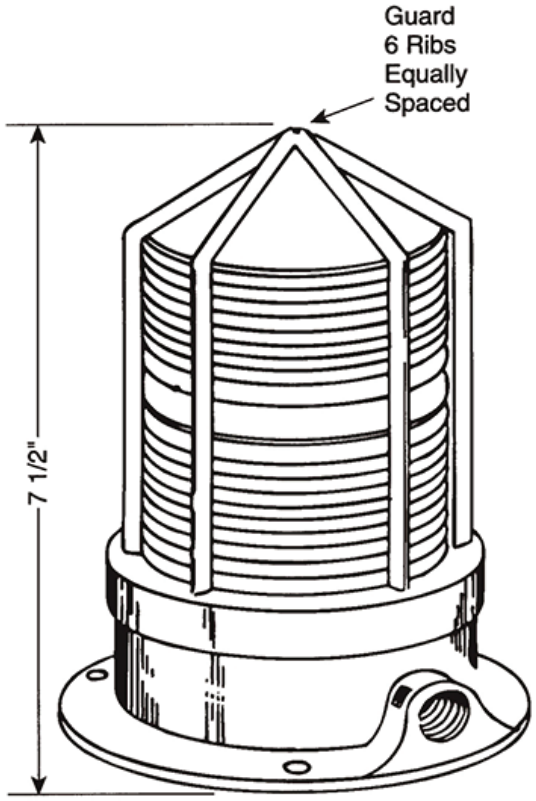


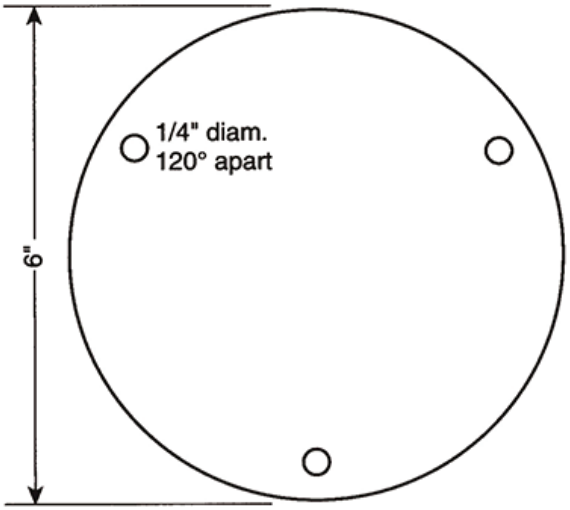


# BASE MOUNT STROBE

Strobe lights (indooor, XP-rated)

6x



# AST - 14 PENDANT MOUNT HAZARDOUS AREA STROBE WARNING LIGHT

## COMPLIANCES:

Class I - Div. 2, Groups A,B,C,D
Class II - Groups E,F,G
Class III - Enclosure 3
Temp Code: See Electrical Ratings
CSA# - LR56828-2
** Type 3 and/or 4X ( where applicable )

* **New - 55°C starting and operating temperature**
Note: Performance tested to start and operate at - 55° C

LISTED
15UD

Visual Signal Appliance, Fire Alarm for Use in Hazardous Locations

15 - 30 VDC input - 4 wire Clear Lens Only
21 - 30 VDC sync input - 4 wire Clear Lens Only

## APPLICATIONS:

- to visually indicate warnings or hazards in high noise level areas where audible signals may not be heard
- to indicate the starting and stopping of operations in a manufacturing environment
- to indicate faulty equipment

## FEATURES:

- solid state power supply
- low power consumption (12 watts)
- intensity 2,000,000 candlepower (peak)
- Polycarbonate fresnel lens
- cast zinc alloy housing with a grey epoxy finish for superior corrosion resistance
- may be operated in any position
- designed for intermittent visual signalling as well as longer duration signalling applications
- lens sealed in guard
- flash rate - 60 flashes/minute - alternate flash rate available
- flash tube life - minimum 10 million flashes at 60 flashes/minute
- 3/4 conduit entry
- weatherproof

9001 ISO Certified

Made in Canada

C US

**Applied Strobe Technology Company Limited**
INDUSTRIAL STROBE WARNING LIGHTS
8345 Stanley Avenue, Niagara Falls, Ontario, Canada L2G 0C8 905-374-3077, Fax 905-374-6114
e-mail: sales@appliedstrobe.com www.appliedstrobe.com

### Operating Temperature Range

-40 C to +85 C ( AST-14-S )
-55 C to +85 C ( AST-14-L )

### Electrical Ratings

| Supply Voltage Range | Frequency | Current Range ( avg ) | Inrush Current (max) | T Code @ 40° C | T Code @ 85° C |
|---|---|---|---|---|---|
| 90 to 130 VAC | 50/60Hz | .118 A to .090 A | .250 A | T3C | T3 |
| 220 to 250 VAC | 50/60Hz | .072 A to .055 A | .220 A | T3A | T2C |
| 10 to 30 VDC | - | .8 A to .4 A | 1.30 A | T3A | T2C |
| 50 to 60 VDC | - | .360 A to .300 A | . 820 A | T2D | T2B |
| 90 to 130VDC | - | .175 A to .090 A | . 250 A | T3C | T3 |
| 220 to 250VDC | - | .070 A to .055 A | . 220 A | T3A | T2C |
| 15 to 30 VDC | | .8 A to .4 A | 1.30 A | T3A | T2C |
| 21 to 30 VDC | - | .5 A | 1.30 A | T3A | T2C |

**Net Weight:** 4.5 lbs

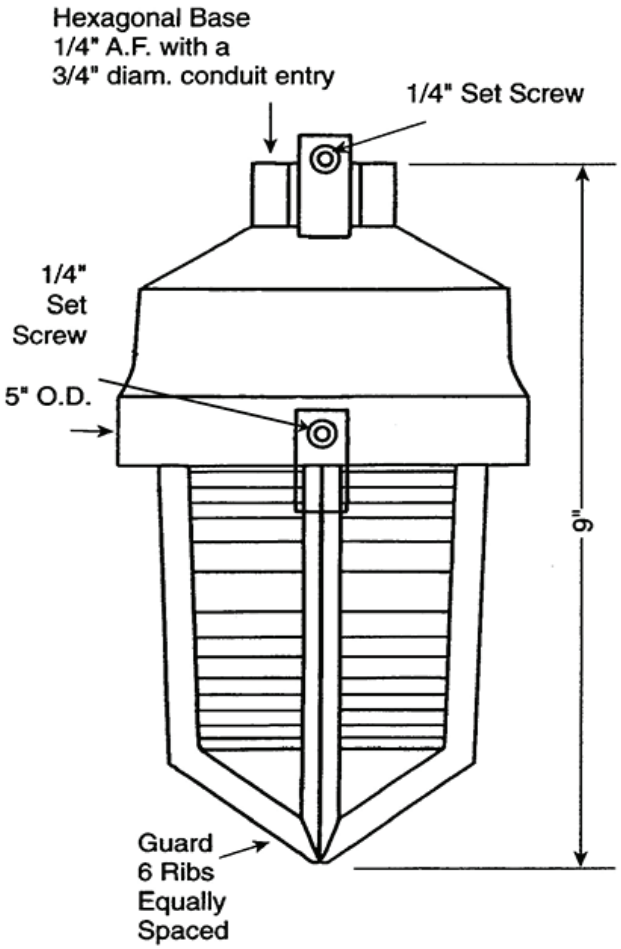


## Ordering Information

| Model No | Input Voltage |
|---|---|
| AST-14- * -90-130-AC | 90 - 130 VAC |
| AST-14- * -220-250-AC | 220 - 250 VAC |
| AST-14- * -10-30-DC | 10 - 30 VDC |
| AST-14- * -90-130-DC | 90 - 130 VDC |
| AST-14- * -220-250-DC | 220 - 250 VDC |
| AST-14- * -50-60-DC | 50 - 60 VDC |
| AST-14- L -15-30-DC | 15 - 30 VDC |
| AST-14- Sync -21-30-DC | 21 - 30 VDC |

NOTE: * - **S** for standard temperature range and - **L** for low temperature range

### Lens Colors

| | | |
|---|---|---|
| AM | - Amber Lens | 3x |
| BL | - Blue Lens | 3x |
| RE | - Red Lens | |
| GR | - Green Lens | |
| CL | - Clear Lens | |
| PU | - Purple Lens | |

### Ordering Example

AST-14-S-10-30-DC-RE

### ULC Approved

AST-14-L-15-30-DC-CL-ULC
AST-14-Sync-21-30-DC-CL

## Replacement Parts

### Circuit Board

| | | | | |
|---|---|---|---|---|
| AST-14- * -90-130-AC -Board | 90 - 130 | VAC | Circuit Board |
| AST-14- * -220-250-AC -Board | 220 - 250 | VAC | Circuit Board |
| AST-14-* -10-30-DC -Board | 10 - 30 | VDC | Circuit Board |
| AST-14-*-90-130-DC -Board | 90 - 130 | VDC | Circuit Board |
| AST-14-*-220-250-DC -Board | 220 - 250 | VDC | Circuit Board |
| AST-14-*-50-60-DC -Board | 50 - 60 | VDC | Circuit Board |
| AST-14-L-15-30-DC -Board -ULC | 15 - 30 | VDC | 4 wire Circuit Board |
| AST-14-Sync-21-30-DC -Board | 21 - 30 | VDC | 4 wire Circuit Board |

NOTE: * - **S** for standard temperature range and - **L** for low temperature range

### Flash Tube

AST-FT 3050 Flash Tube

### Lenses

| | |
|---|---|
| AST-14-Guard-Lens-RE | Red Lens |
| AST-14-Guard-Lens-AM | Amber Lens |
| AST-14-Guard-Lens-BL | Blue Lens |
| AST-14-Guard-Lens-GR | Green Lens |
| AST-14-Guard-Lens-CL | Clear Lens |
| AST-14-Guard-Lens-PU | Purple Lens |

## Bulletin 855H — General-purpose Electronic Horns

Single- or dual-circuit, selectable tone horns, with volume control, for use in general signaling applications.



**855H – SG 10 GPA**

a b c

| a | |
|---|---|
| **Mounting Type** | |
| **Code** | **Description** |
| FG | Semi-flush wall plate, gray housing |
| SG | Surface base with two conduit entrances, gray housing |

| b | |
|---|---|
| **Voltage** | |
| **Code** | **Description** |
| 24 | 24V AC/DC |
| 10 | 120V AC |
| 20 | 240V AC |
| 30 | 10…30V DC |
| 45 | 40…260V AC/DC, 50/60 Hz |

| c | |
|---|---|
| **Horn Type** | |
| **Code** | **Description** |
| GPA (1) | General-purpose, 108 dB(A) max, single stage/circuit, three tones |
| GPE (2) | Enhanced version, 113 dB(A) max @ 1 m (3.3 ft), two stage, three tones, volume control |

(1) Not valid with voltage codes 30 and 45 (Table b).
(2) Not valid with mounting type FG (Table a) or with voltage codes 24, 10, and 20 (Table b).

## Accessories — Bulletin 855H General-purpose Electronic Horns

| | Description | Cat. No. |
|---|---|---|
|  | M20 hole plug replacement kit (1) | 855H-AHPK |

(1) For use with mounting type SG only.

## Specifications — Bulletin 855H General-purpose Electronic Horns

### Table 5 - Environmental

| Attribute | | Value |
|---|---|---|
| Ingress Ratings | Semi-flush Mount | UL Type 3R/13, IP54 |
| | Surface Mount | UL Type 4/4X/13/3R, IP66 |
| Temperature Ranges | Operating | -25…+55 °C (-13…+131 °F) |
| | Storage | -40…+70 °C (-40…+158 °F) |

### Table 6 - Materials

| Part | Material |
|---|---|
| Housings including horn cover and base | Polycarbonate |
| O-ring | NBR |
| Gasket (mounting type FG) | EPDM/SBR closed-cell foam |

### Table 7 - Performance Ratings

| Attribute | | Performance Rating |
|---|---|---|
| Sound Output | Standard (GPA) | 105±3 dB(A) @ 1 m (3.3 ft) |
| | Enhanced (GPE) | 110±3 dB(A) @ 1 m (3.3 ft) |

**Table 8 - Operating Voltage and Currents**

| Attribute | Horn Type | DC Voltage | AC Voltage | | |
|---|---|---|---|---|---|
| Input Voltage Ranges | Standard (GPA) | 24V DC (±25%) | 24V AC, 50/60 Hz (±10%) | 120V AC, 50/60 Hz (±10%) | 240V AC, 50/60 Hz (±10%) |
| | Enhanced (GPE) | 10…30V DC | 40…260V AC/DC | | |
| Input Currents @ Nominal Voltage | Standard (GPA) | 62 mA | 220 mA | 40 mA | 50 mA |
| | Enhanced (GPE) | 105 mA | — | 36 mA | 18 mA |

*Standards Compliance*

- UL 464
- CSA C22.2 No. 205
- EN/IEC 60947-1
- EN/IEC 60947-5-1
- EN 6100-6-2
- EN 6100-6-3

*Certifications*

- c-UL-us Listed (File No. S6583, Guides UCST, UCST7)
- CE Marked

## Approximate Dimensions — Bulletin 855H General-purpose Electronic Horns

Dimensions in millimeters (inches). Dimensions are not intended to be used for manufacturing purposes.

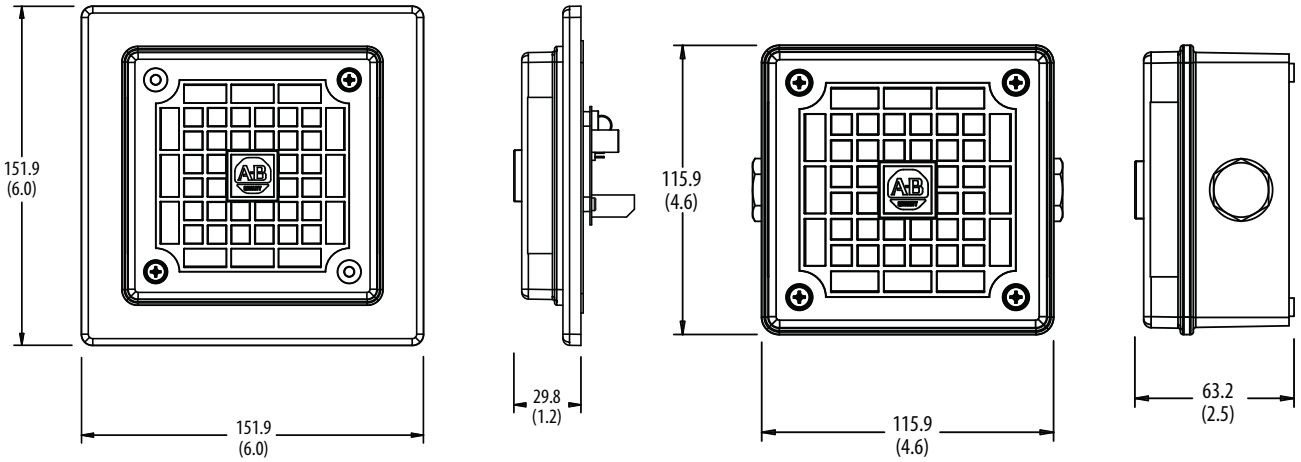


**Semi-flush Mount** **Surface Mount**

# Bulletin 855XM — Hazardous Location Metal Horns

## Alarm Horn Sounders





| 855XM | – | C | G | M | D24 | D | A | 4 |
|---|---|---|---|---|---|---|---|---|
| | | a | b | c | d | e | f | g |

| a | |
|---|---|
| **Product Type** | |
| **Code** | **Description** |
| H | Horn only |
| C | Horn with attached xenon strobe |

| b | |
|---|---|
| **Housing Color** | |
| **Code** | **Description** |
| G | Gray |

| c | |
|---|---|
| **Conduit Entry** | |
| **Code** | **Description** |
| M | Two M20 x 1.5 mm conduit entries |

| d | |
|---|---|
| **Voltage** | |
| **Code** | **Description** |
| D24 | 20…28V DC (3) |
| D30 | 10…30V DC (4) |
| A10 | 115…125V AC 60 Hz |
| A20 | 215…250V AC 50 Hz |

| e | |
|---|---|
| **Horn Type** | |
| **Code** | **Description** |
| D | 116 dB (A) @ 1 m (3.3 ft), 64 tones, 4 stages |

| f | |
|---|---|
| **Beacon Type (1) (2)** | |
| **Code** | **Description** |
| Blank | No light |
| A | 5 J, strobe |
| B | 10 J, strobe |

| g | |
|---|---|
| **Lens Color (1)(2)** | |
| **Code** | **Description** |
| Blank | No light |
| 4 | Red |
| 5 | Amber |
| 7 | Clear |

(1) Beacon type and lens color must be Blank for Cat. No. 855XM-H.
(2) Beacon type and lens color cannot be Blank for Cat. No. 855XM-C.
(3) Voltage code D24 only valid with beacon code A and B (Table f).
(4) Voltage code D30 not valid with beacon code A and B (Table f).

## Specifications — Bulletin 855XM

### Table 132 - Mechanical

| Device | The following are reference guidelines for maximum shock and vibration standards for the 855XM horn. | |
|---|---|---|
| | Shock [G] | Vibration [G] |
| Metal horn | 40 | 3 |
| Metal horn with attached beacon | 30 | 3 |

### Table 133 - Environmental

| Attribute | Device | Value | |
|---|---|---|---|
| Ingress rating | Horn and horn with attached beacon | UL Type 4/4X/13/3R, IP66 | |
| | | Operating | Storage |
| Temperature range | Electronic horn | -40…+50°C (-40…+122 °F) (1) | -40…+70 °C (-40…+158 °F) |
| | Horn with attached beacon | -40…+50 °C (-40…+122 °F) | -40…+70 °C (-40…+158 °F) |

(1) -40…+158 °F (-40…+70 °C) for Class 1/Div.2

### Table 134 - Materials

| Part | Material |
|---|---|
| Housing (gray powder coat) | Marine grade aluminum (Al Si12 Cu) |
| Screws | Stainless steel |
| Beacon lens | Polycarbonate over glass |
| Lens cage | Stainless steel |
| Gasket (Cover to Base) | O-ring Fluorosilicone UL |
| Gasket (Screw Mounting Hole) | Fiber washer |

### Table 135 - Performance Ratings

| Device | Sound Output @ 1 m (3.3 ft) (1) | Volume Control | No. of Tones | Stages |
|---|---|---|---|---|
| Metal Horn | 116 dB(A), max | Adjustable -12 dB(A) | 64 | 4 |
| | Light Output (Xenon Strobe Beacon- 5 J) | | Light Output (Xenon Strobe Beacon- 10 J) | |
| Red LED Beacon | 14.6 cd eff/120,000 cd peak | | 42.83 cd eff/240,000 cd peak | |
| Amber LED Beacon | 45.8 cd eff/350,000 cd peak | | 130.9 cd eff/700,000 cd peak | |
| Clear LED Beacon | 80.6 cd eff/500,000 cd peak | | 243.1 cd eff/1,000,000 cd peak | |

(1) SPL data ±3 dB(A). Measured at optimum voltage.

### Table 136 - Operating Voltage and Current Consumption

| Device | Operating Voltage | Nominal Maximum | Inrush | Leakage Immunity |
|---|---|---|---|---|
| **Horns** | | | | |
| 855XM-HGMD30D | 10…30V DC | 160 mA @ 12V DC | 611 mA, 11 ms | >3 mA |
| | | 313 mA @ 24V DC | 1809 mA, 9 ms | |
| | | 225 mA @ 30V DC | 2483 mA, 7 ms @ 30V DC | |
| 855XM-HGMA10D | 115V AC 60 Hz ±10% | 89 mA @ 115V AC 60 Hz | 710 mA, 8 ms | |
| 855XM-HGMA20D | 230V AC 50 Hz ±10% | 52 mA @ 230V AC 60 Hz | 350 mA, 7 ms | |
| **Horns with Beacon** | | | | |
| 855XM-CGMD24DA***x*** | 20…28V DC | 513 mA @ 24V DC (5 J) | 1932 mA, 10 ms | >3 mA |
| 855XM-CGMD24DB***x*** | 20…28V DC | 876 mA @ 24V DC (10 J) | 2074 mA, 11 ms | |
| 855XM-CGMA10DA***x*** | 115…125V AC, 60 Hz | 174 mA @ 115V AC (5 J) | 975 mA, 3 ms | |
| 855XM-CGMA10DB***x*** | 115…125V AC, 60 Hz | 320 mA @ 115V AC (10 J) | 1031 mA, 3 ms | |
| 855XM-CGMA20DA***x*** | 215…250V AC, 50 Hz | 63 mA @ 230V ACDC (5 J) | 1607 mA, 3 ms | |
| 855XM-CGMA20DB***x*** | 215…250V AC, 50 Hz | 100 mA @ 230V AC (10 J) | 1628 mA, 3 ms | |

**Table 137 - Flashing Frequency**

| Device | Frequency |
|---|---|
| Horns with strobe | 1 Hz |

**Table 138 - Miscellaneous**

| Attribute | Value |
|---|---|
| Cable entry | Two M20x 1.5 mm threaded holes |
| Terminal blocks | 0.5…2.5 $mm^2$ (20…14 AWG) |
| Grounding stud | M5 |

**Table 139 - ATEX/IECEx Certification**

| Zone | Group | Temperature Code |
|---|---|---|
| **855XM Hazardous Location Metal Horn** | | |
| Zone 2 | Group IIA (propane)<br>Group IIB (ethylene)<br>Group IIC (hydrogen/acetylene) | T1 (450 °C [842 °F])<br>T2 (300 °C [572 °F])<br>T3 (200 °C [392 °F])<br>T4 (135 °C [275 °F]) |
| Zone 22 (1) | Group IIIA (combustible flyings)<br>Group IIIB (non-conductive dust)<br>Group IIIC (conductive dust) | — |
| **855XM-C Hazardous Location Metal Horn with Strobe** | | |
| Zone 2 | Group IIA (propane)<br>Group IIB (ethylene)<br>Group IIC (hydrogen/acetylene) | T1 (450 °C [842 °F])<br>T2 (300 °C [572 °F]) |
| Zone 22 (2) | Group IIIA (combustible flyings)<br>Group IIIB (non-conductive dust)<br>Group IIIC (conductive dust) | — |

(1) Maximum surface temperature for dust applications is 90 °C (194 °F).
(2) Maximum surface temperature for dust applications is 90 °C (194 °F) for Cat. No. 855XM-CGMxxxDA* and 230 °F (110 °C) for Cat. No. 855XM-CGMxxxDB*.

**Table 140 - Class/Zone Ratings — US**

| Device | Rating |
|---|---|
| Horn | • Class I, Zone 2 AEx nA IIC T4 Gc (Ta -40…+50 °C [-40…+122 °F])<br>• Class I, Zone 22 AEx tc IIIC T90 °C Dc (Ta -40…+50 °C [-40…+122 °F]) |
| Horn with 5 J strobe | • Class I, Zone 2 AEx nA IIC T2 Gc (Ta -40…+50 °C [-40…+122 °F])<br>• Class I, Zone 22 AEx tc IIIC 120 °C Dc (Ta -40…+50 °C [-40…+122 °F]) |
| Horn with 10 J strobe | • Class I, Zone 2 AEx nA IIC T1 Gc (Ta -40…+50 °C [-40…+122 °F])<br>• Class I, Zone 2 AEx nA IIC T2 Gc for (Ta -40…+40 °C [-40…+104 °F])<br>• Class I, Zone 22 AEx tc IIIC 120 °C Dc (Ta -40…+50 °C [-40…+122 °F]) |

All horns (with and without strobe) comply with the following:

- ANSI/UL 60079-0-2013
- ANSI/UL 60079-15-2013
- ISA60079-31-2013

**Table 141 - Class/Zone Ratings — Canada**

| Device | Rating |
|---|---|
| Horn | • Ex nA IIC T4 Gc X (Ta -40…+50 °C [-40…+122 °F])<br>• Ex tc IIIC T90 °C Dc (Ta -40…+50 °C [-40…+122 °F])<br>• Class II Div 2 FG T5 (Ta -40…+50 °C [-40…+122 °F]) |
| Horn with 5 J strobe | • Ex nA IIC T2B Gc X (Ta -40…+50 °C [-40…+122 °F])<br>• Ex nA IIC T2C Gc X (Ta -40…+45 °C [-40…+113 °F])<br>• Ex tc IIIC T120 °C Dc (Ta -40…+50 °C [-40…+122 °F])<br>• Class II, Div 2 FG T4A (Ta -40…+50 °C [-40…+122 °F]) |
| Horn with 10 J strobe | • Ex nA IIC T1 Gc X (Ta -40…+50 °C [-40…+122 °F])<br>• Ex nA IIC T2 Gc X (Ta -40…+40 °C [-40…+104 °F])<br>• Ex tc IIIC T120 °C Dc (Ta -40…+50 °C [-40…+122 °F])<br>• Class II, Div 2 FG T4A (Ta -40…+50 °C [-40…+122 °F]) |

All horns (with and without strobe) comply with the following:

- CAN/CSA C22.2 No. 60079-0:11
- CAN/CSA C22.2 No. 60079-15:12
- CAN/CSA C22.2 No. 60079-31:12

**Table 142 - Class/Division Ratings — US and Canada**

| Device | Rating |
|---|---|
| Horn | • Class I Div 2, ABCD T3C (Ta -40…+70 °C [-40…+158 °F])<br>• Class I Div 2, ABCD T4 (Ta -40…+65 °C [-40…+149 °F])<br>• Class I Div 2, ABCD T4A (Ta -40…+50 °C [-40…+122 °F])<br>• Class II Div 2, FG T5 (Ta -40…+50 °C [-40…+122 °F])<br>• Class II Div 2, FG T6 (Ta -40…+45 °C [-40…+113 °F])<br>• Class III Div 1 & 2 (Ta -40…+50 °C [-40…+122 °F]) |
| Horn with 5 J strobe | • Class I Div 2, ABCD T2B (Ta -40…+70 °C [-40…+158 °F])<br>• Class I Div 2, ABCD T2C (Ta -40…+55 °C [-40…+131 °F])<br>• Class I Div 2, ABCD T2D (Ta -40…+40 °C [-40…+104 °F])<br>• Class II Div 2, FG T5 (Ta -40…+50 °C [-40…+122 °F])<br>• Class III Div 1&2 (Ta -40…+50 °C [-40…+122 °F]) |
| Horn with 10 J strobe | • Class I Div 2, ABCD T1 (Ta -40…+70 °C [-40…+158 °F])<br>• Class I Div 2, ABCD T2 (Ta -40…+50 °C [-40…+122 °F])<br>• Class II Div 2, FG T4A (Ta -40…+50 °C [-40…+122 °F])<br>• Class II Div 2, FG T5 (Ta -40…+104 °F [-40…+40 °C])<br>• Class III Div 1&2 (Ta -40…+50 °C [-40…+122 °F]) |

All horns (with and without strobe) comply with the following:

- ANSI/ISA 12.12.01 – 2013
- CSA C22.2 No. 213-M1987
- CSA C22.2 No. 157-92:2006

*Standards Compliance*

- c-UL-us Listed UL464/UL 1608 File No. E305533
- CSA C22.2 No. 213-M1987
- CSA C22.2 No. 157-92: 2006
- CE — European Explosive Atmosphere Directive 94/9/EC and European EMC Directive 2004/108/EC
- EN60079-0:2012/IEC60079-0: ed. 6.0 (2011-06)
- EN60079-15:2010/IEC60079-15: ed. 4.0 (2010-01)
- EN60079-31:2009/IEC60079-31:2009 ed. 1.0 (corr. 1 2009)

*Certifications*

- CE Marked
- UL Listed for:
  - Class I, Division 2, Groups A, B, C, and D
  - Class II, Division 2, Groups F and G
  - Class III, Division 1 and 2 (see Temperature Codes in Table 139 on page 109)
- ATEX/IECEx: Zone 2 Groups IIA, B, C and Zone 22 Groups IIIA, B, and C
- Ex Rating (Horn): II 3G Ex nA IIC T4 Gc and II 3D Ex tc IIIC T90 °C Dc (Ta -40…+50 °C [-40…+122 °F])
- Ex Rating (Horn with 5 J Strobe): II 3G Ex nA IIC T2 Gc and II 3D Ex tc IIIC T90 °C Dc (Ta -40…+50 °C [-40…+122 °F])
- Ex Rating (Horn with 10 J Strobe): II 3G Ex nA IIC T1 Gc and II 3D Ex tc IIIC T110 °C Dc (Ta -40…+50 °C [-40…+122 °F]); [II 3G Ex nA IIC T2 Gc for Ta -40…+40 °C (-40…+104 °F)]

## Tone Selection Table for 855XM

**Tone Selection –** To select the required first stage tone, set the tone switches 1…6 to the tone setting shown in the following table. The table also shows which 2nd, 3rd, and 4th stage tones are available for use with the selected first stage tone if more that one tone output is required.

| Stage 1 Tone No. | Tone Description | Tone Visual | Switch | | | | | | Stage 2 Alarm (S2) | Stage 3 Alarm (S3) | Stage 4 Alarm (S2+S3) |
|---|---|---|---|---|---|---|---|---|---|---|---|
| | | | 1 | 2 | 3 | 4 | 5 | 6 | | | |
| 1 | 1000 Hz PFEER toxic gas | 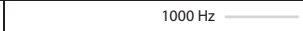 | 0 | 0 | 0 | 0 | 0 | 0 | 3 | 2 | 44 |
| 2 | 1200/500 @ 1 Hz DIN / PFEER P.T.A.P. | 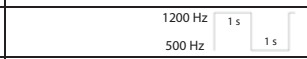 | 1 | 0 | 0 | 0 | 0 | 0 | 1 | 3 | 44 |
| 3 | 1000 @ 0.5 Hz(1 s on/1 s off) PFEER gen. alarm | 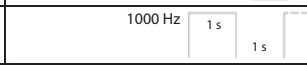 | 0 | 1 | 0 | 0 | 0 | 0 | 1 | 2 | 44 |
| 4 | 1.4…1.6 kHz 1 s, 1.6…1.4 kHz 0.5 s NF C 48-265 | 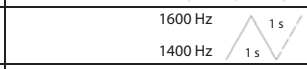 | 1 | 1 | 0 | 0 | 0 | 0 | 44 | 24 | 1 |
| 5 | 544 (100 ms)/440 (400 ms) NF S 32-001 |  | 0 | 0 | 1 | 0 | 0 | 0 | 52 | 19 | 1 |
| 6 | 1500/500 - (0.5 s on/0.5 s off) x3 + 1 s gap AS4428 | 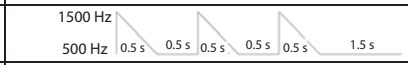 | 1 | 0 | 1 | 0 | 0 | 0 | 7 | 44 | 1 |
| 7 | 500…1500 Hz sweeping 2 s on/1 s off AS4428 | 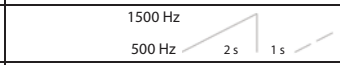 | 0 | 1 | 1 | 0 | 0 | 0 | 6 | 44 | 1 |
| 8 | 500/1200 Hz @ 0.26 Hz(3.3 s on/0.5 s off) Netherlands - NEN 2575 | 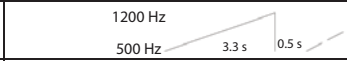 | 1 | 1 | 1 | 0 | 0 | 0 | 44 | 24 | 35 |
| 9 | 1000 (1 s on/1 s off) x7 + (7 s on/1 s off) IMO Code 1a | 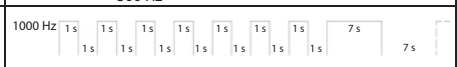 | 0 | 0 | 0 | 1 | 0 | 0 | 18 | 34 | 1 |
| 10 | | | 1 | 0 | 0 | 1 | 0 | 0 | 21 | 34 | 1 |
| 11 | 420 (0.5 s on/0.5 s off) x3 + 1 s gap ISO 8201 temporal pattern |  | 0 | 1 | 0 | 1 | 0 | 0 | 44 | 1 | 8 |
| 12 | 1000 (0.5 s on/0.5 s off) x3 + 1 s gap ISO 8201 temporal pattern | 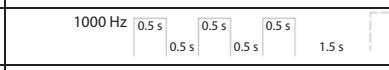 | 1 | 1 | 0 | 1 | 0 | 0 | 44 | 1 | 8 |
| 13 | 422/775 - (0.85 s on/0.5 s off) x3 + 1 s gap NFPA - temporal |  | 0 | 0 | 1 | 1 | 0 | 0 | 44 | 1 | 8 |
| 14 | 1000/2000 @ 1 Hz Singapore | 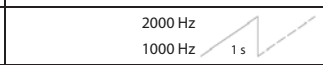 | 1 | 0 | 1 | 1 | 0 | 0 | 23 | 3 | 35 |
| 15 | 300 continuous | 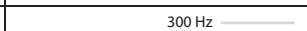 | 0 | 1 | 1 | 1 | 0 | 0 | 44 | 24 | 35 |
| 16 | 440 continuous | 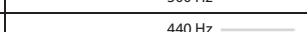 | 1 | 1 | 1 | 1 | 0 | 0 | 44 | 24 | 35 |
| 17 | 470 continuous | 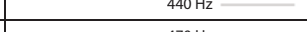 | 0 | 0 | 0 | 0 | 1 | 0 | 44 | 24 | 35 |
| 18 | 500 continuous IMO Code 2 (low) | 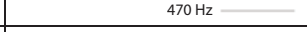 | 1 | 0 | 0 | 0 | 1 | 0 | 44 | 24 | 35 |
| 19 | 554 continuous |  | 0 | 1 | 0 | 0 | 1 | 0 | 64 | 24 | 35 |
| 20 | 660 continuous | 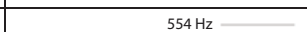 | 1 | 1 | 0 | 0 | 1 | 0 | 44 | 24 | 35 |
| 21 | 800 IMO Code 2 (high) | 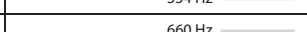 | 0 | 0 | 1 | 0 | 1 | 0 | 44 | 24 | 35 |
| 22 | 1200 continuous | 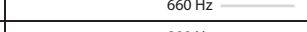 | 1 | 0 | 1 | 0 | 1 | 0 | 44 | 24 | 35 |
| 23 | 2000 continuous | 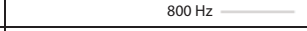 | 0 | 1 | 1 | 0 | 1 | 0 | 15 | 3 | 35 |
| 24 | 2400 continuous | 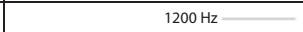 | 1 | 1 | 1 | 0 | 1 | 0 | 48 | 20 | 35 |
| 25 | 440 @ 0.83 Hz (50 cycles/min) intermittent | 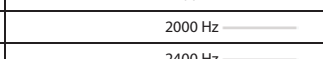 | 0 | 0 | 0 | 1 | 1 | 0 | 1 | 44 | 8 |
| 26 | 470 @ 0.9 Hz - 1.1 s intermittent | 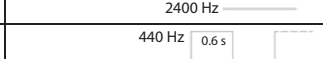 | 1 | 0 | 0 | 1 | 1 | 0 | 1 | 44 | 8 |
| 27 | 470 @ 5 Hz - (5 cycles/s) intermittent | 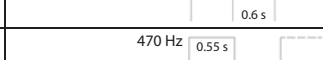 | 0 | 1 | 0 | 1 | 1 | 0 | 1 | 44 | 8 |
| 28 | 544 @ 1.14 Hz - 0.875 s intermittent | 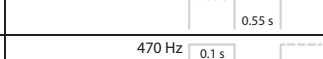 | 1 | 1 | 0 | 1 | 1 | 0 | 44 | 24 | 8 |
| 29 | 655 @ 0.875 Hz intermittent | 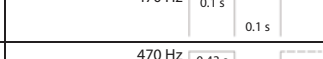 | 0 | 0 | 1 | 1 | 1 | 0 | 1 | 44 | 8 |
| 30 | 660 @ 0.28 Hz - 1.8 s on/1.8 s off intermittent | 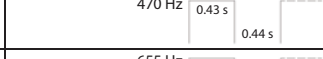 | 1 | 0 | 1 | 1 | 1 | 0 | 44 | 24 | 8 |
| 31 | 660 @ 3.34 Hz - 150 ms on/150 ms off intermittent | 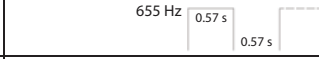 | 0 | 1 | 1 | 1 | 1 | 0 | 30 | 24 | 8 |
| 32 | 745 @ 1 Hz intermittent | 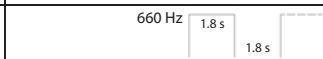 | 1 | 1 | 1 | 1 | 1 | 0 | 44 | 24 | 8 |
| 33 | 800 - 0.25 s on/1 s off intermittent | 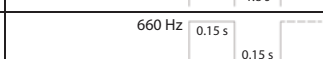 | 0 | 0 | 0 | 0 | 0 | 1 | 53 | 24 | 8 |

**Tone Selection –** To select the required first stage tone, set the tone switches 1…6 to the tone setting shown in the following table. The table also shows which 2nd, 3rd, and 4th stage tones are available for use with the selected first stage tone if more that one tone output is required.

| Stage 1 Tone No. | Tone Description | Tone Visual | Switch | | | | | | Stage 2 | Stage 3 | Stage 3 |
|---|---|---|---|---|---|---|---|---|---|---|---|
| | | | 1 | 2 | 3 | 4 | 5 | 6 | | | |
| 34 | 800 @ 2 Hz IMO Code 3.a (high) intermittent |  | 1 | 0 | 0 | 0 | 0 | 1 | 56 | 24 | 8 |
| 35 | 1000 @ 1 Hz intermittent | 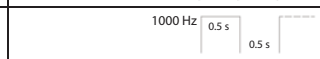 | 0 | 1 | 0 | 0 | 0 | 1 | 44 | 24 | 8 |
| 36 | 2400 @ 1 Hz intermittent | 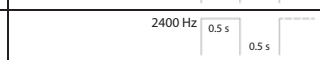 | 1 | 1 | 0 | 0 | 0 | 1 | 21 | 24 | 8 |
| 37 | 2900 @ 5 Hz intermittent | 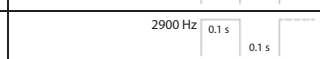 | 0 | 0 | 1 | 0 | 0 | 1 | 53 | 24 | 8 |
| 38 | 363/518 @ 1 Hz alternating | 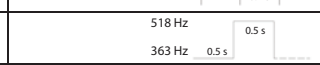 | 1 | 0 | 1 | 0 | 0 | 1 | 1 | 8 | 19 |
| 39 | 450/500 @ 2 Hz alternating | 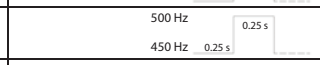 | 0 | 1 | 1 | 0 | 0 | 1 | 1 | 8 | 19 |
| 40 | 554/440 @ 1 Hz alternating | 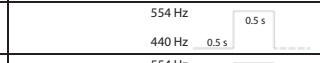 | 1 | 1 | 1 | 0 | 0 | 1 | 44 | 24 | 19 |
| 41 | 554/440 @ 0.625 Hz alternating | 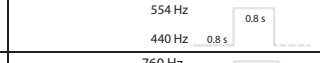 | 0 | 0 | 0 | 1 | 0 | 1 | 1 | 8 | 19 |
| 42 | 561/760 @ 0.83 Hz (50 cycles/min) alternating | 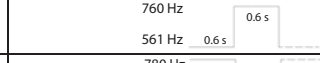 | 1 | 0 | 0 | 1 | 0 | 1 | 1 | 8 | 19 |
| 43 | 780/600 @ 0.96 Hz alternating | 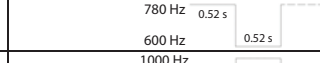 | 0 | 1 | 0 | 1 | 0 | 1 | 1 | 8 | 19 |
| 44 | 800/1000 @ 2 Hz alternating | 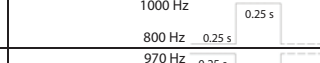 | 1 | 1 | 0 | 1 | 0 | 1 | 5 | 24 | 19 |
| 45 | 970/800 @ 2 Hz alternating | 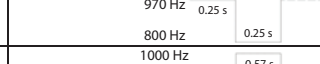 | 0 | 0 | 1 | 1 | 0 | 1 | 1 | 8 | 19 |
| 46 | 800/1000 @ 0.875 Hz alternating | 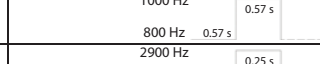 | 1 | 0 | 1 | 1 | 0 | 1 | 53 | 24 | 19 |
| 47 | 2400/2900 @ 2 Hz alternating | 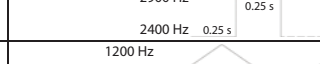 | 0 | 1 | 1 | 1 | 0 | 1 | 57 | 24 | 19 |
| 48 | 500/1200 @ 0.3 Hz sweeping | 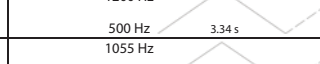 | 1 | 1 | 1 | 1 | 0 | 1 | 44 | 24 | 12 |
| 49 | 560/1055 @ 0.18 Hz sweeping | 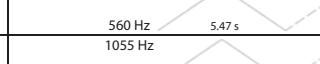 | 0 | 0 | 0 | 0 | 1 | 1 | 44 | 24 | 12 |
| 50 | 560/1055 @ 3.3 Hz sweeping | 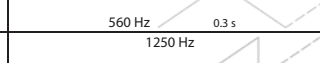 | 1 | 0 | 0 | 0 | 1 | 1 | 44 | 24 | 12 |
| 51 | 600/1250 @ 0.125 Hz sweeping | 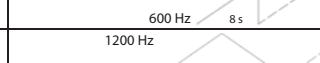 | 0 | 1 | 0 | 0 | 1 | 1 | 44 | 24 | 12 |
| 52 | 660/1200 @ 1 Hz sweeping | 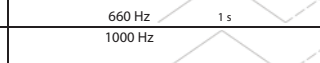 | 1 | 1 | 0 | 0 | 1 | 1 | 64 | 24 | 12 |
| 53 | 800/1000 @ 1 Hz sweeping | 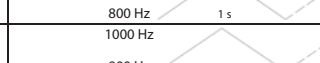 | 0 | 0 | 1 | 0 | 1 | 1 | 56 | 24 | 12 |
| 54 | 800/1000 @ 7 Hz sweeping | 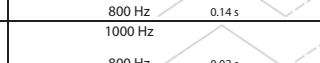 | 1 | 0 | 1 | 0 | 1 | 1 | 57 | 24 | 12 |
| 55 | 800/1000 @ 50 Hz sweeping | 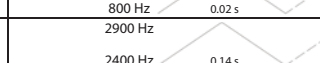 | 0 | 1 | 1 | 0 | 1 | 1 | 54 | 24 | 12 |
| 56 | 2400/2900 @ 7 Hz sweeping | 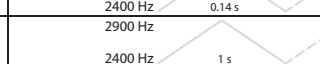 | 1 | 1 | 1 | 0 | 1 | 1 | 57 | 24 | 12 |
| 57 | 2400/2900 @ 1 Hz sweeping | 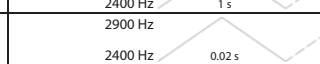 | 0 | 0 | 0 | 1 | 1 | 1 | 47 | 24 | 12 |
| 58 | 2400/2900 @ 50 Hz sweeping | 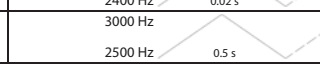 | 1 | 0 | 0 | 1 | 1 | 1 | 54 | 24 | 12 |
| 59 | 2500/3000 @ 2 Hz sweeping | 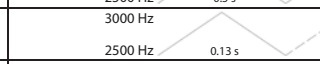 | 0 | 1 | 0 | 1 | 1 | 1 | 44 | 24 | 12 |
| 60 | 2500/3000 @ 7.7 Hz sweeping | 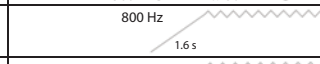 | 1 | 1 | 0 | 1 | 1 | 1 | 44 | 24 | 12 |
| 61 | 800 motor siren | 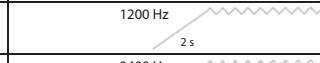 | 0 | 0 | 1 | 1 | 1 | 1 | 44 | 24 | 12 |
| 62 | 1200 motor siren | 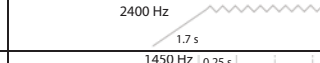 | 1 | 0 | 1 | 1 | 1 | 1 | 44 | 24 | 12 |
| 63 | 2400 motor siren | 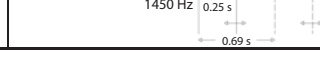 | 0 | 1 | 1 | 1 | 1 | 1 | 44 | 24 | 12 |
| 64 | Simulated bell |  | 1 | 1 | 1 | 1 | 1 | 1 | 44 | 21 | 12 |

## Approximate Dimensions — Bulletin 855X

Dimensions in millimeters (inches). Dimensions are not intended to be used for manufacturing purposes.

**855XM Hazardous Location Metal Horn**

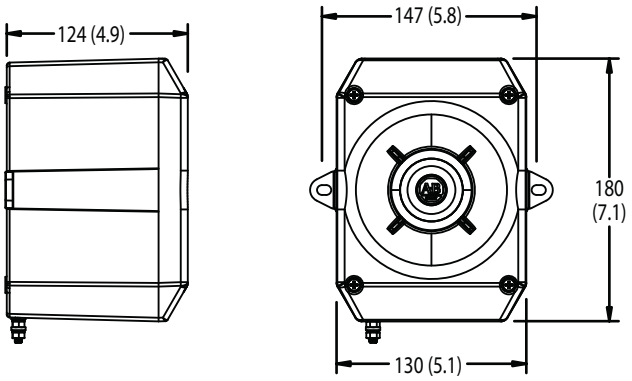


**855XM-C Hazardous Location Metal Horn with Xenon Strobe**

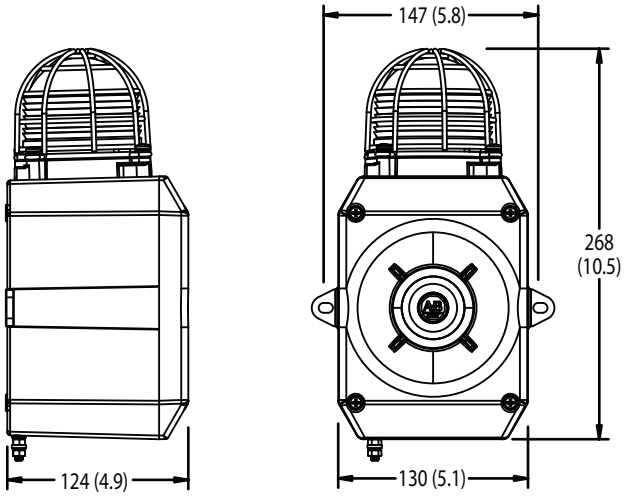

REVIEWED BY CONTRACTOR

Kudlik Construction Ltd.

NAME: Sandra Rousseau P.Eng

DATE: Jul 17, 2018

NORCLAIR
MÉCANIQUE DE PROCÉDÉ

# SHOP DRAWINGS

**DA-IC-08** (Building temperature transmitters)

**Date :** 2018-07-17

| **Information general** | |
|---|---|
| Project : **WWTP UPGRADE - IQALUIT** | |
| Client : Kudlik Construction Ltd.<br>To : Sandra Rousseau P.Eng., Project Manager | Project number : **2018-062**<br>E-mail : srousseau@kudlik.biz |
| Contractor : **Norclair inc.** | Project number Norclair : **P1039** |
| Address : 1100, Mountain Masson, Laval, QC, Canada H7E 4P2 | |
| Project Manager : Dominic Papineau, Project Manager | E-mail: dpapineau@norclair.ca |
| Phone : 450-688-4012 # 720 | Cell. : 514-409-1832 |

| **Information, subcontractor or supplier** | |
|---|---|
| Sub/supplier : Thermo Kinetics | |
| Contact : Normand Hadd | Phone : (514) 856-0370 |

| **Information on the equipment** | |
|---|---|
| Speciality : **Instrumentation and Control** | |
| Equipment : Building temperature transmitters | |
| Drawing reference : | |
| Specification reference : : **47 30 02** (Page 10 / xx) | Division : |
| Article : | Number of pages : 15 |

**CONSULTANT APPROVAL**

Comments within

STANTEC PROJECT #: 110126045

SUBMITTAL # DA-IC-08 (2018-07-17)

This review by Stantec is for general conformance with the design concept of Stantec's design of the:

☐ Architectural ☐ Structural ☐ Mechanical ☐ Electrical ☑ Other Instrumentation

component(s) only and does not mean that Stantec has verified or approves the shop drawing(s). The Contractor remains solely responsible for the shop drawing(s) and this review by Stantec does not relieve the Contractor of the Contractor's responsibility for errors or omissions in the shop drawing(s) or for meeting all requirements of the contract documents. This review does not mean that Stantec approves the detailed design inherent in the shop drawing, responsibility for which shall remain with the Contractor submitting same, nor does this review mean that Stantec accepts any deviation of the shop drawing(s) from the contract documents. The Contractor is responsible for confirming all dimensions and correlating them at the job site, for all construction means, methods and techniques, and for coordination of construction work of all trades, including coordination of all shop drawings.

Stantec

☐ REVIEWED

☑ REVIEWED, AS NOTED

☐ REVISE AND RESUBMIT

☐ NOT REVIEWED

DATE 2018-JUL-26

BY David Hutchison, P.Eng.

1100, montée Masson
Laval, QC, Canada
H7E 4P2

Phone. : 450-688-4012
Fax : 450-661-6341
E-Mail : info@norclair.ca
www.norclair.ca

PRODUCT REFERENCE GUIDE

THERMO KINETICS
MEASUREMENT & CONTROL

6x
To be mounted on wall
for room temperature
monitoring

# Resistance Temperature Detectors

## Probes & Assemblies

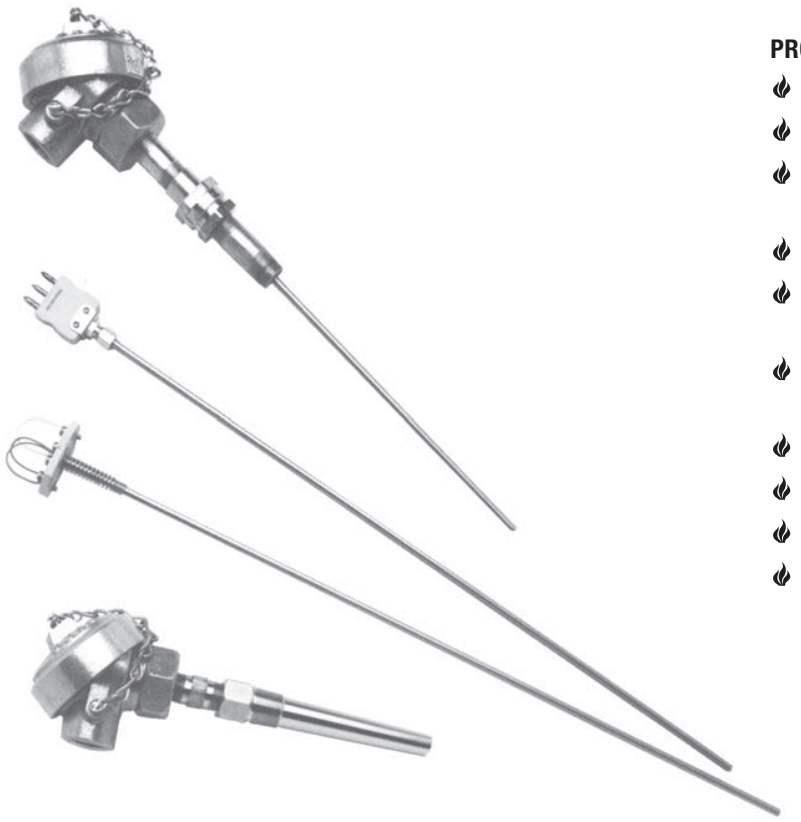

**PRODUCT FEATURES**

- Rugged Construction
- Accurate and Stable Probes
- General Purpose, Tip Sensitive, High Temperature and High Vibration Probes and Assemblies
- 2, 3 and 4 Wire Configurations
- General Purpose or Spring Loaded Mounting, with or without Thermowells
- Nipple, Nipple-Union-Nipple or Bushing Extension Hardware
- CSA Approved Assemblies for Hazardous Locations
- Averaging RTDs
- Custom Configurations
- Head Mounted Transmitter Options

**Please visit our website for our other Product Literature Guides : T-PAK® Thermocouples, Industrial Thermocouples, Thermowells, Protection Tubes, Calibration Services**


**toll free 1-800-268-0967 • www.thermo-kinetics.com**

**Toronto • Montréal • Québec • Calgary • Edmonton • Vancouver**



® Registered Trademark of Thermo-Kinetics Company Limited

## GENERAL

Resistance Temperature Detectors (RTDs) are used for industrial temperature measurements where high accuracy and long-term stability are required. The 100 ohm platinum element is the most common for industrial applications. The 3-wire lead configuration is used for industrial temperature measurements and provides adequate compensation for leadwire resistance. The 4-wire arrangement fully eliminates all leadwire effects and is used in applications where high accuracy is required.

## TOLERANCE & ACCURACY

**Tolerance** of an RTD is a measure of its conformity to the ITS-90 Temperature-Resistance curve, and is normally expressed as an allowable deviation from the normal resistance at 0 ºC. It consists of a manufacturing tolerance on the reference point (eg: how close is the resistance to 100 Ω at 0 ºC) and a materials tolerance on the Temperature Coefficient of Resistance (eg: how close does the wire conform to an alpha of .00385).

At the reference temperature, only the manufacturing tolerance applies (since this is where the RTD element is "adjusted" to 100 Ω). At other temperatures, the materials tolerance must be added. As the temperature increases or decreases, the tolerance becomes wider. At higher temperatures, the material tolerance has the larger influence.

**DIN/IEC 60751 (replaces DIN 43760) defines Class B and Class A tolerances.**

| Temp | Resistance | Class B | | Class A | |
|---|---|---|---|---|---|
| ºC | Ω | Ω | ºC | Ω | ºC |
| -200 | 18.52 | ±0.56 | ±1.3 | ±0.24 | ±0.55 |
| -100 | 60.26 | ±0.32 | ±0.8 | ±0.14 | ±0.35 |
| 0 | 100.00 | ±0.12 | ±0.3 | ±0.06 | ±0.15 |
| 100 | 138.51 | ±0.30 | ±0.8 | ±0.13 | ±0.35 |
| 200 | 176.86 | ±0.48 | ±1.3 | ±0.20 | ±0.55 |
| 300 | 212.05 | ±0.64 | ±1.8 | ±0.27 | ±0.75 |
| 400 | 247.09 | ±0.79 | ±2.3 | ±0.33 | ±0.95 |
| 500 | 280.98 | ±0.93 | ±2.8 | ±0.38 | ±1.15 |
| 600 | 313.71 | ±1.06 | ±3.3 | ±0.43 | ±1.35 |
| 650 | 329.64 | ±1.13 | ±3.6 | ±0.46 | ±1.45 |
| 700 | 345.28 | ±1.17 | ±3.8 | -- | -- |
| 800 | 375.70 | ±1.28 | ±4.3 | -- | -- |
| 850 | 390.48 | ±1.34 | ±4.6 | -- | -- |

NOTE: Tolerances apply to the element, not to final probe.

**Class B**: ± (0.30 + .005 x |t|) ºC
**Class A**: ± (0.15 + .002 x |t|) ºC

|t| = absolute value of temperature in ºC

Elements with narrower tolerances are available (eg: 1/3 B, 1/5 B, etc). No standard exists for these fractional tolerance elements; it depends on the manufacturer of the element. For example, a 1/10 B element would normally have a manufacturing tolerance of 0.03 ºC, but the material tolerance would depend on the manufacturer's choice of wire (class B, class A or other).

**Accuracy** is dependent on the tolerance of the RTD, the measurement temperature, the accuracy of the readout device, the effects of the interconnecting leadwire and the installation.

For highest accuracy use a calibrated Class B element with a precision transmitter (or meter) that can be characterized to match the RTD calibration.

Platinum elements with other temperature-resistance curves are available (eg: JIS). Copper and Nickel elements are also available as replacements to match existing instrumentation.

## SPECIFICATIONS

| | |
|---|---|
| ELEMENT MATERIAL: | Platinum, DIN/IEC 60751 |
| ELEMENT RESISTANCE: | 10, 100, 500, 1000 Ω |
| TOLERANCE: | ±0.12% of resistance at 0 ºC (Class B)<br>±0.06% of resistance at 0 ºC (Class A) |
| STABILITY: | 0.05% of resistance/year at 0 ºC |
| TEMPERATURE COEFFICIENT: | .00385 Ω/Ω/ºC |
| TEMPERATURE RANGE: | -50 ºC to 250 ºC (R1,R2)<br>-200 ºC to 500 ºC (R3,R5)<br>-200 ºC to 550 ºC (R4) |
| LEAD CONFIGURATION: | 2, 3 or 4 wire |
| LEAD MATERIAL: | Stranded copper for 260 ºC<br>Stranded ni-clad copper for 500 ºC<br>Solid nickel for 550 ºC |
| LEAD INSULATION: | Teflon for 260 ºC probes<br>Fiberglass for 500 ºC probes<br>MgO for 550 ºC probes |
| PROBE MATERIAL: | 316 stainless steel |
| PROBE TIP: | Stainless steel<br>Copper alloy for tip sensitive probe |
| PROBE SIZE: | 0.25" OD |
| VIBRATION: | 20g over 10 to 1K Hz |
| RESPONSE TIME: | 30 sec nominal for SS tip<br>15 sec nominal for copper tip |
| SELF HEATING: | 20 mW/ºC for SS tip<br>40 mW/ºC for copper tip |
| PRESSURE RATING: | 500 psig over temperature range |
| INSULATION RESISTANCE: | 1000 MΩ at 500 VDC |

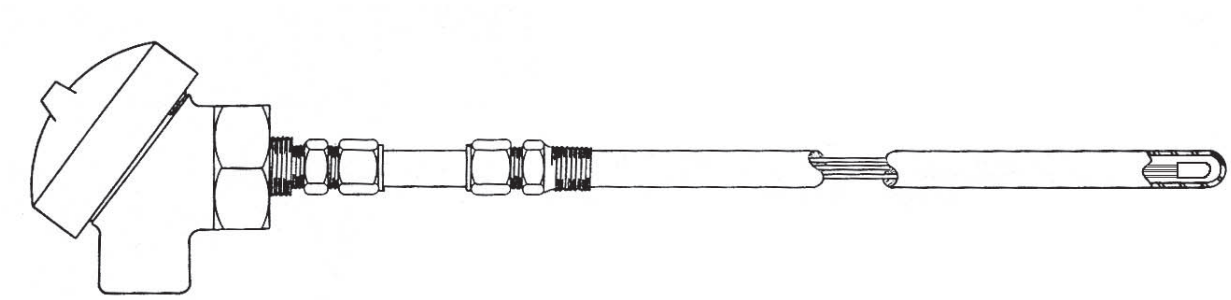

## ORDERING INFORMATION

A 6-part catalog number is used to specify a complete RTD probe.

**R21 - D100A3 - 012.0 - 68 - A024 - 03**

1: Style Code
2: Element Code
3: Length
4: Termination Code
5: Leadwire Code
6: Option Code

**Example:** The above catalog number identifies a general purpose RTD probe with a .250" OD stainless steel sheath 12" long, a 100 ohm platinum (DIN) element with 3-lead configuration, a heavy duty cast iron head and a stainless steel compression fitting with 1/4" NPT.

## 1: STYLE CODE

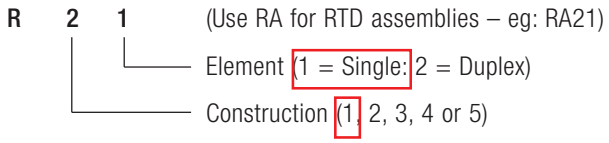


R1x: General Purpose probe, 0.250" OD, 316 SS sheath and tip, internal leads are teflon insulated, stranded copper (22 ga for simplex, 24 ga for duplex), 260°C maximum temperature.

R2x: Tip Sensitive probe, 0.250" OD, 316 SS sheath, copper alloy tip, internal leads are teflon insulated, stranded copper (22 ga simplex, 24 ga for duplex), 260°C maximum temperature

R3x: Medium Temperature probe, 0.250" OD, 316 SS sheath & tip, internal leads are fiberglass insulated, stranded ni-clad copper (22 ga for simplex, 24 ga for duplex), 500°C maximum temperature.

R4x: High Temperature probe, 0.250" OD, 316 SS sheath & tip, internal leads are solid nickel, MgO insulated, 600°C maximum temperature. This construction can be supplied in long lengths and coiled.

R5x: High Vibration probe, 0.250" OD, 316 SS sheath & tip, internal leads are solid nickel, MgO insulated, 500°C maximum temperature.

Other constructions, diameters, materials, etc, are available on special order. Contact factory for details.

## 2: ELEMENT CODE

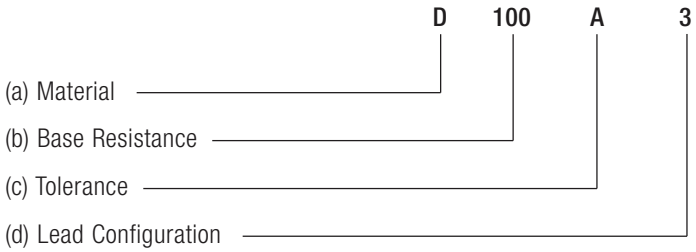


(a) MATERIAL:
D: Platinum (IEC) · = 0.003850 Ω/Ω/°C
S: Platinum (JIS) · = 0.003916 Ω/Ω/°C

(b) BASE RESISTANCE:
10, 100, 500, 1000 for D
100 for S

(c) TOLERANCE:
A: ±0.12% of resistance at 0 °C (Standard)
E: ±0.06% of resistance at 0 °C (Optional)
F: ±0.04% of resistance at 0 °C (Optional)*
H: ±0.012% of resistance at 0 °C (Optional)(range of 0-100 °C only)*

* available in 4-wire lead configuration only.

## 2: ELEMENT CODE (cont'd)

(d) LEADWIRE CONFIGURATION:

**2-Wire (Code 2)**

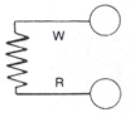


The 2-wire connection provides no lead wire compensation. Reasonable accuracy can only be obtained if leadwire resistance is negligible compared to the ohms/degree change of the RTD.

**3-Wire (Code 3)**

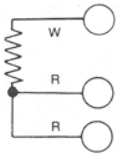


The 3-wire connection allows for leadwire compensation in Wheatstone bridge and constant current circuits. These compensating circuits assume that all leads are of equal resistance. This arrangement is most common for industrial temperature measurements.

**4-Wire (Code 4)**

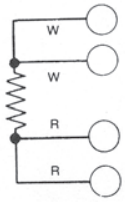


The 4-wire, type A connection enables complete compensation for the effect of leadwire resistance in potentiometric or compensated bridge measurements. This arrangement is normally used in metrology applications for measurements of the highest precision.

**4-Wire Type B (Code 5)**

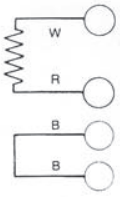


The 4-wire, type B connection is essentially a 2-lead RTD with a compensating loop, and is used in bridge-type differential temperature measurements on equal-ratio bridge networks.

## 3. LENGTH

Specify probe length ("X") in inches (eg: 012.0 = 12") 3in
Minimum recommended length: 3"

## 4: TERMINATION CODE

| TERMINATION | CODE | DESCRIPTION |
|---|---|---|
| 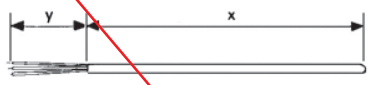 | 10 | 22 ga insulated, stranded copper leads.<br>(Teflon for R1x & R2x; Fiberglass for R3x & R4x.)<br>Specify length Y in inches under "LEADWIRE"<br>'Construction Type' O (standard length = 6") |
| 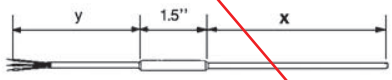 | 11 | Potting adaptor with flexible leadwire.<br>Specify 'Construction Type' and length (Y) under "LEAD WIRE"<br>Use "OPTIONS" to specify fittings, connectors, etc. |
| 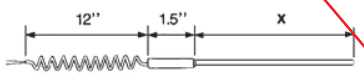 | 12 | Retractile cable, 100°C PVC jacket, 1' coiled, extends to 5.'<br>Specify Y (coiled length) under "LEADWIRE" (Pg 8).<br>Use 'Construction Type' O. (standard length = 1') |
| 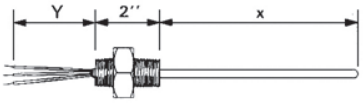 | 15<br>16<br>17<br>18<br>19 | 1/2 x 1/2 MOUNTING ADAPTER<br>1/2" x 1/2" NPT, S/S Specify "Y" length (Std = 6")<br>Welded to Probe<br>Spring Loaded<br>Spring Loaded, O-Ring<br>Compression Bolt, Metal Ferrule<br>Compression Bolt, Teflon Seal |
| 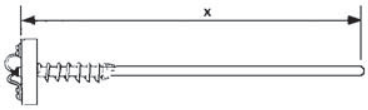 | 20<br>21<br>22<br>23<br>24 | For 14-0008/14-0022 Heads (X = A + N + 2.25").<br>For 14-0304/7, 14-0804/7 Heads (X = A + N + 2.00").<br>For 14-1080A/1080S/1086S, 14-0018 Heads (X = A + N + 1.75").<br>For 14-0007 Head (X = A + N + 2.25").<br>For 14-1304/7 Heads (X = A + N + 2.25"). |
| 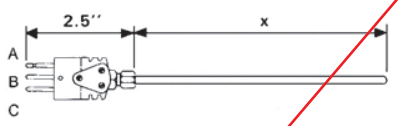 | 25<br>27 | 3-Pole Plug (200°C)<br>High-Temp 3-Pole plug (425°C) |
|  | 30<br>31 | Open type, micro terminal block (200°C)<br>High-Temp open type micro terminal block (425°C) |
| 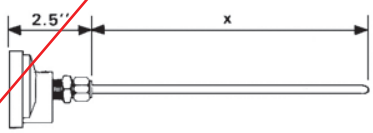 | 35<br>36<br>37<br>38 | Miniature weatherproof plastic terminal head Brass Comp Fitting (200°C)<br>High-Temp miniature W/P plastic terminal head Brass Comp Fitting(425°C)<br>Miniature weatherproof plastic terminal head S/S Comp Fitting (200°C)<br>High-Temp miniature W/P plastic terminal head S/S Comp Fitting(425°C) |

## 4: TERMINATION CODE (cont'd)

Screw Cover Terminal Head
Mounted to probe with compression fitting

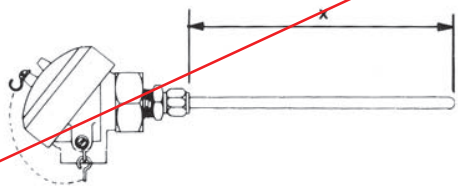


| HEAD | | | | | Compression Fitting | |
|---|---|---|---|---|---|---|
| Style | Material | Type*2 | Haz Loc*3 | Fig | Brass | Stainless |
| General Purpose | Aluminum | 4 | -- | 1 | 65 | 67 |
| | Cast Iron | 4 | -- | 1 | 66 | 68 |
| | Stainless | 4X | -- | 3 | -- | 64 |
| Heavy Duty | Aluminum | 4 | B C D | 4 | 42 | 43 |
| | Cast Iron | -- | -- | 2 | 46 | 48 |
| | Stainless | 4X | B C D | 4 | -- | 44 |

Screw Cover Terminal Head
1/2" X 1/2" NPT SS Mounting Adapter
Fixed probe

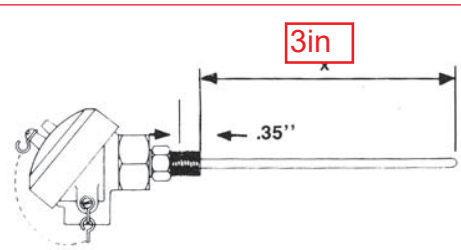


| HEAD | | | | | Welded | Compression Adapter |
|---|---|---|---|---|---|---|
| Style | Material | Type*2 | Haz Loc*3 | Fig | | |
| General Purpose | Aluminum | 4 | -- | 1 | 70 | 91 |
| | Cast Iron | 4 | -- | 1 | 75 | 93 |
| | Stainless | 4X | -- | 3 | C1 | C6 |
| Heavy Duty | Aluminum | 4 | B C D | 4 | A1 | A6 |
| | Cast Iron | -- | -- | 2 | 55 | 83 |
| | Stainless | 4X | B C D | 4 | B1 | B6 |

4x

Thread engagement:
.35" for 1" NPT

If used with a thermowell
X = TW bore length 1/2"

2x, TT-01-950 & TT-01-951

*1 Cast Iron body, Aluminum cap
*2 CSA or Nema type
*3 Heads meet requirements for Class 1 Div 1 & 2 (Class I Zone 1 & 2).
For Explosion Proof assemblies, refer to RTD Assemblies starting on page 11.

4x

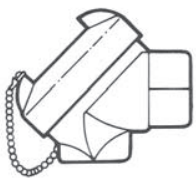
Fig. 1

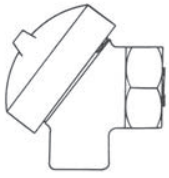
Fig. 2

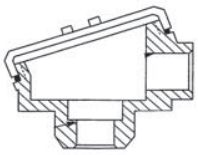
Fig. 3

2x

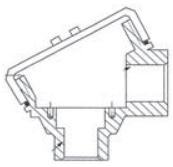
Fig.4

## 4: TERMINATION CODE (cont'd)

Screw Cover Terminal Head
1/2" X 1/2" NPT SS Mounting Adapter
Spring-Loaded Probe

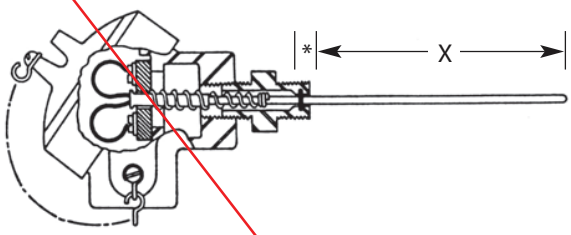


Note: If used with a thermowell,
X = A (bore length of thermowell)

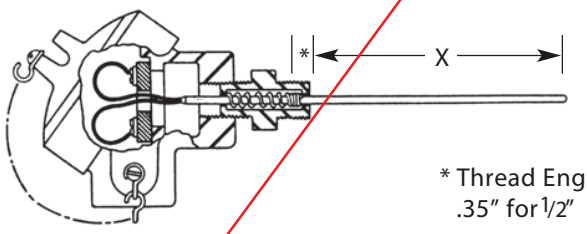


* Thread Engagement
.35" for 1/2" NPT

| HEAD | | | | | CAPTIVE T/B | | SPRG-LOADED ADAPTER | |
|---|---|---|---|---|---|---|---|---|
| Style | Material | Type*1 | Haz Loc*2 | Fig | Std | O-Ring | Std | O-Ring |
| General Purpose | Aluminum | 4 | -- | 1 | 71 | 72 | 73 | 74 |
| | Cast Iron | 4 | -- | 1 | 76 | 77 | 78 | 79 |
| | Stainless | 4X | -- | 3 | C2 | C3 | C4 | C5 |
| Heavy Duty | Aluminum | 4 | B C D | 4 | A2 | A3 | A4 | A5 |
| | Cast Iron | -- | -- | 2 | 56 | 57 | 58 | 59 |
| | Stainless | 4X | B C D | 4 | B2 | B3 | B4 | B |

Division 2 (Zone 2) Assemblies
Remote Mounted Head
Flexible Armour **

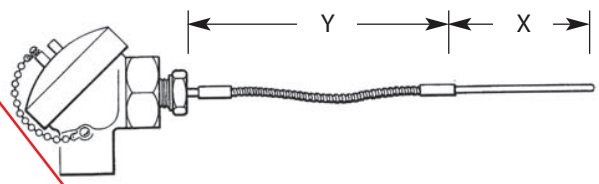


| HEAD | | | | Transmitter | Class I*2 | Class II*3 |
|---|---|---|---|---|---|---|
| Style | Material | Type*1 | Fig | | | |
| Heavy Duty | Aluminum | 4 | 4 | None | 9K | 8K |
| | | | 4 | TK 381 | 9T | 8T |
| | | | 4 | IPAQ-H | 9E | 8E |
| | Stainless | 4X | 4 | None | 9L | 8L |
| | | | 4 | TK 381 | 9U | 8U |
| | | | 4 | IPAQ-H | 9F | 8F |

*1 CSA or Nema type
*2 Head meets requirements for Class 1 Div 1 & 2 (Class I Zone 1 & 2).
For Explosion Proof assemblies, refer to RTD Assemblies starting on page 11.
*3 Armour is PVC jacketed for Class II applications.

## 5: LEADWIRE CODE

Leadwire extension can be accomplished by extending the internal leads or by attaching a jacketed cable (via a potting adaptor).

CONTRUCTION TYPE

| CONSTR. CODE | LEADWIRE EXTENSION | FOR STYLE CODE | REQUIRED TERM CODE |
|---|---|---|---|
| O | Teflon Insulated Leadwire, No Jacket | R1, R2 | 10 |
| | Teflon Insulated Leadwire, No Jacket | R3, R4, R5 | 11 |
| Q | F/G Insulated Leadwire, No Jacket | R1, R2, R3 | 10 |
| | F/G Insulated Leadwire, No Jacket | R4, R5 | 11 |
| P | PVC Jacketed Cable, Unshielded | All | 11 |
| R | PVC Jacketed Cable, Shielded | All | 11 |
| T | Teflon Jacketed Cable, Shielded | All | 11 |
| W | Teflon Jacketed Cable, Shielded, SS Overbraid | All | 11 |
| A | Flex Armour (3/16" ID), Teflon Insluated Leads | All | 11 |
| B | Flex Armour (3/16" ID), PVC Jacketed, Teflon Insulated Leads | All | 11 |
| C | Flex Armour (3/16" ID), F.G Insulated Leads | R3, R4, R5 | 11 |
| D | Flex Armour (3/16" ID), PVC Jacketed, F/G Insulated Leads | R3, R4, R5 | 11 |

Use O000 when leadwire not applicable (for Term Codes other than 10 & 11).

## 6: OPTION CODE

| CODE | DESCRIPTION |
|---|---|
| 000 | None |
| 2 | Brass Compression Fitting (Metal Ferrule) –1/4" NPT* |
| 3 | Brass Compression Fitting (Teflon Seal) – 1/4" NPT* |
| 4 | Brass Compression Fitting (Metal Ferrule) –1/2" NPT |
| 5 | Brass Compression Fitting (Teflon Seal) –1/2" NPT |
| 6 | S.S. Compression Fitting (Metal Ferrule) – 1/4" NPT* |
| 7 | S.S. Compression Fitting (Teflon Seal) – 1/4" NPT* |
| 8 | S.S. Compression Fitting (Metal Ferrule) – 1/2" NPT |
| 9 | S.S. Compression Fitting (Teflon Seal) – 1/2" NPT |
| C | Transmitter (or Indicator) Configuration |
| D | 3-Pole Plug (at end of leadwire) |
| E | 3-Pole Plug & Mating Jack (at end of leadwire) |
| F | Brazed Transition |
| G | Self Grip Spring |
| H | Spade Lugs (at end of leadwire) |
| J | 1/2" x 1/2" NPT Adapter, Welded to Probe |
| K | 1/2" x 1/2" NPT Spring-Loaded Adapter |
| L | 1/2" x 1/2" NPT Spring-Loaded Adapter with O-Ring Seal |
| M | 1/2" x 1/2" NPT Compression Adaptor, Fixed (Metal Ferrule) |
| N | 1/2" x 1/2" NPT Compression Adaptor, Adjustable (Teflon Seal) |
| P | Paper Tag |
| S | Stainless Steel Tag |
| X | Special |

* For other NPT sizes, use Option X & specify size.

## RESISTANCE VS TEMPERATURE TABLE – DIN/IEC 60751, Ro = 100Ω TCR = .00385Ω/Ω/ºC

| Temp (ºC) | 0 | 1 | 2 | 3 | 4 | 5 | 6 | 7 | 8 | 9 |
|---|---|---|---|---|---|---|---|---|---|---|
| **0** | 100.000 | 100.391 | 100.781 | 101.172 | 101.562 | 101.953 | 102.343 | 102.733 | 103.123 | 103.513 |
| **10** | 103.903 | 104.292 | 104.682 | 105.071 | 105.460 | 105.849 | 106.238 | 106.627 | 107.016 | 107.405 |
| **20** | 107.794 | 108.182 | 108.570 | 108.959 | 109.347 | 109.735 | 110.123 | 110.510 | 110.898 | 111.286 |
| **30** | 111.673 | 112.060 | 112.447 | 112.835 | 113.221 | 113.608 | 113.995 | 114.382 | 114.768 | 115.155 |
| **40** | 115.541 | 115.927 | 116.313 | 116.699 | 117.085 | 117.470 | 117.856 | 118.241 | 118.627 | 119.012 |
| **50** | 119.397 | 119.782 | 120.167 | 120.552 | 120.936 | 121.321 | 121.705 | 122.090 | 122.474 | 122.858 |
| **60** | 123.242 | 123.626 | 124.009 | 124.393 | 124.777 | 125.160 | 125.543 | 125.926 | 126.309 | 126.692 |
| **70** | 127.075 | 127.458 | 127.840 | 128.223 | 128.605 | 128.987 | 129.370 | 129.752 | 130.133 | 130.515 |
| **80** | 130.897 | 131.278 | 131.660 | 132.041 | 132.422 | 132.803 | 133.184 | 133.565 | 133.946 | 134.326 |
| **90** | 134.707 | 135.087 | 135.468 | 135.848 | 136.228 | 136.608 | 136.987 | 137.367 | 137.747 | 138.126 |
| **100** | 138.505 | 138.885 | 139.264 | 139.643 | 140.022 | 140.400 | 140.779 | 141.158 | 141.536 | 141.914 |
| **110** | 142.293 | 142.671 | 143.049 | 143.426 | 143.804 | 144.182 | 144.559 | 144.937 | 145.314 | 145.691 |
| **120** | 146.068 | 146.445 | 146.822 | 147.198 | 147.575 | 147.951 | 148.328 | 148.704 | 149.080 | 149.456 |
| **130** | 149.832 | 150.208 | 150.583 | 150.959 | 151.334 | 151.710 | 152.085 | 152.460 | 152.835 | 153.210 |
| **140** | 153.584 | 153.959 | 154.333 | 154.708 | 155.082 | 155.456 | 155.830 | 156.204 | 156.578 | 156.952 |
| **150** | 157.325 | 157.699 | 158.072 | 158.445 | 158.818 | 159.191 | 159.564 | 159.937 | 160.309 | 160.682 |
| **160** | 161.054 | 161.427 | 161.799 | 162.171 | 162.543 | 162.915 | 163.286 | 163.658 | 164.030 | 164.401 |
| **170** | 164.772 | 165.143 | 165.514 | 165.885 | 166.256 | 166.627 | 166.997 | 167.368 | 167.738 | 168.108 |
| **180** | 168.478 | 168.848 | 169.218 | 169.588 | 169.958 | 170.327 | 170.696 | 171.066 | 171.435 | 171.804 |
| **190** | 172.173 | 172.542 | 172.910 | 173.279 | 173.648 | 174.016 | 174.384 | 174.752 | 175.120 | 175.488 |
| **200** | 175.856 | 176.224 | 176.591 | 176.959 | 177.326 | 177.693 | 178.060 | 178.427 | 178.794 | 179.161 |
| **210** | 179.528 | 179.894 | 180.260 | 180.627 | 180.993 | 181.359 | 181.725 | 182.091 | 182.456 | 182.822 |
| **220** | 183.188 | 183.553 | 183.918 | 184.283 | 184.648 | 185.013 | 185.378 | 185.743 | 186.107 | 186.472 |
| **230** | 186.836 | 187.200 | 187.564 | 187.928 | 188.292 | 188.656 | 189.019 | 189.383 | 189.746 | 190.110 |
| **240** | 190.473 | 190.836 | 191.199 | 191.562 | 191.924 | 192.287 | 192.649 | 193.012 | 193.374 | 193.736 |
| **250** | 194.098 | 194.460 | 194.822 | 195.183 | 195.545 | 195.906 | 196.268 | 196.629 | 196.990 | 197.351 |
| **260** | 197.712 | 198.073 | 198.433 | 198.794 | 199.154 | 199.514 | 199.875 | 200.235 | 200.595 | 200.954 |
| **270** | 201.314 | 201.674 | 202.033 | 202.393 | 202.752 | 203.111 | 203.470 | 203.829 | 204.188 | 204.546 |
| **280** | 204.905 | 205.263 | 205.622 | 205.980 | 206.338 | 206.696 | 207.054 | 207.411 | 207.769 | 208.127 |
| **290** | 208.484 | 208.841 | 209.198 | 209.555 | 209.912 | 210.269 | 210.626 | 210.982 | 211.339 | 211.695 |
| **300** | 212.052 | 212.408 | 212.764 | 213.120 | 213.475 | 213.831 | 214.187 | 214.542 | 214.897 | 215.252 |
| **310** | 215.608 | 215.962 | 216.317 | 216.672 | 217.027 | 217.381 | 217.736 | 218.090 | 218.444 | 218.798 |
| **320** | 219.152 | 219.506 | 219.860 | 220.213 | 220.567 | 220.920 | 221.273 | 221.626 | 221.979 | 222.332 |
| **330** | 222.685 | 223.038 | 223.390 | 223.743 | 224.095 | 224.447 | 224.799 | 225.151 | 225.503 | 225.855 |
| **340** | 226.206 | 226.558 | 226.909 | 227.260 | 227.612 | 227.963 | 228.314 | 228.664 | 229.015 | 229.366 |
| **350** | 229.716 | 230.066 | 230.417 | 230.767 | 231.117 | 231.467 | 231.816 | 232.166 | 232.516 | 232.865 |
| **360** | 233.214 | 233.564 | 233.913 | 234.262 | 234.610 | 234.959 | 235.308 | 235.656 | 236.005 | 236.353 |
| **370** | 236.701 | 237.049 | 237.397 | 237.745 | 238.093 | 238.440 | 238.788 | 239.135 | 239.482 | 239.829 |
| **380** | 240.176 | 240.523 | 240.870 | 241.217 | 241.563 | 241.910 | 242.256 | 242.602 | 242.948 | 243.294 |
| **390** | 243.640 | 243.986 | 244.331 | 244.677 | 245.022 | 245.367 | 245.713 | 246.058 | 246.403 | 246.747 |
| **400** | 247.092 | 247.437 | 247.781 | 248.125 | 248.470 | 248.814 | 249.158 | 249.502 | 249.845 | 250.189 |
| **410** | 250.533 | 250.876 | 251.219 | 251.562 | 251.906 | 252.248 | 252.591 | 252.934 | 253.277 | 253.619 |
| **420** | 253.962 | 254.304 | 254.646 | 254.988 | 255.330 | 255.672 | 256.013 | 256.355 | 256.696 | 257.038 |
| **430** | 257.379 | 257.720 | 258.061 | 258.402 | 258.743 | 259.083 | 259.424 | 259.764 | 260.105 | 260.445 |
| **440** | 260.785 | 261.125 | 261.465 | 261.804 | 262.144 | 262.483 | 262.823 | 263.162 | 263.501 | 263.840 |
| **450** | 264.179 | 264.518 | 264.857 | 265.195 | 265.534 | 265.872 | 266.210 | 266.548 | 266.886 | 267.224 |
| **460** | 267.562 | 267.900 | 268.237 | 268.574 | 268.912 | 269.249 | 269.586 | 269.923 | 270.260 | 270.597 |
| **470** | 270.933 | 271.270 | 271.606 | 271.942 | 272.278 | 272.614 | 272.950 | 273.286 | 273.622 | 273.957 |
| **480** | 274.293 | 274.628 | 274.963 | 275.298 | 275.633 | 275.968 | 276.303 | 276.638 | 276.972 | 277.307 |
| **490** | 277.641 | 277.975 | 278.309 | 278.643 | 278.977 | 279.311 | 279.644 | 279.978 | 280.311 | 280.644 |
| **500** | 280.978 | 281.311 | 281.643 | 281.976 | 282.309 | 282.641 | 282.974 | 283.306 | 283.638 | 283.971 |
| **510** | 284.303 | 284.634 | 284.966 | 285.298 | 285.629 | 285.961 | 286.292 | 286.623 | 286.954 | 287.285 |
| **520** | 287.616 | 287.947 | 288.277 | 288.608 | 288.938 | 289.268 | 289.599 | 289.929 | 290.258 | 290.588 |
| **530** | 290.918 | 291.247 | 291.577 | 291.906 | 292.235 | 292.565 | 292.894 | 293.222 | 293.551 | 293.880 |
| **540** | 294.208 | 294.537 | 294.865 | 295.193 | 295.521 | 295.849 | 296.177 | 296.505 | 296.832 | 297.160 |
| **550** | 297.487 | 297.814 | 298.142 | 298.469 | 298.795 | 299.122 | 299.449 | 299.775 | 300.102 | 300.428 |
| **560** | 300.754 | 301.080 | 301.406 | 301.732 | 302.058 | 302.384 | 302.709 | 303.035 | 303.360 | 303.685 |
| **570** | 304.010 | 304.335 | 304.660 | 304.985 | 305.309 | 305.634 | 305.958 | 306.282 | 306.606 | 306.930 |
| **580** | 307.254 | 307.578 | 307.902 | 308.225 | 308.549 | 308.872 | 309.195 | 309.518 | 309.841 | 310.164 |
| **590** | 310.487 | 310.810 | 311.132 | 311.454 | 311.777 | 312.099 | 312.421 | 312.743 | 313.065 | 313.386 |
| **600** | 313.708 | 314.029 | 314.351 | 314.672 | 314.993 | 315.314 | 315.635 | 315.956 | 316.277 | 316.597 |
| **610** | 316.918 | 317.238 | 317.558 | 317.878 | 318.198 | 318.518 | 318.838 | 319.157 | 319.477 | 319.796 |
| **620** | 320.115 | 320.435 | 320.754 | 321.073 | 321.391 | 321.710 | 322.029 | 322.347 | 322.666 | 322.984 |
| **630** | 323.302 | 323.620 | 323.938 | 324.256 | 324.573 | 324.891 | 325.208 | 325.526 | 325.843 | 326.160 |
| **640** | 326.477 | 326.794 | 327.110 | 327.427 | 327.744 | 328.060 | 328.376 | 328.692 | 329.008 | 329.324 |
| **650** | 329.640 | | | | | | | | | |

## RESISTANCE VS TEMPERATURE TABLE – DIN/IEC 60751, Ro = 100Ω TCR = .00385Ω/Ω/ºC

| Temp (ºC) | 0 | -1 | -2 | -3 | -4 | -5 | -6 | -7 | -8 | -9 |
|---|---|---|---|---|---|---|---|---|---|---|
| **-200** | 18.5201 | | | | | | | | | |
| **-190** | 22.8255 | 22.3965 | 21.9672 | 21.5376 | 21.1076 | 20.6772 | 20.2465 | 19.8154 | 19.3840 | 18.9522 |
| **-180** | 27.0964 | 26.6708 | 26.2449 | 25.8186 | 25.3920 | 24.9651 | 24.5379 | 24.1103 | 23.6824 | 23.2541 |
| **-170** | 31.3350 | 30.9126 | 30.4898 | 30.0667 | 29.6434 | 29.2197 | 28.7956 | 28.3713 | 27.9467 | 27.5217 |
| **-160** | 35.5433 | 35.1238 | 34.7040 | 34.2839 | 33.8635 | 33.4429 | 33.0219 | 32.6006 | 32.1791 | 31.7572 |
| **-150** | 39.7232 | 39.3064 | 38.8894 | 38.4721 | 38.0545 | 37.6367 | 37.2186 | 36.8002 | 36.3815 | 35.9626 |
| **-140** | 43.8764 | 43.4622 | 43.0478 | 42.6331 | 42.2182 | 41.8030 | 41.3876 | 40.9719 | 40.5559 | 40.1397 |
| **-130** | 48.0048 | 47.5930 | 47.1810 | 46.7688 | 46.3563 | 45.9436 | 45.5307 | 45.1175 | 44.7040 | 44.2904 |
| **-120** | 52.1098 | 51.7003 | 51.2906 | 50.8806 | 50.4705 | 50.0601 | 49.6495 | 49.2386 | 48.8276 | 48.4163 |
| **-110** | 56.1930 | 55.7856 | 55.3780 | 54.9702 | 54.5622 | 54.1540 | 53.7456 | 53.3370 | 52.9281 | 52.5191 |
| **-100** | 60.2558 | 59.8504 | 59.4448 | 59.0391 | 58.6331 | 58.2269 | 57.8205 | 57.4139 | 57.0072 | 56.6002 |
| **-90** | 64.2996 | 63.8960 | 63.4923 | 63.0884 | 62.6843 | 62.2800 | 61.8756 | 61.4709 | 61.0661 | 60.6611 |
| **-80** | 68.3254 | 67.9236 | 67.5217 | 67.1195 | 66.7172 | 66.3147 | 65.9120 | 65.5092 | 65.1062 | 64.7030 |
| **-70** | 72.3345 | 71.9344 | 71.5340 | 71.1335 | 70.7328 | 70.3320 | 69.9310 | 69.5299 | 69.1286 | 68.7271 |
| **-60** | 76.3278 | 75.9292 | 75.5304 | 75.1315 | 74.7324 | 74.3331 | 73.9337 | 73.5341 | 73.1344 | 72.7346 |
| **-50** | 80.3063 | 79.9091 | 79.5117 | 79.1143 | 78.7166 | 78.3189 | 77.9210 | 77.5229 | 77.1247 | 76.7263 |
| **-40** | 84.2707 | 83.8748 | 83.4789 | 83.0828 | 82.6865 | 82.2902 | 81.8937 | 81.4970 | 81.1003 | 80.7033 |
| **-30** | 88.2217 | 87.8271 | 87.4325 | 87.0377 | 86.6428 | 86.2478 | 85.8526 | 85.4573 | 85.0619 | 84.6663 |
| **-20** | 92.1599 | 91.7666 | 91.3732 | 90.9797 | 90.5861 | 90.1923 | 89.7985 | 89.4044 | 89.0103 | 88.6160 |
| **-10** | 96.0859 | 95.6938 | 95.3016 | 94.9093 | 94.5169 | 94.1244 | 93.7317 | 93.3390 | 92.9461 | 92.5530 |
| **0** | 100.0000 | 99.6091 | 99.2181 | 98.8270 | 98.4358 | 98.0444 | 97.6529 | 97.2613 | 96.8696 | 96.4778 |

## RESISTANCE – TEMPERATURE EQUATIONS

For industrial measurements, the relationship between resistance and temperature can be approximated by the Callendar–Van Dusen equation:

$Rt = Ro \bullet [1 + At + Bt^2 + C(t-100)t^3]$

$A = \alpha(1+\delta/100)$

$B = -\alpha \times \delta \times 10^{-4}$

$C = -\alpha \times \beta \times 10^{-8}$
(= 0 if t >0)

| Calibration Coefficients (100Ω Pt, DIN/IEC 60751) | |
|---|---|
| A | $3.9083 \times 10^{-3}$ |
| B | $-5.775 \times 10^{-7}$ |
| C | $-4.183 \times 10^{-12}$ |
| $\alpha$ | 0.003850 |
| $\delta$ | 1.49990 |
| $\beta$ | 0.10863 |

$R_0$ = resistance at t = 0ºC
$R_{100}$ = resistance at t = 100ºC
$R_h$ = resistance at t = $t_h$ (a high temperature – eg: freezing point of tin or zinc)
$R_l$ = resistance at t = $t_l$ (a low temperature – eg: boiling point of oxygen)

(alpha) $\alpha = (R_{100}-R_0) \div 100 \times R_0$ (Temperature coefficient of resistance)

(delta) $\delta = [t_h - (R_h-R_0) \div (R_0 \times \alpha)] \div [(t_h \div 100-1) \times (t_h \div 100)]$ (Callendar constant)

(beta) $\beta = [t_l - \{(R_l-R_0) \div \alpha \times R_0 + \delta \times (t_l \div 100-1) \times (t_l \div 100)\}] \div [(t_l \div 100-1) \times (t_l \div 100)^3]$ (Van Dusen constant)
= 0 (if t>0)

## CONNECTION DIAGRAMS

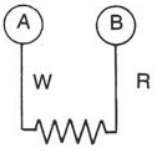


2 Wire

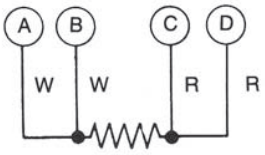


4-Wire, type A

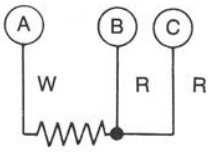


3 Wire

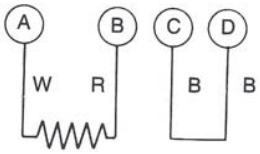


4-Wire, type B

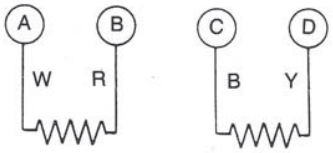


Duplex 2-Wire

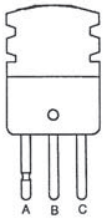


1061-CU
3-Pole Plug - Simplex

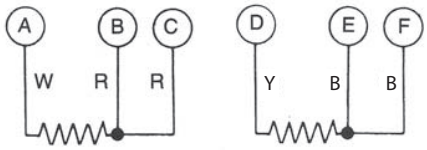


Duplex 3-Wire

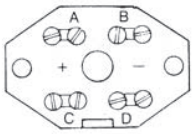


14-0014 Terminal Block
(for HD head – Simplex)

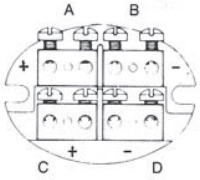


14-0342 Terminal Block
(for GP head – Simplex
Non Spring Loaded)

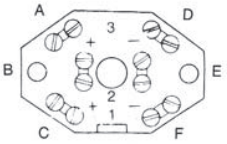


14-0036 Terminal Block
(for GP head – Duplex)

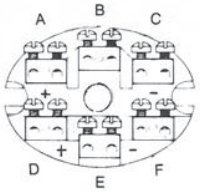


14-0343-6 Terminal Block
(for GP head – Duplex or
Simplex Spring Loaded)

THERMO KINETICS MEASUREMENT & CONTROL
1-800-268-0967
www.thermo-kinetics.com

Mississauga
(905) 670-2266
Fax (905) 670-8530

Montréal
(514) 856-0370
Fax (514) 856-0373

Québec
(418) 655-6505
Fax (514) 856-0373

Calgary
(403) 252-2522
Fax (403) 252-2778

Edmonton
(780) 448-1580
Fax (780) 463-5164

Vancouver
(604) 231-0711
Fax (604) 270-3644

® Registered Trademark of Thermo-Kinetics Company Limited.
Specifications subject to change without notice.

# IPAQ-L

6x
To be mounted in
PCL-900 and PCL-901

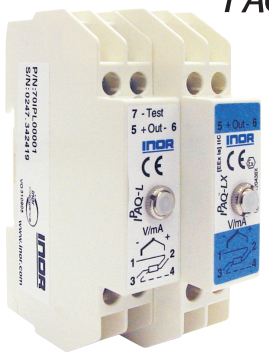


## Universal Programmable 2-wire Transmitters

IPAQ-L/-LX are universal, isolated 2-wire transmitters for temperature and other measurement applications. They combine competitive pricing, functionality and simple configuration.
Useful error correction functions improve the accuracy.

- Fully universal, linearized and isolated
- Accepts RTD, T/C, mV and Ω
- Sensor error and system (sensor/transmitter) error correction for highest total accuracy
- Full access to all features while in operation
- NAMUR compliant
- Consistent sensor break function
- Simplified loop check-up with calibration output
- Test output without breaking the loop (IPAQ-L)
- IPRO, easy-to-use Windows configuration software

Configured for -50 - 50C

## Specifications:

| | | |
|---|---|---|
| **Input RTD** | | 3-, 4-wire connection |
| Pt100 (α=0.00385) | | -200 to +1000 °C / -328 to +1832 °F |
| Pt1000 (α=0.00385) | | -200 to +200 °C / -328 to +392 °F |
| PtX 10 ≤ X ≤ 1000 (α=0.00385) | | Upper range depending on X-value |
| Pt100 (α=0.003902) | | -200 to +1000 °C / -328 to +1832 °F |
| Pt100 (α=0.003916) | | -200 to +1000 °C / -328 to +1832 °F |
| Ni100[1], Ni120[2] | | -60 to +250 °C / -76 to +482 °F |
| Ni1000[1] | | -100 to +150 °C / -148 to +302 °F |
| Cu10[3] | | -200 to +260 °C / -328 to +500 °F |
| **Input Potentiometer/resistance** | | 3-, 4-wire connection. 0 to 2000 Ω |
| **Input Thermocouples** | | Types B, C, E, J, K, L, N, R, S, T, U |
| **Input mV** | | -10 to +500 mV |
| **Sensor failure** | | User definable output |
| **Adjustments-Zero** | | Any value within range limits |
| **Adjustments-Minimum spans** | | |
| Pt100, Pt1000, Ni100, Ni1000 | | 10 °C / 18 °F |
| Potentiometer | | 10 Ω |
| T/C, mV | | 2 mV |
| **Output** | | 4-20 / 20-4 mA, temperature linear |
| **Operating temperature** | | -20 to +70 °C / -4 to +158 °F |
| **Galvanic isolation** | | 1500 VAC, 1 min |
| **Power supply** | IPAQ-L | 7.5 to 36 VDC |
| | IPAQ-LX | 8 to 30 VDC |
| **Intrinsic safety** (Mounting in safe area) | | |
| IPAQ-LX ATEX: | | II (1) G [EEx ia] IIC |
| IPAQ-LX FM: | | IS Class I-III, DIV 1, GP A-G |
| IPAQ-LX CSA: | | Class I, Groups A-D; Class II, Groups E-G; Class III |
| **Typical accuracy** | | ±0.1 % of span |
| **Mounting** | | Rail acc. to DIN EN50022, 35 mm |

[1] DIN 43760 [2] Edison No. 7 [3] Edison No. 15

### Input connections

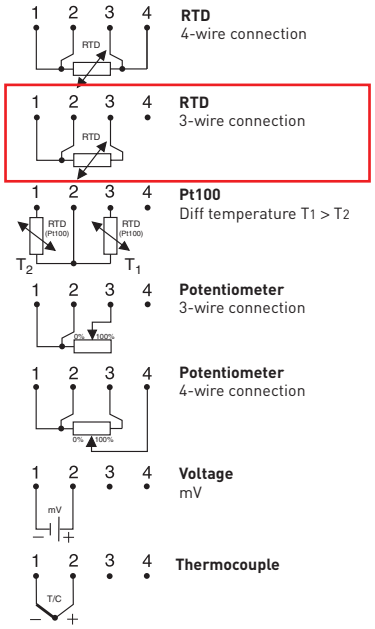


### Output connections

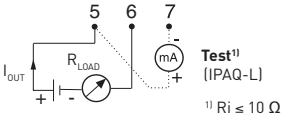


[1] Ri ≤ 10 Ω

### Output load diagram

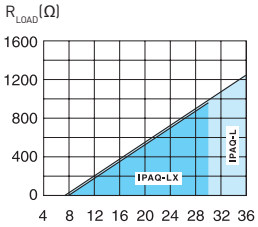


$R_{LOAD}$=(U-7.5)/0.022 (IPAQ-L)
$R_{LOAD}$=(U-8)/0.022 (IPAQ-LX)

### Dimensions

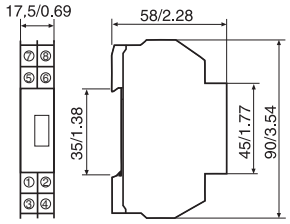


mm/inches

### Ordering information

| | |
|---|---|
| IPAQ-L | 70IPL00001 |
| IPAQ-LX (ATEX) | 70IPLX0001 |
| IPAQ-LX (FM, CSA) | 70IPLX1001 |
| PC Configuration Kit | 70CFG00092 |
| Configuration | 70CAL00001 |

REVIEWED BY CONTRACTOR

Kudlik Construction Ltd.

NAME: Sandra Rousseau P.Eng

DATE: Jul 20, 2018

NORCLAIR
MÉCANIQUE DE PROCÉDÉ

# SHOP DRAWINGS

**DA-IC-09** (Fixed gas detectors)

**Date :** 2018-07-20

| **Information general** | |
|---|---|
| Project : **WWTP UPGRADE - IQALUIT** | |
| Client : Kudlik Construction Ltd.<br>To : Sandra Rousseau P.Eng., Project Manager | Project number : **2018-062**<br>E-mail : srousseau@kudlik.biz |
| Contractor : **Norclair inc.** | Project number Norclair : **P1039** |
| Address : 1100, Mountain Masson, Laval, QC, Canada H7E 4P2 | |
| Project Manager : Dominic Papineau, Project Manager | E-mail: dpapineau@norclair.ca |
| Phone : 450-688-4012 # 720 | Cell. : 514-409-1832 |

| **Information, subcontractor or supplier** | |
|---|---|
| Sub/supplier : Contro-Valve | |
| Contact : Marc-André Ouellette | Phone : (514) 217-5072 |

| **Information on the equipment** | |
|---|---|
| Speciality : **Instrumentation and Control** | |
| Equipment : Fixed gas detectors | |
| Drawing reference : | |
| Specification reference : : **47 30 03** | Division : |
| Article : | Number of pages : 15 |

**CONSULTANT APPROVAL**

Comments within.

STANTEC PROJECT #: 110126045

SUBMITTAL # DA-IC-09

This review by Stantec is for general conformance with the design concept of Stantec's design of the:

☐ Architectural ☐ Structural ☐ Mechanical ☐ Electrical ☑ Other Instrumentation

component(s) only and does not mean that Stantec has verified or approves the shop drawing(s). The Contractor remains solely responsible for the shop drawing(s) and this review by Stantec does not relieve the Contractor of the Contractor's responsibility for errors or omissions in the shop drawing(s) or for meeting all requirements of the contract documents. This review does not mean that Stantec approves the detailed design inherent in the shop drawing, responsibility for which shall remain with the Contractor submitting same, nor does this review mean that Stantec accepts any deviation of the shop drawing(s) from the contract documents. The Contractor is responsible for confirming all dimensions and correlating them at the job site, for all construction means, methods and techniques, and for coordination of construction work of all trades, including coordination of all shop drawings.

Stantec

☐ REVIEWED

☑ REVIEWED, AS NOTED

☐ REVISE AND RESUBMIT

☐ NOT REVIEWED

DATE 2018-JUL-24

BY David Hutchison, P.Eng.

1100, montée Masson
Laval, QC, Canada
H7E 4P2

Phone. : 450-688-4012
Fax : 450-661-6341
E-Mail : info@norclair.ca
www.norclair.ca

# ULTIMA® X5000 **Gas Monitor**

The future looks bright.

MSA
*The Safety Company*

**Simple retrofits have identical footprint and wiring to ULTIMA X Gas Monitor series.**

**Bluetooth® wireless technology allows mobile device to act as HMI screen and controller.**

GET IT ON Google Play

**Download the X/S Connect App from the Google Play store.**

***Reduce setup time by at least 50% with the X/S Connect App***

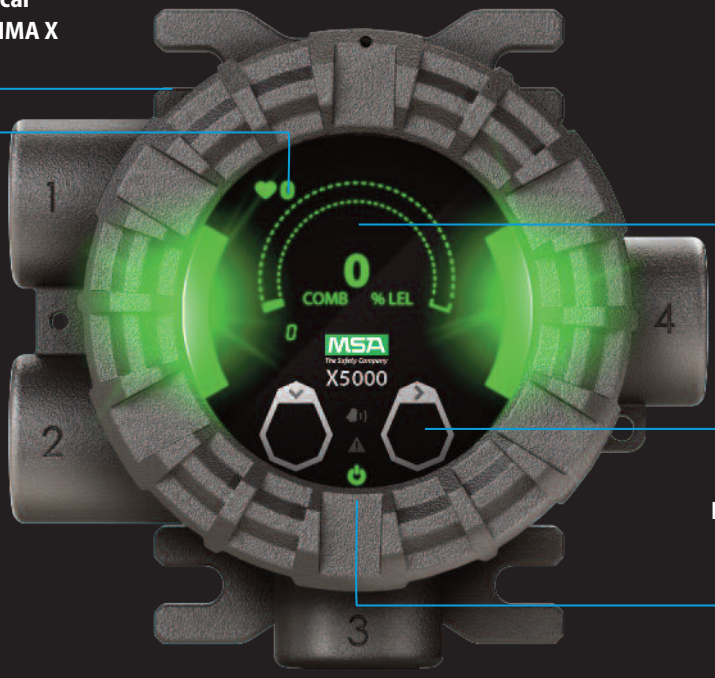


**Intuitive display features new design equipped with organic LED (OLED) display, with full word text in 9 languages. Bright green, yellow and red status LEDs for extreme visibility.**

**Industry-first, touch-button interface provides intuitive, tool-free user experience.**

**Instrument status indicators illuminate power, fault and alarm conditions.**

## Advanced Sensor Technology

POWERED BY XCell® SENSORS

WITH TruCal®

- Patented XCell Sensors with TruCal technology extend calibration cycles for as long as 18 months, actively monitor sensor integrity and compensate for environmental factors and electrochemical sensor drift.*
- Worry-free operation; automatically self-checks four times per day.
- Three-year warranty and five-year expected life for XCell Sensors.
- **SafeSwap** enables safe and quick XCell Sensor replacement without powering off gas detector.
- **Dual sensor capability** doubles sensing power with half the footprint of a single gas sensor transmitter.

SafeSwap®

Ranges to be:
0 - 100 ppm H2S
0 - 100% LEL




*Only CO & $H_2S$ XCell Sensors

## Applications

- Chemical
- Oil and gas
- Petrochemical
- Utilities
- Wastewater
- General industry

Ultima5000 (XP cl 1 div 2), H2S & LEL
AIT-01-901 w/ AE-01-901A & AE-01-902B
AIT-01-902 w/ AE-01-902A & AE-01-902B
AIT-01-903 w/ AE-01-903A & AE-01-903B
AIT-01-904 w/ AE-01-904A & AE-01-904B

# ULTIMA® X5000 **Gas Monitor**

MSA
*The Safety Company*

| PRODUCT SPECIFICATIONS | | | |
|---|---|---|---|
| **COMBUSTIBLE GAS SENSOR TYPE** | Catalytic Bead (XCell Comb)<br>Infrared (XIR PLUS) | | |
| **TOXIC GAS & OXYGEN SENSOR TYPE** | Carbon Dioxide $CO_2$ (XIR PLUS)<br>Carbon Monoxide CO (XCell Toxic)<br>Carbon Monoxide CO $H_2$-Resistant (XCell Toxic)<br>Hydrogen Sulfide $H_2S$ (XCell Toxic)<br>Oxygen $O_2$ (XCell $O_2$) | | |
| **SENSOR MEASURING RANGES** | Combustible: 0-100% LEL<br>$H_2S$: 0-10, 0-50, 0-100 ppm<br>$CO_2$: 0-2%, 0-5% Vol<br>CO: 0-100, 0-500, 0-1000 ppm<br>CO-$H_2$ Resist: 0-100 ppm<br>$O_2$: 0-25% | | |
| **TYPICAL SENSOR LIFE** | 5 years – XCell Sensors<br>10 years - infrared | | |
| **SENSOR PERFORMANCE*** | **T90 (TYPICAL)** | **REPEATABILITY** | **ZERO DRIFT (PER YEAR)** |
| **XIR PLUS** | <2 sec. | +/- 1% LEL or Vol | <2% full scale |
| **XCELL COMB** | <30 sec. | +/- 1% LEL | <5% LEL |
| **XCELL $H_2S$** | <23 sec. | +/- 3% | <1% full scale |
| **XCELL $O_2$** | <11 sec. | +/- 0.1% Vol | 0.2% Vol |
| **XCELL CO** | <11 sec. | +/- 3% | <1% full scale |
| **APPROVALS CLASSIFICATION** | **US Divisions**<br>Class I Div 1 Groups A-D, T5, Type 4X, IP66<br>Class II Div 1 Groups E-G, T6; Class III<br>**US Zones**<br>Class I Zone 1 AEx db IIC T5 Gb<br>Class II Zone 21 AEx tb IIIC T85°C Db<br>**Global Zones**<br>Ex db IIC T5 Gb<br>Ex tb IIIC T85°C Db | | |
| **WARRANTY** | X5000 Transmitter: 2 years<br>XIR PLUS: 10 years source, 5 years electronics<br>XCell Sensors: 3 years | | |
| **APPROVALS** | CSA, ATEX, IECEx, CE Marking.<br>Complies with C22.2 No. 152, FM 6320<br>RED, FCC<br>Suitable for SIL 2 | | |
| **ENVIRONMENTAL SPECIFICATIONS** | | | |
| **OPERATING TEMPERATURE RANGE** | XCell: -40°C to +60°C<br>XIR PLUS: -40°C to +60°C<br>*(may differ by gas, see manual)* | | |
| **STORAGE TEMPERATURE RANGE** | -40°C to +60°C | | |
| **RELATIVE HUMIDITY (NON-CONDENSING)** | 10-95% (XCell Toxics & $O_2$)<br>0-95% (XCell Comb)<br>0-95% (XIR PLUS) | | |

** Typical response at standard temperature and pressure test conditions*

| MECHANICAL SPECIFICATIONS | | |
|---|---|---|
| **INPUT POWER** | 10 to 30 VDC, 3 wire, <5W nominal | |
| **SIGNAL OUTPUT** | Dual 4-20 mA current source, HART | |
| **BLUETOOTH (OPTIONAL)** | Bluetooth Low Energy (BLE) v4.3 or higher | |
| **RELAY RATINGS** | 5A @ 30VDC; 5A @220 VAC<br>(3X) SPDT – fault, warn, alarm | |
| **RELAY MODES** | Common, discrete, horn | |
| **NOMINAL MAX POWER (W/ RELAYS)** | XIR PLUS<br>XCell Comb<br>XCell Toxic & $O_2$<br>XIR PLUS and XCell Comb<br>XIR PLUS and XCell Toxic & $O_2$<br>Dual XIR PLUS<br>Dual XCell Toxic & $O_2$<br>Dual XCell Comb<br>Dual XCell Comb and XCell Toxic & $O_2$ | 6.7W<br>5.5W<br>2.8W<br>9.6W<br>7.0W<br>11.6W<br>3.6W<br>10.6W<br>5.5W |
| **EMC DIRECTIVE** | Complies with EN 50270, EN 61000-6-4, EN 61000-6-3 | |
| **DISPLAY** | Organic LED (multi-lingual) with Contrast Ratio of 2000:1 and View Angle of 160° | |
| **HART** | HART 7, HART device description language available | |
| **FAULTS MONITORED** | Low supply voltage, RAM checksum error, flash checksum error, EEPROM error, internal circuit error, relay, invalid sensor configuration, sensor faults, calibration faults, general system | |
| **WIRING REQUIREMENTS** | 3-wire (single sensor) or 4-wire (dual sensor) shielded cable.<br>*Refer to manual for mounting distances and wire gauge.* | |

## DIMENSIONS

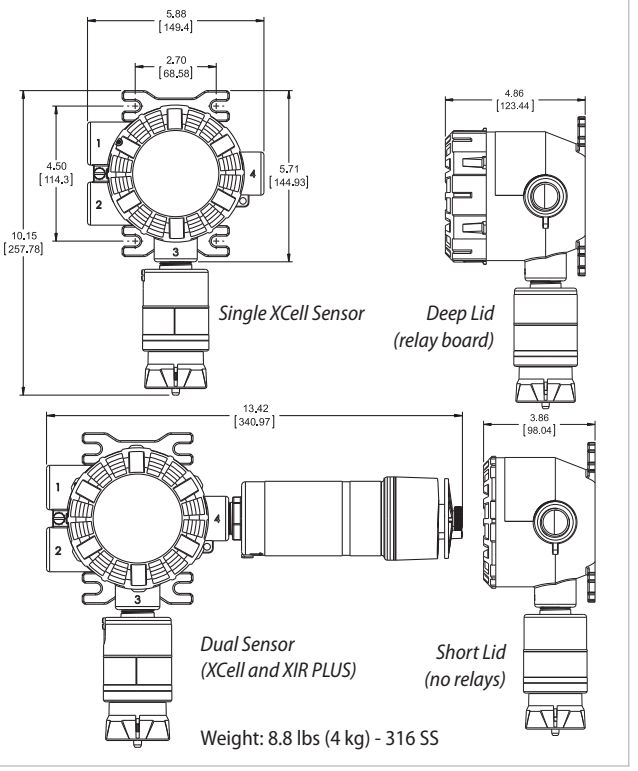


Note: This Bulletin contains only a general description of the products shown. While uses and performance capabilities are described, under no circumstances shall the products be used by untrained or unqualified individuals and not until the product instructions including any warnings or cautions provided have been thoroughly read and understood. Only they contain the complete and detailed information concerning proper use and care of these products. Specifications subject to change without notice.


*Corporate Headquarters:*
**MSA – The Safety Company**
1000 Cranberry Woods Drive
Cranberry Township, PA 16066
United States
+1-724-776-8600
**info.us@MSAsafety.com**

Additional locations can be found on our web site:
**www.MSAsafety.com**



**ID 0720-185-MC / Feb 2018**


© MSA 2017 Printed in U.S.A.

**A - X5000 -** ⬭ - ⬭ - ⬭ - ⬭ - ⬭ - ⬭ - ⬭ - ⬭

**Material**
0 = Stainless Steel - 3/4" NPT
2 = Stainless Steel - M25

**Approvals**
F = FM/CSA
A = ATEX/IEC

**Bluetooth**
0 = Yes
1 = No

**Outputs**
0 = Analog/HART
1 = Analog/HART/Relays

**Place Holder**
0 = Future Use

**Sensor #1**
Check Sensor Label
See Read First

**Sensor #2**
Check Sensor Label
See Read First

**Tag**
0 = None
1 = Stainless Steel affixed tag

## Read First

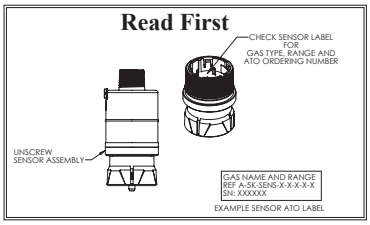


EXAMPLE SENSOR ATO LABEL

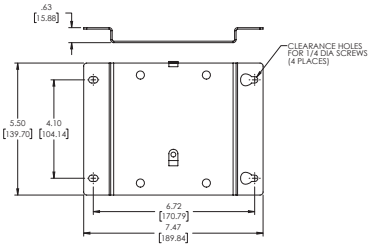


**MOUNTING BRACKET**
(REQUIRED FOR XIR PLUS SENSORS)
(PART NUMBER 10179361)

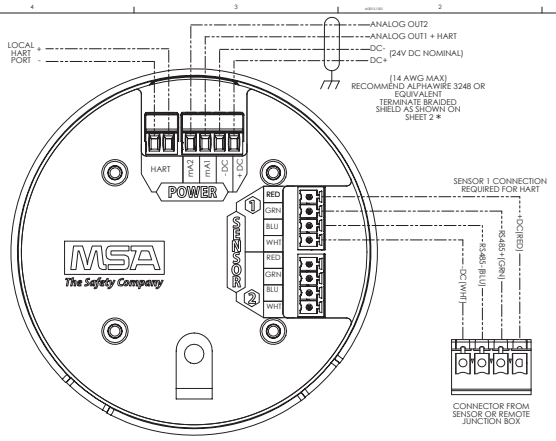


**MAIN BOARD WITHOUT RELAYS**

| | |
|---|---|
| CUSTOMER | |
| P.O. NO. | |
| MSA NO. | |
| LOCATION | |
| TAG NO. | |
| TOTAL NO. OF UNITS | |

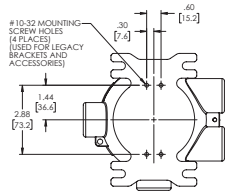


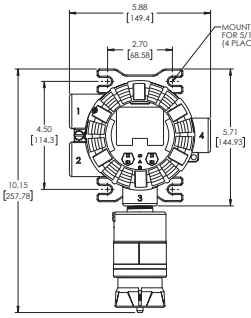


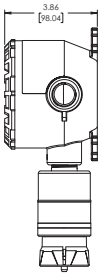


**SHORT LID**
(USED FOR MAIN BOARD WITHOUT RELAYS OR JUNCTION BOX BOARD)

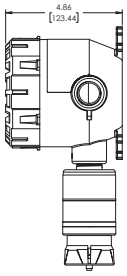


**DEEP LID**
(USED FOR MAIN BOARD WITH RELAYS)

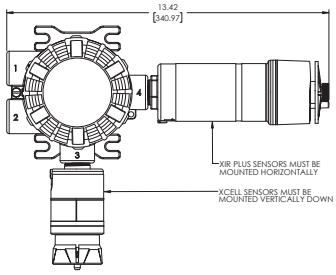


NOTES:
1. DIMENSIONS SHOWN ARE IN INCHES [MILLIMETERS]
2. MAIN HOUSING AND REMOTE JUNCTION BOX HAVE THE SAME DIMENSIONS.

**REVISIONS**

| | | |
|---|---|---|
| D | 9-4-2017<br>ADDED SHT FOR REVISED WIRE LENGTH TABLES & PICTORIALS<br>C:#8000000021543 | |
| LRB | | JD |

DIRECTED DATA: **Production** REVISION: **1**


www.MSAsafety.com
THIS DRAWING IS THE PROPERTY OF MSA - THE SAFETY COMPANY AND IS MADE AVAILABLE TO YOU IN CONFIDENCE AND SUBJECT TO THE FOLLOWING: NO PERMISSION IS GRANTED TO PUBLISH, USE, REPRODUCE, TRANSMIT OR DISCLOSE THIS DRAWING OR ANY PART OF IT IN ANY FORM OR BY ANY MEANS, OTHER THAN WITH THE PRIOR WRITTEN CONSENT OF MSA - THE SAFETY COMPANY. THIS DRAWING IS NOT TO BE USED FOR THE MANUFACTURE OF ARTICLES FOR MSA - THE SAFETY COMPANY.


MSA STANDARD SHOP PRACTICES APPLY

THIRD ANGLE PROJECTION

DO NOT SCALE DWG.

| | | | |
|---|---|---|---|
| DRAWN BY | DATE | JOB NO. 3001299& PH0705 | APPROVAL AGENCY CODE: NIOSH ATR. DOC.: |
| W.JE | 9-29-2016 | | |
| CHECKED BY | | | |
| C.STARTA | 3-28-2017 | | |
| PROJECT ENGR. | | | |
| N.CICCONE | 3-28-2017 | | |
| QUALITY ASSURANCE | | | |
| J.DANNHARDT | 3-28-2017 | | |
| MANUFACTURING | | | |
| M.JRINSAK | 3-28-2017 | | |

# INSTALLATION OUTLINE, ULTIMA X5000

CADD REF: SK3015-1051 SCALE: 1:2

SHEET SIZE **D** **SK3015-1051** SHEET 1 OF 4

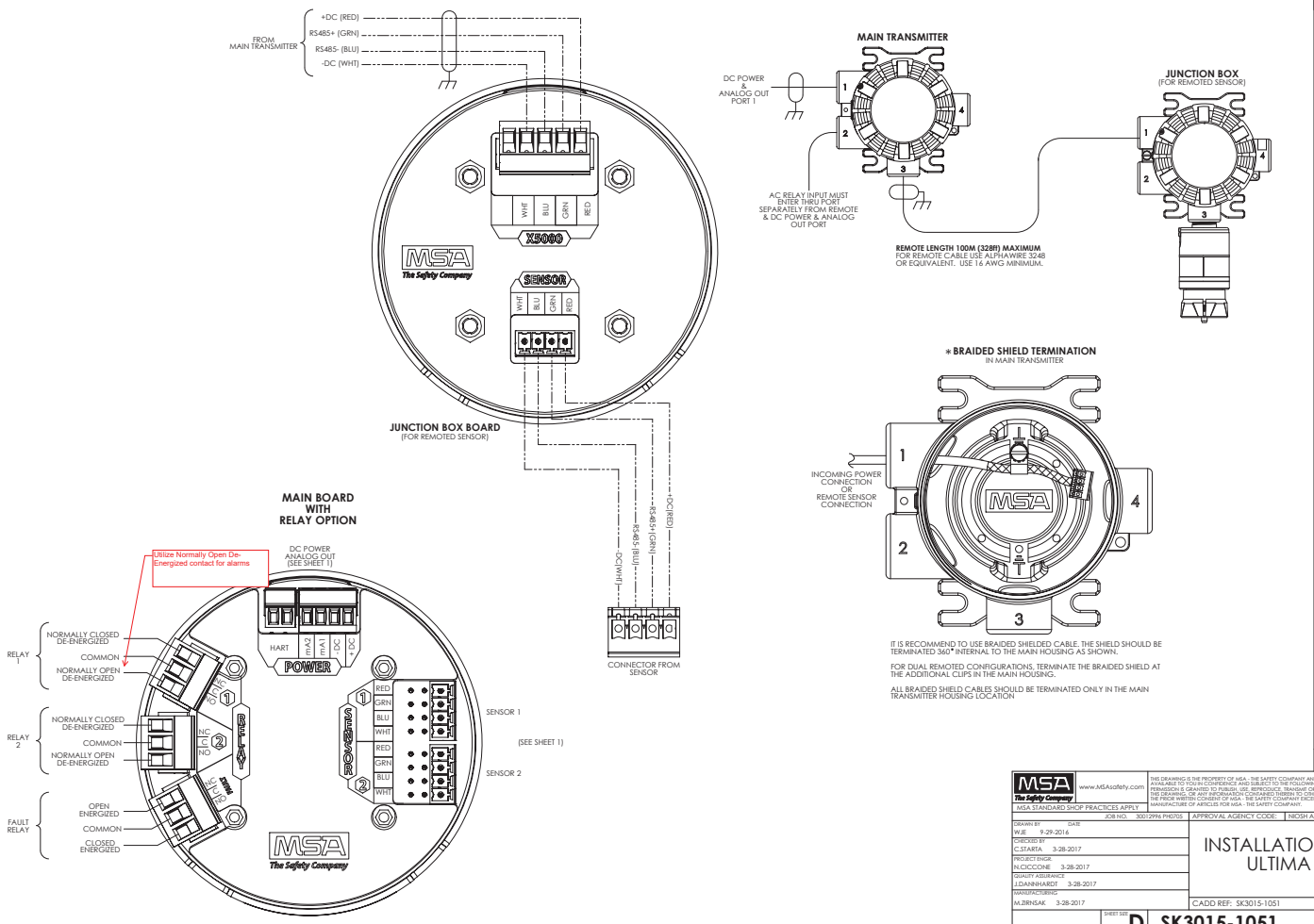


IT IS RECOMMEND TO USE BRAIDED SHIELDED CABLE. THE SHIELD SHOULD BE TERMINATED 360° INTERNAL TO THE MAIN HOUSING AS SHOWN.

FOR DUAL REMOTED CONFIGURATIONS, TERMINATE THE BRAIDED SHIELD AT THE ADDITIONAL CLIPS IN THE MAIN HOUSING.

ALL BRAIDED SHIELD CABLES SHOULD BE TERMINATED ONLY IN THE MAIN TRANSMITTER HOUSING LOCATION

REVISIONS
REV. 1

| | |
|---|---|
| DRAWING STATE | Production |
| REVISION | 1 |

MSA The Safety Company — www.MSAsafety.com

MSA STANDARD SHOP PRACTICES APPLY

THIS DRAWING IS THE PROPERTY OF MSA - THE SAFETY COMPANY AND IS MADE AVAILABLE TO YOU IN CONFIDENCE AND SUBJECT TO THE FOLLOWING NO PERMISSION IS GRANTED TO PUBLISH, USE, REPRODUCE, TRANSMIT OR DISCLOSE THIS DRAWING OR ANY INFORMATION CONTAINED THEREIN TO OTHERS WITHOUT THE PRIOR WRITTEN CONSENT OF MSA - THE SAFETY COMPANY EXCEPT FOR THE MANUFACTURE OF ARTICLES FOR MSA - THE SAFETY COMPANY.

THIRD-ANGLE PROJECTION

DO NOT SCALE DWG.

JOB NO. 30012996 PH0705 | APPROVAL AGENCY CODE: | NIOSH ATTR. DOC.:

| | |
|---|---|
| DRAWN BY | WJE 9-29-2016 |
| CHECKED BY | C.STARTA 3-28-2017 |
| PROJECT ENGR. | N.CICCONE 3-28-2017 |
| QUALITY ASSURANCE | J.DANNHARDT 3-28-2017 |
| MANUFACTURING | M.ZIRNSAK 3-28-2017 |

# INSTALLATION OUTLINE, ULTIMA X5000

CADD REF: SK3015-1051 | SCALE: 1:2

SHEET SIZE D | SK3015-1051 | SHEET 2 OF 4

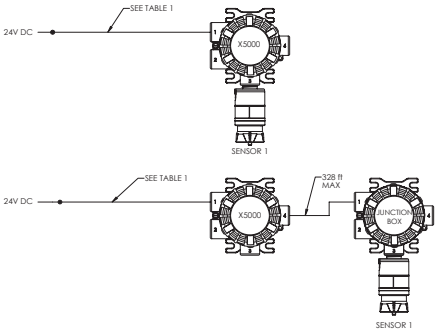


**TABLE 1**

**MAXIMUM WIRE LENGTH TO MAIN TRANSMITTER WITH SINGLE SENSOR**

| Sensor Mounting | Sensor 1 | Max Power (W) | Max Distance (FT) To Transmitter | | | |
|---|---|---|---|---|---|---|
| | | | 24 VDC Supply | | | |
| | | | 18 AWG | 16 AWG | 14 AWG | 12 AWG |
| MOUNTED ON TRANSMITTER | Echem | 2.8 | 2211 | 3337 | 5314 | 8440 |
| | Catalytic | 5.5 | 1548 | 2335 | 3719 | 5907 |
| | XIR Plus | 6.7 | 1184 | 1787 | 2846 | 4520 |
| REMOTE MOUNTED ON JUNCTION BOX (UP TO 328 ft) | Echem | 2.8 | 2210 | 3335 | 5313 | 8439 |
| | Catalytic | 5.5 | 1504 | 2294 | 3679 | 5867 |
| | XIR Plus | 6.7 | 1090 | 1697 | 2759 | 4435 |

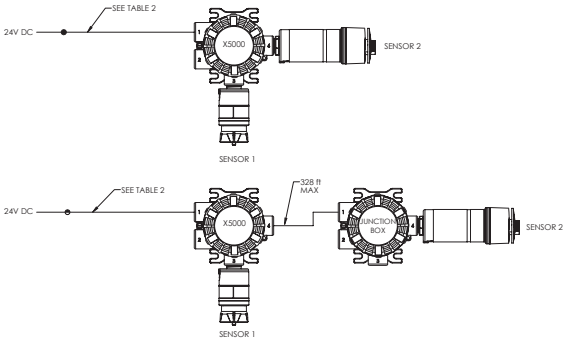


**TABLE 2**

**MAXIMUM WIRE LENGTH TO MAIN TRANSMITTER WITH 2 SENSORS**

| Sensor Mounting | Sensor 1 | Sensor 2 | Max Power (W) | Max Distance (FT) To Transmitter | | | |
|---|---|---|---|---|---|---|---|
| | | | | 24 VDC Supply | | | |
| | | | | 18 AWG | 16 AWG | 14 AWG | 12 AWG |
| TWO SENSORS Mounted on Transmitter | Echem | Echem | 3.6 | 2078 | 3136 | 4994 | 7932 |
| | | Catalytic | 5.3 | 1473 | 2223 | 3541 | 5623 |
| | | XIR Plus | 7.0 | 1076 | 1623 | 2585 | 4106 |
| | Catalytic | Echem | 5.3 | 1473 | 2223 | 3541 | 5623 |
| | | Catalytic | 10.6 | 1151 | 1736 | 2765 | 4392 |
| | | XIR Plus | 10.9 | 893 | 1347 | 2146 | 3408 |
| | XIR Plus | Echem | 7.0 | 1076 | 1623 | 2585 | 4106 |
| | | Catalytic | 10.9 | 893 | 1347 | 2146 | 3408 |
| | | XIR Plus | 11.6 | * Limit sensor must be remote mounted if using two XIR Plus sensors | | | |
| ONE SENSOR mounted on junction box (328 ft Max), ONE SENSOR on transmitter | Echem | Echem | 3.6 | 2096 | 3154 | 5012 | 7952 |
| | | Catalytic | 5.3 | 1441 | 2193 | 3512 | 5596 |
| | | XIR Plus | 7.0 | 982 | 1536 | 2501 | 4024 |
| | Catalytic | Echem | 5.3 | 1441 | 2193 | 3512 | 5596 |
| | | Catalytic | 10.6 | 1124 | 1711 | 2741 | 4368 |
| | | XIR Plus | 10.9 | 763 | 1225 | 2029 | 3295 |
| | XIR Plus | Echem | 7.0 | 982 | 1536 | 2501 | 4024 |
| | | Catalytic | 10.9 | 763 | 1225 | 2029 | 3295 |
| | | XIR Plus | 11.6 | 731 | 1135 | 1843 | 2961 |

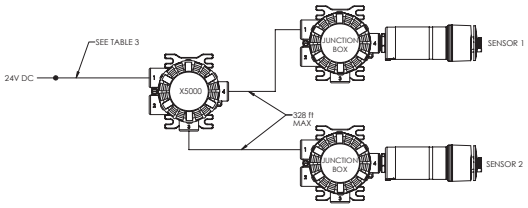


**TABLE 3**

**MAXIMUM WIRE LENGTH TO MAIN TRANSMITTER WITH 2 REMOTED SENSORS**

| Sensor Mounting | Sensor 1 | Sensor 2 | Max Power (W) | Max Distance (FT) To Transmitter | | | |
|---|---|---|---|---|---|---|---|
| | | | | 24 VDC Supply | | | |
| | | | | 18 AWG | 16 AWG | 14 AWG | 12 AWG |
| TWO SENSORS mounted on junction box up to 328ft for 24V | Echem | Echem | 2.8 | 2079 | 3134 | 4992 | 7932 |
| | | Catalytic | 5.3 | 1421 | 2173 | 3492 | 5576 |
| | | XIR Plus | 7.0 | 962 | 1516 | 2481 | 4004 |
| | Catalytic | Echem | 5.3 | 1421 | 2173 | 3492 | 5576 |
| | | Catalytic | 10.6 | 1104 | 1691 | 2721 | 4348 |
| | | XIR Plus | 10.9 | 743 | 1205 | 2009 | 3275 |
| | XIR Plus | Echem | 7.0 | 962 | 1516 | 2481 | 4004 |
| | | Catalytic | 10.9 | 743 | 1205 | 2009 | 3275 |
| | | XIR Plus | 11.6 | 711 | 1115 | 1823 | 2941 |

**NOTES:**

1. WHEN SIZING A SYSTEM'S 24V SUPPLY, A 1 AMP INRUSH CURRENT WITH A 1ms DURATION SHOULD BE CONSIDERED FOR EACH ULTIMA X5000 ON THE POWER SUPPLY

REVISIONS

REV. 1

DOCUMENT STATUS: Production — REVISION: 1

MSA The Safety Company — www.MSAsafety.com

MSA STANDARD SHOP PRACTICES APPLY

THIS DRAWING IS THE PROPERTY OF MSA - THE SAFETY COMPANY AND IS MADE AVAILABLE TO YOU IN CONFIDENCE AND SUBJECT TO THE FOLLOWING: NO PERMISSION IS GRANTED TO PUBLISH, USE, REPRODUCE, TRANSMIT OR DISCLOSE THIS DRAWING OR THE INFORMATION CONTAINED THEREIN TO OTHERS WITHOUT THE PRIOR WRITTEN CONSENT OF MSA - THE SAFETY COMPANY EXCEPT FOR THE MANUFACTURE OF ARTICLES FOR MSA - THE SAFETY COMPANY.

THIRD ANGLE PROJECTION — DO NOT SCALE DWG.

JOB NO. 50012996 PHD705 | APPROVAL AGENCY CODE: | NIOSH ATR. DOC.:

| | |
|---|---|
| DRAWN BY W.JE 9-29-2016 | INSTALLATION OUTLINE, ULTIMA X5000 |
| CHECKED BY C.STARTA 3-28-2017 | |
| PROJECT ENGR. N.CICCONE 3-28-2017 | |
| QUALITY ASSURANCE J.DANNHARDT 3-28-2017 | |
| MANUFACTURING M.ZIRHSAK 3-28-2017 | CADD REF: N/A — SCALE: 1:1 |

SHEET SIZE: D — SK3015-1051 — SHEET 3 OF 4

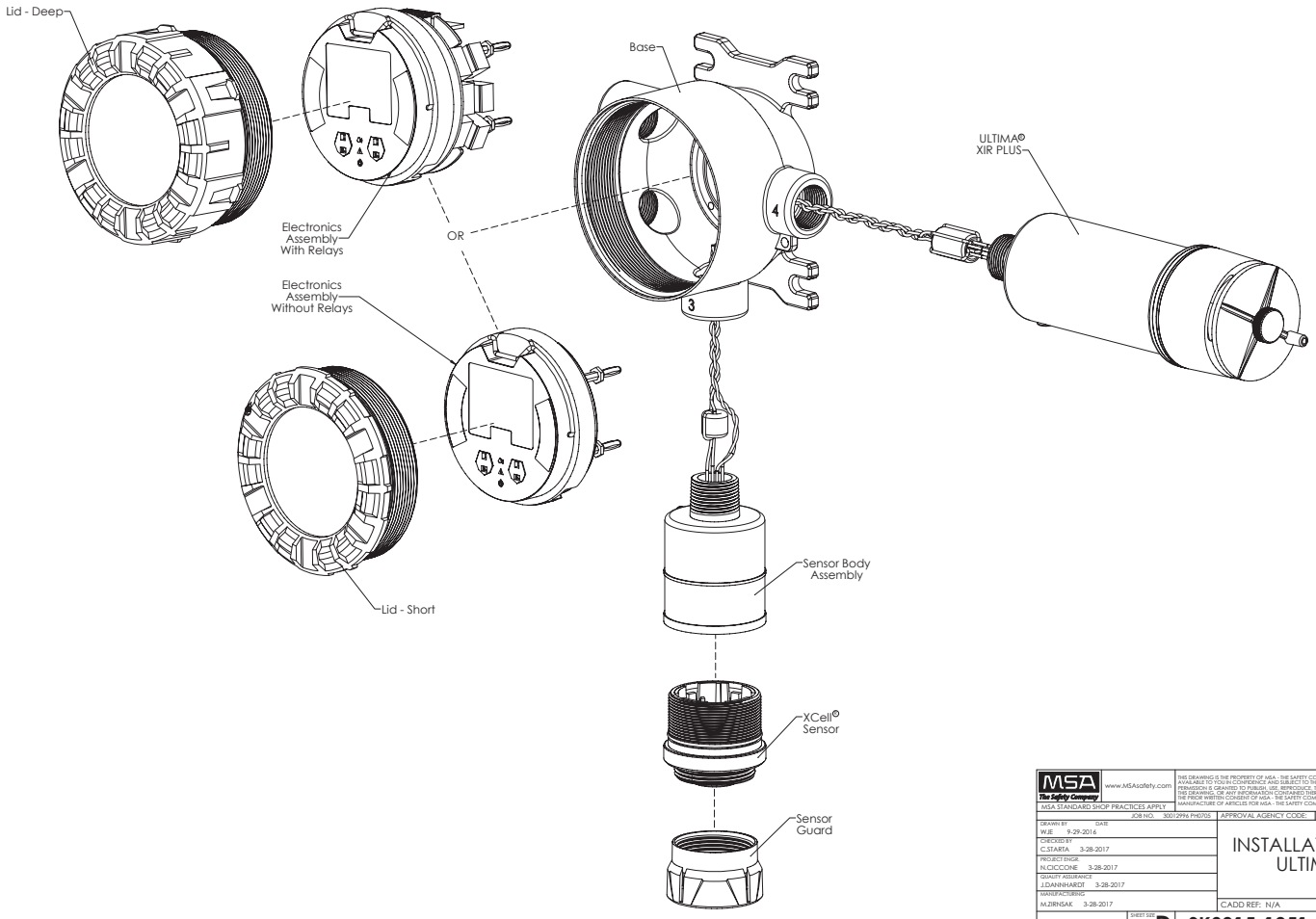


REVISIONS
REV. 1

| | | |
|---|---|---|
| MSA The Safety Company | www.MSAsafety.com | THIS DRAWING IS THE PROPERTY OF MSA - THE SAFETY COMPANY AND IS MADE AVAILABLE TO YOU IN CONFIDENCE AND SUBJECT TO THE FOLLOWING NO PERMISSION IS GRANTED TO PUBLISH, USE, REPRODUCE, TRANSMIT OR DISCLOSE THIS DRAWING, OR ANY INFORMATION CONTAINED THEREIN TO OTHERS WITHOUT THE PRIOR WRITTEN CONSENT OF MSA - THE SAFETY COMPANY EXCEPT FOR THE MANUFACTURE OF ARTICLES FOR MSA - THE SAFETY COMPANY. |
| MSA STANDARD SHOP PRACTICES APPLY | | |

THIRD-ANGLE PROJECTION

DO NOT SCALE DWG.

| | |
|---|---|
| JOB NO. 30012996 PH0705 | APPROVAL AGENCY CODE: NIOSH ATTR. DOC.: |
| DRAWN BY: WJE DATE: 9-29-2016 | INSTALLATION OUTLINE, ULTIMA X5000 |
| CHECKED BY: C.STARTA 3-28-2017 | |
| PROJECT ENGR.: N.CICCONE 3-28-2017 | |
| QUALITY ASSURANCE: J.DANNHARDT 3-28-2017 | |
| MANUFACTURING: M.ZIRNSAK 3-28-2017 | CADD REF: N/A SCALE: 1:2 |
| SHEET SIZE: D | SK3015-1051 SHEET 4 OF 4 |

# TRIGARD® **Monitoring System**

for Oxygen, Toxics and Combustible Gases

Trigard (non-XP)

_

CO:

AIT-02-801 w/ AE-02-801

_

H2S:

AIT-02-905 w/ AE-02-905

AIT-02-907 w/ AE-02-907

AIT-02-908 w/ AE-02-908

AIT-02-909 w/ AE-02-909

AIT-03-906 w/ AE-03-906

AIT-03-910 w/ AE-03-910

*The MSA TRIGARD Monitoring System is designed for monitoring toxic gases; combustible gases; and oxygen deficiency or enrichment. It is an affordable monitoring solution for a variety of applications, including water and wastewater plants, lab space, boiler rooms, commercial and general industry.*



## TRIGARD® Monitoring System for Oxygen, Toxics and Combustible Gases Features

- Stand-alone gas monitor for up to three MSA sensors
- Adjustable range
- Multiple sensor mounting options
- AC- or DC-powered
- On-board relays
- NEMA 4X design
- LCD display with highly visible LED indicators
- Piezo horn with horn silence button
- Long-life, MSA-designed sensors
- Simple push-button calibration
- Available as single-point or 3-point unit
- Optional battery backup

*Because every life has a* ***purpose...***

## Advanced Features

- **Sensor Disconnect Under Power**
  - MSA's patented feature allows for sensor change-out without declassifying a hazardous area.
- **Interchangeable Smart Sensors**
  - Pre-calibrated sensor modules are ready for installation out of the box. Sensors can be replaced in the field without the use of tools. The unit quickly recognizes the new sensor type and reconfigures alarm and relay settings to optimize the new sensor.
- **State-of-the-Art Display**
  - Liquid crystal display conveniently alternates between sensor reading and gas type, and features scrolling messaging, indicating ongoing diagnostic checks such as sensor "end-of-life" condition.
- **World-Class Design**
  - Features a single-board design for high reliability and easier serviceability.
  - Mounting enclosure is separate from the electronics and sensor, enabling problem-free installation and servicing.
- **Onboard LEDs and Relays**
  - "Quick-check" LEDs and four relay outputs allow for increased indication of alarm and fault conditions.
  - "Quick-check" LEDs, viewable from up to 50 feet, indicate NORMAL (green) and ALERT (red) status conditions.
  - Field-program-mable alarm levels and normally energized/de-energized, normally opened/closed and latching/non-latching relay functions offer three levels of alarm and a fault.
- **Options**
  - One or two strobes
  - Back-up battery
  - Internal power supply
- **Sensor Options**
  - Oxygen, toxic and combustible sensors
  - Integral mounting
  - Remote General Purpose
  - Remote Explosion Proof
  - Pre-wired shielded cable for sensors in 25, 50 and 100 ft. lengths (oxygen & toxic only)

| Specifications | |
|---|---|
| GAS TYPE | Toxic, oxygen and combustible (catalytic bead or infrared) |
| GAS SAMPLING | Diffusion |
| OUTPUT TYPE | 1 sensor: 4-20 mA, 3-wire or ModBus RTU;<br>2 or 3 sensors: ModBus RTU only |
| SENSOR LOCATION | Local or remote sensor (up to 100 ft.) |
| ENCLOSURE | General-purpose polycarbonate enclosure |
| SENSOR TEMPERATURE RANGE | 14˚F to 104˚F (typical) |
| ACCURACY | Repeatability +1% FS (typical) |
| SENSOR LIFE | 18 months to 2 years |
| RELAYS | 5 Amp SPDT; 4 relays (3 alarm, 1 fault) @220 VAC or 30 VDC |
| POWER INPUT | 12-30 VDC (standard), 100-256 VAC (optional) |
| ALARM TYPE | Piezo horn (95 dB) with horn silence button |
| BATTERY BACKUP | Optional (1,200 mAh) |
| ENVIRONMENTAL PROTECTION | Designed to meet NEMA 4X |






*Factory-assembled remote sensors are available in 25-, 50- and 100-foot lengths.*

**Note:** This bulletin contains only a general description of the products shown. While uses and performance capabilities are described, under no circumstances shall the products be used by untrained or unqualified individuals and not until the product instructions including any warnings or cautions provided have been thoroughly read and understood. Only they contain the complete and detailed information concerning proper use and care of these products.

**ID 07-2109-MC / September 2014**
**© MSA 2014 Printed in U.S.A.**

**MSA – The Safety Company**
1000 Cranberry Woods Drive,
Cranberry Township, PA 16066 USA
Phone 724-776-8600
**www.MSAsafety.com**

**U.S. Customer Service Center**
Phone 1-800-MSA-INST
Fax 1-800-967-0398

**MSA Canada**
Phone 1-800-672-2222
Fax 1-800-967-0398

**MSA Mexico**
Phone 01 800 672 7222
Fax 52-44 2227 3943

**MSA International**
Phone 724-776-8626
Toll Free 1-800-672-7777
Fax 724-741-1559
Email msa.international@msasafety.com

**A - TRIGARD -** 1 - 2 - 3 - 4 - 5 - 6 - 7 - 8 - 9 - 10 - 11 - 12 - 13

| 1 | 2 | 3 | 4 | 5 | 6 | 7 | 8 | 9 | 10 | 11 | 12 | 13 |
|---|---|---|---|---|---|---|---|---|---|---|---|---|
| Model Type<br>A = MSA 4X | Sensor Output<br>M=MODBUS<br>R=MILLIAMP OUTPUT 4-20, 3 WIRE | Power Supply Options<br>0=None<br>1=Internal 100-240 VAC/90 VDC | Battery Backup<br>0=None<br>B=Battery Installed | Sensor 1 Station<br>Check Sensor Label | Sensor 1 Option<br>0=External<br>1=10' Cable<br>2=25' Cable<br>3=100' Cable<br>4=2M3 (Channel Purpose Remote)<br>5=XX (Explosion Proof Remote) | Sensor 2 Station<br>Check Sensor Label | Sensor 2 Option<br>0=External<br>1=10' Cable<br>2=25' Cable<br>3=100' Cable<br>4=2M3 (Channel Purpose Remote)<br>5=XX (Explosion Proof Remote) | Sensor 3 Station<br>Check Sensor Label | Sensor 3 Option<br>0=External<br>1=10' Cable<br>2=25' Cable<br>3=100' Cable<br>4=2M3 (Channel Purpose Remote)<br>5=XX (Explosion Proof Remote) | Strobes<br>0=None<br>1=Red<br>2=Red and Amber | Enclosure Hardware<br>0=None<br>1=Sun Shield with Mounting Bracket<br>2=Mounting Bracket | Custom Features<br>0=None<br>1=Custom Operations Necessary |

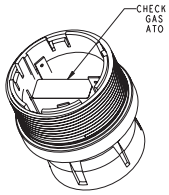


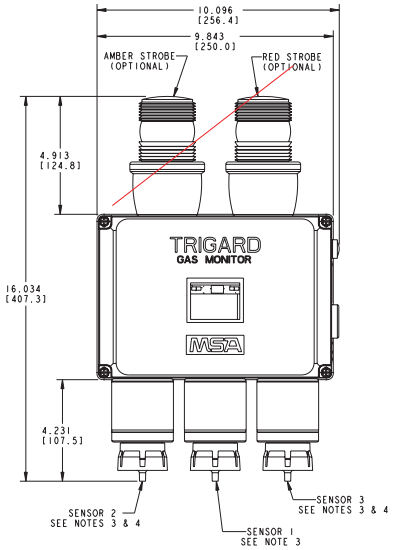


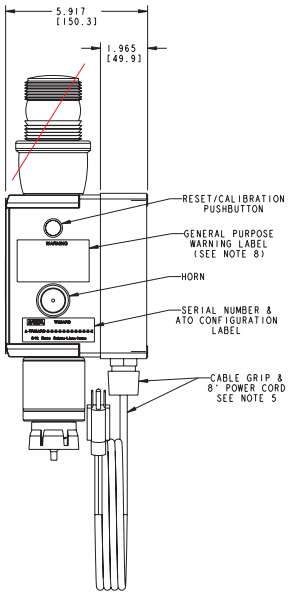


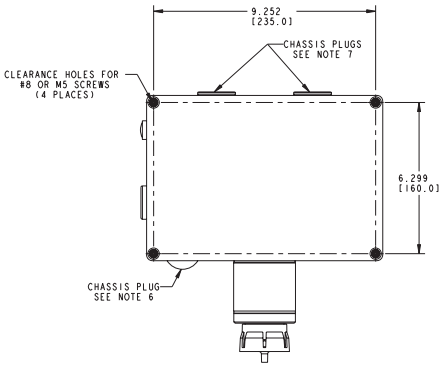


NOTE:
1. INSTRUMENT HOUSING IS MADE OF POLYCARBONATE PLASTIC.
2. DIMENSIONS SHOWN IN INCHES [MILLIMETERS].
3. SENSOR INLET MUST FACE DOWN.
4. OPTION ONLY AVAILABLE ON MODBUS OUTPUT UNITS.
5. ONLY AVAIABLE ON UNITS WITH INTERNAL AC POWER SUPPLY.
6. ONLY ON UNITS WITHOUT AC POWER CORD OPTION.
7. ONLY ON UNITS WITHOUT RED OR AMBER STROBES.
8. INSTRUMENT IS FOR USE IN NON-HAZARDOUS AREAS ONLY.
9. FOR "RG" OR "RX" SENSORS, WIRE NOT PROVIDED.
10. BATTERY LIFE 24 HOURS (MAX) WITH UP TO 3 ELECTROCHEMICAL SENSORS.
11. CONNECT BATTERY (+) LEAD PRIOR TO OPERATION.
12. DISCONNECT BATTERY (+) LEAD TO SHUT DOWN.
13. ALLOW SYSTEM TO CHARGE FOR 24 HOURS BEFORE USING.
14. ALARM RELAYS RATED: 5 AMPS @ 125 VAC (NON-INDUCTIVE), 5 AMPS @ 30 VDC (NON-INDUCTIVE).

| REVISIONS | | |
|---|---|---|
| 1 | 12-18-2008 | INITIAL RELEASE EXTENSIVELY REVISED |
| GJT | | ST |
| JAN 30 2009 | | |

**CUSTOMER** _____
**P.O. NO.** _____
**MSA NO.** _____
**LOCATION** _____
**TAG NO.** _____
**TOTAL NO. OF UNITS** _____

AUTHORIZED COUNTRY

MSA — MINE SAFETY APPLIANCES CO., PITTSBURGH, PA 15230, USA

MSA STANDARD SHOP PRACTICES APPLY

THIS DRAWING IS THE PROPERTY OF MSA AND IS MADE AVAILABLE TO YOU IN CONFIDENCE AND SUBJECT TO THE FOLLOWING: NO PERMISSION IS GRANTED TO PUBLISH, USE, REPRODUCE, TRANSMIT OR DISCLOSE THIS DRAWING, OR ANY INFORMATION CONTAINED THEREIN TO OTHERS WITHOUT THE PRIOR WRITTEN CONSENT OF MSA EXCEPT FOR THE MANUFACTURE OF ARTICLES FOR MSA SCHUTZWERKE NACH DIN 34 BEACHTEN. MSA AUER GmbH.

DO NOT SCALE DRG.

CODE SYMBOLS
CRITICAL ⚠
MAJOR A ⚠ MINOR (NO MARK)
MAJOR B ⚠
100 % INSPECTION ⚠

TOLERANCES UNLESS OTHERWISE SPECIFIED
FRACTIONAL ± 1/64
2 PL DEC. ± 0.01
3 PL DEC. ± 0.005
ANGULAR ± 1 deg.
SEE MSA STANDARD SHOP PRACTICES FOR DRILLED HOLE TOLERANCES

| | | |
|---|---|---|
| JOB NO. | 30010260 PH0729 | APPROVAL AGENCY CODE: NO \| NIOSH ATTR. DOC.: . |
| DRAWN BY | DATE | |
| GJT | 12-12-2005 | |
| CHECKED BY | | |
| M.BRADLEY | 1-29-09 | |
| PROJ. ENGR. | | |
| S.TURNER | 1-29-09 | |
| QUALITY ASSURANCE | | |
| J.DANNHARDT | 1-29-09 | |
| MANUFACTURING | | |
| J.BRYER | 1-29-09 | |

# INSTALLATION OUTLINE, TRIGARD

CADD REF: SK3015-1032 | SCALE: 1.000

D. | SK3015-1032 | SHEET 1 OF 7

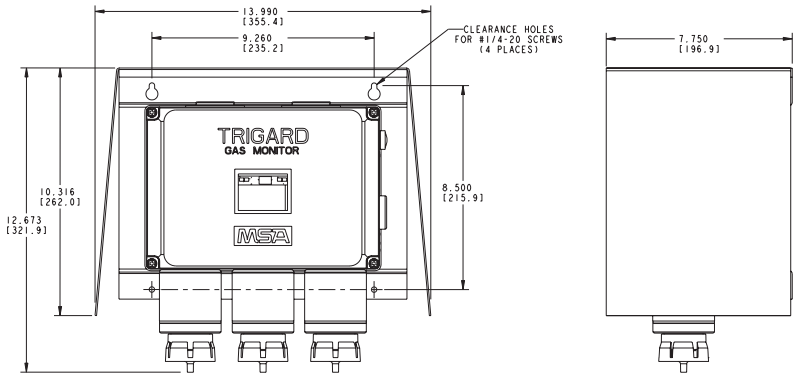


**SUN SHIELD (OPTIONAL)**
(NOT AVAILABLE WITH STROBE OPTIONS)

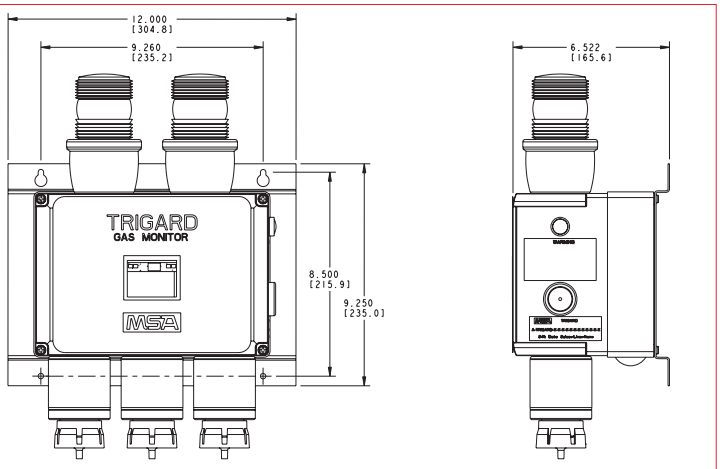


**MOUNTING BRACKET (OPTIONAL)**

REVISIONS
REV. 1
JAN 30 2009

AUTHORIZED COUNTRY

MSA
MSA STANDARD SHOP PRACTICES APPLY

MINE SAFETY APPLIANCES CO.
PITTSBURGH, PA 15230, USA

THIS DRAWING IS THE PROPERTY OF MSA AND IS MADE AVAILABLE TO YOU IN CONFIDENCE AND SUBJECT TO THE FOLLOWING: NO PERMISSION IS GRANTED TO PUBLISH, USE, REPRODUCE, TRANSMIT OR DISCLOSE THIS DRAWING, OR ANY INFORMATION CONTAINED THEREIN TO OTHERS WITHOUT THE PRIOR WRITTEN CONSENT OF MSA EXCEPT FOR THE MANUFACTURE OF ARTICLES FOR MSA SCHUTZVERMERK NACH DIN 34 BEACHTEN. MSA AUER GmbH.

DO NOT SCALE DRG.

CODE SYMBOLS
CRITICAL ⚠
MAJOR A ⚠ MINOR (NO MARK)
MAJOR B ⚠
100 % INSPECTION ⚠

TOLERANCES UNLESS OTHERWISE SPECIFIED
FRACTIONAL ± 1/64
2 PL DEC. ± 0.01
3 PL DEC. ± 0.005
ANGULAR ± 1 deg.
REF. MSA STANDARD SHOP PRACTICES FOR DRILLED HOLE TOLERANCES

JOB NO. 30010260 PH0729
DRAWN BY — DATE
GJT 12-12-2005
CHECKED BY
M.BRADLEY 1-29-09
PROJ. ENGR.
S.TURNER 1-29-09
QUALITY ASSURANCE
J.DANNHARDT 1-29-09
MANUFACTURING
J.BRYER 1-29-09

APPROVAL AGENCY CODE: NO | NIOSH ATTR. DOC.: .

# INSTALLATION OUTLINE, TRIGARD

CADD REF: SK3015-1032
SCALE: 1.000

D.
SK3015-1032
SHEET 2 OF 7

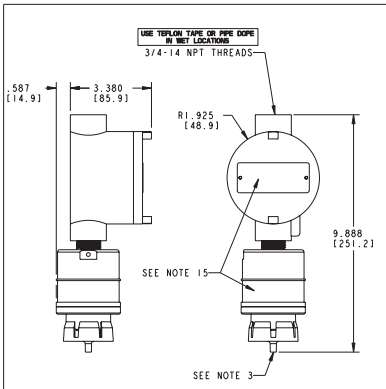


**EXPLOSION PROOF XE REMOTE**
(RX OPTION)

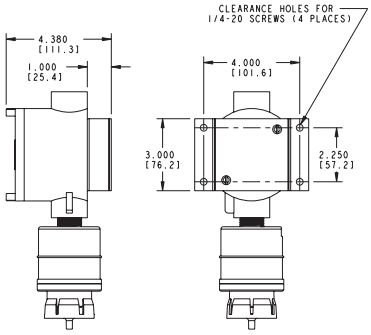


**XE REMOTE WITH OPTIONAL MOUNTING BRACKET**
MOUNTING BRACKET PART NUMBER 10047562

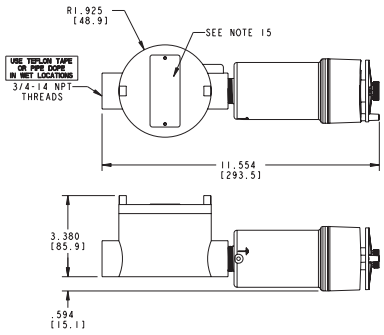


**EXPLOSION PROOF XIR REMOTE**
(RX OPTION)
XIr SENSOR MUST BE MOUNTED AS SHOWN

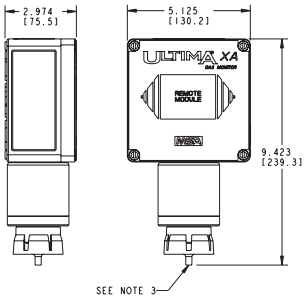


**GENERAL PURPOSE XA REMOTE**
(RG OPTION)
SEE NOTE 8

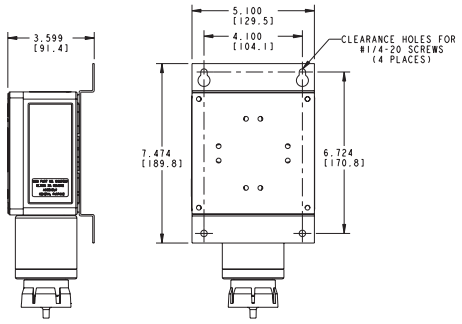


**XA REMOTE WITH OPTIONAL MOUNTING BRACKET**
MOUNTING BRACKET PART NUMBER 10047561

NOTES:(Continued)
15. CHECK TAG FOR AREA CLASSIFICATION.

REVISIONS
REV. 1
JAN 30 2009

| | | | |
|---|---|---|---|
| AUTHORIZED COUNTRY | MSA — MINE SAFETY APPLIANCES CO., PITTSBURGH, PA 15230, USA | THIS DRAWING IS THE PROPERTY OF MSA AND IS MADE AVAILABLE TO YOU IN CONFIDENCE AND SUBJECT TO THE FOLLOWING: NO PERMISSION IS GRANTED TO PUBLISH, USE, REPRODUCE, TRANSMIT OR DISCLOSE THIS DRAWING, OR ANY INFORMATION CONTAINED THEREIN TO OTHERS WITHOUT THE PRIOR WRITTEN CONSENT OF MSA EXCEPT FOR THE MANUFACTURE OF ARTICLES FOR MSA SCHUTZWERKE NACH DIN 34 BEACHTEN. MSA AUER GmbH. | DO NOT SCALE DRG. |
| | MSA STANDARD SHOP PRACTICES APPLY | JOB NO. 30010260 PH0729 | APPROVAL AGENCY CODE: NO [NIOSH ATTR. DOC.: . |
| | CODE SYMBOLS | DRAWN BY GJT 12-12-2005 | INSTALLATION OUTLINE, TRIGARD |
| | CRITICAL ⚠ MAJOR A ⚠ MINOR (NO MARK) MAJOR B ⚠ 100 % INSPECTION ⚠ | CHECKED BY M.BRADLEY 1-29-09 | |
| | | PROJ. ENGR. S.TURNER 1-29-09 | |
| | TOLERANCES UNLESS OTHERWISE SPECIFIED | QUALITY ASSURANCE J.DANNHARDT 1-29-09 | |
| | FRACTIONAL ± 1/64 | MANUFACTURING J.BRYER 1-29-09 | CADD REF: SK3015-1032 — SCALE: 1.000 |
| | 2 PL DEC. ± 0.01 | | |
| | 3 PL DEC. ± 0.005 | | |
| | ANGULAR ± 1 deg. | D. | SK3015-1032 — SHEET 3 OF 7 |
| | SEE MSA STANDARD SHOP PRACTICES FOR DRILLED HOLE TOLERANCES | | |

REVISIONS
REV. 1
JAN 30 2009

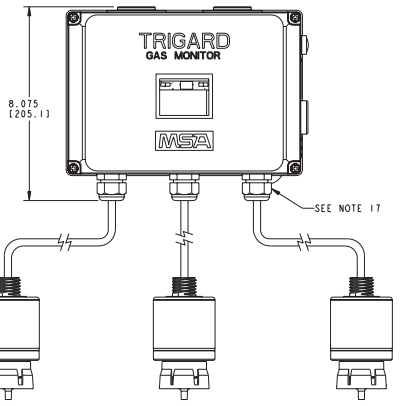


TRIGARD SHOWN WITH 25', 50' AND 100' SENSOR OPTIONS

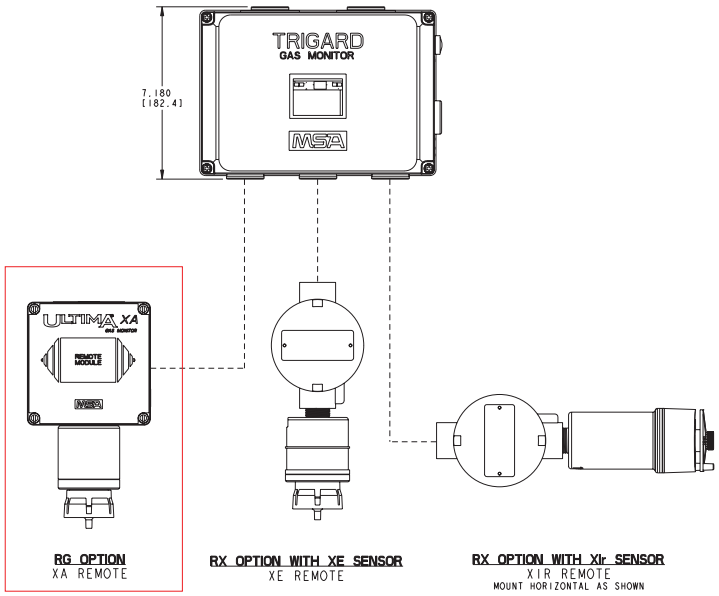


TRIGARD SHOWN WITH "RG" AND "RX" SENSOR OPTIONS
(SEE NOTE 18)

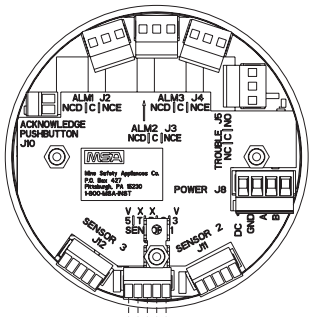


XE/XIR COMBUSTIBLE SENSORS

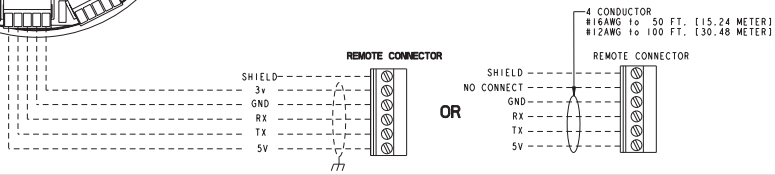


NOTES:(Continued)
16. - - - - - INDICATES FIELD CONNECTIONS BY OTHERS.
17. CABLE GLANDS SUPPLIED WITH 25', 50' AND 100' SENSOR OPTIONS ONLY.
18. REMOTE WIRING DISTANCE IS 100 FT. [30.48 METERS] MAX.

| | | | |
|---|---|---|---|
| AUTHORIZED COUNTRY | MSA | MINE SAFETY APPLIANCES CO. PITTSBURGH, PA 15230, USA | THIS DRAWING IS THE PROPERTY OF MSA AND IS MADE AVAILABLE TO YOU IN CONFIDENCE AND SUBJECT TO THE FOLLOWING: NO PERMISSION IS GRANTED TO PUBLISH, USE, REPRODUCE, TRANSMIT OR DISCLOSE THIS DRAWING, OR ANY INFORMATION CONTAINED THEREIN TO OTHERS WITHOUT THE PRIOR WRITTEN CONSENT OF MSA EXCEPT FOR THE MANUFACTURE OF ARTICLES FOR MSA SCHUTZVERMERK NACH DIN 34 BEACHTEN. MSA AUER GmbH. |
| | MSA STANDARD SHOP PRACTICES APPLY | | DO NOT SCALE DRG. |
| | CODE SYMBOLS | JOB NO. 30010260 PH0729 | APPROVAL AGENCY CODE: NO \| NIOSH ATTR. DOC.: . |
| | CRITICAL ⚠ | DRAWN BY DATE GJT 12-12-2005 | |
| | MAJOR A ⚠ MINOR (NO MARK) | CHECKED BY M.BRADLEY 1-29-09 | INSTALLATION OUTLINE, TRIGARD |
| | MAJOR B ⚠ | PROJ. ENGR. S.TURNER 1-29-09 | |
| | 100 % INSPECTION ⚠ | QUALITY ASSURANCE J.DANNHARDT 1-29-09 | |
| | TOLERANCES UNLESS OTHERWISE SPECIFIED | MANUFACTURING J.BRYER 1-29-09 | CADD REF: SK3015-1032 SCALE: 1.000 |
| | FRACTIONAL ± 1/64 | | |
| | 2 PL DEC. ± 0.01 | | |
| | 3 PL DEC. ± 0.005 | | |
| | ANGULAR ± 1 deg. | | |
| | REF. MSA STANDARD SHOP PRACTICES FOR DRILLED HOLE TOLERANCES | D. | SK3015-1032 SHEET 4 OF 7 |

| REVISIONS |
|---|
| REV. 1 |
| JAN 30 2009 |

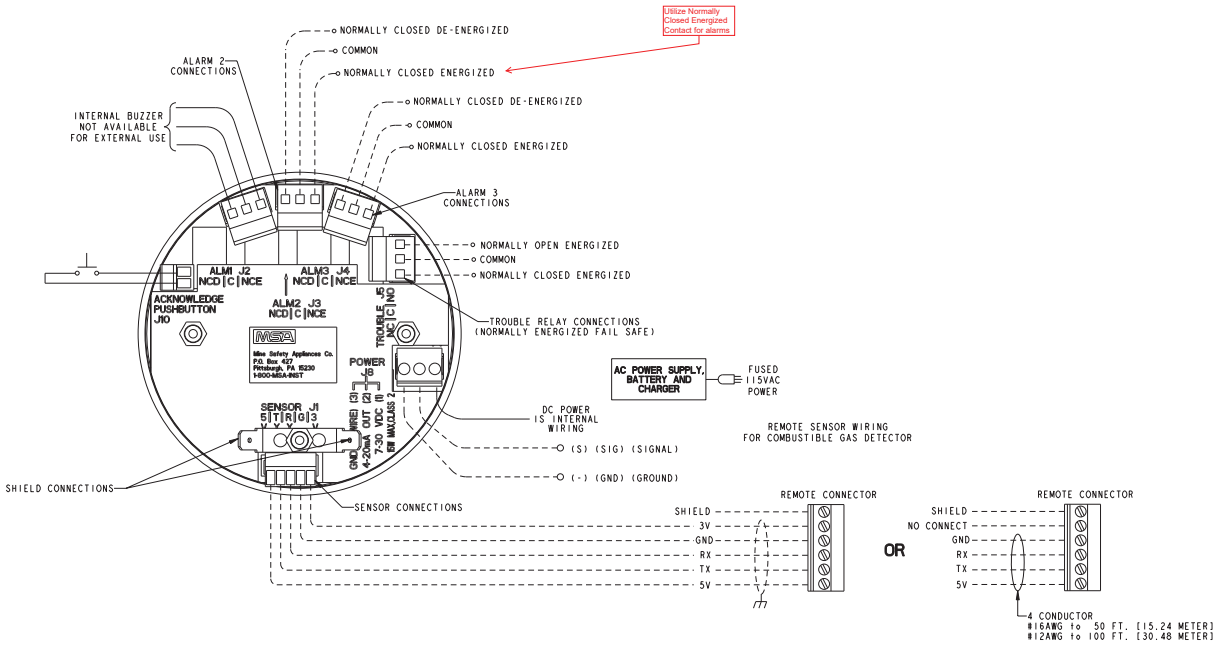


**Milliamp** P.C. BOARD ASSEMBLY SHOWN

XE/XIR COMBUSTIBLE SENSORS

| COLOR CODE | | | |
|---|---|---|---|
| BLACK | = K | GREEN | = G |
| BROWN | = N | BLUE | = B |
| RED | = R | VIOLET | = V |
| ORANGE | = O | GRAY | = A |
| YELLOW | = Y | WHITE | = W |
| PINK | = P | TAN | = T |

| | | | |
|---|---|---|---|
| AUTHORIZED COUNTRY | MSA | MINE SAFETY APPLIANCES CO. PITTSBURGH, PA 15230, USA | THIS DRAWING IS THE PROPERTY OF MSA AND IS MADE AVAILABLE TO YOU IN CONFIDENCE AND SUBJECT TO THE FOLLOWING: NO PERMISSION IS GRANTED TO PUBLISH, USE, REPRODUCE, TRANSMIT OR DISCLOSE THIS DRAWING, OR ANY INFORMATION CONTAINED THEREIN TO OTHERS WITHOUT THE PRIOR WRITTEN CONSENT OF MSA EXCEPT FOR THE MANUFACTURE OF ARTICLES FOR MSA SCHUTZVERMERK NACH DIN 34 BEACHTEN. MSA AUER GmbH. |
| | MSA STANDARD SHOP PRACTICES APPLY | | DO NOT SCALE DRG. |
| | CODE SYMBOLS: CRITICAL ⚠, MAJOR A ⚠, MAJOR B ⚠, 100 % INSPECTION ⚠, MINOR (NO MARK) | JOB NO. 30010260 PH0729 | APPROVAL AGENCY CODE: NO \| NIOSH ATTR. DOC.: . |
| | | DRAWN BY / DATE: GJT 12-12-2005 | INSTALLATION OUTLINE, TRIGARD |
| | | CHECKED BY: M.BRADLEY 1-29-09 | |
| | | PROJ. ENGR.: S.TURNER 1-29-09 | |
| | TOLERANCES UNLESS OTHERWISE SPECIFIED: FRACTIONAL ± 1/64; 2 PL DEC. ± 0.01; 3 PL DEC. ± 0.005; ANGULAR ± 1 deg. | QUALITY ASSURANCE: J.DANNHARDT 1-29-09 | |
| | REF. MSA STANDARD SHOP PRACTICES FOR DRILLED HOLE TOLERANCES | MANUFACTURING: J.BRYER 1-29-09 | CADD REF: SK3015-1032 \| SCALE: 1.000 |
| | | D. | SK3015-1032 \| SHEET 6 OF 7 |

| REVISIONS |
|---|
| REV. 1 |
| JAN 30 2009 |

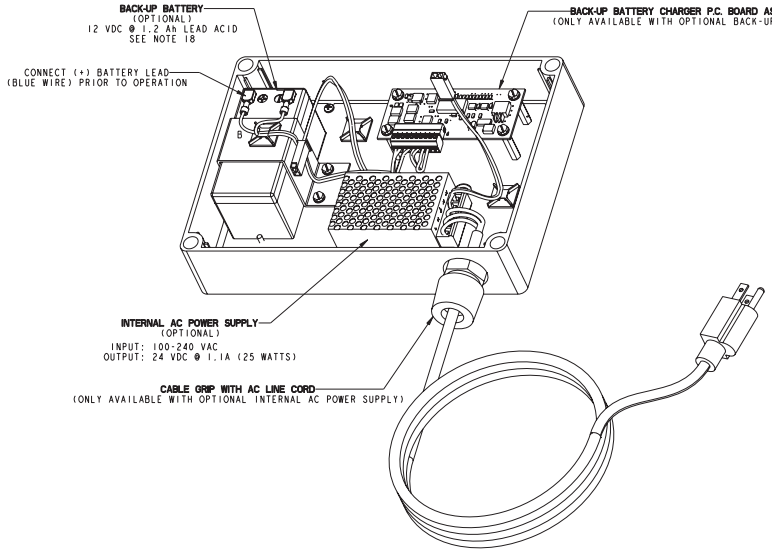


NOTES:(Continued)

18. BATTERY BACKUP RUNTIME VARIES WITH TEMPERATURE, SENSOR CONFIGURATION AND BATTERY CONDITION. RUNTIME WITH 1 TOXIC SENSOR IS 24 HOURS MINIMUM AT ROOM TEMPERATURE. RUNTIME WITH 2 COMBUSTIBLE XIR UNITS AND 1 TOXIC SENSOR IS 20 MINUTES MINIMUM AT ROOM TEMPERATURE.

| COLOR CODE | | | |
|---|---|---|---|
| BLACK | = K | GREEN | = G |
| BROWN | = N | BLUE | = B |
| RED | = R | VIOLET | = V |
| ORANGE | = O | GRAY | = A |
| YELLOW | = Y | WHITE | = W |
| PINK | = P | TAN | = T |

AUTHORIZED COUNTRY

MSA — MINE SAFETY APPLIANCES CO., PITTSBURGH, PA 15230, USA

MSA STANDARD SHOP PRACTICES APPLY

THIS DRAWING IS THE PROPERTY OF MSA AND IS MADE AVAILABLE TO YOU IN CONFIDENCE AND SUBJECT TO THE FOLLOWING: NO PERMISSION IS GRANTED TO PUBLISH, USE, REPRODUCE, TRANSMIT OR DISCLOSE THIS DRAWING, OR ANY INFORMATION CONTAINED THEREIN TO OTHERS WITHOUT THE PRIOR WRITTEN CONSENT OF MSA EXCEPT FOR THE MANUFACTURE OF ARTICLES FOR MSA SCHUTZWERKE NACH DIN 34 BEACHTEN. MSA AUER GmbH.

DO NOT SCALE DRG.

CODE SYMBOLS
CRITICAL ⚠
MAJOR A ⚠ MINOR (NO MARK)
MAJOR B ⚠
100 % INSPECTION ⚠

TOLERANCES UNLESS OTHERWISE SPECIFIED
FRACTIONAL ± 1/64
2 PL DEC. ± 0.01
3 PL DEC. ± 0.005
ANGULAR ± 1 deg.
SEE MSA STANDARD SHOP PRACTICES FOR DRILLED HOLE TOLERANCES

JOB NO. 30010260 PH0729

| | DRAWN BY | DATE |
|---|---|---|
| | GJT | 12-12-2005 |
| CHECKED BY | M.BRADLEY | 1-29-09 |
| PROJ. ENGR. | S.TURNER | 1-29-09 |
| QUALITY ASSURANCE | J.DANNHARDT | 1-29-09 |
| MANUFACTURING | J.BRYER | 1-29-09 |

APPROVAL AGENCY CODE: NO | NIOSH ATTR. DOC.: .

# INSTALLATION OUTLINE, TRIGARD

CADD REF: SK3015-1032 — SCALE: 1.000

D. — SK3015-1032 — SHEET 7 OF 7

REVIEWED BY CONTRACTOR

Kudlik Construction Ltd.

NAME: Sandra Rousseau P.Eng
DATE: Jul 25, 2018

NORCLAIR
MÉCANIQUE DE PROCÉDÉ

# TDS AND SHOP DRAWINGS

## DA-IC-10 – (NAS and UPS)

**Date :** 2018-07-25

| INFORMATION | |
|---|---|
| Project : **WASTEWATER PLANT - IQALUIT** | |
| Client : Kudlik Construction Ltd.<br>To Sandra Rousseau P.Eng./ Project Manager | Project number : **2018-062** |
| Contractor : Norclair inc. | Project number Norclair : **P1039** |
| Address : 1100, Montee Masson, Laval, QC, Canada H7E 4P2 | |
| Project Manager : Dominic Papineau | E-mail: dpapineau@norclair.ca |
| Phone: 450-688-4012 # 720 | Cell.: 514-409-1832 |

| Information, subcontractor or supplier | |
|---|---|
| Sub supplier : Entreprises L.M. | |
| Contact : Marion Fleury | Phone : (514) 521-0882 |

| Information on the equipment | |
|---|---|
| Speciality : **Instrumentation and Control** | |
| Equipment : **NAS and UPS** | |
| Drawing reference : | |
| Specification reference : **47 10 02** (Page 2 / XX) | Division : |
| Article : | Number of pages: |

## CONSULTANT APPROVAL

Comments within.

STANTEC PROJECT #: 110126045

This review by Stantec is for general conformance with the design concept of Stantec's design of the:

- ☐ Architectural
- ☐ Structural
- ☐ Mechanical
- ☐ Electrical
- ☑ Other Instrumentation

component(s) only and does not mean that Stantec has verified or approves the shop drawing(s). The Contractor remains solely responsible for the shop drawing(s) and this review by Stantec does not relieve the Contractor of the Contractor's responsibility for errors or omissions in the shop drawing(s) or for meeting all requirements of the contract documents. This review does not mean that Stantec approves the detailed design inherent in the shop drawing, responsibility for which shall remain with the Contractor submitting same, nor does this review mean that Stantec accepts any deviation of the shop drawing(s) from the contract documents. The Contractor is responsible for confirming all dimensions and correlating them at the job site, for all construction means, methods and techniques, and for coordination of construction work of all trades, including coordination of all shop drawings.

SUBMITTAL # DA-IC-10 (2018-07-25)

Stantec

- ☐ REVIEWED
- ☑ REVIEWED, AS NOTED
- ☐ REVISE AND RESUBMIT
- ☐ NOT REVIEWED

DATE 2018-JUL-25

BY David Hutchison, P.Eng.

1100, Montée Masson
Laval, QC, Canada
H7E 4P2

Phone. : 450-688-4012
Fax : 450-661-6341
E-Mail : info@norclair.ca
www.norclair.ca

# My Cloud™ EX2 Ultra
## NAS

High-performance backup, sharing, syncing and access from anywhere.



Keep your media in a single place on this high-performance NAS solution, and access it from anywhere. With My Cloud EX2 Ultra NAS, you'll be able to automatically sync content across computers, easily share files and folders, and enjoy multiple backup options so you can create your own personalized system with ease.



# My Cloud EX2 Ultra
NAS



## Product Features

### Centralized storage for anywhere access
Keep your photos, videos, music and documents in a single place, and with MyCloud.com or the My Cloud app, you can access or share from anywhere with an internet connection.

### Multiple RAID options
My Cloud EX2 Ultra NAS features a variety of RAID settings, so you can customize your system with the configuration that's best for you. Options include RAID 0 for enhanced performance, RAID 1 for mirrored data protection, as well as JBOD and spanning support for non-RAID configurations.

### Featuring ultra-reliable WD Red™ NAS drives
My Cloud EX2 Ultra comes pre-configured with WD Red™ hard drives, specifically built for NAS systems to provide improved performance within 24×7 environments. The My Cloud EX2 Ultra is also available in a diskless version to create a custom NAS with compatible hard drives.

### Updated for high-performance
Upgraded with the powerful Marvell® ARMADA™ 385 1.3GHz dual-core processor, you'll get ultra-fast transfer rates and high-performance streaming. You'll also be treated to 1GB of DDR3 memory, allowing you to multitask with ease.

### Smooth media streaming
Enjoy high-performance streaming with this powerful NAS system. Combined with the Plex™ Media Server, your HD content will be organized and prepared for streaming to your PC, mobile device, game console, or other certified media player.

### Powered by My Cloud OS 3 software
WD's My Cloud OS 3 comes with a variety of tools and apps. Create a folder to share content with family and friends. Automatically synchronize your data between all your computers and make sure your content is always up to date. Easily transfer content between your NAS and a supported cloud service like Dropbox™, OneDrive, or Google Drive™.*

### Sync your content across all your computers
With WD Sync, you can automatically synchronize your media and files across your computers and your My Cloud device, so you can be confident your content is always up to date and accessible with all your devices.

### Keep an eye on your home, wherever you're at
Equipped with award-winning Milestone ARCUS™ Surveillance software, delivering a powerful surveillance system for your home. Compatible with thousands of industry-leading cameras, support for up to 10 connected cameras and two (2) free camera licenses included, making this NAS the perfect surveillance solution to keep watch on what matters to you most.

### Enhanced data protection
With backup software like WD SmartWare™ or Acronis, PC users can customize when and where their content is saved, while Mac users have full access to Apple Time Machine for personalized backup. You can even automatically back up your data to a separate My Cloud NAS device, or any supported cloud service like Amazon S3, ElephantDrive or Acronis*. 256-bit AES volume encryption, when enabled, helps to securely store files across your entire network.

### Customize your NAS with popular apps
My Cloud EX2 Ultra supports a full suite of popular applications for a personalized experience. Use apps like Plex, Milestone ARCUS Surveillance, Dropbox, WordPress, and more*.

**My Cloud™**
Mobile App

## Product Specifications

**INTERFACE**
Gigabit Ethernet
USB 3.0 expansion port (x2)

**DIMENSIONS**

| | |
|---|---|
| Height: | 6.75 in (171.45 mm) |
| Depth: | 6.10 in (154.94 mm) |
| Width: | 3.90 in (99.06 mm) |
| Weight: | 20TB 5.1 lbs (2.32kg) |
| | 16TB 5.0 lbs (2.3kg) |
| | 12TB 5.2 lbs (2.4 kg) |
| | 8TB 5.0 lbs (2.3kg) |
| | 6TB 4.61 lbs (2.0 |
| | 4TB 3.4 lbs (1.6k |
| | 0TB 1.8 lbs (0.8 |

**SYSTEM REQUIREMENTS**
- Windows 10, Windows 8, Windows 7 or Windows Vista operating systems
- Mac OS X El Capitan, Yosemite, Mavericks or Mountain Lion operating systems
- DLNA™/UPnP™ devices for streaming
- Router for Internet connection
- Internet Explorer 10 or higher
- Safari 6 or higher
- Firefox™ 30 or higher
- Google Chrome™ 31 or higher on supported Windows and Mac OS platforms

*Compatibility may vary depending on user's hardware configuration and operating systems.*

**CAPACITIES AND MODELS**
20TB WDBVBZ0200JCH
16TB WDBVBZ0160JCH
12TB WDBVBZ0120JCH
8TB WDBVBZ0080JCH
6TB WDBVBZ0060JCH
4TB WDBVBZ0040JCH
0TB WDBVBZ0000NCH

16TB version required.
8TB usable space @ RAID 1 requires x2 disk capacity

**KIT CONTENTS**
Network Attached Storage
Ethernet cable
AC adapter
Quick Install Guide

**OPERATING SPECIFICATION**
Operating temperature: 5°C
Non-op. temperature: -20°C to 65°C

**ED WARRANTY**
onfigured
3 years Worldwide

Diskless
2 years Worldwide



WD, the WD logo, My Cloud, WD Red, WD SmartWare and WD Sync are registered trademarks or trademarks of Western Digital Corporation or its affiliates in the U.S. and/or other countries. All other marks that may be mentioned herein are the property of their respective owners. Product specifications subject to change without notice. Pictures shown may vary from actual product.
© 2017 Western Digital Corporation or its affiliates.
*App or Cloud service registration may be required. App or Cloud services may be changed, terminated or interrupted at any time and may vary by country.
As used for storage capacity, one terabyte (TB) = one trillion bytes. Total accessible capacity varies depending on operating environment and RAID/JBOD configuration.
As used for transfer rate or interface, megabyte per second (MB/s) = one million bytes per second, and gigabit per second (Gb/s) = one billion bits per second.

4178-707149-A01 June 2017

Product Brochure




# Eaton 5S UPS

**The energy-efficient UPS for desktops and workstations.**

## Eaton® 5S features and benefits:

**Power management:** Enhance your power protection capabilities and ensure safe system shutdown with the Eaton UPS Companion software. The 5S interface is auto-recognized when plugged into computers with Windows, Macintosh and Linux environments.

**LCD display:** Access critical UPS information including battery time and outage tracking in a single screen view with the user friendly LCD.

**Data protection:** Safeguard your work and data with the UPS Companion software by gracefully shutting down your equipment during power outages.

**Eco-Control:** Save up to 30 percent on energy consumption by shutting down non-essential peripherals when the computer is turned off.

**Convenient form factor:** Fit the 5S easily into tight spaces with its slim form factor. The versatile 5S can be used as a tower or as a desktop monitor stand.

**Surge protection:**
Provide surge protection for network phone lines, cable TV and satellite applications.

**Battery health check:**
Schedule daily, weekly or monthly health checks to verify battery performance and ensure that it delivers power during the next outage.

## Eaton UPS Companion software:

The Eaton UPS Companion software provides safe system shutdown for small offices and residential users looking for an easy way to enhance the protection capabilities of their Eaton UPS. In addition, the Eaton UPS Companion provides energy usage and cost data, resulting in a better understanding of the power requirements of the protected equipment.

The main features of the UPS Companion software:

- Safe system shutdown
- Energy use and cost reporting
- Easy access to UPS status and events
- Configuration of UPS parameters
- Multiple language support
- Automatic software updates



**The 5S fits in small spaces and can also be used as a monitor stand.**

*Powering Business Worldwide*

## 5S UPS MODEL SELECTION GUIDE*

| Catalog number | Rating (VA/watts) | Input connection | Output receptacles | Dimensions (H x W x D), in | Net weight, lb | LCD | Eco Control |
|---|---|---|---|---|---|---|---|
| **Tower 120V, 50/60 Hz models** | | | | | | | |
| 5S550 | 550/330 | 5-15P | (8) 5-15R | 9.8 x 3.4 x 10.2 | 12.3 | No | No |
| 5S700 | 700/420 | 5-15P | (8) 5-15R | 9.8 x 3.4 x 10.2 | 14.3 | No | No |
| 5S700LCD | 700/420 | 5-15P | (8) 5-15R | 9.8 x 3.4 x 10.2 | 13.1 | Yes | Yes |
| 5S1000LCD | 1000/600 | 5-15P | (10) 5-15R | 9.8 x 3.4 x 15.0 | 21.4 | Yes | Yes |
| 5S1500LCD | 1500/900 | 5-15P | (10) 5-15R | 9.8 x 3.4 x 15.0 | 25.5 | Yes | Yes |
| **Tower 208 or 230V 50/60 Hz models** | | | | | | | |
| 5S700G | 700/420 | C14 | (6) C13 | 9.8 x 3.4 x 10.2 | 13.1 | No | No |
| 5S1500G | 1500/900 | C14 | (8) C13 | 9.8 x 3.4 x 15.0 | 24.6 | No | No |

*For complete battery runtimes, please visit Eaton.com/5S.

## Services and support

Eaton provides product support 24 hours a day, 7 days a week. From battery replacement to full UPS service plans, Eaton has one of the top service models in the industry.

## Three-year warranty

The 5S warranty covers both UPS and the batteries for three years. No other manufacturer in the industry offers a warranty as comprehensive.

### What's in the box

- 5S UPS
- USB cable
- User manual

## 5S UPS front panel




*Model displayed above: 5S1500LCD*

## 5S UPS rear panel

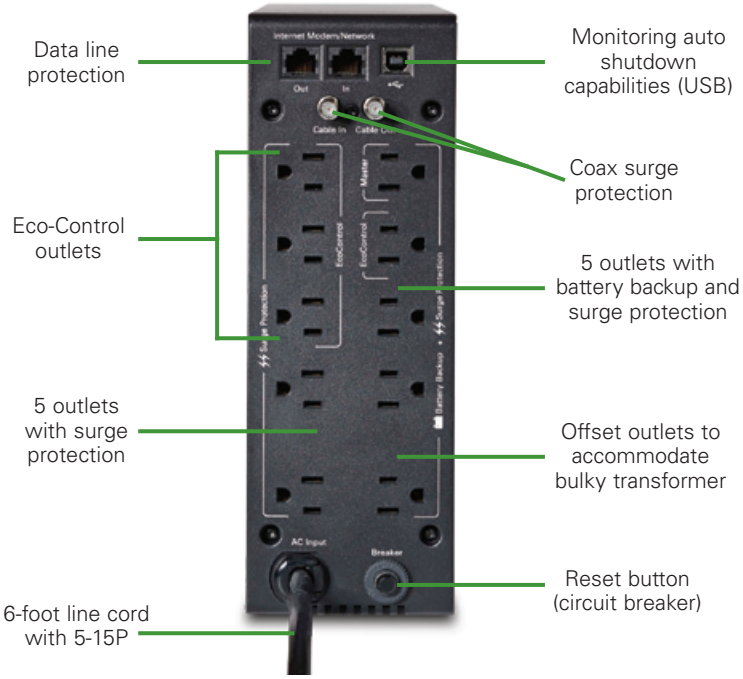


To interact with the Eaton 5S UPS, please visit:
**Eaton.com/5S**

**Eaton**
Electrical Sector
1000 Eaton Boulevard
Cleveland, OH 44122 USA
Eaton.com

Powerquality.eaton.com

©2013 Eaton
All Rights Reserved
Printed in USA
BR153014EN
May 2013

Eaton is a registered trademark of Eaton Corporation.

All other trademarks are property of their respective owners.

Powering Business Worldwide

REVIEWED BY CONTRACTOR

Kudlik Construction Ltd.

NAME: Sandra Rousseau P.Eng

DATE: Oct 16, 2018

NORCLAIR
MÉCANIQUE DE PROCÉDÉ

# SHOP DRAWINGS

**DA-IC-11 Emergency shut down (ESD)**

**Date :** 2018-10-16

| **Information general** | |
|---|---|
| Project : **WWTP UPGRADE - IQALUIT** | |
| Client : Kudlik Construction Ltd.<br>To : Sandra Rousseau P.Eng., Project Manager | Project number : **2018-062**<br>E-mail : srousseau@kudlik.biz |
| Contractor : **Norclair inc.** | Project number Norclair : **P1039** |
| Address : 1100, Mountain Masson, Laval, QC, Canada H7E 4P2 | |
| Project Manager : Dominic Papineau, Project Manager | E-mail: dpapineau@norclair.ca |
| Phone : 450-688-4012 # 720 | Cell. : 514-409-1832 |

| **Information, subcontractor or supplier** | |
|---|---|
| Sub/supplier : Quantum Electrique | |
| Contact : | Phone : |

| **Information on the equipment** | |
|---|---|
| Speciality : **Instrumentation and Control** | |
| Equipment : Emergency shut down (ESD) | |
| Drawing reference : I501 | |
| Specification reference : : | Division : |
| Article : | Number of pages : 7 |

**CONSULTANT APPROVAL**

Comments within.

STANTEC PROJECT #: 110126045

SUBMITTAL # DA-IC-11 (2018-10-16)

This review by Stantec is for general conformance with the design concept of Stantec's design of the:

☐ Architectural ☐ Structural ☐ Mechanical ☑ Electrical ☑ Other Instrumentation

component(s) only and does not mean that Stantec has verified or approves the shop drawing(s). The Contractor remains solely responsible for the shop drawing(s) and this review by Stantec does not relieve the Contractor of the Contractor's responsibility for errors or omissions in the shop drawing(s) or for meeting all requirements of the contract documents. This review does not mean that Stantec approves the detailed design inherent in the shop drawing, responsibility for which shall remain with the Contractor submitting same, nor does this review mean that Stantec accepts any deviation of the shop drawing(s) from the contract documents. The Contractor is responsible for confirming all dimensions and correlating them at the job site, for all construction means, methods and techniques, and for coordination of construction work of all trades, including coordination of all shop drawings.

Stantec

☐ REVIEWED

☑ REVIEWED, AS NOTED

☐ REVISE AND RESUBMIT

☐ NOT REVIEWED

DATE 2018-10-23

BY David Hutchison

1100, montée Masson
Laval, QC, Canada
H7E 4P2

Phone. : 450-688-4012
Fax : 450-661-6341
E-Mail : info@norclair.ca
www.norclair.ca

Hazardous location
3x

# 4C EDS / EFS Series Control Stations

## FlexStation™ Control Station Components

Cl. I, Div. 1 & 2, Groups B (Div. 2 only) C, D
Cl. II, Div. 1 & 2, Groups E, F, G
Cl. III
Zone 1 & 2 Group IIB
NEMA 3R, 7B* (Div. 2) CD, 9 EFG, 12



## Applications:

Five modular components – operators, contact blocks, covers, legend plates, and bodies – are combined to provide a variety of control stations which are:

- For use indoors or outdoors, in areas which are hazardous due to the presence of flammable gases and vapors, or combustible dust.
- Used in conjunction with magnetic starters or contactors for remote control of motors and other electrical apparatus.
- For installation in petroleum refineries, chemical, petrochemical, and other industrial process facilities; grain processing and storage facilities; and other heavy industrial applications where Class I, Class II, or Class III hazards are present.

## Features:

- Momentary contact pushbuttons, maintained contact pushbuttons, and pilots lights offer a choice of functions.
- Selector switches in 2 or 3 position configurations including keyed and spring return options.
- Single-hole, two-hole, and three-hole covers for one, two, or three devices respectively per station.
- Rugged control devices for safe, reliable operation in industrial applications.
- Bodies, with extra room for wire pulling and termination, also include two integral mounting feet for fast, secure installation.
- Bodies have ½", ¾", or 1" dead-end or through-feed conduit hubs with integral bushing for protection of wire insulation.
- Covers and bodies are available in *Feraloy*® or copper-free aluminum for light weight and corrosion resistance.
- DL legend plates have large lettering to give clear indication of device function. Space is available for field markings.

## Certifications and Compliances:

- NEC
  - Class I, Division 1 & 2, Groups B* (Div. 2), C, D
  - Class II, Division 1 & 2, Groups E, F, G
  - Class III
- Zone 1 & 2 Group IIB*
- NEMA: 3R, 7B (Div. 2) CD, 9EFG, 12
- UL Standard: 1203

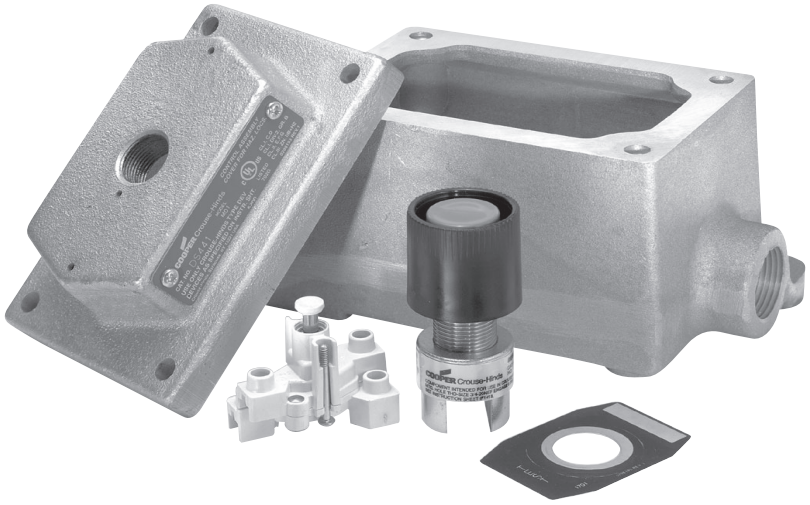

## Standard Materials:

- Bodies, covers – *Feraloy*® or copper-free aluminum.
- Pushbuttons and guards – Type 6 / 6 nylon.
- Operating shafts, bearings – stainless steel.

## Standard Finishes:

- *Feraloy*® iron alloy – electrogalvanized and aluminum acrylic paint.
- Copper-free aluminum – natural.
- Stainless steel – natural.

## Options:

| Description | Suffix |
|---|---|
| Copper-free aluminum bodies and covers<br>Corro-free™ epoxy finish for use in severely corrosive environments. FlexStation covers and bodies. | SA<br>S752 |

## Electrical Ratings:

- Pushbuttons and selector switches – 600 VAC heavy duty (NEMA A600).
- Pilot lights – 120 VAC.

## Dimensions
### In Inches:

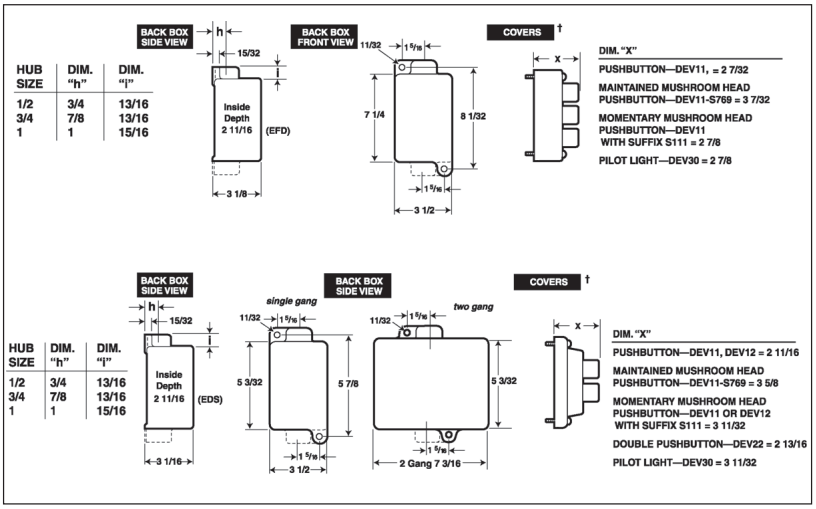


†Covers have same length and width as back boxes.
*For Class I, Division 1, Group B or Zone 1 Hydrogen applications, use the EFS(C) complete control station catalog numbers see page 528.

 Copyright© 2013 Eaton's Crouse-Hinds Business

Crouse-Hinds by EATON

## STEP 5 – Select Back Box

### Back Boxes - for use with DS441 and DS442 covers or with 1 gang and 2 gang DS/DSD Series covers



| Dead End | Through Feed | Hub Size | Back Box Arrangement |
|---|---|---|---|
| **EDS171** | **EDSC171** | ½" | Single gang back box |
| **EDS271** | **EDSC271** | ¾" | Single gang back back box |
| **EDS371** | **EDSC371** | 1" | Single gang back box |
| **EDS172** | **EDSC172** | ½" | Double gang back box |
| **EDS272** | **EDSC272** | ¾" | Double gang back box |
| **EDS372** | **EDSC372** | 1" | Double gang back box |

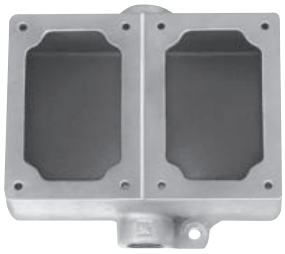

| Options: | Suffix |
|---|---|
| Aluminum body | **SA** |
| Exterior epoxy powder coat finish | **S752** |
| Interior & exterior epoxy powder coat finish | **S753** |

### Back Boxes – for use with DS443-SA cover or with 1½ gang DS511 (3-operator) Series covers

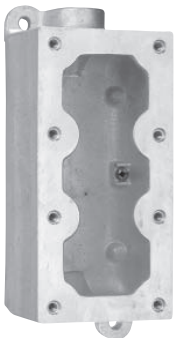

| Dead End | Through Feed | Hub Size | Back Box Arrangement |
|---|---|---|---|
| **EFD1491 SA** | **EFDC1491 SA** | ½" | 1½ gang back box |
| **EFD2491 SA** | **EFDC2491 SA** | ¾" | 1½ gang back box |
| **EFD3491 SA** | **EFDC3491 SA** | 1" | 1½ gang back box |

| Options | Suffix |
|---|---|
| Exterior epoxy powder coat finish | **S752** |
| Interior & exterior epoxy powder coat finish | **S753** |



Copyright© 2014 Eaton's Crouse-Hinds Business

# EDS / EFS Series Control Stations

## DSD Cover and Device Sub-assemblies

Cl. I. Div. 1 & 2, Groups B*, C, D† Explosionproof
Cl. II, Div. 1, Groups E, F, G Dust-Ignitionproof
Cl. II, Div. 2, Groups F, G Raintight
Cl. III Wet Locations
NEMA 3, 7B*CD, 9EFG

For use with EDSCM modular control device bodies see page 519 and EDS/EDSC back boxes.

## Features:

- Large machine screws for fastening covers to bodies
- Lockout hole for padlock having 1/4" hasp is provided when used with covers for front lever and side rocker type operation
- Lockout provisions on front operated pushbutton (marked "STOP" and "OFF") and all selector switch covers
- For covers with front lever and side rocker type operating handles, threaded type shafts and bushings are used to ensure flametightness
- Accurately ground flange for flametight joint when mated with ground flange on back box

## Certifications and Compliances:

(When used with EDSCM & EDS bodies):

- NEC/CEC:
  - Class I, Division 1 & 2, Groups C, D†
  - Class I, Division 2, Groups B, C, D
  - Class II, Division 1, Groups E, F, G
  - Class II, Division 2, Groups F, G
  - Class III
- NEMA/EEMAC: 3, 7B (Div. 2) CD, 9EFG
- UL Standards: 894, 698
- CSA Standard: C22.2 No. 30

Pushbuttons, Pilot Lights & Selector Switches (when used with EFS bodies):

- NEC/CEC:
  - Class I, Division 1 & 2, Groups B, C, D
  - Class II, Division 1, Groups E, F, G
  - Class II, Division 2, Groups F, G
  - Class III
- NEMA/EEMAC: 3, 7BCD, 9EFG
- UL Standard: 1203
- CSA Standard: C22.2 No. 30

## Standard Materials:

- Covers, front operated – Feraloy iron alloy and copper-free aluminum
- Covers, side operated – copper-free aluminum
- Shafts and shaft bushings – stainless steel
- Rocker handles, pushbuttons and guards – type 6 / 6 nylon
- Sealing enclosures – copper-free aluminum

CPS delayed action receptacle cover:

- Receptacle housing – copper-free aluminum
- Insulation – diallyl phthalate (DAP)
- Contacts – brass

## Standard Finishes:

- Feraloy – electrogalvanized and aluminum acrylic paint
- Copper-free aluminum – natural



## Options:

The following special options are available by adding suffix to Cat. #:

| Description | Suffix |
|---|---|
| • Lockout provision on front operated pushbutton cover (standard on buttons marked "STOP" and "OFF") | S153 |
| • Three-position selector switches with modified operation: Momentary contact clockwise operation, spring return to center, maintained contact counter-clockwise operation | S634 |
| Momentary contact counter-clockwise operation, spring return to center, maintained contact clockwise operation | S635 |
| • Momentary red emergency "STOP" button – front operated mushroom button, breaks normally closed contacts only (DL02 legend plate included – must specify legend text) | S111 |
| • Bodies and covers – copper-free aluminum | SA |
| • For 24 VDC operation on pilot lights | S300 |
| • Maintained red emergency "STOP" button with lockout – front operated mushroom button breaks normally closed and makes normally open contacts (push to stop), lockout standard (will not fit with a pilot light if transformer is required) | S769 |
| • Spring return to center from right and left (For DEV43 or DEV44 only) | S842 |
| • Key Operated – removable from all positions | S847 K1‡ |
| • Key Operated – removable from left position for DEV42 or from center for DEV43 and DEV44 | S847 K2‡ |
| • Key Operated – removable from right position for DEV42 or from left for DEV43 and DEV44 | S847 K3‡ |
| • Key Operated – removable from right position for DEV43 and DEV44 | S847 K4‡ |

## Ordering Information: Manual Motor Starters

| Poles | Max. H.P. | Max. Volts A.C. | Cat. # |
|---|---|---|---|
| **With Allen-Bradley Bulletin 600 Switches** | | | |
| 1 | 1 | 115–230 | **DSD910** ① |
| 2 | 1 | 115–230 | **DSD911** ① |
| **With General Electric Switches** | | | |
| 1 | 1 | 115–230 | **DSD912** ①§ |
| 2 | 1 | 115–230 | **DSD913** ①§ |
| **With Cutler-Hammer Switches** | | | |
| 1 | 1 | 115–230 | **DSD914** ①§ |
| 2 | 1 | 115–230 | **DSD915** ①§ |
| **With Arrow-Hart Switches Without Overload Protection** | | | |
| 2 | 5 | 250 (30A) | **DSD916** |
| 2 | 7.5 | 600 (30A) | **DSD916** |
| 3 | 7.5 | 250 (30A) | **DSD917** |
| 3 | 15 | 600 (20A) | **DSD917** |



† When a CPS receptacle cover device is used, the assembly meets requirements for Class I, Groups C and D areas only.

* For pushbuttons, pilot lights, & selector switches, use EFS back box with required external conduit seal for 1 inch hub size, within 5 feet for Class I, Division 1, Group B applications.

‡ Additional key lock housings available; please contact Customer Service.

§ A comparable factory sealed cover will fit on the EDSCM21 body, EDS and EDSC bodies and in bottom gang of EDSCM33 and EDSCM63 bodies. To order, add suffix S701 to catalog number.

① Includes one interchangeable heater. To select heater see pages 479–480. Symbol 0 (zero) may be used to indicate heater omitted.

 Copyright© 2016 Eaton

# EDS / EFS Series Control Stations

## DSD Cover and Device Sub-Assemblies

Cl. I. Div. 1 & 2, Groups B*, C, D†
Cl. II, Div. 1, Groups E, F, G
Cl. II, Div. 2, Groups F, G
Cl. III
NEMA 3, 7B*CD, 9EFG

Explosionproof
Dust-Ignitionproof
Raintight
Wet Locations


**DSD918**


**DSD922**


**DSD933**


**DSD962**


**DSD970**


**CPS152R**


**ENR5201**

For use with EDSCM modular control device bodies see page 519 & EFS/EDS back boxes.

## Ordering Information

### Front Operated Pushbutton Stations
**600 VAC Heavy Duty, Factory Sealed**

| Number of Cover Buttons | Normal Position | Diagram | Cat. # |
|---|---|---|---|
| 1 | 1 Circuit Universal | | **DSD918** ① |
| 1 | 2 Circuits Universal | | **DSD919** ① |
| | 2 Circuits | A B | **DSD920** ①■ |
| 2 | 2 Circuits Universal | | **DSD921** ① |
| 2 | 2 Circuits Start-Stop unless otherwise specified | A B | **DSD922** ①■ |
| 2 | 2 Circuits Universal Mushroom Head | | **DSD970** ① |
| 3 (2-operator) | 3 Circuits Universal | | **DSD962** ① |
| 3 (3-operator) | 3 Circuits Universal | | **DS511** ① **SA§** |
| 3 (3-operator) | 3 Circuits Universal Double pilot light - single pushbutton combo | | **DS513** ① **SA§** |
| 3 (3-operator) | 3 Circuits Universal Double pushbutton - single pilot light combo | | **DS514** ① **SA§** |

### Front Operated General Use Snap Switch

| Style | Amperes 120 VAC | 277 VAC | Cat. # |
|---|---|---|---|
| 1-Pole | 20 | 20 | **DSD933‡** |
| 2-Pole | 20 | 20 | **DSD934‡** |
| 3-Pole | ▲ | ▲ | **DSD935✪** |
| 3-Way | 20 | 20 | **DSD936‡** |
| 4-Way | 20 | 20 | **DSD937‡** |
| 1-Pole | 30 | 30 | **DSD939‡** |
| 2-Pole | 30 | 30 | **DSD940‡** |
| 3-Way | 30 | 30 | **DSD941‡** |

### Delayed Action Receptacles
**Factory Sealed**

| Rating | Cat. # |
|---|---|
| 20 A, 1 HP, 125–250 VAC 60 Hertz<br>20 A, 18 VDC | **CPS152R**<br>**(2 wire, 3 pole)** |
| 30 A, 1½ HP, 125–250 VAC 60 Hertz;<br>7 A, ½ HP, 480 VAC, 60 Hertz | **CPS532R**<br>**(2 wire, 3 pole)** |
| 30 A, 3 HP, 125–250 VAC 60 Hertz;<br>7A, 1 HP, 480 VAC, 60 Hertz | **CPS732R**<br>**(3 wire, 4 pole)** |

### General Purpose, Dead Front
**Factory Sealed**

| Rating | Cat. # | Diagram |
|---|---|---|
| 20 A, 125 VAC | **ENR5201** | 5-20R |
| 20 A, 250 VAC | **ENR6202** | 6-20R |

①If desired, markings on indicating plates may be added to catalog number. Select from the list of standard markings below:

| | | | |
|---|---|---|---|
| START | OFF | RESET | LIGHT ON |
| STOP | RUN | TRIP | HAND |
| ON | JOG | TEST | AUTOMATIC |
| EMERGENCY | OPEN | DOWN | RAISE |
| FORWARD | CLOSE | IN | LOWER |
| REVERSE | UP | OUT | |

* For pushbuttons, pilot lights, & selector switches, use EFS back box with required external conduit seal for 1 inch hub size, within 5 feet for Class I, Division 1, Group B applications.
† When a CPS receptacle cover device is used, the assembly meets requirements for Class I, Groups C and D areas only.
■ Two universal contact blocks, must be wired as two circuits with one normally open and one normally closed. 1 green button, 1 red button, and lockout provision provided as standard.
▲16 Amp., 125V.
10 Amp., 250V.
‡ To order a comparable factory sealed cover for EDS, EDSC, EDSCM21 and the bottom gang of EDSCM33 and EDSCM63 bodies, add suffix S697. Factory sealed for Class I, Division 2, Group B.
✪ Cannot be factory sealed.
§ Can only be used with EFD Series 1½ gang back boxes. Pushbuttons include contact blocks. Standard pushbutton color is black. For optional colors - red, green - write in color. Example: DS511 GREEN BLACK RED-SA. First color is for uppermost button. For optional legend markings write in marking after device operator color. Example: DS513-J3 JOG-J1 STOP GREEN-SA.

 Copyright© 2013 Eaton's Crouse-Hinds Business

Crouse-Hinds by EATON




DSD951



DSD925



DSD947-J1-J1



DSD958



DSD957



DSD961-J1

For use with EDSCM modular control device bodies see page 519 & EFS/EDS back boxes.

## Ordering Information
## Side Operated Pushbutton Station
### 600 VAC Heavy Duty, Factory Sealed

| Normal Position | Diagram | Cat. # |
|---|---|---|
| 1 Circuit Universal | | DSD949 ③ |
| 2 Circuits Universal | | DSD950 ③ |
| 2 Circuits<br>1 Open - A<br>1 Closed - B<br>Start-Stop unless otherwise specified | A B | DSD951 ③ |

## Selector Switches
### Maintained Contact 600 VAC Heavy Duty, Factory Sealed

| | Style | Position 1 | Position 2 | Position 3 | Cat. # |
|---|---|---|---|---|---|
| Two Position | Two Circuit | A1 A2 | | | DSD923 ④ |
| | Four Circuit | A1 A2 B1 B2 | | | DSD924 ④ |
| Three Position | Two Circuit | A1 A2 | | | DSD925 ④ |
| | | A1 A2 B1 B2 | | | DSD926 ④ |
| | Four Circuit | A1 A2 B1 B2 | | | DSD927 ④ |

* For pushbuttons, pilot lights, & selector switches, use EFS back box with required external conduit seal for 1 inch hub size, within 5 feet for Class I, Division 1, Group B applications.
‡LED pilot lights can be furnished in place of standard incandescent pilot lamps. Add suffix LED to Cat. No. after last color symbol.
§ Can only be used with EFD Series 1½ gang back boxes. Pushbuttons include contact blocks. Standard pushbutton color is black. For optional colors - red, green - write in color. Example: DS511 GREEN BLACK RED-SA. First color is for uppermost button. For optional legend markings write in marking after device operator color. Example: DS513-J3 JOG-J1 STOP GREEN-SA.

## Pilot Light Devices‡
### Factory Sealed

| Description | Diagram | Cat. # |
|---|---|---|
| With one pilot light | | DSD948 ① |
| With two pilot lights (Not available with a transformer) | | DSD947 ① |
| With one pilot light and transformer | | DSD948 ① ② |
| With one pilot light and pushbutton station | | DSD958 ① |
| With one pilot light and 1 double pushbutton station | | DSD961 ① |
| With one pilot light & transformer and 1 double pushbutton station | | ② |
| Triple pilot light | | A§ |
| Double pilot light - single pushbutton combo | | A§ |
| Double pushbutton - single pilot light combo | | DS514 ① SA§ |
| With one pilot light & 2 position selector switch, two circuit (pos. 1 - N.O., pos. 2 - N.C.) | A1 A2 | DSD973 ① ④ |
| With one pilot light & 2 position selector switch, four circuit (pos. 1 - N.O., pos. 2 - N.C. for both switches) | A1 A2 B1 B2 | DSD974 ① ④ |
| With one pilot light & 3 position selector switch, two circuit (pos. 1 - N.O., pos. 2 - open, pos. 3 - N.C.) | A1 A2 | DSD975 ① ④ |
| With one pilot light & 3 position selector switch, four circuit (pos. 1 - N.O., pos. 2 - open, pos. 3 - N.C. for both switches) | A1 A2 B1 B2 | DSD976 ① ④ |
| With one pilot light & 3 position selector switch, four circuit (pos. 1 - N.C., pos. 2 - N.O., pos. 3 - N.O. for switch A; pos. 1 - N.O., pos. 2 - N.O., pos. 3 - N.C. for switch B) | A1 A2 B1 B2 | DSD977 ① ④ |

Wire light to be lit when E-stop is activated

## Blank Cover

| Description | Cat. # |
|---|---|
| Blank Cover | DSD957 |

① Add color symbol for each pilot light from table below.

| Color | Symbol | Color | Symbol | Color | Symbol |
|---|---|---|---|---|---|
| Red | J1 | Amber | J6 | Blue | J11 |
| Green | J3 | Clear | J10 | | |

② Add suffix below for transformer primary voltage:

## Transformers – Voltages above 125

| Nom. Volts 50–60Hz Transformer | Primary Voltage Range | Suffix |
|---|---|---|
| 220 / 110 | 220–240 | T2 |
| 440 / 110 | 440–480 | T4 |
| 550 / 110 | 550–600 | T5 |

③ If desired, markings on indicating plates may be added to catalog number. Select from the list of standard markings below:

| | | | |
|---|---|---|---|
| START | OFF | RESET | LIGHT ON |
| STOP | RUN | TRIP | HAND |
| ON | JOG | TEST | AUTOMATIC |
| EMERGENCY | OPEN | DOWN | RAISE |
| FORWARD | CLOSE | IN | LOWER |
| REVERSE | UP | OUT | |

④ Specify indicating plate markings. Standard indicating plate markings available are as follows:

**Two-Position**

| | | |
|---|---|---|
| RUN, JOG | FAST, SLOW | IN, OUT |
| HAND, AUTOMATIC | OPEN, CLOSE | RAISE, LOWER |
| FORWARD, REVERSE | UP, DOWN | START, STOP |
| | ON, OFF | |

**Three-Position**

| | |
|---|---|
| JOG, OFF, RUN | 1, OFF, 2 |
| AUTOMATIC, OFF, HAND | OPEN, OFF, CLOSE |
| FORWARD, OFF, REVERSE | UP, OFF, DOWN |
| FAST, OFF, SLOW | |



Copyright© 2014 Eaton's Crouse-Hinds Business

## Emergency Stop Pushbutton Stations ❶❷

| Pushbutton Station | Description | Catalog Number | Price | Dimensions Length | Width | Depth |
|---|---|---|---|---|---|---|
|  | **Type 4/13 (IP66) - Oil & Dust Tight –** Gray aluminium | | | | | |
| | 30mm twist-to-release E-stop | **D7-1MPB13 -✪▼-◆** | **178.78** | | | |
| | 40mm twist-to-release E-stop | **D7-1MPB14 -✪▼-◆** | **183.88** | 3.28" | 3.34" | 4.93" |
| | 60mm twist-to-release E-stop | **D7-1MPB16 -✪▼-◆** | **188.48** | | | |
|  | **Type 4/13 (IP66) - Oil & Dust Tight –** Gray aluminium | | | | | |
| | 40mm twist-to-release keyed E-stop | **D7-1MPBK14-✪▼-◆** | **239.51** | 3.28" | 3.34" | 4.93" |
|  | **Type 4/4X/13 (IP66) - Dust Tight and Corrosion Proof –** Yellow plastic | | | | | |
| | 30mm twist-to-release E-stop | **D7-1YPB13-✪▼-◆** | **88.74** | | | |
| | 40mm twist-to-release E-stop | **D7-1YPB14-✪▼-◆** | **91.92** | 3.34" | 3.50" | 4.05" |
| | 60mm twist-to-release E-stop | **D7-1YPB16-✪▼-◆** | **98.44** | | | |
|  | **Type 4/4X/13 (IP66) - Dust Tight and Corrosion Proof –** Yellow plastic | | | | | |
| | 40mm twist-to-release keyed E-stop | **D7-1YPBK14-✪▼-◆** | **149.47** | 3.34" | 3.50" | 4.05" |

✪ = **P -** D7P Plastic devices, no price change

M - D7M Metal devices, add $1.92

▼ = See Base Mount Contact Block table

◆ = **ER -** Emergency Stop Ring (D7-15YE112), add $3.39




## Base Mount Contact Block Codes ❷

| ▼ Code | Contacts | Adder |
|---|---|---|
| X10 | 1NO | Std. |
| X01 | 1NC | Std. |
| X20 | 2NO | 12.90 |
| X02 | 2NC | 12.90 |
| X11 | 1NO/1NC | 12.90 |
| X30 | 3NO | 25.80 |
| X03 | 3NC | 25.80 |
| X21 | 2NO/1NC | 25.80 |
| X12 | 1NO/2NC | 25.80 |

## Enclosure Accessories

| Component | Catalog Number | Price Ea. | Pkg. Qty. |
|---|---|---|---|
| **Ground Screw Kit** This accessory is used for grounding on D7 plastic enclosures only. | **D7-AGS2** | **.84** | **10** |

### *Ordering Example*

| | |
|---|---|
| • Specify Catalog Number | |
| • Replace (▼) with Contact Block Code and Operator Type | **See Contact Block Code table on this page** |
| • Include price adder when applicable | |

❶ Will accept one stack of base mount contact blocks (1-3 contact blocks).
❷ Accepts two piece snap-in legends and 60 mm emergency stop legends.

3x units:
FQIT-02-152
FQIT-02-156
FQIT-02-172

REVIEWED BY CONTRACTOR
Kudlik Construction Ltd.
NAME: Sandra Rousseau P.Eng
DATE: Mar 28, 2019

NORCLAIR
MÉCANIQUE DE PROCÉDÉ

# SHOP DRAWINGS

**DA-IC-12R1 Thermal mass flowmeter**

**Date :** 2019-03-28

| **Information general** | |
|---|---|
| Project : **WWTP UPGRADE - IQALUIT** | |
| Client : Kudlik Construction Ltd.<br>To : Sandra Rousseau P.Eng., Project Manager | Project number : **2018-062**<br>E-mail : srousseau@kudlik.biz |
| Contractor : **Norclair inc.** | Project number Norclair : **P1039** |
| Address : 1100, Mountain Masson, Laval, QC, Canada H7E 4P2 | |
| Project Manager : Hugo Chartier, Project Manager | E-mail: hchartier@norclair.ca |
| Phone : 450-688-4012 # 706 | Cell. : 514-703-0263 |

| **Information, subcontractor or supplier** | |
|---|---|
| Sub/supplier : **Endress & Hauder** | |
| Contact : **Stéphane Raymond** | Phone : **514-940-2288** |

| **Information on the equipment** | |
|---|---|
| Speciality : **Instrumentation and Control** | |
| Equipment : **Thermal Mass Flowmeter** | |
| Drawing reference : | |
| Specification reference : **47 30 02 data sheets** | Division : |
| Article : | Number of pages : **10** |

New review needed. See page 5 and following.
HC, 2019-03-28

CONSULTANT APPROVAL
SHOP DRAWINGS ARE REVIEWED UNLESS NOTED OTHERWISE

| | |
|---|---|
| REVIEWED AS MODIFIED | X |
| REVISE & RESUBMIT | |
| SEAL & SIGNATURE REQUIRED | |

Stantec

DATE April 23

SIGNATURE

REVIEW BY STANTEC IS FOR THE SOLE PURPOSE OF ASCERTAINING GENERAL CONFORMITY WITH DESIGN. CONTRACTOR IS RESPONSIBLE FOR DIMENSIONS, FABRICATION AND CONSTRUCTION METHODS, COORDINATION OF SUB-TRADES, DETAIL DESIGN OF COMPONENTS, AND ERRORS OR OMISSIONS ON SHOP DRAWINGS.

STANTEC PROJECT #: 110126045
SUBMITTAL # DA-IC-12 (2019-01-24)

This review by Stantec is for general conformance with the design concept of Stantec's design of the:
☐ Architectural ☐ Structural ☐ Mechanical ☐ Electrical ☑ Other

component(s) only and does not mean that Stantec has verified or approves the shop drawing(s). The Contractor remains solely responsible for the shop drawing(s) and this review by Stantec does not relieve the Contractor of the Contractor's responsibility for errors or omissions in the shop drawing(s) or for meeting all requirements of the contract documents. This review does not mean that Stantec approves the detailed design inherent in the shop drawing, responsibility for which shall remain with the Contractor submitting same, nor does this review mean that Stantec accepts any deviation of the shop drawing(s) from the contract documents. The Contractor is responsible for confirming all dimensions and correlating them at the job site, for all construction means, methods and techniques, and for coordination of construction work of all trades, including coordination of all shop drawings.

Stantec

☐ REVIEWED
☑ REVIEWED, AS NOTED
☐ REVISE AND RESUBMIT
☐ NOT REVIEWED

DATE 2018-JAN-28
BY David Hutchison, P.Eng.

1100, montée Masson
Laval, QC, Canada
H7E 4P2

Phone. : 450-688-4012
Fax : 450-661-6341
E-Mail : info@norclair.ca
www.norclair.ca

**Endress+Hauser**
People for Process Automation

| DRAWING NUMBER | 2002597302 | PROJECT | Iqaluit |
|---|---|---|---|
| | | | Norclair Inc. |

65I-20AA0AD5RABABA
**t-mass 65I**

Link to the product information:
www.ca.endress.com/65I

Thermal mass flowmeter for gases. Insertion type for circular pipes and rectangular ducts.

**additional specifications**

| | | |
|---|---|---|
| Language | English | |
| Process pressure | 14.69200 | psi a |
| Pipe type | Circular | |
| Internal diameter | 6.998 | Inch |
| Channel 1 | | |
| Gas type 1 | Air | |
| Mol-% gas 1 | 100.000 | % |
| Assign line 1 | Mass flow | |
| Assign line 2 | Totalizer 1 | |
| Assign totalizer 1 | Mass flow | |
| Unit totalizer 1 | | lb |
| Assign totalizer 2 | Mass flow | |
| Unit totalizer 2 | | lb |
| Assign current output | Mass flow | |
| Current span | 4-20 mA HART US | |
| Value 20 mA | 16,500.000 | lb/h |
| Time constant | 1.000 | s |
| Failsafe mode current output | Min. current | |
| Assign pulse output | Mass flow | |
| Pulse value | 200.000 | lb |
| Pulse width | 20.000 | ms |
| Output signal | Passive - positive | |
| Failsafe mode pulse output | Fallback value | |

1x TAG-stainless steel label 50061469
FQIT-02-152
FQIT-02-156
FQIT-02-172

| | |
|---|---|
| 20 | Insertion Tube Length: 235 mm 9" |
| A | Material Insertion Tube; Sensor: Stainl. steel; Stainl. steel |
| A | Process Connection: 1" MNPT, thread ANSI, compression fitting, Stainl. steel |
| 0 | Seal: PEEK, -40...+130oC/-40...+266oF |
| A | Surface cleaning: Basic version |
| D | Calibration: Factory calibration |
| 5 | Additional Test, certificate: CRN approval |
| R | Approval: FM NI Cl.I Div.2/CSA Cl.I Div.2, ABCD + Zone 2 |
| A | Housing: Compact Alu, IP67 NEMA4X |
| B | Cable Entry: Thread NPT 1/2 |
| A | Display; Operation: 85-260VAC, 2-line + push buttons |
| B | Adjustment; Software Feature: Default Gas (Air 1.013bar a/14.692psi a) |
| A | Output, Input: 4-20mA HART + frequency |
| 1 | >>>Marking: Tagging (TAG), see additional spec. |

| | Initiales | ISSUED DATE |
|---|---|---|
| | SR | December 18 2018 |
| | | |
| | | |
| | | |

**1100 Montee Masson**
**Laval, Qc**
**H7E 4P2**

**Hugo Chartier**

Téléphone: **450-688-4012**
FAX **450-688-9123**
EMAIL hchartier@norclair.ca

SUPPL
anada Ltée
6800 Côte de liesse, suite 100
Québec, Canada
H4T 2A7

Téléph 254 X2288
FAX 514 733-2924
EMAIL stephane.raymond@endress.com

| ISSUED BY | Stephane Raymond |
|---|---|
| ISSUE | OR |
| AS IS: | X |
| Équivalent: | Information: |
| Substitution: | Coordination: |

ENGINEER APPROUVAL STAMP

Volume
Nm3
kg
2000 Nm3/h
1 Nm3
100ms on / 100ms off
(200ms @ 50% duty)

Endress+Hauser
People for Process Automation

| DRAWWING NUMBER | 2002597302 | PROJECT | Iqaluit |
|---|---|---|---|

MECANICAL CONSTRUCTION

*t-mass 65I: Compact insertion version*

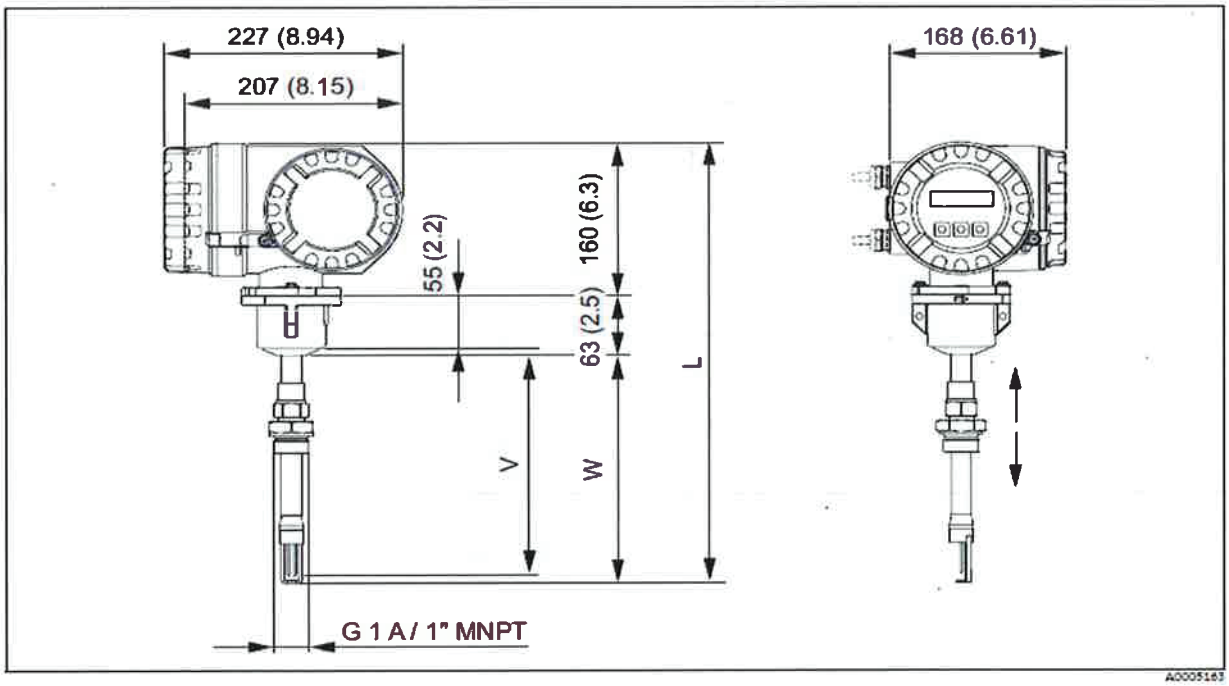


*Engineering unit mm (in)*

| Length tmass 65I | V | W | L | $L_R$ |
|---|---|---|---|---|
| 235 | 235.1 | 252.6 | 475.6 | 417.6 |

Endress+Hauser
People for Process Automation

| DRAWWING NUMBER | 2002597302 | PROJECT | Iqaluit |
|---|---|---|---|

ELECTRICAL CONNECTIONS

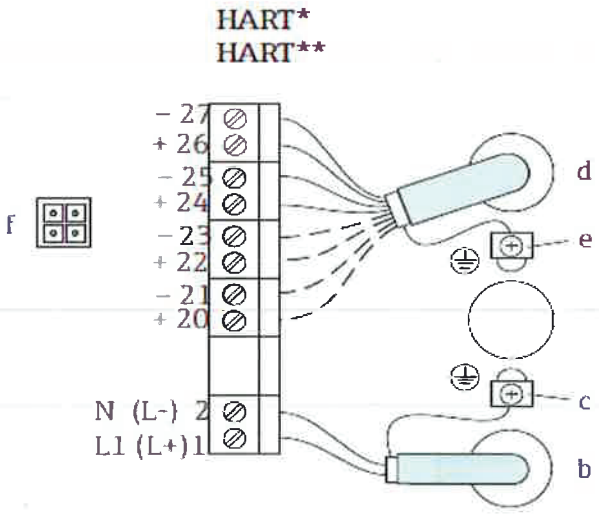


*Connecting the transmitter, cable cross-section max. 2.5 mm² (14 AWG)*

*A* View A (field housing)
*B* View C (wall-mount housing)

**)* fixed communication board
***)* flexible communication board
*a* Connection compartment cover
*b* Cable for power supply: 85 to 260 V AC, 20 to 55 V AC, 16 to 62 V DC
Terminal No. 1: L1 for AC, L+ for DC
Terminal No. 2: N for AC, L- for DC
*c* Ground terminal for protective ground
*d* Signal cable: see Terminal assignment → ` 11
Fieldbus cable:
Terminal No. 26: DP (B) / PA (+) / FF (+) / MODBUS RS485 (B) / (PA, FF: with reverse polarity protection)
Terminal No. 27: DP (A) / PA (–) / FF (–) / MODBUS RS485 (A) / (PA, FF: with reverse polarity protection)
*e* Ground terminal for signal cable shield / fieldbus cable / RS485 line
*f* Service adapter for connecting service interface FXA 193 (Fieldcheck, FieldCare)
*g* Signal cable: see Terminal assignment → ` 11
Cable for external termination (only for PROFIBUS DP with permanent assignment communication board):
Terminal No. 24: +5 V
Terminal No. 25: DGND

# Applicator Sizing - Flow

## Project :

Customer:
Contact person:
Phone:
eMail:
C.Project No.:
Fax:

## TAG : ---

Timestamp: ---
Review number: ---
Sales order number:

## Sizing Sheet

### General Parameters

| | | | |
|---|---|---|---|
| Fluid | Air (Gas) ✓ | Ref. Temperature | 0 °C |
| State | Gas | Ref. Pressure | 1.013 bar_a |
| Character | Clean | Atmospheric Pressure | 1.0133 bar_a |
| Abrasivity | Not abrasive | Standard | ASME (ANSI) |
| Fluid Group (PED) | Normal Fluid (Fluid group 2) | | |
| Fluid type | Newtonian | | |

### Operating Conditions

| | minimum | nominal | maximum 100 | |
|---|---|---|---|---|
| Requested Flow | 1.6 | 13.1 | 50 | m3/min |
| Pressure | 22 | 22 | 22 | psi_g |
| Temperature | 60 | 60 | 60 | °C |
| Density | 2.6455 | 2.6455 | 2.6455 | kg/m3 |
| Z-factor | 1 | 1 | 1 | |
| Viscosity | 0.02021 | 0.02021 | 0.02021 | cP |
| Design pressure (min/max) | 22 | | 22 | psi_g |
| Design Temp. (min/max) | 60 | | 60 | °C |

### Flowmeter : t-mass 65I

Generation: 2 Device model: 0

| | |
|---|---|
| Flow Principle | Thermal (t-mass) |
| Operating range min. | 0.478 m3/min |
| Calibrated Flow | 47.839 m3/min ✓ |
| Operating range max. | 95.679 m3/min ✓ |
| Material (sensor) * | SS 1.4404 / 316L |
| Process connection* | Cl 150 1" MNPT ASME, 1.4404/316L Compr. fitting |
| PED category ** : | In observance of the selected process conditions and medium, Applicator categorizes this application as PED Art.4.3. Applicator doesn't suggest an instrument with PED option. The sensor's volume under pressure is smaller than the limiting value. |

### Extended Order Code

| Qty | Item | Description | Extended Order Code |
|---|---|---|---|
| 1 | Flowmeter | t-mass 65I | 65I-20AA (full model # on previous page) |
| 1 | Accessory | Customer connection C1 | ensure C2 connection is also ordered |

*The user is responsible for the selection of process-wetted materials in view of their corrosion resistance. Endress+Hauser makes no guarantees and assumes no liability for the corrosion resistance of the materials selected here for the application described above.

** The PED category is an Endress+Hauser recommendation and depends on the fluid category, process data as well from the max. permissible pressure of the selected pressure rating. The fluids of the Applicator data base are classified to 67/548/EWG.



Under no circumstances is Endress+Hauser liable for errors, neither in the Software and in its documentation, nor for any errors and consequential damage which may arise out of their use. The results in Applicator apply to parameters entered by the user. A change in these parameters could lead to different results. Mandatory data are in the according technical information (TI).

Endress+Hauser
People for Process Automation

# Applicator Sizing - Flow

## Project :

Customer:
Contact person:
Phone:
eMail:
C.Project No.:
Fax:

## TAG : ---

Timestamp: —
Review number: ---
Sales order number:

## Sizing Sheet

### Sizing and Calculated Results

| | minimum | nominal | maximum 100 | |
|---|---|---|---|---|
| Requested Flow | 1.6 | 13.1 | 50 | m3/min |
| Velocity | 1.302 | 10.66 | 40.7 | m/s |
| Pressure loss | 0 | 0 | 0.01 | psi |
| Measurement error Mass*** | 4.48 | 1.5 | 1.82 | % |
| Reynolds No. | 27 520 | 225 321 | 860 004 | |

***For error calculation, the specified reference conditions for the calibration of the flowmeter according to ISO/IEC 17025 apply. Further information in technical documentation.

### Warning(s)

### Notice(s)

### Message(s)

1. Note: For t-mass it is recommended to select "Corrected volume units e.g. Nm3/h or mass units.



Under no circumstances is Endress+Hauser liable for errors, neither in the Software and in its documentation, nor for any errors and consequential damage which may arise out of their use. The results in Applicator apply to parameters entered by the user. A change in these parameters could lead to different results. Mandatory data are in the according technical information (TI).

Endress+Hauser
People for Process Automation

# Applicator Sizing - Flow

## Project :

Customer:
Contact person:
Phone:
eMail:
C.Project No.:
Fax:

## TAG : ---

Timestamp: ---
Review number: ---
Sales order number:

## Fluid properties sheet

### Fluid

| | | | |
|---|---|---|---|
| Fluid name | Air (Gas) | State | Gas |
| Chemical formula | | Calculation standard | NEL |

### Fluid description

| | |
|---|---|
| Medium character | Clean |
| Fluid group (PED) | Normal Fluid (Fluid group 2) |
| Fluid type | Newtonian |
| Fluid stability | Stable |

| Gas mixture Component | Fraction | |
|---|---|---|
| 1 Air (Gas) | 100 Mole% | 100 Mass% |
| 2 | 0 Mole% | 0 Mass% |
| 3 | 0 Mole% | 0 Mass% |
| 4 | 0 Mole% | 0 Mass% |
| 5 | 0 Mole% | 0 Mass% |
| 6 | 0 Mole% | 0 Mass% |
| 7 | 0 Mole% | 0 Mass% |
| 8 | 0 Mole% | 0 Mass% |

### Basic fluid parameters

| | | | |
|---|---|---|---|
| Tc (Critical temperature) | -140.6 °C | Tm (Melting point) | -209.7 °C |
| Pc (Critical pressure) | 546.648 psi | Tb (Boiling point) | -195.8 °C |
| Rho_c (Critical density) | 324 kg/m3 | | |

### Calculated results

| | | | |
|---|---|---|---|
| Density nom. | 2.6455 kg/m3 | Pressure nom. | 22 psi_g |
| Molar mass | 28.964 kg/kmol | Temperature nom. | 60 °C |
| Z-factor nom. | 1 | | |
| Viscosity nom. | 0.02021 cP | | |
| Sound velocity nom. | 365.6 m/s | | |
| Thermal capacity nom. | 1.009 kJ/(kg*K) | | |
| Heat conductivity nom. | 0.029 W/(m K) | | |
| Rel. humidity nom. | % | | |

### Reference values: Normal conditions (SI):

| | |
|---|---|
| Atmospheric pressure | 1.0133 bar_a |
| Density normal | 1.2929 kg/m3 |
| Temperature (Normal conditions SI) | 0 °C |
| Pressure (Normal conditions SI) | 1.0133 bar_a |

### Standard conditions (US):

| | |
|---|---|
| Atmospheric pressure | 1.0133 bar_a |
| Density standard | 1.2254 kg/m3 |
| Temperature (Standard conditions US) | 59 °F |
| Pressure (Standard conditions US) | 14.696 psi_a |



Under no circumstances is Endress+Hauser liable for errors, neither in the Software and in its documentation, nor for any errors and consequential damage which may arise out of their use. The results in Applicator apply to parameters entered by the user. A change in these parameters could lead to different results. Mandatory data are in the according technical information (TI).

Endress+Hauser
People for Process Automation

# Applicator Sizing - Flow

## Project :

Customer:
Contact person:
Phone:
eMail:
C.Project No.:
Fax:

## TAG : ---

Timestamp: ---
Review number: ---
Sales order number:

## Installation sheet

### Flowmeter / Accessories

#### Extended Order Code

| Qty | Item | Description | Extended Order Code |
|---|---|---|---|
| 1 | Flowmeter | t-mass 65I | 65I-20AA |
| 1 | Accessory | Customer connection C1 | |

### Installation data :

| | |
|---|---|
| Insertion depth X | 225.844 mm |
| Insertion tube length | 235 mm |
| Pipe inner diameter 20°C | 6.357 inch |
| Wall thickness | 0.134 inch |
| C1 = Height process connection | 120 mm |
| C2 = Height sensor connection | 52 mm |
| C = Total height of connection | 172 mm |

### Pipe data

| | |
|---|---|
| Pipe standard | ASME (ASME B36.10 / B36.19) |
| Pipe size | 6" |
| Prefered dimension for PN | sched. 10 / 10S |

A= Internal diameter or internal height (duct vertical installation) or internal width (duct horizontal installation)
B= Wall thickness
C= Height of connection

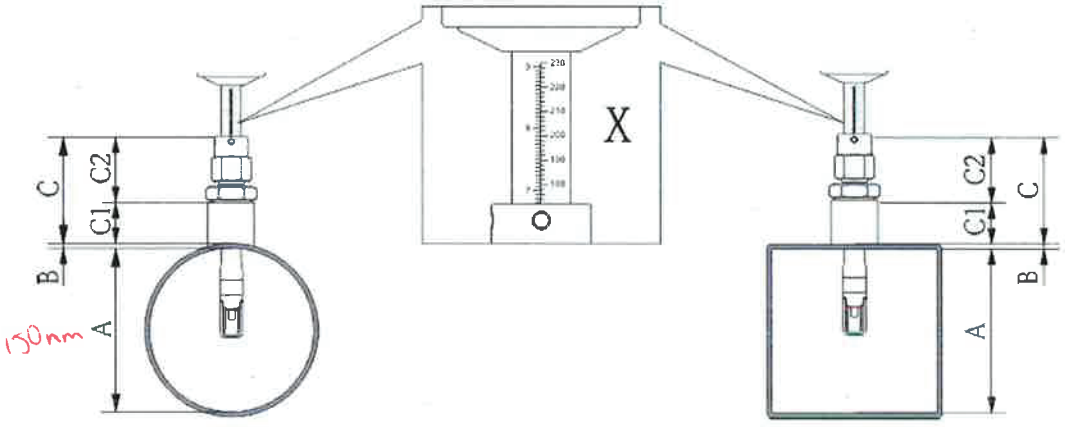


*The Enduser is responsible for the correct selection of the piping. Applicator does not calculate necessary pipe wall thickness according to application data. Endress + Hauser takes no liability for the suitability of the pipe dimensions.

### Warning(s)

### Notice(s)

### Message(s)

1. Note: For t-mass it is recommended to select "Corrected volume units e.g. Nm3/h or mass units.




Under no circumstances is Endress+Hauser liable for errors, neither in the Software and in its documentation, nor for any errors and consequential damage which may arise out of their use. The results in Applicator apply to parameters entered by the user. A change in these parameters could lead to different results. Mandatory data are in the according technical information (TI).

Endress+Hauser
People for Process Automation

# Applicator Sizing - Flow

## Project :

Customer:
Contact person:

Phone:
eMail:

C.Project No.:
Fax:

## TAG : ---

Timestamp: ---
Sales order number:

Review number: ---

## Chart Sheet

### Flowmeter: t-mass 65I

Generation: 2

| | |
|---|---|
| Flow Principle | Thermal (t-mass) |
| Operating range min. | 0.478 m3/min |
| Calibrated Flow | 47.839 m3/min |
| Operating range max. | 95.679 m3/min |

Device model: 0

| | |
|---|---|
| Fluid | Air (Gas) |
| Temperature | 60 °C |
| Density | 2.6455 kg/m3 |
| Viscosity | 0.02021 cP |

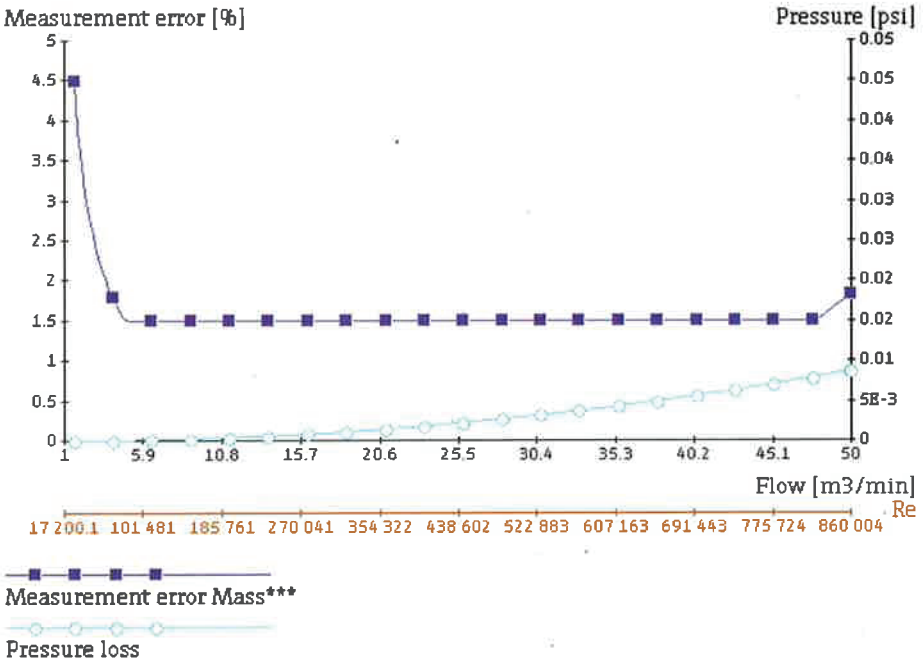


| Flow rate (m3/min) | Pressure loss (psi) | Measurement error Mass(%)*** |
|---|---|---|
| 1.6 | 0 | 4.485 |
| 6.44 | 0 | 1.5 |
| 11.28 | 0 | 1.5 |
| 16.12 | 0.001 | 1.5 |
| 20.96 | 0.001 | 1.5 |
| 25.8 | 0.002 | 1.5 |
| 30.64 | 0.003 | 1.5 |
| 35.48 | 0.004 | 1.5 |
| 40.32 | 0.006 | 1.5 |
| 45.16 | 0.007 | 1.5 |
| 50 | 0.009 | 1.816 |

***For error calculation, the specified reference conditions for the calibration of the flowmeter according to ISO/IEC 17025 apply. Further information in technical documentation.




Under no circumstances is Endress+Hauser liable for errors, neither in the Software and in its documentation, nor for any errors and consequential damage which may arise out of their use. The results in Applicator apply to parameters entered by the user. A change in these parameters could lead to different results. Mandatory data are in the according technical information (TI).

Endress+Hauser
People for Process Automation

Under no circumstances is Endress+Hauser liable for errors, neither in the Software and in its documentation, nor for any errors and consequential damage which may arise out of their use. The results in Applicator apply to parameters entered by the user. A change in these parameters could lead to different results. Mandatory data are in the according technical information (TI).

Endress+Hauser
People for Process Automation

2x units:
LIT-03-111
LIT-03-121

REVIEWED BY CONTRACTOR
Kudlik Construction Ltd.
NAME: Sandra Rousseau P.Eng
DATE: Jan 28, 2019

NORCLAIR
MÉCANIQUE DE PROCÉDÉ

# SHOP DRAWINGS

**DA-IC-13 Ultrasonic level sensor (non-XP)**

**Date :** 2019-01-24

| **Information general** | |
|---|---|
| Project : **WWTP UPGRADE - IQALUIT** | |
| Client : Kudlik Construction Ltd.<br>To : Sandra Rousseau P.Eng., Project Manager | Project number : **2018-062**<br>E-mail : srousseau@kudlik.biz |
| Contractor : **Norclair inc.** | Project number Norclair : **P1039** |
| Address : 1100, Mountain Masson, Laval, QC, Canada H7E 4P2 | |
| Project Manager : Hugo Chartier, Project Manager | E-mail: hchartier@norclair.ca |
| Phone : 450-688-4012 # 706 | Cell. : 514-703-0263 |

| **Information, subcontractor or supplier** | |
|---|---|
| Sub/supplier : Endress & Hauder | |
| Contact : Stéphane Raymond | Phone : 514-940-2288 |

| **Information on the equipment** | |
|---|---|
| Speciality : **Instrumentation and Control** | |
| Equipment : Ultrasonic level sensor (non-XP) | |
| Drawing reference : | |
| Specification reference : 47 30 02 data sheets | Division : |
| Article : | Number of pages : 7 |

**CONSULTANT APPROVAL**

Comments within

STANTEC PROJECT #: 110126045

SUBMITTAL # DA-IC-13 (2019-01-24)

This review by Stantec is for general conformance with the design concept of Stantec's design of the:

☐ Architectural ☐ Electrical
☐ Structural ☑ Other Instrumentation
☐ Mechanical

component(s) only and does not mean that Stantec has verified or approves the shop drawing(s). The Contractor remains solely responsible for the shop drawing(s) and this review by Stantec does not relieve the Contractor of the Contractor's responsibility for errors or omissions in the shop drawing(s) or for meeting all requirements of the contract documents. This review does not mean that Stantec approves the detailed design inherent in the shop drawing, responsibility for which shall remain with the Contractor submitting same, nor does this review mean that Stantec accepts any deviation of the shop drawing(s) from the contract documents. The Contractor is responsible for confirming all dimensions and correlating them at the job site, for all construction means, methods and techniques, and for coordination of construction work of all trades, including coordination of all shop drawings.

Stantec

☐ REVIEWED
☑ REVIEWED, AS NOTED
☐ REVISE AND RESUBMIT
☐ NOT REVIEWED

DATE 2018-JAN-28

BY David Hutchison, P.Eng.

1100, montée Masson
Laval, QC, Canada
H7E 4P2

Phone. : 450-688-4012
Fax : 450-661-6341
E-Mail : info@norclair.ca
www.norclair.ca

Endress+Hauser
People for Process Automation

| DRAWING NUMBER | 2002597302 | PROJECT | Iqaluit |
|---|---|---|---|
| | | | Norclair Inc. |

FDU91-SN6AA
**Prosonic S FDU91**

Link to the product information:
www.ca.endress.com/FDU91

Level, ultrasonic, contactless.
Sensor for connection to FMU90/FMU95.
Application: liquids, solids.
Sensor: PVDF.
Measuring range: 10m/32ft (liquid), 5m/16ft (solid).
Max -40...80oC/176oF.
Max 4bar/60psi abs.
Blocking distance: 30cm/1ft.
:: High availability:
Self cleaning effect of sensor membrane.

| | |
|---|---|
| S | Approval: CSA Cl.I,II,III Div.1+2 Gr.A-G, zone 1,2 |
| N | Process Connection: Thread ANSI NPT1, PVDF |
| 6 | Cable Length: 30m/98ft |
| A | Heater: W/o |
| A | Additional Option: Basic version |

Contractor responsible for confirming length is sufficient


**1100 Montee Masson**
**Laval, Qc**
**H7E 4P2**

**Hugo Chartier**

Téléphone: **450-688-4012**
FAX **450-688-9123**
EMAIL hchartier@norclair.ca


SUPPLIER

Endress+hauser Canada Ltée
6800 Côte de liesse, suite 100
Ville Saint-Laurent, Québec, Canada
H4T 2A7

Téléphone: 514 733-0254 X2288

| ISSUED BY | Stéphane Raymond |
|---|---|

| ISSUED PRODUCT | | DRAW.ISSUED FOR | |
|---|---|---|---|
| AS IS: | X | APPROUVAL: | X |
| Équivalent: | | Information: | |
| Substitution: | | Coordination: | |

ENGINEER APPROUVAL STAMP

| | Initiales | ISSUED DATE |
|---|---|---|
| | SR | December 18 2018 |
| | | |
| | | |
| | | |

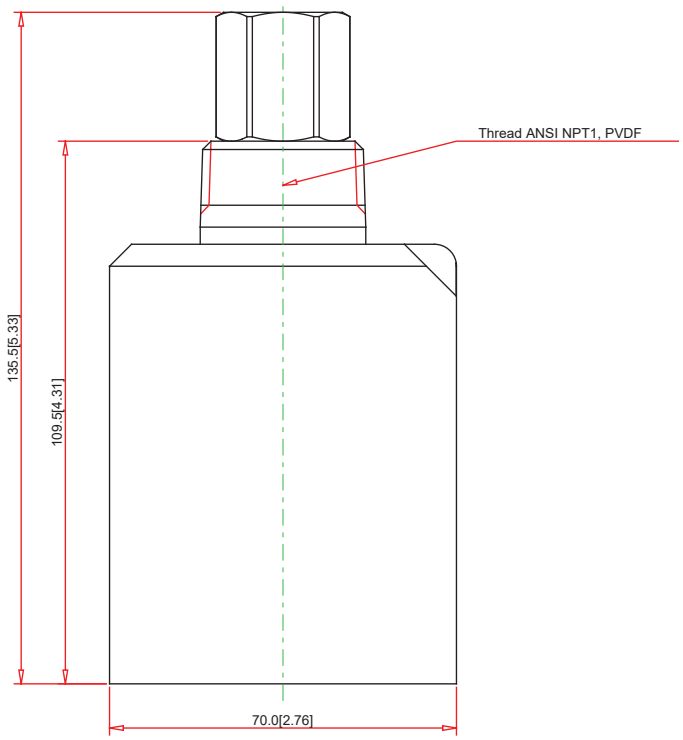


First Angle Projection

## Disclaimer:

To ensure the accuracy of the information contained in this document every reasonable effort has been made. Endress+Hauser may not make any warranties,express or implied, with respect to the accuracy, the completeness or the technical or commercial usefulness of this document. Endress+Hauser may modify or replace this document any time.

© 18.12.2018 Endress+Hauser

Order Code :
FDU91-SN6AA

Product Description :
Prosonic S FDU91

www.addresses.endress.com

Endress+Hauser

People for Process Automation

Endress+Hauser
People for Process Automation

| DRAWWING NUMBER | 2002597302 | PROJECT | Iqaluit |
|---|---|---|---|

ELECTRICAL CONNECTIONS

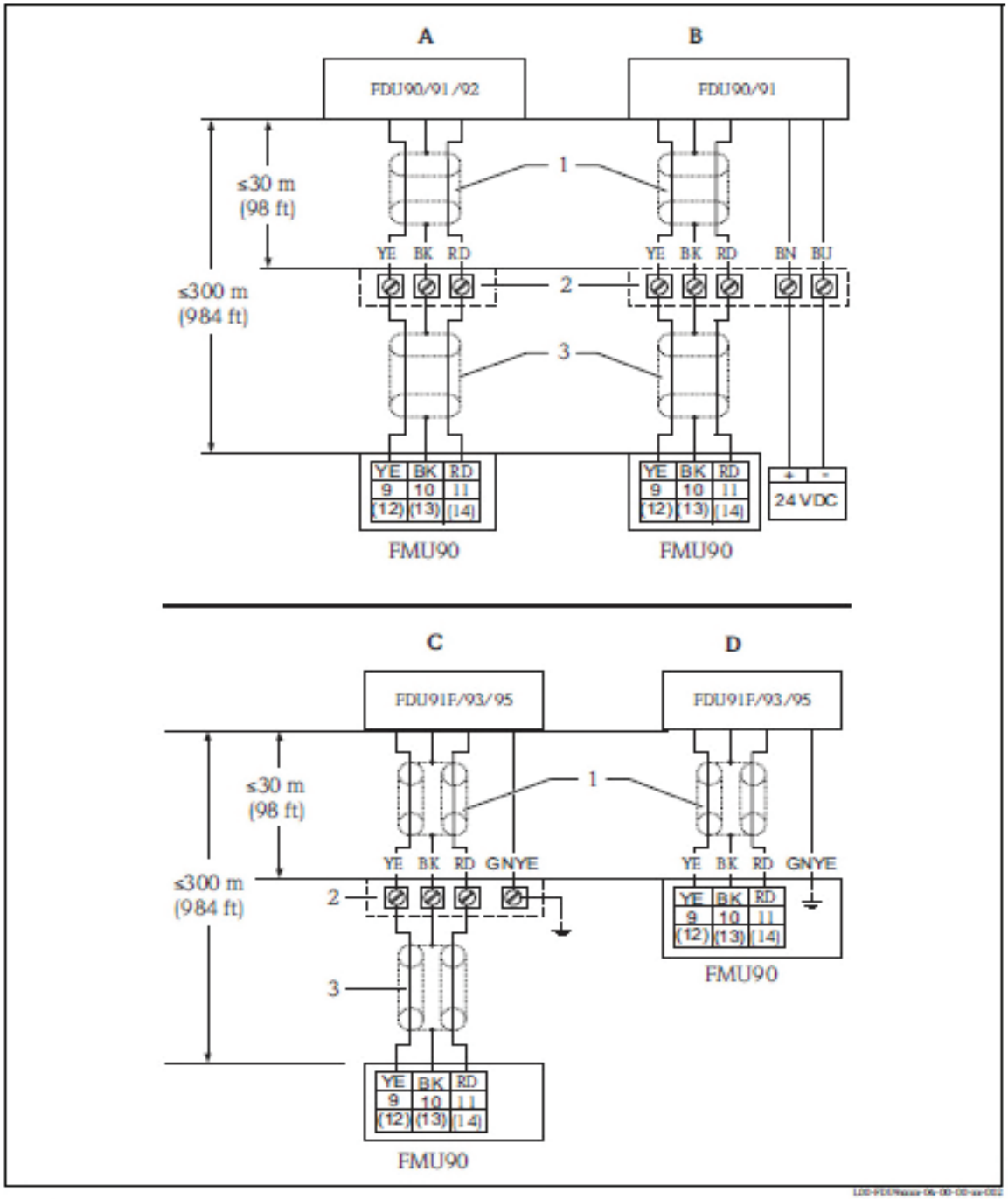


*A Without sensor heater*
*B With sensor heater*
*C Grounding at the terminal box*
*D Grounding at the transmitter FMU90*

*1 Shield of the sensor cable*
*2 Terminal box*
*3 Shield of the extension cable*

*Colours of the strands: YE = yellow; BK = black; RD = red; BU = blue; BN = brown; GNYE = green-yellow*

Endress+Hauser
People for Process Automation

| DRAWING NUMBER | 2002597302 | PROJECT | Iqaluit |
|---|---|---|---|
| | | | Norclair Inc. |

FMU90-N11CA111AA1A
**Prosonic S FMU90**

Link to the product information:
www.ca.endress.com/FMU90

Evaluation: level/flow,
Continuous + switch output.
Application: up to 2 sensors,
Ex/non Ex: FDU90/FDU91/FDU91F/FDU92/
FDU93/FDU95.
32 points linearization.
Incl. Setup-/diagnostic software.
:: Simple guided setup:
automatic sensor recognition FDU9x,
menu-guided clear text commissioning.

| | |
|---|---|
| N | Approval: CSA General Purpose |
| 1 | Application: Level + pump control, alternating |
| 1 | Housing, Material: Field mounting PC, IP66 NEMA4x |
| C | Operation: Illuminated display + keypad |
| A | Power Supply: 90-253VAC |
| 1 | Level Input: 1x sensor FDU9x/8x |
| 1 | Switch Output: 1x relay, SPDT |
| 1 | Output: 1x 0/4-20mA HART |
| A | Additional Input: W/o |
| A | Datalog Function: Basic version |
| 1 | Language: DE, EN, NL, FR, ES, IT, PT |
| A | Additional Option: Basic version |

Loss of Echo

| | Initiales | ISSUED DATE |
|---|---|---|
| | **SR** | **December 18 2018** |
| | | |
| | | |
| | | |

**1100 Montee Masson**
**Laval, Qc**
**H7E 4P2**

**Hugo Chartier**

Téléphone: **450-688-4012**
FAX **450-688-9123**
EMAIL hchartier@norclair.ca

SUPPLIER

Endress+hauser Canada Ltée
6800 Côte de liesse, suite 100
Ville Saint-Laurent, Québec, Canada
H4T 2A7

Téléphone: 514 733-0254 X2288
FAX 514 733-2924
EMAIL stephane.raymond@endress.com

ISSUED BY **Stéphane Raymond**

| ISSUED PRODUCT | | DRAW.ISSUED FOR | |
|---|---|---|---|
| AS IS: | **X** | APPROUVAL: | **X** |
| Équivalent: | | Information: | |
| Substitution: | | Coordination: | |

ENGINEER APPROUVAL STAMP

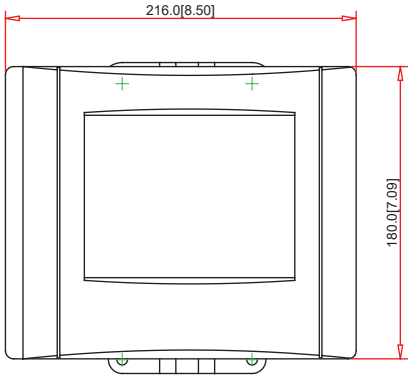


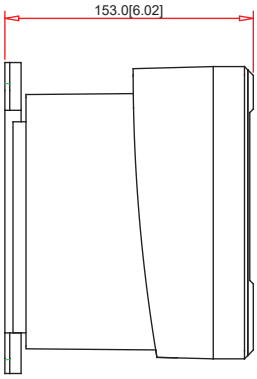


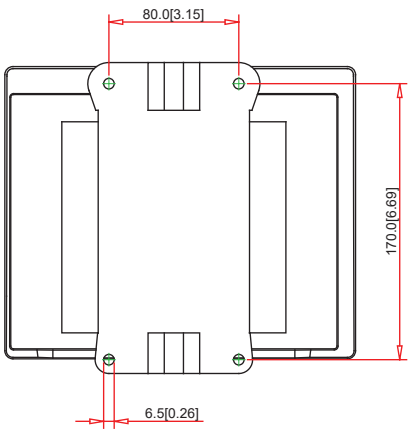


First Angle Projection

## Disclaimer:

To ensure the accuracy of the information contained in this document every reasonable effort has been made. Endress+Hauser may not make any warranties,express or implied, with respect to the accuracy, the completeness or the technical or commercial usefulness of this document. Endress+Hauser may modify or replace this document any time.

© 18.12.2018 Endress+Hauser

Order Code :
FMU90-N11CA111AA1A

Product Description :
Prosonic S FMU90

www.addresses.endress.com

Endress+Hauser

People for Process Automation

Endress+Hauser
People for Process Automation

| DRAWWING NUMBER | 2002597302 | PROJECT | Iqaluit |
|---|---|---|---|

ELECTRICAL CONNECTIONS

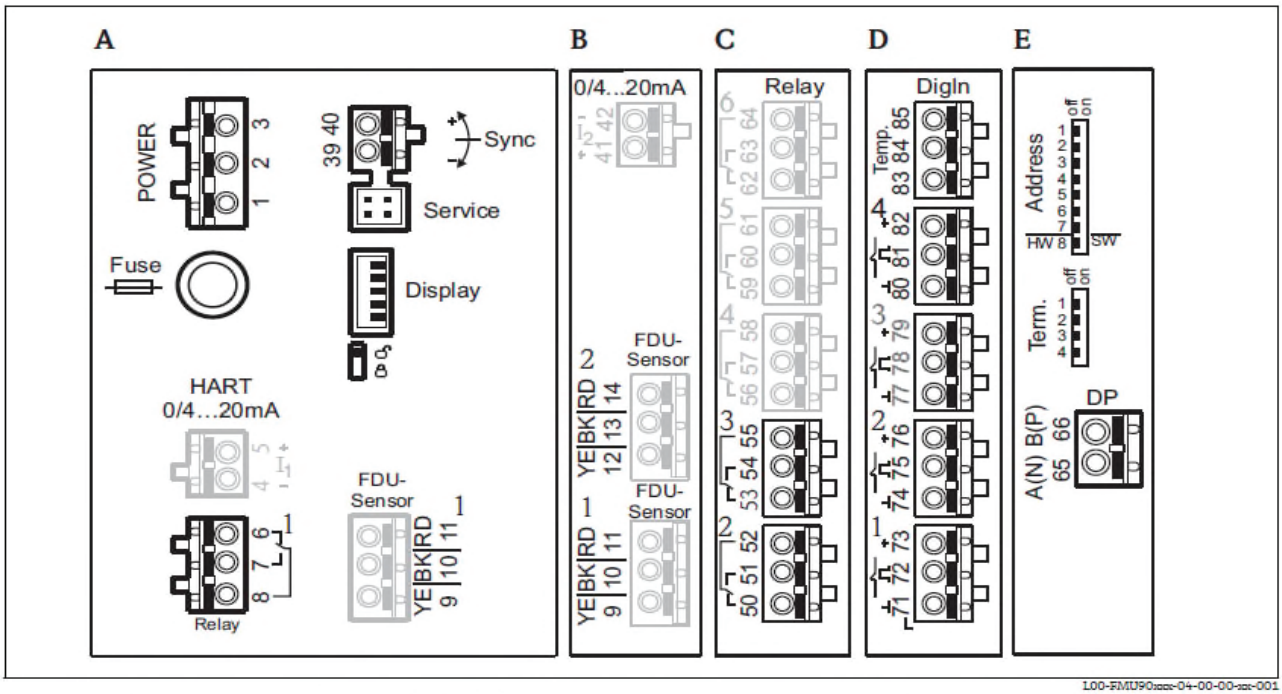


L00-FMU90xxx-04-00-00-xx-001

*Terminals of the Prosonic S (the terminals depicted in grey are not present in every instrument version)*

*A Basic terminal area*
*B – E Optional terminal areas (present if the respective option has been selected in the product structure)*

2x units
FQIT-02-328
FQIT-03-695

REVIEWED BY CONTRACTOR
Kudlik Construction Ltd.
NAME: Sandra Rousseau P.Eng
DATE: Jan 28, 2019

NORCLAIR
MÉCANIQUE DE PROCÉDÉ

# SHOP DRAWINGS

**DA-IC-15 Flowmeter (final effluent and TWAS)**

**Date :** 2019-01-24

| **Information general** | |
|---|---|
| Project : **WWTP UPGRADE - IQALUIT** | |
| Client : Kudlik Construction Ltd.<br>To : Sandra Rousseau P.Eng., Project Manager | Project number : **2018-062**<br>E-mail : srousseau@kudlik.biz |
| Contractor : **Norclair inc.** | Project number Norclair : **P1039** |
| Address : 1100, Mountain Masson, Laval, QC, Canada H7E 4P2 | |
| Project Manager : Hugo Chartier, Project Manager | E-mail: hchartier@norclair.ca |
| Phone : 450-688-4012 # 706 | Cell. : 514-703-0263 |

| **Information, subcontractor or supplier** | |
|---|---|
| Sub/supplier : Endress & Hauder | |
| Contact : Stéphane Raymond | Phone : 514-940-2288 |

| **Information on the equipment** | |
|---|---|
| Speciality : **Instrumentation and Control** | |
| Equipment : Flowmeter (final effluent and TWAS) | |
| Drawing reference : | |
| Specification reference : 47 30 02 data sheets | Division : |
| Article : | Number of pages : 7 |

**CONSULTANT APPROVAL**

Comments within

STANTEC PROJECT #: 110126045

SUBMITTAL # DA-IC-15 (2019-01-24)

This review by Stantec is for general conformance with the design concept of Stantec's design of the:

☐ Architectural ☐ Structural ☐ Mechanical ☐ Electrical ☑ Other Instrumentation

component(s) only and does not mean that Stantec has verified or approves the shop drawing(s). The Contractor remains solely responsible for the shop drawing(s) and this review by Stantec does not relieve the Contractor of the Contractor's responsibility for errors or omissions in the shop drawing(s) or for meeting all requirements of the contract documents. This review does not mean that Stantec approves the detailed design inherent in the shop drawing, responsibility for which shall remain with the Contractor submitting same, nor does this review mean that Stantec accepts any deviation of the shop drawing(s) from the contract documents. The Contractor is responsible for confirming all dimensions and correlating them at the job site, for all construction means, methods and techniques, and for coordination of construction work of all trades, including coordination of all shop drawings.

Stantec

☐ REVIEWED
☑ REVIEWED, AS NOTED
☐ REVISE AND RESUBMIT
☐ NOT REVIEWED

DATE 2018-JAN-28

BY David Hutchison, P.Eng.

1100, montée Masson
Laval, QC, Canada
H7E 4P2

Phone. : 450-688-4012
Fax : 450-661-6341
E-Mail : info@norclair.ca
www.norclair.ca

Endress+Hauser
People for Process Automation

| Drawing # | 2002597302 | Project | IQALUIT |
|---|---|---|---|
| | | Customer | NORCLAIR |

Instrument description

**5W4C3F-4497/0**
5W4C3F-C6ALHA0DUA1K0A+Z1
Promag W 400, 5W4C3F, DN350 14"

C6 Approval: CSA C/US NI Cl.I Div.2 Gr. ABCD
A Design: Insertion length short ISO/DVGW until DN400, DN450-2000 1:1
L Power Supply: 100-240VAC/24VAC/DC
H Output; Input: 4-20mA HART, pulse/freq.,switch output
A Housing: Compact, alu, coated
0 Cable, Remote Version: Not used
D Electrical Connection: Thread NPT1/2
U Liner: Polyurethane
A1K Process Connection: Cl.150, carbon steel, flange ASME B16.5
0 Electrodes: 1.4435/316L
A Calibration Flow: 0.5%

4-20 mA = 0 - 200 L/s
Pulse @ 200L
Pulse timing: 100ms ON, 100ms OFF

Adress: 1100 Montee Masson
Laval QC H7E 4P2

Contact: **Jean-François Lessard**

**450-688-4012**

jflessard@norclair.ca

Endress+hauser Canada Ltée
6800 Côte de liesse, suite 100
Ville Saint-Laurent, Québec, Canada
H4T 2A7

Telephone 514 733-0254**x2288**
Fax 514 733-2924
E-mail stephane.raymond@endress.com

| Prepare by | Stephane Raymond |
|---|---|

| built as | | Drawing for | |
|---|---|---|---|
| As is | X | Approbation: | X |
| Equivalent: | | Information: | |
| Substitution: | | Coordination: | |

Tag number FQIT-02-328

| Revision | Initial | Date |
|---|---|---|
| **0** | **SR** | **January 24 2019** |
| | | |
| | | |
| | | |

Due to a transition phase from DIN 2501 to EN 1092-1 (2013) you may still receive flanges according DIN. Additional details and dimensions are available in the Operating Instructions (BA)

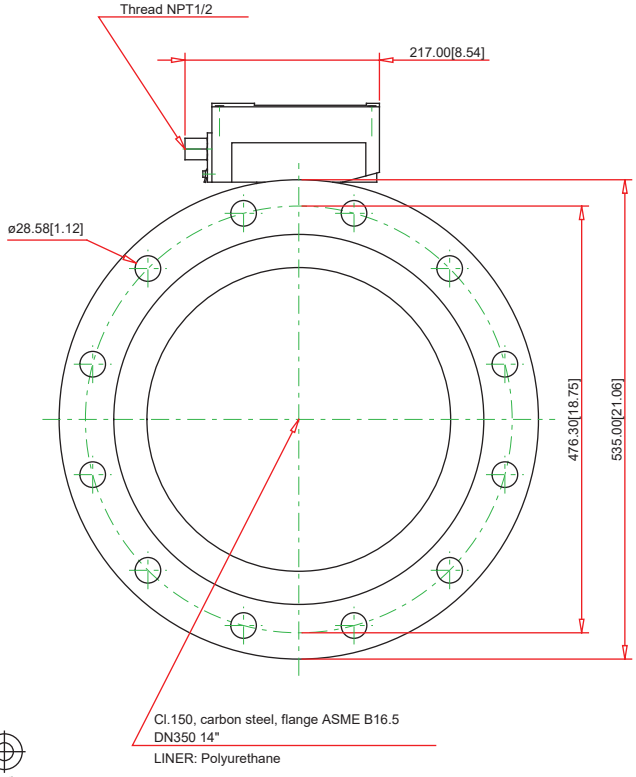


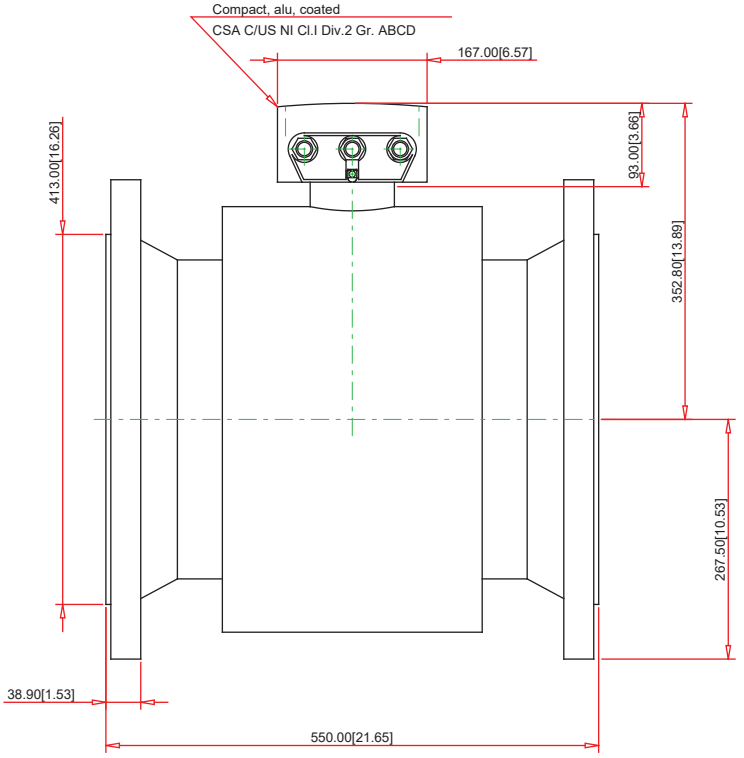


First Angle Projection

## Disclaimer:

To ensure the accuracy of the information contained in this document every reasonable effort has been made. Endress+Hauser may not make any warranties,express or implied, with respect to the accuracy, the completeness or the technical or commercial usefulness of this document. Endress+Hauser may modify or replace this document any time.

© 24.01.2019 Endress+Hauser

Order Code :
5W4C3F-C6ALHA0DUA1K0A+Z1

Product Description :
Promag W 400, 5W4C3F, DN350 14"

www.addresses.endress.com

Endress+Hauser

People for Process Automation

*Supply voltage*

| **Order code "Power supply"** | **Terminal numbers** | **terminal voltage** | | **Frequency range** |
|---|---|---|---|---|
| Option **L** (wide range power unit) | 1 (L+/L), 2 (L-/N) | DC 24 V | ±25% | – |
| | | AC 24 V | ±25% | 50/60 Hz, ±4 Hz |
| | | AC 100 to 240 V | −15 to +10% | 50/60 Hz, ±4 Hz |

*Signal transmission 0-20 mA/4-20 mA HART and additional outputs and inputs*

| **Order code for "Output" and "Input"** | **Terminal numbers** | | | | | | | |
|---|---|---|---|---|---|---|---|---|
| | **Output 1** | | **Output 2** | | **Output 3** | | **Input** | |
| | **26 (+)** | **27 (-)** | **24 (+)** | **25 (-)** | **22 (+)** | **23 (-)** | **20 (+)** | **21 (-)** |
| Option **H** | ▪ 4-20 mA HART (active)<br>▪ 0-20 mA (active) | | Pulse/frequency output (passive) | | Switch output (passive) | | - | |

Endress+Hauser
People for Process Automation

| Drawing # | 2002597302 | Project | IQALUIT |
|---|---|---|---|
| | | Customer | NORCLAIR |

Instrument description

**5W4C80-9F26/0**
5W4C80-C6ALHA0DUA1K0A+Z1
Promag W 400, 5W4C80, DN80 3"

C6 Approval: CSA C/US NI Cl.I Div.2 Gr. ABCD
A Design: Insertion length short ISO/DVGW until DN400, DN450-2000 1:1
L Power Supply: 100-240VAC/24VAC/DC
H Output; Input: 4-20mA HART, pulse/freq.,switch output
A Housing: Compact, alu, coated
0 Cable, Remote Version: Not used
D Electrical Connection: Thread NPT1/2
U Liner: Polyurethane
A1K Process Connection: Cl.150, carbon steel, flange ASME B16.5
0 Electrodes: 1.4435/316L
A Calibration Flow: 0.5%

4-20 mA = 0 - 5 L/s
Pulse @ 10L
Pulse timing:
100ms ON, 100ms OFF

Note: product is thickened sludge
Solids content ~3-5%

Adress: 1100 Montee Masson
Laval QC H7E 4P2

Contact: **Jean-François Lessard**
**450-688-4012**
jflessard@norclair.ca

Manufacturer

Endress+hauser Canada Ltée
6800 Côte de liesse, suite 100
Ville Saint-Laurent, Québec, Canada
H4T 2A7

Phone 514 733-0254**x2288**
Fax 514 733-2924
E-mail stephane.raymond@endress.com

| Prepare by | Stephane Raymond |
|---|---|

| built as | | Drawing for | |
|---|---|---|---|
| As is | X | Approbation: | X |
| Equivalent: | | Information: | |
| Substitution: | | Coordination: | |

Tag number FQIT-03-695

| Revision | Initial | Date |
|---|---|---|
| **0** | **SR** | **January 24 2019** |
| | | |
| | | |
| | | |

Due to a transition phase from DIN 2501 to EN 1092-1 (2013) you may still receive flanges according DIN. Additional details and dimensions are available in the Operating Instructions (BA)

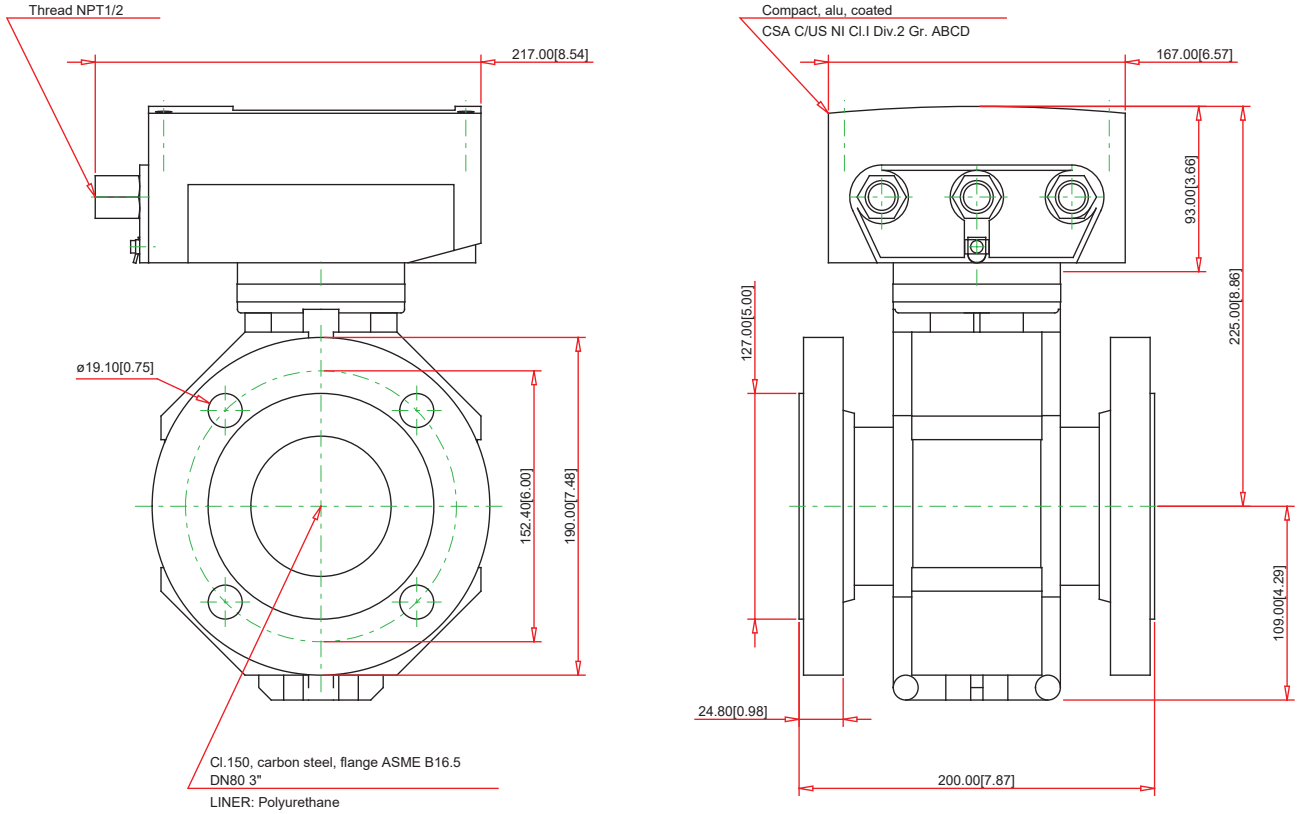


First Angle Projection

## Disclaimer:

To ensure the accuracy of the information contained in this document every reasonable effort has been made. Endress+Hauser may not make any warranties,express or implied, with respect to the accuracy, the completeness or the technical or commercial usefulness of this document. Endress+Hauser may modify or replace this document any time.

© 24.01.2019 Endress+Hauser

Order Code :
5W4C80-C6ALHA0DUA1K0A+Z1

Product Description :
Promag W 400, 5W4C80, DN80 3"

www.addresses.endress.com

Endress+Hauser

People for Process Automation

*Supply voltage*

| **Order code "Power supply"** | **Terminal numbers** | **terminal voltage** | | **Frequency range** |
|---|---|---|---|---|
| Option **L** (wide range power unit) | 1 (L+/L), 2 (L-/N) | DC 24 V | ±25% | – |
| | | AC 24 V | ±25% | 50/60 Hz, ±4 Hz |
| | | AC 100 to 240 V | −15 to +10% | 50/60 Hz, ±4 Hz |

*Signal transmission 0-20 mA/4-20 mA HART and additional outputs and inputs*

| **Order code for "Output" and "Input"** | **Terminal numbers** | | | | | | | |
|---|---|---|---|---|---|---|---|---|
| | **Output 1** | | **Output 2** | | **Output 3** | | **Input** | |
| | **26 (+)** | **27 (-)** | **24 (+)** | **25 (-)** | **22 (+)** | **23 (-)** | **20 (+)** | **21 (-)** |
| Option **H** | ▪ 4-20 mA HART (active)<br>▪ 0-20 mA (active) | | Pulse/frequency output (passive) | | Switch output (passive) | | - | |

1x unit
PIT-02-195

REVIEWED BY CONTRACTOR
Kudlik Construction Ltd.
NAME: Sandra Rousseau P.Eng
DATE: Jan 28, 2019

NORCLAIR
MÉCANIQUE DE PROCÉDÉ

# SHOP DRAWINGS

**DA-IC-16 Pressure monitor (PIT)**

**Date :** 2019-01-24

| **Information general** | |
|---|---|
| Project : **WWTP UPGRADE - IQALUIT** | |
| Client : Kudlik Construction Ltd.<br>To : Sandra Rousseau P.Eng., Project Manager | Project number : **2018-062**<br>E-mail : srousseau@kudlik.biz |
| Contractor : **Norclair inc.** | Project number Norclair : **P1039** |
| Address : 1100, Mountain Masson, Laval, QC, Canada H7E 4P2 | |
| Project Manager : Hugo Chartier, Project Manager | E-mail: hchartier@norclair.ca |
| Phone : 450-688-4012 # 706 | Cell. : 514-703-0263 |

| **Information, subcontractor or supplier** | |
|---|---|
| Sub/supplier : Endress & Hauder | |
| Contact : Stéphane Raymond | Phone : 514-940-2288 |

| **Information on the equipment** | |
|---|---|
| Speciality : **Instrumentation and Control** | |
| Equipment : Pressure monitor (PIT) | |
| Drawing reference : | |
| Specification reference : 47 30 02 page 7 | Division : |
| Article : | Number of pages : 4 |

**CONSULTANT APPROVAL**

Comments within

STANTEC PROJECT #: 110126045
SUBMITTAL # DA-IC-16 (2019-01-24)

This review by Stantec is for general conformance with the design concept of Stantec's design of the:

☐ Architectural ☐ Structural ☐ Mechanical ☐ Electrical ☑ Other Instrumentation

component(s) only and does not mean that Stantec has verified or approves the shop drawing(s). The Contractor remains solely responsible for the shop drawing(s) and this review by Stantec does not relieve the Contractor of the Contractor's responsibility for errors or omissions in the shop drawing(s) or for meeting all requirements of the contract documents. This review does not mean that Stantec approves the detailed design inherent in the shop drawing, responsibility for which shall remain with the Contractor submitting same, nor does this review mean that Stantec accepts any deviation of the shop drawing(s) from the contract documents. The Contractor is responsible for confirming all dimensions and correlating them at the job site, for all construction means, methods and techniques, and for coordination of construction work of all trades, including coordination of all shop drawings.

Stantec

☐ REVIEWED
☑ REVIEWED, AS NOTED
☐ REVISE AND RESUBMIT
☐ NOT REVIEWED

DATE 2018-JAN-28
BY David Hutchison, P.Eng.

1100, montée Masson
Laval, QC, Canada
H7E 4P2

Phone. : 450-688-4012
Fax : 450-661-6341
E-Mail : info@norclair.ca
www.norclair.ca

Endress+Hauser
People for Process Automation

| Drawing # | 2002606968 | Project | IQALUIT |
|---|---|---|---|
| | | Customer | NORCLAIR |

Instrument description

**PMP55-56QX2/0**
PMP55-CD12ID1HGCU5JA1A
Cerabar M PMP55

CD Approval: CSA C/US General Purpose
1 Output: 4-20mA
2 Display, Operation: W/o LCD, push button on electronics
I Housing: F31 Alu
D Electrical Connection: Thread NPT1/2, IP66/68 NEMA4X/6P
1H Sensor Range: 1bar/100kPa/15psi gauge, 10mH2O/33ftH2O/400inH2O overload: 10bar/1MPa/150psi
G Reference Accuracy: Standard
C Calibration; Unit: Sensor range; kPa/MPa
U5J Process Connection: Thread ANSI MNPT1, 316L, flush mount
A Membrane Material: 316L
1 Fill Fluid: Silicone oil
A Diaphragm Seal Connection: Direct

4-20 mA = 0 - 100 kPa

Adress: 1100 Montee Masson
Laval QC H7E 4P2

ct: **Hugo Chartier**

Telephone: **450-688-4012**
Fax
E-mail hchartier@norclair.ca

Manufacturer

Endress+hauser Canada Ltée
6800 Côte de liesse, suite 100
Ville Saint-Laurent, Québec, Canada
H4T 2A7

Telephone 514 733-0254**x2288**
Fax 514 733-2924
E-mail stephane.raymond@endress.com

| Prepare by | Stephane Raymond |
|---|---|

| built as | | Drawing for | |
|---|---|---|---|
| As is | X | Approbation: | X |
| Equivalent: | | Information: | |
| Substitution: | | Coordination: | |

Tag number

| Revision | Initial | Date |
|---|---|---|
| **0** | **SR** | **January 24 2019** |
| | | |
| | | |
| | | |

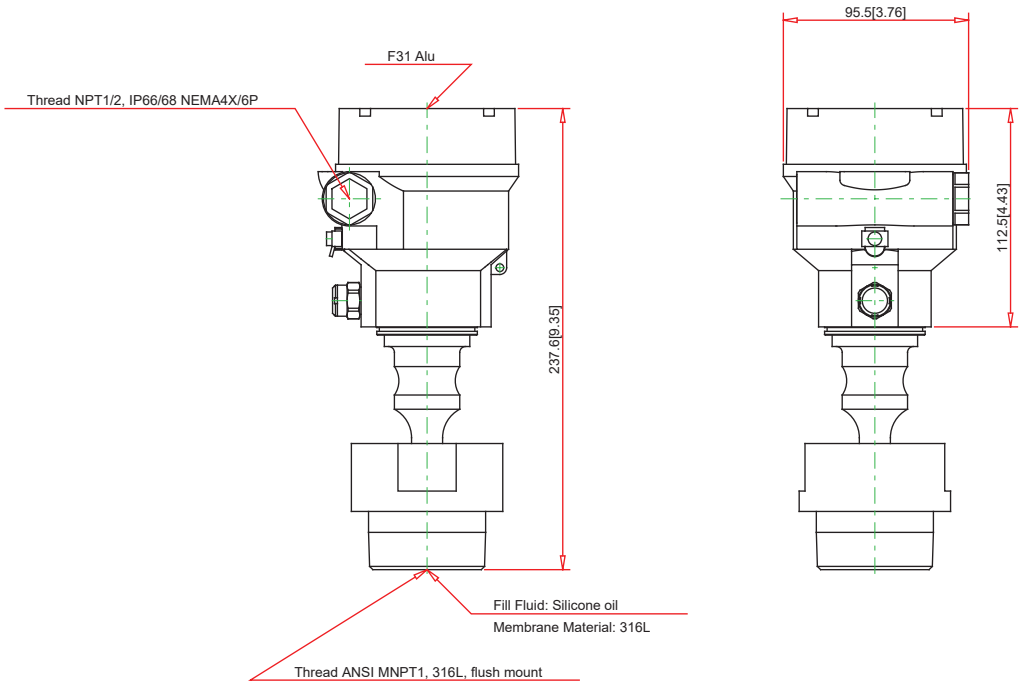


First Angle Projection

## Disclaimer:

To ensure the accuracy of the information contained in this document every reasonable effort has been made. Endress+Hauser may not make any warranties,express or implied, with respect to the accuracy, the completeness or the technical or commercial usefulness of this document. Endress+Hauser may modify or replace this document any time.

© 24.01.2019 Endress+Hauser

Order Code :
PMP55-CD12ID1HGCU5JA1A

Product Description :
Cerabar M PMP55

www.addresses.endress.com

Endress+Hauser

People for Process Automation

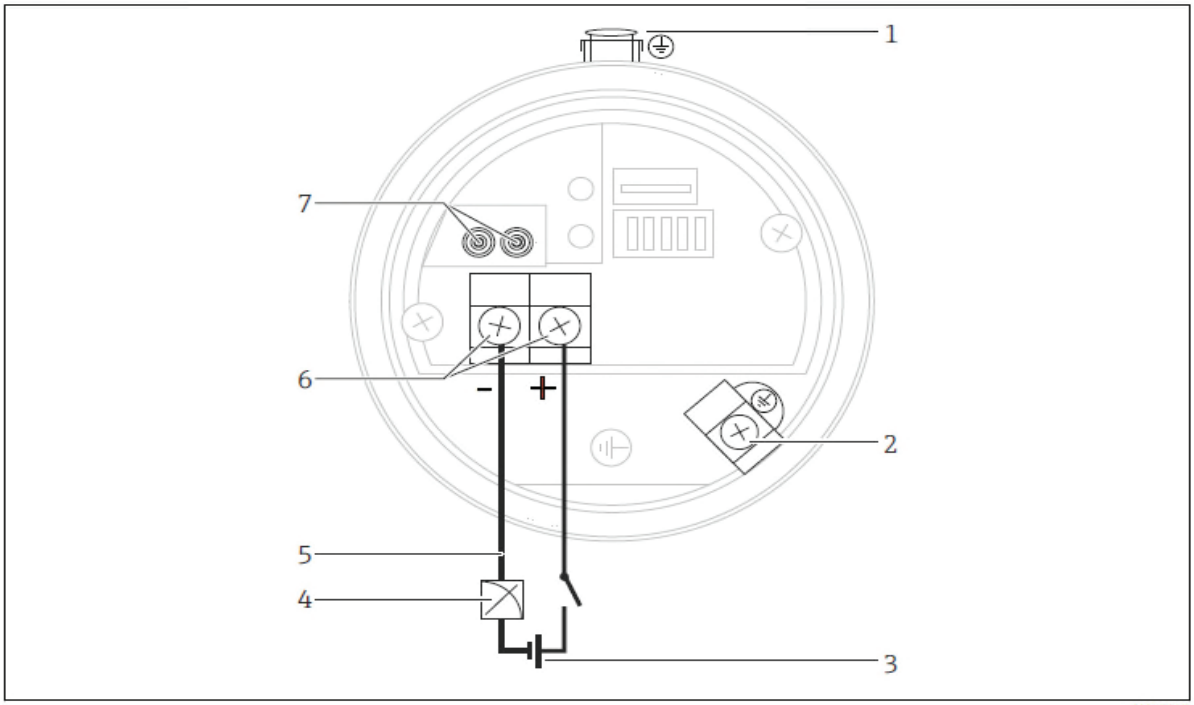


1 *External grounding terminal (only for devices with certainly approvals or if "Measuring point" (TAG) is ordered)*
2 *Internal grounding terminal*
3 *Supply voltage → 22*
4 *4...20 mA for HART devices*
5 *For HART and FOUNDATION Fieldbus devices: With a handheld terminal, all the parameters can be configured anywhere along the bus line via menu operation.*
6 *Terminals*
7 *For HART devices: test terminals, see section "Taking 4 to 20 mA test signal" → 22*

3x units
FQIT-04-798
FQIT-04-799
FQIT-04-999

REVIEWED BY CONTRACTOR
Kudlik Construction Ltd.
NAME: Sandra Rousseau P.Eng.
DATE: Jan 30, 2019

NORCLAIR
MÉCANIQUE DE PROCÉDÉ

# SHOP DRAWINGS

**DA-IC-17 Flowmeter (polymer)**

**Date :** 2019-01-25

| **Information general** | |
|---|---|
| Project : **WWTP UPGRADE - IQALUIT** | |
| Client : Kudlik Construction Ltd.<br>To : Sandra Rousseau P.Eng., Project Manager | Project number : **2018-062**<br>E-mail : srousseau@kudlik.biz |
| Contractor : **Norclair inc.** | Project number Norclair : **P1039** |
| Address : 1100, Mountain Masson, Laval, QC, Canada H7E 4P2 | |
| Project Manager : Hugo Chartier, Project Manager | E-mail: hchartier@norclair.ca |
| Phone : 450-688-4012 # 706 | Cell. : 514-703-0263 |

| **Information, subcontractor or supplier** | |
|---|---|
| Sub/supplier : Endress & Hauder | |
| Contact : Stéphane Raymond | Phone : 514-940-2288 |

| **Information on the equipment** | |
|---|---|
| Speciality : **Instrumentation and Control** | |
| Equipment : Flowmeter (polymer) | |
| Drawing reference : | |
| Specification reference : **47 30 02 data sheets** | Division : |
| Article : | Number of pages : 7 |

**CONSULTANT APPROVAL**

See comments within.

SHOP DRAWINGS ARE REVIEWED UNLESS NOTED OTHERWISE
REVIEWED AS MODIFIED [X]
REVISE & RESUBMIT [ ]
SEAL & SIGNATURE REQUIRED [ ]
Stantec
DATE February 7/19
SIGNATURE Ellie Brun
REVIEW BY STANTEC IS FOR THE SOLE PURPOSE OF ASCERTAINING GENERAL CONFORMITY WITH DESIGN. CONTRACTOR IS RESPONSIBLE FOR DIMENSIONS, FABRICATION AND CONSTRUCTION METHODS, COORDINATION OF SUB-TRADES, DETAIL DESIGN OF COMPONENTS, AND ERRORS OR OMISSIONS ON SHOP DRAWINGS.

1100, montée Masson
Laval, QC, Canada
H7E 4P2

Phone : 450-688-4012
Fax : 450-661-6341
E-Mail : info@norclair.ca
www.norclair.ca

Endress+Hauser
People for Process Automation

| Drawing # | 2002597302 | Project | IQALUIT |
|---|---|---|---|
| | | Customer | NORCLAIR |

Instrument description

**50H08-F3K0/0**
50H08-HAAA1RA0BAAD+Z1
Promag 50H08, DN08 5/16"

H Process Connection: Cl.150, PVDF, flange ANSI B16.5
A Seal: O-ring, EPDM
A Electrodes: 1.4435/316L + grounding rings
A Calibration: 0.5%
1 Additional Test, certificate: w/o
R Approval: FM NI Cl. I Div. 2 / CSA Cl. I Div. 2
A Housing: Compact Alu, IP67 NEMA4X
0 Cable, Remote Version: Not used
B Cable Entry: Thread NPT 1/2
A Power Supply; Display: 85-260VAC, WEA, 2-line + push buttons, WEA= language DE+EN+FR+IT+ES+PT+NL
A Adjustment; Software Feature: Factory setup; basic version
D Output, Input: 4-20mA SIL HART + freq.+ status+stat.In
Z1 >>Marking: Tagging (TAG), see additional spec.Date: 24-Jan

→ Pulse output: 100ms on / 100ms off
→ Calibrate to 0-01 L/s

Adress: 1100 Montee Masson
Laval QC H7E 4P2

Contact: **Hugo Chartier**
Telephone: **450-688-4012**
Fax
E-mail hchartier@norclair.ca

Manufacturer

Endress+hauser Canada Ltée
6800 Côte de liesse, suite 100
Ville Saint-Laurent, Québec, Canada
H4T 2A7

Telephone 514 733-0254**x2288**
Fax 514 733-2924
E-mail stephane.raymond@endress.com

| Prepare by | Stephane Raymond |
|---|---|

| built as | | Drawing for | |
|---|---|---|---|
| As is | X | Approbation: | X |
| Equivalent: | | Information: | |
| Substitution: | | Coordination: | |

Tag number FQIT-04-798
FQIT-04-799

Modification of diameter by E&H using their sizing tool and data provided by Veolia:
(https://www.ca.endress.com/en/product-tools/life-cycle-management/planning-engineering-traceability/applicator-select-size-instrument)
Flow range: 30-600 l/h
Pressure range: 80 psig
Temperature range: 0-20 degC
Viscosity: 400cP
Stantec to review sizing. HC, 2019-01-25

| Revision | Initial | Date |
|---|---|---|
| **0** | **SR** | **January 25 2019** |
| | | |
| | | |
| | | |



4B

Tag: FQIT-04-798
FQIT-04-799

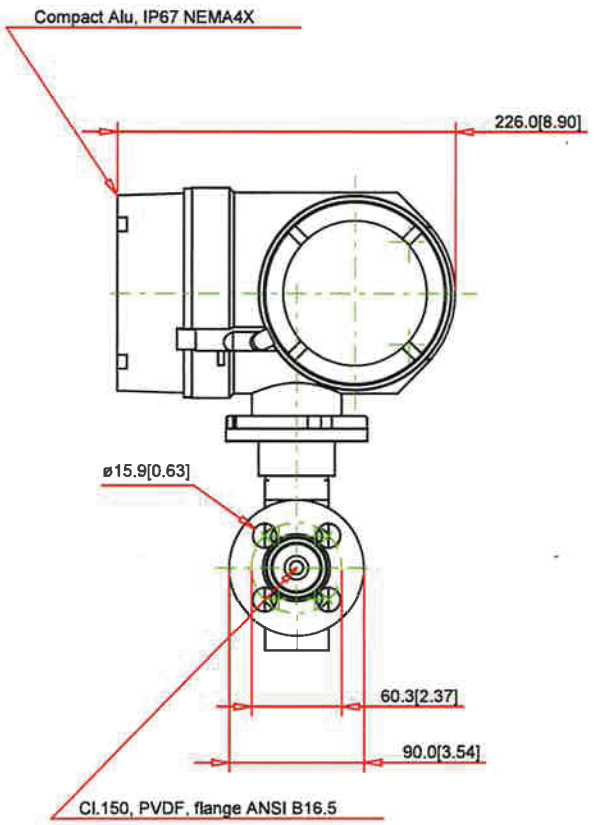


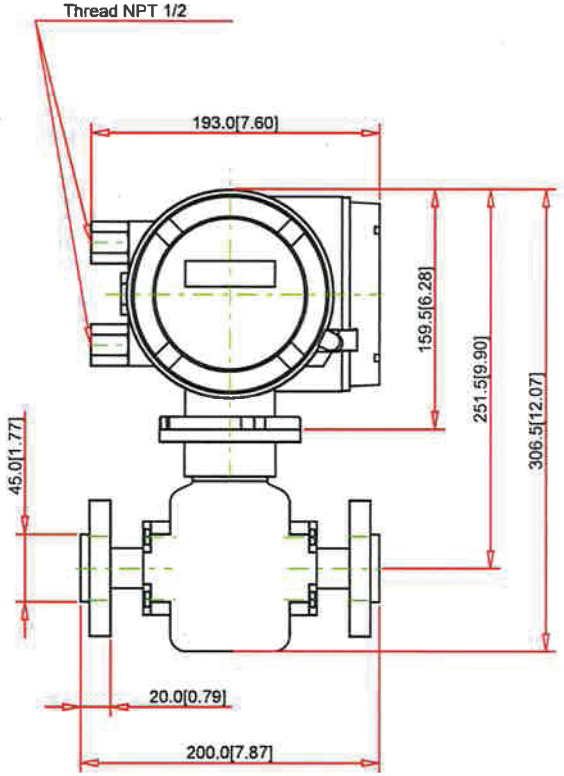


First Angle Projection

## Disclaimer:

To ensure the accuracy of the information contained in this document every reasonable effort has been made. Endress+Hauser may not make any warranties,express or implied, with respect to the accuracy, the completeness or the technical or commercial usefulness of this document. Endress+Hauser may modify or replace this document any time.

© 25.01.2019 Endress+Hauser

Order Code :
50H08-HAAA1RA0BAAD+Z1

Product Description :
Promag 50H

www.addresses.endress.com

Endress+Hauser

People for Process Automation

u.B.

*Terminal assignment, Promag 50*

| Order code for "Input/Output" | Terminal No. (inputs/outputs) | | | |
|---|---|---|---|---|
| | 20 (+) / 21 (–) | 22 (+) / 23 (–) | 24 (+) / 25 (–) | 26 (+) / 27 (–) |
| W | – | – | – | Current output HART |
| A | – | – | Frequency output | Current output HART |
| D | Status input | Status output | Frequency output | Current output HART |
| H | – | – | – | PROFIBUS PA |
| J | – | – | +5 V (external termination) | PROFIBUS DP |
| S | – | – | Frequency output, Ex i | Current output, Ex i, active, HART |
| T | – | – | Frequency output, Ex i | Current output, Ex i, passive, HART |

Ground terminal → 🖹 10



4.B.

**Endress+Hauser**
People for Process Automation

| Drawing # | 2002597302 | Project | IQALUIT |
|---|---|---|---|
| | | Customer | NORCLAIR |

Instrument description

**50H15-DDR0/0**
50H15-HAAA1RA0BAAD+Z1
Promag 50H15, DN15 1/2"

H Process Connection: Cl.150, PVDF, flange ANSI B16.5
A Seal: O-ring, EPDM
A Electrodes: 1.4435/316L + grounding rings
A Calibration: 0.5%
1 Additional Test, certificate: w/o
R Approval: FM NI Cl. I Div. 2 / CSA Cl. I Div. 2
A Housing: Compact Alu, IP67 NEMA4X
0 Cable, Remote Version: Not used
B Cable Entry: Thread NPT 1/2
A Power Supply; Display: 85-260VAC, WEA, 2-line + push buttons, WEA= language DE+EN+FR+IT+ES+PT+NL
A Adjustment; Software Feature: Factory setup; basic version
D Output, Input: 4-20mA SIL HART + freq.+ status+stat.In
Z1 >>Marking: Tagging (TAG), see additional spec.Date: 24-Jan

Pulse output: 1s on / 1s off

Calibrate to 0-1 L/s

Adress: 1100 Montee Masson
Laval QC H7E 4P2

Contact: **Hugo Chartier**
Telephone: **450-688-4012**
Fax
E-mail hchartier@norclair.ca

Manufacturer

Endress+hauser Canada Ltée
6800 Côte de liesse, suite 100
Ville Saint-Laurent, Québec, Canada
H4T 2A7

Telephone 514 733-0254**x2288**
Fax 514 733-2924
E-mail stephane.raymond@endress.com

| Prepare by | Stephane Raymond |
|---|---|

| built as | | Drawing for | |
|---|---|---|---|
| As is | X | Approbation: | X |
| Equivalent: | | Information: | |
| Substitution: | | Coordination: | |

Tag number FQIT-04-999

Modification of diameter by E&H using their sizing tool and data provided by Veolia:
(https://www.ca.endress.com/en/product-tools/life-cycle-management/planning-engineering-traceability/applicator-select-size-instrument)
Flow range: 150-3000 l/h
Pressure range: 80 psig
Temperature range: 0-20 degC
Viscosity: 400cP
Stantec to review sizing.HC, 2019-01-25

| Revision | Initial | Date |
|---|---|---|
| **0** | **SR** | **January 25 2019** |
| | | |
| | | |
| | | |



4/5

Tag: FQIT-04-999

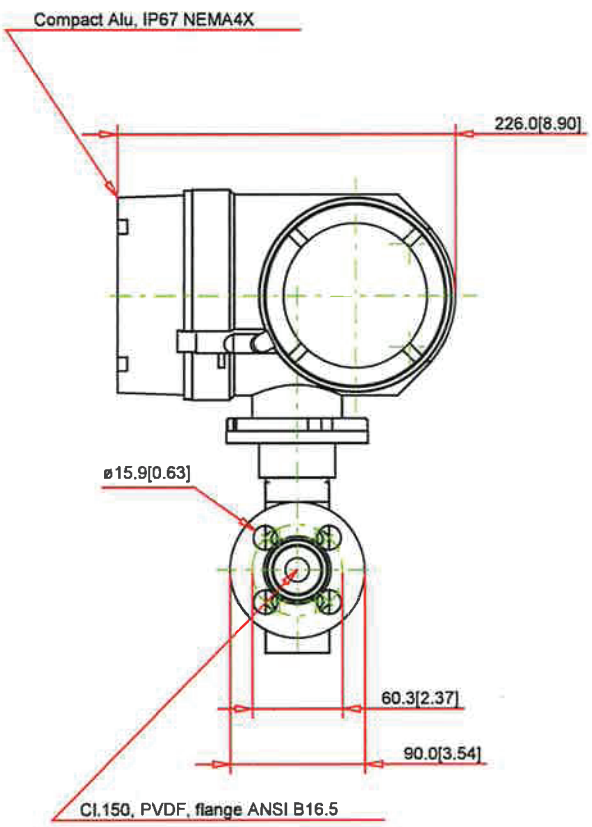


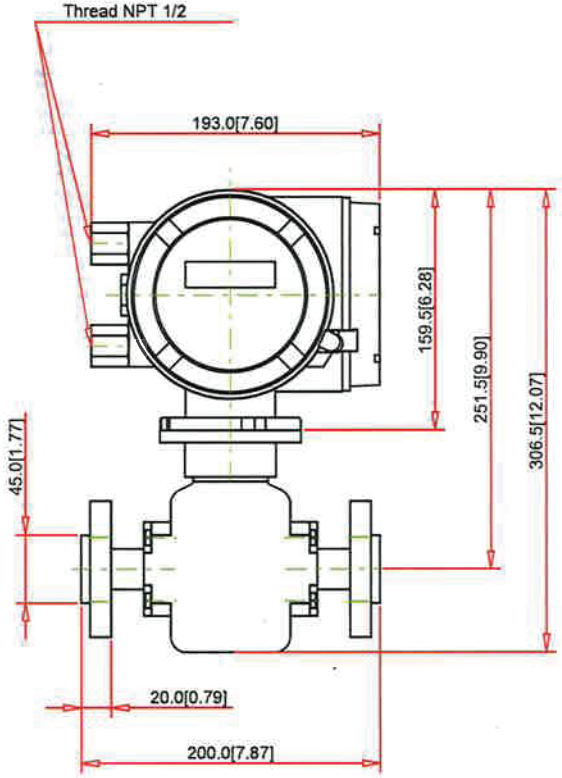


First Angle Projection

## Disclaimer:

To ensure the accuracy of the information contained in this document every reasonable effort has been made. Endress+Hauser may not make any warranties,express or implied, with respect to the accuracy, the completeness or the technical or commercial usefulness of this document. Endress+Hauser may modify or replace this document any time.

© 25.01.2019 Endress+Hauser

Order Code :
50H15-HAAA1RA0BAAD+Z1

Product Description :
Promag 50H

www.addresses.endress.com

Endress+Hauser

People for Process Automation

*Terminal assignment, Promag 50*

| Order code for "Input/Output" | Terminal No. (inputs/outputs) | | | |
|---|---|---|---|---|
| | 20 (+) / 21 (–) | 22 (+) / 23 (–) | 24 (+) / 25 (–) | 26 (+) / 27 (–) |
| W | – | – | – | Current output HART |
| A | – | – | Frequency output | Current output HART |
| D | Status input | Status output | Frequency output | Current output HART |
| H | – | – | – | PROFIBUS PA |
| J | – | – | +5 V (external termination) | PROFIBUS DP |
| S | – | – | Frequency output, Ex i | Current output, Ex i, active, HART |
| T | – | – | Frequency output, Ex i | Current output, Ex i, passive, HART |

Ground terminal → 10

REVIEWED BY CONTRACTOR

Kudlik Construction Ltd.

NAME: Sandra Rousseau P.Eng

DATE: Mar 20, 2019

We think the panel is too small for all wires

NORCLAIR
MÉCANIQUE DE PROCÉDÉ

# SHOP DRAWINGS

**DA-IC-18 CPL-901 Panel**

**Date :** 2019-03-20

| **Information general** | |
|---|---|
| Project : **WWTP UPGRADE - IQALUIT** | |
| Client : Kudlik Construction Ltd.<br>To : Sandra Rousseau P.Eng., Project Manager | Project number : **2018-062**<br>E-mail : srousseau@kudlik.biz |
| Contractor : **Norclair inc.** | Project number Norclair : **P1039** |
| Address : 1100, Mountain Masson, Laval, QC, Canada H7E 4P2 | |
| Project Manager : Hugo Chartier, Project Manager | E-mail: hchartier@norclair.ca |
| Phone : 450-688-4012 # 706 | Cell. : 514-703-0263 |

| **Information, subcontractor or supplier** | |
|---|---|
| Sub/supplier : Entreprises LM | |
| Contact : Olivier Chalifoux-Lauzon | Phone : 514-904-2947 |

**Information on the equipment**

Speciality : **Instrumentation and Control**

Equipment : CPL-901

Drawing reference :

Specification reference : 47 30 01

Article :

STANTEC PROJECT #: 110126045

SUBMITTAL # DA-IC-18 (2019-03-20)

This review by Stantec is for general conformance with the design concept of Stantec's design of the:

☐ Architectural ☐ Structural ☐ Mechanical ☒ Electrical ☑ Other Instrumentation

component(s) only and does not mean that Stantec has verified or approves the shop drawing(s). The Contractor remains solely responsible for the shop drawing(s) and this review by Stantec does not relieve the Contractor of the Contractor's responsibility for errors or omissions in the shop drawing(s) or for meeting all requirements of the contract documents. This review does not mean that Stantec approves the detailed design inherent in the shop drawing, responsibility for which shall remain with the Contractor submitting same, nor does this review mean that Stantec accepts any deviation of the shop drawing(s) from the contract documents. The Contractor is responsible for confirming all dimensions and correlating them at the job site, for all construction means, methods and techniques, and for coordination of construction work of all trades, including coordination of all shop drawings.

Stantec

☐ REVIEWED

☑ REVIEWED, AS NOTED

☐ REVISE AND RESUBMIT

☐ NOT REVIEWED

DATE 2019-APR-04

BY David Hutchison

See notes within.
- Regarding panel capacity, utilize intermediate junction boxes and/or condulets to collect multiple runs of cable into one entry. Only OK for cables of similar type (eg P- cables of similar voltage, analog C- cables, and discrete C- cables).
- Utilize bottom entry for cables where possible
- Reduce excess spare cable and trim excess insulation in the panel
- PLC I/O card wiring harnesses (terminal strip to PLC card wiring only, not field wiring) may be reduced by one size (eg. #18 for analog signals, #16 for discrete signals).

1100, montée Masson
Laval, QC, Canada
H7E 4P2

Phone. : 450-688-4012
Fax : 450-661-6341
E-Mail : info@norclair.ca
www.norclair.ca

# City of Iqaluit

# WWTP Upgrade

# Process automation (Division 47)

# CPL-901
# R0: For approval before assembling

| | | | |
|---|---|---|---|
| Dessiné Par / Drawn By: O. Chalifoux-Lauzon<br>Préparé Par / Prepared By: O. Chalifoux-Lauzon<br>Dernière maj / Last update: 19 mars 2019 | Projet / Project: WWTP Upgrade/CPL-901<br>----<br>Dessin De / Drawing Of: Cover Page<br>Page / de: 01 / 25 | Client / Customer: City of Iqaluit<br>----<br>Projet / Project: P103901 / xxxxxx<br>Dessin N° / Drawing N°: WWTP IQALUIT CPL901_R00.DWG | Entreprises L.M. inc.<br>3006 Ste-Catherine est, Montréal, Québec, H1W 2B8<br>Tél: (514) 523-2831 / 1-800-265-2831, Fax: 514-521-2526 |

| ITEM | DESCRIPTION | MANUFACTURER | PART NUMBER | QTY | |
|---|---|---|---|---|---|
| 1 | TYPE 12 ENCLOSURE (72X60X24) | HOFFMAN | A726024FSDG | 1 | |
| 2 | FULL SIZE MOUNTING PANEL | HOFFMAN | A72P48F1 | 1 | |
| 3 | SIDE MOUNTING PANEL | HOFFMAN | A72SMP20 | 2 | |
| 4 | LAPTOP FOLDING SHELF (LOCATED ON EXTERIOR OF PLC-900) | HOFFMAN | AA615HLF1818 | 1 | |
| 5 | 120 VAC FLUORESCENT LIGHT KIT | HOFFMAN | LF120V18 | 1 | |
| 6 | DOOR SWITCH | HOFFMAN | ALFSWD | 1 | |
| 7 | FLUORESCENT LIGHT BULB | HOFFMAN | F8T5 | 1 | |
| 8 | PLC POWER SUPPLY | AB | 1756-PA75/B | 1 | |
| 9 | CONTROLLOGIX CONTROLLER | AB | 1756-L82E | 1 | |
| 10 | DC DIGITAL INPUT MODULE | AB | 1756-IB32 | 5 | |
| 11 | Left Blank Intentionally | - | - | - | |
| 12 | RELAY OUTPUT MODULE, INDIVIDUALLY ISOLATED | AB | 1756-OW16I | 3 | |
| 13 | Left Blank Intentionally | - | - | - | |
| 14 | ANALOG INPUT MODULE | AB | 1756-IF16 | 3 | |
| 15 | Left Blank Intentionally | - | - | - | |
| 16 | ANALOG OUTPUT MODULE | AB | 1756-OF8I | 2 | |
| 17 | SLOT FILLER | AB | 1756N-2 | 2 | |
| 18 | 17 SLOT CHASSIS | AB | 1756-A17 | 1 | |
| 19 | 30A SINGLE POLE CIRCUIT BREAKER | AB | 1492-SPM1B030 | 1 | |
| 20 | 24VDC POWER SUPPLY 20A | AB | 1606-XLS480E | 2 | |
| 21 | 15A SINGLE POLE CIRCUIT BREAKER | AB | 1492-SP1B150 | 1 | |
| 22 | 10A SINGLE POLE CIRCUIT BREAKER | AB | 1492-SP1B100 | 1 | |
| 23 | WSI 4/2 FUSED TERMINAL BLOCK | WEIDMULLER | 1880410000/1880420000 | AS REQ. | |
| 24 | WSKI 2.5 FEED-THROUGH TERMINAL BLOCK | WEIDMULLER | 1020000000 | AS REQ. | |
| 22 | WTR 2.5 KNIFE SWITCH TERMINAL BLOCK | WEIDMULLER | 1855610000 | AS REQ. | |
| 23 | WPE 1.5/ZZ PROTECTIVE EARTH TERMINAL | WEIDMULLER | 1016500000 | AS REQ. | NOTE 1 |
| 24 | 2-TIER FEED THROUGH TERMINAL BLOCK | PHOENIX CONTACT | UTB 2,5 - 3044636 | AS REQ. | |
| 25 | END COVERS FOR ITEM 24 | PHOENIX CONTACT | UTTB 2,5 - 3044636 | AS REQ. | |
| 26 | 2-TIER FEED SPRING CAGE TERMINAL BLOCK (2 TIER + GROUND) | PHOENIX CONTACT | ST 2,5-PE/I/L-3036097 | AS REQ. | |
| 27 | END COVERS FOR ITEM 26 | PHOENIX CONTACT | D-ST 2,5-3L-3036660 | AS REQ. | |
| 28 | FUSED MODULAR TERMINAL BLOCK WITH FEED THROUGH | PHOENIX CONTACT | UT 4-LHIESS-3214325 | AS REQ. | |
| 29 | PLUG IN BRIDGE (10 POSITIONS) | PHOENIX CONTACT | FBS 10-6 - 3030365 | AS REQ. | |
| 30 | PLUG IN BRIDGE (20 POSITIONS) | PHOENIX CONTACT | FBS 20-6-3030365 | AS REQ. | |
| 31 | TERMINAL BLOCK MARKERS | PHOENIX CONTACT | UM8 - 0830943 | AS REQ. | NOTE 1 |
| 32 | WQB B/24 CROSS CONNECTION STRIPS | WEIDMULLER | 1579060000 | AS REQ. | |
| 33 | SCHT SS GROUP LABEL CARRIER | WEIDMULLER | 1631930000 | AS REQ. | |
| 34 | STR SS PROTECTIVE STRIPS | WEIDMULLER | 1631940000 | AS REQ. | |
| 35 | WEW 35/2 END BRACKET | WEIDMULLER | 1061200000 | AS REQ. | |
| 36 | WAP END PLATE (WDU/SS) | WEIDMULLER | 1050000000 | AS REQ. | |
| 37 | WAP END PLATE (WSI/S) | WEIDMULLER | 1880450000 | AS REQ. | |
| 38 | WS 12/5 TERMINAL MARKERS, CUSTOM NUMBERS | WEIDMULLER | 1609870000 | AS REQ. | |
| 39 | WS 12/6 TERMINAL MARKERS, CUSTOM NUMBERS | WEIDMULLER | 1609910000 | AS REQ. | |
| 40 | DIN RAIL TS35 SLOTTED | WEIDMULLER | 5145000000 | AS REQ. | |
| 41 | FUSE HOLDER (DIN RAIL MOUNT) | WEIDMULLER | 7914760001 | 1 | |
| 42 | GROUND BAR NSCH 15X2 80A | WEIDMULLER | 2802000000 | 1 | |
| 43 | PRESSURE PIECE DKSUE | WEIDMULLER | 2801000000 | AS REQ. | |
| 44 | CLAMPING SCREW BFSC M5X8 | WEIDMULLER | 2967000000 | AS REQ. | |
| 45 | BUSBAR HOLDER BASE SH1 | WEIDMULLER | 4014600000 | AS REQ. | |
| 46 | BUSBAR HOLDER CLIP SH1 | WEIDMULLER | 6359000000 | AS REQ. | |
| 47 | GROUND LUG #2/0 | T&B | ADR21 | 4 | |
| 48 | WIRE DUCT 3"X4" | PANDUIT | G3X4LG6 | AS REQ. | |
| 49 | 3" WIRE DUCT COVER | PANDUIT | C3LG6 | AS REQ. | |
| 50 | 1A GLASS FUSE | BUSSMANN | GMA-1-R | AS REQ. | |
| 51 | 2A GLASS FUSE | BUSSMANN | GMA-2-R | AS REQ. | |
| 52 | 4A GLASS FUSE | BUSSMANN | GMA-4-R | AS REQ. | |
| 53 | 5A GLASS FUSE | BUSSMANN | GMA-5-R | AS REQ. | |
| 54 | 10A GLASS FUSE | BUSSMANN | GMA-10-R | AS REQ. | |
| 55 | 15A GLASS FUSE | BUSSMANN | GMA-15-R | AS REQ. | |
| 56 | 200mA GLASS FUSE | WEIDMULLER | 430400000 | AS REQ. | |
| 57 | ASK 1EN/LD FUSED TERMINAL BLOCK C/W LED INDICATION | WEIDMULLER | 9123140001 | AS REQ. | |
| 58 | 16 PORT ETHERNET SWITCH, C/W DIN MOUNT OPTION | N-TRON | 116TX | 2 | |
| 59 | Left Blank Intentionally | - | - | - | |
| 60 | INTRINSIC SAFETY BARRIER 2-CHANNEL, RELAY OUT, 24VDC | TURCK | IM1-22EX-R | 4 | |
| 61 | UNINTERRUPTIBLE POWER SUPPLY (UPS) | EATON POWERWARE | 9130 3000 | 1 | |
| 62 | UPS RELAY OUTPUT CARD | EATON POWERWARE | 10140618 | 1 | |
| 63 | 120VAC RAIL MOUNT SIMPLEX RECEPTACLE | WEIDMULLER | 9915480000 | 2 | |
| 64 | PROTALK PLUS ALARM DIALER | BARNETT ENGINEERING | B1290 | 1 | |
| 65 | PROTALK PLUS BATTERY BACKUP AND POWER SUPPLY | BARNETT ENGINEERING | B1294 & B1256 | 1 | |
| 66 | SURGE PROTECTION DEVICE (SPD) 120VAC, 15A, C/W FORM C DRY RELAY CONTACTS OPTION | TOTAL PROTECTION SOLUTIONS | TK-LTE120-15A-DIN2-DRC | 1 | |
| 67 | Left Blank Intentionally | - | - | - | |
| 68 | OMRON RELAY WITH LED INDICATOR | OMRON | G2R-1-SND | 3 | |
| 69 | OMRON RELAY SOCKET | OMRON | P2RF-05-E | 3 | |
| 70 | UPS WRAP-AROUND BY PASS, 15A, 120VAC, C/W AUTOMATIC TRANSFER SWITCH AND FORM C OUTPUT | ALWAYS ON | BPS12015-ATS-DCC | 1 | |
| 71 | 24 VDC POWER SUPPLY REDUNDANCY MODULE | AB | 1606-XLSRED40 | 1 | |
| 72 | 15A, 120 VAC, TAMPER RESISTENT DUPLEX RECEPTACLE | LEVITION | T5320-W | 1 | |
| 73 | CLEAR PLASTIC DUPLEX RECEPTACLE COVER | INTERMATIC | WP3100C | 1 | |
| 74 | RJ45 CAT 6 ETHERNET DATA PORT | WEIDMULLER | IE-FCM-RJ45-C | 1 | |
| 75 | Left Blank Intentionally | - | - | - | |
| 76 | REMOVEABLE TERMINAL BLOCK | AB | 1756-TBCH | 13 | |
| 77 | REMOVEABLE TERMINAL BLOCK | AB | 1756-TBNH | 1 | |
| 78 | 15.6" HMI TOUCHSCREEN MONITOR c/w 24V/12V CONVERTER | ELO | E331799 | 1 | |
| 79 | HMI COMPUTER SYSTEM | AXIOMTEK | eBOX560-880-FL | 1 | |

1 BILL OF MATERIALS
PC-203 NO SCALE

NAMEPLATE SCHEDULE

| ITEM | TEXT DESCRIPTION | COLOUR | SIZE (WxH) | QTY |
|---|---|---|---|---|
| A | IQALUIT WWTP/SECONDARY/TREATMENT/INSTRUMENTATION/CONTROL PANEL/CP-901 | BLK/WHT Letters | 150X110 | 1 |
| B | WARNING/VOLTAGES FROM MORE/THAN ONE SOURCE | RED/WHT Letters | 175X75 | 1 |
| C | LAPTOP ONLY | BLK/WHT Letters | 100X25 | 1 |
| D | UPS | BLK/WHT Letters | 75X25 | 1 |
| E | WIRELESS ONLY | BLK/WHT Letters | 100X25 | 1 |

2 NAMEPLATE SCHEDULE
PC-203 NO SCALE

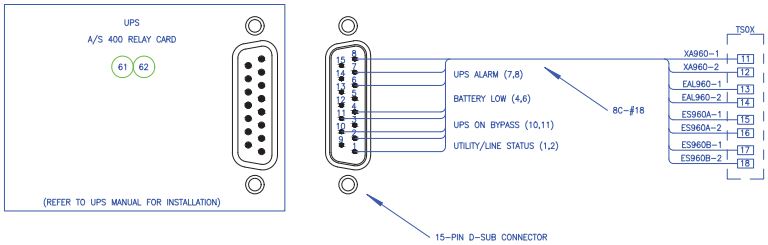


UPS ALARM STATUS WIRING DIAGRAM

3 UPS RELAY CARD
PC-203 NO SCALE

| | | | |
|---|---|---|---|
| Dessiné Par / Drawn By: O. Chalifoux-Lauzon | Projet / Project: WWTP Upgrade/CPL-901 | Client / Customer: City of Iqaluit | Entreprises L.M. inc. |
| Préparé Par / Prepared By: O. Chalifoux-Lauzon | ---- | ---- | 3006 Ste-Catherine est, Montréal, Québec, H1W 2B8 |
| Dernière maj / Last update: 19 mars 2019 | Dessin De / Drawing Of: Bill of materials | Page / de: 02 / 25 | Projet / Project: P103901 / xxxxxx |
| | | | Dessin N° / Drawing N°: WWTP IQALUIT CPL901_R00.DWG |

Tél: (514) 523-2831 / 1-800-265-2831, Fax: 514-521-2526

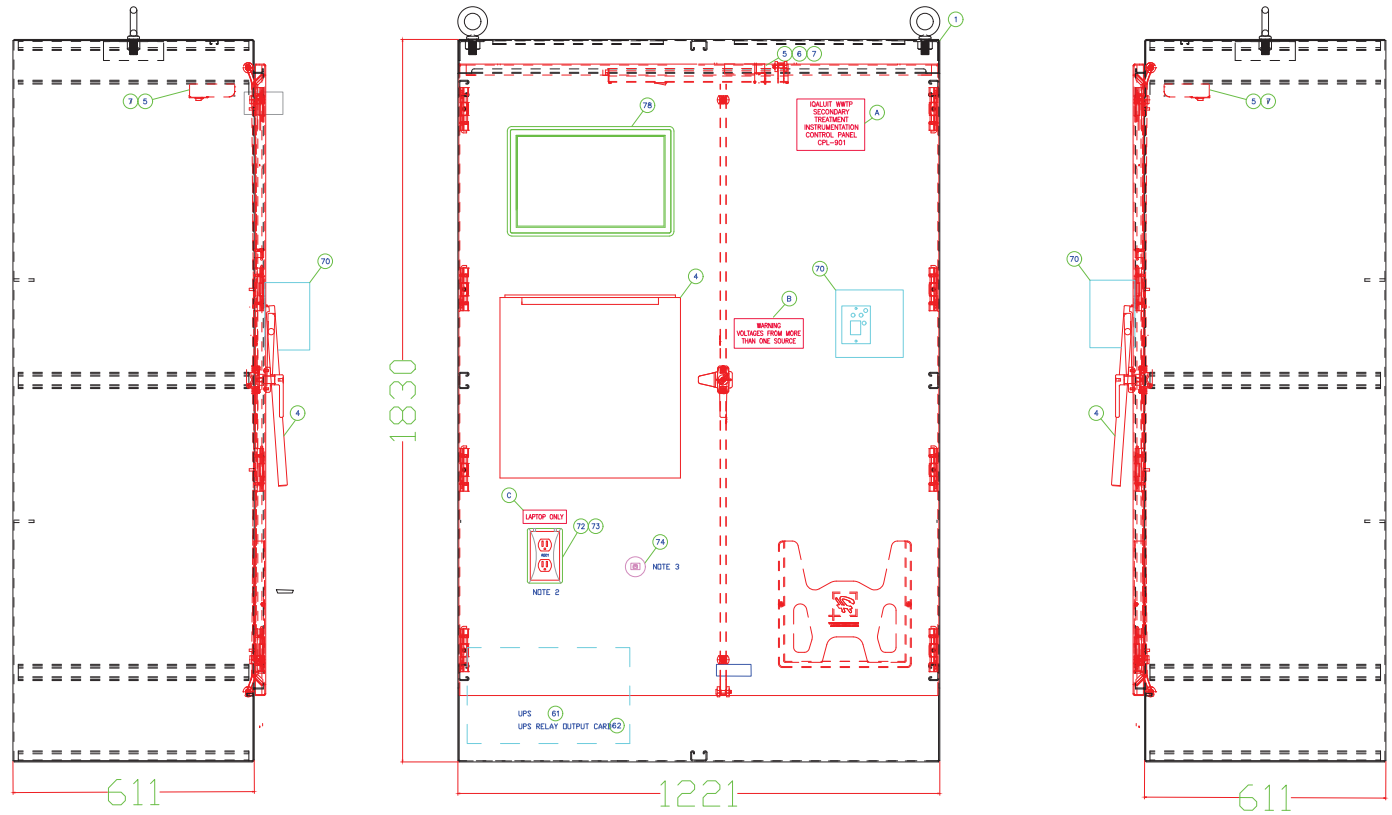


| | | | |
|---|---|---|---|
| Dessiné Par / Drawn By: O. Chalifoux-Lauzon | Projet / Project: WWTP Upgrade/CPL-901 | Client / Customer: City of Iqaluit | Entreprises L.M. inc |
| Préparé Par / Prepared By: O. Chalifoux-Lauzon | ---- | ---- | |
| | Dessin De / Drawing Of: Mechanical drawing | Page / de: 03 / 25 | Projet / Project: P103901 / xxxxxx |
| Dernière maj / Last update: 19 mars 2019 | | | Dessin N° / Drawing N°: WWTP IQALUIT CPL901_R00.DWG |

3006 Ste-Catherine est, Montréal, Québec, H1W 2B8
Tél: (514) 523-2831 / 1-800-265-2831, Fax: 514-521-2526

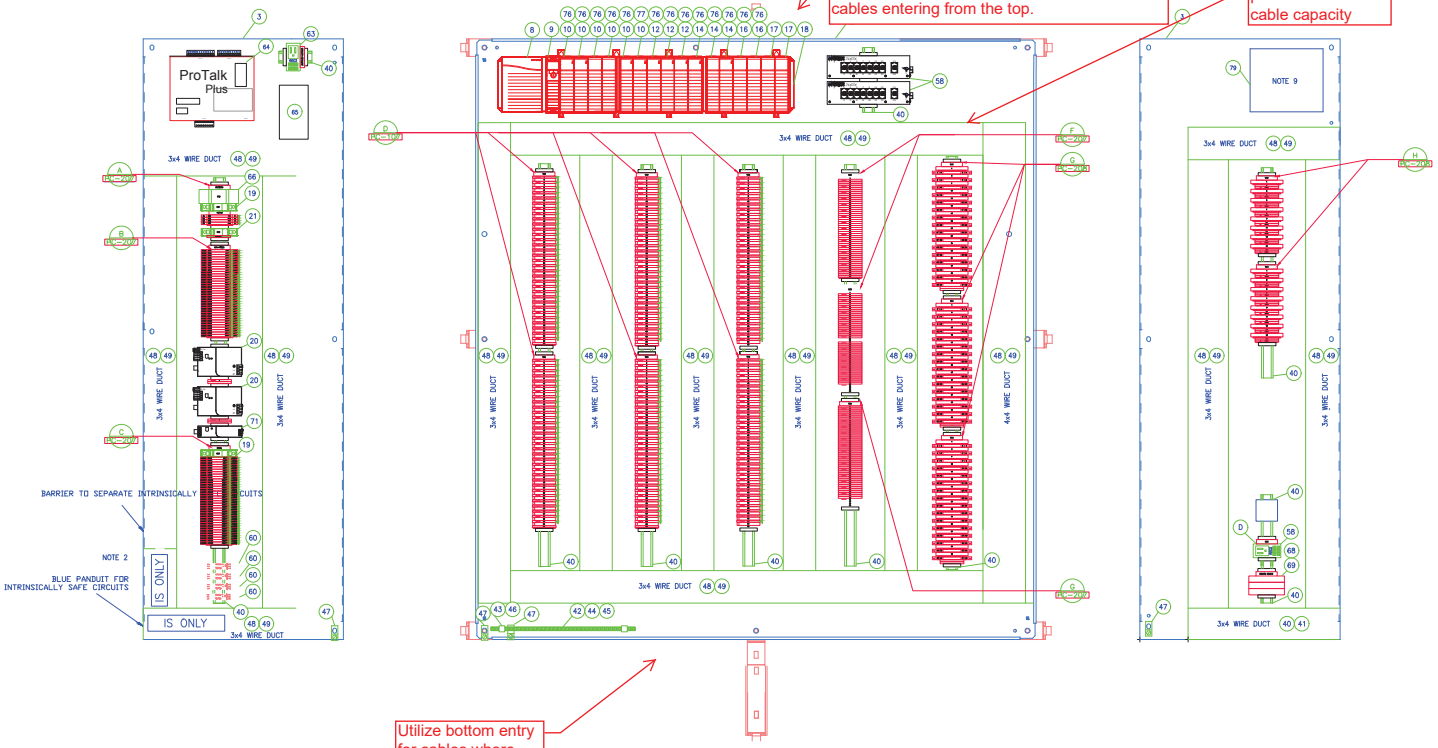


| | | | |
|---|---|---|---|
| Dessiné Par / Drawn By: O. Chalifoux-Lauzon | Projet / Project: WWTP Upgrade/CPL-901 | Client / Customer: City of Iqaluit | Entreprises L.M. inc |
| Préparé Par / Prepared By: O. Chalifoux-Lauzon | ---- | ---- | |
| Dernière maj / Last update: 19 mars 2019 | Dessin De / Drawing Of: Mechanical layout | Page / de: 04 / 25 | Projet / Project: P103901 / xxxxxx |
| | | | Dessin N° / Drawing N° : WWTP IQALUIT CPL901_R00.DWG |

3006 Ste-Catherine est, Montréal, Québec, H1W 2B8
Tél: (514) 523-2831 / 1-800-265-2831, Fax: 514-521-2526

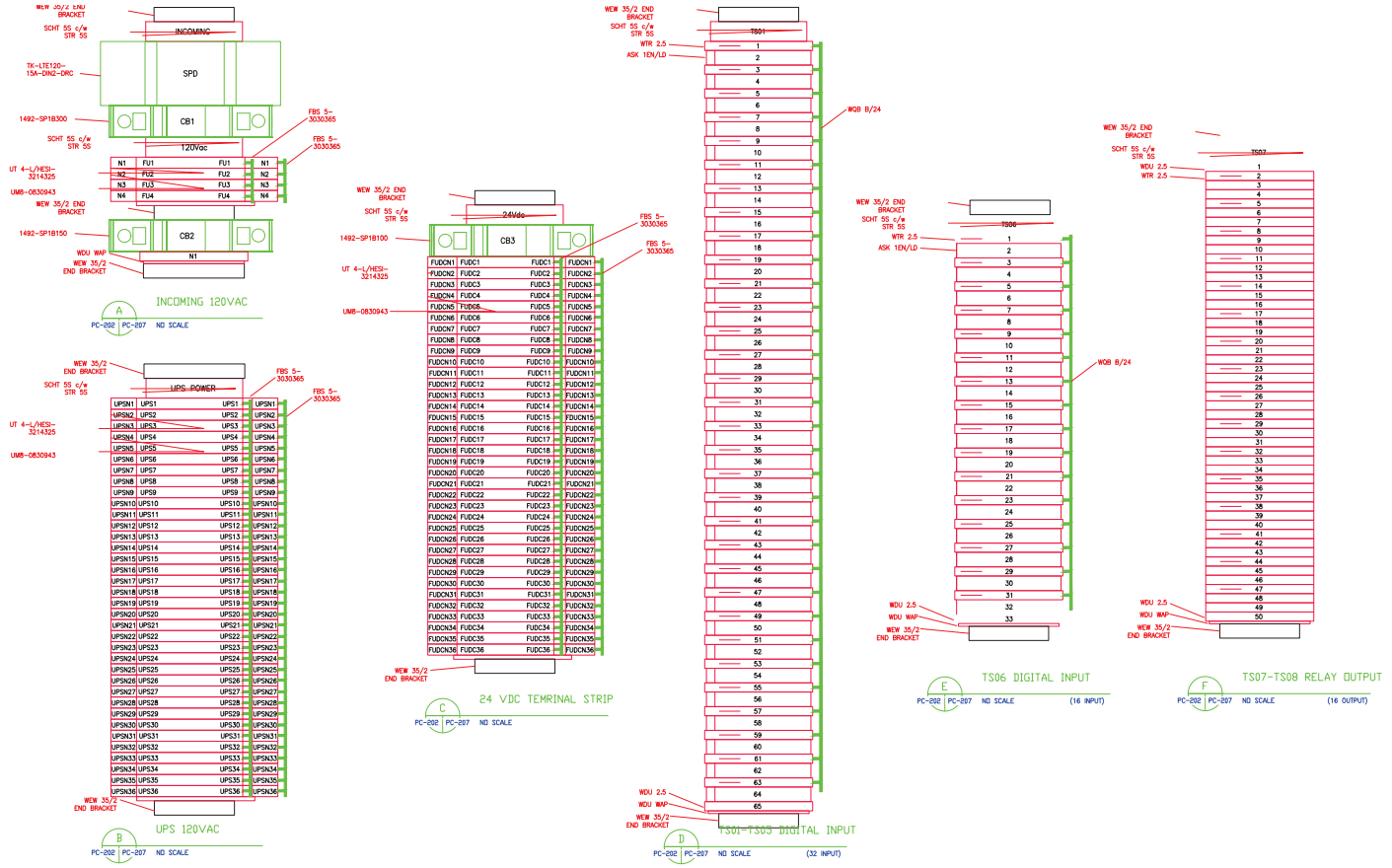


| | | | |
|---|---|---|---|
| Dessiné Par / Drawn By: O. Chalifoux-Lauzon | Projet / Project: WWTP Upgrade/CPL-901 | Client / Customer: City of Iqaluit | Entreprises L.M. inc. |
| Préparé Par / Prepared By: O. Chalifoux-Lauzon | ---- | ---- | 3006 Ste-Catherine est, Montréal, Québec, H1W 2B8 |
| Dernière maj / Last update: 19 mars 2019 | Dessin De / Drawing Of: Terminals (1/2) | Page / de: 05 / 25 | Projet / Project: P103901 / xxxxxx — Dessin N° / Drawing N° : WWTP IQALUIT CPL901_R00.DWG | Tél: (514) 523-2831 / 1-800-265-2831, Fax: 514-521-2526 |

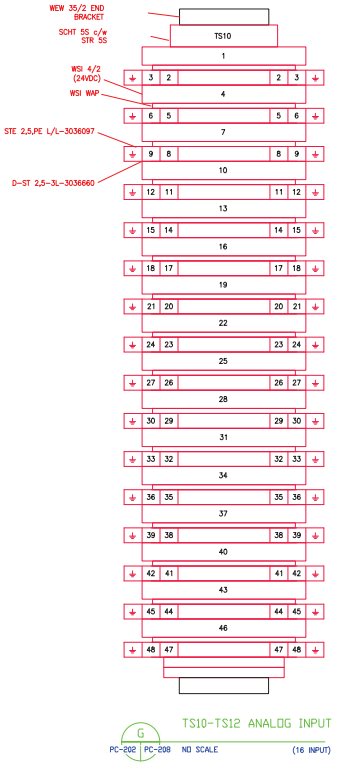


G

TS10-TS12 ANALOG INPUT

PC-202 | PC-208 NO SCALE (16 INPUT)

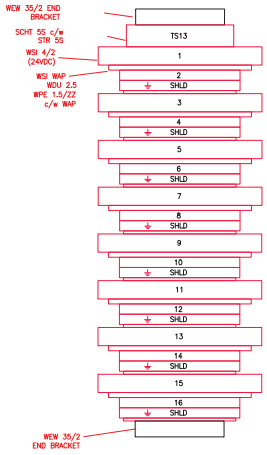


H

TS13-TS14 ANALOG OUTPUT

PC-202 | PC-208 NO SCALE (8 OUTPUT)

| | | | |
|---|---|---|---|
| Dessiné Par / Drawn By: O. Chalifoux-Lauzon | Projet / Project: WWTP Upgrade/CPL-901 | Client / Customer: City of Iqaluit | Entreprises L.M. inc. |
| Préparé Par / Prepared By: O. Chalifoux-Lauzon | ---- | ---- | |
| Dernière maj / Last update: 19 mars 2019 | Dessin De / Drawing Of: Terminals (2/2) — Page / de: 06 / 25 | Projet / Project: P103901 / xxxxxx — Dessin N° / Drawing N° : WWTP IQALUIT CPL901_R00.DWG | 3006 Ste-Catherine est, Montréal, Québec, H1W 2B8 Tél: (514) 523-2831 / 1-800-265-2831, Fax: 514-521-2526 |

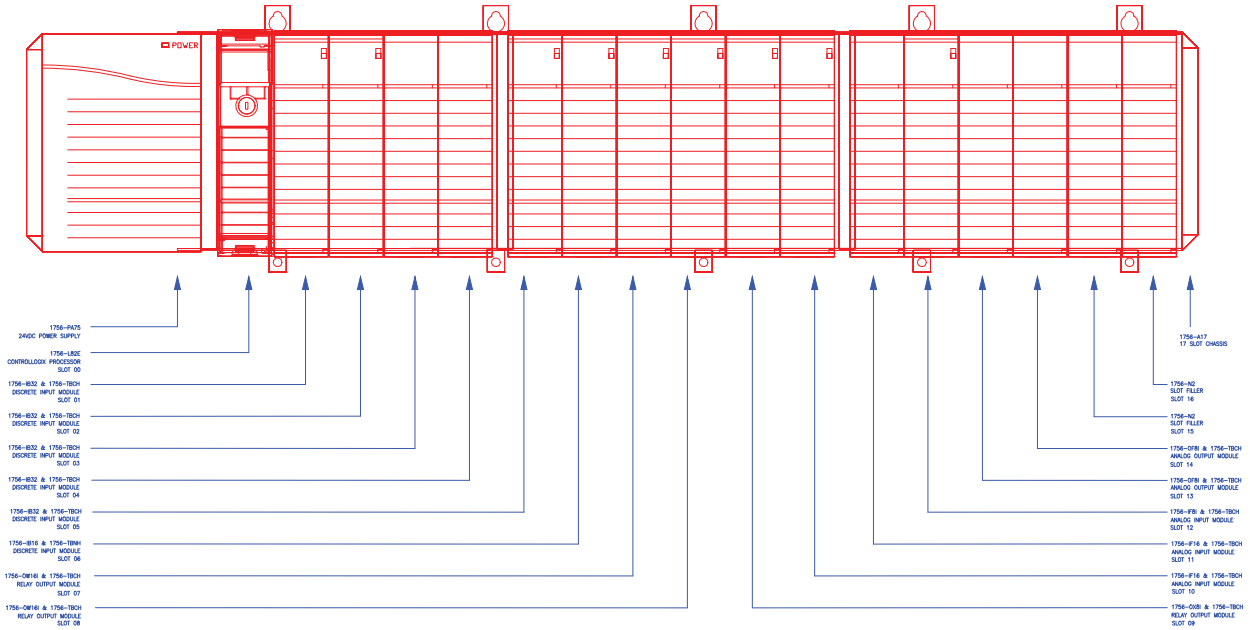


| | | | |
|---|---|---|---|
| Dessiné Par / Drawn By: O. Chalifoux-Lauzon | Projet / Project: WWTP Upgrade/CPL-901 ---- | Client / Customer: City of Iqaluit ---- | Entreprises L.M. inc. |
| Préparé Par / Prepared By: O. Chalifoux-Lauzon | | Projet / Project: P103901 / xxxxxx | 3006 Ste-Catherine est, Montréal, Québec, H1W 2B8 |
| Dernière maj / Last update: 19 mars 2019 | Dessin De / Drawing Of: PLC Rack | Page / de: 07 / 25 | Dessin N° / Drawing N°: WWTP IQALUIT CPL901_R00.DWG | Tél: (514) 523-2831 / 1-800-265-2831, Fax: 514-521-2526 |

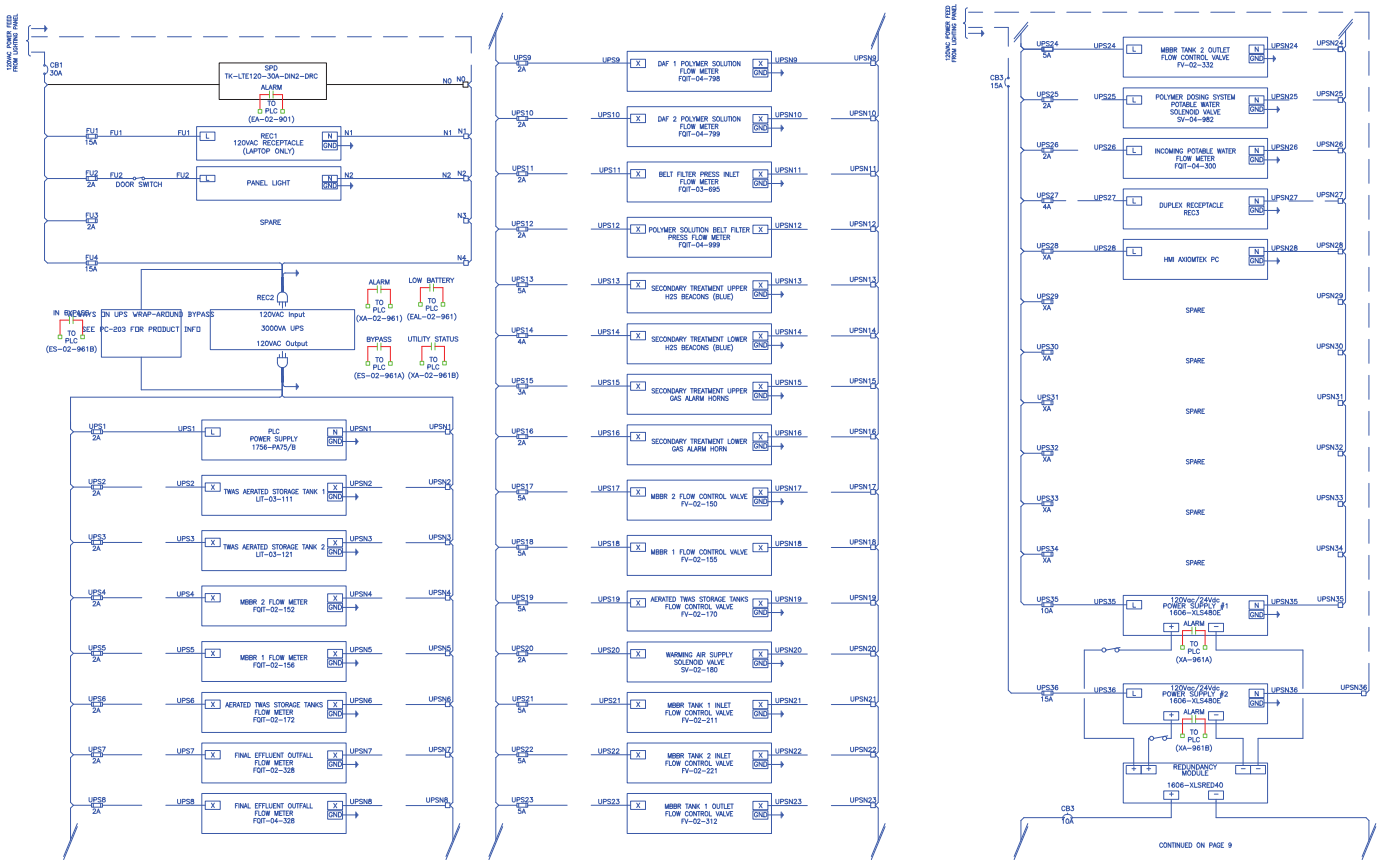


| | | | |
|---|---|---|---|
| Dessiné Par / Drawn By: O. Chalifoux-Lauzon | Projet / Project: WWTP Upgrade/CPL-901 | Client / Customer: City of Iqaluit | Entreprises L.M. inc. |
| Préparé Par / Prepared By: O. Chalifoux-Lauzon | ---- | ---- | 3006 Ste-Catherine est, Montréal, Québec, H1W 2B8 |
| Dernière maj / Last update: 19 mars 2019 | Dessin De / Drawing Of: Controls (1/2) | Page / de: 08 / 25 | Projet / Project: P103901 / xxxxxx |
| | | | Dessin N° / Drawing N°: WWTP IQALUIT CPL901_R00.DWG |

Tél: (514) 523-2831 / 1-800-265-2831, Fax: 514-521-2526

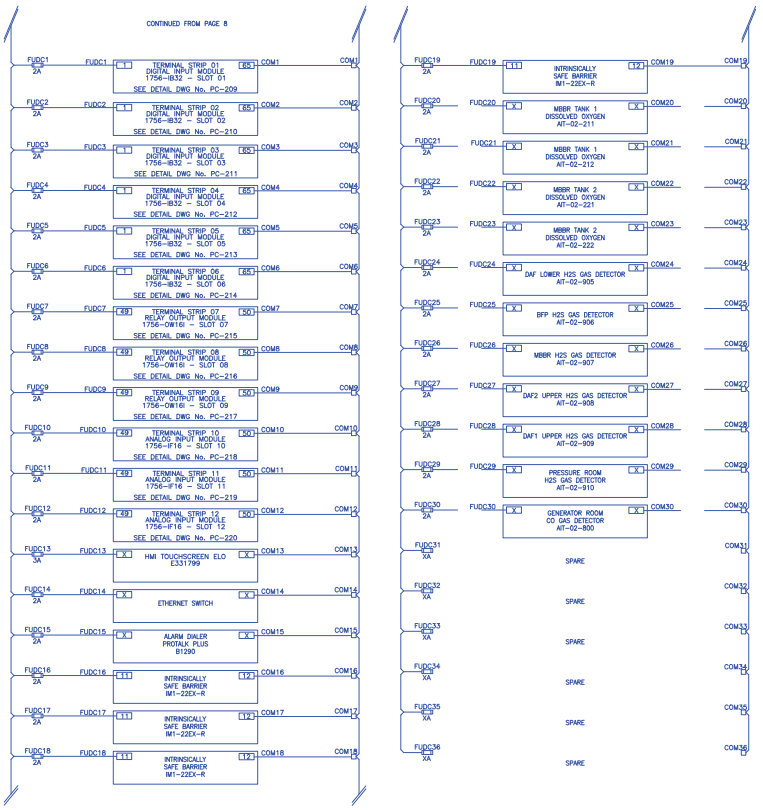


| ANTICIPATED DRAWS | | |
|---|---|---|
| SOURCE | CURRENT | POWER (W) |
| CB1 | 16A | 1920 |
| 120VAC UPS | 15A | 1800 |
| 24VDC POWER SUPPLY | 6.75A | 162 |

| | | | |
|---|---|---|---|
| Dessiné Par / Drawn By: O. Chalifoux-Lauzon | Projet / Project: WWTP Upgrade/CPL-901 | Client / Customer: City of Iqaluit | Entreprises L.M. inc. |
| Préparé Par / Prepared By: O. Chalifoux-Lauzon | ---- | ---- | |
| | Dessin De / Drawing Of: Controls (2/2) | Page / de: 09 / 25 | Projet / Project: P103901 / xxxxxx |
| Dernière maj / Last update: 19 mars 2019 | | | Dessin N° / Drawing N°: WWTP IQALUIT CPL901_R00.DWG |

3006 Ste-Catherine est, Montréal, Québec, H1W 2B8
Tél: (514) 523-2831 / 1-800-265-2831, Fax: 514-521-2526

| DESCRIPTION | PLC TAG | TS01 | | DC INPUT MODULE 1756-IB32 SLOT 01 |
|---|---|---|---|---|
| | | | FROM FUDC1 SEE DRAWING PAGE 9 | |
| PROCESS AERATION BLOWER INCOMING LOW PRESSURE ALARM | PAL-02-130 | 1 | FUDC1 | |
| | | 2 | | 1 I:01/00 |
| B-02-110 RUN STATUS | YI-02-110 | 3 | SD1/ | TS01- |
| | | 4 | | 2 I:01/01 |
| B-02-110 FAULT STATUS | XA-02-110 | 5 | SD1/ | TS01- |
| | | 6 | | 3 I:01/02 |
| B-02-110 AUTO STATUS | HI-02-110 | 7 | SD1/ | TS01- |
| | | 8 | | 4 I:01/03 |
| B-02-110 MOTOR FAULT | UA-02-110 | 9 | SD1/ | TS01- |
| | | 10 | | 5 I:01/04 |
| B-02-110 ESD TRIGGERED | HA-02-110 | 11 | SD1/ | TS01- |
| | | 12 | | 6 I:01/05 |
| F-02-115 RUN STATUS | YI-02-115 | 13 | SD1/ | TS01- |
| | | 14 | | 7 I:01/06 |
| F-02-115 FAULT STATUS | XA-02-115 | 15 | SD1/ | TS01- |
| | | 16 | | 8 I:01/07 |
| F-02-115 AUTO STATUS | HI-02-115 | 17 | SD1/ | TS01- |
| | | 18 | | 9 I:01/08 |
| PROCESS AERATION F-02-115 HIGH PRESSURE SWITCH | PSH-02-118 | 19 | SD1/ | TS01- |
| | | 20 | | 10 I:01/09 |
| PROCESS AERATION B-02-110 LOW PRESSURE SWITCH | PSL-02-108 | 21 | SD1/ | TS01- |
| | | 22 | | 11 I:01/10 |
| PROCESS AERATION B-02-110 HIGH TEMPERATURE SWITCH | TSH-02-180 | 23 | SD1/ | TS01- |
| | | 24 | | 12 I:01/11 |
| PROCESS AIR MBBR #2 FV-02-150 FAULT STATUS | XA-02-150 | 25 | SD1/ | TS01- |
| | | 26 | | 13 I:01/12 |
| PROCESS AIR MBBR #2 FV-02-150 AUTO STATUS | HI-02-150 | 27 | SD1/ | TS01- |
| | | 28 | | 14 I:01/13 |
| PROCESS AIR MBBR #2 FQIT-02-152 FLOW TOTALIZATION PULSE | FQI-02-152 | 29 | SD1/ | TS01- |
| | | 30 | | 15 I:01/14 |
| T-02-210 PRIMARY EFFLUENT KNIFE VALVE OPEN STATUS | ZSO-02-211 | 31 | SD1/ | TS01- |
| | | 32 | | 16 I:01/15 |
| | | | | 17 GND-0 |
| | | | | 18 GND-0 |
| T-02-210 PRIMARY EFFLUENT KNIFE VALVE CLOSED STATUS | ZSC-02-211 | 33 | SD1/ | TS01- |
| | | 34 | | 19 I:01/16 |
| T-02-210 PRIMARY EFFLUENT KNIFE VALVE OPEN STATUS | ZSO-02-221 | 35 | SD1/ | TS01- |
| | | 36 | | 20 I:01/17 |
| T-02-210 PRIMARY EFFLUENT KNIFE VALVE CLOSED STATUS | ZSC-02-221 | 37 | SD1/ | TS01- |
| | | 38 | | 21 I:01/18 |
| T-02-210 CELL 1-1 GAS ANALYZER FAULT STATUS | XA-02-211 | 39 | SD1/ | TS01- |
| | | 40 | | 22 I:01/19 |
| T-02-210 CELL 1-1 HIGH LEVEL SWITCH | LSH-02-213 | 41 | SD1/ | TS01- |
| | | 42 | | 23 I:01/20 |
| T-02-210 CELL 1-2 GAS ANALYZER FAULT STATUS | XA-02-212 | 43 | SD1/ | TS01- |
| | | 44 | | 24 I:01/21 |
| T-02-210 CELL 1-2 HIGH LEVEL SWITCH | LSH-02-214 | 45 | SD1/ | TS01- |
| | | 46 | | 25 I:01/22 |
| MBBR H2S GAS DETECTION FAULT STATUS | XA-02-909 | 47 | SD1/ | TS01- |
| | | 48 | | 26 I:01/23 |
| DAF #1 H2S GAS DETECTION FAULT STATUS | XA-02-907 | 49 | SD1/ | TS01- |
| | | 50 | | 27 I:01/24 |
| DAF #1 RUN STATUS | YI-02-310 | 51 | SD1/ | TS01- |
| | | 52 | | 28 I:01/25 |
| DAF #1 FAULT STATUS | XA-02-310 | 53 | SD1/ | TS01- |
| | | 54 | | 29 I:01/26 |
| P-04-770 RUN STATUS | YI-04-770 | 55 | SD1/ | TS01- |
| | | 56 | | 30 I:01/27 |
| P-04-770 FAULT STATUS | XA-04-770 | 57 | SD1/ | TS01- |
| | | 58 | | 31 I:01/28 |
| P-04-770 AUTO STATUS | HI-04-770 | 59 | SD1/ | TS01- |
| | | 60 | | 32 I:01/29 |
| P-04-770 MOTOR FAULT | UA-04-770 | 61 | SD1/ | TS01- |
| | | 62 | | 33 I:01/30 |
| P-04-770 ESD TRIGGERED | HA-04-770 | 63 | SD1/ | TS01- |
| | | 64 | | 34 I:01/31 |
| | | 65 | DC GND COM1 | TS01- 35 GND-1 |
| | | | FROM COM1 SEE DRAWING PAGE 9 | 36 GND-1 |



| | | | |
|---|---|---|---|
| Dessiné Par / Drawn By: O. Chalifoux-Lauzon | Projet / Project: WWTP Upgrade/CPL-901 ---- | Client / Customer: City of Iqaluit ---- | Entreprises L.M. inc. |
| Préparé Par / Prepared By: O. Chalifoux-Lauzon | | Projet / Project: P103901 / xxxxxx | 3006 Ste-Catherine est, Montréal, Québec, H1W 2B8 |
| Dernière maj / Last update: 19 mars 2019 | Dessin De / Drawing Of: IO | Page / de: 10 / 25 | Dessin N° / Drawing N°: WWTP IQALUIT CPL901_R00.DWG | Tél: (514) 523-2831 / 1-800-265-2831, Fax: 514-521-2526 |

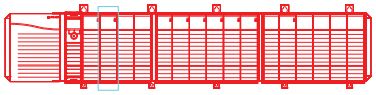

| DESCRIPTION | PLC TAG | TSO2 |
|---|---|---|
| B-02-120 RUN STATUS | YI-02-120 | 1 |
| B-02-120 FAULT STATUS | XA-02-120 | 2 |
| B-02-120 AUTO STATUS | HI-02-120 | 3 |
| B-02-120 MOTOR FAULT | UA-02-120 | 4 |
| B-02-120 ESD TRIGGERED | HA-02-120 | 5 |
| F-02-125 RUN STATUS | YI-02-125 | 6 |
| F-02-125 FAULT STATUS | XA-02-125 | 7 |
| F-02-125 AUTO STATUS | HI-02-125 | 8 |
| PROCESS AERATION F-02-125 HIGH PRESSURE SWITCH | PSH-02-128 | 9 |
| PROCESS AERATION B-02-120 LOW PRESSURE SWITCH | PSL-02-143 | 10 |
| PROCESS AERATION B-02-120 HIGH TEMPERATURE SWITCH | TSH-02-185 | 11 |
| PROCESS AIR MBBR #2 FV-02-155 FAULT STATUS | XA-02-155 | 12 |
| PROCESS AIR MBBR #2 FV-02-155 AUTO STATUS | HI-02-155 | 13 |
| PROCESS AIR MBBR #2 FQIT-02-156 FLOW TOTALIZATION PULSE | FQI-02-156 | 14 |
| T-02-220 CELL 2-1 GAS ANALYZER FAULT STATUS | XA-02-221 | 15 |
| T-02-220 CELL 2-1 HIGH LEVEL SWITCH | LSH-02-223 | 16 |
| T-02-220 CELL 2-2 GAS ANALYZER FAULT STATUS | XA-02-222 | 33 |
| T-02-220 CELL 2-2 HIGH LEVEL SWITCH | LSH-02-224 | 34 |
| DAF #2 H2S GAS DETECTION FAULT STATUS | XA-02-908 | 35 |
| DAF #2 RUN STATUS | YI-02-320 | 36 |
| DAF #2 FAULT STATUS | XA-02-320 | 37 |
| T-02-310 MIXED LIQOUR BFV OPEN STATUS | ZSO-02-312 | 38 |
| T-02-310 MIXED LIQOUR BFV CLOSED STATUS | ZSC-02-312 | 39 |
| T-02-310 DAF #1 HIGH LEVEL ALARM | LAH-02-330 | 40 |
| DAF #1 THICKENED WATER LOW LEVEL ALARM | LAL-02-333 | 41 |
| DAF #1 THICKENED WATER HIGH LEVEL ALARM | LAH-02-332 | 42 |
| FINAL EFFLUENT FQIT-02-328 FLOW TOTALIZATION PULSE | FQI-02-328 | 43 |
| P-04-780 RUN STATUS | YI-04-780 | 44 |
| P-04-780 FAULT STATUS | XA-04-780 | 45 |
| P-04-780 AUTO STATUS | HI-04-780 | 46 |
| P-04-780 MOTOR FAULT | UA-04-780 | 47 |
| P-04-780 ESD TRIGGERED | HA-04-780 | 48 |

FROM FUDC2
SEE DRAWING PAGE 9

FUDC2

SO2/

DC GND
COM2

FROM COM2
SEE DRAWING PAGE 9

DC INPUT MODULE
1756-IB32
SLOT 02

| | | |
|---|---|---|
| TO:02- | 1 | I:02/00 |
| TO:02- | 2 | I:02/01 |
| TO:02- | 3 | I:02/02 |
| TO:02- | 4 | I:02/03 |
| TO:02- | 5 | I:02/04 |
| TO:02- | 6 | I:02/05 |
| TO:02- | 7 | I:02/06 |
| TO:02- | 8 | I:02/07 |
| TO:02- | 9 | I:02/08 |
| TO:02- | 10 | I:02/09 |
| TO:02- | 11 | I:02/10 |
| TO:02- | 12 | I:02/11 |
| TO:02- | 13 | I:02/12 |
| TO:02- | 14 | I:02/13 |
| TO:02- | 15 | I:02/14 |
| TO:02- | 16 | I:02/15 |
| | 17 | GND-0 |
| | 18 | GND-0 |
| TO:02- | 19 | I:02/16 |
| TO:02- | 20 | I:02/17 |
| TO:02- | 21 | I:02/18 |
| TO:02- | 22 | I:02/19 |
| TO:02- | 23 | I:02/20 |
| TO:02- | 24 | I:02/21 |
| TO:02- | 25 | I:02/22 |
| TO:02- | 26 | I:02/23 |
| TO:02- | 27 | I:02/24 |
| TO:02- | 28 | I:02/25 |
| TO:02- | 29 | I:02/26 |
| TO:02- | 30 | I:02/27 |
| TO:02- | 31 | I:02/28 |
| TO:02- | 32 | I:02/29 |
| TO:02- | 33 | I:02/30 |
| TO:02- | 34 | I:02/31 |
| TO:02- | 35 | GND-1 |
| TO:02- | 36 | GND-1 |

| | | | |
|---|---|---|---|
| Dessiné Par / Drawn By: O. Chalifoux-Lauzon | Projet / Project: WWTP Upgrade/CPL-901 | Client / Customer: City of Iqaluit | Entreprises L.M. inc |
| Préparé Par / Prepared By: O. Chalifoux-Lauzon | ---- | ---- | 3006 Ste-Catherine est, Montréal, Québec, H1W 2B8 |
| Dernière maj / Last update: 19 mars 2019 | Dessin De / Drawing Of: IO | Page / de: 11 / 25 | Projet / Project: P103901 / xxxxxx |
| | | | Dessin N° / Drawing N°: WWTP IQALUIT CPL901_R00.DWG |
| | | | Tél: (514) 523-2831 / 1-800-265-2831, Fax: 514-521-2526 |

| DESCRIPTION | PLC TAG | TS03 | | DC INPUT MODULE 1756-IB32 SLOT 03 |
|---|---|---|---|---|
| | | | FROM FUDC3 SEE DRAWING PAGE 9 | |
| | | 1 | FUDC3 | |
| B-02-130 RUN STATUS | YI-02-130 | 2 | S03/ | TS03- 1 I:03/00 |
| B-02-130 FAULT STATUS | XA-02-130 | 3 | S03/ | TS03- 2 I:03/01 |
| | | 4 | | |
| B-02-130 AUTO STATUS | HI-02-130 | 5 | S03/ | TS03- 3 I:03/02 |
| | | 6 | | |
| B-02-130 MOTOR FAULT | UA-02-130 | 7 | S03/ | TS03- 4 I:03/03 |
| | | 8 | | |
| B-02-130 ESD TRIGGERED | HA-02-130 | 9 | S03/ | TS03- 5 I:03/04 |
| | | 10 | | |
| F-02-135 RUN STATUS | YI-02-135 | 11 | S03/ | TS03- 6 I:03/05 |
| | | 12 | | |
| F-02-135 FAULT STATUS | XA-02-135 | 13 | S03/ | TS03- 7 I:03/06 |
| | | 14 | | |
| F-02-135 AUTO STATUS | HI-02-135 | 15 | S03/ | TS03- 8 I:03/07 |
| | | 16 | | |
| PROCESS AERATION F-02-135 HIGH PRESSURE SWITCH | PSH-02-138 | 17 | S03/ | TS03- 9 I:03/08 |
| | | 18 | | |
| PROCESS AERATION B-02-130 LOW PRESSURE SWITCH | PSL-02-146 | 19 | S03/ | TS03- 10 I:03/09 |
| | | 20 | | |
| PROCESS AERATION B-02-130 HIGH TEMPERATURE SWITCH | TSH-02-190 | 21 | S03/ | TS03- 11 I:03/10 |
| | | 22 | | |
| PROCESS AIR MBBR #2 FV-02-170 FAULT STATUS | XA-02-170 | 23 | S03/ | TS03- 12 I:03/11 |
| | | 24 | | |
| PROCESS AIR MBBR #2 FV-02-170 AUTO STATUS | HI-02-170 | 25 | S03/ | TS03- 13 I:03/12 |
| | | 26 | | |
| PROCESS AIR MBBR #2 FQT-02-172 FLOW TOTALIZATION PULSE | FQI-02-172 | 27 | S03/ | TS03- 14 I:03/13 |
| | | 28 | | |
| T-02-320 MIXED LIQUOR BFV OPEN STATUS | ZSO-02-332 | 29 | S03/ | TS03- 15 I:03/14 |
| | | 30 | | |
| T-02-320 MIXED LIQUOR BFV CLOSED STATUS | ZSC-02-332 | 31 | S03/ | TS03- 16 I:03/15 |
| | | 32 | | |
| | | | | 17 GND-0 |
| | | | | 18 GND-0 |
| T-02-320 DAF #2 HIGH LEVEL ALARM | LAH-03-342 | 33 | S03/ | TS03- 19 I:03/16 |
| | | 34 | | |
| DAF #2 THICKENED WATER LOW LEVEL ALARM | LAL-02-343 | 35 | S03/ | TS03- 20 I:03/17 |
| | | 36 | | |
| DAF #2 THICKENED WATER HIGH LEVEL ALARM | LAH-02-342 | 37 | S03/ | TS03- 21 I:03/18 |
| | | 38 | | |
| PDS-04-700 RUN STATUS | YI-04-700 | 39 | S03/ | TS03- 22 I:03/19 |
| | | 40 | | |
| PDS-04-700 FAULT STATUS | XA-04-700 | 41 | S03/ | TS03- 23 I:03/20 |
| | | 42 | | |
| PDS-04-700 HIGH LEVEL ALARM | LAH-04-700 | 43 | S03/ | TS03- 24 I:03/21 |
| | | 44 | | |
| PDS-04-700 LOW PRESSURE ALARM | PAL-04-700 | 45 | S03/ | TS03- 25 I:03/22 |
| | | 46 | | |
| PDS-04-700 ESD TRIGGERED | HA-04-700 | 47 | S03/ | TS03- 26 I:03/23 |
| | | 48 | | |
| AIT-03-910 H2S GAS DETECTOR FAULT STATUS | XA-03-910 | 49 | S03/ | TS03- 27 I:03/24 |
| | | 50 | | |
| DAF #1 POLYMER FLOW TOTALIZATION PULSE | FQI-04-798 | 51 | S03/ | TS03- 28 I:03/25 |
| | | 52 | | |
| DAF #2 POLYMER FLOW TOTALIZATION PULSE | FQI-04-799 | 53 | S03/ | TS03- 29 I:03/26 |
| | | 54 | | |
| P-04-790 RUN STATUS | YI-04-790 | 55 | S03/ | TS03- 30 I:03/27 |
| | | 56 | | |
| P-04-790 FAULT STATUS | XA-04-790 | 57 | S03/ | TS03- 31 I:03/28 |
| | | 58 | | |
| P-04-790 AUTO STATUS | HI-04-790 | 59 | S03/ | TS03- 32 I:03/29 |
| | | 60 | | |
| P-04-790 MOTOR FAULT | UA-04-790 | 61 | S03/ | TS03- 33 I:03/30 |
| | | 62 | | |
| P-04-790 ESD TRIGGERED | HA-04-790 | 63 | S03/ | TS03- 34 I:03/31 |
| | | 64 | DC GND | |
| | | 65 | COM3 | TS03- 35 GND-1 |
| | | | FROM COM3 SEE DRAWING PAGE 9 | 36 GND-1 |

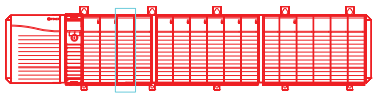

| | | | |
|---|---|---|---|
| Dessiné Par / Drawn By: O. Chalifoux-Lauzon | Projet / Project: WWTP Upgrade/CPL-901 ---- | Client / Customer: City of Iqaluit ---- | Entreprises L.M. inc. |
| Préparé Par / Prepared By: O. Chalifoux-Lauzon | | Projet / Project: P103901 / xxxxxx | 3006 Ste-Catherine est, Montréal, Québec, H1W 2B8 |
| Dernière maj / Last update: 19 mars 2019 | Dessin De / Drawing Of: IO | Page / de: 12 / 25 | Dessin N° / Drawing N°: WWTP IQALUIT CPL901_R00.DWG | Tél: (514) 523-2831 / 1-800-265-2831, Fax: 514-521-2526 |

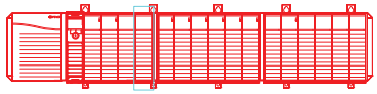

| DESCRIPTION | PLC TAG | TS04 | | DC INPUT MODULE 1756-IB32 SLOT 04 |
|---|---|---|---|---|
| | | FROM FUDC4 SEE DRAWING PAGE 9 | | |
| P-02-610 RUN STATUS | YI-02-610 | 1 | S04/ | I:04/00 |
| P-02-610 FAULT STATUS | XA-02-610 | 2 | S04/ | I:04/01 |
| P-02-610 AUTO STATUS | HI-02-610 | 3 | S04/ | I:04/02 |
| P-02-610 MOTOR FAULT | UA-02-610 | 4 | S04/ | I:04/03 |
| P-02-610 ESD TRIGGERED | HA-02-610 | 5 | S04/ | I:04/04 |
| TWAS PUMP #1 HIGH PRESSURE SWITCH | PAH-02-619 | 6 | S04/ | I:04/05 |
| T-03-630 TWAS AERATED TANK #1 LEVEL FAULT STATUS | XA-03-111 | 7 | S04/ | I:04/06 |
| T-03-630 TWAS AERATED TANK #1 HIGH HIGH LEVEL | LAHH-03-112 | 8 | S04/ | I:04/07 |
| T-03-630 TWAS AERATED TANK #1 LOW LOW LEVEL | LALL-03-113 | 9 | S04/ | I:04/08 |
| P-03-630 RUN STATUS | YI-03-630 | 10 | S04/ | I:04/09 |
| P-03-630 FAULT STATUS | XA-03-630 | 11 | S04/ | I:04/10 |
| P-03-630 AUTO STATUS | HI-03-630 | 12 | S04/ | I:04/11 |
| P-03-630 MOTOR FAULT | UA-03-630 | 13 | S04/ | I:04/12 |
| P-03-630 ESD TRIGGERED | HA-03-630 | 14 | S04/ | I:04/13 |
| BFP FEED PUMP #1 HIGH PRESSURE SWITCH | PAH-03-669 | 15 | S04/ | I:04/14 |
| BFP-03-650 FQIT-03-695 INLET FLOW TOTALIZATION PULSE | FQI-03-695 | 16 | S04/ | I:04/15 |
| | | 17 | | GND-0 |
| | | 18 | | GND-0 |
| BFP-03-650 RUN STATUS | YI-03-650 | 19 | S04/ | I:04/16 |
| BFP-03-650 FAULT STATUS | XA-03-650 | 20 | S04/ | I:04/17 |
| BFP-03-650 ESD TRIGGERED | HA-03-650 | 21 | S04/ | I:04/18 |
| P-04-970 RUN STATUS | YI-04-970 | 22 | S04/ | I:04/19 |
| P-04-970 FAULT STATUS | XA-04-970 | 23 | S04/ | I:04/20 |
| P-04-970 AUTO STATUS | HI-04-970 | 24 | S04/ | I:04/21 |
| P-04-970 MOTOR FAULT | UA-04-970 | 25 | S04/ | I:04/22 |
| P-04-970 ESD TRIGGERED | HA-04-970 | 26 | S04/ | I:04/23 |
| P-04-970 HIGH PRESSURE SWITCH | PAH-04-987 | 27 | S04/ | I:04/24 |
| BFP POLYMER FQIT-04-999 FLOW TOTALIZATION PULSE | FQI-04-798 | 28 | S04/ | I:04/25 |
| INCOMING POTABLE WATER FLOW TOTALIZATION PULSE | FQI-04-300 | 29 | S04/ | I:04/26 |
| AIT-02-905 H2S GAS ANALYZER FAULT STATUS | XA-02-905 | 30 | S04/ | I:04/27 |
| AIT-03-906 H2S GAS ANALYZER FAULT STATUS | XA-03-906 | 31 | S04/ | I:04/28 |
| AIT-03-907 H2S GAS ANALYZER FAULT STATUS | XA-03-907 | 32 | S04/ | I:04/29 |
| AIT-03-908 H2S GAS ANALYZER FAULT STATUS | XA-03-908 | 33 | S04/ | I:04/30 |
| AIT-03-909 GAS ANALYZER FAULT STATUS | XA-03-909 | 34 | S04/ | I:04/31 |
| | | 35 | DC GND | GND-1 |
| | | 36 | COM4 | GND-1 |
| | | FROM COM4 SEE DRAWING PAGE 9 | | |

| | | | |
|---|---|---|---|
| Dessiné Par / Drawn By: O. Chalifoux-Lauzon | Projet / Project: WWTP Upgrade/CPL-901 ---- | Client / Customer: City of Iqaluit ---- | Entreprises L.M. inc |
| Projeté Par / Proposed By: O. Chalifoux-Lauzon | | Projet / Project: P103901 / xxxxxx | 3006 Ste-Catherine est, Montréal, Québec, H1W 2B8 |
| Dernière maj / Last update: 19 mars 2019 | Dessin De / Drawing Of: IO | Page / de: 13 / 25 | Dessin N° / Drawing N°: WWTP IQALUIT CPL901_R00.DWG | Tél: (514) 523-2831 / 1-800-265-2831, Fax: 514-521-2526 |

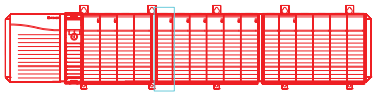

| DESCRIPTION | PLC TAG | TS05 | DC INPUT MODULE 1756-IB32 SLOT 05 |
|---|---|---|---|
| | | FROM FUDC5 SEE DRAWING PAGE 9 | |
| P-02-620 RUN STATUS | YI-02-620 | 1 FUDC5 S05/ | TS05- 1 t:05/00 |
| P-02-620 FAULT STATUS | XA-02-620 | 2 S05/ | TS05- 2 t:05/01 |
| P-02-620 AUTO STATUS | HI-02-620 | 3 S05/ | TS05- 3 t:05/02 |
| P-02-620 MOTOR FAULT | UA-02-620 | 4 S05/ | TS05- 4 t:05/03 |
| P-02-620 ESD TRIGGERED | HA-02-620 | 5 S05/ | TS05- 5 t:05/04 |
| TWAS PUMP #2 HIGH PRESSURE SWITCH | PAH-02-639 | 6 S05/ | TS05- 6 t:05/05 |
| T-03-640 TWAS AERATED TANK #2 LEVEL FAULT STATUS | XA-03-121 | 7 S05/ | TS05- 7 t:05/06 |
| T-03-640 TWAS AERATED TANK #2 HIGH HIGH LEVEL | LAHH-03-122 | 8 S05/ | TS05- 8 t:05/07 |
| T-03-640 TWAS AERATED TANK #2 LOW LOW LEVEL | LALL-03-123 | 9 S05/ | TS05- 9 t:05/08 |
| P-03-640 RUN STATUS | YI-03-640 | 10 S05/ | TS05- 10 t:05/09 |
| P-03-640 FAULT STATUS | XA-03-640 | 11 S05/ | TS05- 11 t:05/10 |
| P-03-640 AUTO STATUS | HI-03-640 | 12 S05/ | TS05- 12 t:05/11 |
| P-03-640 MOTOR FAULT | UA-03-640 | 13 S05/ | TS05- 13 t:05/12 |
| P-03-640 ESD TRIGGERED | HA-03-640 | 14 S05/ | TS05- 14 t:05/13 |
| BFP FEED PUMP #2 HIGH PRESSURE SWITCH | PAH-03-689 | 15 S05/ | TS05- 15 t:05/14 |
| PDS-04-900 RUN STATUS | YI-04-900 | 16 S05/ | TS05- 16 t:05/15 |
| | | | 17 GND-0 |
| | | | 18 GND-0 |
| PDS-04-900 FAULT STATUS | XA-04-900 | 33 S05/ | TS05- 19 t:05/16 |
| PDS-04-900 LOW LEVEL ALARM | LAL-04-900 | 34 S05/ | TS05- 20 t:05/17 |
| PDS-04-900 ESD TRIGGERED | HA-04-900 | 35 S05/ | TS05- 21 t:05/18 |
| P-04-980 RUN STATUS | YI-04-980 | 36 S05/ | TS05- 22 t:05/19 |
| P-04-980 FAULT STATUS | XA-04-980 | 37 S05/ | TS05- 23 t:05/20 |
| P-04-980 AUTO STATUS | HI-04-980 | 38 S05/ | TS05- 24 t:05/21 |
| P-04-980 MOTOR FAULT | UA-04-980 | 39 S05/ | TS05- 25 t:05/22 |
| P-04-980 ESD TRIGGERED | HA-04-980 | 40 S05/ | TS05- 26 t:05/23 |
| P-04-980 HIGH PRESSURE SWITCH | PAH-04-987 | 41 S05/ | TS05- 27 t:05/24 |
| GENERATOR RUN STATUS | YI-02-800 | 42 S05/ | TS05- 28 t:05/25 |
| GENERATOR FAULT STATUS | XA-02-800A | 43 S05/ | TS05- 29 t:05/26 |
| GENERATOR AUTO STATUS | HI-02-800 | 44 S05/ | TS05- 30 t:05/27 |
| GENERATOR BATTERY CHARGER FAULT | XA-02-800B | 45 S05/ | TS05- 31 t:05/28 |
| GENERATOR BATTERY VOLTAGE LOW | EAL-02-800 | 46 S05/ | TS05- 32 t:05/29 |
| GENERATOR FUEL LEVEL LOW | LAL-02-800 | 47 S05/ | TS05- 33 t:05/30 |
| AIT-03-909 GAS ANALYZER FAULT STATUS | XA-03-909 | 48 S05/ | TS05- 34 t:05/31 |
| | | 49 DC GND | TS05- 35 GND-1 |
| | | 50 COM5 | TS05- 36 GND-1 |
| | | FROM COM5 SEE DRAWING PAGE 9 | |

| | | | |
|---|---|---|---|
| Dessiné Par / Drawn By: O. Chalifoux-Lauzon | Projet / Project: WWTP Upgrade/CPL-901 | Client / Customer: City of Iqaluit | Entreprises L.M. inc |
| Préparé Par / Prepared By: O. Chalifoux-Lauzon | ---- | ---- | 3006 Ste-Catherine est, Montréal, Québec, H1W 2B8 |
| Dernière maj / Last update: 19 mars 2019 | Dessin De / Drawing Of: IO | Page / de: 14 / 25 | Projet / Project: P103901 / xxxxxx |
| | | | Dessin N° / Drawing N°: WWTP IQALUIT CPL901_R00.DWG |
| | | | Tél: (514) 523-2831 / 1-800-265-2831, Fax: 514-521-2526 |

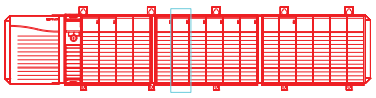

| DESCRIPTION | PLC TAG | TS06 | | DC INPUT MODULE 1756-IB32 SLOT 06 | |
|---|---|---|---|---|---|
| | | | FROM FUDC6 SEE DRAWING PAGE 9 | | |
| | | 1 | FUDC6 | | |
| UPS (CPL-901) FAULT STATUS | XA-02-961 | 2 | S06/ | 1 | I:06/00 |
| UPS (CPL-901) BATTERY LOW | EAL-02-961 | 3 | S06/ | 2 | I:06/01 |
| UPS (CPL-901) ON BYPASS | ES-02-961A | 4 | S06/ | 3 | I:06/02 |
| UPS (CPL-901) ON UTILITY | ES-02-961B | 5 | S06/ | 4 | I:06/03 |
| P-02-620 ESD TRIGGERED | HA-02-620 | 6 | S06/ | 5 | I:06/04 |
| DC POWER SUPPLY #1 (CPL-901) DC VOLTAGE FAULT INDICATION | XA-02-970 | 7 | S06/ | 6 | I:06/05 |
| DC POWER SUPPLY #2 (CPL-901) DC VOLTAGE FAULT INDICATION | XA-02-971 | 8 | S06/ | 7 | I:06/06 |
| CPL-901 SURGE PROTECTION DEVICE SURGE INDICATION | XA-02-900 | 9 | S06/ | 8 | I:06/07 |
| UPS BYPASS SWITCH (CPL-901) IN BYPASS MODE | ES-02-961 | 10 | S06/ | 9 | I:06/08 |
| PANEL A FEEDER BREAKER STATUS INDICATION | ES-02-810 | 11 | S06/ | 10 | I:06/09 |
| AUTOMATIC TRANSFER SWITCH UTILITY POWER AVAILABLE | EY-02-802A | 12 | S06/ | 11 | I:06/10 |
| AUTOMATIC TRANSFER SWITCH EMERGENCY POWER AVAILABLE | EY-02-802B | 13 | S06/ | 12 | I:06/11 |
| AUTOMATIC TRANSFER SWITCH ON UTILITY POWER | ES-02-802A | 14 | S06/ | 13 | I:06/12 |
| AUTOMATIC TRANSFER SWITCH ON EMERGENCY POWER | ES-02-802B | 15 | S06/ | 14 | I:06/13 |
| SPARE | – | 16 | S06/ | 15 | I:06/14 |
| SPARE | – | 17 | S06/ | 16 | I:06/15 |
| | | 18 | | 17 | GND-0 |
| | | 19 | | 18 | GND-0 |
| SPARE | – | 20 | S06/ | 19 | I:06/16 |
| SPARE | – | 21 | S06/ | 20 | I:06/17 |
| SPARE | – | 22 | S06/ | 21 | I:06/18 |
| SPARE | – | 23 | S06/ | 22 | I:06/19 |
| SPARE | – | 24 | S06/ | 23 | I:06/20 |
| SPARE | – | 25 | S06/ | 24 | I:06/21 |
| SPARE | – | 26 | S06/ | 25 | I:06/22 |
| SPARE | – | 27 | S06/ | 26 | I:06/23 |
| SPARE | – | 28 | S06/ | 27 | I:06/24 |
| SPARE | – | 29 | S06/ | 28 | I:06/25 |
| SPARE | – | 30 | S06/ | 29 | I:06/26 |
| SPARE | – | 31 | S06/ | 30 | I:06/27 |
| SPARE | – | 32 | S06/ | 31 | I:06/28 |
| SPARE | – | 33 | S06/ | 32 | I:06/29 |
| SPARE | – | 34 | S06/ | 33 | I:06/30 |
| SPARE | – | 35 | S06/ | 34 | I:05/31 |
| | | 36 | DC GND | 35 | GND-1 |
| | | 37 | COM6 | 36 | GND-1 |
| | | | FROM COM6 SEE DRAWING PAGE 9 | | |

| | | | |
|---|---|---|---|
| Dessiné Par / Drawn By: O. Chalifoux-Lauzon | Projet / Project: WWTP Upgrade/CPL-901 | Client / Customer: City of Iqaluit | Entreprises L.M. inc |
| Préparé Par / Prepared By: O. Chalifoux-Lauzon | ---- | ---- | 3006 Ste-Catherine est, Montréal, Québec, H1W 2B8 |
| Dernière maj / Last update: 19 mars 2019 | Dessin De / Drawing Of: IO | Page / de: 15 / 25 | Projet / Project: P103901 / xxxxxx |
| | | | Dessin N° / Drawing N°: WWTP IQALUIT CPL901_R00.DWG |

Tél: (514) 523-2831 / 1-800-265-2831, Fax: 514-521-2526

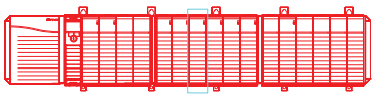

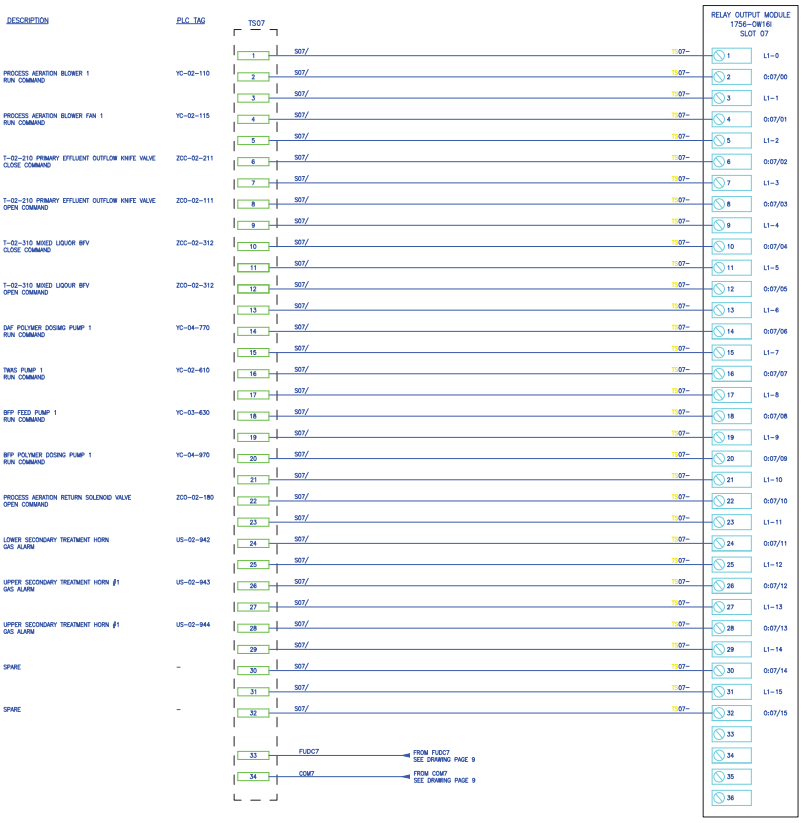


| | | | |
|---|---|---|---|
| Dessiné Par / Drawn By: O. Chalifoux-Lauzon | Projet / Project: WWTP Upgrade/CPL-901 | Client / Customer: City of Iqaluit | Entreprises L.M. inc |
| Préparé Par / Prepared By: O. Chalifoux-Lauzon | ---- | ---- | 3006 Ste-Catherine est, Montréal, Québec, H1W 2B8 |
| Dernière maj / Last update: 19 mars 2019 | Dessin De / Drawing Of: IO | Page / de: 16 / 25 | Projet / Project: P103901 / xxxxxx |
| | | | Dessin N° / Drawing N°: WWTP IQALUIT CPL901_R00.DWG |
| | | | Tél: (514) 523-2831 / 1-800-265-2831, Fax: 514-521-2526 |

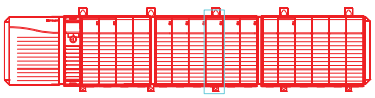

| DESCRIPTION | PLC TAG | TS08 | | RELAY OUTPUT MODULE 1756-OW16I SLOT 08 | |
|---|---|---|---|---|---|
| | | 1 | S08/ | 1 | L1-0 |
| PROCESS AERATION BLOWER 2 RUN COMMAND | YC-02-120 | 2 | S08/ | 2 | O:08/00 |
| | | 3 | S08/ | 3 | L1-1 |
| PROCESS AERATION BLOWER FAN 2 RUN COMMAND | YC-02-125 | 4 | S08/ | 4 | O:08/01 |
| | | 5 | S08/ | 5 | L1-2 |
| T-02-220 PRIMARY EFFLUENT OUTFLOW KNIFE VALVE CLOSE COMMAND | ZCC-02-221 | 6 | S08/ | 6 | O:08/02 |
| | | 7 | S08/ | 7 | L1-3 |
| T-02-220 PRIMARY EFFLUENT OUTFLOW KNIFE VALVE OPEN COMMAND | ZCO-02-221 | 8 | S08/ | 8 | O:08/03 |
| | | 9 | S08/ | 9 | L1-4 |
| T-02-320 MIXED LIQUOR BFV CLOSE COMMAND | ZCC-02-332 | 10 | S08/ | 10 | O:08/04 |
| | | 11 | S08/ | 11 | L1-5 |
| T-02-320 MIXED LIQUOR BFV OPEN COMMAND | ZCO-02-332 | 12 | S08/ | 12 | O:08/05 |
| | | 13 | S08/ | 13 | L1-6 |
| DAF POLYMER DOSING PUMP 2 RUN COMMAND | YC-04-780 | 14 | S08/ | 14 | O:08/06 |
| | | 15 | S08/ | 15 | L1-7 |
| TWAS PUMP 2 RUN COMMAND | YC-02-620 | 16 | S08/ | 16 | O:08/07 |
| | | 17 | S08/ | 17 | L1-8 |
| BFP FEED PUMP 2 RUN COMMAND | YC-03-640 | 18 | S08/ | 18 | O:08/08 |
| | | 19 | S08/ | 19 | L1-9 |
| BFP POLYMER DOSING PUMP 2 RUN COMMAND | YC-04-980 | 20 | S08/ | 20 | O:08/09 |
| | | 21 | S08/ | 21 | L1-10 |
| BFP POLYMER DOSING SOLENOID VALVE OPEN COMMAND | ZCO-04-970 | 22 | S08/ | 22 | O:08/10 |
| | | 23 | S08/ | 23 | L1-11 |
| PRIMARY EFFLUENT KNIFE VALVE OPEN COMMAND | ZCO-02-221 | 24 | S08/ | 24 | O:08/11 |
| | | 25 | S08/ | 25 | L1-12 |
| LOWER SECONDARY TREATMENT BEACONS H2S ALARM | US-02-922 | 26 | S08/ | 26 | O:08/12 |
| | | 27 | S08/ | 27 | L1-13 |
| UPPER SECONDARY TREATMENT BEACONS H2S ALARM | US-02-923 | 28 | S08/ | 28 | O:08/13 |
| | | 29 | S08/ | 29 | L1-14 |
| SPARE | - | 30 | S08/ | 30 | O:08/14 |
| | | 31 | S08/ | 31 | L1-15 |
| SPARE | - | 32 | S08/ | 32 | O:08/15 |
| | | 33 | FUDCB | 33 | |
| | | 34 | COMB | 34 | |
| | | | | 35 | |
| | | | | 36 | |

FROM FUDCB SEE DRAWING PAGE 9

FROM COMB SEE DRAWING PAGE 9

| | | | |
|---|---|---|---|
| Dessiné Par / Drawn By: O. Chalifoux-Lauzon | Projet / Project: WWTP Upgrade/CPL-901 | Client / Customer: City of Iqaluit | Entreprises L.M. inc |
| Préparé Par / Prepared By: O. Chalifoux-Lauzon | ---- | ---- | |
| | | Projet / Project: P103901 / xxxxxx | |
| Dernière maj / Last update: 19 mars 2019 | Dessin De / Drawing Of: IO | Page / de: 17 / 25 | Dessin N° / Drawing N°: WWTP IQALUIT CPL901_R00.DWG |

3006 Ste-Catherine est, Montréal, Québec, H1W 2B8
Tél: (514) 523-2831 / 1-800-265-2831, Fax: 514-521-2526

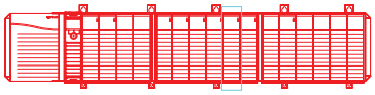

| DESCRIPTION | PLC TAG | TS09 | | RELAY OUTPUT MODULE 1756-OW16I SLOT 09 | |
|---|---|---|---|---|---|
| | | 1 | S09/ | 1 | L1-0 |
| PROCESS AERATION BLOWER 3 RUN COMMAND | YC-02-130 | 2 | S09/ | 2 | O:09/00 |
| | | 3 | S09/ | 3 | L1-1 |
| PROCESS AERATION BLOWER FAN 3 RUN COMMAND | YC-02-135 | 4 | S09/ | 4 | O:09/01 |
| | | 5 | S09/ | 5 | L1-2 |
| DAF POLYMER DOSING PUMP 3 CLOSE COMMAND | YC-04-790 | 6 | S09/ | 6 | O:09/02 |
| | | 7 | S09/ | 7 | L1-3 |
| ALARM DIALER ALARM #1 | XY-02-090 | 8 | S09/ | 8 | O:09/03 |
| | | 9 | S09/ | 9 | L1-4 |
| ALARM DIALER ALARM #2 | XY-02-091 | 10 | S09/ | 10 | O:09/04 |
| | | 11 | S09/ | 11 | L1-5 |
| ALARM DIALER ALARM #3 | XY-02-092 | 12 | S09/ | 12 | O:09/05 |
| | | 13 | S09/ | 13 | L1-6 |
| ALARM DIALER ALARM #4 | XY-02-093 | 14 | S09/ | 14 | O:09/06 |
| | | 15 | S09/ | 15 | L1-7 |
| SPARE | - | 16 | S09/ | 16 | O:09/07 |
| | | 17 | S09/ | 17 | L1-8 |
| SPARE | - | 18 | S09/ | 18 | O:09/08 |
| | | 19 | S09/ | 19 | L1-9 |
| SPARE | - | 20 | S09/ | 20 | O:09/09 |
| | | 21 | S09/ | 21 | L1-10 |
| SPARE | - | 22 | S09/ | 22 | O:09/10 |
| | | 23 | S09/ | 23 | L1-11 |
| SPARE | - | 24 | S09/ | 24 | O:09/11 |
| | | 25 | S09/ | 25 | L1-12 |
| SPARE | - | 26 | S09/ | 26 | O:09/12 |
| | | 27 | S09/ | 27 | L1-13 |
| SPARE | - | 28 | S09/ | 28 | O:09/13 |
| | | 29 | S09/ | 29 | L1-14 |
| SPARE | - | 30 | S09/ | 30 | O:09/14 |
| | | 31 | S09/ | 31 | L1-15 |
| SPARE | - | 32 | S09/ | 32 | O:09/15 |
| | | 33 | FUDC9 | FROM FUDC9 SEE DRAWING PAGE 9 | 33 |
| | | 34 | COM9 | FROM COM9 SEE DRAWING PAGE 9 | 34 |
| | | | | | 35 |
| | | | | | 36 |

| | | | |
|---|---|---|---|
| Dessiné Par / Drawn By: O. Chalifoux-Lauzon | Projet / Project: WWTP Upgrade/CPL-901 | Client / Customer: City of Iqaluit | Entreprises L.M. inc. |
| Préparé Par / Prepared By: O. Chalifoux-Lauzon | ---- | ---- | |
| | Dessin De / Drawing Of: IO | Page / de: 18 / 25 | Projet / Project: P103901 / xxxxxx |
| Dernière maj / Last update: 19 mars 2019 | | | Dessin N° / Drawing N°: WWTP IQALUIT CPL901_R00.DWG |

3006 Ste-Catherine est, Montréal, Québec, H1W 2B8
Tél: (514) 523-2831 / 1-800-265-2831, Fax: 514-521-2526

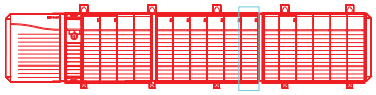

TYPICAL ACTIVE DEVICE
SIGNAL WIRING (0-4/20mA)




TYPICAL PASSIVE DEVICE
SIGNAL WIRING (0-4/20mA)

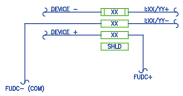


| DESCRIPTION | PLC TAG |
|---|---|
| PROCES AERATION BLOWER 1 SPEED INDICATION | SI-02-110 |
| PROCESS AIR MBBR 2 VALVE POSITION INDICATION | ZI-02-150 |
| PROCESS AIR DAF 2 POSITION INDICATION | ZI-02-155 |
| PROCESS AIR DAF 1 POSITION INDICATION | ZI-02-170 |
| PROCESS AERATION BLOWER OUTLET PRESSURE INDICATION | PI-02-195 |
| T-02-210 CELL 1-1 DISSOLVED OXYGEN INDICATION | AI-02-211 |
| T-02-210 CELL 1-2 DISSOLVED OXYGEN INDICATION | AI-02-212 |
| DAF POLYMER DOSING PUMP 1 SPEED INDICATION | SI-04-770 |
| TWAS PUMP 1 SPEED INDICATION | SI-02-610 |
| BFP FEED PUMP 1 SPEED INDICATION | SI-03-630 |
| TWAS TANK #1 T-03-630 LEVEL INDICATION | LI-03-111 |
| BFP-03-650 INLET FLOW INDICATION | FI-03-695 |
| BFP-04-900 POLYMER LEVEL INDICATION | LI-04-900 |
| BFP POLYMER DOSING PUMP 1 SPEED INDICATION | SI-04-970 |
| DAF 1 POLYMER OUTLET FLOW INDICATION | FI-04-799 |
| BFP POLYMER OUTLET FLOW INDICATION | FI-04-999 |

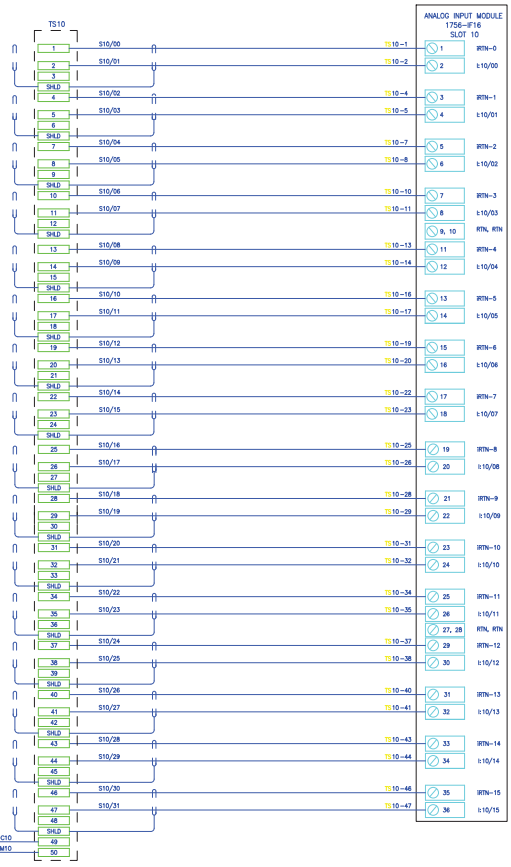


| | | | |
|---|---|---|---|
| Dessiné Par / Drawn By: O. Chalifoux-Lauzon<br>Préparé Par / Prepared By: O. Chalifoux-Lauzon<br>Dernière maj / Last update: 19 mars 2019 | Projet / Project: WWTP Upgrade/CPL-901<br>----<br>Dessin De / Drawing Of: IO<br>Page / de: 19 / 25 | Client / Customer: City of Iqaluit<br>----<br>Projet / Project: P103901 / xxxxxx<br>Dessin N° / Drawing N°: WWTP IQALUIT CPL901_R00.DWG | Entreprises L.M. inc<br>3006 Ste-Catherine est, Montréal, Québec, H1W 2B8<br>Tél: (514) 523-2831 / 1-800-265-2831, Fax: 514-521-2526 |

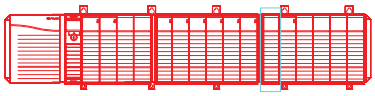

TYPICAL ACTIVE DEVICE
SIGNAL WIRING (0-4/20mA)




TYPICAL PASSIVE DEVICE
SIGNAL WIRING (0-4/20mA)




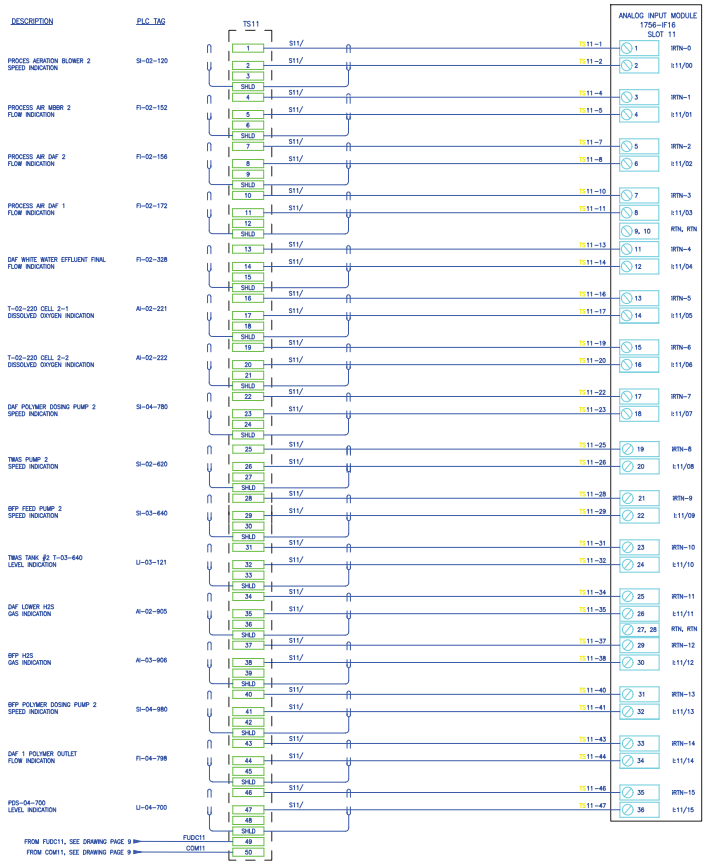


| | | | |
|---|---|---|---|
| Dessiné Par / Drawn By: O. Chalifoux-Lauzon | Projet / Project: WWTP Upgrade/CPL-901 | Client / Customer: City of Iqaluit | Entreprises L.M. inc. |
| Préparé Par / Prepared By: O. Chalifoux-Lauzon | ---- | ---- | |
| Dernière maj / Last update: 19 mars 2019 | Dessin De / Drawing Of: IO | Page / de: 20 / 25 | Projet / Project: P103901 / xxxxxx |
| | | | Dessin N° / Drawing N°: WWTP IQALUIT CPL901_R00.DWG |

3006 Ste-Catherine est, Montréal, Québec, H1W 2B8
Tél: (514) 523-2831 / 1-800-265-2831, Fax: 514-521-2526

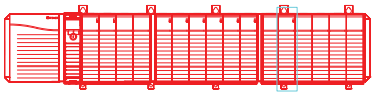

TYPICAL ACTIVE DEVICE
SIGNAL WIRING (0-4/20mA)




TYPICAL PASSIVE DEVICE
SIGNAL WIRING (0-4/20mA)

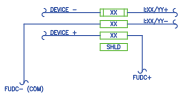


| DESCRIPTION | PLC TAG |
|---|---|
| PROCES AERATION BLOWER 3 SPEED INDICATION | SI-02-130 |
| MBBR H2S GAS INDICATION | AI-02-907 |
| DAF 2 H2S GAS INDICATION | AI-02-908 |
| DAF 1 H2S GAS INDICATION | AI-02-909 |
| BFP H2S GAS INDICATION | AI-02-910 |
| GENERATOR ROOM CO DETECTION | AI-02-801 |
| POTABLE WATER INLET FLOW INDICATION | FI-04-300 |
| DAF POLYMER DOSING PUMP 3 SPEED INDICATION | SI-04-790 |
| SPARE | – |
| SPARE | – |
| SPARE | – |
| SPARE | – |
| SPARE | – |
| SPARE | – |
| SPARE | – |
| SPARE | – |




| | | | |
|---|---|---|---|
| Dessiné Par / Drawn By: O. Chalifoux-Lauzon<br>Projeté Par / Prepared By: O. Chalifoux-Lauzon<br>Dernière maj / Last update: 19 mars 2019 | Projet / Project: WWTP Upgrade/CPL-901<br>----<br>Dessin De / Drawing Of: IO<br>Page / de: 21 / 25 | Client / Customer: City of Iqaluit<br>----<br>Projet / Project: P103901 / xxxxxx<br>Dessin N° / Drawing N°: WWTP IQALUIT CPL901_R00.DWG | Entreprises L.M. inc<br>3006 Ste-Catherine est, Montréal, Québec, H1W 2B8<br>Tél: (514) 523-2831 / 1-800-265-2831, Fax: 514-521-2526 |

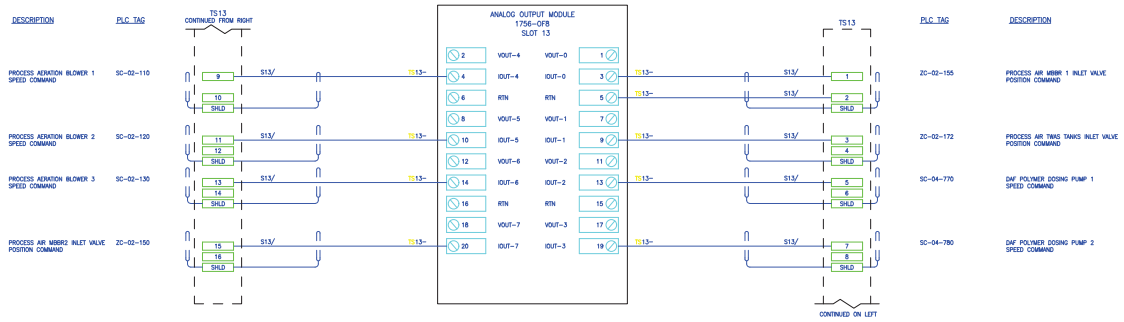


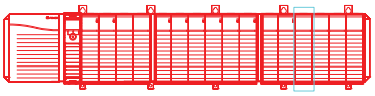

| | | | |
|---|---|---|---|
| Dessiné Par / Drawn By: O. Chalifoux-Lauzon<br>Préparé Par / Prepared By: O. Chalifoux-Lauzon<br>Dernière maj / Last update: 19 mars 2019 | Projet / Project: WWTP Upgrade/CPL-901<br>----<br>Dessin De / Drawing Of: IO<br>Page / de: 22 / 25 | Client / Customer: City of Iqaluit<br>----<br>Projet / Project: P103901 / xxxxxx<br>Dessin N° / Drawing N°: WWTP IQALUIT CPL901_R00.DWG | Entreprises L.M. inc<br>3006 Ste-Catherine est, Montréal, Québec, H1W 2B8<br>Tél: (514) 523-2831 / 1-800-265-2831, Fax: 514-521-2526 |

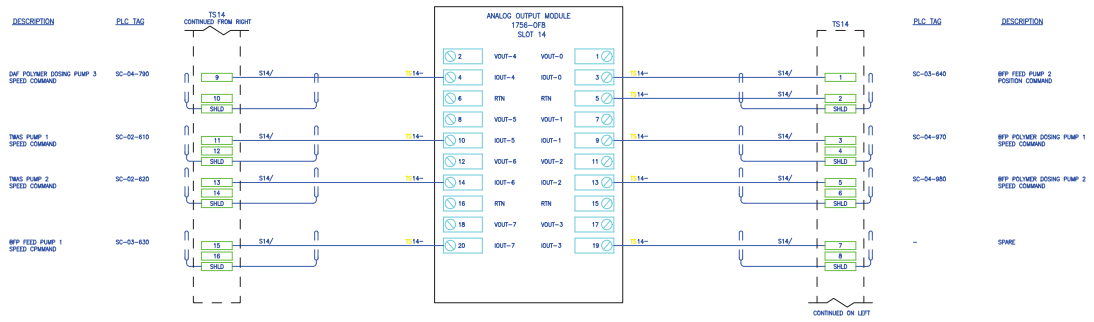


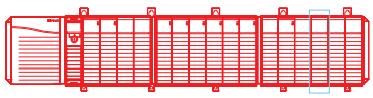

| | | | |
|---|---|---|---|
| Dessiné Par / Drawn By: O. Chalifoux-Lauzon | Projet / Project: WWTP Upgrade/CPL-901 ---- | Client / Customer: City of Iqaluit ---- | Entreprises L.M. inc. |
| Préparé Par / Prepared By: O. Chalifoux-Lauzon | | Projet / Project: P103901 / xxxxxx | 3006 Ste-Catherine est, Montréal, Québec, H1W 2B8 |
| Dernière maj / Last update: 19 mars 2019 | Dessin De / Drawing Of: IO | Page / de: 23 / 25 | Dessin N° / Drawing N°: WWTP IQALUIT CPL901_R00.DWG | Tél: (514) 523-2831 / 1-800-265-2831, Fax: 514-521-2526 |

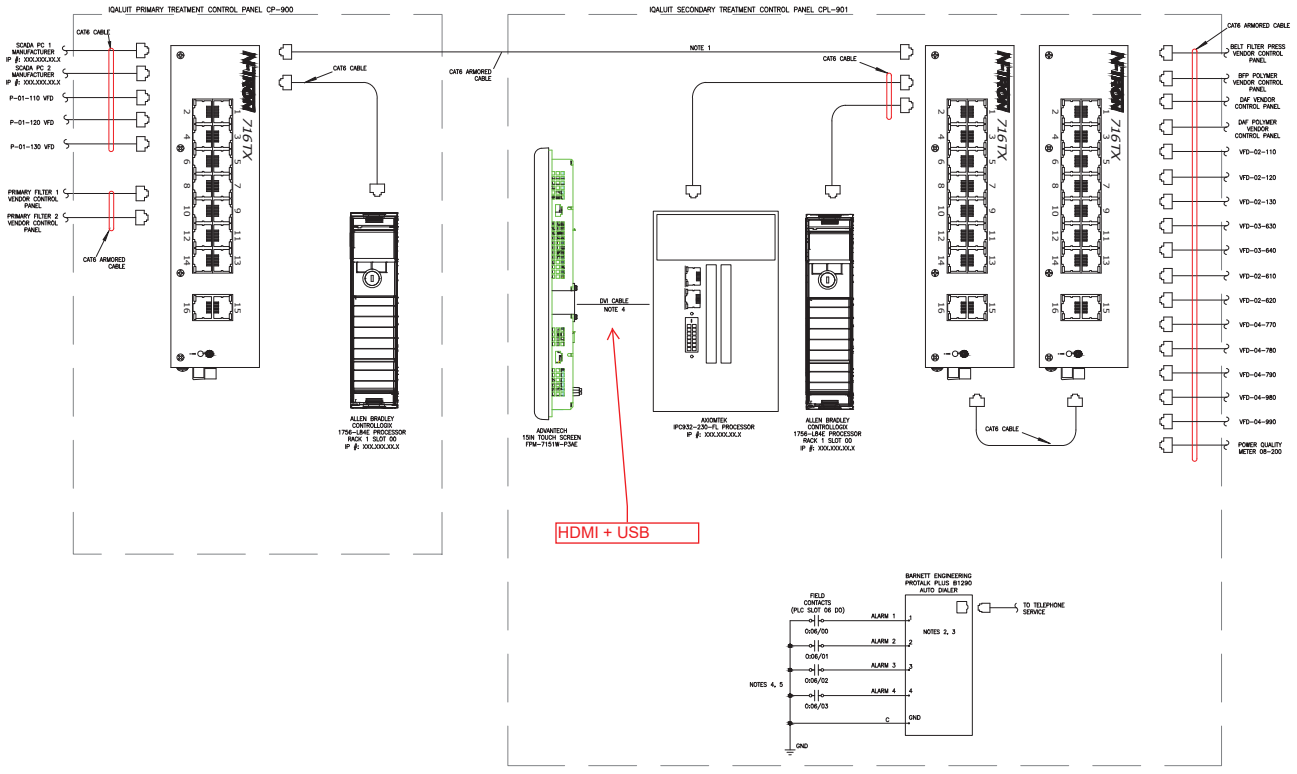


| | | | |
|---|---|---|---|
| Dessiné Par / Drawn By: O. Chalifoux-Lauzon | Projet / Project: WWTP Upgrade/CPL-901 | Client / Customer: City of Iqaluit | Entreprises L.M. inc. |
| Préparé Par / Prepared By: O. Chalifoux-Lauzon | ---- | ---- | 3006 Ste-Catherine est, Montréal, Québec, H1W 2B8 |
| Dernière maj / Last update: 19 mars 2019 | Dessin De / Drawing Of: Communication | Page / de: 24 / 25 | Projet / Project: P103901 / xxxxxx |
| | | | Dessin N° / Drawing N°: WWTP IQALUIT CPL901_R00.DWG |
| | | | Tél: (514) 523-2831 / 1-800-265-2831, Fax: 514-521-2526 |

| Dessiné Par / Drawn By: | Projet / Project: | Client / Customer: | |
|---|---|---|---|
| O. Chalifoux-Lauzon | WWTP Upgrade/CPL-901 | City of Iqaluit | Entreprises L.M. inc |
| Préparé Par / Prepared By: | ---- | ---- | |
| O. Chalifoux-Lauzon | | Projet / Project: P103901 / xxxxxx | 3006 Ste-Catherine est, Montréal, Québec, H1W 2B8 |
| Dernière maj / Last update: | Dessin De / Drawing Of: | Page / de: | Dessin N° / Drawing N°: |
| 19 mars 2019 | FREE | 25 / 25 | WWTP IQALUIT CPL901_R00.DWG |

Tél: (514) 523-2831 / 1-800-265-2831, Fax: 514-521-2526

REVIEWED BY CONTRACTOR

Kudlik Construction Ltd.

NAME: Sandra Rousseau P.Eng
DATE: Mai 13, 2019

NORCLAIR
MÉCANIQUE DE PROCÉDÉ

# SHOP DRAWINGS

## DA-MP-53 Belt filter press - LCP-03-650 as-built

**Date :** 2019-05-08

| **Information general** | |
|---|---|
| Project : **WWTP UPGRADE - IQALUIT** | |
| Client : Kudlik Construction Ltd.<br>To : Sandra Rousseau P.Eng., Project Manager | Project number : **2018-062**<br>E-mail : srousseau@kudlik.biz |
| Contractor : **Norclair inc.** | Project number Norclair : **P1039** |
| Address : 1100, Montée Masson, Laval, QC, Canada H7E 4P2 | |
| Project Manager : Hugo Chartier, Project Manager | E-mail: hchartier@norclair.ca |
| Phone : 450-688-4012 # 706 | Cell. : 514-703-0263 |

| **Information, subcontractor or supplier** | |
|---|---|
| Sub/supplier : Phoenix | |
| Contact : Jeremy Taylor | Phone : 502-499-6198 x181 |

| **Information on the equipment** | |
|---|---|
| Speciality : **Process** | |
| Equipment : Belt filter press | |
| Drawing reference : | |
| Specification reference : **46 76 21** | Division : |
| Article : | Number of pages : 11 |

**CONSULTANT APPROVAL**

SHOP DRAWINGS ARE REVIEWED UNLESS NOTED OTHERWISE

| | |
|---|---|
| REVIEWED AS MODIFIED | X |
| REVISE & RESUBMIT | |
| SEAL & SIGNATURE REQUIRED | |

Stantec

DATE May 31, 2019

SIGNATURE

REVIEW BY STANTEC IS FOR THE SOLE PURPOSE OF ASCERTAINING GENERAL CONFORMITY WITH DESIGN. CONTRACTOR IS RESPONSIBLE FOR DIMENSIONS, FABRICATION AND CONSTRUCTION METHODS, COORDINATION OF SUB-TRADES, DETAIL DESIGN OF COMPONENTS, AND ERRORS OR OMISSIONS ON SHOP DRAWINGS.

- Include CSA approvals in O&M manual submission

1100, montée Masson
Laval, QC, Canada
H7E 4P2

Phone. : 450-688-4012
Fax : 450-661-6341
E-Mail : info@norclair.ca
www.norclair.ca

# IQALUIT NUNAVUT WWTP
# LC1200LS BELT FILTER PRESS
# SSUCP-48-600 CONTROL PANEL
# ELECTRICAL & PNEUMATIC
# DESIGN DRAWINGS

DRAWING SHEET INDEX

| DRAWING # | DESCRIPTION | REVISION # |
|---|---|---|
| 0418377D800 | COVER SHEET / DRAWING INDEX | C |
| 0418377D801 | 600V/120V SCHEMATIC | 0 |
| 0418377D802 | 120VAC/24VDC SCHEMATIC | 0 |
| 0418377D803 | I/O SCHEMATIC | 0 |
| 0418377D804 | I/O SCHEMATIC | A |
| 0418377D805 | SPARE | 0 |
| 0418377D806 | SPARE | 0 |
| 0418377D807 | DEVICE SETUP PARAMETERS | A |
| 0418377D808 | SPARE | 0 |
| 0418377D809 | ENCLOSURE LAYOUT | C |
| 0418377D810 | TAG LAYOUT | 0 |
| 0418377D811 | PNEUMATIC SCHEMATIC | 0 |
| 0418377D812 | BILL OF MATERIALS | C |

| REV | DESCRIPTION | BY | DATE |
|---|---|---|---|
| C | 804, 807, 808, 812 | AMR | 5/8/18 |
| A | 809, 812 | AMR | 10/11/18 |

| | | | | | |
|---|---|---|---|---|---|
| FINAL AS BUILT | - | - | DRAWN AMR | ENGINEER AMR | APPROVED - |
| SHOP AS BUILT | - | - | SCALE N/A | FILE NO. 0418377 | DATE 9/21/18 |
| RELEASED FOR FABRICATION | AMR | 3/8/18 | | | |
| ISSUED FOR SUBMITTAL | - | - | | | |
| DRAWING STATUS | BY | DATE | | | |

PHOENIX
PHOENIX PROCESS EQUIPMENT CO.

TITLE SSUCP-48-600
COVER SHEET/DRAWING INDEX
FOR IQALUIT - WWTP
NUNAVUT
DWG.NO. 0418377D800
REV. C

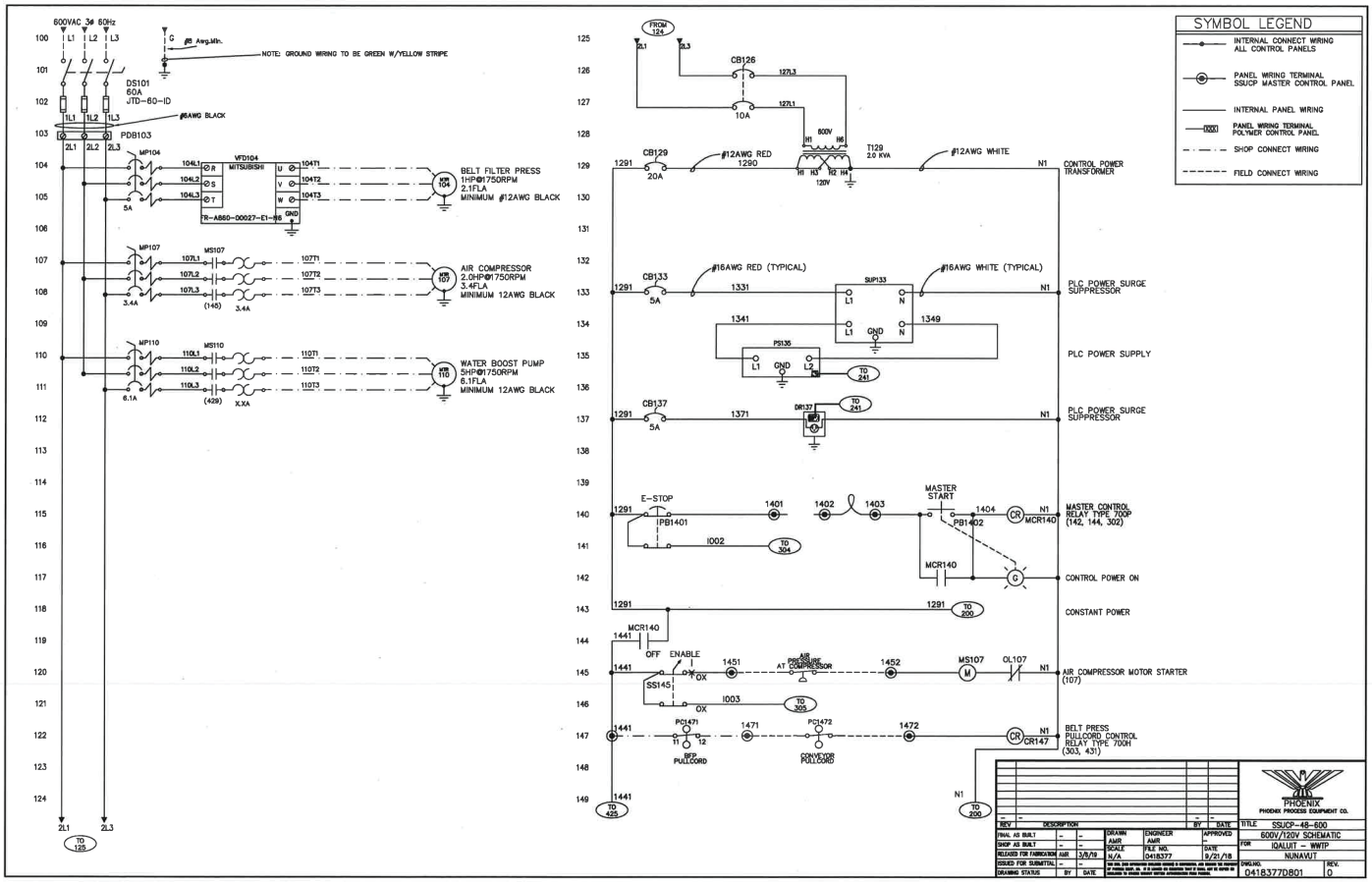
600VAC 3ø 60Hz
L1
L2
L3
G
#8 Awg.Min.
NOTE: GROUND WIRING TO BE GREEN W/YELLOW STRIPE
DS101
60A
JTD-60-ID
#6AWG BLACK
PDB103
2L1
2L2
2L3
MP104
104L1
104L2
104L3
5A
VFD104
MITSUBISHI
R
S
T
U
V
W
GND
TR-A860-00027-E1-H6
10471
10472
10473
BELT FILTER PRESS
1HP@1750RPM
2.1FLA
MINIMUM #12AWG BLACK
MP107
MS107
107L1
107L2
107L3
3.4A
(145)
3.4A
10771
10772
10773
AIR COMPRESSOR
2.0HP@1750RPM
3.4FLA
MINIMUM 12AWG BLACK
MP110
MS110
110L1
110L2
110L3
6.1A
(429)
X.XA
11071
11072
11073
WATER BOOST PUMP
5HP@1750RPM
6.1FLA
MINIMUM 12AWG BLACK
TO 125
FROM 124
CB126
127L3
10A
127L1
600V
H1
H6
H3
H2
H4
120V
T129
2.0 KVA
CB129
20A
#12AWG RED
1290
#12AWG WHITE
1291
N1
CONTROL POWER TRANSFORMER
CB133
5A
#16AWG RED (TYPICAL)
1331
SUP133
#16AWG WHITE (TYPICAL)
PLC POWER SURGE SUPPRESSOR
1341
1349
PS135
PLC POWER SUPPLY
TO 241
CB137
5A
1371
DR137
PLC POWER SURGE SUPPRESSOR
E-STOP
PB1401
1401
1002
TO 304
1402
1403
MASTER START
PB1402
1404
CR
MCR140
MASTER CONTROL RELAY TYPE 700P (142, 144, 302)
CONTROL POWER ON
CONSTANT POWER
TO 200
OFF ENABLE
SS145
OX
1451
AIR PRESSURE AT COMPRESSOR
1452
MS107
M
OL107
AIR COMPRESSOR MOTOR STARTER (107)
1003
TO 305
PC1471
PC1472
1471
1472
RFP PULLCORD
CONVEYOR PULLCORD
CR147
BELT PRESS PULLCORD CONTROL RELAY TYPE 700H (303, 431)
TO 425
SYMBOL LEGEND
INTERNAL CONNECT WIRING ALL CONTROL PANELS
PANEL WIRING TERMINAL SSUCP MASTER CONTROL PANEL
INTERNAL PANEL WIRING
PANEL WIRING TERMINAL POLYMER CONTROL PANEL
SHOP CONNECT WIRING
FIELD CONNECT WIRING
PHOENIX
PHOENIX PROCESS EQUIPMENT CO.
TITLE SSUCP-48-600
600V/120V SCHEMATIC
FOR IQALUIT - WWTP
NUNAVUT
DRAWING 041B377D801
REV 0
DRAWN AMR
ENGINEER AMR
APPROVED
SCALE N/A
FILE NO. 04185377
DATE 9/21/18
RELEASED FOR FABRICATION AMR 3/8/19
ISSUED FOR SUBMITTAL
DRAWING STATUS

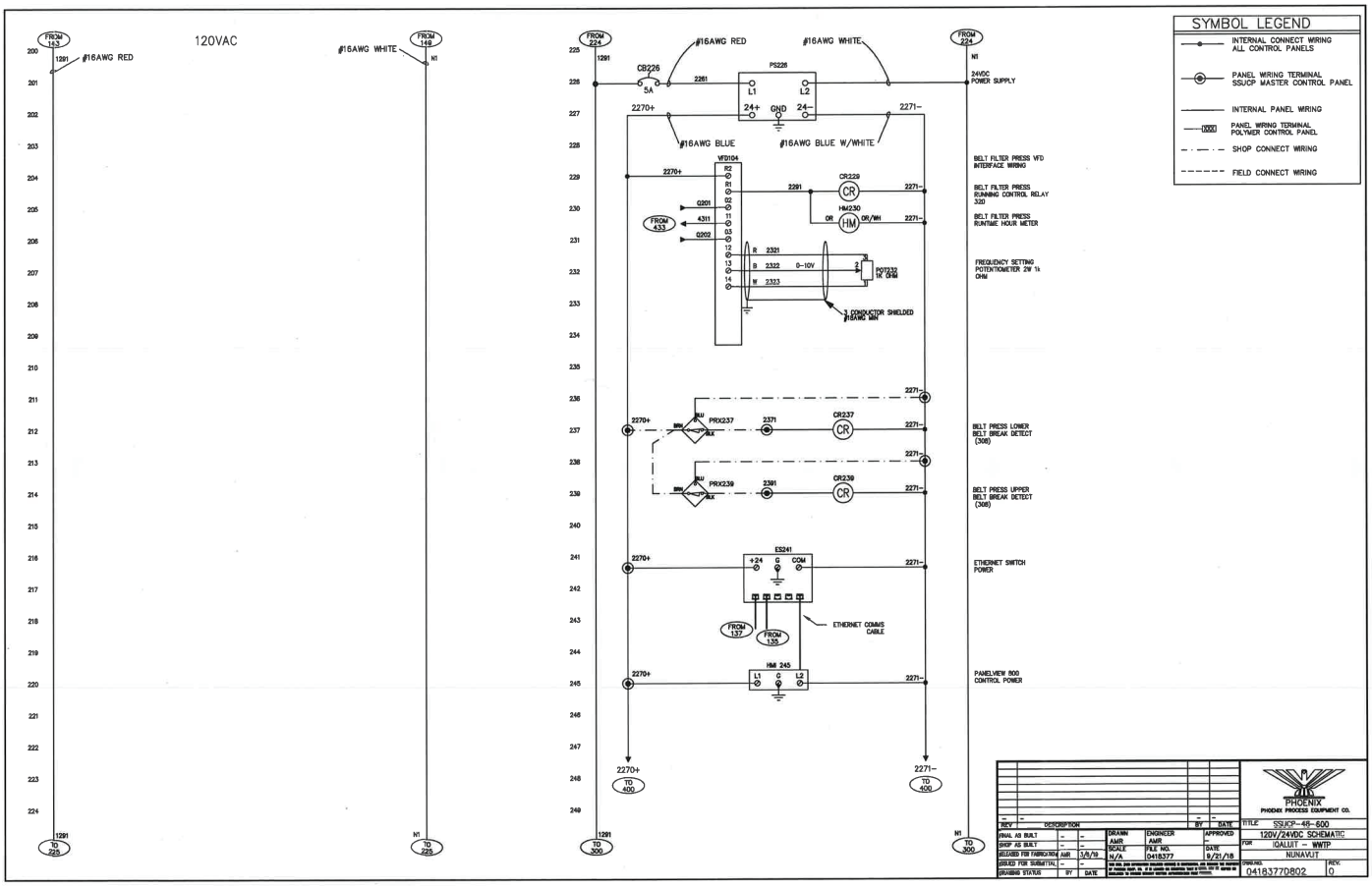
120VAC
#16AWG RED
#16AWG WHITE
#16AWG RED
#16AWG WHITE
#16AWG BLUE
#16AWG BLUE W/WHITE
CB226
5A
PS226
L1
L2
24+
GND
24-
24VDC POWER SUPPLY
VFD104
CR229
CR
HM230
HM
BELT FILTER PRESS VFD INTERFACE WIRING
BELT FILTER PRESS RUNNING CONTROL RELAY 320
BELT FILTER PRESS RUNTIME HOUR METER
FREQUENCY SETTING POTENTIOMETER 2W 1k OHM
3 CONDUCTOR SHIELDED #18AWG MIN
PRX237
CR237
BELT PRESS LOWER BELT BREAK DETECT (306)
PRX239
CR239
BELT PRESS UPPER BELT BREAK DETECT (306)
ES241
+24
G
COM
ETHERNET SWITCH POWER
ETHERNET COMMS CABLE
HMI 245
PANELVIEW 800 CONTROL POWER
SYMBOL LEGEND
INTERNAL CONNECT WIRING ALL CONTROL PANELS
PANEL WIRING TERMINAL SSUCP MASTER CONTROL PANEL
INTERNAL PANEL WIRING
PANEL WIRING TERMINAL POLYMER CONTROL PANEL
SHOP CONNECT WIRING
FIELD CONNECT WIRING
PHOENIX
PHOENIX PROCESS EQUIPMENT CO.
SSUCP-46-600
120V/24VDC SCHEMATIC
IQALUIT - WWTP
NUNAVUT
04183770802
0

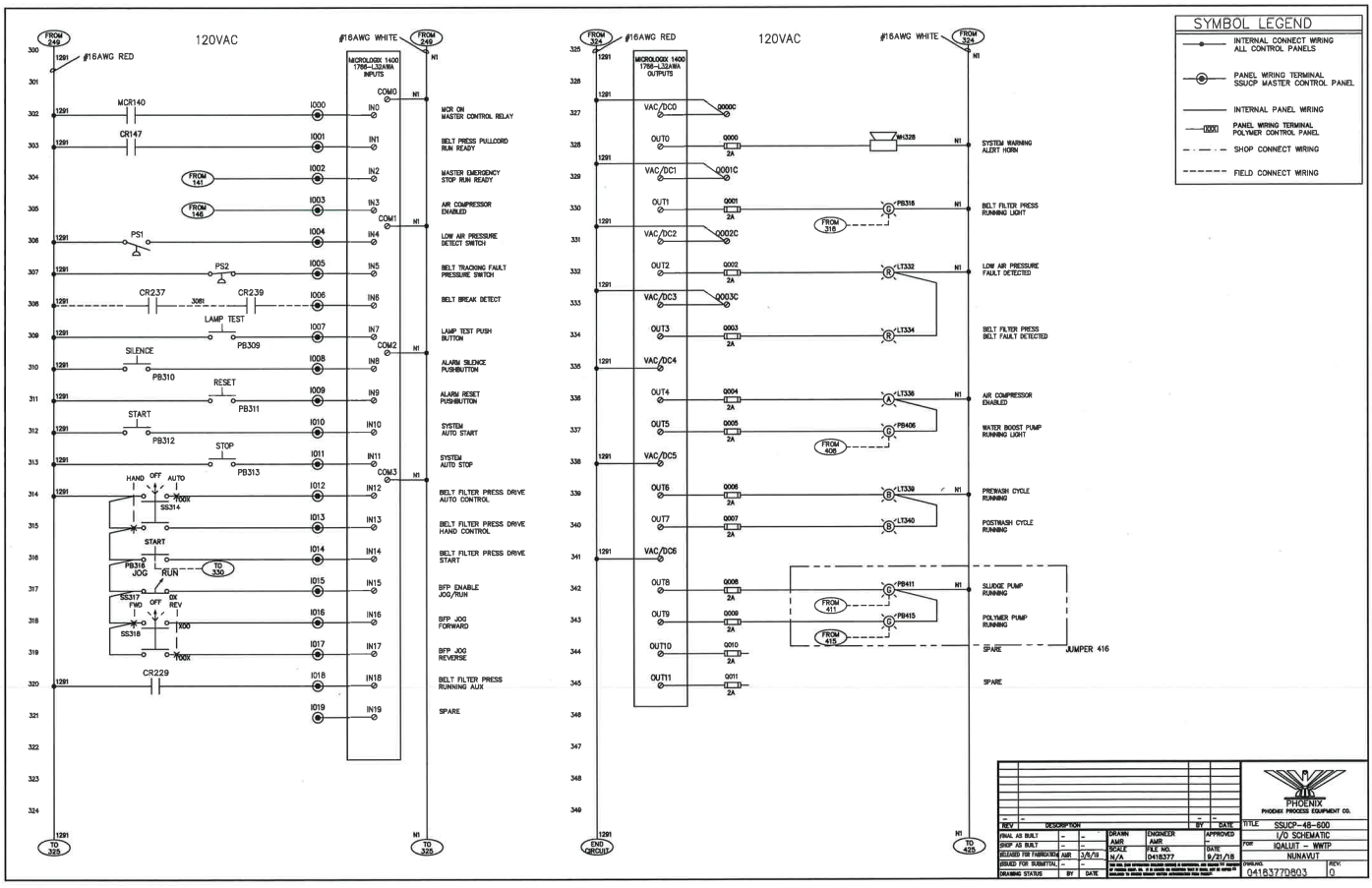
120VAC
#16AWG WHITE
#16AWG RED
MICROLOGIX 1400 1766-L32AWA INPUTS
MICROLOGIX 1400 1766-L32AWA OUTPUTS
MCR140
CR147
PS1
PS2
CR237
CR239
LAMP TEST
PB309
SILENCE
PB310
RESET
PB311
START
PB312
STOP
PB313
HAND OFF AUTO
SS314
PB316 JOG RUN
SS317 FWD OFF REV
SS318
CR229
MCR ON MASTER CONTROL RELAY
BELT PRESS PULLCORD RUN READY
MASTER EMERGENCY STOP RUN READY
AIR COMPRESSOR ENABLED
LOW AIR PRESSURE DETECT SWITCH
BELT TRACKING FAULT PRESSURE SWITCH
BELT BREAK DETECT
LAMP TEST PUSH BUTTON
ALARM SILENCE PUSHBUTTON
ALARM RESET PUSHBUTTON
SYSTEM AUTO START
SYSTEM AUTO STOP
BELT FILTER PRESS DRIVE AUTO CONTROL
BELT FILTER PRESS DRIVE HAND CONTROL
BELT FILTER PRESS DRIVE START
BFP ENABLE JOG/RUN
BFP JOG FORWARD
BFP JOG REVERSE
BELT FILTER PRESS RUNNING AUX
SPARE
SYSTEM WARNING ALERT HORN
BELT FILTER PRESS RUNNING LIGHT
LOW AIR PRESSURE FAULT DETECTED
BELT FILTER PRESS BELT FAULT DETECTED
AIR COMPRESSOR ENABLED
WATER BOOST PUMP RUNNING LIGHT
PREWASH CYCLE RUNNING
POSTWASH CYCLE RUNNING
SLUDGE PUMP RUNNING
POLYMER PUMP RUNNING
SPARE
JUMPER 416
SPARE
SYMBOL LEGEND
INTERNAL CONNECT WIRING ALL CONTROL PANELS
PANEL WIRING TERMINAL SSUCP MASTER CONTROL PANEL
INTERNAL PANEL WIRING
PANEL WIRING TERMINAL POLYMER CONTROL PANEL
SHOP CONNECT WIRING
FIELD CONNECT WIRING
PHOENIX PROCESS EQUIPMENT CO.
SSUCP-46-600
I/O SCHEMATIC
IQALUIT - WWTP
NUNAVUT
0416377D803

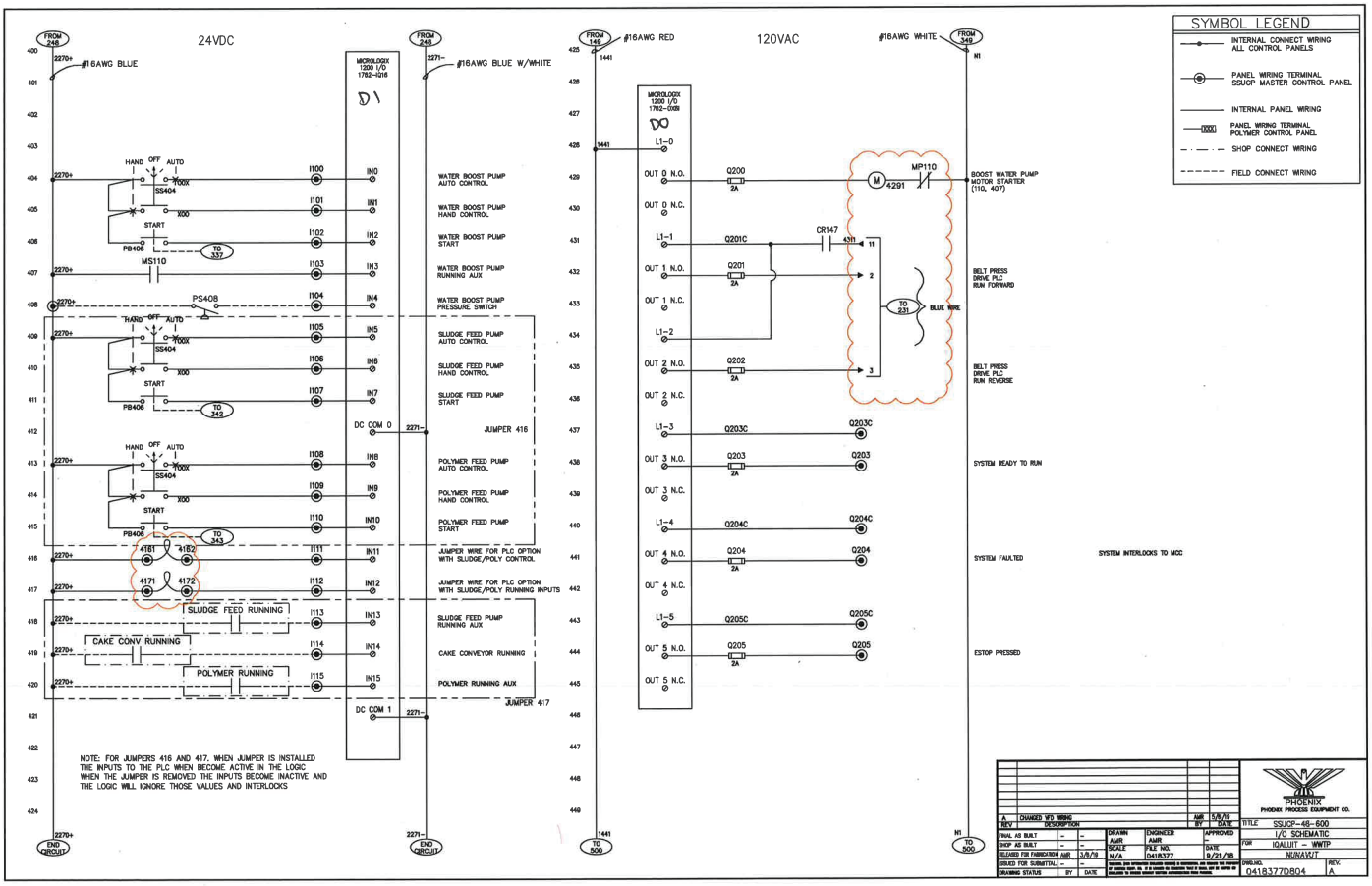
24VDC
120VAC
#16AWG BLUE
#16AWG BLUE W/WHITE
#16AWG RED
#16AWG WHITE
MICROLOGIX 1200 I/O 1762-IQ16
MICROLOGIX 1200 I/O 1762-OX8
D1
D0
WATER BOOST PUMP AUTO CONTROL
WATER BOOST PUMP HAND CONTROL
WATER BOOST PUMP START
WATER BOOST PUMP RUNNING AUX
WATER BOOST PUMP PRESSURE SWITCH
SLUDGE FEED PUMP AUTO CONTROL
SLUDGE FEED PUMP HAND CONTROL
SLUDGE FEED PUMP START
JUMPER 416
POLYMER FEED PUMP AUTO CONTROL
POLYMER FEED PUMP HAND CONTROL
POLYMER FEED PUMP START
JUMPER WIRE FOR PLC OPTION WITH SLUDGE/POLY CONTROL
JUMPER WIRE FOR PLC OPTION WITH SLUDGE/POLY RUNNING INPUTS
SLUDGE FEED PUMP RUNNING AUX
CAKE CONVEYOR RUNNING
POLYMER RUNNING AUX
JUMPER 417
SLUDGE FEED RUNNING
CAKE CONV RUNNING
POLYMER RUNNING
BOOST WATER PUMP MOTOR STARTER (110, 407)
BELT PRESS DRIVE PLC RUN FORWARD
BELT PRESS DRIVE PLC RUN REVERSE
SYSTEM READY TO RUN
SYSTEM FAULTED
ESTOP PRESSED
SYSTEM INTERLOCKS TO MCC
BLUE WIRE
NOTE: FOR JUMPERS 416 AND 417, WHEN JUMPER IS INSTALLED THE INPUTS TO THE PLC WHEN BECOME ACTIVE IN THE LOGIC WHEN THE JUMPER IS REMOVED THE INPUTS BECOME INACTIVE AND THE LOGIC WILL IGNORE THOSE VALUES AND INTERLOCKS
SYMBOL LEGEND
INTERNAL CONNECT WIRING ALL CONTROL PANELS
PANEL WIRING TERMINAL SSUCP MASTER CONTROL PANEL
INTERNAL PANEL WIRING
PANEL WIRING TERMINAL POLYMER CONTROL PANEL
SHOP CONNECT WIRING
FIELD CONNECT WIRING
PHOENIX
PHOENIX PROCESS EQUIPMENT CO.
TITLE SSUCP-46-600
I/O SCHEMATIC
FOR IQALUIT - WWTP
NUNAVUT
DWG.NO. 04183770804
REV. A

POWERFLEX 523 SERIES VFD

| Parameter | Description | BELT PRESS Value |
|---|---|---|
| P031 | MOTOR NP VOLTS | 460 |
| P032 | MOTOR NP HERTZ | 60 |
| P033 | MOTOR OL CUURENT | NAMEPLATE |
| P041 | ACCEL TIME | 2 |
| P042 | DECEL TIME | 2 |
| P043 | MIN FREQ (IN Hz) | 0 |
| P044 | MAX FREQ (IN Hz) | 60 |
| P045 | STOP MODE | 0 RAMP |
| P046 | START SOURCE | 2 |
| P047 | SPEED REF | 5 0-10V |
| to76 | RELAY OUT SELECT | 2 RUNNING |
| to62 | TWO WIRE FORWARD | 48 |
| to63 | TWO WIRE REVERSE | 50 |
| | | |
| | | |
| J4 | I/V JUMPER | V (VOLTAGE) |
| J8 | SINK / SOURCE JUMPER | SINK |
| | | |
| | | |

* NOTES: 1) THE ACTUAL NAMEPLATE FLA SHOULD BE USED FOR P#33. A TYPICAL VALUE IS SHOWN HERE.

| REV | DESCRIPTION | BY | DATE |
|---|---|---|---|
| A | UPDATED PARAMETERS | AMR | 5/8/19 |

| | | | | | |
|---|---|---|---|---|---|
| FINAL AS BUILT | - | - | DRAWN AMR | ENGINEER AMR | APPROVED |
| SHOP AS BUILT | - | - | SCALE N/A | FILE NO. 04183377 | DATE 9/21/18 |
| RELEASED FOR FABRICATION | AMR | 3/8/19 | | | |
| ISSUED FOR SUBMITTAL | - | - | | | |
| DRAWING STATUS | BY | DATE | | | |

PHOENIX
PHOENIX PROCESS EQUIPMENT CO.

TITLE SSUCP-48-600
DEVICE SETUP PARAMETERS
FOR IQALUIT - WWTP
NUNAVUT

DWG.NO. 04183377D807 REV. A

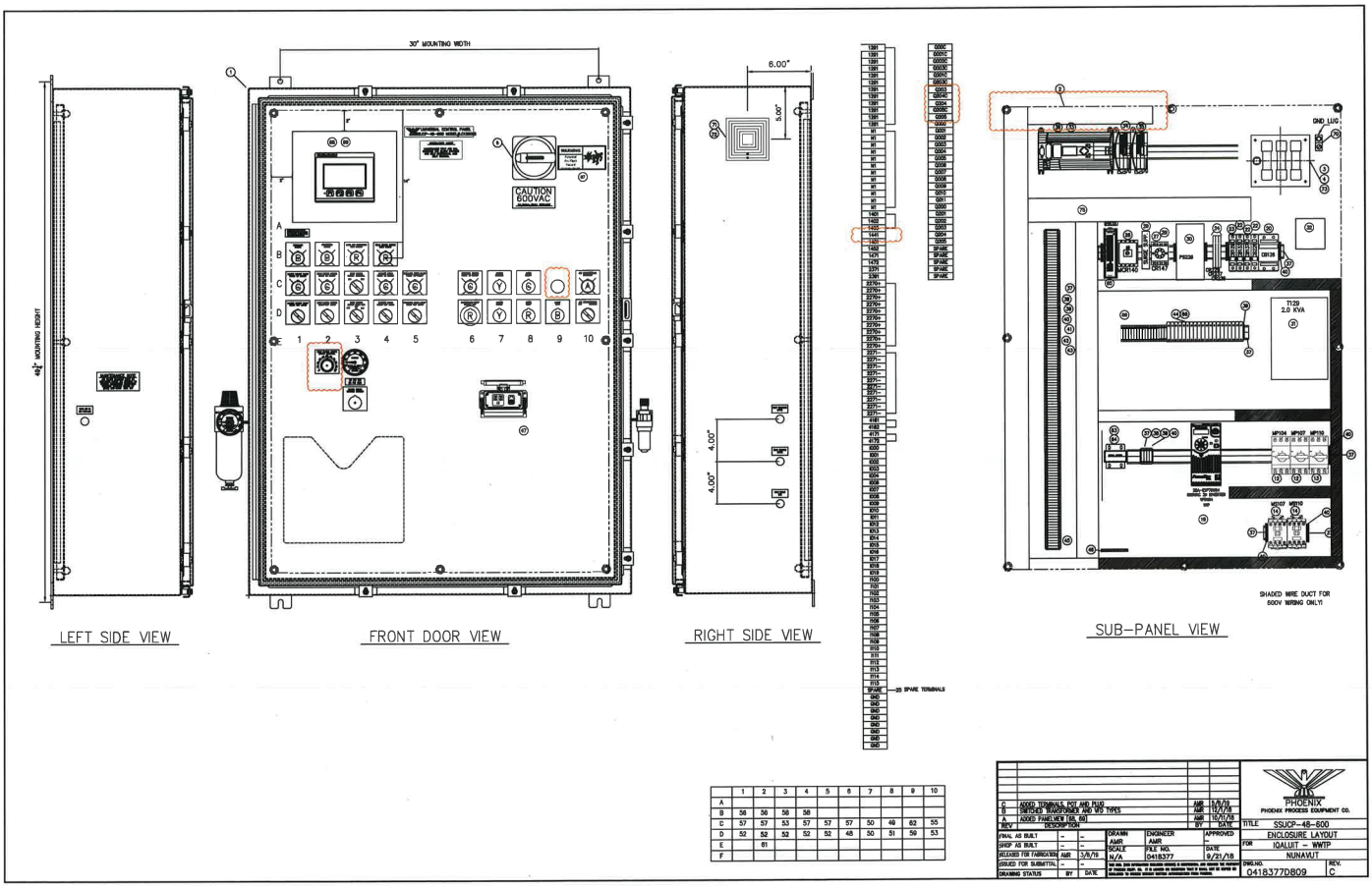
30" MOUNTING WIDTH
6.00"
5.00"
4.00"
4.00"
CAUTION
600VAC
GND LUG
T129
2.0 KVA
SHADED WIRE DUCT FOR
600V WIRING ONLY!
25 SPARE TERMINALS
LEFT SIDE VIEW
FRONT DOOR VIEW
RIGHT SIDE VIEW
SUB-PANEL VIEW
PHOENIX
PHOENIX PROCESS EQUIPMENT CO.
TITLE SSUCP-48-600
ENCLOSURE LAYOUT
FOR IQALUIT - WWTP
NUNAVUT
DWG.NO. 0418377D809
REV. C
C ADDED TERMINALS, PCT AND PLUG AMR 5/8/19
B SWITCHED TRANSFORMER AND WD TYPES AMR 12/7/18
A ADDED PANEL VIEW (68, 69) AMR 10/17/18
REV DESCRIPTION BY DATE
FINAL AS BUILT - -
SHOP AS BUILT - -
RELEASED FOR FABRICATION AMR 3/8/19
ISSUED FOR SUBMITTAL - -
DRAWING STATUS BY DATE
DRAWN AMR
ENGINEER AMR
APPROVED -
SCALE N/A
FILE NO. 0418377
DATE 9/21/18

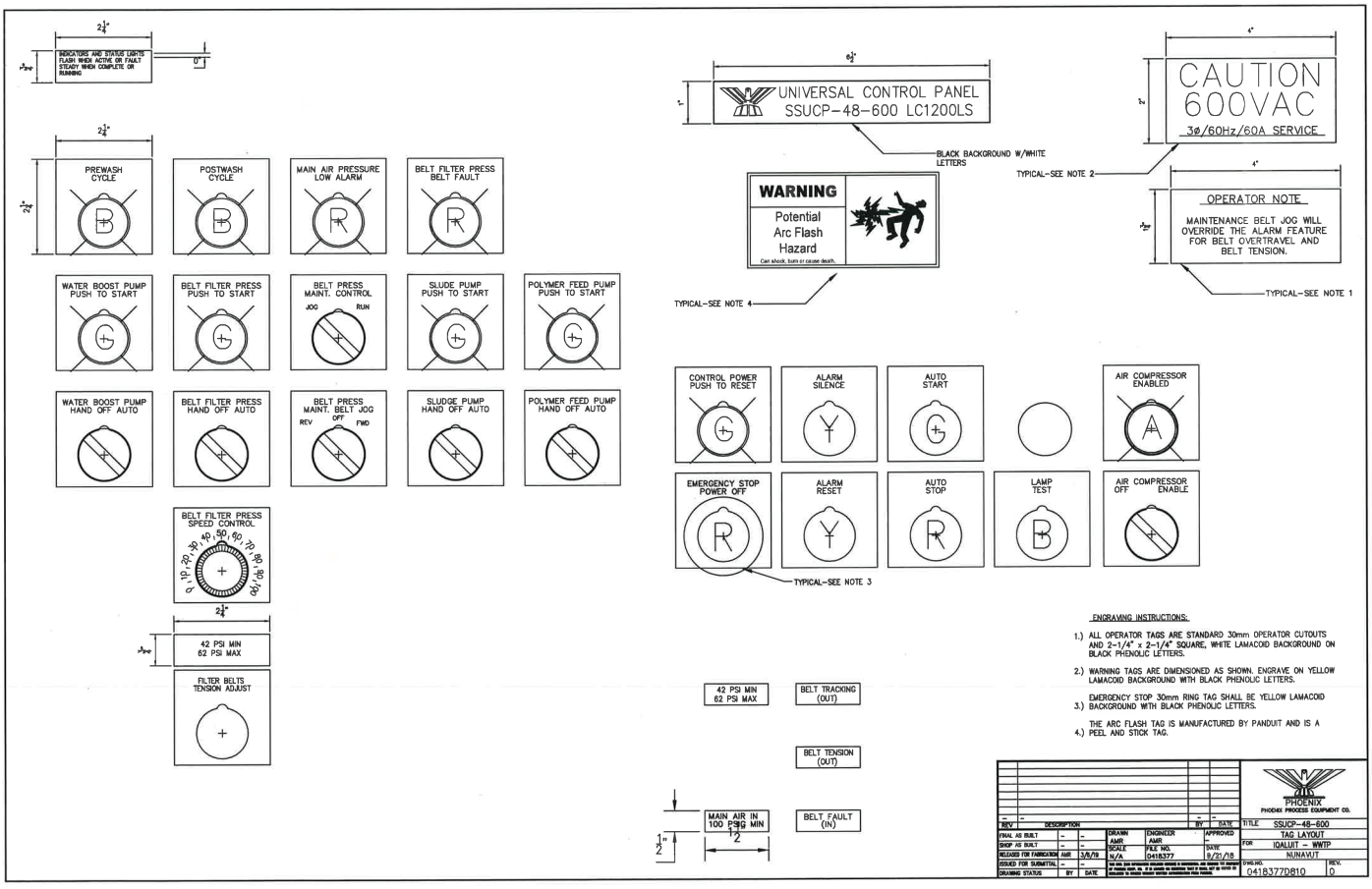


ENGRAVING INSTRUCTIONS:

1.) ALL OPERATOR TAGS ARE STANDARD 30mm OPERATOR CUTOUTS AND 2-1/4" x 2-1/4" SQUARE, WHITE LAMACOID BACKGROUND ON BLACK PHENOLIC LETTERS.

2.) WARNING TAGS ARE DIMENSIONED AS SHOWN. ENGRAVE ON YELLOW LAMACOID BACKGROUND WITH BLACK PHENOLIC LETTERS.

3.) EMERGENCY STOP 30mm RING TAG SHALL BE YELLOW LAMACOID BACKGROUND WITH BLACK PHENOLIC LETTERS.

4.) THE ARC FLASH TAG IS MANUFACTURED BY PANDUIT AND IS A PEEL AND STICK TAG.

| REV | DESCRIPTION | BY | DATE |
|---|---|---|---|
| – | – | – | – |

PHOENIX
PHOENIX PROCESS EQUIPMENT CO.

| | | | | | |
|---|---|---|---|---|---|
| FINAL AS BUILT | – | – | DRAWN | ENGINEER | APPROVED |
| SHOP AS BUILT | – | – | AMR | AMR | – |
| RELEASE FOR FABRICATION | AMR | 3/8/18 | SCALE | FILE NO. | DATE |
| ISSUED FOR SUBMITTAL | – | – | N/A | 0418377 | 9/21/18 |
| DRAWING STATUS | BY | DATE | | | |

TITLE: SSUCP-48-600
TAG LAYOUT
FOR: IQALUIT – WWTP
NUNAVUT

DWG.NO. 0418377DB10 REV. 0

## LC PIPING SCHEMATIC

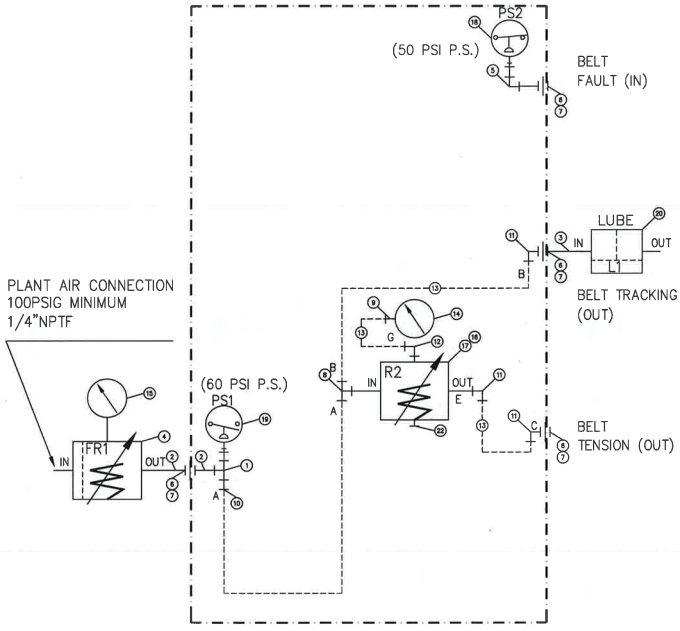


## PNEUMATIC BILL OF MATERIAL

| NO. | REC'D | QNTY | MANUFACTURER | DESCRIPTION | PART NO. |
|---|---|---|---|---|---|
| 1 | | 1 | PHOENIX | 1/4" BRASS TEE | E2258 |
| 2 | | 2 | PHOENIX | 1/4" BRASS CLOSE NIPPLE | E2259 |
| 3 | | 1 | PHOENIX | 1/4" X 2" BRASS NIPPLE | E2259A |
| 4 | | 1 | PHOENIX | FILTER/REG, 1/4" NPT, COALESCING, .3 MICRON | CH222B |
| 5 | | 1 | PHOENIX | 1/4" BRASS 90 ELBOW | E2266 |
| 6 | | 4 | PHOENIX | 1/4" BULKHEAD NICKLE PLATED | E2260 |
| 7 | | 4 | PHOENIX | SEALING WASHER | E2260A |
| 8 | | 1 | PHOENIX | 1/4" X 1/4" RUN TEE | E2287 |
| 9 | | 1 | PHOENIX | 1/4" X 1/4" CONNECTOR, FEMALE O DEG | E2282 |
| 10 | | 1 | PHOENIX | 1/4" X 1/4" CONNECTOR, MALE O DEG | E2284 |
| 11 | | 3 | PHOENIX | 1/4" X1/4" SWIVEL ELBOW 90 DEG | E2286 |
| 12 | | 1 | PHOENIX | 1/8" NPT X 1/4" SWIVEL ELBOW 90 DEG | E2285 |
| 13 | | 20' | PHOENIX | 1/4" OD POLYURETHANE TUBE NATURAL | E2754 |
| 14 | | 1 | PHOENIX | 1/4"NPT, 2.5"dia, 0-160 scale, Liquid Filled, Guage. | CH342 |
| 15 | | 1 | PHOENIX | 0-160 PSIG GAUGE, 1/8" NPT | CH342A |
| 16 | | 1 | PHOENIX | Panel Mounting Nut | CH221A |
| 17 | | 1 | PHOENIX | Regulator, 1/4"NPT, Panel Nut, Standard Knob | CH221 |
| 18 | | 1 | PHOENIX | Pressure Switch, setpoint 50psig rising | CH294 |
| 19 | | 1 | PHOENIX | Pressure Switch, setpoint 60psig falling | CH295 |
| 20 | | 1 | PHOENIX | 1/4" LUBRICATOR | CH225 |
| 21 | | . | . | . | . |
| 22 | | 1 | PHOENIX | 1/8" NPT PLUG | E2259C |
| 23 | | . | . | . | . |
| 24 | | . | . | . | . |
| 25 | | . | . | . | . |

NOTES:
1. ALL PNEUMATIC PARTS SUPPLIED BY PHOENIX PARTS DEPARTMENT.
2. THE KIT NUMBER IS (KIT-AIR-LC-CH221)
3. THE DASHED LINES DENOTE 1/4" TUBING RUNS IN THE SSUCP PANEL.

| REV | DESCRIPTION | BY | DATE |
|---|---|---|---|
| - | - | - | - |

| | | | |
|---|---|---|---|
| FINAL AS BUILT | - | - | |
| SHOP AS BUILT | - | - | |
| RELEASED FOR FABRICATION | AMR | 3/8/19 | |
| ISSUED FOR SUBMITTAL | - | - | |
| DRAWING STATUS | BY | DATE | |

| | | | |
|---|---|---|---|
| DRAWN | ENGINEER | APPROVED | |
| AMR | AMR | - | |
| SCALE | FILE NO. | DATE | |
| N/A | 0418377 | 9/21/18 | |

PHOENIX
PHOENIX PROCESS EQUIPMENT CO.

| | |
|---|---|
| TITLE | SSUCP-48-600 |
| | PNEUMATIC SCHEMATIC |
| FOR | IQALUIT - WWTP |
| | NUNAVUT |
| DWG.NO. | 0418377D811 |
| REV. | 0 |

## SSUCP-48-600 BILL OF MATERIAL

| NO. | REC'D | QNTY | MANUFACTURER | DESCRIPTION | PART NO. |
|---|---|---|---|---|---|
| 1 | | 1 | HOFFMAN | ENCLOSURE, SS NEMA 4X, SINGLE DOOR WALLMOUNT | A-48H3612SSLP |
| 2 | | 1 | HOFFMAN | SUBPANEL, 45" X 33" | A-48P36 |
| 3 | | 1 | ALLEN BRADLEY | ROTARY DISCONNECT SWITCH, 60A | 194R-J60-1753 |
| 4 | | 1 | ALLEN BRADLEY | NFPA 79 HANDLE KIT W/OPERATING SHAFT | 194R-N2 |
| 5 | | 1 | ALLEN BRADLEY | DISCONNECT OPERATING HANDLE, NEMA 4X | 194R-PY |
| 6 | | . | . | . | . |
| 7 | | . | . | . | . |
| 8 | | . | . | . | . |
| 9 | | . | . | . | . |
| 10 | | . | . | . | . |
| 11 | | 2 | ALLEN BRADLEY | 140M Front Mounted Auxiliary Contact | 140M-C-AFA11 |
| 12 | | 1 | ALLEN BRADLEY | MOTOR CIRCUIT PROTECTOR, 2.5-4.0A | 140M-C2E-B40 |
| 13 | | 2 | ALLEN BRADLEY | MOTOR CIRCUIT PROTECTOR, 4.0-6.3A | 140M-C2E-B63 |
| 14 | | 2 | ALLEN BRADLEY | CONTACTOR, IEC, 9A, 5HP, 120VAC | 100-C09D10 |
| 15 | | . | . | . | . |
| 16 | | . | . | . | . |
| 17 | | . | . | . | . |
| 18 | | . | . | . | . |
| 19 | | 1 | AB | VARIABLE FREQUENCY DRIVE, 1 HP, 600V | 25A-E1P7N104 |
| 20 | | 1 | ALLEN BRADLEY | CIRCUIT BREAKER, 2 POLE, 5A | 1489-M2C050 |
| 21 | | . | . | . | . |
| 22 | | 3 | ALLEN BRADLEY | CIRCUIT BREAKER, 1 POLE, 5A | 1489-M1C050 |
| 23 | | 1 | ALLEN BRADLEY | CIRCUIT BREAKER, 1 POLE, 20A | 1489-M1C200 |
| 24 | | 3 | ALLEN BRADLEY | CONTROL RELAY, TERMINAL, SPDT, 24VDC | 700-HLT1Z24 |
| 25 | | . | . | . | . |
| 26 | | 1 | ALLEN BRADLEY | CONTROL RELAY, 4 POLE, 120VAC | 700-P400A1 |
| 27 | | 1 | ALLEN BRADLEY | CONTROL RELAY, PLUG-IN, 3PDT, 120VAC | 700-HA33A1 |
| 28 | | 1 | ALLEN BRADLEY | RELAY SOCKET, 11 PIN | 700-HN126 |
| 29 | | 1 | TRANSTECTOR | SURGE PROTECTOR W/BASE, 120V | DR-120 |
| 30 | | 1 | SOLA | DC POWER SUPPLY, 120VAC/24VDC, 3.8A | SDN 4-24-100LP |
| 31 | | 1 | SOLAHD | TRANSFORMER, 600V/120V, 2KVA | CE2000ME |
| 32 | | 1 | ALLEN BRADLEY | POWER DISTRIBUTION BLOCK | 1492-PD3141 |
| 33 | | 1 | ALLEN BRADLEY | MICROLOGIX 1400 PLC, 20IN(120VAC), 12OUT(RELAY) | 1766-L32AWA |
| 34 | | 1 | ALLEN BRADLEY | INPUT MODULE, 16PT, 24VDC | 1762-IQ16 |
| 35 | | 1 | ALLEN BRADLEY | OUTPUT MODULE, 6PT, ISOLATED RELAY | 1762-OX6I |
| 36 | | 1 | ALLEN BRADLEY | MEMORY MODULE | 1766-MM1 |
| 37 | | A/R | ALLEN BRADLEY | DIN RAIL, 35mm | 199-DR1 |
| 38 | | A/R | ALLEN BRADLEY | TERMINAL BLOCK, IEC | 1492-J4 |
| 39 | | A/R | ALLEN BRADLEY | TERMINAL END BARRIER | 1492-EBJ3 |
| 40 | | A/R | ALLEN BRADLEY | TERMINAL END ANCHOR | 1492-EBJ35 |

## SSUCP-48-600 BILL OF MATERIAL

| NO. | REC'D | QNTY | MANUFACTURER | DESCRIPTION | PART NO. |
|---|---|---|---|---|---|
| 41 | | A/R | ALLEN BRADLEY | TERMINAL CENTER JUMPER, 41 POLE | 1492-CJUJ6-41 |
| 42 | | A/R | ALLEN BRADLEY | TERMINAL PARTITION PLATE | 1492-EBJ16 |
| 43 | | A/R | ALLEN BRADLEY | TERMINAL MARKER CARD | 1492-M6X12 |
| 44 | | A/R | ALLEN BRADLEY | TERMINAL BLOCK, FUSED FOR 1/4" X 1 1/4" | 1492-H4 |
| 45 | | A/R | ALLEN BRADLEY | GROUND TERMINAL BLOCK | 1492-WG4 |
| 46 | | 1 | ITE | GROUND BAR | GB10 |
| 47 | | 1 | AUTO DIRECT | PANEL INT CONN, 120VAC OUTLET RJ45 SGL-LVR | ZP-PSA-16-101 |
| 48 | | 1 | ALLEN BRADLEY | PUSHBUTTON, TWIST RELEASE, RED, MUSHROOM | 800H-FRXT6A5 |
| 49 | | 1 | ALLEN BRADLEY | PUSHBUTTON, FLUSH, GREEN, 1 N.O. | 800H-AR1D1 |
| 50 | | 2 | ALLEN BRADLEY | PUSHBUTTON, FLUSH, YELLOW, 1 N.O. | 800H-AR9D1 |
| 51 | | 1 | ALLEN BRADLEY | PUSHBUTTON, EXTENDED, RED, 1 N.O. 1 N.C. | 800H-BR6D1 |
| 52 | | 5 | ALLEN BRADLEY | SELECTOR SWITCH, 3 POSITION, MAINTAINED | 800H-JR2A |
| 53 | | 2 | ALLEN BRADLEY | SELECTOR SWITCH, 2 POSITION, MAINTAINED | 800H-HR2A |
| 54 | | . | . | . | . |
| 55 | | 1 | ALLEN BRADLEY | PILOT LIGHT, AMBER, 120VAC | 800H-PR16A |
| 56 | | 2 | ALLEN BRADLEY | PILOT LIGHT, BLUE, 120VAC | 800H-PR16B |
| 57 | | 5 | ALLEN BRADLEY | PILOT LIGHT, GREEN, 120VAC | 800H-PR16G |
| 58 | | 2 | ALLEN BRADLEY | PILOT LIGHT, RED, 120VAC | 800H-PR16R |
| 59 | | 1 | ALLEN BRADLEY | PUSHBUTTON, FLUSH, BLACK, 1 N.O. | 800H-AR2D1 |
| 60 | | . | . | . | . |
| 61 | | 1 | ALLEN BRADLEY | POTENTIOMETER, 1K OHM, 2W | 800H-UR13 |
| 62 | | 1 | HOFFMAN | HOLE SEAL, 304SS, 30mm | A-SPBSS |
| 63 | | 1 | RED LION | HOUR METER | CUB7T |
| 64 | | 1 | RED LION | MOUNTING BRACKET FOR CUB7T | BMK80000 |
| 65 | | 1 | ALLEN BRADLEY | 5 PORT ETHERNET SWITCH, UNMANAGED | 1783-US5T |
| 66 | | 23 | BUSSMAN | FUSE FOR TERMINAL, 250V, 2A | |
| 67 | | 1 | PANDUIT | ARC FLASH TAG | PPSC204W2100 |
| 68 | | 1 | ALLEN-BRADLEY | PANELVIEW 800 TOUCHSCREEN | 2711R-T4T |
| 69 | | 1 | FIBOX | INSPECTION PANEL, SMOKE | L 24 II |
| 70 | | 1 | ILSCO | GROUND LUG, #4-14 AWG | TA-6S |
| 71 | | 1 | FEDERAL SIGNAL | ALARM HORN, 120VAC, PANEL MOUNT | 350-120 |
| 72 | | 1 | FEDERAL SIGNAL | GASKET KIT FOR 350 HORN | K8435666A |
| 73 | | 3 | LITTELFUSE | FUSE, 600V, 60A, CLASS J INDICATIONG | JTD-60-ID |
| 74 | | . | . | . | . |
| 75 | | 1 | AS NEEDED | ETHERNET CAT6 CABLE | . |

| REV. | DESCRIPTION | BY | DATE |
|---|---|---|---|
| C | 11, 12, 13 | AMR | 5/8/19 |
| B | 10,21 | AMR | 12/7/18 |
| A | ADDED 68 69 | AMR | 10/17/18 |

PHOENIX
PHOENIX PROCESS EQUIPMENT CO.

| | | | | | |
|---|---|---|---|---|---|
| FINAL AS BUILT | - | - | DRAWN AMR | ENGINEER AMR | APPROVED - |
| SHOP AS BUILT | - | - | SCALE N/A | FILE NO. 04183377 | DATE 9/21/18 |
| RELEASED FOR FABRICATION | AMR | 3/8/19 | | | |
| ISSUED FOR SUBMITTAL | - | - | | | |
| DRAWING STATUS | BY | DATE | | | |

TITLE: SSUCP-48-600 BILL OF MATERIALS
FOR: IQALUIT - WWTP NUNAVUT
DWG.NO. 04183770812 REV. C

REVIEWED BY CONTRACTOR
Kudlik Construction Ltd.
NAME: Sandra Rousseau P.Eng
DATE: Jul 23, 2019

NORCLAIR
MÉCANIQUE DE PROCÉDÉ

# SHOP DRAWINGS

## DA-MP-57 Instrument air compressor package

**Date : 2019-07-22**

| **Information general** | |
|---|---|
| Project : **WWTP UPGRADE - IQALUIT** | |
| Client : Kudlik Construction Ltd.<br>To : Sandra Rousseau P.Eng., Project Manager | Project number : **2018-062**<br>E-mail : srousseau@kudlik.biz |
| Contractor : **Norclair inc.** | Project number Norclair : **P1039** |
| Address : 1100, Montée Masson, Laval, QC, Canada H7E 4P2 | |
| Project Manager : Hugo Chartier, Project Manager | E-mail: hchartier@norclair.ca |
| Phone : 450-688-4012 # 706 | Cell. : 514-703-0263 |

| **Information, subcontractor or supplier** | |
|---|---|
| Sub/supplier : ADEC Compressors | |
| Contact : Stéphane Hubert | Phone : 450-668-5050 poste 106 |

| **Information on the equipment** | |
|---|---|
| Speciality : **Process** | |
| Equipment : | |
| Drawing reference : | |
| Specification reference : **CCN-18** (Page xx / xx) | Division : |
| Article : | Number of pages : 27 |

**CONSULTANT APPROVAL**

Ensure the air is regulated to 365cfm @ 80 psi.

SHOP DRAWINGS ARE REVIEWED UNLESS NOTED OTHERWISE

| | |
|---|---|
| REVIEWED AS MODIFIED | X |
| REVISE & RESUBMIT | |
| SEAL & SIGNATURE REQUIRED | |

Stantec

DATE July 29/20

SIGNATURE

REVIEW BY STANTEC IS FOR THE SOLE PURPOSE OF ASCERTAINING GENERAL CONFORMITY WITH DESIGN. CONTRACTOR IS RESPONSIBLE FOR DIMENSIONS, FABRICATION AND CONSTRUCTION METHODS, COORDINATION OF SUB-TRADES, DETAIL DESIGN OF COMPONENTS, AND ERRORS OR OMISSIONS ON SHOP DRAWINGS.

INSTRUMENTATION & CONTROLS

STANTEC PROJECT #: 110126045

SUBMITTAL # DA-MP-57-Instrumental air compressor package

This review by Stantec is for general conformance with the design concept of the:
- ☐ Architectural
- ☐ Structural
- ☐ Mechanical
- ☑ Electrical
- ☐ Other

component(s) only and does not mean that Stantec has verified or approves the shop drawing(s). The Contractor remains solely responsible for the shop drawings and this review by Stantec does not relieve the Contractor of the Contractor's responsibility for errors or omissions in the shop drawing(s) or for meeting all requirements of the contract documents. This review does not mean that Stantec approves the detailed design inherent in the shop drawing, responsibility for which shall remain with the Contractor submitting same, nor does this review mean that Stantec accepts any deviation of the shop drawing(s) from the contract documents. The Contractor is responsible for confirming all dimensions and correlating them at the job site, for all construction means, methods and techniques, and for coordination of construction work of all trades, including coordination of all shop drawings.

Stantec

- ☑ REVIEWED
- ☐ REVIEWED, AS NOTED
- ☐ REVISE AND RESUBMIT
- ☐ NOT REVIEWED

DATE 2019-07-26

BY Konrad Goluch

1100, montée Masson
Laval, QC, Canada
H7E 4P2

Phone. : 450-688-4012
Fax : 450-661-6341
E-Mail : info@norclair.ca
www.norclair.ca

KAESER COMPRESSORS®

*Built for a lifetime.*




# Screw Compressors

## S Series

Capacities from: 8.8 to 89 cfm
Pressures from: 80 to 217 psig

**www.kaeser.com**

36 scfm @ 80psi

# SX, SM, and SK Series

## Built for a lifetime.™

*Kaeser Compressors' SX, SM, and SK series of rotary screw compressors are the perfect solution for smaller compressed air systems. Not only do these compressors deliver more compressed air for sustainable energy savings, they also combine ease of use with exceptional reliability and simple maintenance.*

### Innovation you can trust

With a cutting edge research and development team committed to building industry-leading products, Kaeser continues to deliver better solutions to meet our customers' compressed air needs. Kaeser's expertise and world-wide reputation for superior reliability and efficiency offer great performance and peace of mind.

### Rugged reliability

Kaeser's screw compressors meet our rigorous "built for a lifetime" standard. Designed and built with Kaeser's generations of compressed air experience, you can rest assured that these compressors will continue to deliver the air you need with the exceptional reliability you expect from a Kaeser compressor.

### Service-friendly

From the ground up, these compressors have been designed with the user in mind. Fewer wearing parts and using premium quality materials ensure reduced maintenance requirements, longer service intervals, and extended service life. A smart component layout with generously sized maintenance doors simplifies service and reduces downtime.

### Guaranteed efficiency

In our systems design approach, Kaeser chooses the components that work together in the most energy efficient way possible. Each and every component — from inlet filter to discharge flange — has been carefully designed with performance in mind. In fact, the S series are up to 30% more efficient than the competition. With Kaeser's superior system controls, we guarantee an effective system with lower operating costs.

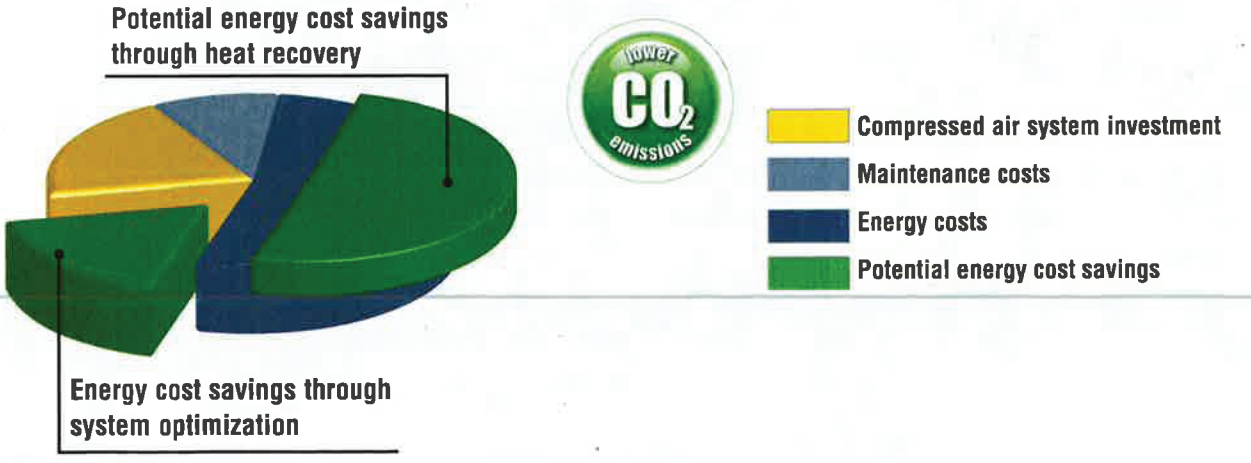

# Service-friendly Design

The SX, SM, and SK series rotary screw compressors feature an open package layout. All of the major components are easily accessible, reducing preventive maintenance time by as much as 50% when compared to other similarly sized units.

When you consider the energy efficiency savings and the maintenance costs savings, it's clear that owning a Built for a lifetime™ Kaeser compressor will save you money, year after year.

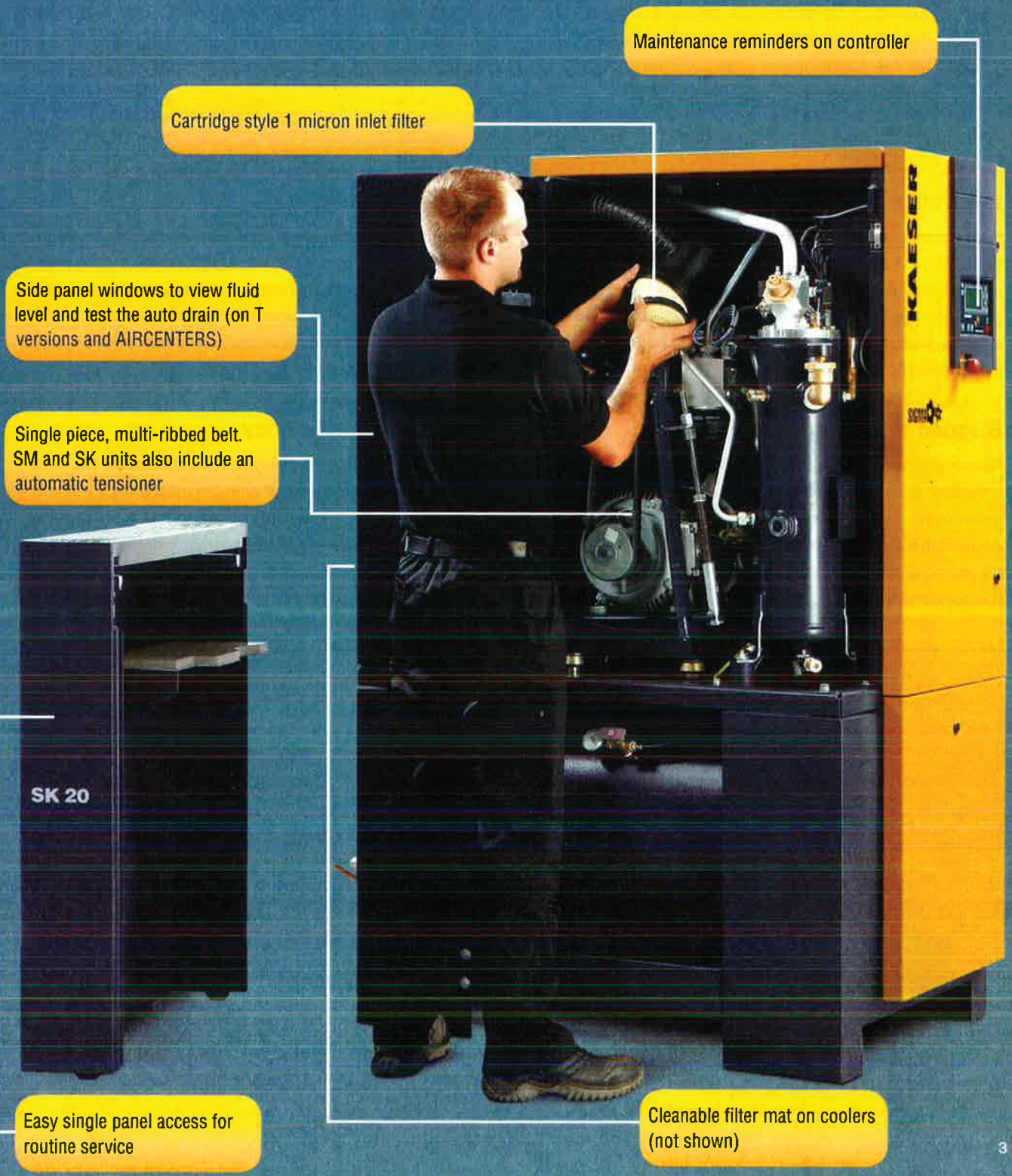

# Designed for Reliability, Simplicity, and Performance



## Sigma Profile™ Airend

Our power-saving, proprietary airend design delivers pressures up to 217 psig. It is precision-machined to close tolerances and optimized in size and profile to match the low airend speeds with their best specific performance.

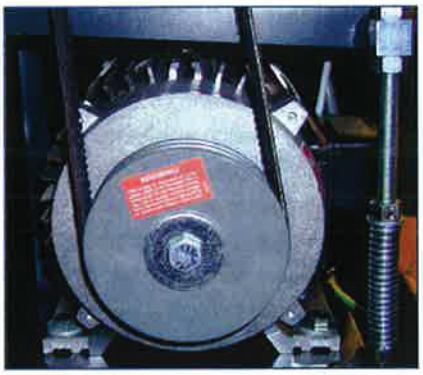

## TEFC Motor with Reduced Voltage Starter

Premium-efficiency, totally enclosed, fan cooled (TEFC) motors with Class F insulation provide long life in harsh environments. Magnetic Wye-Delta reduced voltage starters ensure low starting current and smooth acceleration. Tri-voltage 208-230/460 or 575 V, 3-phase, 60 Hz is standard. Other voltages are available.



## Double-flow Cooling Fan

Our patent-pending double-flow fan design increases air flow through the unit while reducing overall power requirements and sound levels.

## Belt Drive with Automatic Tensioning



A ribbed single belt drive efficiently transfers power from motor to airend. The SM and SK series feature our unique automatic tensioning device that maintains proper tension to maximize energy efficiency, prolong belt life, and simplify routine maintenance. The belt tension can easily be verified through a window in the service panel.

## High Efficiency Coolers with Filter Mat



Conveniently located on the outside of the unit, our standard high efficiency coolers provide maximum cooling resulting in approach temperatures as low as 11°F for more moisture separation at the compressor discharge and better air quality. A filter mat simplifies cooler maintenance. Dirt and dust build up on the outside of the filter, where it is easily seen and removed. This extends cooler service intervals and increases thermal reserve for harsher conditions.

## Efficient Separator System



A three-stage separator (ASME or CRN) combines centrifugal action and a 2-stage coalescing filter to reduce fluid carry over to 2 ppm or less. Quick release fittings, drain and fill ports are arranged for fast and easy fluid changes from sump and cooler without any pumping device. The easy-to-read fluid level indicator can be safely checked through a window in the service panel while the compressor is running.

## Enclosure

Our superior cabinet design reduces noise and footprint while offering easy access for service. A heavy-duty metal enclosure with a durable powder-coated finish keeps noise in but dirt and dust out. Thick sound insulation keeps sound levels as low as 61 dB(A), up to 10 dB(A) quieter than comparable units.

Lockable panels provide easy access to all maintenance items. Electrical components are housed in a spacious, ventilated control cabinet. Wiring is neatly arranged and terminals are clearly identified.

Internal and external vibration isolators eliminate stress on piping and wire connections, further increasing reliability.

## Fluid Cooling System

All units are filled with Kaeser Premium Fluid to cool, clean, and lubricate the airend. A thermostatically controlled combination valve ensures perfect fluid temperature regulation and incorporates a cooler by-pass and spin-on fluid filter. Main air and fluid lines are made of rigid pipe with flexible connections. A 10 micron spin-on fluid filter is within easy reach of the front cover. This filter extends fluid life and protects the airend.

## Optimized Air Flow Design

Air is drawn into separate cooling zones for the drive motor and coolers. This "split cooling" design eliminates pre-heating, increasing cooling efficiency without increasing power consumption. Cooler temperatures also promote longer lubricant and motor life. Cooling air is exhausted through a single port at the top of the cabinet. Ducting this air enables heat recovery and further reduces noise.

Air for compression enters through a separate grill on the right side of the cabinet. It is then filtered through a two-stage air intake filter. This filter protects the airend and extends fluid change intervals.

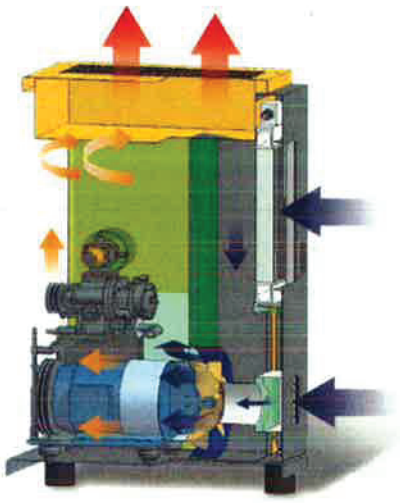

*Fresh cooling air*

*Recirculated air*

*Exhaust air*

*The SX, SM, and SK units can be installed in a corner and still provide easy access for maintenance.*




## Intelligent control and protection

To protect your investment and ensure the most efficient operation possible, these compressors are available with our Sigma Control 2™. This intelligent controller comes standard with multiple pre-programmed control profiles so you can select the one that best fits your application. Sigma Control 2 monitors more than 20 critical operating parameters, shuts the unit down to prevent damage, and signals if immediate service is required. It also tracks preventive maintenance intervals and provides notice when PMs are due. An RFID sensor provides secure access and simplifies managing maintenance intervals. An SD card slot with included SD card enables fast, easy software updates, storing key operational parameters, and offers long-term data storage for analyzing energy consumption and compressor operation. Sigma Control 2 has superior communications capabilities. An Ethernet port and built-in web-server come standard in the controller making integration into the Sigma Network possible.

The optional Sigma Control 2 with communications port can be fitted with communication modules like ModBus, EtherNet/IP, Profibus®, Devicenet®, Profinet®, or other industrial communi-cations interfaces as a plug-in option for seamless integration into plant control/ monitoring systems.

*See our Sigma Control 2 brochure for more information.*

# Integrated Dryer Option

## Premium compressed air quality

*The integrated dryer is perfectly sized for the full flow of the compressor. The dryer is located in a separate cabinet so it is not exposed to preheated air or contaminants from the compressor package.*




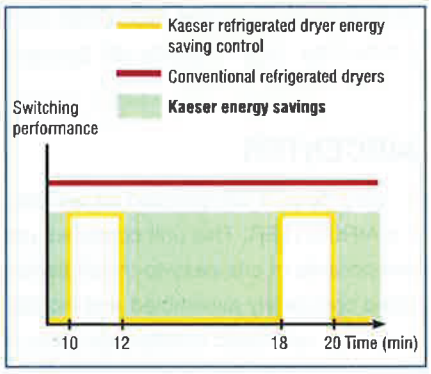


### Energy-saving control

The integrated refrigerated dryer in Kaeser units provides high efficiency performance thanks to its energy-saving control. The dryer is active only when compressed air actually needs to be dried. This approach achieves the required compressed air quality with maximum efficiency.

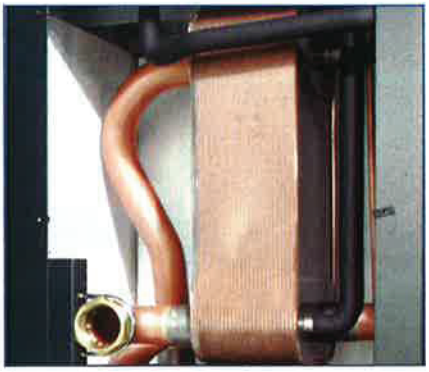

### Stainless steel plate heat exchanger

The dryer's stainless steel plate heat exchanger is corrosion and contamination-resistant. The stainless moisture separator reliably removes the accumulating condensate from the air, even with fluctuating airflow.



### Eco-Drain

The integrated refrigerated dryer also features a zero loss Eco-Drain. The advanced level-controlled condensate drain eliminates the compressed air losses associated with solenoid valve control. This saves energy and considerably enhances the reliability of the compressed air supply.



45

# Complete Compressed Air Systems

## Life just got easier

*Whether you prefer separate components or fully integrated packages, Kaeser offers everything for a complete, high quality air system.*

### AIRCENTER

To simplify your compressed air system, Kaeser offers the AIRCENTER. This unit combines essential system components in one easy-to-install package. AIRCENTERS come completely assembled and include a refrigerated dryer with automatic condensate drain, receiver tank, and an optional filtration package. These super quiet and energy efficient units are compact and perfect for installations where space is limited.




*Duplex AIRCENTER*




*SM AIRCENTER*

# Technical Specifications

| Model | Operating Pressure (psig) | Capacity at Operating Pressure (cfm) (1) | Motor (hp) | Dimensions W x D x H (in.) | Weight (lb.)(2) | Sound Level (dB(A)) (3) |
|---|---|---|---|---|---|---|
| SX 3* | 125 | 12.0 | 3 | 23¼ x 24⅞ x 38¼ | 309 | 61 |
| SX 3T* | 160* | 9.2 | | 23¼ x 36 x 38⅛ | 408 | |
| SX 3 AIRCENTER* | | | | 23¼ x 42⅞ x 61⅜ | 628 | |
| SX 4 | 125 | 15.9 | 4 | 23¼ x 24⅞ x 38¼ | 309 | 62 |
| SX 4T | 160 | 12.7 | | 23¼ x 36 x 38⅛ | 408 | |
| SX 4 AIRCENTER | 217 | 8.8 | | 23¼ x 42⅞ x 61⅜ | 628 | |
| SX 5 | 125 | 21.2 | 5 | 23¼ x 24⅞ x 38¼ | 320 | 63 |
| SX 5T | 160 | 17.0 | | 23¼ x 36 x 38⅛ | 419 | |
| SX 5 AIRCENTER | 217 | 12.7 | | 23¼ x 42⅞ x 61⅜ | 639 | |
| SX 7.5 | 125 | 28.3 | 7.5 | 23¼ x 24⅞ x 38¼ | 342 | 66 |
| SX 7.5T | 160 | 23.7 | | 23¼ x 36 x 38⅛ | 441 | |
| SX 7.5 AIRCENTER | 217 | 18.7 | | 23¼ x 42⅞ x 61⅜ | 661 | |
| SM 7.5 | 125 | 32.5 | 7.5 | 24¾ x 30 x 43¼ | 485 | 65 |
| SM 7.5T | 160 | 26.5 | | 24¾ x 43 x 43¼ | 650 | |
| SM 7.5 AIRCENTER | 217 | 19.4 | | 24¾ x 48 x 67¾ | 926 | |
| SM 10 | 125 | 45.9 | 10 | 24¾ x 30 x 43¼ | 529 | 67 |
| SM 10T | 160 | 37.1 | | 24¾ x 43 x 43¼ | 695 | |
| SM 10 AIRCENTER | 217 | 27.5 | | 24¾ x 48 x 67¾ | 970 | |
| SM 15 | 125 | 55.4 | 15 | 24¾ x 30 x 43¼ | 529 | 68 |
| SM 15T | 160 | 45.9 | | 24¾ x 43 x 43¼ | 695 | |
| SM 15 AIRCENTER | 217 | 35.7 | | 24¾ x 48 x 67¾ | 970 | |
| SK 15 | 125 | 70.6 | 15 | 29½ x 35¼ x 49½ | 686 | 67 |
| SK 15T | 160 | 59.0 | | 29½ x 48¾ x 49½ | 853 | |
| SK 15 AIRCENTER | 217 | 45.9 | | 29½ x 52½ x 74 | 1276 | |
| SK 20 | 125 | 88.3 | 20 | 29½ x 35¼ x 49½ | 703 | 68 |
| SK 20T | 160 | 76.6 | | 29½ x 48¾ x 49½ | 871 | |
| SK 20 AIRCENTER | 217 | 62.5 | | 29½ x 52½ x 74 | 1294 | |

***Specifications are subject to change without notice.***

## CAGI

### Certified Performance

Our compressors' energy efficiency has been tested and confirmed by an independent laboratory as part of the Compressed Air and Gas Institute's ***Rotary Screw Compressor Performance Verification Program***. CAGI data sheets for our screw compressor units can be found at www.us.kaeser.com/cagi




**SX 3 pressure limited to 160 psig.*

*(1) Performance rated in accordance with CAGI/ISO 1217 test code.*

*(2) Weights may vary slightly depending on airend model.*

*(3) Per ISO 2151 using ISO 9614-2.*

***Note:*** *Other pressures available from 80 to 217 psig.*

ensure air is regulated to 36 scfm @ 80 psi

**KAESER COMPRESSORS®**

***Built for a lifetime.***



**www.kaeser.com**


**Kaeser Compressors, Inc.**
511 Sigma Drive
Fredericksburg, VA 22408 USA
Telephone: 540-898-5500
Toll Free: 800-777-7873
info.usa@kaeser.com

**Kaeser Compressors Canada Inc.**
3760 La Verendrye Street
Boisbriand, QC J7H 1R5 CANADA
Telephone: (450) 971-1414
Toll free: (800) 477-1416
info.canada@kaeser.com

**Kaeser Compresores de México S de RL de CV**
Calle 2 #123
Parque Industrial Jurica
76100 Querétaro, Qro.
Telephone: 01 (442) 218 64 48
sales.mexico@kaeser.com

**Kaeser Compresores de Guatemala y Cia. Ltda.**
Calz. Atanasio Tzul 21-00, zona 12
El Cortijo II, Bodega 501
01012–Guatemala City
Telephone: +502 2412-6000
info.guatemala@kaeser.com



*© 2018 Kaeser Compressors, Inc. All rights reserved. 05/18*
*USSXSMSK*


4.6

2 units

Available voltage 203/230/460 ( 480 v. ok)/ 60 Hz.
With SIGMA Standard

AIRCENTER SM 10-TRIV Screw Compressor Packaged System Kaeser SC2
277/480V/3 PH/60 HZ, 42 CFM @ 125 PSI

36 cfm @ 80psi

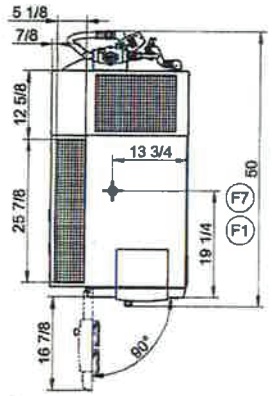


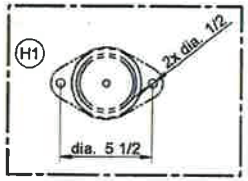


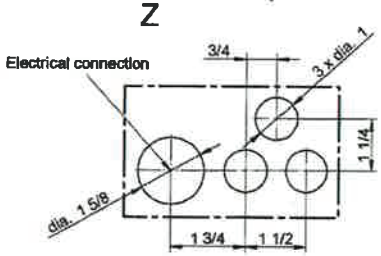


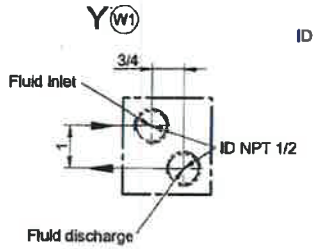


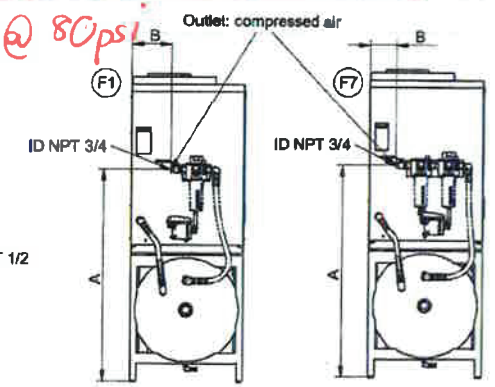


| | | A | B |
|---|---|---|---|
| F1 | F8KE / F8KE | 46 3/4 | 8 7/8 |
| | F16KE | 46 1/2 | 5 3/4 |
| F7 | F8KEA / F8KEA | 46 3/4 | 8 7/8 |
| | F16KEA | 46 1/2 | 5 3/4 |

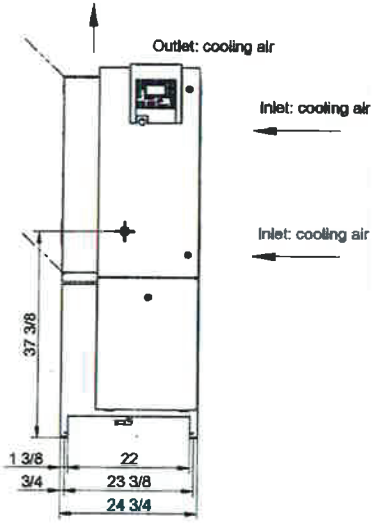


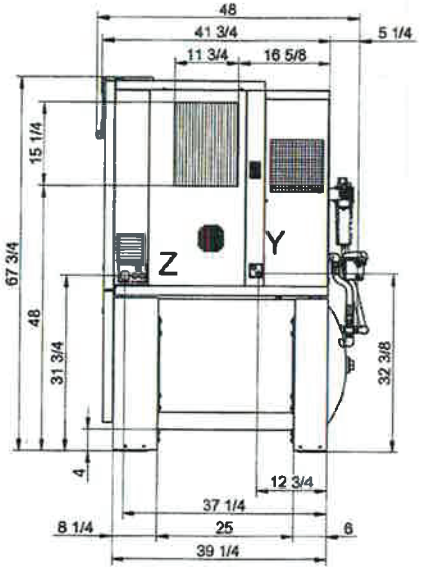


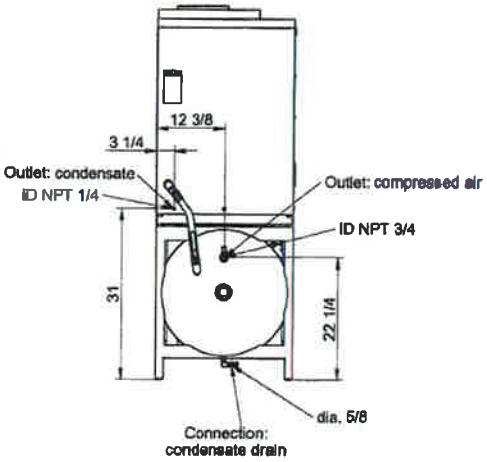


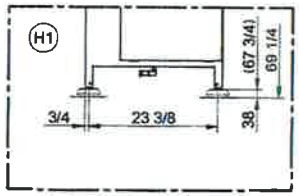


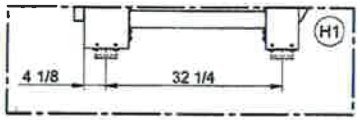


: Center of gravity
Position marginally dependent on design

Transport opening ≥ machine width + 3,9 inch

Dimensions shown in inches
ID : Internal thread

| | |
|---|---|
| W1 | prepared for ext. heat recov. |
| H1 | Machine mountings |
| K1 | Air cooling |
| F7 | KAESER FILTER KEA / ECO-DRAIN |
| F1 | KAESER FILTER KE / ECO-DRAIN |

| | | | | | |
|---|---|---|---|---|---|
| Change number | Projection | Scale 1:15 | | Date | Name |
| Document TZM 1036896 USE 00 | | Original A2 | Drawn | 21.08.2017 | BTAMMS |
| | | | Edited | 10.10.2017 | BTAMMS |
| | | | Released | 11.10.2017 | BCHUBTG |
| Document TZD 1036896 D 00 | | | Designation SM.3 AIRCENTER 7.5, 10, 15 AIRCOOLED | | |
| Status Released | | | Dimension and connection dim. | | |

KAESER KOMPRESSOREN
Language USE
Sheet 1 / 1

ES

**Model shown for reference only**
**Actual Duct size may vary with installation**

| | |
|---|---|
| A | Exhaust Fan |
| B | Exhaust Air Duct |
| Z | Inlet Air Opening |

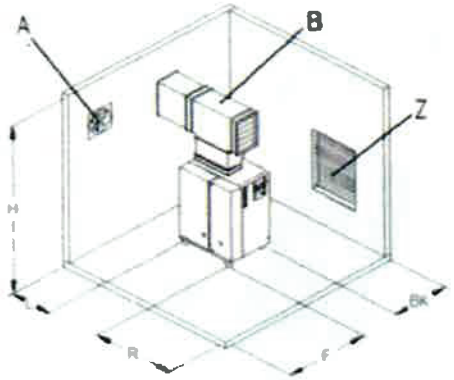


| Recommended machine placement and dimensions | | inches |
|---|---|---|
| L | Left side clearance = | 8 |
| R | Right side clearance = | 40 |
| F | Front clearance = | 40 |
| BK | Back clearance = | 40 |
| H | Height clearance = | 120 |

2x, pre-filter, 55 cfm, 3/4in, auto-drain, installed at compressor outlet
+ filter-regulators located at instruments as per Veolia specs

KAESER COMPRESSORS

*Built for a lifetime.*




# Compressed Air Filters

## Particulate, Liquid, and Oil Removal

20 - 500 scfm

**kaeser.com**

WB

# Compressed Air Filters: 20 - 500 scfm

## Superior filtration

*Proper filtration is necessary to ensure consistent air quality, but with it comes pressure drop. Every 2 psi of pressure drop increases power costs by 1%. Kaeser filters remove more contaminants with less pressure drop for lower operating costs. With a complete selection of application-specific filter types, sizes, technical service, and support, Kaeser offers a customized solution for all of your compressed air quality needs.*

### Why treat compressed air

Ambient air contains contaminants that are drawn into the compressor. These contaminants are concentrated during compression and can easily pass into the compressed air system. A typical compressed air system is contaminated with abrasive solid particles such as dirt, rust and pipe scale, compressor lubricants, condensed water droplets, and oil and hydrocarbon vapors.

Contaminated compressed air systems increase operating costs by reducing efficiency. This results in damaged pneumatic equipment, higher maintenance and repair costs, reduced production (due to downtime), and increased product rejections.

### Meeting your air quality requirements

Properly sized and selected Kaeser filters in conjunction with the appropriate dryer will remove harmful contaminants. This allows the compressed air system to deliver the quality of air required—whether it's plant, instrument, or breathing air.

### High performance filters and separators

Engineered and developed using the latest innovations and manufacturing techniques, Kaeser filter housings are designed with larger flow areas to ensure the lowest pressure drop and provide easier installation, operation, and maintenance. The result is consistent product quality with minimized operating costs.

## Life cycle cost savings

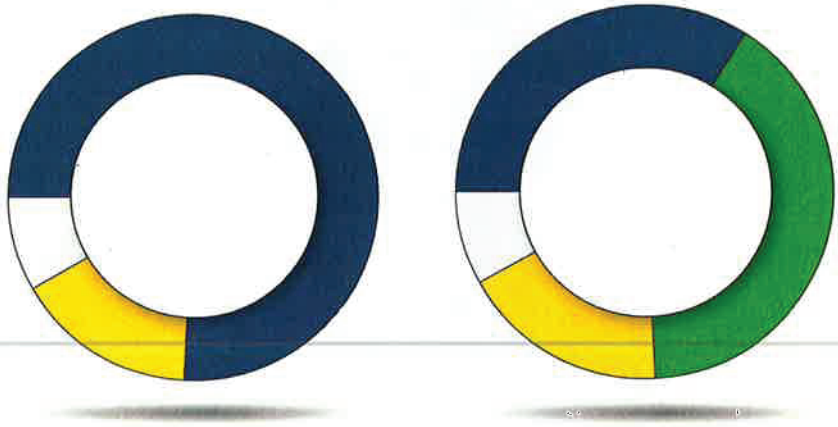


*Conventional Filters*

*Kaeser Filters*

*Particulate filter example:*
*Flow rate 485 scfm, 4800 hr/yr, $0.10 kWh, operating at 100 psig, over 10 years.*


KAESER
SECOTEC TE 142

# Key Features

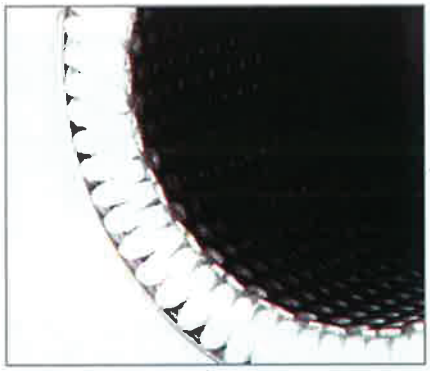

### Deep pleated filter elements

Kaeser's KB, KD, and KE dust and coalescing filter elements feature deep-pleated filter elements wrapped in stainless steel cages. The extra large surface area ensures superior filtration, increased efficiency, and reduced pressure drop.



### High efficiency carbon matting

Unlike the granular material used in many other filters, Kaeser's KA filters use carbon impregnated matting to prevent channeling while also reducing pressure drop. This highly absorptive matting is also effective at preventing particles from escaping.



### Minimized pressure losses

The generously-sized connection flanges help keep pressure losses to an absolute minimum. Additionally, all particulate and coalescing filters (KB, KD, KE) come standard with a differential pressure gauge to check filter efficiency at a glance.

# Filter Accessories



### FDPS sensor

Filter differential pressure sensor pressure gauge with volt-free contacts for remote alarm indication.



### Modular connection kit

Available in multiple sizes for installation flexibility.



### Wall mounting kit

Includes all the necessary hardware for fast and easy mounting.

**Multiple NPT connection sizes**

Threaded, modular connections for easy installation

**Compressed air inlet**

Optimized for air flow through housing to minimize pressure drop

**Filter element**

Push-on element for easy maintenance

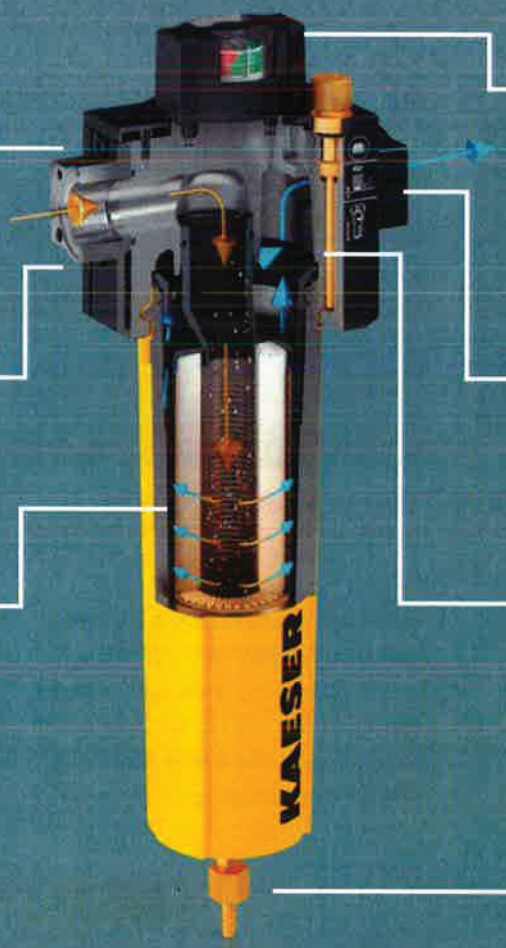


**Pressure differential indicator**

Standard on particulate and coalescing filters

**Compressed air outlet**

Filters maintain rated efficiency down to ten percent of flow capacity

**Safety locking screw**

Bleeds off pressure before allowing disassembly for increased safety

**Condensate outlet**

(Internal automatic condensate drain not shown)




## Installation flexibility

The optional Eco-Drain can rotate 360° to fit any installation requirement. Drain access is never a problem even when installed in tight corners or against a wall.

## Superior Quality and Durability

- Top quality castings
- Powder coated exterior for added durability and corrosion resistance
- Salt spray corrosion tested
- Treated interior
- Continuously-welded, stainless steel inner and outer cages for filter elements
- 5-year warranty on filter head and housing

## Enhanced Performance

- Latest filter media technology results in higher efficiencies and lower Delta P
- 150°F maximum inlet temperature
- 232 psig maximum working pressure
- Stainless steel support sleeves, oil and acid resistant coated collars, and end caps
- The tapered housing and non-turbulent lower filter zone prevent condensate from being picked up by the air flow



WB.

# Filter Types

| | KC [1] (Cyclone) Moisture Separator | KB [2] (Basic) Coalescing and Particulate | KE [2] (Extra Fine) Extra Coalescing and Particulate | KD (Dust) Particulate (Afterfilter) | KA (Adsorb) Vapor |
|---|---|---|---|---|---|
| **Initial pressure differential at saturation** | 1.5 psi | 2.0 psi | < 2.9 psi | < 0.5 psi (New, dry) | 0.5 psi (New, dry) |
| **Aerosol content at inlet** | -/- | 10 mg/m$^3$ | 10 mg/m$^3$ | -/- | -/- |
| **Remaining aerosol content at outlet as per ISO 12500-1:06-2007** | -/- | < 0.1 mg/m$^3$ | < 0.01 mg/m$^3$ | -/- | -/- |
| **Filter medium** | -/- | Deep pleated with support structure and polyester drainage fiber | | Deep pleated with support structure | High efficiency carbon fiber |
| **Application** | Bulk liquid separation | Filters solids, liquids, aerosols, and particulates | Same as KB, but for higher compressed air quality | Exclusively for filtering particulates | Exclusively for removing oil vapor |




[1] *Eco-Drain 31 is standard.*
[2] *Float-type drain is standard. Available with optional zero-loss Eco-Drain 30 or 31 to save energy and prevent compressed air loss.*

# Examples of Air Treatment Configurations with ISO 8573.1: 2010 Quality Classes Shown

These configurations don't depict every possible dryer-filter combination. Your Kaeser representative can help select the appropriate air treatment products for your application.

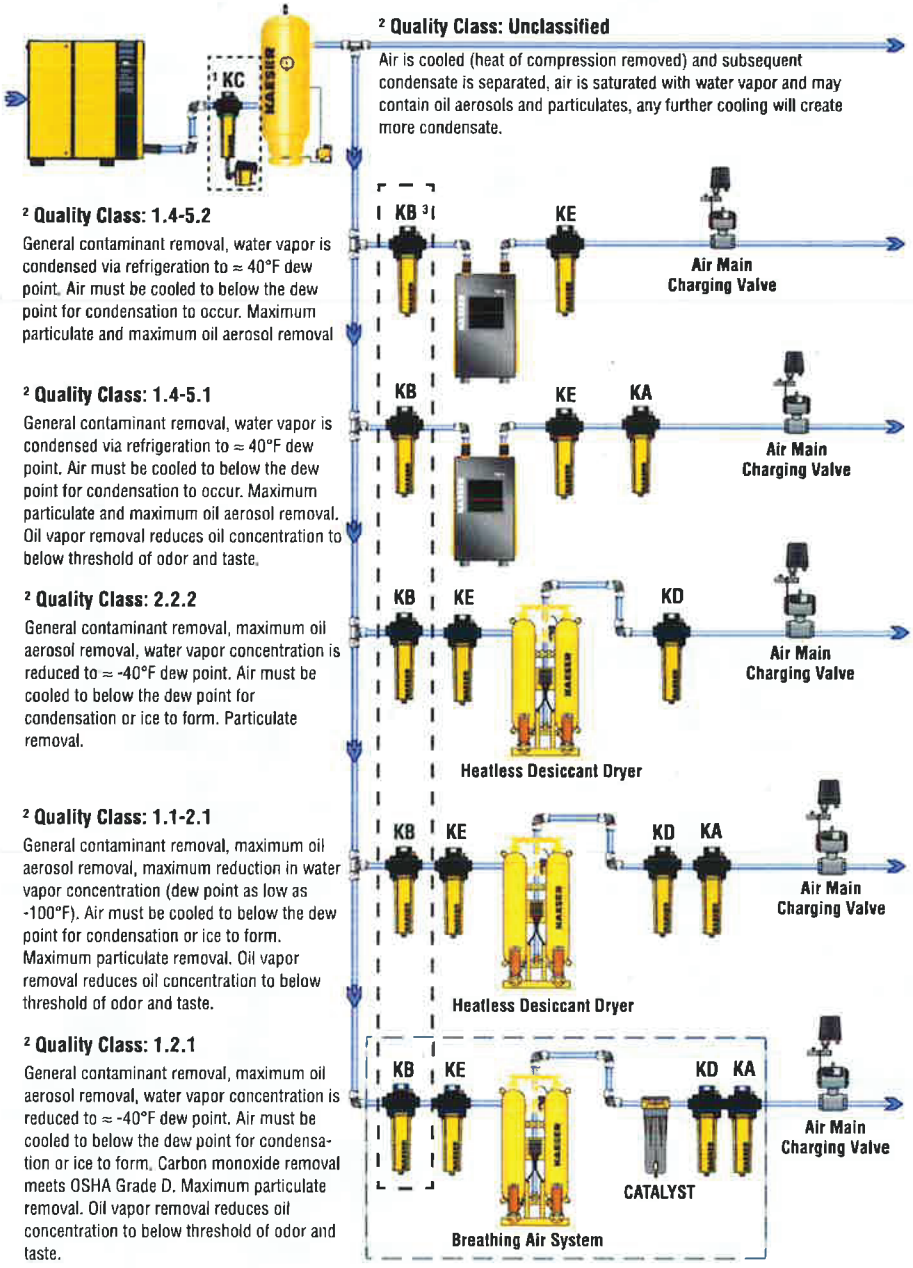


[1] *For compressors without an integrated moisture separator.*
[2] *Configuration meets ISO class when tested in an ISO 12500 certified facility per ISO 12500 testing directives.*
[3] *KB not needed if non-corrosive tank and piping are used before dryer*

## ISO 8573.1:2010

| SOLID PARTICLES / DUST | | | |
|---|---|---|---|
| Class | Max. particle count per m³ of a particle size with d* (µm) | | |
| | 0.1<d≤0.5 | 0.5<d≤1.0 | 1.0<d≤5.0 |
| 0 | Consult Kaeser | | |
| 1 | ≤20,000 | ≤400 | ≤10 |
| 2 | ≤400,000 | ≤6,000 | ≤100 |
| 3 | not specified | ≤90,000 | ≤1,000 |
| 4 | not specified | not specified | ≤10,000 |
| 5 | not specified | not specified | ≤100,000 |
| Class | Particle concentration* Cp (mg/m³) | | |
| 6 | 0 < Cp ≤5 | | |
| 7 | 5 < Cp ≤10 | | |
| X | Cp > 10 | | |

| HUMIDITY AND LIQUID WATER | | |
|---|---|---|
| Class | Pressure dew point | |
| 0 | Consult Kaeser | |
| 1 | ≤70°C | ≤-94°F |
| 2 | ≤-40°C | ≤-40°F |
| 3 | ≤-20°C | ≤-4°F |
| 4 | ≤ 3°C | ≤38°F |
| 5 | ≤7°C | ≤45°F |
| 6 | ≤10°C | ≤50°F |
| Class | Concentration of liquid water* Cw (g/m³) | |
| 7 | Cw ≤0.5 | |
| 8 | 0.5 < Cw ≤5 | |
| 9 | 5 < Cw ≤10 | |
| X | Cw > 10 | |

| OIL | | |
|---|---|---|
| Class | Total oil concentration* (liquid, aerosol, and vapor) | |
| | (mg/m³) | (ppm w/w) |
| 0 | Consult Kaeser | |
| 1 | ≤0.01 | ≤0.008 |
| 2 | ≤0.1 | ≤0.08 |
| 3 | ≤1.0 | ≤0.8 |
| 4 | ≤ 5.0 | ≤4 |
| X | > 5.0 | > 4 |

** At reference conditions: 68°F (20°C), 14.5 psia (1 bar), 0% relative humidity*

# Technical Specifications

| Model | Filter Type | Air Flow @100 psig (cfm) | Standard Conn. Size NPT(F)* (in.) | Max. Working Pressure (psig) | Housing Dimensions W x D x H (in.) | Weight (lbs.) |
|---|---|---|---|---|---|---|
| F6 | KA, KB, KD, KE | 20 | 1/2 | 232 | 6.1 x 3.4 x 14.1 | 7.5 |
| F9 | KA, KB, KC, KD, KE | 30 | 3/4 | | | |
| F16 | KA, KB, KD, KE | 55 | | | 6.5 x 3.9 x 15.4 | 8.8 |
| F22 | KA, KB, KD, KE | 75 | 1 | | 6.5 x 3.9 x 17.3 | 9.3 |
| F26 | KA, KB, KC, KD, KE | 90 | | | | 9.5 |
| F46 | KA, KB, KC, KD, KE | 160 | 1-1/2 | | 9.3 x 6.0 x 18.1 | 18.1 |
| F83 | KA, KB, KD, KE | 290 | 2 | | 9.3 x 6.0 x 21.5 | 20.1 |
| F110 | KA, KB, KD, KE | 390 | | | 9.3 x 6.0 x 29.4 | 23.6 |
| F142 | KA, KB, KC, KD, KE | 500 | | | | 24.5 |

*** Other connection sizes available**

***Specifications are subject to change without notice.***

## Proper Filter Sizing

*To find the maximum flow for a filter size at pressures other than 100 psig, multiply the rated flow by the Correction Factor corresponding to the minimum pressure at the inlet of the filter. Do not select filters by pipe size. Use flow rate and operating pressure.*

### Correction Factors

| Operating Pressure (psig) | 30 | 40 | 60 | 80 | 100 | 120 | 140 | 160 | 180 | 200 | 220 | 230 |
|---|---|---|---|---|---|---|---|---|---|---|---|---|
| Capacity Correction Factor | 0.39 | 0.48 | 0.65 | 0.83 | 1.00 | 1.08 | 1.16 | 1.23 | 1.30 | 1.37 | 1.43 | 1.46 |

***Note: Maximum inlet temperature is 150°F.***



### Silicone-free certification

Silicone-free versions of Kaeser filters are also available as an option. These filters are compliant with test standard PV-VW 3.10.7 and each one undergoes an individual coating test to confirm compliance. The supplied manufacturer's certificate attests that the product is silicone-free.

**KAESER COMPRESSORS**

***Built for a lifetime.™***




**www.kaeser.com**

**Kaeser Compressors, Inc.**
511 Sigma Drive
Fredericksburg, VA 22408 USA
Telephone: 540-898-5500
Toll Free: 800-777-7873
info.usa@kaeser.com

**Kaeser Compressors Canada Inc.**
3760 La Verendrye Street
Boisbriand, QC J7H 1R5 CANADA
Telephone: (450) 971-1414
Toll free: (800) 477-1416
info.canada@kaeser.com

**Kaeser Compresores de México S de RL de CV**
Calle 2 #123
Parque Industrial Jurica
76100 Querétaro, Qro.
Telephone: 01 (442) 218 64 48
sales.mexico@kaeser.com

**Kaeser Compresores de Guatemala y Cia. Ltda.**
Calz. Atanasio Tzul 21-00, zona 12
El Cortijo II, Bodega 501
01012–Guatemala City
Telephone: +502 2412-6000
info.guatemala@kaeser.com

*© 2016 Kaeser Compressors, Inc. All rights reserved. 07/16*
*USKFILTER*

# Series 05
## AIR LINE COMPRESSED AIR DISTRIBUTION SYSTEM

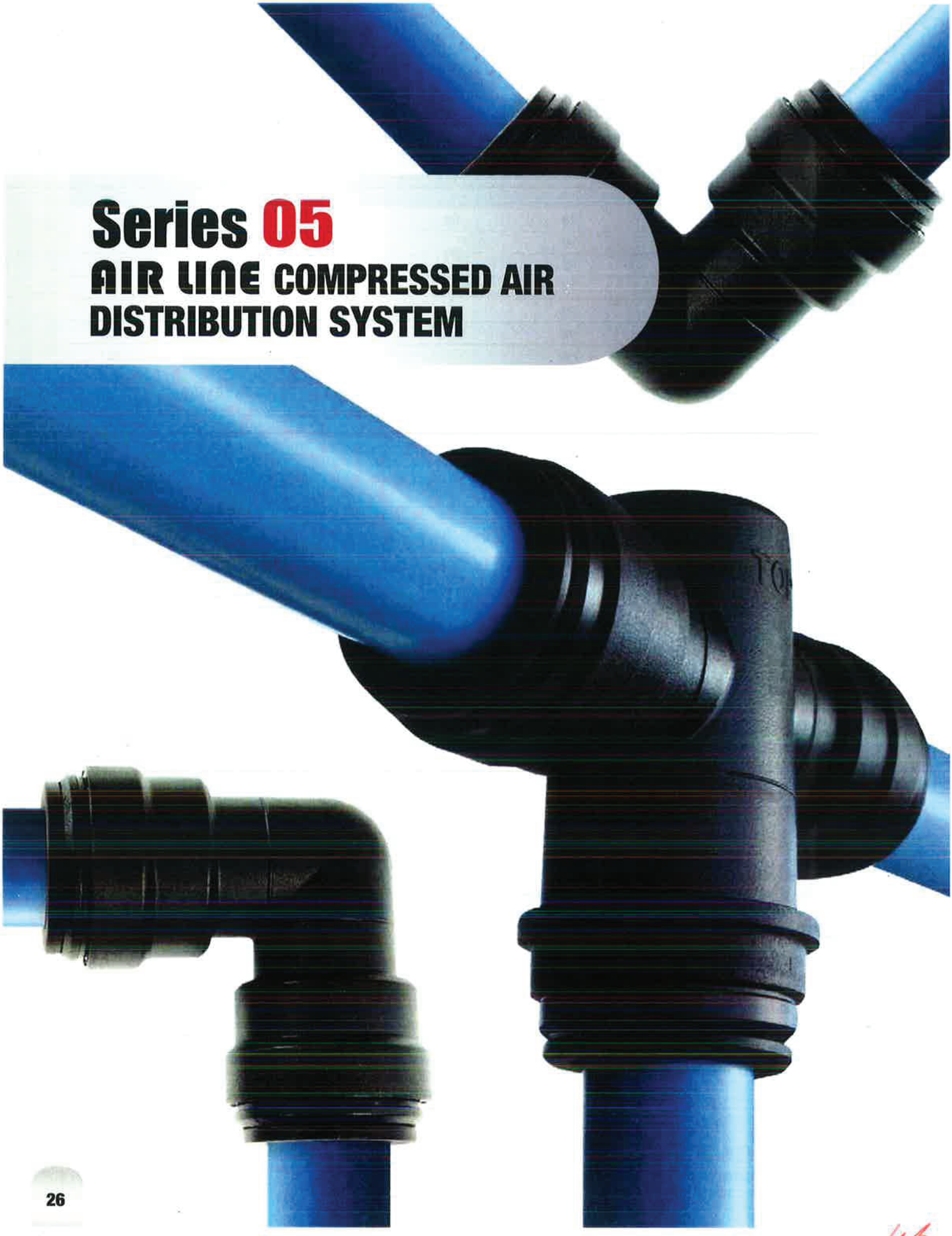

# AIR LINE
## AIR DISTRIBUTION SYSTEM






## FEATURES AND BENEFITS

- **Installation ease:** AIR LINE installations can be carried out easily by the end-user, eliminating the need to employ expensive sub-contractor labour
- **Installation speed:** Push-to-connect fittings and rigid Nylon pipe allows installation of AIR LINE systems to be done much more quickly than conventional systems requiring welding, soldering and threading of heavy components
- **No waiting period:** An AIR LINE system can be put under pressure immediately following installation – no need to wait for glue to dry, for welds to cool or for leakage testing
- **Total flexibility:** The flexibility of the AIR LINE system ensures modifications and expansions can be carried out quickly and easily in seconds with very little cost or lost production. Integrates perfectly with existing conventional piping
- **Energy savings:** By eliminating leaks, AIR LINE can save up 20 to 40% of power consumption costs. Both the pipe and fittings are designed to reduce friction and pressure drop, further reducing power consumption
- **TOPRING AIR LINE** fittings and pipe are made of high quality Nylon, avoiding corrosion and contamination and ensuring high quality compressed air
- **Performance:** Achieves high flow rates and low pressure drops due to low frictional losses through smooth bore of pipe
- **Lightweight:** Only a small fraction of the weight of conventional Steel or black Iron
- **Completely reusable:** AIR LINE components are easy to remove and relocate to a new location, making moving an easier task



Régie du bâtiment Québec

The **AIR LINE** system is approved for installation as a compressed air system, by RBQ and meets the requirements of UL Norm 94 V2.

## APPLICATIONS

The perfect system for air lines in workshops, garages and industry, also suitable for vacuum.

## SPECIFICATIONS

**Temperature Range:** 0 °C to 70 °C
**Working Pressure:** 145 PSI (23 °C)
100 PSI (70 °C)

# PROPER LINE SIZING FOR AN AIRLINE NETWORK

## HOW TO DETERMINE PROPER LINE SIZING:

1. Identify type of network: closed loop or dead-end
2. Calculate total length of line (feet)
3. Determine total flow required
4. Use the chart below in order to identify the proper sizing

## LINE SIZING FOR A CLOSED LOOP NETWORK

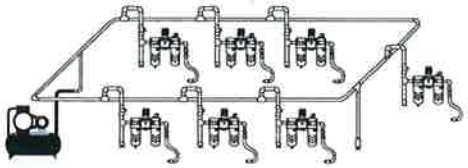

**TOTAL LENGTH OF NETWORK (FEET)**

TOTAL FLOW REQUIRED

| SCFM \ FEET | 100' | 150' | 200' | 250' | 300' | 400' | 500' | 600' | 700' | 800' | 900' | 1000' | 1250' | 1500' | 2000' |
|---|---|---|---|---|---|---|---|---|---|---|---|---|---|---|---|
| 5 | 15 | 15 | 15 | 15 | 15 | 15 | 15 | 15 | 15 | 15 | 15 | 15 | 15 | 15 | 15 |
| 10 | 15 | 15 | 15 | 15 | 15 | 15 | 15 | 15 | 15 | 15 | 15 | 15 | 22 | 22 | 22 |
| 15 | 15 | 15 | 15 | 15 | 15 | 15 | 15 | 22 | 22 | 22 | 22 | 22 | 22 | 22 | 22 |
| 20 | 15 | 15 | 15 | 15 | 15 | 22 | 22 | 22 | 22 | 22 | 22 | 22 | 22 | 22 | 22 |
| 30 | 15 | 22 | 22 | 22 | 22 | 22 | 22 | 22 | 22 | 22 | 22 | 22 | 28 | 28 | 28 |
| 40 | 22 | 22 | 22 | 22 | 22 | 22 | 22 | 22 | 28 | 28 | 28 | 28 | 28 | 28 | 28 |
| 60 | 22 | 22 | 22 | 22 | 28 | 28 | 28 | 28 | 28 | 28 | 28 | 28 | 28 | 28 | |
| 80 | 22 | 22 | 28 | 28 | 28 | 28 | 28 | 28 | 28 | 28 | 28 | | | | |
| 100 | 22 | 28 | 28 | 28 | 28 | 28 | 28 | 28 | | | | | | | |
| 125 | 28 | 28 | 28 | 28 | 28 | | | | | | | | | | |
| 150 | 28 | 28 | 28 | 28 | | | CONSULT SERIES 6 OR 7 | | | | | | | | |
| 200 | 28 | 28 | | | | | | | | | | | | | |

## LINE SIZING FOR A DEAD-END NETWORK

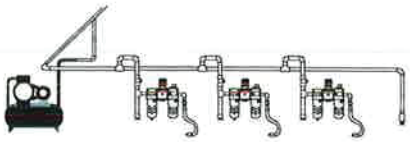

**TOTAL LENGTH OF NETWORK (FEET)**

TOTAL FLOW REQUIRED

| SCFM \ FEET | 25' | 50' | 75' | 100' | 150' | 200' | 250' | 300' | 400' | 500' | 600' | 700' | 800' | 900' | 1000' |
|---|---|---|---|---|---|---|---|---|---|---|---|---|---|---|---|
| 5 | 15 | 15 | 15 | 15 | 15 | 15 | 15 | 15 | 15 | 15 | 15 | 22 | 22 | 22 | 22 |
| 10 | 15 | 15 | 15 | 15 | 15 | 22 | 22 | 22 | 22 | 22 | 22 | 22 | 22 | 22 | 22 |
| 15 | 15 | 15 | 22 | 22 | 22 | 22 | 22 | 22 | 22 | 22 | 28 | 28 | 28 | 28 | 28 |
| 20 | 15 | 22 | 22 | 22 | 22 | 22 | 22 | 22 | 28 | 28 | 28 | 28 | 28 | 28 | 28 |
| 30 | 22 | 22 | 22 | 22 | 28 | 28 | 28 | 28 | 28 | 28 | 28 | 28 | 28 | | |
| 40 | 22 | 22 | 22 | 28 | 28 | 28 | 28 | 28 | 28 | | | | | | |
| 60 | 22 | 28 | 28 | 28 | 28 | 28 | | | | | | | | | |
| 80 | 28 | 28 | 28 | 28 | | | | | | | | | | | |
| 100 | 28 | 28 | 28 | | | | | | | | | | | | |
| 125 | 28 | | | | | | | | | | | | | | |
| 150 | 28 | | | | | | CONSULT SERIES 6 OR 7 | | | | | | | | |
| 200 | | | | | | | | | | | | | | | |

- Calculations based on total maximum pressure drop (△P) of no more than 3 PSIG for entire network, at 100 PSIG and 60 °F
- Total flow required takes account of all flows for all compressed air powered tools and equipment
- A typical compressor will produce approximately 4 SCFM per HP

# AIR LINE
## SEMI RIGID POLYAMIDE PIPE



## FEATURES AND BENEFITS

- **AIR LINE pipes are available in 3 different bore sizes: 15 mm (1/2"), 22 mm (3/4") and 28 mm (1")**
- **Low friction for high flow**
- **Prevents the formation of rust**
- **Lightweight for ease of manipulation**
- **Calibrated pipe size for leak-proof connections**

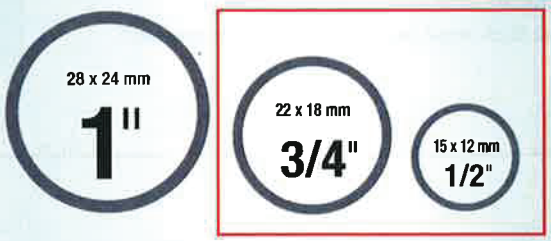


- CALIBRATED
- LIGHTWEIGHT
- ANTI-CORROSION

## MATERIALS

Polyamide 12 (PA12) - Self extinguishing

OK.

| Product No | Lenght ft | Lenght m | Size mm | Approx. I.D. in | Weight lb |
|---|---|---|---|---|---|
| 05.042 | 13 | 4 | 15 x 12 | 1/2 | 0.59 |
| 05.062 | 13 | 4 | 22 x 18 | 3/4 | 1.17 |
| 05.072 | 13 | 4 | 28 x 24 | 1 | 1.53 |

### WATER TRAP TEE

Ideal for tapping air off a main line without allowing water to get into the drop




| Product No | Size mm (A) | Size mm (B) |
|---|---|---|
| 05.079 | 22 | 15 |
| 05.080 | 22 | 22 |
| 05.083 | 28 | 15 |
| 05.084 | 28 | 22 |
| 05.085 | 28 | 28 |



- Stops condensed water within the main air line from entering the vertical drop legs.
- It is important that the main air line be installed with the correct slope, and that water drain points be regularly vented

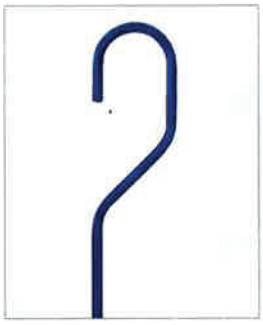

### PREFORMED DROP BEND PIPE

| Product No | Size mm |
|---|---|
| 07.130 | 15 |
| 07.135 | 22 |

- Special Aluminium alloy
- Ideal for tapping air off a main line without allowing water to get into the drop

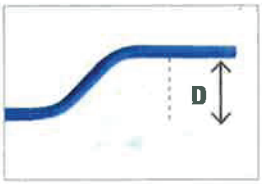


### DEVIATION PIPE

| Product No | D mm | Size mm |
|---|---|---|
| 07.131 | 80 | 15 |
| 07.136 | 100 | 22 |

- Special Aluminium alloy
- Ideal for getting around obstacles and correcting minor alignment problems



4,B

# PUSH-TO-CONNECT

Innovative push-to-connect technology makes assembly fast and easy

## MATERIALS

**Body:** Black acetal copolymer
**Seal:** Nitrile rubber
**Clamp:** Black acetal copolymer with stainless steel teeth

## FEATURES AND BENEFITS

- **Suitable for nylon and aluminium pipe**
- **Made of tough, resistant acetal copolymer plastic**
- **Push-to-connect design allows quick assembly**
- **Stainless steel gripping teeth for reliability and high pressure handling**
- **No soldering, no threading, no sealing required**
- **Full flow design**
- **Fully reusable**

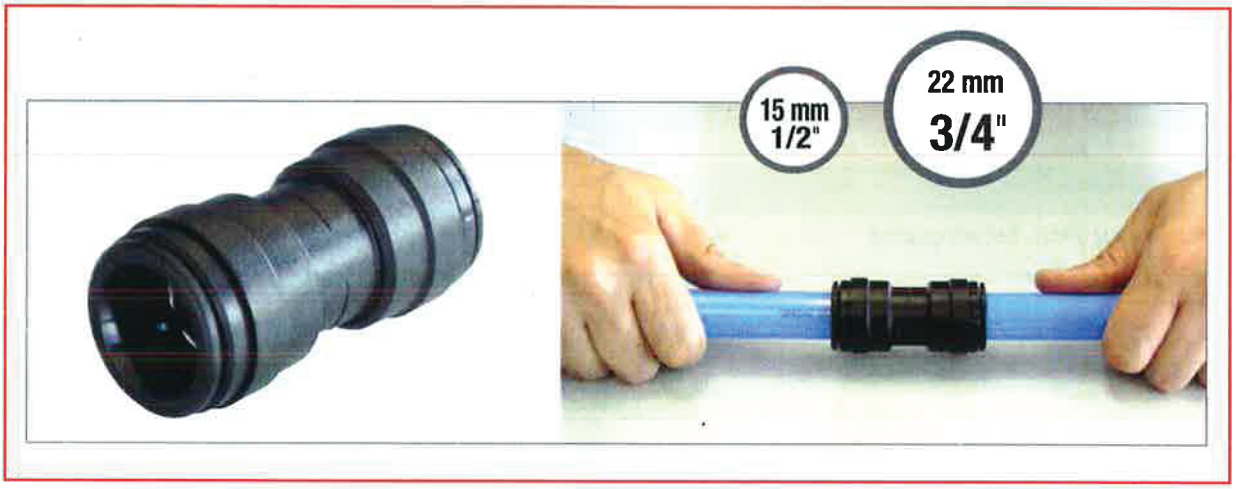




# PUSH-TO-CONNECT



## MALE CONNECTOR (NPT)

| Product No | Size mm | Thread (M) NPT |
|---|---|---|
| 05.116 | 15 | 1/2 |
| 05.121 | 22 | 3/4 |
| 05.125 | 28 | 1 |



## MALE CONNECTOR (BSPP)

| Product No | Size mm | Thread (M) BSPP |
|---|---|---|
| 05.115 | 15 | 1/2 |
| 05.120 | 22 | 3/4 |



## UNION REDUCER TEE

| Product No | Size mm (A) | Size mm (B) |
|---|---|---|
| 05.170 | 22 | 15 |



## « T » UNION

| Product No | Size mm |
|---|---|
| 05.160 | 15 |
| 05.165 | 22 |
| 05.168 | 28 |



## WATER TRAP TEE

| Product No | Size mm (A) | Size mm (B) |
|---|---|---|
| 05.079 | 22 | 15 |
| 05.080 | 22 | 22 |
| 05.083 | 28 | 15 |
| 05.084 | 28 | 22 |
| 05.085 | 28 | 28 |



## END CAP

| Product No | Size mm |
|---|---|
| 05.230 | 15 |
| 05.235 | 22 |



## STRAIGHT UNION

| Product No | Size mm |
|---|---|
| 05.130 | 15 |
| 05.135 | 22 |
| 05.140 | 28 |



## ELBOW UNION

| Product No | Size mm |
|---|---|
| 05.145 | 15 |
| 05.150 | 22 |
| 05.155 | 28 |



## FEMALE REDUCER

| Product No | Size mm (A) | Size mm (B) |
|---|---|---|
| 05.210 | 15 | 22 |
| 05.212 | 15 | 28 |
| 05.215 | 22 | 28 |



## MALE REDUCER

| Product No | Size mm (A) | Thread (M) BSPP (B) |
|---|---|---|
| 05.185 | 15 | 3/8 |
| 05.190 | 15 | 1/2 |
| 05.195 | 22 | 1/2 |
| 05.200 | 22 | 3/4 |
| 05.205 * | 28 | 1 NPT |

* Brass



## PLUG

| Product No | Size mm |
|---|---|
| 05.220 | 15 |
| 05.225 | 22 |
| 05.227 | 28 |



## STEM ELBOW

| Product No | Size mm |
|---|---|
| 05.365 | 15 |
| 05.370 | 22 |

## COMPOSITE MANIFOLD

### MATERIALS

Polyamide

### SPECIFICATIONS

**Maximum Working Pressure:** 145 PSI
**Temperature Range:** 0 °C to 70 °C




| Product No | Size mm Ⓐ | Outlet (F) NPT Ⓑ |
|---|---|---|
| 05.450 | 15 | 3/8 |




| Product No | Size mm Ⓐ | Outlet (F) NPT Ⓑ |
|---|---|---|
| 05.455 | 15 | 3/8 |




| Product No | Size mm Ⓐ | Outlet (F) NPT Ⓑ |
|---|---|---|
| 05.470 | 15 | 1/2 |
| 05.475 | 22 | 1/2 |




| Product No | Size mm Ⓐ | Outlet (F) NPT Ⓑ |
|---|---|---|
| 05.480 | 22 | 1/2 |




| Product No | Size mm Ⓐ | Outlet (F) NPT Ⓑ |
|---|---|---|
| 05.487 | 15 | 1/2 |
| 05.489 | 22 | 1/2 |




### SPACER



| Product No | For Manifolds |
|---|---|
| 47.120 | 47.108 - 47.112 - 07.470 - 07.480 |

## ALUMINIUM MANIFOLD

### MATERIALS

Aluminium

### SPECIFICATIONS

**Maximum Working Pressure:** 145 PSI
**Temperature Range:** 0 °C to 70 °C




| Product No | Size mm Ⓐ | Outlet (F) NPT Ⓑ |
|---|---|---|
| 05.492 | 15 | 3/8 (2x) |
| 05.496 | 22 | 3/8 (2x) |




| Product No | Size mm Ⓐ | Outlet (F) NPT Ⓑ |
|---|---|---|
| 05.494 | 15 | 3/8 (3x) |
| 05.498 | 22 | 3/8 (3x) |




| Product No | Size mm Ⓐ | Outlet (F) NPT Ⓑ |
|---|---|---|
| 05.493 | 15 | 3/8 (2x) |
| 05.497 | 22 | 3/8 (2x) |

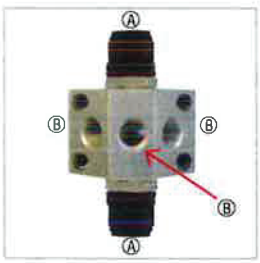


| Product No | Size mm Ⓐ | Outlet (F) NPT Ⓑ |
|---|---|---|
| 05.495 | 15 | 3/8 (3x) |
| 05.499 | 22 | 3/8 (3x) |

**FACTS TO KNOW**

For a complete selection of composite or aluminium manifolds, see Series 47







17_05_2016

## CLIPS



### PIPE CLIP FOR WALL MOUNTING

| Product No | Size mm ○ |
|---|---|
| 05.325 | 15 |
| 05.330 | 22 |
| 05.335 | 28 |

Adding horizontal or vertical brackets can be done simply without having to cut the pipe




### PIPE CLIP SPACER

| Product No | Thickness |
|---|---|
| 05.337 | 1/2" (12.7 mm) |



CLIP WITH SPACER

## PIPES CUTTER



### RATCHET TYPE PIPE CUTTER

| Product No | Description |
|---|---|
| 36.200 | Ratchet type Pipe cutter |
| 36.205 | Replacement blades (2) |

- Allows effortless cutting of nylon pipe up to 41 mm (1-5/8") O.D.
- Straight, even, accurate cutting



### PIPE CUTTER

| Product No | Description |
|---|---|
| 36.100 | Pipe cutter |
| 36.105 | Replacement blades (2) |

Allows effortless cutting of nylon pipe up to 41 mm (1-5/8") O.D. Straight, even, accurate cutting



### BATTERY-OPERATED PIPE CUTTER

| Product No | Description |
|---|---|
| 36.020 | Pipe cutter |

Allows effortless cutting of nylon pipe and hose up to 42 mm

## OTHER PRODUCTS



### MANUAL DRAIN

| Product No | Size mm ○ | Fittings |
|---|---|---|
| 05.500 | 15 | Acetal |
| 05.505 | 22 | Brass |

With ball valve, tube and fittings



### MECHANICAL AUTOMATIC DRAIN

| Product No | Size mm ○ | Fittings |
|---|---|---|
| 05.501 | 15 | Acetal |
| 05.506 | 22 | Acetal |

With ball valve, fittings and Y filter



### HIGH FLOW SAFETY EXHAUST / LOCKOUT VALVE

| Product No | Size mm ○ | Fittings |
|---|---|---|
| 07.430 | 15 | Brass |
| 07.435 | 22 | Brass |
| 07.440 | 28 | Brass |





### BRASS BALL VALVE

| Product No | Size mm ○ | Fittings |
|---|---|---|
| 05.400 | 15 | Acetal |
| 05.405 | 22 | Brass |
| 05.410 | 28 | Brass |



### SAFETY EXHAUST/ LOCKOUT BRASS BALL VALVE

| Product No | Size mm ○ | Fittings |
|---|---|---|
| 07.401 | 15 | Brass |
| 07.406 | 22 | Brass |
| 07.411 | 28 | Brass |

REVIEWED BY CONTRACTOR
Kudlik Construction Ltd.
NAME: Sandra Rousseau P.Eng
DATE: Jan 29, 2019

VEOLIA

# SHOP DRAWINGS

**Network Architecture** Date : 2019-01-29

| General Information | | | |
|---|---|---|---|
| Project | **WWTP UPGRADE - IQALUIT** | | |
| Client: | Kudlik Construction Ltd. | Project Number | 2018-062 |
| To: | Sandra Rousseau P.Eng., Project Manger | E-mail: | srousseau@kudlik.biz |
| Contractor | Veolia Water Technologies Canad Inc. | Project Number | 5000218036 |
| Address | 4105 Sartelon, Ville St. Laurent PQ, H4S 2B3 | | |
| Project Manger: | Clément Bekaert | E-mail: | clement.bekaert@veolia.com |
| Phone: | 514-334-7230 x 3243 | Cell: | 514-246-6232 |

| Information on the Equipment | | |
|---|---|---|
| Specialty: | Electrical / automation | |
| Equipment: | Control panel(s) | |
| Drawing Reference: | | |
| Specification reference: | 46.71.24<br>46 36 11 | |
| Article: | | |
| Revision: | Rev02 | |
| Titre: | Network Architecture | |
| Numero client: | DA-Veolia-CA-01-Network architecture | |
| Numero Veolia | 5000218038_CA_0002_AU_VWT | |
| Envoyer pour: | Approbation/Information: | Approbation |

**Consultant Approval**

Ensure connection between BFP Polymer control panel and Switch in CPL-901 via armoured Cat6 cable.

SHOP DRAWINGS ARE REVIEWED UNLESS NOTED OTHERWISE

| | | |
|---|---|---|
| REVIEWED AS MODIFIED | X | Stantec |
| REVISE & RESUBMIT | | |
| SEAL & SIGNATURE REQUIRED | | |

DATE February 01/19

SIGNATURE Ellie Bron

REVIEW BY STANTEC IS FOR THE SOLE PURPOSE OF ASCERTAINING GENERAL CONFORMITY WITH DESIGN. CONTRACTOR IS RESPONSIBLE FOR DIMENSIONS, FABRICATION AND CONSTRUCTION METHODS, COORDINATION OF SUB-TRADES, DETAIL DESIGN OF COMPONENTS, AND ERRORS OR OMISSIONS ON SHOP DRAWINGS.

4105 Sartelon
Ville St. Laurent, PQ
H4S-2B3

Phone: 514-334-7230
Fax: 514-334-5070
www.veoliawatertechnologies.ca

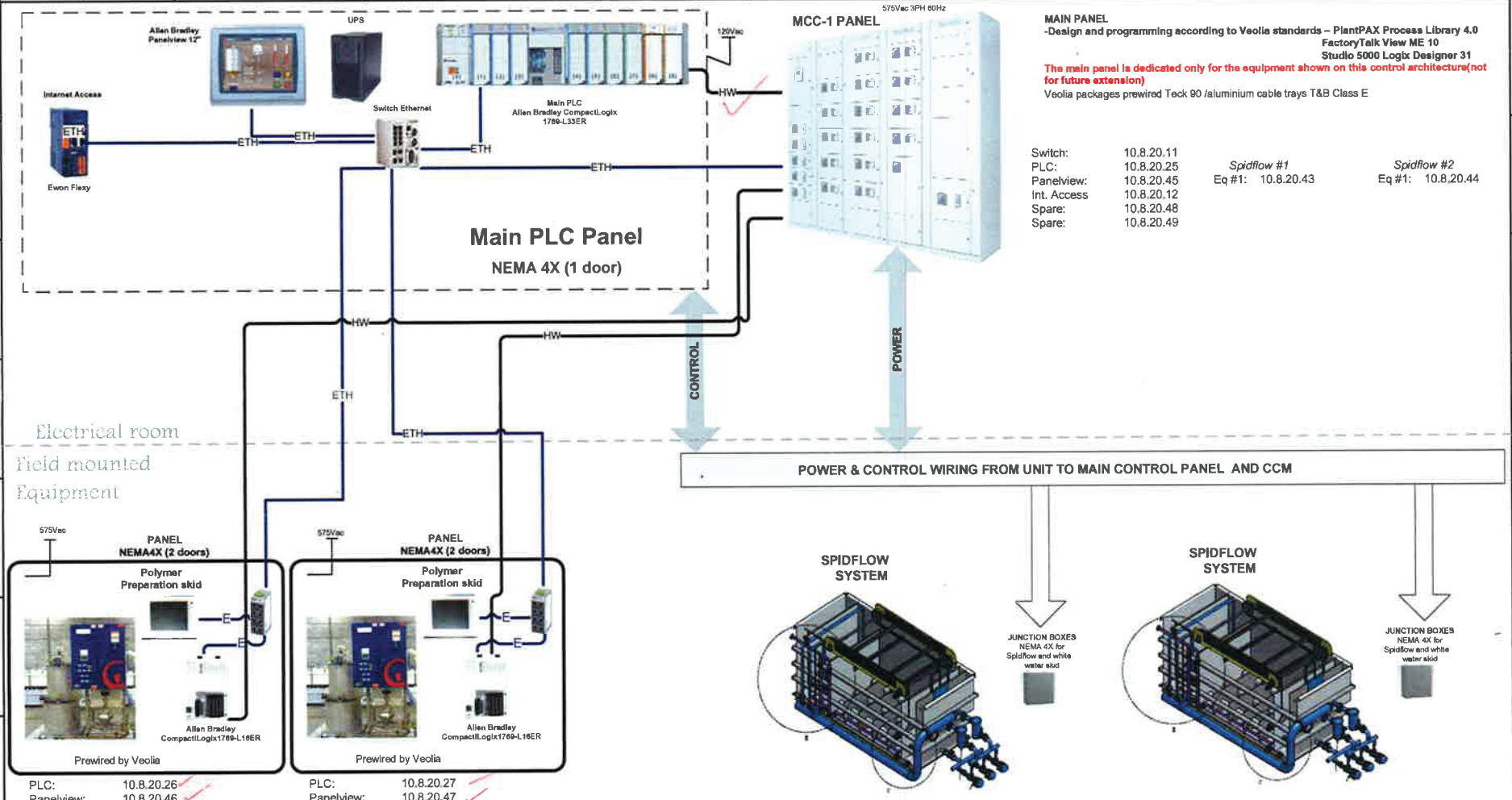


**MAIN PANEL**
**-Design and programming according to Veolia standards – PlantPAX Process Library 4.0**
**FactoryTalk View ME 10**
**Studio 5000 Logix Designer 31**

**The main panel is dedicated only for the equipment shown on this control architecture(not for future extension)**

Veolia packages prewired Teck 90 /aluminium cable trays T&B Class E

| | | | |
|---|---|---|---|
| Switch: | 10.8.20.11 | | |
| PLC: | 10.8.20.25 | *Spidflow #1* | *Spidflow #2* |
| Panelview: | 10.8.20.45 | Eq #1: 10.8.20.43 | Eq #1: 10.8.20.44 |
| Int. Access | 10.8.20.12 | | |
| Spare: | 10.8.20.48 | | |
| Spare: | 10.8.20.49 | | |

NOTES :

All subnetmask are 255.255.255.0
All default gateway are 10.8.20.1
All DNS: n/a

| | | |
|---|---|---|
| Coax | HW | Hardwire |
| USB | REP | REP Network |
| RS232 | FO | Fiber Optic |
| Profibus DP | DLR | Ethernet DLR |
| | Mod TCP | Modbus TCP/IP |
| | ETH | Panel Ethernet cables |

VEOLIA

TITLE: Network Architecture Process

CLIENT: Iqaluit WWTP Upgrade

| DATE | REV'D | CHK'D | APV'D | PROJECT | DRAWING | SHEET | REV |
|---|---|---|---|---|---|---|---|
| 2019-01-28 | DO | XM | - | 5000218036 | CA_0002_AU | 1 OF 1 | 2 |

# SUBMITTALS IDENTIFICATION SHEET

**PROJECT:** Wastewater Treatment Plant Upgrade
Iqaluit, Nunavut

NUNAMI
STANTEC LIMITED
1088C Noble House
Iqaluit NU
www.stantec.com

**CONTRACTOR: Kudlik Construction Ltd, Project 2018-062**

Telephone: 867-979-1166

E-mail: srousseau@kudlik.biz

**SUBCONTRACTOR: Yvon Roy electrical**

300, St-Jean Baptiste Nord, Princeville, Qubec, Qc G6L 5E 2

Person responsible: Cathy Brisson

Telephone: (819-505-1150) E-mail: cbrisson@yvonroyinc.com

**PRODUCT SUBMITTED:**

☐ As Specified

☐ Alternate

**SUPPLIER or MANUFACTURER:**

Person responsible:

Telephone:

**DESCRIPTION OF SUBMITTAL:**

# of pages:

Reference to drawings: I-201 note 1

Reference to specs:

Division: 47 Section: 47 30 01 2.2

**REMARKS:**

IJB-01-100 panel

**REVIEW AND COMMENTS (for use by Consultants):**

No comments

STANTEC PROJECT #: 110126045 SUBMITTAL # ROY-001 (2018-10-11)

This review by Stantec is for general conformance with the design concept of Stantec's design of the:

☐ Architectural ☐ Structural ☐ Mechanical ☐ Electrical ☑ Other Instrumentation

component(s) only and does not mean that Stantec has verified or approves the shop drawing(s). The Contractor remains solely responsible for the shop drawing(s) and this review by Stantec does not relieve the Contractor of the Contractor's responsibility for errors or omissions in the shop drawing(s) or for meeting all requirements of the contract documents. This review does not mean that Stantec approves the detailed design inherent in the shop drawing, responsibility for which shall remain with the Contractor submitting same, nor does this review mean that Stantec accepts any deviation of the shop drawing(s) from the contract documents. The Contractor is responsible for confirming all dimensions and correlating them at the job site, for all construction means, methods and techniques, and for coordination of construction work of all trades, including coordination of all shop drawings.

Stantec

☑ REVIEWED

☐ REVIEWED, AS NOTED

☐ REVISE AND RESUBMIT

☐ NOT REVIEWED

DATE 2018-OCT-11

BY David Hutchison, P.Eng.

Review of this submission is for compliance with general intent of the contract. This review does not relieve the Sub-Contractor, Supplier or Manufacturer of responsibility for error or omissions in the submission or the responsibility of meeting all requirements of the contract documents. Any deviation from the contract documents initiated by the Sub-Contractor, Supplier or Manufacturer shall be at their sole risk. QUANTITIES AND DETAIL DIMENSIONS ARE THE SUB-CONTRACTORS OR SUPPLIERS RESPONSIBILITY. VERIFY DATA WITH FIELD DIMENSIONS.

SUBMITTAL TRACKING No.: **ROY-001** 2018-10-11

# AJBEW Cast Junction Boxes

## Explosionproof, Dust-Ignitionproof

*NEC/CEC:*
*Class I, Division 1 and 2, Groups B◊, C◊, D*
*Class I, Zone 1 and 2, Groups IIA, IIB◊+$H_2$◊*
*Class II, Division 1 and 2, Groups E, F, G*
*Class III*
*NEMA 4, 7B◊C◊D, 9EFG*

*ATEX/IECEx — Optional ①:*
*Zone 1 and 2 – 21 and 22*
*Ⓔx II 2 GD*
*IP66 – IK10*

### Application

- Explosionproof junction boxes are used where hazardous materials are handled or stored. These enclosures may be used for:
  - Terminals
  - Splicing wires
  - Pull boxes
  - Bus boxes

### Features

- Precision machined flame path between box and cover.
- Bolt on stainless steel slotted mounting feet for horizontal or vertical mounting.
- Flexible hinge mounting either left or right side is standard on all boxes 12 x 12 x 06 and larger.
- External flange maximizes internal space.
- Wall thickness suitable for minimum of five full threads.
- Provision for mounting pan.
- Wide range of drilled and tapped outlets.
- Ground lug package and installation instructions for termination of ground wires enclosed.
- O-ring gasket insures watertight integrity.

### Standard Materials

- Bodies and covers: sand cast copperfree (4/10 of 1% max.) aluminum
- Cover bolts: stainless steel
- O-ring: neoprene
- Hinges: stainless steel
- Mounting pan: galvanized steel

### Standard Finishes

- Bodies and covers: shot blast finish standard

### Options

- Custom drilling and tapping.
- Set of 4 standoffs 12.7 mm (0.50") high. For factory-installed option add suffix **-AB**.
- Breather, NEMA 4X (includes outlets and installation). For factory-installed option add suffix **-BR**, for field-installed option order catalog number **BRTB4X**.
- Drain, NEMA 4X (includes outlets and installation). For factory-installed option add suffix **-DN** for field-installed option order catalog number **ECD50B4X**.
- Desiccate package. For factory-installed option add suffix **-DP1**, for field-installed option order catalog number **AWG13/1CT**.
- External grounding stud 3/8"-16. For factory-installed option add suffix **-EGS**.
- Gray epoxy powder coat (outside). For factory-installed option add suffix **-G1**.
- Gray epoxy powder coat available to provide NEMA 4X rating (inside and outside). For factory-installed option add suffix **-G2**.
- Internal Ground Stud, #14 - #2. For factory-installed option add suffix **-GNDKIT**.
- Hinges: stainless steel hinge available for boxes up to 11 x 30 x 03. For factory-installed option add suffix **-H**.
- Hinge Kit, 2 light duty SS hinges. For field-installed option order catalog number **AHOF12SS**.
- Hinge Kit, 2 heavy duty SS hinges. For field-installed option order catalog number **AHOF22SS**.



- Hinge Kit, 3 heavy duty SS hinges. For field-installed option order catalog number **AHOF23SS**.
- Terminal blocks 600 Volt, 30 Amp Indicate number of points: example: 5 points = 5K. For factory-installed option add suffix **-K**.
- Plastic nameplate, 50.8 x 101.6 mm (2.00 x 4.00"), 3.3 mm (13") black letters on white surface, 3 lines max, specify legend. For factory-installed option add suffix **-NP**.
- SS captive Quad-Lead bolts. For factory-installed option add suffix **-Q**.
- ATEX complete product certification add suffix **-X** ①.
- ATEX U component certification add suffix **-XU** ①.
- Mounting pan. For factory-installed option add suffix **-Z**.

### NEC/CEC Certifications and Compliances

- UL Standard: UL 1203
- cULus Listed: E85310
- CSA Standard: C22.2 No. 25, C22.2 No.30
- CSA Certified: 042129

### ATEX/IECEx Certifications and Compliances

- Certification Type JBEW
  - Gas, Zones 1 and 2
    - Conforming to ATEX 94/9/CE: Ⓔx II 2 G
    - Type of Protection: Ex d IIB + $H_2$ GB
  - Dust, Zones 21 and 22
    - Conforming to ATEX 94/9/CE: Ⓔx II2 D
    - Type of Protection: Ex t Db
- Ambient Temperature: -40 °C to +55 °C (-40 °F to +131 °F)
- CE Declaration of Conformity: 5C239
- ATEX Certificate: LCIE 07 ATEX 6069X
- IECEx Certificate: IECEx LCI 07.0018X
- Internal Volume: > 2dm³ (122 in³) — 2 liters
- Index of Protection according EN/IEC 60529: IP66
- Impact Resistance (shock): IK10

### EURASEC Certification

- Certification Type JBEW
  - EURASEC N° TC RU C-FR.ГБ05.B.00911

*◊ For Groups B and C, all conduits must be sealed within 50.8 mm (2") of the enclosure.*
*① Ordering a product with any ATEX Certification nulls the UL, CSA and cULus Certifications.*





Visit our website at **www.emerson.com** or contact us at **(800) 621-1506.**
© May 2017

EMERSON

# AJBEW Cast Junction Boxes

## Explosionproof, Dust-Ignitionproof

*NEC/CEC:*
*Class I, Division 1 and 2, Groups B◊, C◊, D*
*Class I, Zone 1 and 2, Groups IIA, IIB◊+$H_2$◊*
*Class II, Division 1 and 2, Groups E, F, G*
*Class III*
*NEMA 4, 7B◊C◊D, 9EFG*

*ATEX/IECEx — Optional ①:*
*Zone 1 and 2 – 21 and 22*
*Ex II 2 GD*
*IP66 – IK10*

| Dimensions in Millimeters (Inches) | | | | | | | | | | | | Max. Conduit Size Inches | Ship Weight kg (lb) | Mounting Hardware Catalog Number | Catalog Number |
|---|---|---|---|---|---|---|---|---|---|---|---|---|---|---|---|
| Overall Dimensions | | | Mounting Dimensions | | | | Inside Dimensions | | | | | | | | |
| F | E | G | A | AA | B | BB | W | H | Db | Dc | K | | | | |
| 416.1 (16.38) | 889.0 (35.00) | 260.4 (10.25) | 241.3 (9.50) | 384.3 (15.13) | 835.2 (32.88) | 692.2 (27.25) | 285.8 (11.25) | 759.0 (29.88) | 157.2 (6.19) | 47.8 (1.88) | 106.4 (4.19) | 3 | 51.3 (113) | AMH8 | AJBEW113006 |
| 441.5 (17.38) | 441.5 (17.38) | 235 (9.25) | 219.2 (8.63) | 397.0 (15.63) | 397.0 (15.63) | 219.2 (8.63) | 311.2 (12.25) | 311.2 (12.25) | 146.1 (5.75) | 38.1 (1.50) | 95.3 (3.75) | 3 | 29.5 (65) | AMH8 | AJBEW121206 |
| 441.5 (17.38) | 441.5 (17.38) | 292.1 (11.50) | 219.2 (8.63) | 397.0 (15.63) | 397.0 (15.63) | 219.2 (8.63) | 311.2 (12.25) | 311.2 (12.25) | 196.9 (7.75) | 38.1 (1.50) | 120.7 (4.75) | 3 | 31.8 (70) | AMH8 | AJBEW121208 |
| 431.8 (17.00) | 584.2 (23.00) | 231.9 (9.13) | 177.8 (7.00) | 400.1 (15.75) | 533.4 (21.00) | 358.9 (14.13) | 311.2 (12.25) | 463.6 (18.25) | 146.1 (5.75) | 38.1 (1.50) | 88.9 (3.50) | 4 | 40.8 (90) | AMH5 | AJBEW121806 |
| 431.8 (17.00) | 584.2 (23.00) | 282.7 (11.13) | 177.8 (7.00) | 400.1 (15.75) | 533.4 (21.00) | 358.9 (14.13) | 311.2 (12.25) | 463.6 (18.25) | 222.3 (8.75) | 38.1 (1.50) | 108.0 (4.25) | 4 | 45.8 (101) | AMH5 | AJBEW121808 |
| 425.5 (16.75) | 730.3 (28.75) | 282.7 (11.13) | N/A | 400.1 (15.75) | N/A | 466.9 (18.38) | 304.8 (12.00) | 609.6 (24.00) | 196.9 (7.75) | 25.4 (1.00) | 108.0 (4.25) | 4 | 62.6 (138) | AMH4 | AJBEW122408 |
| 425.5 (16.75) | 1035.1 (40.75) | 301.8 (11.88) | N/A | 400.1 (15.75) | N/A | 736.6 (29.00) | 304.8 (12.00) | 914.4 (36.00) | 196.9 (7.75) | 38.1 (1.50) | 115.8 (4.56) | 4 | 98.9 (218) | AMH5 | AJBEW123608 |
| 457.2 (18.00) | 1079.5 (42.50) | 265.2 (10.44) | 409.7 (16.13) | 301.8 (11.88) | 1035.1 (40.75) | 857.3 (33.75) | 346.2 (13.63) | 962.2 (37.88) | 155.7 (6.13) | 38.1 (1.50) | 109.5 (4.31) | 3-1/2 | 86.2 (190) | AMH8 | AJBEW133806 |
| 492.3 (19.38) | 492.3 (19.38) | 242.8 (9.56) | 247.7 (9.75) | 450.9 (17.75) | 450.9 (17.75) | 247.7 (9.75) | 374.7 (14.75) | 374.7 (14.75) | 146.1 (5.75) | 35.1 (1.38) | 98.6 (3.88) | 3-1/2 | 44.5 (98) | AMH8 | AJBEW141406 |
| 492.3 (19.38) | 492.3 (19.38) | 293.6 (11.56) | 247.7 (9.75) | 450.9 (17.75) | 450.9 (17.75) | 247.7 (9.75) | 374.7 (14.75) | 374.7 (14.75) | 196.9 (7.75) | 35.1 (1.38) | 101.6 (4.00) | 3 | 47.6 (105) | AMH8 | AJBEW141408 |
| 498.6 (19.63) | 736.6 (29.00) | 304.8 (12.00) | 333.5 (13.13) | N/A | 698.5 (27.50) | N/A | 378 (14.88) | 616.0 (24.25) | 203.2 (8.00) | 38.1 (1.50) | 101.6 (4.00) | 4 | 59.4 (131) | AMH6 | AJBEW142408 |
| 539.8 (21.25) | 1092.2 (43.00) | 306.3 (12.06) | 349.3 (13.75) | 508.0 (20.00) | 1057.4 (41.63) | 812.8 (32.00) | 397 (15.63) | 946.2 (37.25) | 189.0 (7.44) | 38.1 (1.50) | 133.4 (5.25) | 4 | 113.4 (250) | AMH8 | AJBEW153707 |
| 533.4 (21.00) | 533.4 (21.00) | 249.2 (9.81) | 279.4 (11.00) | 501.7 (19.75) | 501.7 (19.75) | 279.4 (11.00) | 419.1 (16.50) | 419.1 (16.50) | 146.1 (5.75) | 38.1 (1.50) | 98.6 (3.88) | 3-1/2 | 59.9 (132) | AMH8 | AJBEW161606 |
| 533.4 (21.00) | 533.4 (21.00) | 314.7 (12.39) | 279.4 (11.00) | 501.7 (19.75) | 501.7 (19.75) | 279.4 (11.00) | 419.1 (16.50) | 419.1 (16.50) | 212.9 (8.38) | 38.1 (1.50) | 124.0 (4.88) | 4 | 63.5 (140) | AMH8 | AJBEW161608 |
| 543.1 (21.38) | 593.9 (23.38) | 382.5 (15.06) | 304.8 (12.00) | 482.6 (19.00) | 533.4 (21.00) | 355.6 (14.00) | 412.8 (16.25) | 463.6 (18.25) | 301.8 (11.88) | 9.7 (0.38) | 177.8 (7.00) | 4 | 68.0 (150) | AMH8 | AJBEW161812 |
| 546.1 (21.50) | 693.7 (27.31) | 230.1 (9.06) | 330.2 (13.00) | 505.0 (19.88) | 641.4 (25.25) | 393.7 (15.50) | 417.6 (16.44) | 571.5 (22.50) | 146.1 (5.75) | 31.8 (1.25) | 84.1 (3.31) | 3 | 59.0 (130) | AMH8 | AJBEW162206 |
| 533.4 (21.00) | 711.2 (28.00) | 308.1 (12.13) | N/A | 501.7 (19.75) | N/A | 466.9 (18.38) | 412.8 (16.25) | 616.0 (24.25) | 209.6 (8.25) | 38.1 (1.50) | 134.9 (5.31) | 4 | 81.6 (180) | AMH6 | AJBEW162408 |
| 527.1 (20.75) | 831.9 (32.75) | 219.2 (8.63) | 330.2 (13.00) | N/A | 781.1 (30.75) | N/A | 412.8 (16.25) | 717.6 (28.25) | 146.1 (5.75) | 38.1 (1.50) | 79.5 (3.13) | 3 | 68.0 (150) | AMH5 | AJBEW162806 |
| 593.9 (23.38) | 593.9 (23.38) | 252.5 (9.94) | 330.2 (13.00) | 552.5 (21.75) | 552.5 (21.75) | 330.2 (13.00) | 463.6 (18.25) | 463.6 (18.25) | 146.1 (5.75) | 38.1 (1.50) | 104.9 (4.13) | 3-1/2 | 85.3 (188) | AMH8 | AJBEW181806 |

*◊ For Groups B and C, all conduits must be sealed within 50.8 mm (2") of the enclosure.*
*① Ordering a product with any ATEX Certification nulls the UL, CSA and cULus Certifications.*




© May 2017

# AJBEW Cast Junction Box Options and Accessories

## Explosionproof, Dust-Ignitionproof

*NEC/CEC:*
*Class I, Division 1 and 2, Groups B◊, C◊, D*
*Class I, Zone 1 and 2, Groups IIA, IIB◊+$H_2$◊*
*Class II, Division 1 and 2, Groups E, F, G*
*Class III*
*NEMA 4, 7B◊C◊D, 9EFG*

*ATEX/IECEx — Optional ①:*
*Zone 1 and 2 – 21 and 22*
*Ex II 2 GD*
*IP66 – IK10*

### Options

| Factory–Installed Suffix | Field–Installed Catalog Number | Description |
|---|---|---|
| AB | Not Available | Set of 4 standoffs 12.7 mm (0.50") high |
| BR | BRTB4X | Breather, NEMA 4X (includes outlets and installation) |
| DN | ECD50B4X | Drain, NEMA 4X (includes outlets and installation) |
| DP1 | AWG13/1CT | Desiccate package |
| EGS | EGSKIT | External grounding stud 3/8"-16 |
| G1 | Not Available | Gray powder coat epoxy (outside) |
| G2 | Not Available | Gray powder coat epoxy (inside and outside) |
| GNDKIT | | Internal Ground Stud, #14 - #2 |
| H | | Hinges stainless steel |
| | AHOF12SS | Hinge Kit, 2 light duty SS hinges |
| | AHOF22SS | Hinge Kit, 2 heavy duty SS hinges |
| | AHOF23SS | Hinge Kit, 3 heavy duty SS hinges |
| K | Not Available | Terminal blocks 600 Volt, 30 Amp *Indicate number of points: example: 5 points = 5K* |
| NP | Not Available | Plastic nameplate, 50.8 x 101.6 mm (2.00 x 4.00"), 3.3 mm (13") black letters on white surface, 3 lines max, specify legend. |
| Q | Not Available | SS captive Quad-Lead bolts |
| X | Not Available | ATEX Certification |
| XU | Not Available | ATEX Component Certification |
| Z | See table on following page | Mounting pan |

### Drill and Tap Options

*(For drill and tap schedule, Drilling and Tapping Guidelines)*

| Symbol | Conduit Size (NPT) Inches | Symbol | Conduit Size (NPT) Inches |
|---|---|---|---|
| A | 1/2 | F | 2 |
| B | 3/4 | G | 2-1/2 |
| C | 1 | H | 3 |
| D | 1-1/4 | J | 3-1/2 |
| E | 1-1/2 | K | 4 |

| Blind Tapped Holes | |
|---|---|
| Suffix | Screw Size |
| BT1 | #6 - 1/4" |
| BT2 | 5/16" - 1/2" |

### Mounting Hardware

*Refer to ordering information for Enclosure-Mounting Hardware Correlation.*

| Factory–Installed Suffix | Field–Installed Catalog Number | Description |
|---|---|---|
| MH1 | AMH1 | 1/4" - 20 x 1-1/4" Bolt, 1/4" - 20 Hex Nut, 1/4" Washers |
| MH2 | AMH2 | 3/8" -16 x 1-1/4" Bolt, 3/8" -16 Hex Nut, 3/8" Washers |
| MH3 | AMH3 | 7/16" - 14 x 1-3/4" Bolt, 7/16" - 14 Hex Nut, 7/16" Washers |
| MH4 | AMH4 | 1/2" - 13 x 1-3/4" Bolt, 1/2" - 13 Hex Nut, 1/2" Washers |
| MH5 | AMH5 | 1/2" - 13 x 2" Bolt, 1/2" - 13 Hex Nut, 1/2" Washers |
| MH6 | AMH6 | 5/8" - 11 x 2" Bolt, 5/8" - 11 Hex Nut, 5/8" Washers |
| MH7 | AMH7 | 1/2" - 13 x 1-1/4" Bolt, 1/2" - 13 Hex Nut, 1/2" Washers |
| MH8 | AMH8 | 5/8" - 11 x 1-1/4" Bolt, 5/8" - 11 Hex Nut, 5/8" Washers |

*◊ For Groups B and C, all conduits must be sealed within 50.8 mm (2") of the enclosure.*
*① Ordering a product with any ATEX Certification nulls the UL, CSA and cULus Certifications.*






© May 2017

# AJBEW Cast Junction Box Drilling and Tapping Guidelines

## Explosionproof, Dust-Ignitionproof

*NEC/CEC:*
*Class I, Division 1 and 2, Groups B◊, C◊, D*
*Class I, Zone 1 and 2, Groups IIA, IIB◊+$H_2$◊*
*Class II, Division 1 and 2, Groups E, F, G*
*Class III*
*NEMA 4, 7B◊C◊D, 9EFG*

*ATEX/IECEx — Optional ①:*
*Zone 1 and 2 – 21 and 22*
*(Ex) II 2 GD*
*IP66 – IK10*

### Dimensions — See Catalog Number Tables

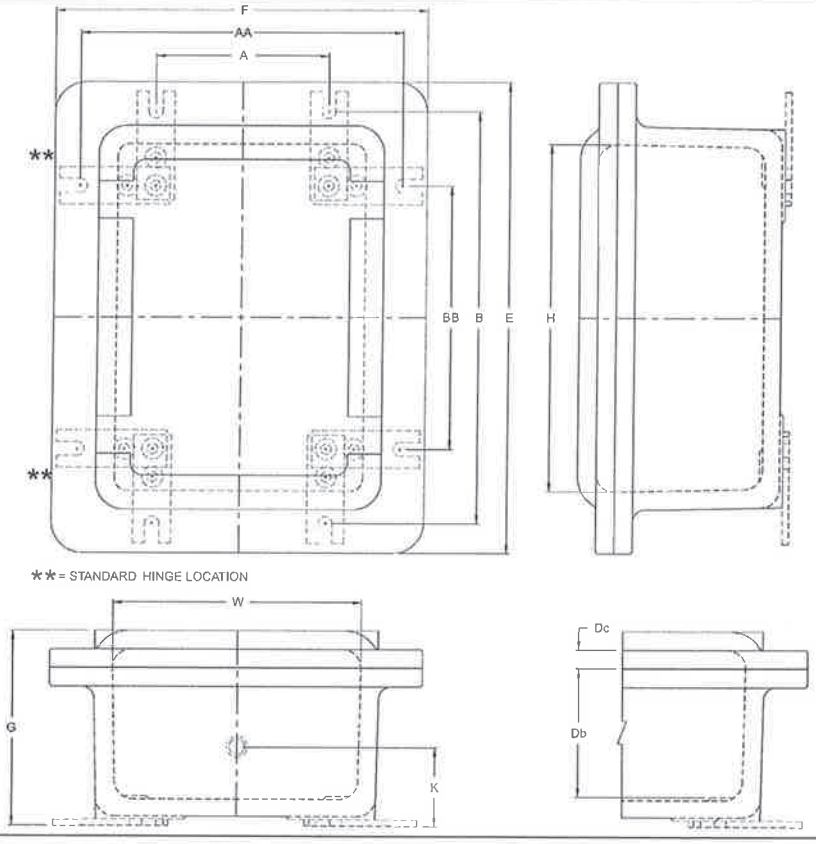


### Drilling and Tapping Guidelines

| Conduit Size (NPT) | Minimum Spacing For Conduit Centers in Millimeters (Inches) | | | | | | | | | |
|---|---|---|---|---|---|---|---|---|---|---|
| | 1/2 | 3/4 | 1 | 1–1/4 | 1–1/2 | 2 | 2–1/2 | 3 | 3–1/2 | 4 |
| 1/2 | 54.1 (2.13) | 54.1 (2.13) | 57.2 (2.25) | 66.8 (2.63) | 71.4 (2.81) | 79.5 (3.13) | 92.2 (3.63) | 101.6 (4.00) | 114.3 (4.50) | 114.3 (4.50) |
| 3/4 | 54.1 (2.13) | 54.1 (2.13) | 57.2 (2.25) | 66.8 (2.63) | 71.4 (2.81) | 79.5 (3.13) | 92.2 (3.63) | 101.6 (4.00) | 114.3 (4.50) | 114.3 (4.50) |
| 1 | 57.2 (2.25) | 57.2 (2.25) | 60.5 (2.38) | 71.4 (2.81) | 76.2 (3.00) | 82.6 (3.25) | 95.3 (3.75) | 104.9 (4.13) | 114.3 (4.50) | 117.6 (4.63) |
| 1-1/4 | 66.8 (2.63) | 66.8 (2.63) | 71.4 (2.81) | 79.5 (3.13) | 84.1 (3.31) | 92.2 (3.63) | 104.9 (4.13) | 114.3 (4.50) | 120.7 (4.75) | 127.0 (5.00) |
| 1-1/2 | 71.4 (2.81) | 71.4 (2.81) | 76.2 (3.00) | 84.1 (3.31) | 88.9 (3.50) | 96.8 (3.81) | 109.5 (4.31) | 117.6 (4.63) | 125.5 (4.94) | 133.4 (5.25) |
| 2 | 79.5 (3.13) | 79.5 (3.13) | 82.6 (3.25) | 92.2 (3.63) | 96.8 (3.81) | 104.9 (4.13) | 117.6 (4.63) | 127.0 (5.00) | 148.1 (5.83) | 146.1 (5.75) |
| 2-1/2 | 92.2 (3.63) | 92.2 (3.63) | 95.3 (3.75) | 104.9 (4.13) | 109.5 (4.31) | 117.6 (4.63) | 130.3 (5.13) | 84.1 (3.31) | 146.1 (5.75) | 155.7 (6.13) |
| 3 | 101.6 (4.00) | 101.6 (4.00) | 104.9 (4.13) | 114.3 (4.50) | 117.6 (4.63) | 127.0 (5.00) | 84.1 (3.31) | 146.1 (5.75) | 152.4 (6.00) | 158.8 (6.25) |
| 3-1/2 | 114.3 (4.50) | 114.3 (4.50) | 114.3 (4.50) | 120.7 (4.75) | 125.5 (4.94) | 136.7 (5.38) | 146.1 (5.75) | 152.4 (6.00) | 158.8 (6.25) | 165.1 (6.50) |
| 4 | 114.3 (4.50) | 114.3 (4.50) | 117.6 (4.63) | 127.0 (5.00) | 133.4 (5.25) | 146.1 (5.75) | 155.7 (6.13) | 158.8 (6.25) | 165.1 (6.50) | 171.5 (6.75) |

*◊ For Groups B and C, all conduits must be sealed within 50.8 mm (2") of the enclosure.*
*① Ordering a product with any ATEX Certification nulls the UL, CSA and cULus Certifications.*




© May 2017

Stantec to confirm:
- Installation location
- Installation details
- Probe lenghts
* Possible conflict with roof for installation of longer probes.
*HC, 2019-01-24*

4x units:
LSHH-03-112 ✓
LSLL-03-113 ✓
LSHH-03-122 ✓
LSLL-03-123 ✓

REVIEWED BY CONTRACTOR
Kudlik Construction Ltd
NAME: Sandra Rousseau P.Eng
DATE: Jan 30, 2019

NORCLAIR
MÉCANIQUE DE PROCÉDÉ

# SHOP DRAWINGS

**DA-IC-14 Vibronic level switch**

**Date :** 2019-01-24

| **Information general** | |
|---|---|
| Project : **WWTP UPGRADE - IQALUIT** | |
| Client : Kudlik Construction Ltd.<br>To : Sandra Rousseau P.Eng., Project Manager | Project number : **2018-062**<br>E-mail : srousseau@kudlik.biz |
| Contractor : **Norclair inc.** | Project number Norclair : **P1039** |
| Address : 1100, Mountain Masson, Laval, QC, Canada H7E 4P2 | |
| Project Manager : Hugo Chartier, Project Manager | E-mail: hchartier@norclair.ca |
| Phone : 450-688-4012 # 706 | Cell. : 514-703-0263 |

| **Information, subcontractor or supplier** | |
|---|---|
| Sub/supplier : Endress & Hauder | |
| Contact : Stéphane Raymond | Phone : 514-940-2288 |

| **Information on the equipment** | |
|---|---|
| Speciality : **Instrumentation and Control** | |
| Equipment : Vibronic level switch | |
| Drawing reference : | |
| Specification reference : 47 30 02 data sheets | Division : |
| Article : | Number of pages : 4 |

**CONSULTANT APPROVAL**

Installation Location: Level switches to be installed under the hatch above the tanks. See ISK-001 for location details.
Installation Detail: See attached engineering sketch ISK-001 for typical vibronic level switch detail. Each switch to have its own stand pipe.
Probe lengths: To be chosen such that LSLL-03-113 & LSLL-03-123 are 800mm above tank's bottom, and LSHH-03-112 & LSHH-03-122 are 3500mm above tank's bottom.

Ensure each instrument has appropriate amount of conduit fas. Contractor to power each instrument as necessary.

SHOP DRAWINGS ARE REVIEWED UNLESS NOTED OTHERWISE
REVIEWED AS MODIFIED ☒
REVISE & RESUBMIT ☐
SEAL & SIGNATURE REQUIRED ☐
Stantec
DATE February 8, 19
SIGNATURE Ellie Brion
REVIEW BY STANTEC IS FOR THE SOLE PURPOSE OF ASCERTAINING GENERAL CONFORMITY WITH DESIGN. CONTRACTOR IS RESPONSIBLE FOR DIMENSIONS, FABRICATION AND CONSTRUCTION METHODS, COORDINATION OF SUB-TRADES' DETAIL DESIGN OF COMPONENTS AND FOR OMISSIONS ON SHOP DRAWINGS.

1100, montée Masson
Laval, QC, Canada
H7E 4P2

Phone. : 450-688-4012
Fax : 450-661-6341
E-Mail : info@norclair.ca
www.norclair.ca

**Endress+Hauser**
People for Process Automation

| DRAWING NUMBER | 2002597302 | PROJECT | Iqaluit |
|---|---|---|---|
| | | | Norclair Inc. |

FTL51-C6UU0/0
FTL51-UAP2BB4E5A+Z1
**Liquiphant M FTL51**

Link to the product information:
www.ca.endress.com/FTL51

Point level/density, vibronic.
Extension tube.
Application: liquids.
Point level:
:: Millimeter precision switch point.
:: Application safety:
independent of liquid attribute,
independent of built up.
Density:
Continuous measurement.
:: Measure directly in the tank / pipe.
Certificate free, IS, NI, GP:Housing F17
Tag plate Stainless Steel 52006326

| | |
|---|---|
| ~~LSLL-02-122~~ | LSHH-03-112 |
| ~~LSH-02-213~~ | LSLL-03-113 |
| ~~LSH-02-214~~ | LSHH-03-122 |
| ~~LSH-02-223~~ | LSLL-03-123 |

| | |
|---|---|
| U | Approval: CSA C/US General Purpose |
| AP2 | Process Connection: NPS 4" Cl.150 RF, 316/316L flange ASME B16.5 |
| BB | Probe Length; Type: 3,000 mm; 316L, Ra<3.2um/126uin |
| 4 | Electronics; Output: FEL54;SIL relay DPDT 19-253VAC/19-55VDC |
| E5 | Housing; Cable Entry: F13 NEMA Type 4X/6P Encl. / F17 NEMA Type 4X Encl. Alu; NPT3/4 thread |
| A | Additional Option: Basic version |
| Z1 | >>Marking: Tagging (TAG), see additional spec. |

To be confirmed by Stantec for each unit


**1100 Montee Masson**
**Laval, Qc**
**H7E 4P2**

**Hugo Chartier**

Téléphone: **450-688-4012**
FAX **450-688-9123**
EMAIL hchartier@norclair.ca


SUPPLIER


Endress+hauser Canada Ltée
6800 Côte de liesse, suite 100
Ville Saint-Laurent, Québec, Canada
H4T 2A7

Téléphone: 514 733-0254 X2288
FAX 514 733-2924
EMAIL stephane.raymond@endress.com


| ISSUED BY | Stéphane Raymond |
|---|---|

| ISSUED PRODUCT | | DRAW.ISSUED FOR | |
|---|---|---|---|
| AS IS: | X | APPROUVAL: | X |
| Équivalent: | | Information: | |
| Substitution: | | Coordination: | |

ENGINEER APPROUVAL STAMP

| | Initiales | ISSUED DATE |
|---|---|---|
| | SR | December 18 2018 |
| | | |
| | | |
| | | |

Tag: ~~LSLL-02-122~~
~~LSH-02-213~~
~~LSH-02-214~~

LSHH-03-112
LSLL-03-113
LSHH-03-122
LSLL-03-123

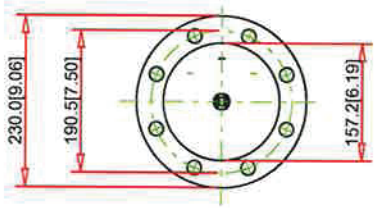


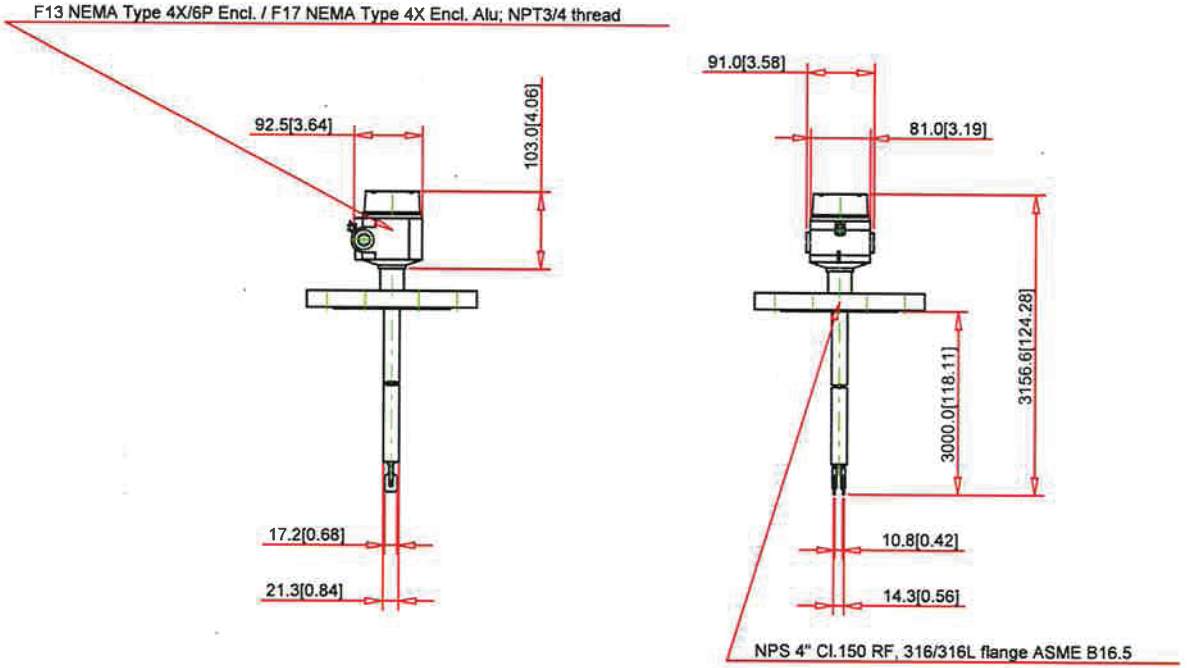


First Angle Projection

## Disclaimer:

To ensure the accuracy of the information contained in this document every reasonable effort has been made. Endress+Hauser may not make any warranties,express or implied, with respect to the accuracy, the completeness or the technical or commercial usefulness of this document. Endress+Hauser may modify or replace this document any time.

© 18.12.2018 Endress+Hauser

Order Code :
FTL51-UAP2BB4E5A+Z1

Product Description :
Liquiphant M FTL51

www.addresses.endress.com

Endress+Hauser

People for Process Automation

Endress+Hauser
People for Process Automation

| DRAWWING NUMBER | 2002597302 | PROJECT | Iqaluit |
|---|---|---|---|

ELECTRICAL CONNECTIONS

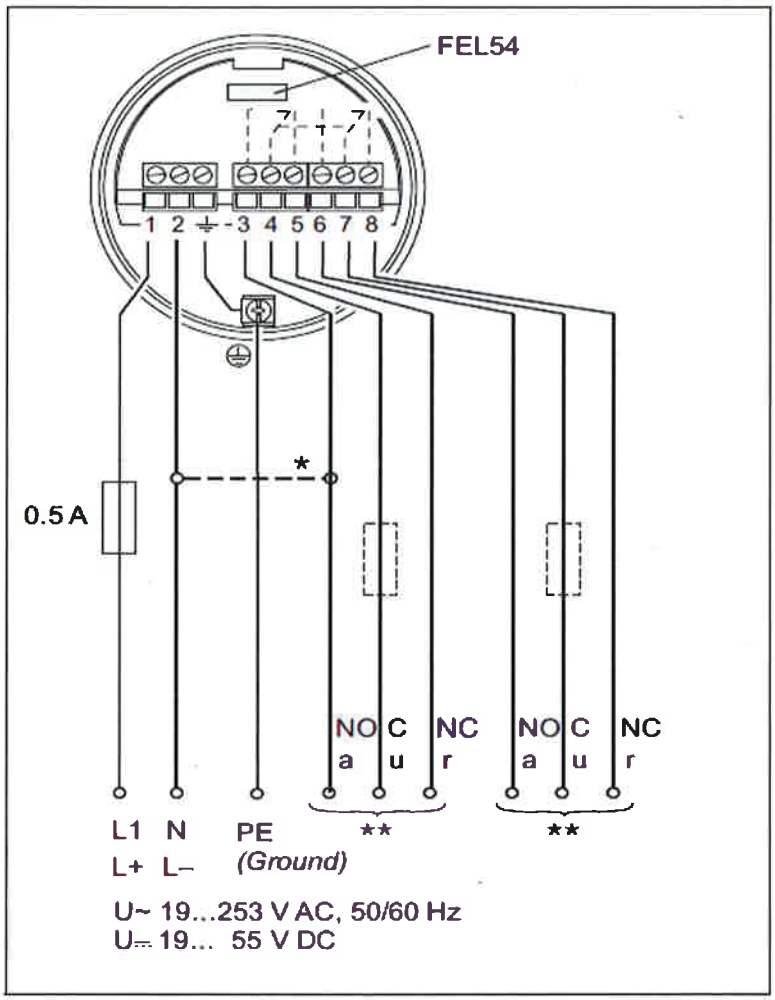


100-FTL5xxxx-04-05-xx-xx-002

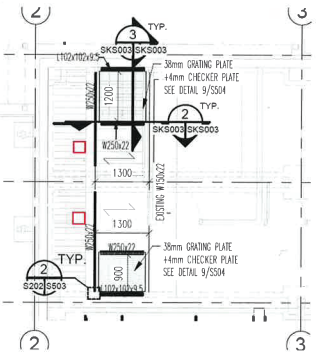


LEVEL INSTRUMENT PENETRATIONS
NO SCALE

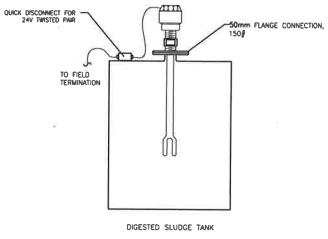


TYPICAL VIBRONIC LEVEL SWITCH INSTALLATION
NO SCALE

Consultants

Permit-Seal

NUNAMI
STANTEC LIMITED

1080C Nicole House
Iqaluit NU
www.stantec.com

The Contractor shall verify and be responsible for all dimensions. DO NOT scale the drawing - any errors or omissions shall be reported to Stantec without delay.
The Copyrights to all designs and drawings are the property of Stantec. Reproduction or use for any purpose other than that authorized by Stantec is forbidden.

Client/Project
Iqaluit

IQALUIT WASTEWATER TREATMENT PLANT
UPGRADE
City of Iqaluit, Nunavut

File Name: ISK-001

| Dwn | Chkd | Dsgn | 2017.10.05 YYJMMDD |
|---|---|---|---|

Title
INSTRUMENTATION
SKETCH

Project No. 110126045

Scale 1:75 0 750 2250 3750mm

Drawing No. ISK-001

Sheet of

Revision 0

ORIGINAL SHEET - ISO A1

C:\Users\jvanos\Desktop\ISK-001.dwg
2019/02/08 4:16 PM By: Ben, Elsa

# APPENDIX C

# MAINTENANCE SCHEDULE

**IQALUIT WWTP UPGRADE**
**ELECTRICAL EQUIPMENT MAINTENANCE SCHEDULE**

| EQUIPMENT | MAINTENANCE TASK | RECOMMENDED MAINTENANCE SCHEDULE |
|---|---|---|
| | | |
| **Emergency lighting systems** | Functional test | Monthly |
| **Fire alarm system** | Functional test | Annually |
| **Generator** | Functional test | Monthly |
| | | |
| | | |

**IQALUIT WWTP UPGRADE**
**INSTRUMENTATION MAINTENANCE SCHEDULE**

| AREA LOCATION | EQUIPMENT / TAG | MAINTENANCE TASK | RECOMMENDED MAINTENANCE SCHEDULE |
|---|---|---|---|
| | | | |
| **T-01-001 Influnet Pump Station Wet Well Instruments** | Level Switches (LSLL-01-111, LSL-01-112, LSH-01-113, LSHH-01-114) | No special maintenace required other than cleaning the bulbs to remove grease build up on the bulbs. | As required. |
| | Level Element (LE-01-100) | Normally, the transducer requires no cleaning or maintenance. However, if performance changes are observed, immediately shut down the level measurement system and perform a thorough inspection, especially on the transducer. | As required. |
| | Level Transmitter (LIT-01-100) | SITRANS LUT400 requires no maintenance or cleaning under normal operating conditions. However, the following can be completed: firmware update, replace batter. See manuel for more details. | Battery has a life expectancy of 10 years. |
| | Flow Meter (FQIT-01-150) | No special maintenance work is required. Cleaning the exterior of the device is a good practice. | As required. |
| **Fine Screens SCRN-01-210/220** | Solenoid Valves (SV-01-120, SV-01-122, SV-01-124, SV-01-126) | * | |
| | Level Elements (LE-01-211, LE-01-221) | * | |
| | Level Transmitters (LIT-01-211, LIT-01-221) | * | |
| | Motorized Valve Actuators (FV-01-211, FV-01-221, FV-01-112, FV-01-112A) | * | |
| **Primary Filters PF-01-310/320** | Motorized Valve Acutaors (FV-01-111, FV-01-121, FV-01-001) | * | |
| | Solenoid Valves (SV-01-312, SV-01-322, SV-01-113, SV-01-313, SV-01-323, SV-01-123) | * | |
| | Level Element (LE-01-115, LE-01-125) | * | |
| | Level Transmitter (LIT-01-115, LIT-01-125) | * | |
| | Pressure Transmitter (PT-01-116, PT-01-126) | * | |
| **Process Aeration Blowers B-02-110/120/130** | Pressure Switch (PSL-02-108, PSL-02-143, PSL-02-146, PSH-02-118, PSH-02-128, PSH-02-138) | * | |
| | Pressure Transmitter (PT-02-195) | Keep the pressure compensation and GORE-TEX® filter (1) free from contamination. Cleaning the exterior of the device is a good practice. Clean diaphragm with clean cloth if build-up is noticed. | As required or if a change in measurement is noted. |
| | Thermal Mass Flow Meters (FQIT-02-152, FQIT-02-156, FQIT-02-172) | Clean sensor by applying a non-filming or oil-free type cleaning fluid to a soft brush or cloth and gently wiping over the surf | Sensor to be cleaned periodicaly at first, and schedule to be confirmed depending of impurities. |
| **MBBR T-02-210/220** | Motorized Valve Acutaors (FV-02-211, FV-02-221) | * | |
| | Level Switches (LSH-02-213, LSH-02-214, LSH-02-223, LSH-02-224) | * | |
| | DO Elemet (AE-02-211, AE-02-212, AE-02-221, AE-02-222) | Clean sensor, Replacing wear and tear materials (sealing ring, electrolyte, membrane cap) as necessary | Monthly |
| | DO Transmitter (AIT-02-211, AIT-02-212, AIT-02-221, AIT-02-222) | Recalibration, Check the measuring function | Monthly |
| **DAF T-02-310/320** | Motorized Valve Acutaors (FV-02-625, FV-02-645, FV-02-309, FV-02-310, FV-02-329, FV-02-330) | * | |
| | Motorized Valve Acutaors (FV-02-312, FV-02-332) | * | |
| | Level Switches (LSH-02-330, LSH-02-340, LSH-02-332, LSH-02-342, LSL-02-333, LSL-02-343) | * | |
| | TSS Element (AE-02-334, AE-02-344) | * | |
| | TSS Transmitter (AIT-02-334, AIT-02-344) | * | |
| | Level Element (LE-02-331, LE-02-341) | * | |
| | Level Transmitter (LIT-02-331, LIT-02-341) | * | |
| **DAF White Water Strainers STR-02-530/540** | Magnetic Flow Meter (FIT-02-317, FIT-02-327) | See Veolia O&M | |
| | Motorized Valve Acutaors (FV-02-511, FV-02-512, FV-02-521, FV-02-522, FV-02-531, FV-02-532, FV-02-541, FV-02-542) | See Veolia O&M | |
| | Pressure Transmitter (PT-02-527, PT-02-547) | See Veolia O&M | |
| **DAF Polymer PDS-04-700** | Solenoids (SV-04-713, SV-04-714) | * | |
| | Pressure Switch (PSL-04-711) | * | |
| | Level Switch (LSL-04-710) | * | |
| | Level Transmitter (LIT-04-742, LIT-04-746) | * | |
| | Polymer Transmitter (AIT-04-741. AIT-04-745) | * | |
| **DAF Polymer Dosing P-04-770/780/790** | Solenoids (FV-04-783, FV-04-784) | * | |
| | Pressure Switch (PSH-04-787, PSH-04-790, PSH-04-793) | * | |
| | Flow Meter (FIT-04-798, FIT-04-799) | No special maintenance work is required. Cleaning the exterior of the device is a good practice. | As required. |
| **TWAS Tanks T-03-630/640** | Pressure Switch (PSH-04-639, PSH-02-639) | * | |
| | Vibronic Level Switches (LSLL-03-113, LSLL-03-123, LSHH-03-112, LSHH-03-122) | Complete visual inspection and clean-up build-up on the sensor with water. | As required or when measuring device becomes faulty. |
| | Level Element (LE-03-111, LE-03-121) | Normally, the transducer requires no cleaning or maintenance. However, if performance changes are observed, immediately shut down the level measurement system and perform a thorough inspection, especially on the transducer. | As required. |
| | Level Transmitter (LIT-03-111, LIT-03-121) | The unit requires no maintenance or cleaning under normal operating conditions. | -- |
| **BFP-03-650** | Pressure Switch (PSH-03-668, PSH-03-389) | * | |
| | Flow Meter (FIT-03-695) | No special maintenance work is required. Cleaning the exterior of the device is a good practice. | As required. |
| | Pressure Transmitter (PIT-03-606) | Keep the pressure compensation and GORE-TEX® filter (1) free from contamination. Cleaning the exterior of the device is a good practice. Clean diaphragm with clean cloth if build-up is noticed. | As required or if a change in measurement is noted. |
| **BFP Polymer PSD-04-900** | Solenoids (SV-04-913, SV-04-914) | * | |
| | Pressure Switch (PSL-04-911) | * | |
| | Level Switch (LSL-04-910) | * | |
| | Level Transmitter (LIT-04-942, LIT-04-946) | * | |
| | Polymer Transmitter (AIT-04-941. AIT-04-945) | * | |
| **BFP Polymer Dosing P-04-970/980** | Solenoids (FV-04-982) | * | |
| | Pressure Switch (PSH-04-987, PSH-04-990) | * | |
| | Flow Meter (FIT-04-999) | No special maintenance work is required. Cleaning the exterior of the device is a good practice. | As required. |
| **Building** | Gas Detection (AIT-900 series) | * | See Norclair O&M for cleaning instructions |
| | Tempertaure Transmitter (TT-940 series) | * | |
| | Smoke Detectors | * | |
| | Strobes and Horns | * | See Norclair O&M for cleaning instructions |

***Note: Refer to Supplier Operation & Maintenance Manuals for more detailed information on equipment maintenance schedule.**

# APPENDIX D

# EQUIPMENT MAINTENANCE AND OPERATION MANUALS

SEE SUPPLIER O&M MANUAL (NORCLAIR AND VEOLIA)
FOR INSTRUMENTATION AND CONTROL EQUIPMNET
OPERATIONS AND MAINTENANCE MANUAL

**Date: Dec 10, 2018**

# Transmittal

**Arctic Electrical Nunavut Ltd**
PO Box 1381
Iqaluit, Nu.
X0A 0H0
Phone: 867-975-3494
**From: Lee Pitcher**

**Project** **Waste Waste Treatment Plant**
**Location** Iqaluit NU
**To** Kudlik Construction
Contact: Sandra Rousseau P.Eng.
srousseau@kudlik.biz



SE-13

Attached are the following items:

- [ ] Drawings
- [ ] Prints
- [ ] Plans
- [ ] Specifications
- [x] Information
- [ ] Submittals

Other:

THESE ARE TRANSMITTED FOR:

- [ ] Prior Approval
- [x] Approval
- [ ] Approval as Submitted
- [ ] Approval as Noted
- [ ] Resubmittal for Approval
- [ ] Corrections
- [ ] Your Use
- [ ] Review and Comment
- [ ] Record

Bids due on:
Other:

| Qty | Type | MFG | Part |
|---|---|---|---|

OM Manual-Preliminary

**Notes:**
Please review the attached approval drawings carefully. Production cannot be scheduled until a signed copy of the final approved drawing are received. Be aware that once drawings are approved, any errors due to incorrect information are the responsibility of the client.

Do not hesitate to contact me if you have any questions or concerns.

Arctic Electrical Nunavut Ltd
PO Box 1381, Iqaluit, NU X0A 0H0 -P867-975-3494

**Warranty**

**Training**

**Testing**

**Permits**

**List of Suppliers**

**26 05 21 – Wires and Cables (0-1000V)**

**26 05 36 – Cable Trays for Electrical Systems**

**26 12 17 – Dry Type Transformers up to 600V Primary**

**26 24 01 – Service Equipment**

**26 24 17 – Panelboards Breaker Type**

**26 24 19 – Motor Control Centres**

**26 29 23 – Variable Frequency Motor Controllers**

**26 32 14 – Power Generation Diesel**

**26 36 23 – Automatic Transfer Switch**

**26 50 00 – Lighting**

**26 52 01 – Unit Equipment for Emergency Lighting**

**26 53 00 – Exit Signs**

**28 16 05 – Intrusion Detection**

**28 31 01 – Fire Alarm Systems**




PO Box 1381, Iqaluit, NU X0A 0H0 -P867-975-3494

# Warranty

Arctic Electrical Nunavut Ltd

PO Box 1381, Iqaluit, NU X0A 0H0 -P867-975-3494

# ARCTIC ELECTICAL NUNAVUT LTD.

## LETTER OF WARRANTY

FOR

WASTEWATER TREATMENT PLANT UPGRADE

IQALUIT, NUNAVUT

The control system and electrical installation has been tested and found to be in proper working condition at the time of turnover, and it is guaranteed to be free from any defect in workmanship and material that may develop within a one-year period from date of acceptance.

Any parts or parts of the control system and electrical installation, as defined in the Control System and Electrical Specification, that prove defective within one-year period shall be replaced without charge, when subjected to examination by one of our representatives and, in our opinion, is due to faulty material or workmanship and not caused by tampering, abuse, or misapplication.

This warranty is limited to Divisions 26 and 28 materials and associated equipment, and in no event shall Arctic Electrical Nunavut Ltd. have any liability for consequential damages, expenses or lost revenue due an electrical system failure. Any alterations to the system without the expressed written consent from Arctic Electrical Nunavut Ltd. will render this warranty null and void.

Arctic Electrical Nunavut Ltd.




PO Box 1381, Iqaluit, NU X0A 0H0 -P867-975-3494

# Training

Arctic Electrical Nunavut Ltd

**System:** Automatic Transfer Switch

**System Operation Training**

The operation of the Automatic Transfer switch has been demonstrated to the local maintainer. This includes, but not limited to:

1. An overview of the entire system and location of all devices.
2. How to operate the system.
3. How to open, shutdown and reset the system for troubleshooting

**Trained By:** Tim Rex **Date:** Mar/14/19

I verify that I have been trained and understand my training on the System

| Name: | Date: |
|---|---|
| Maria Karveli [signature] | March 14, 2019 |
| Eric Munger [signature] | 14 MARS 2019 |
| [signature] | |
| | |
| | |
| | |
| | |
| | |
| | |
| | |
| | |
| | |
| | |
| | |
| | |

Arctic Electrical Nunavut Ltd

**System:** _____

**System Operation Training**

The operation of the Generator has been demonstrated to the local maintainer. This includes, but not limited to:

1. An overview of the entire system and location of all devices.
2. How to operate the system.
3. How to open, shutdown and reset the system for troubleshooting

**Trained By:** Tim Rex **Date:** Mar/14/19

I verify that I have been trained and understand my training on the System

| Name: | Date: |
|---|---|
| Maria Karveli | March 14, 2019 |
| Eric Mueller | 14 MARS, 2019 |
| ERIC [illegible]NON | |
| | |
| | |
| | |
| | |
| | |
| | |
| | |
| | |
| | |
| | |
| | |

Arctic Electrical Nunavut Ltd

**System:** _____

**System Operation Training**

The operation of the Main Distribution has been demonstrated to the local maintainer. This includes, but not limited to:

1. An overview of the entire system and location of all devices.
2. How to operate the system.
3. How to open, shutdown and reset the system for troubleshooting

**Trained By:** Tim Rex **Date:** Mar/14/19

I verify that I have been trained and understand my training on the System

| Name: | Date: |
|---|---|
| Maria Karvelis | March 14, 2019 |
| Eric Mumber | 14 MARS 2019 |
| ERIC [illegible] | |
| | |
| | |
| | |
| | |
| | |
| | |
| | |
| | |
| | |
| | |
| | |
| | |

Arctic Electrical Nunavut Ltd

**System:** _____

**System Operation Training**

The operation of the MCC has been demonstrated to the local maintainer.
This includes, but not limited to:

1. An overview of the entire system and location of all devices.
2. How to operate the system.
3. How to open, shutdown and reset the system for troubleshooting

**Trained By:** Tim Rex **Date:** Mar/14/19

I verify that I have been trained and understand my training on the System

| Name: | Date: |
|---|---|
| Maria Karveli | March 14, 2019 |
| ERIC MUNGER | MARS 14 2019 |
| ERIC GAGNON | MARS 14 2019 |
| | |
| | |
| | |
| | |
| | |
| | |
| | |
| | |
| | |
| | |
| | |
| | |

Arctic Electrical Nunavut Ltd
PO Box 1381, Iqaluit, NU X0A 0H0 -P867-975-3494

# Testing

Arctic Electrical Nunavut Ltd

PO Box 1381, Iqaluit, NU X0A 0H0 -P867-975-3494

# Permits

26-Jul-2018

# Government of Nunavut

## Department of Community and Government Services

| Baffin Region | Kivalliq Region | Kitikmeot Region |
|---|---|---|
| P.O. Box 1000 Station 610<br>Iqaluit, NU<br>X0A 0H0<br>Phone: (867) 975-5423<br>Fax: (867) 975-5453 | Bag 002<br>Rankin Inlet, NU<br>X0C 0G0<br>Phone: (867) 645-8179<br>Fax: (867) 645-8196 | Bag 200<br>Cambridge Bay, NU<br>X0B 0C0<br>Phone: (867) 983-4157<br>Fax: (867) 983-4152 |

# PERMIT FOR WIRING INSTALLATION

**FOR USE BY QUALIFIED ELECTRICAL WORKERS**

**Permit Type:** multi/commercial/industrial **Application Date:** 26-Jul-2018

### LOCATION

**Community:** Iqaluit **Location:** Waste Water Treatment Plant **Lot:** **Block:**

### OWNER

**Name:** City of Iqaluit, Eslam Maher **Address:** Iqaluit, Nu X0A0H0 **Phone:** (613) 216-4345 ext **Fax:**

### INSTALLATION DETAILS

**Construction Type:** Addition Service Rating **Phase:** 3Phase
**Plan Review # :** RJK **Voltage:** 347/600
**Power Connection Required:** YES **Amperes:** 400
**Work Description:** Rewiring of Waste Water Plant

### ELECTRICIAN

**Name:** Colin Molloy
**#:** E-0090 **Expiry:** 27-Oct-2018
**Company:** Arctic Electrical **Phone:** (867) 975-3494 ext
**Address:** Box 1381, Iqaluit, NU **Postal:** X0A 0H0 **Fax:** (867) 979-2496

| | |
|---|---|
| **Cost of Installation** (Includes labour, travel, room _board) | **$610,000.00** |
| **Permit Fee** | **$12,852.00** |

I (We) propose to install electrical wiring, apparatus, fittings or alterations, the particulars of which are set out above and hereby certify that this installation will be completed in accordance with the Canadian Electrical Code and Territorial Electrical Protection Act

### OFFICE USE ONLY

**PERMISSION IS HEREBY GRANTED TO DO THE ABOVE WORK PROVIDED IT IS COMMENCED BY Wednesday October 24, 2018 AND COMPLETED NO LATER THAN Friday July 26, 2019**

| | |
|---|---|
| **RECEIPT No.** | **GRN3650965** |
| **PERMIT No.** | **10186** |

Issued By: Jessie Nikki — Issue Date: July 26, 2018

July 26, 2018

30-Jul-2018

# Government of Nunavut

## Department of Community and Government Services


| Baffin Region | Kivalliq Region | Kitikmeot Region |
|---|---|---|
| P.O. Box 1000 Station 610<br>Iqaluit, NU<br>X0A 0H0<br>Phone: (867) 975-5423<br>Fax: (867) 975-5453 | Bag 002<br>Rankin Inlet, NU<br>X0C 0G0<br>Phone: (867) 645-8179<br>Fax: (867) 645-8196 | Bag 200<br>Cambridge Bay, NU<br>X0B 0C0<br>Phone: (867) 983-4157<br>Fax: (867) 983-4152 |


# ELECTRICAL INSPECTION REPORT

**PERMIT: 10186**

**INSTALLATION**

**Location**

Community: Iqaluit
Street: Waste Water Treatment Plant
Lot: Block:
Owner: CITY OF IQALUIT, Eslam Maher
Phone: (613) 216-4345 ext:
Fax:

**Permit**

PermitType: multi/commercial/industrial
Amperes: 400
Voltage: 347/600

**Contractor**

Name: Colin Molloy
#: E-0090
Company: Arctic Electrical
Address: Box 1381
Iqaluit, NU
Postal: X0A 0H0

**INSPECTION**

Date: 30-Jul-2018
Type: Power
Corrections Due By:
Inspector: Rick Kelly
Outcome: Not Complete
Fee: NO

**DEFICIENCIES**

| CEC Section | Details | Status | Date |
|---|---|---|---|
| 3-002 | Power connection approval is granted | Open | 30-Jul-2018 |

Please sign and return corrected deficiencies by the date listed above _____

Contractor Signature

10-Dec-2018

# Government of Nunavut

## Department of Community and Government Services


| Baffin Region | Kivalliq Region | Kitikmeot Region |
|---|---|---|
| P.O. Box 1000 Station 610 | Bag 002 | Bag 200 |
| Iqaluit, NU | Rankin Inlet, NU | Cambridge Bay, NU |
| X0A 0H0 | X0C 0G0 | X0B 0C0 |
| Phone: (867) 975-5423 | Phone: (867) 645-8179 | Phone: (867) 983-4157 |
| Fax: (867) 975-5453 | Fax: (867) 645-8196 | Fax: (867) 983-4152 |


# ELECTRICAL INSPECTION REPORT

**PERMIT: 10186**

## INSTALLATION

**Location**

Community: Iqaluit
Street: Waste Water Treatment Plant
Lot: Block:
Owner: CITY OF IQALUIT, Eslam Maher
Phone: (613) 216-4345 ext:
Fax:

**Permit**

PermitType: multi/commercial/industrial
Amperes: 400
Voltage: 347/600

**Contractor**

Name: Colin Molloy
# E-0090
Company: Arctic Electrical
Address: Box 1381 Iqaluit, NU
Postal: X0A 0H0

## INSPECTION

Date: 30-Jul-2018
Type: Power
Corrections Due By:
Inspector: Rick Kelly
Outcome: Not Complete
Fee: NO

## DEFICIENCIES

| CEC Section | Details | Status | Date |
|---|---|---|---|
| 3-002 | Power connection approval is granted | Corrected | 30-Jul-2018 |

Please sign and return corrected deficiencies by the date listed above _____
Contractor Signature




PO Box 1381, Iqaluit, NU X0A 0H0 -P867-975-3494

# List of Suppliers

# ARCTIC ELECTICAL NUNAVUT LTD.

## LIST OF SUPPLIERS

FOR

WASTEWATER TREATMENT PLANT UPGRADE

IQALUIT, NUNAVUT

**Power Load Bank & Automatic Transfer Switch**
Frontier Power Products Ltd.
9204 – 37 Avenue
Edmonton, AB T6E 5L4
Contact: Will Osburn
P. 780-733-6427
F. 780-451-5469

**Distribution & Emergency Lighting**
Nedco – Rexel Group
130 Collins Street, R.R. #6
Perth, ON K7H 3C8
Contact: Murray Tulloch
P. 613-267-3560
F. 613-267-5546

**Lighting**
Guillevin International – Ottawa Branch
175 Richmond Road
Ottawa, ON K1Z 6W3
Contact: Robert Pollock
P. 613-880-5260
F. 613-722-0596

**Fire Alarm & Security Systems**
Chubb Edwards
8205 Boulevard du Golf
Anjou, QC H1J 0B2
Contact: Eric Genest
P. 514-826-3762
F. 514-328-7693

Arctic Electrical Nunavut Ltd
PO Box 1381, Iqaluit, NU X0A 0H0 -P867-975-3494

# 26 05 21 - Wires and Cables (0-1000V)

**Date: Jan 21, 2019**

REVIEWED BY CONTRACTOR
Kudlik Construction Ltd.
NAME: Sandra Rousseau P.Eng
DATE: Jan 21, 2019

# Transmittal

**Arctic Electrical Nunavut Ltd**
PO Box 1381
Iqaluit, Nu.
X0A 0H0
Phone: 867-975-3494
**From: Lee Pitcher**

**Project** **Waste Waste Treatment Plant**
**Location** Iqaluit NU
**To** Kudlik Construction
Contact: Sandra Rousseau P.Eng.
srousseau@kudlik.biz



SE-14
PO-Guillevin-Quote-1135711

Attached are the following items:

- [ ] Drawings
- [ ] Prints
- [ ] Plans
- [x] Specifications
- [ ] Information
- [ ] Submittals

Other:

THESE ARE TRANSMITTED FOR:

- [ ] Prior Approval
- [x] Approval
- [ ] Approval as Submitted
- [ ] Approval as Noted
- [ ] Resubmittal for Approval
- [ ] Corrections
- [ ] Your Use
- [ ] Review and Comment
- [ ] Record

Bids due on:
Other:

| Qty | Type | MFG | Part |
|---|---|---|---|

26 05 21 Wires and Cables (0-1000 V)-Fire Alarm Cable

STANTEC PROJECT #: 110126045
SUBMITTAL # ELE-014

This review by Stantec is for general conformance with the design concept of Stantec's design of the:
- [ ] Architectural
- [ ] Structural
- [ ] Mechanical
- [x] Electrical
- [ ] Other

component(s) only and does not mean that Stantec has verified or approves the shop drawing(s). The Contractor remains solely responsible for the shop drawing(s) and this review by Stantec does not relieve the Contractor of the Contractor's responsibility for errors or omissions in the shop drawing(s) or for meeting all requirements of the contract documents. This review does not mean that Stantec approves the detailed design inherent in the shop drawing, responsibility for which shall remain with the Contractor submitting same, nor does this review mean that Stantec accepts any deviation of the shop drawing(s) from the contract documents. The Contractor is responsible for confirming all dimensions and correlating them at the job site, for all construction means, methods and techniques, and for coordination of construction work of all trades, including coordination of all shop drawings.

Stantec

- [ ] REVIEWED
- [x] REVIEWED, AS NOTED
- [ ] REVISE AND RESUBMIT
- [ ] NOT REVIEWED

DATE 2019-01-24
BY Konrad Goluch

Minimum wire size as spec 26 05 21 2.4.2.4

**Notes:**
Please review the attached approval drawings carefully. Production cannot be scheduled until a signed copy of the final approved drawing are received. Be aware that once drawings are approved, any errors due to incorrect information are the responsibility of the client.

Do not hesitate to contact me if you have any questions or concerns.

Deca Cables Inc.
150 North Murray Street
P.O. Box 777
Trenton, Ontario K8V 5W6
Canada

Website: www.decacables.com
Telephone: (613) 392-3585
Facsimile: (613) 392-7908
Email: sales@decacables.com

**ISO 9001:2008**

# PRODUCT DATA SHEET

# Part No: 32-1805

## CONSTRUCTION SPECIFICATIONS

| | |
|---|---|
| **Description** | FIRE ALARM 5C 18 AWG UNSH AIA 300V |
| **Conductor** | 18 AWG Solid Bare Copper |
| **Conductor Diameter** | 0.0403" |
| **Insulation Type** | Semi Rigid PVC |
| **Insulation Thickness** | .015" |
| **Conductor Identification** | Black, Red, Green, Blue, Brown |
| **Cable Assembly** | Conductors are cabled together. A PVC jacket is applied over the cabled assembly. An aluminum armour is applied over the inner jacket. An outer PVC jacket is applied over the aluminum armour. |
| **Ripcord** | Polyester Ripcord included under the inner jacket |
| **Inner Jacket** | 0.020" (minimum average), Flame Retardant Red PVC |
| **Armour Type** | Interlocked Aluminum Armour |
| **Outer Jacket** | 0.045" (minimum average), Flame Retardant Red PVC |
| **Overall Cable Diameter** | 0.509" |
| **Jacket Print** | "DECAGUARD" 5C18AWG 105C CSA FAS105 FT4 300V AIA SUN RES LL81646 ---- ROHS work order #, month, year, metre markings (every 1 metre) |

## ELECTRICALS

| | | |
|---|---|---|
| **Voltage** | 300V | |
| **Conductor Resistance** | 6.39 | Ohms/Mft @20C |

## CERTIFICATIONS AND PHYSICAL PROPERTIES

| | | |
|---|---|---|
| **CSA Certified** | *CSA C22.2 No.208 Fire Alarm and Signal Cable | |
| **Flame Test Rating** | CSA FT4 | |
| **Temperature Rating** | 105C | |
| **ROHS** | Compliant | |
| **Cable Weight** | 184 | kg/km |
| **Copper Content** | 37 | kg/km |
| **Max Pull Tension** | 41 | kgs |
| **Min Bending Radius** | 6.25 | inches (installed) |
| **Max Cable Length** | 8475 | metres |

Arctic Electrical Nunavut Ltd
PO Box 1381, Iqaluit, NU X0A 0H0 -P867-975-3494

# 26 36 05 Cable Trays for Electrical Systems

**Date: July 11, 2018**

REVIEWED BY CONTRACTOR
Kudlik Construction Ltd
NAME: Sandra Rousseau P.Eng
DATE: Jul 11, 2018

# Transmittal

**Arctic Electrical Nunavut Ltd**
PO Box 1381
Iqaluit, Nu.
X0A 0H0
Phone: 867-975-3494
**From: Lee Pitcher**

**Project** **Waste Wate Treatment Plant**
**Location** Iqaluit NU
**To** Kudlik Construction
Contact: Sandra Rousseau P.Eng.
srousseau@kudlik.biz



SE-10
PO-P18-162

Attached are the following items:

- [x] Drawings
- [ ] Prints
- [ ] Plans
- [x] Specifications
- [ ] Information
- [ ] Submittals

Other:

THESE ARE TRANSMITTED FOR:

- [ ] Prior Approval
- [x] Approval
- [ ] Approval as Submitted
- [ ] Approval as Noted
- [ ] Resubmittal for Approval
- [ ] Corrections
- [ ] Your Use
- [ ] Review and Comment
- [ ] Record

Bids due on:
Other:

| Qty | Type | MFG | Part |
|---|---|---|---|

Section 26 05 36 Cable Trays for Electrical Systems

STANTEC PROJECT #: 110126045
SUBMITTAL # ELE-010

This review by Stantec is for general conformance with the design concept of Stantec's design of the:

- [ ] Architectural
- [ ] Structural
- [ ] Mechanical
- [x] Electrical
- [ ] Other

component(s) only and does not mean that Stantec has verified or approves the shop drawing(s). The Contractor remains solely responsible for the shop drawing(s) and this review by Stantec does not relieve the Contractor of the Contractor's responsibility for errors or omissions in the shop drawing(s) or for meeting all requirements of the contract documents. This review does not mean that Stantec approves the detailed design inherent in the shop drawing, responsibility for which shall remain with the Contractor submitting same, nor does this review mean that Stantec accepts any deviation of the shop drawing(s) from the contract documents. The Contractor is responsible for confirming all dimensions and correlating them at the job site, for all construction means, methods and techniques, and for coordination of construction work of all trades, including coordination of all shop drawings.

Stantec

- [ ] REVIEWED
- [x] REVIEWED, AS NOTED
- [ ] REVISE AND RESUBMIT
- [ ] NOT REVIEWED

DATE 2018-07-30
BY Konrad

**Notes:**
Please review the attached approval drawings carefully. Production cannot be scheduled until a signed copy of the final approved drawing are received. Be aware that once drawings are approved, any errors due to incorrect information are the responsibility of the

Responsibility remains with the contractor as per the contract documents.

Do not hesitate to contact me if you have any questions or concerns.

# Engineering Cable Tray Specification (cont'd)

## Table 3

Steel Load / Span Class Designation

| Side Rail Height (in.) | Series | Load Depth (in.) Nominal | NEMA Class | CSA Class |
|---|---|---|---|---|
| 3-5/8 | SH13/SP13/SS13 | 2-5/8 | 12A | C/3m |
| 4 | SH14/SP14/SS14<br>SH34/SP34/SS34 | 3 | 12C<br>20A | D/3m<br>D/6m |
| 5 | SH25/SP25/SS25<br>SH45/SP45/SS45<br>SH55/SP55 | 4 | 20A<br>20B<br>20C | D/6m<br>E/6m |
| 6 | SH16/SP16/SS16<br>SH36/SP36/SS36<br>SH46/SP46/SS46 | 5 | 20A<br>20B<br>20C | D/6m<br>E/6m<br>– |
| 7 | SH37/SP37/SS37 | 6 | 20C | – |

**Must Confirm Class of Tray Required-Quoted Series 1

# Straight Lengths

## 6 in. Straight Sections
## Series 1-6, 3-6, 4-6

**Ladder, ventilated and solid trough**

## Straight Section Number Selection P/N- SH1624L12-3

**SH3624L12-6**

| Material Prefix | Series | Side Rail Height | Width | Bottom Type | Length |
|---|---|---|---|---|---|
| SP • Pregalvanized<br>SH • Hot-dipped galvanized after fabrication<br>SS • Stainless Steel 316 | 1 • Series 1<br>3 • Series 3<br>4 • Series 4 | 6 • (6 in.) | 06 • (6 in.)<br>09 • (9 in.)<br>12 • (12 in.)<br>18 • (18 in.)<br>24 • (24 in.)<br>30 • (30 in.)<br>36 • (36 in.)<br>42 • (42 in.) | L06 • 6 in. rung spacing<br>L09 • 9 in. rung spacing<br>L12 • 12 in. rung spacing<br>V • Ventilated **<br>S • Solid trough | 3 • (3 meters)<br>6 • (6 meters)<br>144 • (12 ft.)<br>288 • (24 ft.) |

** For load ratings of CSA Class C/NEMA 8C or less, please see an alternative ventilated series of cable tray called - One-Piece found on pages A160 to A191 of this catalogue.

## Technical Specifications

All calculations and data are based on 42 in. wide cable trays with rungs spaced on 12 in. centers with tray supported as simple spans with deflection measured at the midpoint. Continuous spans may reduce deflection by as much as 50%.

**Deflection factor:** For lighter loads, deflection at any length can be calculated by multiplying the load by the deflection factor.

For Fittings consult pages A50 to A91.

| Series | | Support Span (Feet) | | | | | | | |
|---|---|---|---|---|---|---|---|---|---|
| | | 6 | 8 | 10 | 12 | 14 | 16 | 18 | 20 |
| SP1-6 | Load (lb.)/ft. | 556 | 313 | 200 | 139 | 102 | 78 | 62 | 50 |
| SH1-6 | Deflection (in.) | 0.122 | 0.216 | 0.338 | 0.486 | 0.662 | 0.865 | 1.095 | 1.351 |
| SS1-6 | Deflection Factor | 0.0002 | 0.0007 | 0.0017 | 0.0036 | 0.0065 | 0.0111 | 0.0177 | 0.0270 |
| | | | | | | | | | |
| SP3-6 | Load (lb.)/ft. | 833 | 469 | 300 | 208 | 153 | 117 | 93 | 75 |
| SH3-6 | Deflection (in.) | 0.151 | 0.268 | 0.419 | 0.603 | 0.821 | 1.072 | 1.357 | 1.675 |
| SS3-6 | Deflection Factor | 0.0002 | 0.0006 | 0.0014 | 0.0030 | 0.0055 | 0.0092 | 0.0146 | 0.0223 |
| | | | | | | | | | |
| SP4-6 | Load (lb.)/ft. | – | 728 | 466 | 324 | 238 | 182 | 144 | 117 |
| SH4-6 | Deflection (in.) | – | 0.312 | 0.487 | 0.702 | 0.955 | 1.247 | 1.579 | 1.949 |
| SS4-6 | Deflection Factor | – | 0.0004 | 0.0011 | 0.0022 | 0.0041 | 0.0069 | 0.0110 | 0.0167 |

# Straight Lengths

## 6 in. Straight Sections
## Series 1-6, 3-6, 4-6

**Ladder, ventilated and solid trough**






## Dimensions

| SP1-6, SH1-6, SS1-6, SP3-6, SH3-6, SS3-6, SP4-6, SH4-6, SS4-6 | |
|---|---|
| **W (in.)** | **Wi (in.)** |
| 6 | 3.34 |
| 9 | 6.34 |
| 12 | 9.34 |
| 18 | 15.34 |
| 24 | 21.34 |
| 30 | 27.34 |
| 36 | 33.34 |
| 42 | 39.34 |

## Technical Specifications

**LOAD RATINGS:** 1.5 Safety factor. All tray sections will support an additional 200 lb. concentrated load on any portion of tray (side rail, rung, etc.) above and beyond published load class.

| Series | Dimensions | Side Rail Design Factors • 1 Pair | Classifications | | | |
|---|---|---|---|---|---|---|
| | | | NEMA | CSA | UL | ABS |
| **SP1-6**<br>**SH1-6**<br>**SS1-6** | 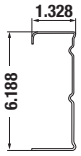 | Ix = 4.44 in.$^4$<br>Sx = 1.39 in.$^3$<br>Area = 0.874 in.$^2$ | **20A** | **D/6M** | UL cross sectional Area : 0.70 in.$^2$ | Stainless steel only |
| **SP3-6**<br>**SH3-6**<br>**SS3-6** | 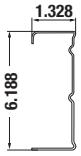 | Ix = 5.373 in.$^4$<br>Sx = 1.70 in.$^3$<br>Area = 1.229 in.$^2$ | **20A** | **E/6M** | UL cross sectional Area : 1.00 in.$^2$ | Stainless steel only |
| **SP4-6**<br>**SH4-6**<br>**SS4-6** | 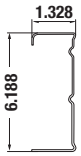 | Ix = 7.173 in.$^4$<br>Sx = 2.250 in.$^3$<br>Area = 1.471 in.$^2$ | **20C** | **Exceeds E/6M** | UL cross sectional Area : 1.00 in.$^2$ | Stainless steel only |

# Fittings

## 45° / 30° Horizontal Bends

### Part Numbering System

**SHF 4 24 L HB45 12**

- SHF: Prefix (SPF, SHF, SSF)
- 4: Side rail height
- 24: Width
- L: Bottom style
- HB45: Fitting type
- 12: Angle
- Nominal radius

### Selection Guide

Prefix: SPF (Pregalv.) ,SHF (Hot-Dip) ,SSF (Stainless Steel)
Inside Tray Widths: 6, 9, 12, 18, 24, 30, 36, 42
Angle: 45º, 30º
Nominal Radius: 12, 24, 36, 48
Bottom Styles: L– Ladder, V– Ventilated, S– Solid
Side Rail Heights: 3 in., 4 in., 5 in., 6 in., 7 in.

P/N - SHF624LHB9024

### 45º Horizontal BEND



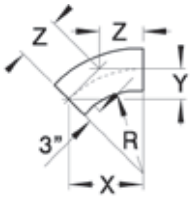


| Nominal | | Cat. No. | Dimensions | | |
|---|---|---|---|---|---|
| Radius | Width | | X | Y | Z |
| 12 | 6 | Prefix(†)-06-(*)-HB45-12 | 13-5/8 | 5-5/8 | 8 |
| | 9 | Prefix(†)-09-(*)-HB45-12 | 14-11/16 | 6-1/16 | 8-9/16 |
| | 12 | Prefix(†)-12-(*)-HB45-12 | 15-3/4 | 6-1/2 | 9-3/16 |
| | 18 | Prefix(†)-18-(*)-HB45-12 | 17-7/8 | 7-3/8 | 10-7/16 |
| | 24 | Prefix(†)-24-(*)-HB45-12 | 20 | 8-1/4 | 11-11/16 |
| | 30 | Prefix(†)-30-(*)-HB45-12 | 22-1/16 | 9-1/8 | 12-15/16 |
| | 36 | Prefix(†)-36-(*)-HB45-12 | 24-3/16 | 10 | 14-3/16 |
| | 42 | Prefix(†)-42-(*)-HB45-12 | 26-5/16 | 10-15/16 | 15-7/16 |
| 24 | 6 | Prefix(†)-06-(*)-HB45-24 | 22-1/16 | 9-1/8 | 12-15/16 |
| | 9 | Prefix(†)-09-(*)-HB45-24 | 23-1/8 | 9-9/16 | 13-9/16 |
| | 12 | Prefix(†)-12-(*)-HB45-24 | 24-3/16 | 10 | 14-3/16 |
| | 18 | Prefix(†)-18-(*)-HB45-24 | 26-5/16 | 10-15/16 | 15-7/16 |
| | 24 | Prefix(†)-24-(*)-HB45-24 | 28-7/16 | 11-13/16 | 16-11/16 |
| | 30 | Prefix(†)-30-(*)-HB45-24 | 30-9/16 | 12-11/16 | 17-15/16 |
| | 36 | Prefix(†)-36-(*)-HB45-24 | 32-11/16 | 13-9/16 | 19-1/8 |
| | 42 | Prefix(†)-42-(*)-HB45-24 | 34-13/16 | 14-7/8 | 20-3/8 |
| 36 | 6 | Prefix(†)-06-(*)-HB45-36 | 30-9/16 | 12-11/16 | 17-15/16 |
| | 9 | Prefix(†)-09-(*)-HB45-36 | 31-5/8 | 13-1/8 | 18-9/16 |
| | 12 | Prefix(†)-12-(*)-HB45-36 | 32-11/16 | 13-9/16 | 19-1/8 |
| | 18 | Prefix(†)-18-(*)-HB45-36 | 34-13/16 | 14-7/16 | 20-3/8 |
| | 24 | Prefix(†)-24-(*)-HB45-36 | 36-15/16 | 15-5/16 | 21-5/8 |
| | 30 | Prefix(†)-30-(*)-HB45-36 | 39-1/16 | 16-3/16 | 22-7/8 |
| | 36 | Prefix(†)-36-(*)-HB45-36 | 41-3/16 | 17-1/16 | 24-1/8 |
| | 42 | Prefix(†)-42-(*)-HB45-36 | 43-5/16 | 17-15/16 | 25-3/8 |
| 48 | 6 | Prefix(†)-06-(*)-HB45-48 | 39-1/16 | 16-3/16 | 22-7/8 |
| | 9 | Prefix(†)-09-(*)-HB45-48 | 40-1/8 | 16-3/8 | 23-1/2 |
| | 12 | Prefix(†)-12-(*)-HB45-48 | 41-3/16 | 17-1/16 | 24-1/8 |
| | 18 | Prefix(†)-18-(*)-HB45-48 | 43-5/16 | 17-15/16 | 25-3/8 |
| | 24 | Prefix(†)-24-(*)-HB45-48 | 45-7/16 | 18-13/16 | 26-5/8 |
| | 30 | Prefix(†)-30-(*)-HB45-48 | 47-9/16 | 19-11/16 | 27-7/8 |
| | 36 | Prefix(†)-36-(*)-HB45-48 | 49-11/16 | 20-9/16 | 29-1/8 |
| | 42 | Prefix(†)-42-(*)-HB45-48 | 51-13/16 | 21-7/16 | 30-5/16 |

### 30º Horizontal BEND



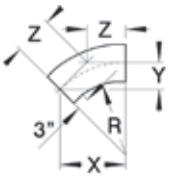


| Nominal | | Cat. No. | Dimensions | | |
|---|---|---|---|---|---|
| Radius | Width | | X | Y | Z |
| 12 | 6 | Prefix(†)-06-(*)-HB30-12 | 11-5/8 | 3-1/8 | 6-3/16 |
| | 9 | Prefix(†)-09-(*)-HB30-12 | 12-3/8 | 3-5/16 | 6-5/8 |
| | 12 | Prefix(†)-12-(*)-HB30-12 | 13-1/2 | 3-1/2 | 7 |
| | 18 | Prefix(†)-18-(*)-HB30-12 | 14-5/8 | 3-15/16 | 7-13/16 |
| | 24 | Prefix(†)-24-(*)-HB30-12 | 16-1/8 | 4-5/16 | 8-5/8 |
| | 30 | Prefix(†)-30-(*)-HB30-12 | 17-5/8 | 4-11/16 | 9-7/16 |
| | 36 | Prefix(†)-36-(*)-HB30-12 | 19-1/8 | 5-1/8 | 10-1/4 |
| | 42 | Prefix(†)-42-(*)-HB30-12 | 20-5/8 | 5-1/2 | 11-1/16 |
| 24 | 6 | Prefix(†)-06-(*)-HB30-24 | 17-5/8 | 4-11/16 | 9-7/16 |
| | 9 | Prefix(†)-09-(*)-HB30-24 | 18-3/8 | 4-15/16 | 9-13/16 |
| | 12 | Prefix(†)-12-(*)-HB30-24 | 19-1/8 | 5-2/16 | 10-4/16 |
| | 18 | Prefix(†)-18-(*)-HB30-24 | 20-5/8 | 5-8/16 | 11-1/16 |
| | 24 | Prefix(†)-24-(*)-HB30-24 | 22-1/8 | 5-15/16 | 11-13/16 |
| | 30 | Prefix(†)-30-(*)-HB30-24 | 23-5/8 | 6-5/16 | 12-10/16 |
| | 36 | Prefix(†)-36-(*)-HB30-24 | 25-1/8 | 6-12/16 | 13-7/16 |
| | 42 | Prefix(†)-42-(*)-HB30-24 | 26-5/8 | 7-1/8 | 14-1/4 |
| 36 | 6 | Prefix(†)-06-(*)-HB30-36 | 23-5/8 | 6-5/16 | 12-5/8 |
| | 9 | Prefix(†)-09-(*)-HB30-36 | 24-3/8 | 6-1/2 | 13-1/16 |
| | 12 | Prefix(†)-12-(*)-HB30-36 | 25-1/8 | 6-3/4 | 13-7/16 |
| | 18 | Prefix(†)-18-(*)-HB30-36 | 26-5/8 | 7-1/4 | 14-1/4 |
| | 24 | Prefix(†)-24-(*)-HB30-36 | 28-1/8 | 7-1/2 | 15-1/16 |
| | 30 | Prefix(†)-30-(*)-HB30-36 | 29-5/8 | 7-15/16 | 15-7/8 |
| | 36 | Prefix(†)-36-(*)-HB30-36 | 31-1/8 | 8-5/16 | 16-11/16 |
| | 42 | Prefix(†)-42-(*)-HB30-36 | 32-5/8 | 8-3/4 | 17-1/2 |
| 48 | 6 | Prefix(†)-06-(*)-HB30-48 | 29-5/8 | 7-15/16 | 15-7/8 |
| | 9 | Prefix(†)-09-(*)-HB30-48 | 30-3/8 | 8-1/8 | 16-1/4 |
| | 12 | Prefix(†)-12-(*)-HB30-48 | 31-1/8 | 8-5/16 | 16-11/16 |
| | 18 | Prefix(†)-18-(*)-HB30-48 | 32-5/8 | 8-3/4 | 17-1/2 |
| | 24 | Prefix(†)-24-(*)-HB30-48 | 34-1/8 | 9-1/8 | 18-1/4 |
| | 30 | Prefix(†)-30-(*)-HB30-48 | 35-5/8 | 9-9/16 | 19-1/16 |
| | 36 | Prefix(†)-36-(*)-HB30-48 | 37-1/8 | 9-15/16 | 19-7/8 |
| | 42 | Prefix(†)-42-(*)-HB30-48 | 38-5/8 | 10-5/16 | 20-11/16 |

(†) Insert side rail height. (*) Insert bottom style to complete CAT. NO. Includes 1 pair of splice plates with hardware.

# Fittings

## Horizontal Tees, Crosses

### Part Numbering System

**SHF 4 24 L HT 12**

- SHF — Prefix: SPF, SHF, SSF
- 4 — Side rail height
- 24 — Width
- L — Bottom style
- HT — Fitting type
- 12 — Nominal radius

### Selection Guide

Prefix: SPF (Pregalv.), SHF (Hot-Dip) ,SSF (Stainless Steel)
Inside Tray Widths: 6, 9, 12, 18, 24, 30, 36, 42
Nominal Radius: 12, 24, 36, 48
Bottom Styles: L– Ladder, V– Ventilated, S– Solid
Side Rail Heights: 3 in., 4 in., 5 in., 6 in., 7 in.

P/N- SHF624LHT24

### Horizontal TEE

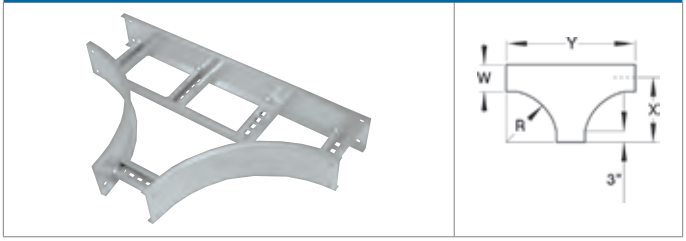


| Nominal | | Cat. No. | Dimensions | |
|---|---|---|---|---|
| Radius | Width | | X | Y |
| 12 | 6 | Prefix(†)-06-(*)-HT12 | 15 | 30 |
| | 9 | Prefix(†)-09-(*)-HT12 | 16-1/2 | 33 |
| | 12 | Prefix(†)-12-(*)-HT12 | 18 | 36 |
| | 18 | Prefix(†)-18-(*)-HT12 | 21 | 42 |
| | 24 | Prefix(†)-24-(*)-HT12 | 24 | 48 |
| | 30 | Prefix(†)-30-(*)-HT12 | 27 | 54 |
| | 36 | Prefix(†)-36-(*)-HT12 | 30 | 60 |
| | 42 | Prefix(†)-42-(*)-HT12 | 33 | 66 |
| 24 | 6 | Prefix(†)-06-(*)-HT24 | 27 | 54 |
| | 9 | Prefix(†)-09-(*)-HT24 | 28-1/2 | 57 |
| | 12 | Prefix(†)-12-(*)-HT24 | 30 | 60 |
| | 18 | Prefix(†)-18-(*)-HT24 | 33 | 66 |
| | 24 | Prefix(†)-24-(*)-HT24 | 36 | 72 |
| | 30 | Prefix(†)-30-(*)-HT24 | 39 | 78 |
| | 36 | Prefix(†)-36-(*)-HT24 | 42 | 84 |
| | 42 | Prefix(†)-42-(*)-HT24 | 45 | 90 |
| 36 | 6 | Prefix(†)-06-(*)-HT36 | 39 | 78 |
| | 9 | Prefix(†)-09-(*)-HT36 | 40-1/2 | 81 |
| | 12 | Prefix(†)-12-(*)-HT36 | 42 | 84 |
| | 18 | Prefix(†)-18-(*)-HT36 | 45 | 90 |
| | 24 | Prefix(†)-24-(*)-HT36 | 48 | 96 |
| | 30 | Prefix(†)-30-(*)-HT36 | 51 | 102 |
| | 36 | Prefix(†)-36-(*)-HT36 | 54 | 108 |
| | 42 | Prefix(†)-42-(*)-HT36 | 57 | 114 |
| 48 | 6 | Prefix(†)-06-(*)-HT48 | 51 | 102 |
| | 9 | Prefix(†)-09-(*)-HT48 | 52-1/2 | 105 |
| | 12 | Prefix(†)-12-(*)-HT48 | 54 | 108 |
| | 18 | Prefix(†)-18-(*)-HT48 | 57 | 114 |
| | 24 | Prefix(†)-24-(*)-HT48 | 60 | 120 |
| | 30 | Prefix(†)-30-(*)-HT48 | 63 | 126 |
| | 36 | Prefix(†)-36-(*)-HT48 | 66 | 132 |
| | 42 | Prefix(†)-42-(*)-HT48 | 69 | 138 |

### Horizontal CROSS

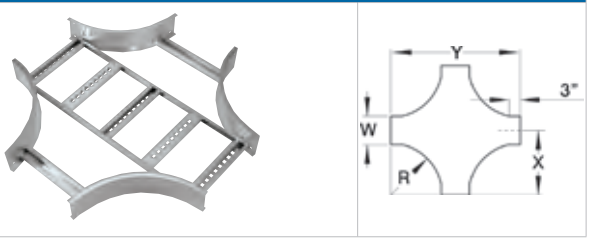


| Nominal | | Cat. No. | Dimensions | |
|---|---|---|---|---|
| Radius | Width | | X | Y |
| 12 | 6 | Prefix(†)-06-(*)-HX12 | 15 | 30 |
| | 9 | Prefix(†)-09-(*)-HX12 | 16-1/2 | 33 |
| | 12 | Prefix(†)-12-(*)-HX12 | 18 | 36 |
| | 18 | Prefix(†)-18-(*)-HX12 | 21 | 42 |
| | 24 | Prefix(†)-24-(*)-HX12 | 24 | 48 |
| | 30 | Prefix(†)-30-(*)-HX12 | 27 | 54 |
| | 36 | Prefix(†)-36-(*)-HX12 | 30 | 60 |
| | 42 | Prefix(†)-42-(*)-HX12 | 33 | 66 |
| 24 | 6 | Prefix(†)-06-(*)-HX24 | 27 | 54 |
| | 9 | Prefix(†)-09-(*)-HX24 | 28-1/2 | 57 |
| | 12 | Prefix(†)-12-(*)-HX24 | 30 | 60 |
| | 18 | Prefix(†)-18-(*)-HX24 | 33 | 66 |
| | 24 | Prefix(†)-24-(*)-HX24 | 36 | 72 |
| | 30 | Prefix(†)-30-(*)-HX24 | 39 | 78 |
| | 36 | Prefix(†)-36-(*)-HX24 | 42 | 84 |
| | 42 | Prefix(†)-42-(*)-HX24 | 45 | 90 |
| 36 | 6 | Prefix(†)-06-(*)-HX36 | 39 | 78 |
| | 9 | Prefix(†)-09-(*)-HX36 | 40-1/2 | 81 |
| | 12 | Prefix(†)-12-(*)-HX36 | 42 | 84 |
| | 18 | Prefix(†)-18-(*)-HX36 | 45 | 90 |
| | 24 | Prefix(†)-24-(*)-HX36 | 48 | 96 |
| | 30¥ | Prefix(†)-30-(*)-HX36 | 51 | 102 |
| | 36¥ | Prefix(†)-36-(*)-HX36 | 54 | 108 |
| | 42¥ | Prefix(†)-42-(*)-HX36 | 57 | 114 |
| 48¥ | 6 | Prefix(†)-06-(*)-HX48 | 51 | 102 |
| | 9 | Prefix(†)-09-(*)-HX48 | 52-1/2 | 105 |
| | 12 | Prefix(†)-12-(*)-HX48 | 54 | 108 |
| | 18 | Prefix(†)-18-(*)-HX48 | 57 | 114 |
| | 24 | Prefix(†)-24-(*)-HX48 | 60 | 120 |
| | 30 | Prefix(†)-30-(*)-HX48 | 63 | 126 |
| | 36 | Prefix(†)-36-(*)-HX48 | 66 | 132 |
| | 42 | Prefix(†)-42-(*)-HX48 | 69 | 138 |

(†) Insert side rail height. (*) Insert bottom style to complete CAT. NO. Tees include 2 pairs / Crosses include 3 pairs of splice plates with hardware.
¥ Shipped with SPW-3/8HXHWK hardware kit.

# Splice Plates

## Splice Plate



Packaged in pairs with zinc plated hardware. Kit contents
4 bolts, 4 nuts, 4 washers
3/8 in. diameter.

Provided as standard with each straight and/or fitting.

| Cat. No. | Material Prefix | Side Rail Height |
|---|---|---|
| (Prefix)-3-SSP<br>(Prefix)-4-SSP<br>(Prefix)-5-SSP<br>(Prefix)-6-SSP<br>(Prefix)-7-SSP | SPW<br>SHW<br>SSW | 4<br>5<br>6<br>7 |

P/N- SHW6SSP

## Expansion Splice Plate

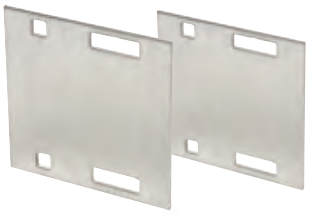

Allows for a 1 in. expansion or contraction of tray system.

Packaged in pairs with hardware. Kit contents
8 bolts, 8 stop nuts, 4 serrated flange nuts 3/8 in. diameter.

| Cat. No. | Material Prefix | Side Rail Height |
|---|---|---|
| (Prefix)-3-ESP<br>(Prefix)-4-ESP<br>(Prefix)-5-ESP<br>(Prefix)-6-ESP<br>(Prefix)-7-ESP | SPW<br>SHW<br>SSW | 3<br>4<br>5<br>6<br>7 |

## Transition Splice Plate



| Cat. No. | Material | Description | Side Rail Height |
|---|---|---|---|
| XNM-XP400-(*)-SS6 | Polyester/Fiberglass | Designed to make the transition. from aluminum to steel cable tray Works for all 6 in. side rails. | 6 |

Each pair of plate:
8 x carriage bolt (3/8 x 1 in.) SS316
8 x 3/8 in. serrated flange nut SS316

## Step Down Splice Plate



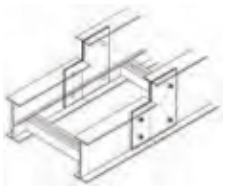

Connects side rails of different heights. Hardware included.
Kit contents 8 bolts, 8 nuts, 8 washers 3/8 in. diameter.

| Cat. No. | Material Prefix | Side Rail Width (in.) |
|---|---|---|
| (Prefix)-(*)-(**)-SDS | SPW<br>SHW<br>SSW | 4<br>5<br>6<br>7 |

(*) Insert side rail height 1.
(**) Insert side rail height 2.
Note: Side rail height 1 is greater than side rail height 2.

## Horizontal Adjustable Plate



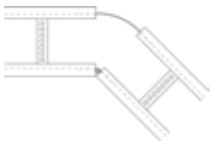

Furnished in pairs with hardware.

| Cat. No. | Material Prefix | Side Rail Height (in.) | Tray Width (in.) |
|---|---|---|---|
| (Prefix)-(*)06HBP<br>(Prefix)-(*)09HBP<br>(Prefix)-(*)12HBP<br>(Prefix)-(*)18HBP<br>(Prefix)-(*)24HBP<br>(Prefix)-(*)30HBP<br>(Prefix)-(*)36HBP<br>(Prefix)-(*)42HBP | SPW<br>SHW<br>SSW | 3<br>4<br>5<br>6<br>7 | 06<br>09<br>12<br>18<br>24<br>30<br>36<br>42 |

(*) Insert side rail height.

# Clamps and Hardware

## Self-drilling – tapping screw



| Cat. No. | Material | Description |
|---|---|---|
| SPW-10-SCR | Zinc plated steel | Self-drilling – tapping screw |
| SSW-10-SCR | Stainless steel | Self-drilling – tapping screw |

## Hold Down Clamp



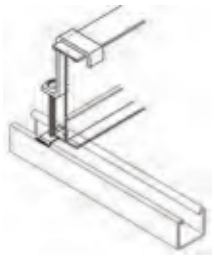

| Cat. No. | Material Prefix | Side Rail Height (in.) |
|---|---|---|
| (Prefix)-3-HDC | SPW<br>SHW<br>SSW | 3 |
| (Prefix)-4-HDC | | 4 |
| (Prefix)-5-HDC | | 5 |
| (Prefix)-6-HDC | | 6 |
| (Prefix)-7-HDC | | 7 |

Note: Hardware included. Kit contains 1 bolt and 1 channel nut.

PN- SPW6HDC

## Hold Down Clamp



| Cat. No. | Type | Material | Design Load |
|---|---|---|---|
| SPWHDCS | Single | Pregalvanized | 800 lb./pair |
| SHWHDCS | Single | Hot-dipped galvanized | |
| SSWHDCS | Single | Stainless steel 316 | |
| SPWHDCD | Double | Pregalvanized | 1500 lb./pair |
| SHWHDCD | Double | Hot-dipped galvanized | |
| SSWHDCD | Double | Stainless steel 316 | |

## Conduit Clamp



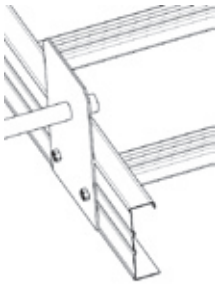

| Cat. No. | Type | Material |
|---|---|---|
| PU100CC | 1 | Pregalvanized |
| PU125CC | 1-1/4 | |
| PU150CC | 1-1/2 | |
| PU200CC | 2 | |
| PU250CC | 2-1/2 | |
| PU300CC | 3 | |
| PU400CC | 4 | |

Arctic Electrical Nunavut Ltd

PO Box 1381, Iqaluit, NU X0A 0H0 -P867-975-3494

# 26 12 17 Dry Type Transformers up to 600V Primary

**Date: June 11, 2019**

REVIEWED BY CONTRACTOR
Kudlik Construction Ltd.
NAME: Sandra Rousseau P.Eng
DATE: Jun 11, 2019

# Transmittal

**Arctic Electrical Nunavut Ltd**
PO Box 1381
Iqaluit, Nu.
X0A 0H0
Phone: 867-975-3494
**From: Lee Pitcher**

**Project** **Waste Waste Treatment Plant**
**Location** Iqaluit NU
**To** Kudlik Construction
Contact: Sandra Rousseau P.Eng.
srousseau@kudlik.biz



SE-16R2
PO-Guillevin-P19-078

Attached are the following items:

- [x] Drawings
- [ ] Prints
- [ ] Plans
- [x] Specifications
- [ ] Information
- [ ] Submittals

Other:

THESE ARE TRANSMITTED FOR:

- [ ] Prior Approval
- [ ] Approval
- [ ] Approval as Submitted
- [ ] Approval as Noted
- [x] Resubmittal for Approval
- [ ] Corrections
- [ ] Your Use
- [ ] Review and Comment
- [ ] Record

Bids due on:
Other:

| Qty | Type | MFG | Part |
|---|---|---|---|

26 12 17 Distribution Transformer

Provide a shop drawing for the 45kVA transformer

STANTEC PROJECT #: 110126045
SUBMITTAL # ELE-016-R2

This review by Stantec is for general conformance with the design concept of Stantec's design of the:

- [ ] Architectural
- [ ] Structural
- [ ] Mechanical
- [x] Electrical
- [ ] Other

component(s) only and does not mean that Stantec has verified or approves the shop drawing(s). The Contractor remains solely responsible for the shop drawing(s) and this review by Stantec does not relieve the Contractor of the Contractor's responsibility for errors or omissions in the shop drawing(s) or for meeting all requirements of the contract documents. This review does not mean that Stantec approves the detailed design inherent in the shop drawing, responsibility for which shall remain with the Contractor submitting same, nor does this review mean that Stantec accepts any deviation of the shop drawing(s) from the contract documents. The Contractor is responsible for confirming all dimensions and correlating them at the job site, for all construction means, methods and techniques, and for coordination of construction work of all trades, including coordination of all shop drawings.

Stantec

- [ ] REVIEWED
- [x] REVIEWED, AS NOTED
- [ ] REVISE AND RESUBMIT
- [ ] NOT REVIEWED

DATE 2019-06-12
BY Jamie McLeish

**Notes:**
Please review the attached approval drawings carefully. Production cannot be scheduled until a signed copy of the final approved drawing are received. Be aware that once drawings are approved, any errors due to incorrect information are the responsibility of the client.

Do not hesitate to contact me if you have any questions or concerns.

Hammond Power Solutions Inc.

# HPS Sentinel ® K

Energy Efficient Distribution Transformer

Transformateur de Distribution à Bon Rendement Énergétique

Hammond Power Solutions
Guelph, ONT
Compton, CA
Baraboo, WI
Monterrey, MX

Part No. SK3A0112PB4KB

® LR 3902

DRY TYPE TRANSFORMER
77U5
E112313
LISTED

ALSO VERIFIED IN ACCORDANCE TO ENERGY STANDARD C802.2–12

| | | | |
|---|---|---|---|
| Cust. Ref. / Ref. du Client | | Serial No. / No. de Serie | |
| Phase | 3 | HV/HT | 600V 108.3A |
| Type | K | BIL | 10 kV |
| Cooling / Refroidissement | ANN | Term / Bornes | H1 H2 H3 |
| kVA | 112.5 | LV/BT | 208Y/120V 312A |
| Temp. Rise / Echauffement | 80 °C | BIL | 10 kV |
| Temp Class / Classe Temp | 220 °C | Term / Bornes | X0 X1 X2 X3 |
| Winding / Enroulement | CU | Energy Regulations | DOE 10 CFR PART 431:2016 |
| Frequency / Frequence Hz | 60 | Reglements de Energetique | CEE ACT SOR/2018–201 |
| Impedance % @ 100 °C | 3.4 | Suitable for non–sinusoidal current load with K–factor not to exceed / Convient à des courants non–sinusoïdaux avec facteur K n'excédant pas | 4 |
| Encl Type / Type De Coffrage | 3R | | |
| Wt LBS / Poids en lbs | 950 | | |

| VOLTS | CURRENT / COURANT | % RATED VOLTAGE / % TENSION NOMINALE | CONNECTION EACH PHASE / CONNEXION PAR PHASE |
|---|---|---|---|
| 630 | 103.1 | 105 | 1 |
| 615 | 105.6 | 102.5 | 2 |
| 600 | 108.3 | 100 | 3 |
| 585 | 111 | 97.5 | 4 |
| 570 | 114 | 95 | 5 |
| 555 | 117 | 92.5 | 6 |
| 540 | 120 | 90 | 7 |

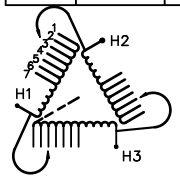


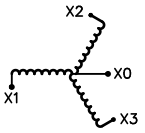


SPACINGS BETWEEN ANY VENTILATED ENCLOSURE PANEL AND ANY ADJACENT WALL SHALL BE A MINIMUM OF 5 INCHES EXCEPT WHEN WALL MOUNTED USING APPROVED WALL MOUNTING KIT
ELECTROSTATIC SHIELD

SEISMIC QUALIFICATIONS, OSP–0136–10
AS FLOOR MOUNT ONLY
IBC 2012/ASCE 7–10
SDS<=2.0g Z/h=1 Ip=1.5

d0001887hb

TITLE: 3PH DISTRIBUTION TRANSFORMER
NAMEPLATE INFORMATION

| NO. | DATE | BY | REVISION |
|---|---|---|---|
| | | | |

SCALE: NTS
DATE: 19/05/24
DES.: PPICASSI

SHEET 1 OF 3

EDB SK3A0112PB4KB

0.0 ppicassinos 2019/05/24 09:34

FRONT VIEW

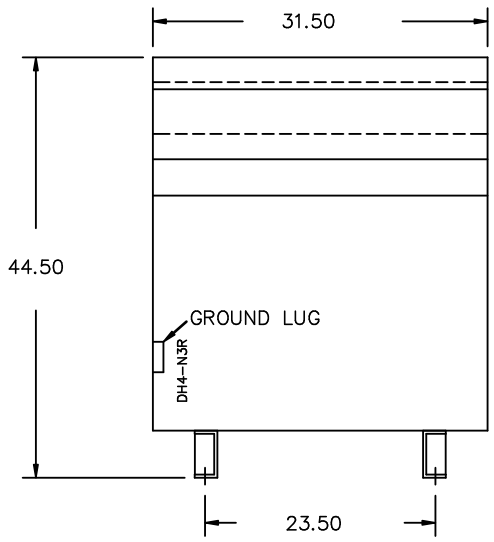


SIDE VIEW

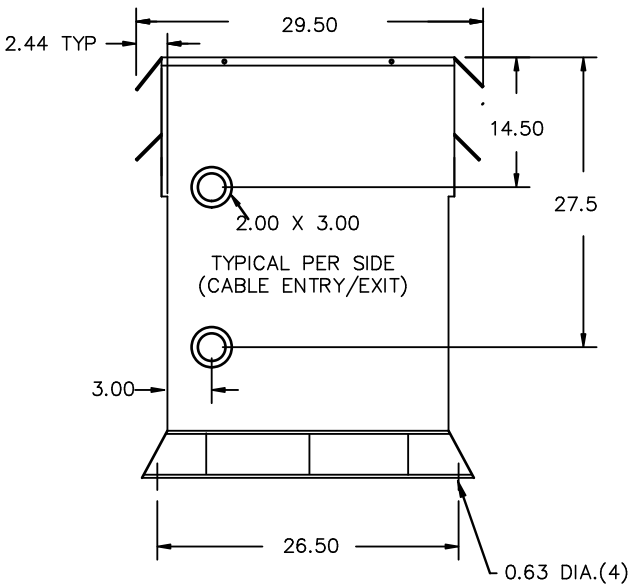


All Dimensions in inches

ENCLOSURE COLOR :ANSI 61 GREY – OUTDOOR

HV TERMINAL DETAIL

MECHANICAL TYPE LUGS INCLUDED
SUITABLE FOR 250MCM–6 CU/AL
CONDUCTORS
1 CONDUCTOR PER PHASE

LV TERMINAL DETAIL

MECHANICAL TYPE LUGS INCLUDED
SUITABLE FOR 350MCM–6 CU/AL
CONDUCTORS
2 CONDUCTORS PER PHASE

CUSTOMER NOTES:

– HV TERMINATED AT TOP FRONT
– LV TERMINATED AT BOTTOM FRONT
200% RATED NEUTRAL X0 HAS QTY 2 LUGS

Hammond Power Solutions Inc.

TITLE: 3PH DISTRIBUTION TRANSFORMER

| NO. | DATE | BY | REVISION |
|---|---|---|---|
| | | | |
| | | | |

DES: PPICASSI
DATE: 19/05/24
SCALE: NTS

SHEET 2 OF 3

EDB SK3A0112PB4KB

0.0 ppicassinos 2019/05/24 09:34

ENCLOSURE BOTTOM VIEW

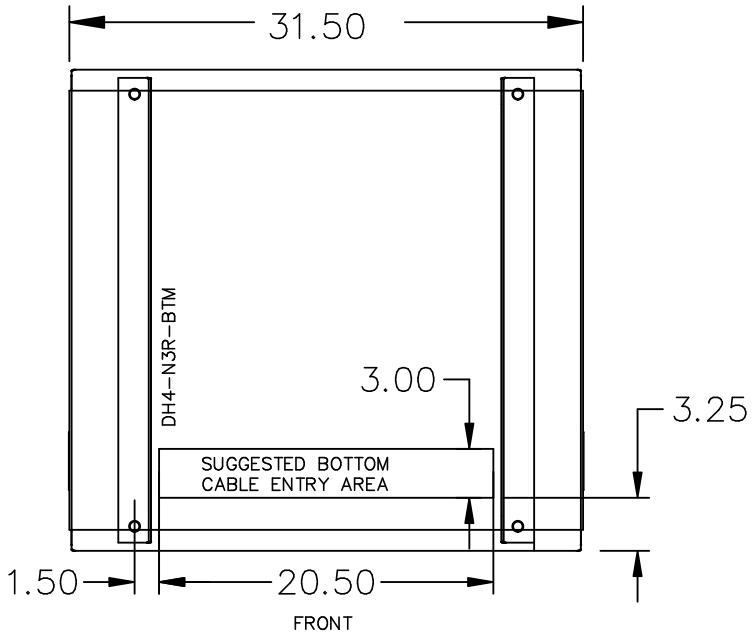


NOTE:
WHEN BOTTOM CABLE ENTRY IS OPTED, THE SPACE USED FOR CONDUITS IN THE FRONT OF THE TRANSFORMER SHOULD NOT OBSTRUCT MORE THAN 50% OF THE FRONT AIR INTAKE AREA DEFINED BETWEEN THE BOTTOM PLATE AND THE SUPPORTING LEGS.
SEE MANUAL FOR ADDITIONAL INFORMATION

Hammond Power Solutions Inc.

TITLE: 3PH DISTRIBUTION TRANSFORMER
ENCLOSURE BOTTOM VIEW

| NO. | DATE | BY | REVISION |
|---|---|---|---|
| | | | |
| | | | |

DES: PPICASSI
DATE: 19/05/24
SCALE: NTS

SHEET 3 OF 3

EDB SK3A0112PB4KB

0.0 ppicassinos 2019/05/24 09:34

# ACCESSORIES (for transformers listed in sections 3, 4, 7, 10 and 11)

## ANTI-VIBRATION PAD AND VIBRATION ISOLATOR KITS

All standard transformers come with installed internal vibration absorbing pads to minimize noise during operation. Optional external "anti-vibration" pad and "vibration isolator" (for higher noise dampening) kits can be used to reduce operating noise even further. All are resistant to industrial contaminants like oils, acids and alkalies.

### ANTI-VIBRATION PAD KITS

| Part No. | Case Style | Description |
|---|---|---|
| **P1** | NH Series | Set of four (4) rubber anti-vibration pads which replace the standard steel enclosure washers. |
| **P2** | NJ Series | |



**All Anti-Vibration Pad kits and Vibration Isolator kits contain a set of four (4) pads or isolators. Therefore only one kit is required per transformer.**

### VIBRATION ISOLATOR KITS

| Part No. | Transformer Weight (Lb) | Description |
|---|---|---|
| **NMP1** | Up to 340 lbs | Set of four (4) molded neoprene and steel plate assemblies that virtually eliminate vibration noise between the transformer and the mounting surface. |
| **NMP2** | 341 to 680 lbs | |
| **NMP3** | 681 to 1040 lbs | |
| **NMP4** | 1041 to 1740 lbs | |
| **NMP5** | 1741 to 2330 lbs | |
| **NMP6** | 2331 to 3450 lbs | |
| **NMP7** | 3451 to 4690 lbs | |

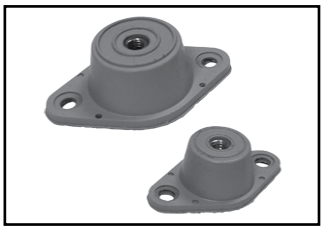

# ACCESSORIES (for transformers listed in sections 8 and 10)

## NQTW1 and NQTW2 Wall Mounting Kits

The **NQTW1 and NQTW2** wall mounting kits are specifically designed for HPS commercial or industrial encapsulated (potted) distribution transformer units up to a maximum of 45kVA or 800 pounds (363 kg). These mounting kits are designed for encapsulated (potted) units only, no drip plate is included/required. Please contact HPS customer service if you have any questions.

**Note:** Always measure and secure mounting brackets to the wall surface first, then lift the transformer (using appropriate lifting equipment) onto the brackets and attach using minimum Grade 8 hardware.

| Enclosure Case Style | Mounting Type | Wall Mounting Kit Part Number |
|---|---|---|
| NQ0-NQ8 | Wall | **Included** |
| NQS10 | Wall or Floor | **NQTW2** |
| NQT3-NQT6 | Wall | **Included** |
| NQT7-NQT8 | Wall or Floor | **NQTW1** |
| NQT9A | Floor | **N/A** |
| NQT9* | Wall or Floor | **NQTW2** |

*Applies to HPS Fortress line only.

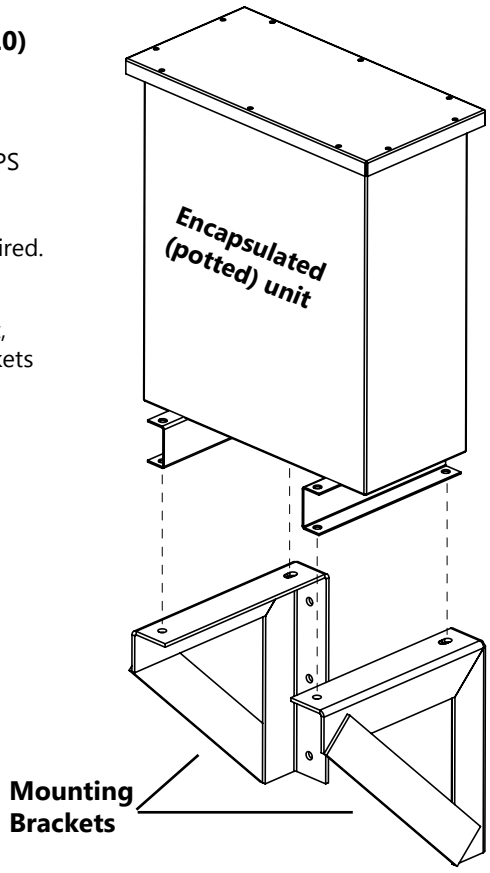





© Hammond Power Solutions Inc.
Data subject to change without notice.

Hammond Power Solutions Inc.

# HPS Sentinel ® G

Energy Efficient Distribution Transformer
Transformateur de Distribution à Bon Rendement Énergétique

Hammond Power Solutions
Guelph, ONT / Compton, CA
Baraboo, WI / Monterrey, MX

Part No. SG3A0045PK0CB

LR 3902
DRY TYPE TRANSFORMER 77US E112313
LISTED
ALSO VERIFIED IN ACCORDANCE TO ENERGY STANDARD C802.2-12

| | | | |
|---|---|---|---|
| Cust. Ref. / Ref. du Client | | Serial No. / No. de Serie | |
| Phase | 3 | HV/HT | 600V |
| Type | K | BIL | 10 |
| Cooling / Refroidissement | ANN | Term / Bornes | H1 H2 H3 |
| kVA | 45 | LV/BT | 480Y/277V |
| Temp. Rise / Echauffement | 80 °C | BIL | 10 |
| Temp Class / Classe Temp | 220 °C | Term / Bornes | X0 X1 X2 X3 |
| Winding / Enroulement | CU | Energy Regulations | DOE 10 CFR PART 431:2016 |
| Frequency / Frequence Hz | 60 | Reglements de Energetique | CEE ACT SOR/2016-311 AMENDMENT 14 |
| Impedance % @ 100 °C | 1.8 | | |
| Encl Type / Type De Coffrage | 3R | | |
| Wt LBS / Poids en lbs | 650 | | |

| VOLTS | CURRENT COURANT | % RATED VOLTAGE % TENSION NOMINALE | CONNECTION EACH PHASE CONNEXION PAR PHASE |
|---|---|---|---|
| 630 | 41.2 | 105 | 1 |
| 615 | 42.2 | 102.5 | 2 |
| 600 | 43.3 | 100 | 3 |
| 585 | 44.4 | 97.5 | 4 |
| 570 | 45.6 | 95 | 5 |
| 555 | 46.8 | 92.5 | 6 |
| 540 | 48.1 | 90 | 7 |

SPACINGS BETWEEN ANY VENTILATED ENCLOSURE PANEL AND ANY ADJACENT WALL SHALL BE A MINIMUM OF 5 INCHES EXCEPT WHEN WALL MOUNTED USING APPROVED WALL MOUNTING KIT

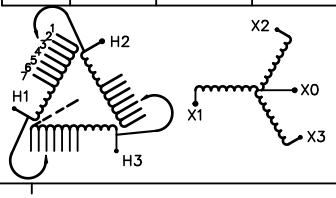


SEISMIC QUALIFICATIONS, OSP-0136-10
AS FLOOR MOUNT ONLY
IBC 2012/ASCE 7-10
SDS<=2.0g Z/h=1 Ip=1.5

d0001886b

| NO. | DATE | BY | REVISION |
|---|---|---|---|
| 1 | 17/04/03 | JW | ADDED ENCL BOTTOM DRAWING |

TITLE: 3PH DISTRIBUTION TRANSFORMER
NAMEPLATE INFORMATION

SCALE: NTS
DATE: 15/11/09
DES.: JWEN

SHEET 1 OF 3

EDB SG3A0045PK0CB

1.1 jwen 2017/11/09 10:03

FRONT VIEW

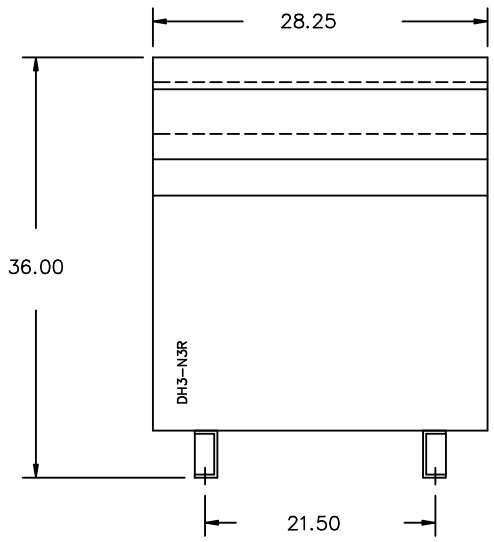


SIDE VIEW

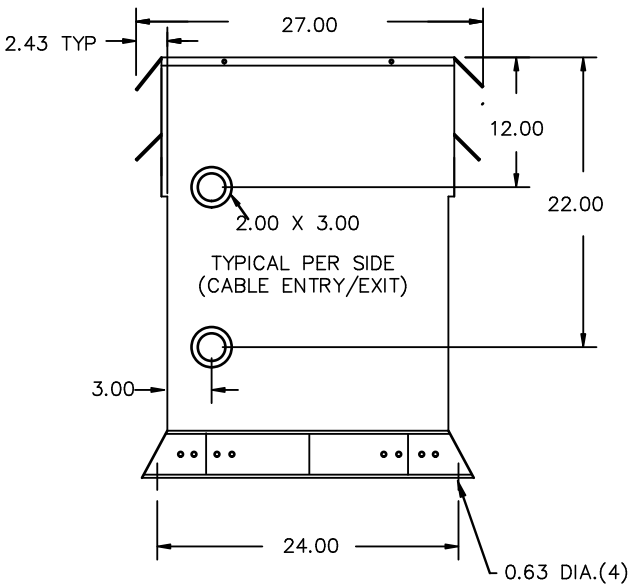


All Dimensions in inches

ENCLOSURE COLOR :ANSI 61 GREY – OUTDOOR

H.V.1. TERMINAL DETAIL

MECHANICAL TYPE LUGS INCLUDED
SUITABLE FOR #2/0–14 CU/AL
CONDUCTORS
1 CONDUCTOR PER PHASE

L.V.1. TERMINAL DETAIL

MECHANICAL TYPE LUGS INCLUDED
SUITABLE FOR #2/0–14 CU/AL
CONDUCTORS
1 CONDUCTOR PER PHASE

CUSTOMER NOTES:
- HV1 TERMINATED AT TOP FRONT
- LV1 TERMINATED AT BOTTOM FRONT

Hammond Power Solutions Inc.

TITLE: 3PH DISTRIBUTION TRANSFORMER

| NO. | DATE | BY | REVISION |
|---|---|---|---|
| 1 | 17/04/03 | JW | ADDED ENCL BOTTOM DRAWING |

DES: JWEN
DATE: 15/11/09
SCALE: NTS

SHEET 2 OF 3

EDB SC3A0045PKOCB

1.1 jwen 2017/11/09 10:03

ENCLOSURE BOTTOM VIEW

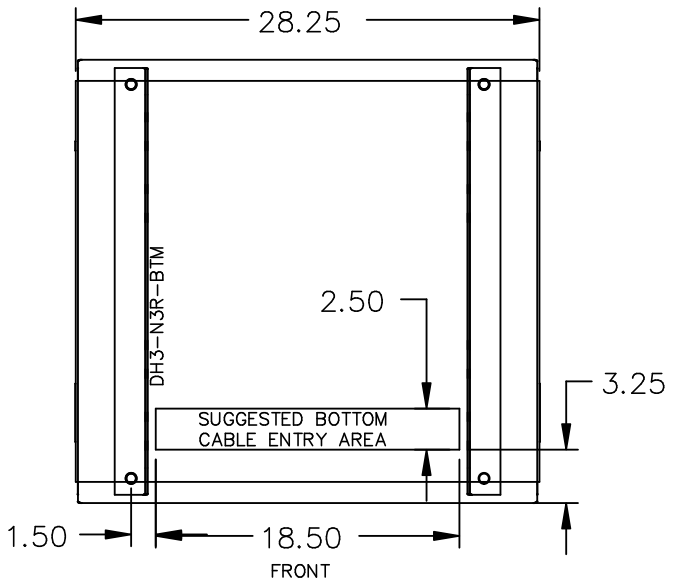


NOTE:
WHEN BOTTOM CABLE ENTRY IS OPTED, THE SPACE USED FOR CONDUITS IN THE FRONT OF THE TRANSFORMER SHOULD NOT OBSTRUCT MORE THAN 50% OF THE FRONT AIR INTAKE AREA DEFINED BETWEEN THE BOTTOM PLATE AND THE SUPPORTING LEGS.
SEE MANUAL FOR ADDITIONAL INFORMATION

Hammond Power Solutions Inc.

TITLE: 3PH DISTRIBUTION TRANSFORMER
ENCLOSURE BOTTOM VIEW

| NO. | DATE | BY | REVISION | |
|---|---|---|---|---|
| 1 | 17/04/03 | JW | ADDED ENCL BOTTOM DRAWING | DES: JWEN |
| | | | | DATE: 15/11/09 |
| | | | | SCALE: NTS |

SHEET 3 OF 3

EDB SC3A0045PK0CB

1.1 jwen 2017/11/09 10:03

Arctic Electrical Nunavut Ltd
PO Box 1381, Iqaluit, NU X0A 0H0 -P867-975-3494

# 26 24 17 Panelboard Breaker Type

**Date: Dec 06, 2018**

REVIEWED BY CONTRACTOR
Kudlik Construction Ltd.
NAME: Sandra Rousseau P.Eng
DATE: Déc 06, 2018

# Transmittal

**Arctic Electrical Nunavut Ltd**
PO Box 1381
Iqaluit, Nu.
X0A 0H0
Phone: 867-975-3494
**From: Lee Pitcher**

**Project** **Waste Wate Treatment Plant**
**Location** Iqaluit NU
**To** Kudlik Construction
Contact: Sandra Rousseau P.Eng.
srousseau@kudlik.biz



SE-12R1 - SU-ELE-012R1
PO-Nedco

Attached are the following items:

- [x] Drawings
- [ ] Prints
- [ ] Plans
- [X] Specifications
- [ ] Information
- [ ] Submittals

Other:

THESE ARE TRANSMITTED FOR:

- [ ] Prior Approval
- [ ] Approval
- [ ] Approval as Submitted
- [ ] Approval as Noted
- [X] Resubmittal for Approval
- [ ] Corrections
- [ ] Your Use
- [ ] Review and Comment
- [ ] Record

Bids due on:
Other:

| Qty | Type | MFG | Part |
|---|---|---|---|

26 24 17 Panelboards-Panel 4A CCN-014

STANTEC PROJECT #: 110126045
SUBMITTAL # ELE-012R1

This review by Stantec is for general conformance with the design concept of Stantec's design of the:

- [ ] Architectural
- [ ] Structural
- [ ] Mechanical
- [x] Electrical
- [ ] Other

component(s) only and does not mean that Stantec has verified or approves the shop drawing(s). The Contractor remains solely responsible for the shop drawing(s) and this review by Stantec does not relieve the Contractor of the Contractor's responsibility for errors or omissions in the shop drawing(s) or for meeting all requirements of the contract documents. This review does not mean that Stantec approves the detailed design inherent in the shop drawing, responsibility for which shall remain with the Contractor submitting same, nor does this review mean that Stantec accepts any deviation of the shop drawing(s) from the contract documents. The Contractor is responsible for confirming all dimensions and correlating them at the job site, for all construction means, methods and techniques, and for coordination of construction work of all trades, including coordination of all shop drawings.

Stantec

- [ ] REVIEWED
- [x] REVIEWED, AS NOTED
- [ ] REVISE AND RESUBMIT
- [ ] NOT REVIEWED

DATE 2018-12-06
BY Konrad Goluch

Bus to be copper. Min S.C Rating to be 14k A.I.C. Fully rated

New Drawing showing Copper is added

**Notes:**
Please review the attached approval drawings carefully. Production cannot be scheduled until a signed copy of the final approved drawing are received. Be aware that once drawings are approved, any errors due to incorrect information are the responsibility of the client.

Do not hesitate to contact me if you have any questions or concerns.

# Product data sheet
## Characteristics

# NF442L2C
## NF Pnlbrd Interior 250A, 3 PH, 4 Wire, 42 CCT, Mn Lug, Cu



## Main

| | |
|---|---|
| Load center type | Main lugs |
| Circuit breaker type | EDB/EDG/EDJ |
| Material | Copper |

## Complementary

| | |
|---|---|
| Number of spaces | 42 |
| Enclosure nominal height | 56 in<br>44 in |
| Enclosure nominal width | 20 in |
| Enclosure nominal depth | 5.75 inFor NEMA 1 enclosure<br>6.5 inFor NEMA 3R/5/12 enclosure |
| Line Rated Current | 250 A |
| Wiring configuration | 4-wire |
| Phase | 3 phases |
| System Voltage | 480Y/277 V AC |

## Environment

| | |
|---|---|
| Standards | CSA C22.2<br>UL 67 |

## Offer Sustainability

| | |
|---|---|
| Sustainable offer status | Green Premium product |
| RoHS (date code: YYWW) | Compliant - since 1419 - Schneider Electric declaration of conformity<br>Schneider Electric declaration of conformity |
| REACh | Reference not containing SVHC above the threshold<br>Reference not containing SVHC above the threshold |
| Product environmental profile | Available |

Disclaimer: This documentation is not intended as a substitute for and is not to be used for determining suitability or reliability of these products for specific user applications

| | |
|---|---|
| Product end of life instructions | Need no specific recycling operations |

| REV | DESCRIPTION | BY | DATE | – | ---- | -- | --/--/-- |
|---|---|---|---|---|---|---|---|
| – | ---- | -- | --/--/-- | – | ---- | -- | --/--/-- |

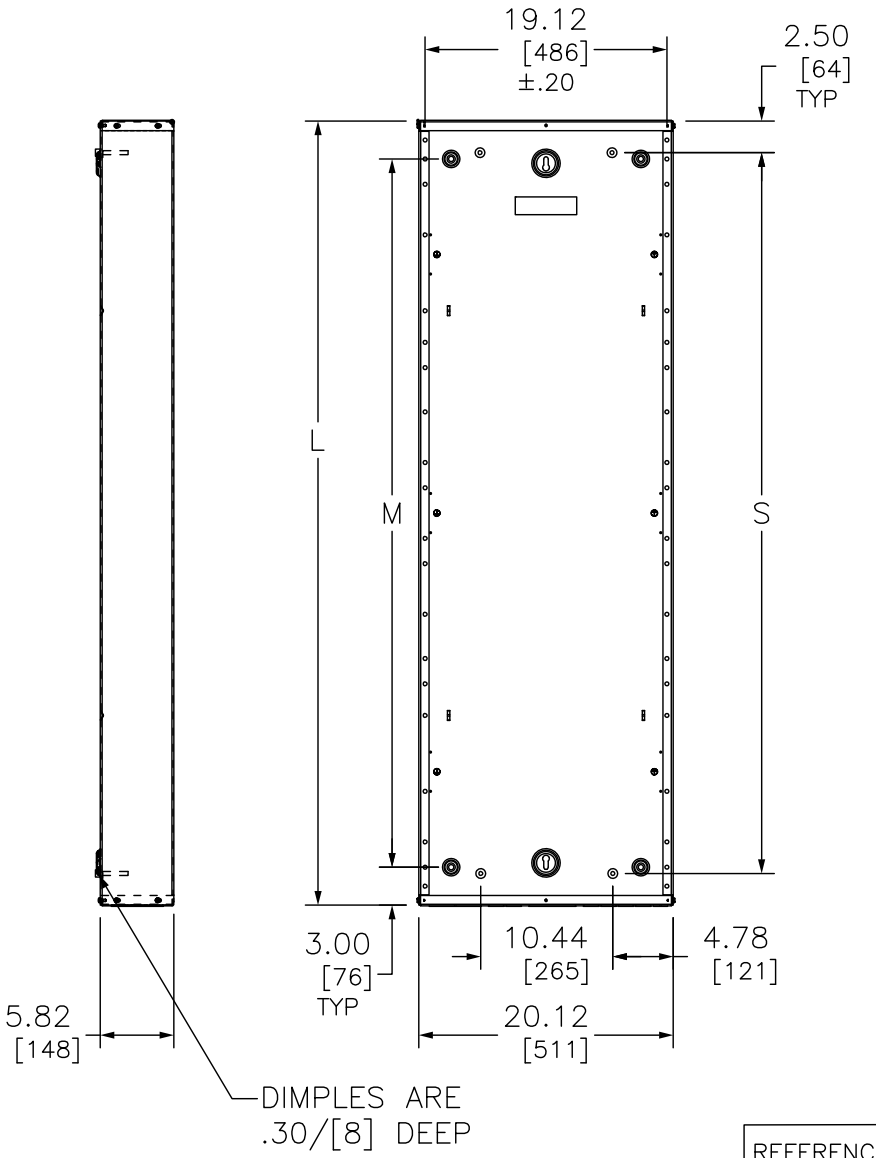


| KNOCKOUTS | | | | |
|---|---|---|---|---|
| SYMBOL | CONDUIT SIZE | | KNOCKOUT DIA | |
| | IN | MM | IN | MM |
| A | .50 | 13 | .88 | 22 |
| B | .75 | 19 | 1.12 | 28 |
| D | 1.25 | 32 | 1.75 | 44 |
| E | 1.50 | 38 | 2.00 | 51 |
| F | 2.00 | 51 | 2.50 | 64 |
| G | 2.50 | 64 | 3.00 | 76 |
| H | 3.00 | 76 | 3.62 | 92 |
| I | 3.50 | 89 | 4.12 | 105 |

*Enclosure*

DUAL DIMENSIONS: INCHES
MILLIMETERS

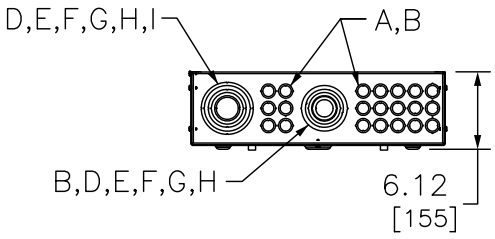


| REFERENCE CATALOG NO | L | | S | | M | |
|---|---|---|---|---|---|---|
| | IN | MM | IN | MM | IN | MM |
| MH26 | 26.00 | 660 | 21.00 | 533 | 20.00 | 508 |
| MH32 | 32.00 | 813 | 27.00 | 686 | 26.00 | 660 |
| MH38 | 38.00 | 965 | 33.00 | 838 | 32.00 | 813 |
| MH44 | 44.00 | 1118 | 39.00 | 991 | 38.00 | 965 |
| MH50 | 50.00 | 1270 | 45.00 | 1143 | 44.00 | 1118 |
| MH56 | 56.00 | 1422 | 51.00 | 1295 | 50.00 | 1270 |
| MH62 | 62.00 | 1575 | 57.00 | 1448 | 56.00 | 1422 |
| MH68 | 68.00 | 1727 | 63.00 | 1600 | 62.00 | 1575 |
| MH74 | 74.00 | 1880 | 69.00 | 1753 | 68.00 | 1727 |
| MH80 | 80.00 | 2032 | 75.00 | 1905 | 74.00 | 1880 |
| MH86 | 86.00 | 2184 | 81.00 | 2057 | 80.00 | 2032 |
| MH92 | 92.00 | 2337 | 87.00 | 2210 | 86.00 | 2184 |

| | | | |
|---|---|---|---|
| JOB NAME: | --- | EQUIPMENT DESIGNATION: | --- |
| JOB LOCATION: | --- | EQUIPMENT TYPE: | NEMA 1 BOXES |
| DRAWN BY: | --- | DRAWING TYPE: | --- |
| ENGR: | --- | | |
| DATE: | JULY 2018 | | |
| DRAWING STATUS: | --- | DWG# PBA600 | PG 1 OF 1 REV – |

*Surface Trim*

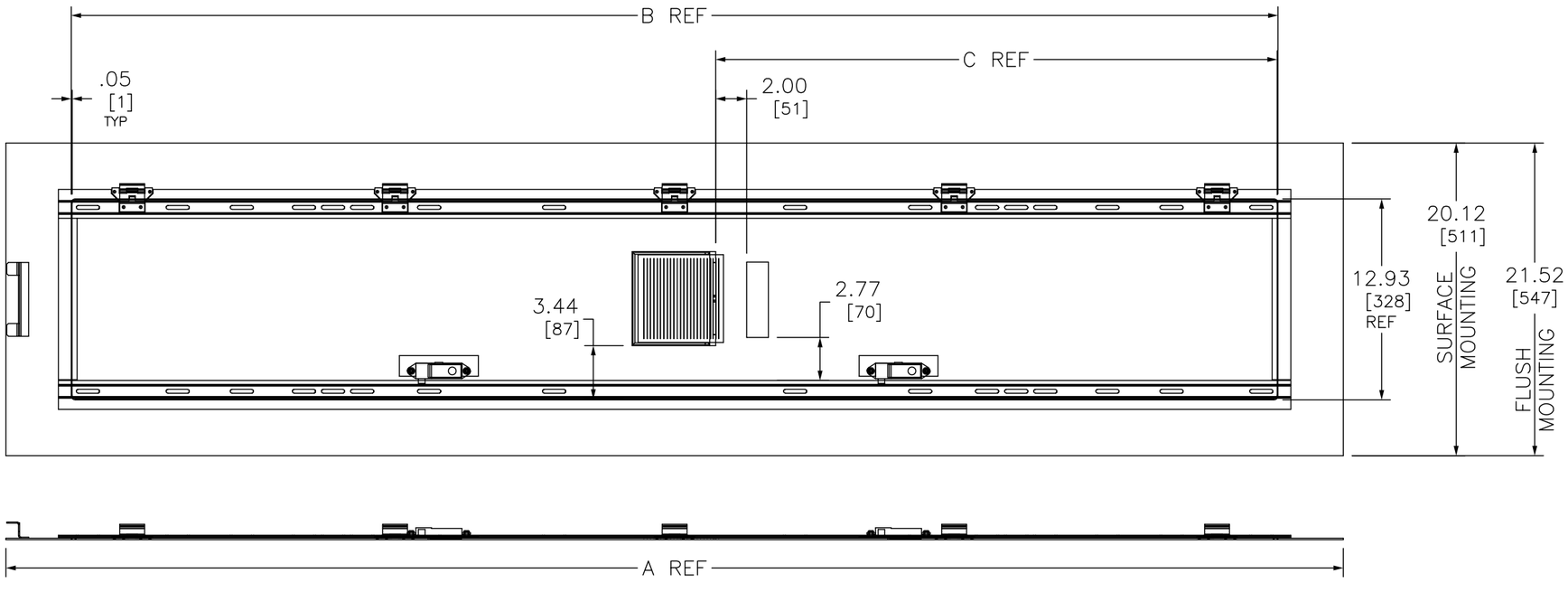


| CATALOG NUMBER | A | | B | | C | |
|---|---|---|---|---|---|---|
| | IN | MM | IN | MM | IN | MM |
| NC26S | 26.12 | 663 | 17.70 | 436 | 6.16 | 156 |
| NC32S | 32.12 | 816 | 23.70 | 602 | 9.16 | 233 |
| NC38S | 38.12 | 968 | 29.70 | 754 | 12.16 | 309 |
| NC44S | 44.12 | 1121 | 35.70 | 907 | 15.16 | 385 |
| NC50S | 50.12 | 1273 | 41.70 | 1059 | 18.16 | 461 |
| NC56S | 56.12 | 1425 | 47.70 | 1212 | 21.16 | 537 |
| NC62S | 62.12 | 1578 | 53.70 | 1364 | 24.16 | 614 |
| NC68S | 68.12 | 1730 | 59.70 | 1516 | 27.16 | 690 |
| NC74S | 74.12 | 1883 | 65.70 | 1669 | 30.16 | 766 |
| NC80S | 80.12 | 2035 | 71.70 | 1821 | 33.16 | 842 |
| NC26F | 27.52 | 699 | 17.70 | 436 | 6.16 | 156 |
| NC32F | 33.52 | 851 | 23.70 | 602 | 9.16 | 233 |
| NC38F | 39.52 | 1004 | 29.70 | 754 | 12.16 | 309 |
| NC44F | 45.52 | 1156 | 35.70 | 907 | 15.16 | 385 |
| NC50F | 51.52 | 1309 | 41.70 | 1059 | 18.16 | 461 |
| NC56F | 57.52 | 1461 | 47.70 | 1212 | 21.16 | 537 |
| NC62F | 63.52 | 1613 | 53.70 | 1364 | 24.16 | 614 |
| NC68F | 69.52 | 1766 | 59.70 | 1516 | 27.16 | 690 |
| NC74F | 75.52 | 1918 | 65.70 | 1669 | 30.16 | 766 |
| NC80F | 81.52 | 2071 | 71.70 | 1821 | 33.16 | 842 |
| NC86S | 86.12 | 2187 | 77.70 | 1974 | 36.16 | 918 |
| NC86F | 87.52 | 2071 | 77.70 | 1974 | 36.16 | 918 |
| NC35S | 35.12 | 892 | 26.70 | 678 | 10.66 | 271 |
| NC35F | 36.52 | 928 | 26.70 | 678 | 10.66 | 271 |
| NC41S | 41.12 | 1044 | 32.70 | 831 | 13.66 | 347 |
| NC41F | 42.52 | 1080 | 32.70 | 831 | 13.66 | 347 |
| NC92S | 92.12 | 2340 | 83.70 | 2126 | 39.16 | 995 |

DUAL DIMENSIONS: INCHES
MILLIMETERS

PANELBOARD COVER
TRIM TYPE 1
SURFACE/FLUSH

SQUARE D™
by Schneider Electric

DWG# NO. PWFDS-SYTI-0164

# Product data sheet
## Characteristics

# EDB14015
## E-Frame Brkr 15A, 1P, 277V, 18/25kA, Bolt-on Mnt



## Main

| | |
|---|---|
| Range of product | 125 A Frame EDB-EGB-EJB |
| Product or component type | Miniature circuit-breaker |
| Device short name | EDB |
| Module type | E-Frame |
| Trip unit rating | 875 A |

## Complementary

| | |
|---|---|
| Line Rated Current | 15 A |
| System Voltage | 277 V AC |
| AWG gauge | AWG 14...AWG 6 copper<br>AWG 12...AWG 6 aluminium |
| Breaking capacity | 18 kA 277 V AC<br>18 kA 240 V AC<br>25 kA 120 V AC<br>18 kA 120/240 V AC |
| Circuit breaker application | HACR rated<br>Switching Duty rated<br>HID rated |
| Depth | 4.05 in |
| Electrical connection | Lugs aluminium |
| Height | 5.66 in |
| Holding current | 270 A |
| Local signalling | Trip indicator |
| Mounting mode | Bolt-on |
| Number of poles | 1 |
| Number of spaces | 1 |
| Number of spaces required | 1 |
| Product destination | Panelboard NF |
| Product weight | 2 lb(US) |

Disclaimer: This documentation is not intended as a substitute for and is not to be used for determining suitability or reliability of these products for specific user applications

| | |
|---|---|
| Protection type | Short-circuit<br>Overload |
| Width | 0.98 in |
| Trip unit technology | Thermal-magnetic |
| Breaking capacity code | D |

## Environment

| | |
|---|---|
| Product certifications | CULus<br>IEC |
| Ambient air temperature for operation | 104 °F (40 °C) |

## Offer Sustainability

| | |
|---|---|
| Sustainable offer status | Green Premium product |
| RoHS (date code: YYWW) | Compliant - since 1423 - Schneider Electric declaration of conformity<br>Schneider Electric declaration of conformity |
| REACh | Reference not containing SVHC above the threshold<br>Reference not containing SVHC above the threshold |
| Product environmental profile | Available |
| Product end of life instructions | Need no specific recycling operations |

# Product data sheet
## Characteristics

# EDB34030
## E-Frame Brkr 30A, 3P, 480Y/277V, 18/25kA, Bolt-on Mnt



## Main

| | |
|---|---|
| Range of product | 125 A Frame EDB-EGB-EJB |
| Product or component type | Miniature circuit-breaker |
| Device short name | EDB |
| Module type | E-Frame |
| Trip unit rating | 875 A |

## Complementary

| | |
|---|---|
| Line Rated Current | 30 A |
| System Voltage | 480Y/277 V AC |
| AWG gauge | AWG 14...AWG 6 copper<br>AWG 12...AWG 6 aluminium |
| Breaking capacity | 18 kA 277 V AC<br>18 kA 480Y/277 V AC<br>25 kA 120 V AC<br>25 kA 120/240 V AC<br>25 kA 240 V AC |
| Circuit breaker application | HACR rated<br>HID rated |
| Depth | 4.05 in |
| Electrical connection | Lugs aluminium |
| Height | 5.66 in |
| Holding current | 270 A |
| Local signalling | Trip indicator |
| Mounting mode | Bolt-on |
| Number of poles | 3 |
| Number of spaces | 3 |
| Number of spaces required | 3 |
| Product destination | Panelboard NF |
| Product weight | 4 lb(US) |

Disclaimer: This documentation is not intended as a substitute for and is not to be used for determining suitability or reliability of these products for specific user applications

| | |
|---|---|
| Protection type | Short-circuit<br>Overload |
| Width | 2.94 in |
| Trip unit technology | Thermal-magnetic |
| Breaking capacity code | D |

## Environment

| | |
|---|---|
| Product certifications | CULus |
| Ambient air temperature for operation | 104 °F (40 °C) |

## Offer Sustainability

| | |
|---|---|
| Sustainable offer status | Green Premium product |
| RoHS (date code: YYWW) | Compliant - since 1423 - Schneider Electric declaration of conformity<br>Schneider Electric declaration of conformity |
| REACh | Reference not containing SVHC above the threshold<br>Reference not containing SVHC above the threshold |
| Product environmental profile | Available |
| Product end of life instructions | Need no specific recycling operations |

**Date: June 11, 2019**

REVIEWED BY CONTRACTOR
Kudlik Construction Ltd.
NAME: Sandra Rousseau P.Eng
DATE: Jun 11, 2019

# Transmittal

**Arctic Electrical Nunavut Ltd**
PO Box 1381
Iqaluit, Nu.
X0A 0H0
Phone: 867-975-3494
**From: Lee Pitcher**

**Project** **Waste Waste Treatment Plant**
**Location** Iqaluit NU
**To** Kudlik Construction
Contact: Sandra Rousseau P.Eng.
srousseau@kudlik.biz



SE-16R2
PO-Guillevin-P19-078

Attached are the following items:

- [x] Drawings
- [ ] Prints
- [ ] Plans
- [x] Specifications
- [ ] Information
- [ ] Submittals

Other:

THESE ARE TRANSMITTED FOR:

- [ ] Prior Approval
- [ ] Approval
- [ ] Approval as Submitted
- [ ] Approval as Noted
- [x] Resubmittal for Approval
- [ ] Corrections
- [ ] Your Use
- [ ] Review and Comment
- [ ] Record

Bids due on:
Other:

| Qty | Type | MFG | Part |
|---|---|---|---|

26 12 17 Distribution Transformer

Provide a shop drawing for the 45kVA transformer

STANTEC PROJECT #: 110126045
SUBMITTAL # ELE-016-R2

This review by Stantec is for general conformance with the design concept of Stantec's design of the:

- [ ] Architectural
- [ ] Structural
- [ ] Mechanical
- [x] Electrical
- [ ] Other

component(s) only and does not mean that Stantec has verified or approves the shop drawing(s). The Contractor remains solely responsible for the shop drawing(s) and this review by Stantec does not relieve the Contractor of the Contractor's responsibility for errors or omissions in the shop drawing(s) or for meeting all requirements of the contract documents. This review does not mean that Stantec approves the detailed design inherent in the shop drawing, responsibility for which shall remain with the Contractor submitting same, nor does this review mean that Stantec accepts any deviation of the shop drawing(s) from the contract documents. The Contractor is responsible for confirming all dimensions and correlating them at the job site, for all construction means, methods and techniques, and for coordination of construction work of all trades, including coordination of all shop drawings.

Stantec

- [ ] REVIEWED
- [x] REVIEWED, AS NOTED
- [ ] REVISE AND RESUBMIT
- [ ] NOT REVIEWED

DATE 2019-06-12
BY Jamie McLeish

**Notes:**
Please review the attached approval drawings carefully. Production cannot be scheduled until a signed copy of the final approved drawing are received. Be aware that once drawings are approved, any errors due to incorrect information are the responsibility of the client.

Do not hesitate to contact me if you have any questions or concerns.

Hammond Power Solutions Inc.

# HPS Sentinel ® K

Energy Efficient Distribution Transformer

Transformateur de Distribution à Bon Rendement Énergétique

Hammond Power Solutions
Guelph, ONT
Compton, CA
Baraboo, WI
Monterrey, MX

Part No. SK3A0112PB4KB

® LR 3902

DRY TYPE TRANSFORMER
77U5
E112313
LISTED

ALSO VERIFIED IN ACCORDANCE TO ENERGY STANDARD C802.2–12

| | | | |
|---|---|---|---|
| Cust. Ref. / Ref. du Client | | Serial No. / No. de Serie | |
| Phase | 3 | HV/HT | 600V 108.3A |
| Type | K | BIL | 10 kV |
| Cooling / Refroidissement | ANN | Term / Bornes | H1 H2 H3 |
| kVA | 112.5 | LV/BT | 208Y/120V 312A |
| Temp. Rise / Echauffement | 80 °C | BIL | 10 kV |
| Temp Class / Classe Temp | 220 °C | Term / Bornes | X0 X1 X2 X3 |
| Winding / Enroulement | CU | Energy Regulations | DOE 10 CFR PART 431:2016 |
| Frequency / Frequence Hz | 60 | Reglements de Energetique | CEE ACT SOR/2018–201 |
| Impedance % @ 100 °C | 3.4 | Suitable for non–sinusoidal current load with K–factor not to exceed / Convient à des courants non–sinusoïdaux avec facteur K n'excédant pas | 4 |
| Encl Type / Type De Coffrage | 3R | | |
| Wt LBS / Poids en lbs | 950 | | |

| VOLTS | CURRENT / COURANT | % RATED VOLTAGE / % TENSION NOMINALE | CONNECTION EACH PHASE / CONNEXION PAR PHASE |
|---|---|---|---|
| 630 | 103.1 | 105 | 1 |
| 615 | 105.6 | 102.5 | 2 |
| 600 | 108.3 | 100 | 3 |
| 585 | 111 | 97.5 | 4 |
| 570 | 114 | 95 | 5 |
| 555 | 117 | 92.5 | 6 |
| 540 | 120 | 90 | 7 |

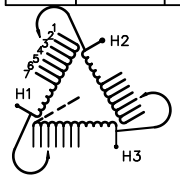


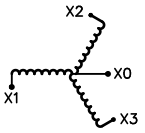


SPACINGS BETWEEN ANY VENTILATED ENCLOSURE PANEL AND ANY ADJACENT WALL SHALL BE A MINIMUM OF 5 INCHES EXCEPT WHEN WALL MOUNTED USING APPROVED WALL MOUNTING KIT
ELECTROSTATIC SHIELD

SEISMIC QUALIFICATIONS, OSP–0136–10
AS FLOOR MOUNT ONLY
IBC 2012/ASCE 7–10
SDS<=2.0g Z/h=1 Ip=1.5

d0001887hb

TITLE: 3PH DISTRIBUTION TRANSFORMER
NAMEPLATE INFORMATION

| NO. | DATE | BY | REVISION |
|---|---|---|---|
| | | | |

SCALE: NTS
DATE: 19/05/24
DES.: PPICASSI

SHEET 1 OF 3

EDB SK3A0112PB4KB

0.0 ppicassinos 2019/05/24 09:34

FRONT VIEW

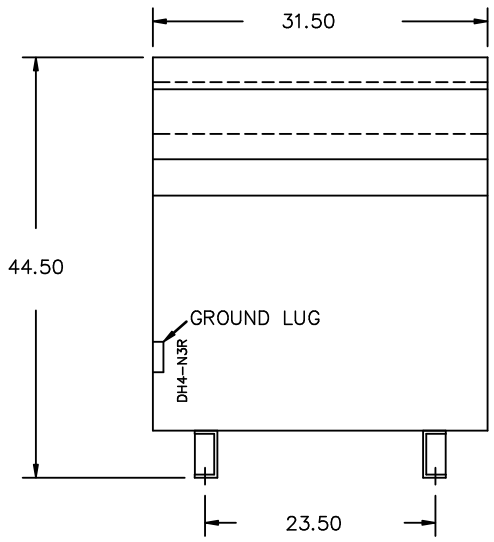


SIDE VIEW

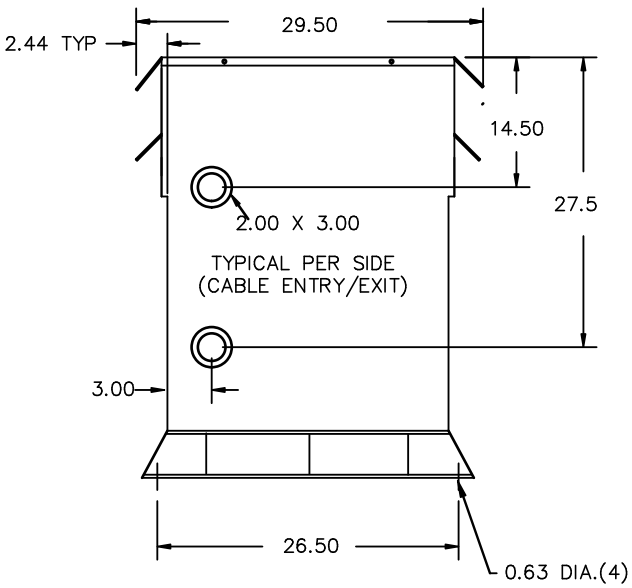


All Dimensions in inches

ENCLOSURE COLOR :ANSI 61 GREY – OUTDOOR

HV TERMINAL DETAIL

MECHANICAL TYPE LUGS INCLUDED
SUITABLE FOR 250MCM–6 CU/AL
CONDUCTORS
1 CONDUCTOR PER PHASE

LV TERMINAL DETAIL

MECHANICAL TYPE LUGS INCLUDED
SUITABLE FOR 350MCM–6 CU/AL
CONDUCTORS
2 CONDUCTORS PER PHASE

CUSTOMER NOTES:

– HV TERMINATED AT TOP FRONT
– LV TERMINATED AT BOTTOM FRONT
200% RATED NEUTRAL X0 HAS QTY 2 LUGS

Hammond Power Solutions Inc.

TITLE: 3PH DISTRIBUTION TRANSFORMER

| NO. | DATE | BY | REVISION |
|---|---|---|---|
| | | | |
| | | | |

DES: PPICASSI
DATE: 19/05/24
SCALE: NTS

SHEET 2 OF 3

EDB SK3A0112PB4KB

0.0 ppicassinos 2019/05/24 09:34

ENCLOSURE BOTTOM VIEW

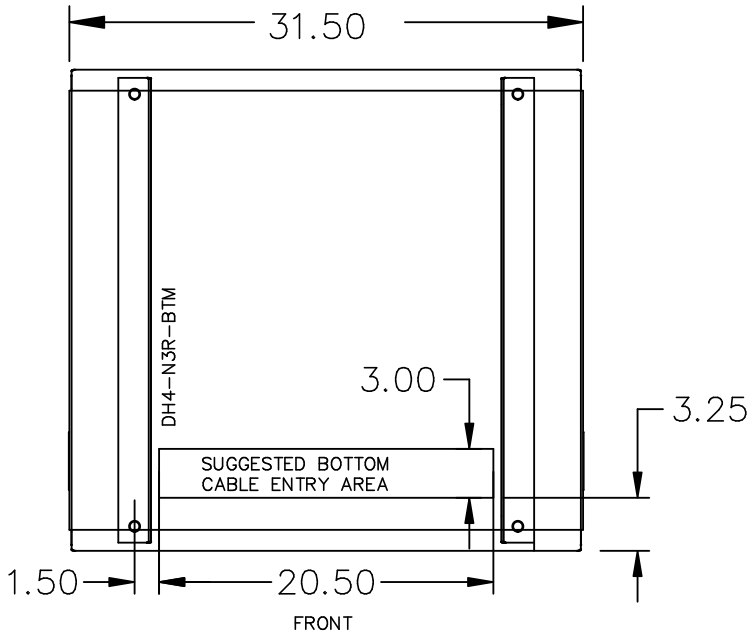


NOTE:
WHEN BOTTOM CABLE ENTRY IS OPTED, THE SPACE USED FOR CONDUITS IN THE FRONT OF THE TRANSFORMER SHOULD NOT OBSTRUCT MORE THAN 50% OF THE FRONT AIR INTAKE AREA DEFINED BETWEEN THE BOTTOM PLATE AND THE SUPPORTING LEGS.
SEE MANUAL FOR ADDITIONAL INFORMATION

Hammond Power Solutions Inc.

TITLE: 3PH DISTRIBUTION TRANSFORMER
ENCLOSURE BOTTOM VIEW

| NO. | DATE | BY | REVISION |
|---|---|---|---|
| | | | |
| | | | |

DES: PPICASSI
DATE: 19/05/24
SCALE: NTS

SHEET 3 OF 3

EDB SK3A0112PB4KB

0.0 ppicassinos 2019/05/24 09:34

# ACCESSORIES (for transformers listed in sections 3, 4, 7, 10 and 11)

## ANTI-VIBRATION PAD AND VIBRATION ISOLATOR KITS

All standard transformers come with installed internal vibration absorbing pads to minimize noise during operation. Optional external "anti-vibration" pad and "vibration isolator" (for higher noise dampening) kits can be used to reduce operating noise even further. All are resistant to industrial contaminants like oils, acids and alkalies.

### ANTI-VIBRATION PAD KITS

| Part No. | Case Style | Description |
|---|---|---|
| **P1** | NH Series | Set of four (4) rubber anti-vibration pads which replace the standard steel enclosure washers. |
| **P2** | NJ Series | |



**All Anti-Vibration Pad kits and Vibration Isolator kits contain a set of four (4) pads or isolators. Therefore only one kit is required per transformer.**

### VIBRATION ISOLATOR KITS

| Part No. | Transformer Weight (Lb) | Description |
|---|---|---|
| **NMP1** | Up to 340 lbs | Set of four (4) molded neoprene and steel plate assemblies that virtually eliminate vibration noise between the transformer and the mounting surface. |
| **NMP2** | 341 to 680 lbs | |
| **NMP3** | 681 to 1040 lbs | |
| **NMP4** | 1041 to 1740 lbs | |
| **NMP5** | 1741 to 2330 lbs | |
| **NMP6** | 2331 to 3450 lbs | |
| **NMP7** | 3451 to 4690 lbs | |

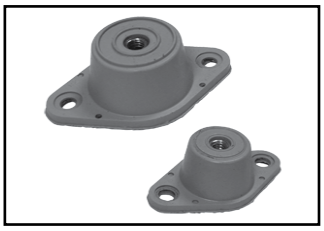

# ACCESSORIES (for transformers listed in sections 8 and 10)

## NQTW1 and NQTW2 Wall Mounting Kits

The **NQTW1 and NQTW2** wall mounting kits are specifically designed for HPS commercial or industrial encapsulated (potted) distribution transformer units up to a maximum of 45kVA or 800 pounds (363 kg). These mounting kits are designed for encapsulated (potted) units only, no drip plate is included/required. Please contact HPS customer service if you have any questions.

**Note:** Always measure and secure mounting brackets to the wall surface first, then lift the transformer (using appropriate lifting equipment) onto the brackets and attach using minimum Grade 8 hardware.

| Enclosure Case Style | Mounting Type | Wall Mounting Kit Part Number |
|---|---|---|
| NQ0-NQ8 | Wall | **Included** |
| NQS10 | Wall or Floor | **NQTW2** |
| NQT3-NQT6 | Wall | **Included** |
| NQT7-NQT8 | Wall or Floor | **NQTW1** |
| NQT9A | Floor | **N/A** |
| NQT9* | Wall or Floor | **NQTW2** |

*Applies to HPS Fortress line only.

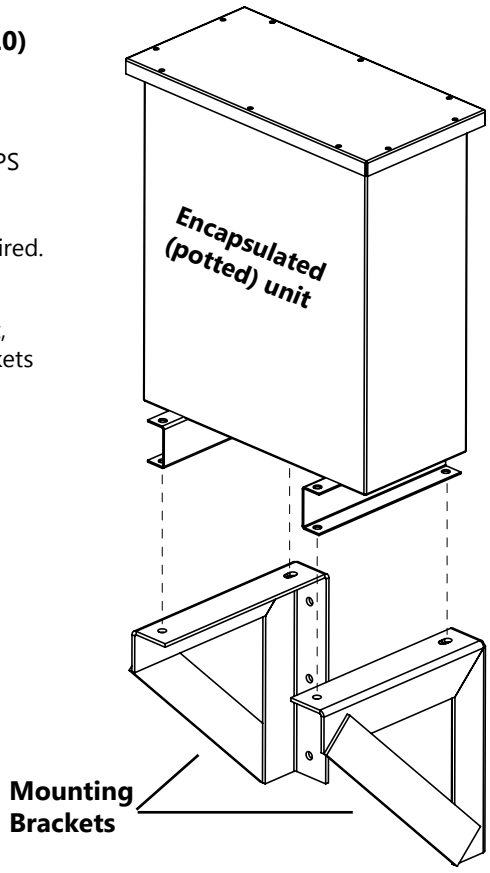





© Hammond Power Solutions Inc.
Data subject to change without notice.

Hammond Power Solutions Inc.

# HPS Sentinel ® G

Energy Efficient Distribution Transformer
Transformateur de Distribution à Bon Rendement Énergétique

Hammond Power Solutions
Guelph, ONT / Compton, CA
Baraboo, WI / Monterrey, MX

Part No. SG3A0045PK0CB

LR 3902
DRY TYPE TRANSFORMER 77US E112313
LISTED
ALSO VERIFIED IN ACCORDANCE TO ENERGY STANDARD C802.2-12

| | | | |
|---|---|---|---|
| Cust. Ref. / Ref. du Client | | Serial No. / No. de Serie | |
| Phase | 3 | HV/HT | 600V |
| Type | K | BIL | 10 |
| Cooling / Refroidissement | ANN | Term / Bornes | H1 H2 H3 |
| kVA | 45 | LV/BT | 480Y/277V |
| Temp. Rise / Echauffement | 80 °C | BIL | 10 |
| Temp Class / Classe Temp | 220 °C | Term / Bornes | X0 X1 X2 X3 |
| Winding / Enroulement | CU | Energy Regulations | DOE 10 CFR PART 431:2016 |
| Frequency / Frequence Hz | 60 | Reglements de Energetique | CEE ACT SOR/2016-311 AMENDMENT 14 |
| Impedance % @ 100 °C | 1.8 | | |
| Encl Type / Type De Coffrage | 3R | | |
| Wt LBS / Poids en lbs | 650 | | |

| VOLTS | CURRENT COURANT | % RATED VOLTAGE % TENSION NOMINALE | CONNECTION EACH PHASE CONNEXION PAR PHASE |
|---|---|---|---|
| 630 | 41.2 | 105 | 1 |
| 615 | 42.2 | 102.5 | 2 |
| 600 | 43.3 | 100 | 3 |
| 585 | 44.4 | 97.5 | 4 |
| 570 | 45.6 | 95 | 5 |
| 555 | 46.8 | 92.5 | 6 |
| 540 | 48.1 | 90 | 7 |

SPACINGS BETWEEN ANY VENTILATED ENCLOSURE PANEL AND ANY ADJACENT WALL SHALL BE A MINIMUM OF 5 INCHES EXCEPT WHEN WALL MOUNTED USING APPROVED WALL MOUNTING KIT

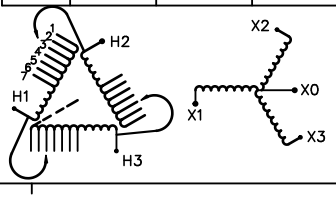


SEISMIC QUALIFICATIONS, OSP-0136-10
AS FLOOR MOUNT ONLY
IBC 2012/ASCE 7-10
SDS<=2.0g Z/h=1 Ip=1.5

d0001886b

| NO. | DATE | BY | REVISION |
|---|---|---|---|
| 1 | 17/04/03 | JW | ADDED ENCL BOTTOM DRAWING |

TITLE: 3PH DISTRIBUTION TRANSFORMER
NAMEPLATE INFORMATION

SCALE: NTS
DATE: 15/11/09
DES.: JWEN

SHEET 1 OF 3

EDB SG3A0045PK0CB

1.1 jwen 2017/11/09 10:03

FRONT VIEW

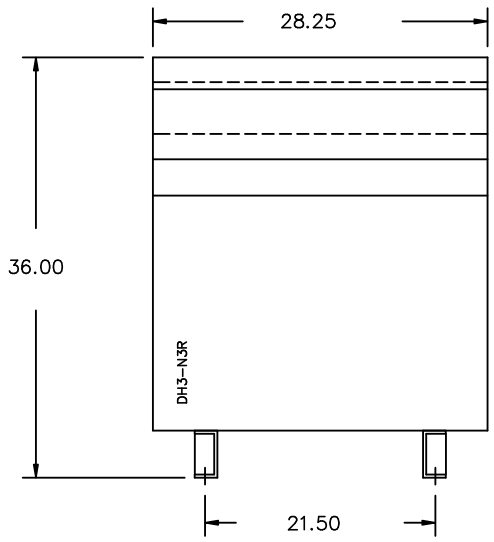


SIDE VIEW

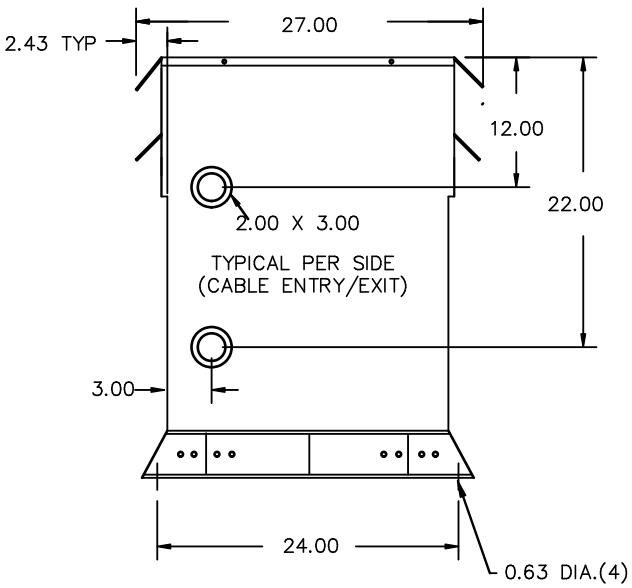


All Dimensions in inches

ENCLOSURE COLOR :ANSI 61 GREY – OUTDOOR

H.V.1. TERMINAL DETAIL

MECHANICAL TYPE LUGS INCLUDED
SUITABLE FOR #2/0–14 CU/AL
CONDUCTORS
1 CONDUCTOR PER PHASE

L.V.1. TERMINAL DETAIL

MECHANICAL TYPE LUGS INCLUDED
SUITABLE FOR #2/0–14 CU/AL
CONDUCTORS
1 CONDUCTOR PER PHASE

CUSTOMER NOTES:
- HV1 TERMINATED AT TOP FRONT
- LV1 TERMINATED AT BOTTOM FRONT

Hammond Power Solutions Inc.

TITLE: 3PH DISTRIBUTION TRANSFORMER

| NO. | DATE | BY | REVISION |
|---|---|---|---|
| 1 | 17/04/03 | JW | ADDED ENCL BOTTOM DRAWING |

DES: JWEN
DATE: 15/11/09
SCALE: NTS

SHEET 2 OF 3

EDB SC3A0045PKOCB

1.1 jwen 2017/11/09 10:03

ENCLOSURE BOTTOM VIEW

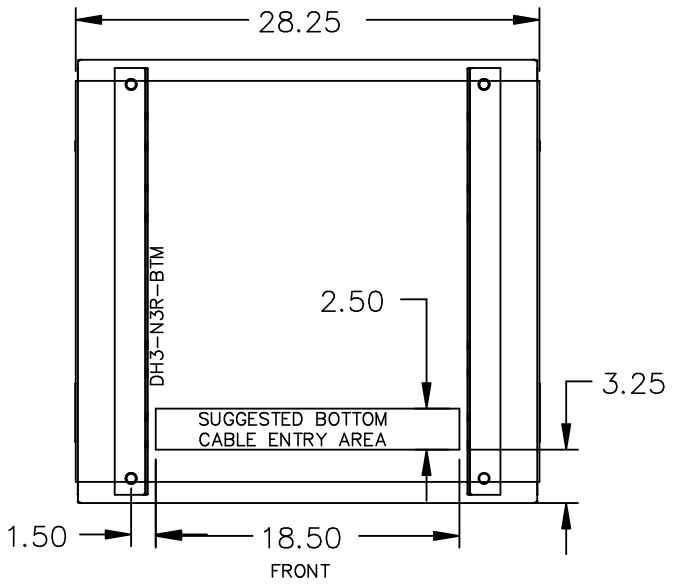


NOTE:
WHEN BOTTOM CABLE ENTRY IS OPTED, THE SPACE USED FOR CONDUITS IN THE FRONT OF THE TRANSFORMER SHOULD NOT OBSTRUCT MORE THAN 50% OF THE FRONT AIR INTAKE AREA DEFINED BETWEEN THE BOTTOM PLATE AND THE SUPPORTING LEGS.
SEE MANUAL FOR ADDITIONAL INFORMATION

Hammond Power Solutions Inc.

TITLE: 3PH DISTRIBUTION TRANSFORMER
ENCLOSURE BOTTOM VIEW

| NO. | DATE | BY | REVISION | |
|---|---|---|---|---|
| 1 | 17/04/03 | JW | ADDED ENCL BOTTOM DRAWING | DES: JWEN |
| | | | | DATE: 15/11/09 |
| | | | | SCALE: NTS |

SHEET 3 OF 3

EDB SC3A0045PK0CB

1.1 jwen 2017/11/09 10:03

Arctic Electrical Nunavut Ltd
PO Box 1381, Iqaluit, NU X0A 0H0 -P867-975-3494

# 26 24 19 Motor Control Centres

**Date: July 11, 2019**

REVIEWED BY CONTRACTOR
Kudlik Construction Ltd.
NAME: Sandra Rousseau P.Eng
DATE: Jul 11, 2019

# Transmittal

**Arctic Electrical Nunavut Ltd**
PO Box 1381
Iqaluit, Nu.
X0A 0H0
Phone: 867-975-3494
**From: Lee Pitcher**

**Project** **Waste Waste Treatment Plant**
**Location** Iqaluit NU
**To** Kudlik Construction
Contact: Sandra Rousseau P.Eng.
srousseau@kudlik.biz



SE-18R4 SU-ELE18R4
PO-P19-108 Nedco

Attached are the following items:

- [x] Drawings
- [ ] Prints
- [ ] Plans
- [x] Specifications
- [ ] Information
- [ ] Submittals

Other:

THESE ARE TRANSMITTED FOR:

- [ ] Prior Approval
- [ ] Approval
- [ ] Approval as Submitted
- [ ] Approval as Noted
- [x] Resubmittal for Approval
- [ ] Corrections
- [ ] Your Use
- [ ] Review and Comment
- [ ] Record

Bids due on:
Other:

| Qty | Type | MFG | Part |
|---|---|---|---|

26 24 19 Motor Control Centres

STANTEC PROJECT #: 110126045
SUBMITTAL # ELE 018-R4

This review by Stantec is for general conformance with the design concept of Stantec's design of the:

- [ ] Architectural
- [ ] Structural
- [ ] Mechanical
- [x] Electrical
- [ ] Other _____

component(s) only and does not mean that Stantec has verified or approves the shop drawing(s). The Contractor remains solely responsible for the shop drawing(s) and this review by Stantec does not relieve the Contractor of the Contractor's responsibility for errors or omissions in the shop drawing(s) or for meeting all requirements of the contract documents. This review does not mean that Stantec approves the detailed design inherent in the shop drawing, responsibility for which shall remain with the Contractor submitting same, nor does this review mean that Stantec accepts any deviation of the shop drawing(s) from the contract documents. The Contractor is responsible for confirming all dimensions and correlating them at the job site, for all construction means, methods and techniques, and for coordination of construction work of all trades, including coordination of all shop drawings.

Stantec

- [ ] REVIEWED
- [x] REVIEWED, AS NOTED
- [ ] REVISE AND RESUBMIT
- [ ] NOT REVIEWED

DATE 2019-07-12
BY Jamie McLeish

Note, contractor remains responsible for the shop drawing content and coordination with other disciplines. Stantec's review does not relieve the contractor of their contractual responsibility.

**Notes:**
Please review the attached approval drawings carefully. Production cannot be scheduled until a signed copy of the final approved drawing are received. Be aware that once drawings are approved, any errors due to incorrect information are the responsibility of the contractor.

Do not hesitate to contact me if you have any questions or concerns.

SQUARE D
by Schneider Electric

| | | | |
|---|---|---|---|
| Job Name: | IQALUIT WWTP MCC UPGRADES | Square D Quotation #: | 41428112 |
| Job Location: | SALABERRY–DE–VALLEYFIELD, QC | Quotation Revision #: | |
| | | Sales Contact: | CURTIS DADSWELL |
| | | Sales Contact Location: | 817 |
| Purchaser: | 23010–NEDCO DIV OF REXEL CANADA | Customer: | ARCTIC ELECTRIC |
| Purchaser PO #: | (WR2)14265D | Customer PO #: | |
| User: | | Architect: | |
| User Location: | | Cons. Engineer: | |
| Drawing Status: | APPROVAL | | |

# TABLE OF CONTENTS

SQUARE D FACTORY ORDER NUMBER: 41428112–001


| Equipment Designation | Equipment Type | Drawing Type | Drawing Number | Page | Revision Level |
|---|---|---|---|---|---|
| MCC – 1 | MODEL 6 MCC | ELEVATION | F41428112–001–01 | 1 | C |
| | | | F41428112–001–01 | 2 | C |
| | | | F41428112–001–01 | 3 | C |
| | | SEISMIC | S41428112–001–01 | 1 | C |
| | | ONE LINE DIAGRAM | O41428112–001–01 | 1 | C |
| | | | O41428112–001–01 | 2 | C |
| | | UNIT INFORMATION | I41428112–001–01 | 1 | C |
| | | | I41428112–001–01 | 2 | C |
| | | | I41428112–001–01 | 3 | C |
| | | | I41428112–001–01 | 4 | C |
| | | | I41428112–001–01 | 5 | C |
| | | ELEMENTARY | E41428112–001–01 | 1 | C |
| | | | E41428112–001–02 | 1 | C |
| | | | E41428112–001–03 | 1 | C |
| | | | E41428112–001–04 | 1 | C |
| | | | E41428112–001–04 | 2 | C |
| | | | E41428112–001–05 | 1 | C |
| | | | E41428112–001–05 | 2 | C |
| | | | E41428112–001–06 | 1 | C |
| | | | E41428112–001–06 | 2 | C |
| | | | E41428112–001–07 | 1 | C |
| | | | E41428112–001–07 | 2 | C |
| | | | E41428112–001–08 | 1 | C |
| | | | E41428112–001–08 | 2 | C |
| | | | E41428112–001–09 | 1 | C |
| | | | E41428112–001–09 | 2 | C |
| | | | E41428112–001–10 | 1 | C |
| | | | E41428112–001–10 | 2 | C |
| | | | E41428112–001–11 | 1 | C |
| | | | E41428112–001–11 | 2 | C |
| | | | E41428112–001–12 | 1 | C |
| | | | E41428112–001–13 | 1 | C |

# TABLE OF CONTENTS

SQUARE D FACTORY ORDER NUMBER: 41428112-001


| Equipment Designation | Equipment Type | Drawing Type | Drawing Number | Page | Revision Level |
|---|---|---|---|---|---|
| | | | E41428112-001-13 | 2 | C |

| REV | DESCRIPTION | BY | DATE | | | | | | | | |
|---|---|---|---|---|---|---|---|---|---|---|---|
| – | ---- | -- | --/--/-- | A | APPROVAL RESUBMIT | RN | 06/19/2019 | C | APPROVAL RESUBMITAL | MLC | 07/11/2019 |
| | | | | B | REAPPROVAL | TA | 06/21/2019 | – | ---- | -- | --/--/-- |

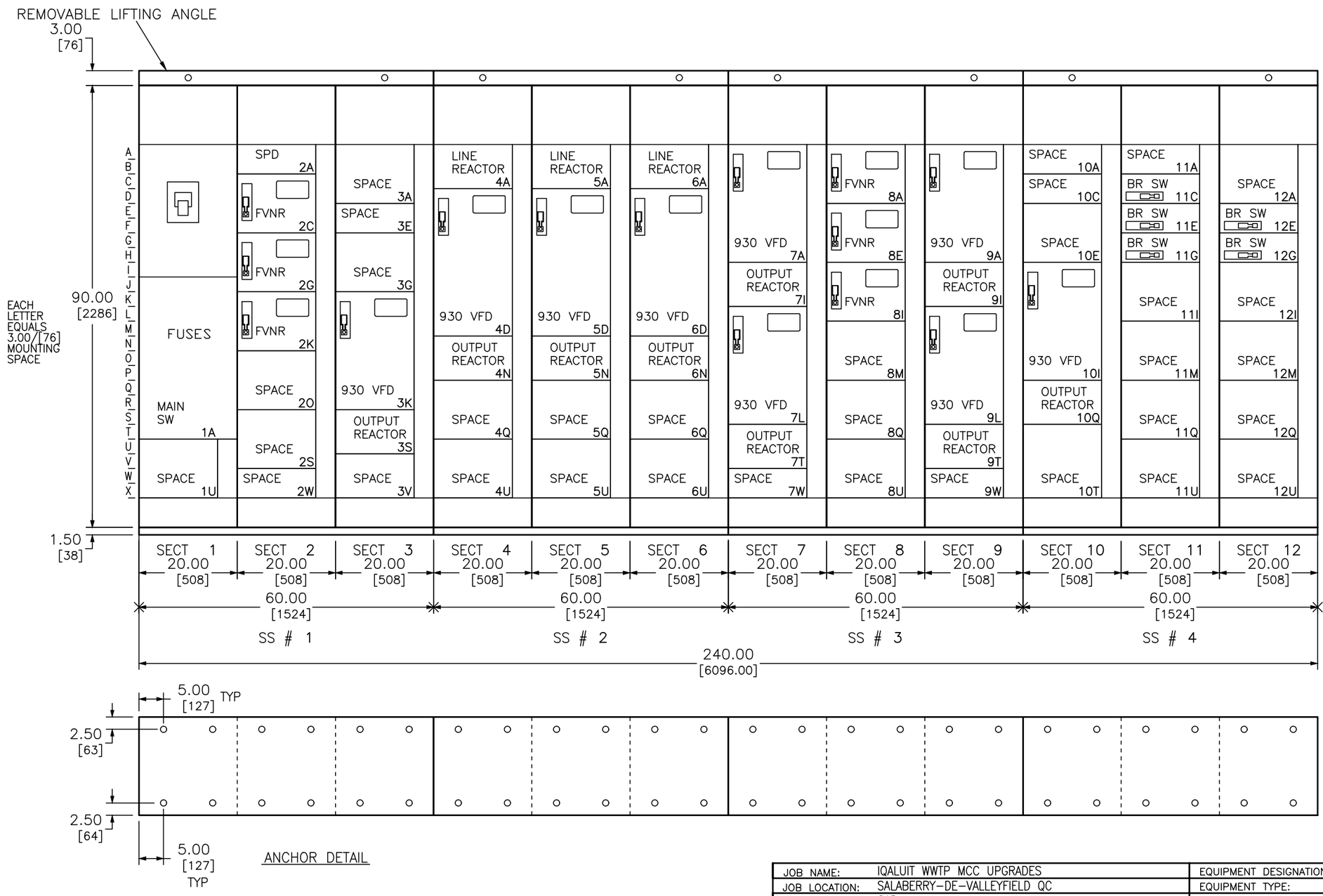


ANCHOR DETAIL

DUAL DIMENSIONS: INCHES
MILLIMETERS

| | | | |
|---|---|---|---|
| JOB NAME: | IQALUIT WWTP MCC UPGRADES | EQUIPMENT DESIGNATION: | **MCC – 1** |
| JOB LOCATION: | SALABERRY-DE-VALLEYFIELD QC | EQUIPMENT TYPE: | MODEL 6 MOTOR CONTROL CENTER |
| DRAWN BY: | CAD | DRAWING TYPE: | ELEVATION |
| ENGR: | MLC | | SQUARE D by Schneider Electric |
| DATE: | MAY 21, 2019 | | |
| DRAWING STATUS: | APPROVAL | DWG# | **F41428112-001-01** PG 1 OF 3 REV C |

| REV | DESCRIPTION | BY | DATE | | | | | | | | |
|---|---|---|---|---|---|---|---|---|---|---|---|
| B | REAPPROVAL | TA | 06/21/2019 | C | APPROVAL RESUBMITAL | MLC | 07/11/2019 | – | ---- | -- | --/--/-- |
| | | | | A | APPROVAL RESUBMIT | RN | 06/19/2019 | – | ---- | -- | --/--/-- |

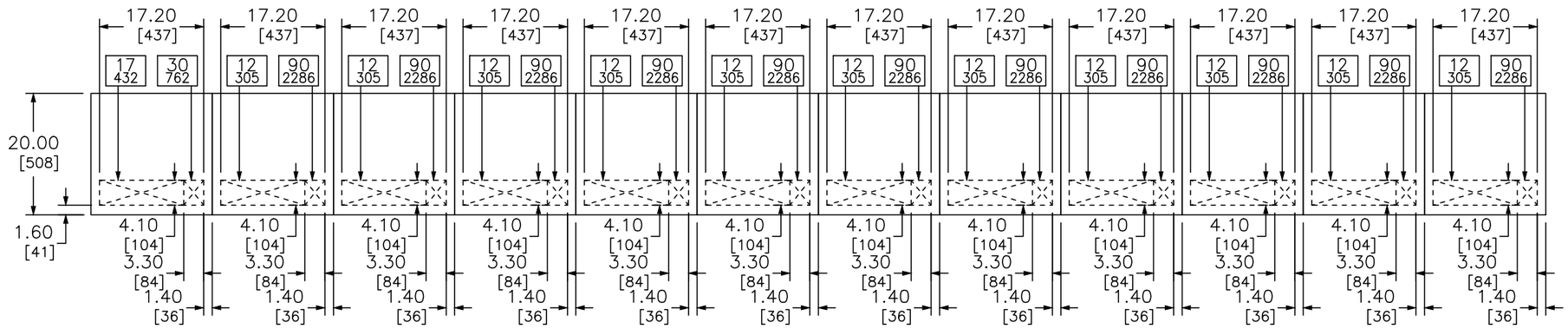


TOP VIEW

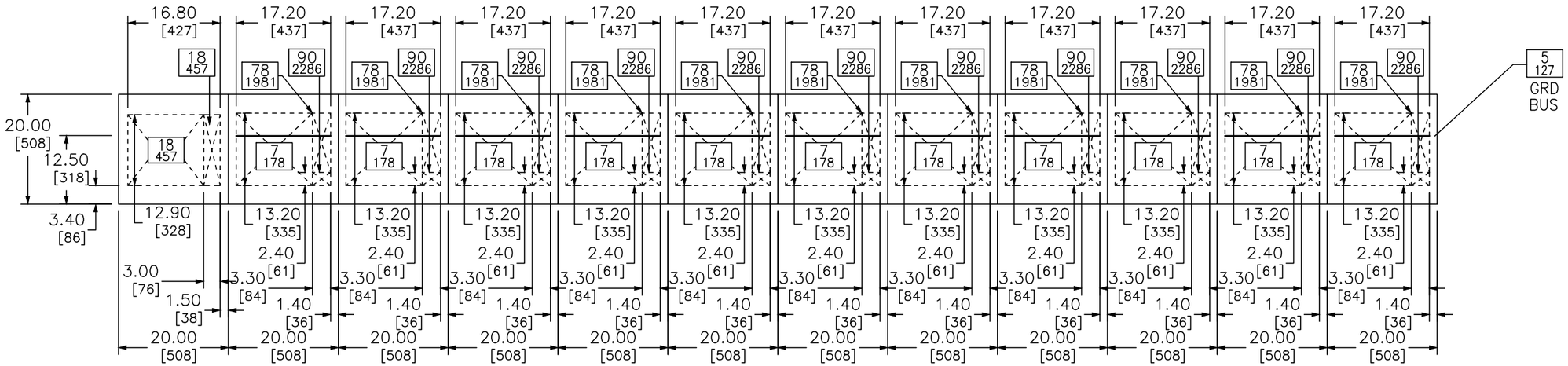


DUAL DIMENSIONS: INCHES
MILLIMETERS

FLOOR VIEW

CROSSED AREA REPRESENTS CONDUIT ENTRY AREA. NUMBERS IN BOXES INDICATE VERTICAL CLEARANCE TO NEAREST OBSTRUCTION.

| | | | |
|---|---|---|---|
| JOB NAME: | IQALUIT WWTP MCC UPGRADES | EQUIPMENT DESIGNATION: | MCC – 1 |
| JOB LOCATION: | SALABERRY-DE-VALLEYFIELD QC | EQUIPMENT TYPE: | MODEL 6 MOTOR CONTROL CENTER |
| DRAWN BY: | CAD | DRAWING TYPE: | ELEVATION |
| ENGR: | MLC | | SQUARE D by Schneider Electric |
| DATE: | MAY 21, 2019 | | |
| DRAWING STATUS: | APPROVAL | DWG# | F41428112-001-01 |

| REV | DESCRIPTION | BY | DATE | | | | | | | | |
|---|---|---|---|---|---|---|---|---|---|---|---|
| B | REAPPROVAL | TA | 06/21/2019 | C | APPROVAL RESUBMITAL | MLC | 07/11/2019 | – | ---- | -- | --/--/-- |
| | | | | A | APPROVAL RESUBMIT | RN | 06/19/2019 | – | ---- | -- | --/--/-- |

# GENERAL NOTES

Class 1 Type B Wiring

## PRODUCT DESCRIPTION AND RATINGS

### POWER SYSTEM DATA:

600V 3PH 3W 60Hz
SHORT CIRCUIT RATING: 65kA
POWER ENTERS: Main Fusible Switch Top Section 1
CONTROL POWER: 120Vac

### BUS SYSTEM DATA:

MAIN HORIZONTAL BUS: 800 Amp Copper/Tin Plated / 1.5"
BUS BRACING: 65kA
VERTICAL BUS: 300 Amp Tin Plated Copper
HORIZONTAL GROUND BUS: .25" X 1.0" (6.35mm X 25.4mm) Tin Plated Copper
Units Securely Grounded To Structure

### ENCLOSURE DATA:

ENCLOSURE TYPE: 20" DEEP Type 1A
EXTERIOR COLOR: Electrodeposition Finish ANSI 49 Medium Light Grey
INTERIOR COLOR: Electrodeposition Finish White
REMOVABLE 3" [76mm] LIFTING ANGLE

### STRUCTURE MODIFICATIONS:

Ground Bus Lug : Main Section
Rodent Barriers 1,12
Manual Bus Shutters 1,2,3,4,5,6,7,8,9,10,11,12
Premium Barrier System 1,2,3,4,5,6,7,8,9,10,11,12
Copper Vertical Ground Bus 1,2,3,4,5,6,7,8,9,10,11,12
Wire Retainers 1,2,3,4,5,6,7,8,9,10,11,12

### EQUIPMENT WEIGHT:

SHIPPING SPLIT # 1: 2250.00 Lbs. (1020.60 Kg.)
SHIPPING SPLIT # 2: 2250.00 Lbs. (1020.60 Kg.)
SHIPPING SPLIT # 3: 2250.00 Lbs. (1020.60 Kg.)
SHIPPING SPLIT # 4: 2250.00 Lbs. (1020.60 Kg.)
TOTAL LINEUP WEIGHT (APPROX): 9000.00 Lbs. (4082.40 Kg.)

### PRODUCT ACCESSORIES:

Seismic Qualified IBC/ASCE7
Drip Hoods

| | | | |
|---|---|---|---|
| JOB NAME: | IQALUIT WWTP MCC UPGRADES | EQUIPMENT DESIGNATION: | MCC – 1 |
| JOB LOCATION: | SALABERRY-DE-VALLEYFIELD QC | EQUIPMENT TYPE: | MODEL 6 MOTOR CONTROL CENTER |
| DRAWN BY: | CAD | DRAWING TYPE: | ELEVATION |
| ENGR: | MLC | | SQUARE D by Schneider Electric |
| DATE: | MAY 21, 2019 | | |
| DRAWING STATUS: | APPROVAL | DWG# | F41428112-001-01 |

| REV | DESCRIPTION | BY | DATE | | | | | | | | |
|---|---|---|---|---|---|---|---|---|---|---|---|
| B | REAPPROVAL | TA | 06/21/2019 | A | APPROVAL RESUBMIT | RN | 06/21/2019 | – | ---- | -- | --/--/-- |
| | | | | C | APPROVAL RESUBMITAL | MLC | 07/11/2019 | – | ---- | -- | --/--/-- |

# REQUIREMENTS FOR SEISMIC RATING

## ANCHORING CONDITIONS:

To Maintain Seismic Qualifications, Equipment Must Be Installed Per Installation Manual 80459–641–XX And Per Any Seismic Anchoring Details Provided By Others. Do Not Install Equipment Before Approved Seismic Anchoring Details Have Been Obtained And Site Preparations Have Been Made In Accordance With The Approved Seismic Anchoring Details. All Post–Installed Anchors Shall Be Approved For Seismic Loads.

Consideration Must Be Made For Conduit Entry Into Each Section When Developing Mounting Pad Reinforcement Locations. See Conduit Entry Details For Dimensional Information.

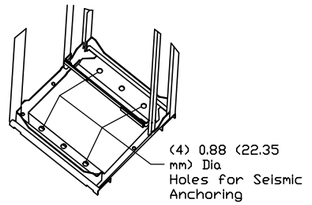


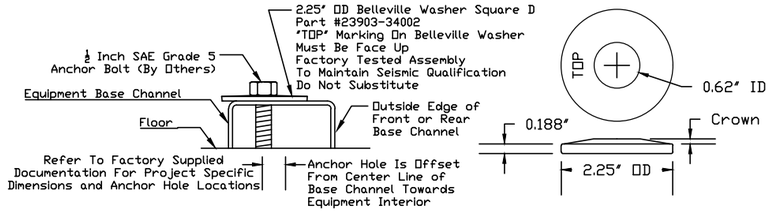


Each MCC Section Must Be Anchored At Four Locations (See Above Details). Anchor Bolt Mounting Points Are .88/[22] Diameter Holes Located 1.50/[38] Above The Base Of The MCC Section. Use Dimensions From The Anchor Detail To Determine Mounting Locations.

The Belleville Washer (Shown In Detail Above) Used For Anchoring Connections Is A Tested Component And Is Required To Maintain Position Retention Of The Equipment. The Slip Critical Connection Performance Of The Bolted Connection Was Established To The Shake Table Tested Seismic Capacity Of The Equipment As Shown On The Equipment Seismic Certificate Supplied At The Time Of Order.

## CENTER OF GRAVITY:

The CG Information Provided Below Should Only Be Used For Seismic Anchoring Calculations.

Elevation Center Of Gravity: 62.00/[1575] Up From Floor Except Masterpact NW Main Use 54.00/[1372] Up From Floor

Depth Center Of Gravity: 7.50/[191] or 10.00/[254] From Rear For 15.00/[381] or 20.00/[508] Deep Sections Respectively. Consult Factory For Sections Taller Than 94.50/[2400].

Vertical Center of Gravity: Use Centerline Of Section From Left To Right

## SECTION WEIGHTS:

The Weights Shown Below Should Only Be Used For Calculating Seismic Anchoring Requirements And Do Not Represent Actual Section Weights As Shipped.

| | |
|---|---|
| 1200 Lbs. (544.3 Kg.) | 35.00/[889] Wide Sections |
| 1300 Lbs. (589.7 Kg.) | 20.00/[508] Wide Sections |
| 1500 Lbs. (680.4 Kg.) | 25.00/[635] And 30.00/[762] Wide Sections* |
| *1900 Lbs. (861.8 Kg.) | 30.00/[762] Wide Section With Masterpact NW Main |
| 2250 Lbs. (1020.6 Kg.) | 50.00/[1270] Wide Section With 18 Pulse Drive |
| 2750 Lbs. (1247.4 Kg.) | 65.00/[1651] Wide Section With 18 Pulse Drive |

| | | | |
|---|---|---|---|
| JOB NAME: | IQALUIT WWTP MCC UPGRADES | EQUIPMENT DESIGNATION: | MCC – 1 |
| JOB LOCATION: | SALABERRY–DE–VALLEYFIELD QC | EQUIPMENT TYPE: | MODEL 6 MOTOR CONTROL CENTER |
| DRAWN BY: | CAD | DRAWING TYPE: | SEISMIC |
| ENGR: | MLC | | SQUARE D by Schneider Electric |
| DATE: | MAY 21, 2019 | | |
| DRAWING STATUS: | APPROVAL | DWG# S41428112–001–01 | PG 1 OF 1 REV C |

| REV | DESCRIPTION | BY | DATE | | | | | | | | |
|---|---|---|---|---|---|---|---|---|---|---|---|
| B | REAPPROVAL | TA | 06/21/2019 | A | APPROVAL RESUBMIT | RN | 06/19/2019 | – | ---- | -- | --/--/-- |
| | | | | C | APPROVAL RESUBMITAL | MLC | 07/11/2019 | – | ---- | -- | --/--/-- |

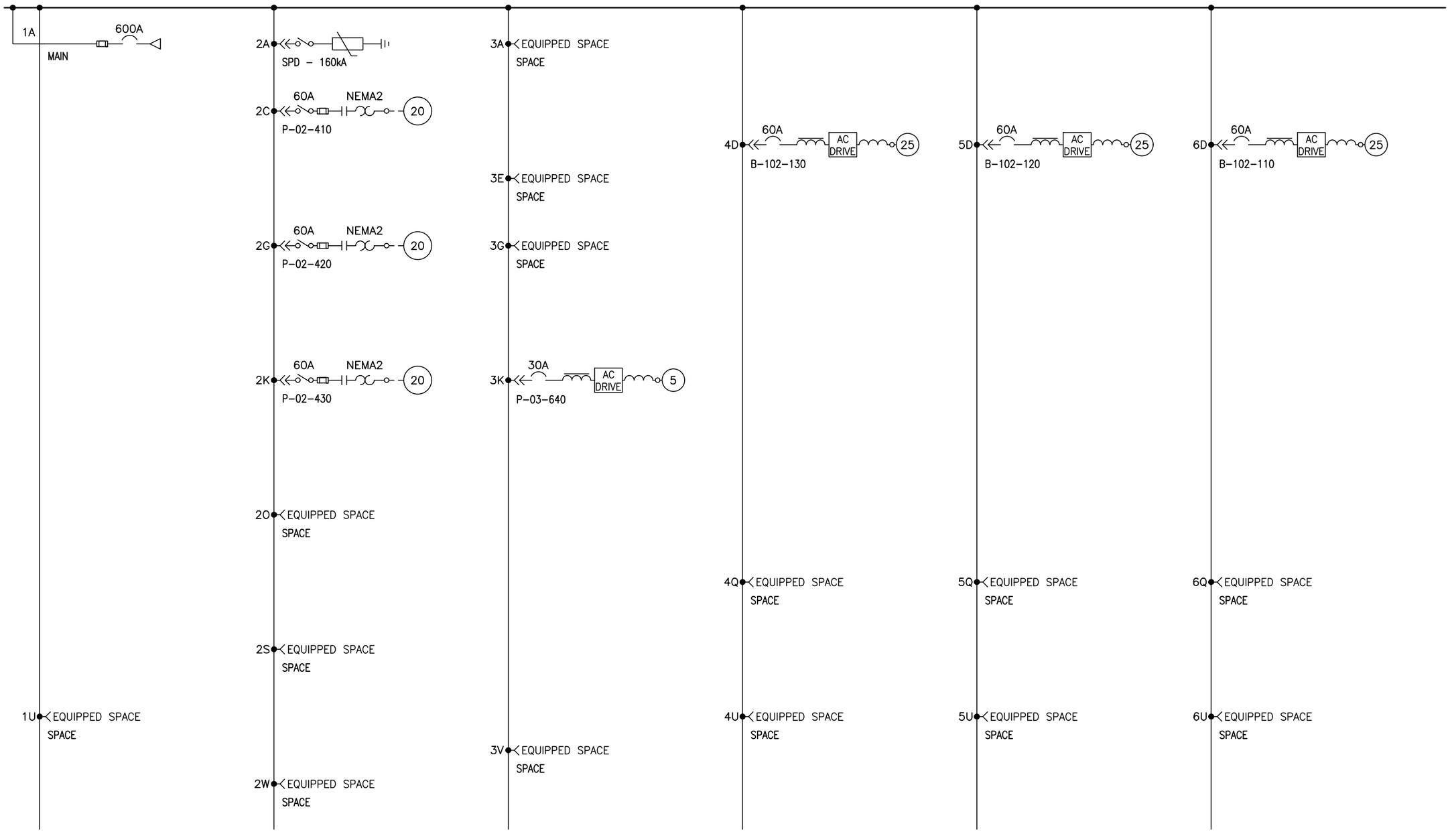


| | | | |
|---|---|---|---|
| JOB NAME: | IQALUIT WWTP MCC UPGRADES | EQUIPMENT DESIGNATION: | **MCC – 1** |
| JOB LOCATION: | SALABERRY–DE–VALLEYFIELD QC | EQUIPMENT TYPE: | MODEL 6 MOTOR CONTROL CENTER |
| DRAWN BY: | CAD | DRAWING TYPE: | ONE LINE DIAGRAM |
| ENGR: | MLC | | SQUARE D by Schneider Electric |
| DATE: | MAY 21, 2019 | | |
| DRAWING STATUS: | APPROVAL | DWG# | **041428112–001–01** |

| REV | DESCRIPTION | BY | DATE | | | | | | | | |
|---|---|---|---|---|---|---|---|---|---|---|---|
| B | REAPPROVAL | TA | 06/21/2019 | A | APPROVAL RESUBMIT | RN | 06/19/2019 | – | ---- | -- | --/--/-- |
| | | | | C | APPROVAL RESUBMITAL | MLC | 07/11/2019 | – | ---- | -- | --/--/-- |

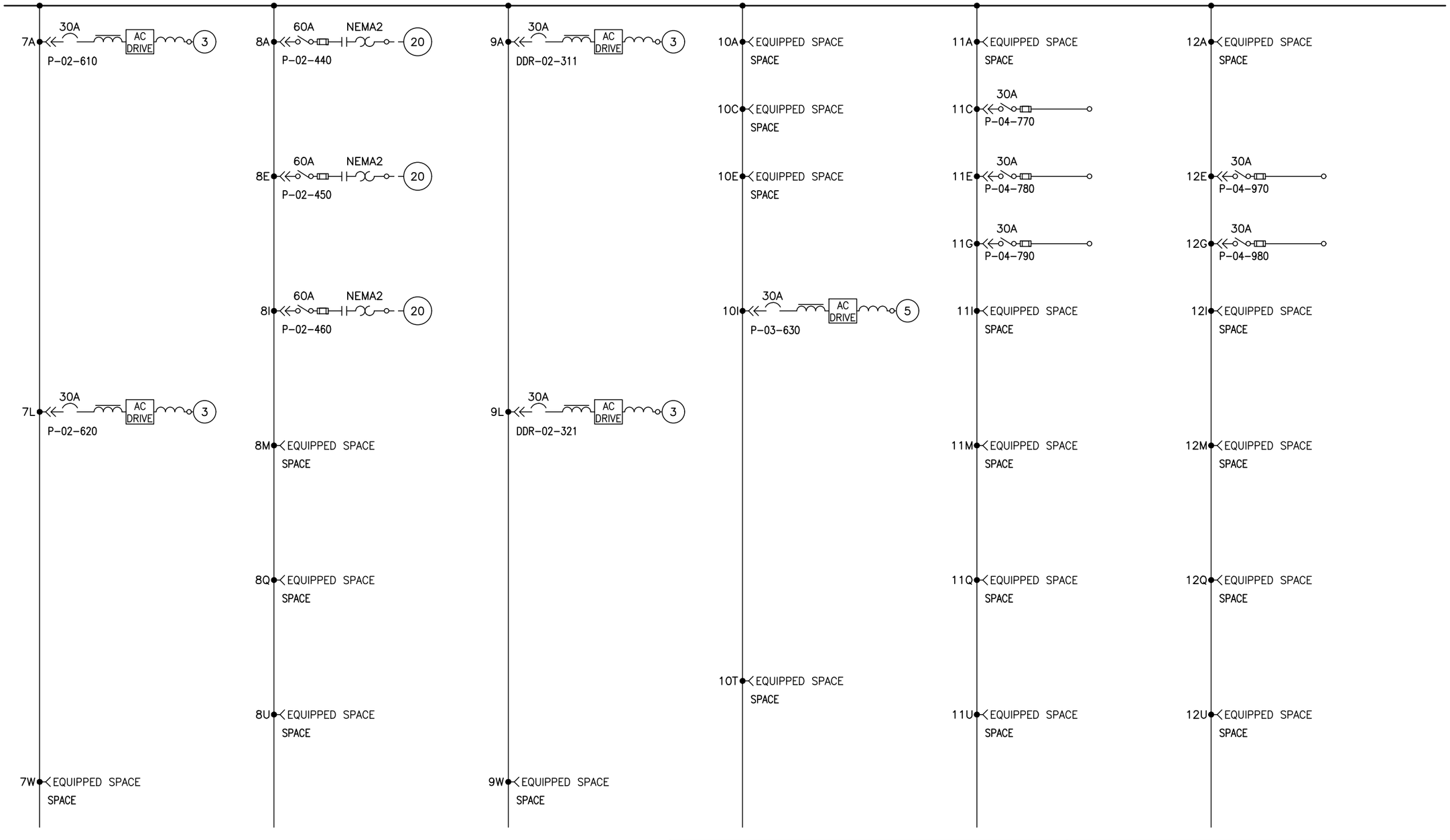


| | | | |
|---|---|---|---|
| JOB NAME: | IQALUIT WWTP MCC UPGRADES | EQUIPMENT DESIGNATION: | **MCC – 1** |
| JOB LOCATION: | SALABERRY-DE-VALLEYFIELD QC | EQUIPMENT TYPE: | MODEL 6 MOTOR CONTROL CENTER |
| DRAWN BY: | CAD | DRAWING TYPE: | ONE LINE DIAGRAM |
| ENGR: | MLC | | SQUARE D by Schneider Electric |
| DATE: | MAY 21, 2019 | | |
| DRAWING STATUS: | APPROVAL | DWG# **041428112-001-01** | PG **2** OF **2** REV C |

| REV | DESCRIPTION | BY | DATE |
|---|---|---|---|
| – | ---- | -- | --/--/-- |

| | | | | | | | | | | | | | | | | | |
|---|---|---|---|---|---|---|---|---|---|---|---|---|---|---|---|---|---|
| A | APPROVAL RESUBMIT | RN | 06/19/2019 | C | APPROVAL RESUBMITAL | MLC | 07/11/2019 |
| B | REAPPROVAL | TA | 06/21/2019 | – | ---- | -- | --/--/-- |

| UNIT LOC | UNIT NAMEPLATES (WHITE SURFACE/BLACK LETTERS) | UNIT TYPE | SIZE | HP | FRAME AMPS | TRIP AMPS | CONTROL SOURCE | VA | FUSE SIZE PRI | FUSE SIZE SEC | INTERLOCKS NO | INTERLOCKS NC | PILOT DEVICES: LED 22 mm ** ON LIGHT | PILOT DEVICES: LED 22 mm ** OFF LIGHT | PILOT DEVICES: LED 22 mm ** ADDL P/L | PILOT DEVICES: LED 22 mm ** SS / PB | OTHER UNIT FEATURES | ELEMENTARY # |
|---|---|---|---|---|---|---|---|---|---|---|---|---|---|---|---|---|---|---|
| 1A | MAIN | MAIN SW | | | FU SW 600 | | | | | | | | | | | | 3/0–500KCMIL 3 LUGS/PH, AL MECH LUG AL/CU CABLE, CLASS J FUSE CLIPS | E41428112–001–01 |
| | | | | | | | | | | | | | | | | | | |
| 1U | SPACE | SPACE | | | | | | | | | | | | | | | | |
| 2A | SURGE PROTECTION DEVICE | SPD | 160kA | | SW 30 | | | | | | | | | | | | SOLIDLY GROUNDED, SURGE COUNTER | E41428112–001–02 |
| 2C | P–02–410 | FVNR | NEMA 2 | 20 | FU SW 60 | | CONTROL TRANSFORMER | 100 | .50 | 1.00 | 2 | 1 | RED | | | HOA SS | #14 AWG MTW CONTROL WIRE, 600V SYSTEM, CLASS 10/20 O/L (SELECTABLE), CLASS J FUSE CLIPS, | E41428112–001–03 |
| | | | | | | | | | | | | | | | | | MOTOR LOGIC O/L NEMA SIZE 2, N.C. ISOLATED AUX O/L CONTACTS, STD WIRE LABELS | |
| | | | | | | | | | | | | | | | | | | |
| 2G | P–02–420 | FVNR | NEMA 2 | 20 | FU SW 60 | | CONTROL TRANSFORMER | 100 | .50 | 1.00 | 2 | 1 | RED | | | HOA SS | #14 AWG MTW CONTROL WIRE, 600V SYSTEM, CLASS 10/20 O/L (SELECTABLE), CLASS J FUSE CLIPS, | E41428112–001–03 |
| | | | | | | | | | | | | | | | | | MOTOR LOGIC O/L NEMA SIZE 2, N.C. ISOLATED AUX O/L CONTACTS, STD WIRE LABELS | |
| | | | | | | | | | | | | | | | | | | |
| 2K | P–02–430 | FVNR | NEMA 2 | 20 | FU SW 60 | | CONTROL TRANSFORMER | 100 | .50 | 1.00 | 2 | 1 | RED | | | HOA SS | #14 AWG MTW CONTROL WIRE, 600V SYSTEM, CLASS 10/20 O/L (SELECTABLE), CLASS J FUSE CLIPS, | E41428112–001–03 |
| | | | | | | | | | | | | | | | | | MOTOR LOGIC O/L NEMA SIZE 2, N.C. ISOLATED AUX O/L CONTACTS, STD WIRE LABELS | |
| | | | | | | | | | | | | | | | | | | |
| 2O | SPACE | SPACE | | | | | | | | | | | | | | | | |
| 2S | SPACE | SPACE | | | | | | | | | | | | | | | | |
| 2W | SPACE | SPACE | | | | | | | | | | | | | | | | |
| 3A | SPACE | SPACE | | | | | | | | | | | | | | | | |
| 3E | SPACE | SPACE | | | | | | | | | | | | | | | | |
| 3G | SPACE | SPACE | | | | | | | | | | | | | | | | |
| | | | | | | | | | | | | | | | | | | |
| UNIT LOC | UNIT NAMEPLATES | UNIT TYPE | SIZE | HP | FRAME AMPS | TRIP AMPS | CONTROL SOURCE | VA | PRI | SEC | NO | NC | ON LIGHT | OFF LIGHT | ADDL P/L | SS / PB | OTHER UNIT FEATURES | ELEMENTARY # |
| | | | | | | | | | FUSE SIZE | | INTERLOCKS | | PILOT DEVICES: LED 22 mm ** | | | | | |

| | | | |
|---|---|---|---|
| JOB NAME: | IQALUIT WWTP MCC UPGRADES | EQUIPMENT DESIGNATION: | MCC – 1 |
| JOB LOCATION: | SALABERRY–DE–VALLEYFIELD QC | EQUIPMENT TYPE: | MODEL 6 MOTOR CONTROL CENTER |
| DRAWN BY: | CAD | DRAWING TYPE: | UNIT INFORMATION |
| ENGR: | MLC | | |
| DATE: | MAY 21, 2019 | | |
| DRAWING STATUS: | APPROVAL | DWG# | I41428112–001–01 |

| REV | DESCRIPTION | BY | DATE | | | | | | | | |
|---|---|---|---|---|---|---|---|---|---|---|---|
| B | REAPPROVAL | TA | 06/21/2019 | C | APPROVAL RESUBMITAL | MLC | 07/11/2019 | – | ---- | -- | --/--/-- |
| | | | | A | APPROVAL RESUBMIT | RN | 06/19/2019 | – | ---- | -- | --/--/-- |

| UNIT LOC | UNIT NAMEPLATES | UNIT TYPE | SIZE | HP | FRAME AMPS | TRIP AMPS | CONTROL SOURCE | VA | FUSE SIZE PRI | FUSE SIZE SEC | INTERLOCKS NO | INTERLOCKS NC | PILOT DEVICES: LED 22 mm ** ON LIGHT | PILOT DEVICES: LED 22 mm ** OFF LIGHT | PILOT DEVICES: LED 22 mm ** ADDL P/L | PILOT DEVICES: LED 22 mm ** SS / PB | OTHER UNIT FEATURES | ELEMENTARY # |
|---|---|---|---|---|---|---|---|---|---|---|---|---|---|---|---|---|---|---|
| 3K | P–03–640 | ATV930 | U40 | 5 | FU SW 30 | | CONTROL TRANSFORMER | 100 | .50 | 1.00 | | | RED PTT | | | HOA SS<br>SPD POT | #16 AWG MTW CONTROL WIRE,<br>CLASS J FUSE CLIPS, STD WIRE LABELS | E41428112–001–04 |
| | | | | | | | | | | | | | | | | | | |
| 3S | ASD OUTPUT REACTOR FOR P–03–640 | OUTPUT REACTOR | | | | | | | | | | | | | | | | E41428112–001–04 |
| 3V | SPACE | SPACE | | | | | | | | | | | | | | | | |
| 4A | ASD LINE REACTOR FOR B–102–130 | LINE REACTOR | | | | | | | | | | | | | | | | E41428112–001–05 |
| 4D | B–102–130 | ATV930 | D22 | 25 | FU SW 60 | | CONTROL TRANSFORMER | 300 | 1.25 | 3.20 | | | RED PTT | | | HOA SS<br>SPD POT | #16 AWG MTW CONTROL WIRE,<br>CLASS J FUSE CLIPS, STD WIRE LABELS | E41428112–001–05 |
| | | | | | | | | | | | | | | | | | | |
| 4N | ASD OUTPUT REACTOR FOR B–102–130 | OUTPUT REACTOR | | | | | | | | | | | | | | | | E41428112–001–05 |
| 4Q | SPACE | SPACE | | | | | | | | | | | | | | | | |
| 4U | SPACE | SPACE | | | | | | | | | | | | | | | | |
| 5A | ASD LINE REACTOR FOR B–102–120 | LINE REACTOR | | | | | | | | | | | | | | | | E41428112–001–06 |
| 5D | B–102–120 | ATV930 | D22 | 25 | FU SW 60 | | CONTROL TRANSFORMER | 300 | 1.25 | 3.20 | | | RED PTT | | | HOA SS<br>SPD POT | #16 AWG MTW CONTROL WIRE,<br>CLASS J FUSE CLIPS, STD WIRE LABELS | E41428112–001–06 |
| | | | | | | | | | | | | | | | | | | |
| 5N | ASD OUTPUT REACTOR FOR B–102–120 | OUTPUT REACTOR | | | | | | | | | | | | | | | | E41428112–001–06 |
| 5Q | SPACE | SPACE | | | | | | | | | | | | | | | | |
| 5U | SPACE | SPACE | | | | | | | | | | | | | | | | |
| 6A | ASD LINE REACTOR FOR B–102–110 | LINE REACTOR | | | | | | | | | | | | | | | | E41428112–001–07 |
| 6D | B–102–110 | ATV930 | D22 | 25 | FU SW 60 | | CONTROL TRANSFORMER | 300 | 1.25 | 3.20 | | | RED PTT | | | HOA SS<br>SPD POT | #16 AWG MTW CONTROL WIRE,<br>CLASS J FUSE CLIPS, STD WIRE LABELS | E41428112–001–07 |
| | | | | | | | | | | | | | | | | | | |
| 6N | ASD OUTPUT REACTOR FOR B–102–110 | OUTPUT REACTOR | | | | | | | | | | | | | | | | E41428112–001–07 |
| UNIT LOC | UNIT NAMEPLATES | UNIT TYPE | SIZE | HP | FRAME AMPS | TRIP AMPS | CONTROL SOURCE | VA | PRI | SEC | NO | NC | ON LIGHT | OFF LIGHT | ADDL P/L | SS / PB | OTHER UNIT FEATURES | ELEMENTARY # |
| | | | | | | | | | FUSE SIZE | | INTERLOCKS | | PILOT DEVICES: LED 22 mm ** | | | | | |

| | | | |
|---|---|---|---|
| JOB NAME: | IQALUIT WWTP MCC UPGRADES | EQUIPMENT DESIGNATION: | MCC – 1 |
| JOB LOCATION: | SALABERRY–DE–VALLEYFIELD QC | EQUIPMENT TYPE: | MODEL 6 MOTOR CONTROL CENTER |
| DRAWN BY: | CAD | DRAWING TYPE: | UNIT INFORMATION |
| ENGR: | MLC | | |
| DATE: | MAY 21, 2019 | | |
| DRAWING STATUS: | APPROVAL | DWG# | I41428112–001–01 |

| REV | DESCRIPTION | BY | DATE | | | | | | | |
|---|---|---|---|---|---|---|---|---|---|---|
| B | REAPPROVAL | TA | 06/21/2019 | A | APPROVAL RESUBMIT | RN | 06/19/2019 | – | ---- | -- | --/--/-- |
| | | | | C | APPROVAL RESUBMITAL | MLC | 07/11/2019 | – | ---- | -- | --/--/-- |

| UNIT LOC | UNIT NAMEPLATES | UNIT TYPE | SIZE | HP | FRAME AMPS | TRIP AMPS | CONTROL SOURCE | VA | FUSE SIZE | | INTERLOCKS | | PILOT DEVICES: LED 22 mm ** | | | | OTHER UNIT FEATURES | ELEMENTARY # |
|---|---|---|---|---|---|---|---|---|---|---|---|---|---|---|---|---|---|---|
| | | | | | | | | | PRI | SEC | NO | NC | ON LIGHT | OFF LIGHT | ADDL P/L | SS / PB | | |
| 6Q | SPACE | SPACE | | | | | | | | | | | | | | | | |
| 6U | SPACE | SPACE | | | | | | | | | | | | | | | | |
| 7A | P–02–610 | ATV930 | U22 | 3 | FU SW 30 | | CONTROL TRANSFORMER | 100 | .50 | 1.00 | | | RED PTT | | | HOA SS SPD POT | #16 AWG MTW CONTROL WIRE, CLASS J FUSE CLIPS, STD WIRE LABELS | E41428112–001–08 |
| | | | | | | | | | | | | | | | | | | |
| 7I | ASD OUTPUT REACTOR FOR P–02–610 | OUTPUT REACTOR | | | | | | | | | | | | | | | | E41428112–001–08 |
| 7L | P–02–620 | ATV930 | U22 | 3 | FU SW 30 | | CONTROL TRANSFORMER | 100 | .50 | 1.00 | | | RED PTT | | | HOA SS SPD POT | #16 AWG MTW CONTROL WIRE, CLASS J FUSE CLIPS, STD WIRE LABELS | E41428112–001–09 |
| | | | | | | | | | | | | | | | | | | |
| 7T | ASD OUTPUT REACTOR FOR P–02–620 | OUTPUT REACTOR | | | | | | | | | | | | | | | | E41428112–001–09 |
| 7W | SPACE | SPACE | | | | | | | | | | | | | | | | |
| 8A | P–02–440 | FVNR | NEMA 2 | 20 | FU SW 60 | | CONTROL TRANSFORMER | 100 | .50 | 1.00 | 2 | 1 | RED | | | HOA SS | #14 AWG MTW CONTROL WIRE, 600V SYSTEM, CLASS 10/20 O/L (SELECTABLE), CLASS J FUSE CLIPS, | E41428112–001–03 |
| | | | | | | | | | | | | | | | | | MOTOR LOGIC O/L NEMA SIZE 2, N.C. ISOLATED AUX O/L CONTACTS, STD WIRE LABELS | |
| | | | | | | | | | | | | | | | | | | |
| 8E | P–02–450 | FVNR | NEMA 2 | 20 | FU SW 60 | | CONTROL TRANSFORMER | 100 | .50 | 1.00 | 2 | 1 | RED | | | HOA SS | #14 AWG MTW CONTROL WIRE, 600V SYSTEM, CLASS 10/20 O/L (SELECTABLE), CLASS J FUSE CLIPS, | E41428112–001–03 |
| | | | | | | | | | | | | | | | | | MOTOR LOGIC O/L NEMA SIZE 2, N.C. ISOLATED AUX O/L CONTACTS, STD WIRE LABELS | |
| | | | | | | | | | | | | | | | | | | |
| 8I | P–02–460 | FVNR | NEMA 2 | 20 | FU SW 60 | | CONTROL TRANSFORMER | 100 | .50 | 1.00 | 2 | 1 | RED | | | HOA SS | #14 AWG MTW CONTROL WIRE, 600V SYSTEM, CLASS 10/20 O/L (SELECTABLE), CLASS J FUSE CLIPS, | E41428112–001–03 |
| | | | | | | | | | | | | | | | | | MOTOR LOGIC O/L NEMA SIZE 2, N.C. ISOLATED AUX O/L CONTACTS, STD WIRE LABELS | |
| | | | | | | | | | | | | | | | | | | |
| 8M | SPACE | SPACE | | | | | | | | | | | | | | | | |
| 8Q | SPACE | SPACE | | | | | | | | | | | | | | | | |
| UNIT LOC | UNIT NAMEPLATES | UNIT TYPE | SIZE | HP | FRAME AMPS | TRIP AMPS | CONTROL SOURCE | VA | PRI | SEC | NO | NC | ON LIGHT | OFF LIGHT | ADDL P/L | SS / PB | OTHER UNIT FEATURES | ELEMENTARY # |
| | | | | | | | | | FUSE SIZE | | INTERLOCKS | | PILOT DEVICES: LED 22 mm ** | | | | | |

| | | | |
|---|---|---|---|
| JOB NAME: | IQALUIT WWTP MCC UPGRADES | EQUIPMENT DESIGNATION: | MCC – 1 |
| JOB LOCATION: | SALABERRY–DE–VALLEYFIELD QC | EQUIPMENT TYPE: | MODEL 6 MOTOR CONTROL CENTER |
| DRAWN BY: | CAD | DRAWING TYPE: | UNIT INFORMATION |
| ENGR: | MLC | | |
| DATE: | MAY 21, 2019 | | |
| DRAWING STATUS: | APPROVAL | DWG# | I41428112–001–01 |

| REV | DESCRIPTION | BY | DATE | | | | | | |
|---|---|---|---|---|---|---|---|---|---|
| A | APPROVAL RESUBMIT | RN | 06/19/2019 | – | ---- | -- | --/--/-- | | |
| B | REAPPROVAL | TA | 06/21/2019 | C | APPROVAL RESUBMITAL | MLC | 07/11/2019 | – | ---- | -- | --/--/-- |

| UNIT LOC | UNIT NAMEPLATES | UNIT TYPE | SIZE | HP | FRAME AMPS | TRIP AMPS | CONTROL SOURCE | VA | FUSE SIZE PRI | FUSE SIZE SEC | INTERLOCKS NO | INTERLOCKS NC | PILOT DEVICES: LED 22 mm ** ON LIGHT | PILOT DEVICES: LED 22 mm ** OFF LIGHT | PILOT DEVICES: LED 22 mm ** ADDL P/L | PILOT DEVICES: LED 22 mm ** SS / PB | OTHER UNIT FEATURES | ELEMENTARY # |
|---|---|---|---|---|---|---|---|---|---|---|---|---|---|---|---|---|---|---|
| 8U | SPACE | SPACE | | | | | | | | | | | | | | | | |
| 9A | DDR–02–311 | ATV930 | U22 | 3 | FU SW 30 | | CONTROL TRANSFORMER | 100 | .50 | 1.00 | | | RED PTT | | | HOA SS SPD POT | #16 AWG MTW CONTROL WIRE, CLASS J FUSE CLIPS, STD WIRE LABELS | E41428112–001–10 |
| | | | | | | | | | | | | | | | | | | |
| 9I | ASD OUTPUT REACTOR FOR DDR–02–311 | OUTPUT REACTOR | | | | | | | | | | | | | | | | E41428112–001–10 |
| 9L | DDR–02–321 | ATV930 | U22 | 3 | FU SW 30 | | CONTROL TRANSFORMER | 100 | .50 | 1.00 | | | RED PTT | | | HOA SS SPD POT | #16 AWG MTW CONTROL WIRE, CLASS J FUSE CLIPS, STD WIRE LABELS | E41428112–001–11 |
| | | | | | | | | | | | | | | | | | | |
| 9T | ASD OUTPUT REACTOR FOR DDR–02–321 | OUTPUT REACTOR | | | | | | | | | | | | | | | | E41428112–001–11 |
| 9W | SPACE | SPACE | | | | | | | | | | | | | | | | |
| 10A | SPACE | SPACE | | | | | | | | | | | | | | | | |
| 10C | SPACE | SPACE | | | | | | | | | | | | | | | | |
| 10E | SPACE | SPACE | | | | | | | | | | | | | | | | |
| 10I | P–03–630 | ATV930 | U40 | 5 | FU SW 30 | | CONTROL TRANSFORMER | 100 | .50 | 1.00 | | | RED PTT | | | HOA SS SPD POT | #16 AWG MTW CONTROL WIRE, CLASS J FUSE CLIPS, STD WIRE LABELS | E41428112–001–12 |
| | | | | | | | | | | | | | | | | | | |
| 10Q | ASD OUTPUT REACTOR FOR P–03–630 | OUTPUT REACTOR | | | | | | | | | | | | | | | | E41428112–001–12 |
| 10T | SPACE | SPACE | | | | | | | | | | | | | | | | |
| 11A | SPACE | SPACE | | | | | | | | | | | | | | | | |
| 11C | P–04–770 | 6" BRANCH SW | | | FU SW 30 | | | | | | | | | | | | 14–2AWG 1 LUG/PH, AL MECH LUG AL/CU CABLE, CLASS J FUSE CLIPS | E41428112–001–13 |
| | | | | | | | | | | | | | | | | | | |
| 11E | P–04–780 | 6" BRANCH SW | | | FU SW 30 | | | | | | | | | | | | 14–2AWG 1 LUG/PH, AL MECH LUG AL/CU CABLE, CLASS J FUSE CLIPS | E41428112–001–13 |
| | | | | | | | | | | | | | | | | | | |
| UNIT LOC | UNIT NAMEPLATES | UNIT TYPE | SIZE | HP | FRAME AMPS | TRIP AMPS | CONTROL SOURCE | VA | FUSE SIZE PRI | FUSE SIZE SEC | INTERLOCKS NO | INTERLOCKS NC | PILOT DEVICES: LED 22 mm ** ON LIGHT | PILOT DEVICES: LED 22 mm ** OFF LIGHT | PILOT DEVICES: LED 22 mm ** ADDL P/L | PILOT DEVICES: LED 22 mm ** SS / PB | OTHER UNIT FEATURES | ELEMENTARY # |

| | | | |
|---|---|---|---|
| JOB NAME: | IQALUIT WWTP MCC UPGRADES | EQUIPMENT DESIGNATION: | MCC – 1 |
| JOB LOCATION: | SALABERRY–DE–VALLEYFIELD QC | EQUIPMENT TYPE: | MODEL 6 MOTOR CONTROL CENTER |
| DRAWN BY: | CAD | DRAWING TYPE: | UNIT INFORMATION |
| ENGR: | MLC | | |
| DATE: | MAY 21, 2019 | | |
| DRAWING STATUS: | APPROVAL | DWG# | I41428112–001–01 |

| REV | DESCRIPTION | BY | DATE | | | | | | | |
|---|---|---|---|---|---|---|---|---|---|---|
| B | REAPPROVAL | TA | 06/21/2019 | C | APPROVAL RESUBMITAL | MLC | 07/11/2019 | – | ---- | -- | --/--/-- |
| | | | | A | APPROVAL RESUBMIT | RN | 06/19/2019 | – | ---- | -- | --/--/-- |

| UNIT LOC | UNIT NAMEPLATES | UNIT TYPE | SIZE | HP | FRAME AMPS | TRIP AMPS | CONTROL SOURCE | VA | FUSE SIZE PRI | FUSE SIZE SEC | INTERLOCKS NO | INTERLOCKS NC | PILOT DEVICES: LED 22 mm ** ON LIGHT | PILOT DEVICES: LED 22 mm ** OFF LIGHT | PILOT DEVICES: LED 22 mm ** ADDL P/L | PILOT DEVICES: LED 22 mm ** SS / PB | OTHER UNIT FEATURES | ELEMENTARY # |
|---|---|---|---|---|---|---|---|---|---|---|---|---|---|---|---|---|---|---|
| 11G | P-04-790 | 6" BRANCH SW | | | FU SW 30 | | | | | | | | | | | | 14-2AWG 1 LUG/PH, AL MECH LUG AL/CU CABLE, CLASS J FUSE CLIPS | E41428112-001-13 |
| | | | | | | | | | | | | | | | | | | |
| 11I | SPACE | SPACE | | | | | | | | | | | | | | | | |
| 11M | SPACE | SPACE | | | | | | | | | | | | | | | | |
| 11Q | SPACE | SPACE | | | | | | | | | | | | | | | | |
| 11U | SPACE | SPACE | | | | | | | | | | | | | | | | |
| 12A | SPACE | SPACE | | | | | | | | | | | | | | | | |
| 12E | P-04-970 | 6" BRANCH SW | | | FU SW 30 | | | | | | | | | | | | 14-2AWG 1 LUG/PH, AL MECH LUG AL/CU CABLE, CLASS J FUSE CLIPS | E41428112-001-13 |
| | | | | | | | | | | | | | | | | | | |
| 12G | P-04-980 | 6" BRANCH SW | | | FU SW 30 | | | | | | | | | | | | 14-2AWG 1 LUG/PH, AL MECH LUG AL/CU CABLE, CLASS J FUSE CLIPS | E41428112-001-13 |
| | | | | | | | | | | | | | | | | | | |
| 12I | SPACE | SPACE | | | | | | | | | | | | | | | | |
| 12M | SPACE | SPACE | | | | | | | | | | | | | | | | |
| 12Q | SPACE | SPACE | | | | | | | | | | | | | | | | |
| 12U | SPACE | SPACE | | | | | | | | | | | | | | | | |
| | | | | | | | | | | | | | | | | | | |
| | | | | | | | | | | | | | | | | | | |
| | | | | | | | | | | | | | | | | | | |
| | | | | | | | | | | | | | | | | | | |
| | | | | | | | | | | | | | | | | | | |
| UNIT LOC | UNIT NAMEPLATES | UNIT TYPE | SIZE | HP | FRAME AMPS | TRIP AMPS | CONTROL SOURCE | VA | PRI | SEC | NO | NC | ON LIGHT | OFF LIGHT | ADDL P/L | SS / PB | OTHER UNIT FEATURES | ELEMENTARY # |
| | | | | | | | | | FUSE SIZE | | INTERLOCKS | | PILOT DEVICES: LED 22 mm ** | | | | | |

| | |
|---|---|
| JOB NAME: | IQALUIT WWTP MCC UPGRADES |
| JOB LOCATION: | SALABERRY-DE-VALLEYFIELD QC |
| DRAWN BY: | CAD |
| ENGR: | MLC |
| DATE: | MAY 21, 2019 |
| DRAWING STATUS: | APPROVAL |

| | |
|---|---|
| EQUIPMENT DESIGNATION: | MCC – 1 |
| EQUIPMENT TYPE: | MODEL 6 MOTOR CONTROL CENTER |
| DRAWING TYPE: | UNIT INFORMATION |
| DWG# | I41428112-001-01 |

| REV | DESCRIPTION | BY | DATE | B | REAPPROVAL | TA | 06/21/2019 |
|---|---|---|---|---|---|---|---|
| A | APPROVAL RESUBMIT | RN | 06/19/2019 | C | APPROVAL RESUBMITAL | MLC | 07/11/2019 |

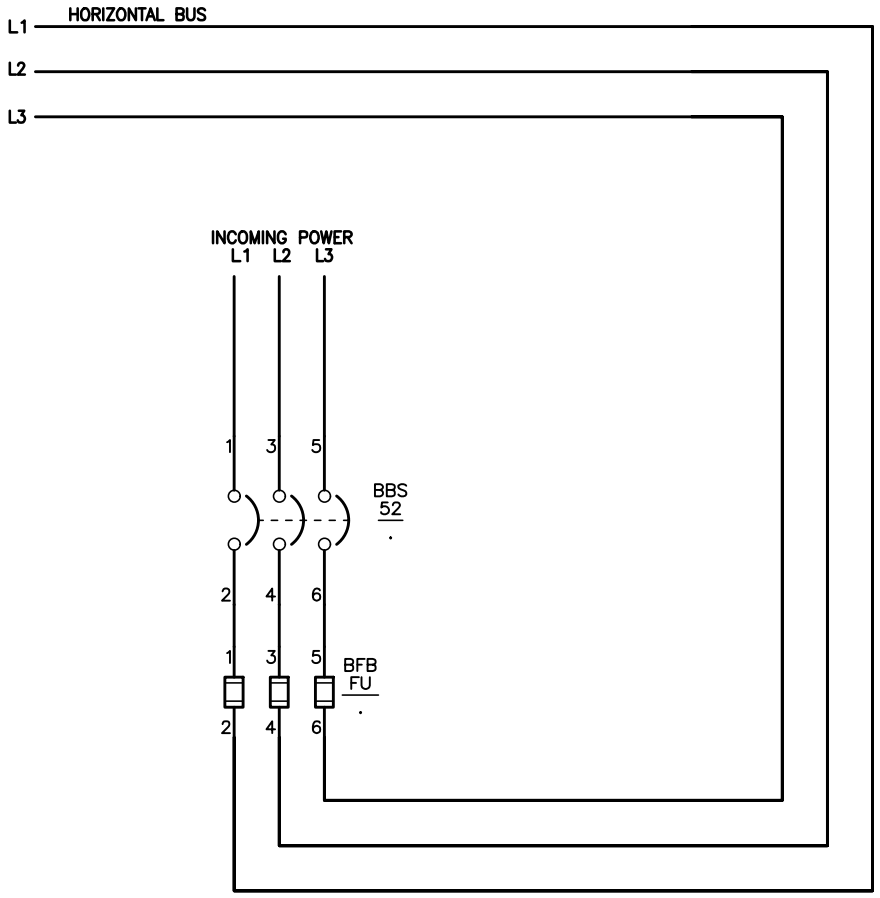


POWER FUSES NOT INCLUDED

| | | | |
|---|---|---|---|
| JOB NAME: | IQALUIT WWTP MCC UPGRADES | EQUIPMENT DESIGNATION: | MCC – 1 |
| JOB LOCATION: | SALABERRY–DE–VALLEYFIELD QC | EQUIPMENT TYPE: | MODEL 6 MOTOR CONTROL CENTER |
| DRAWN BY: | CAD | DRAWING TYPE: | ELEMENTARY |
| ENGR: | MLC | | SQUARE D by Schneider Electric |
| DATE: | MAY 21, 2019 | | |
| DRAWING STATUS: | APPROVAL | DWG# E41428112-001-01 | PG 1 OF 1 REV C |

| REV | DESCRIPTION | BY | DATE | B | REAPPROVAL | TA | 06/21/2019 |
|---|---|---|---|---|---|---|---|
| A | APPROVAL RESUBMIT | RN | 06/19/2019 | C | APPROVAL RESUBMITAL | MLC | 07/11/2019 |

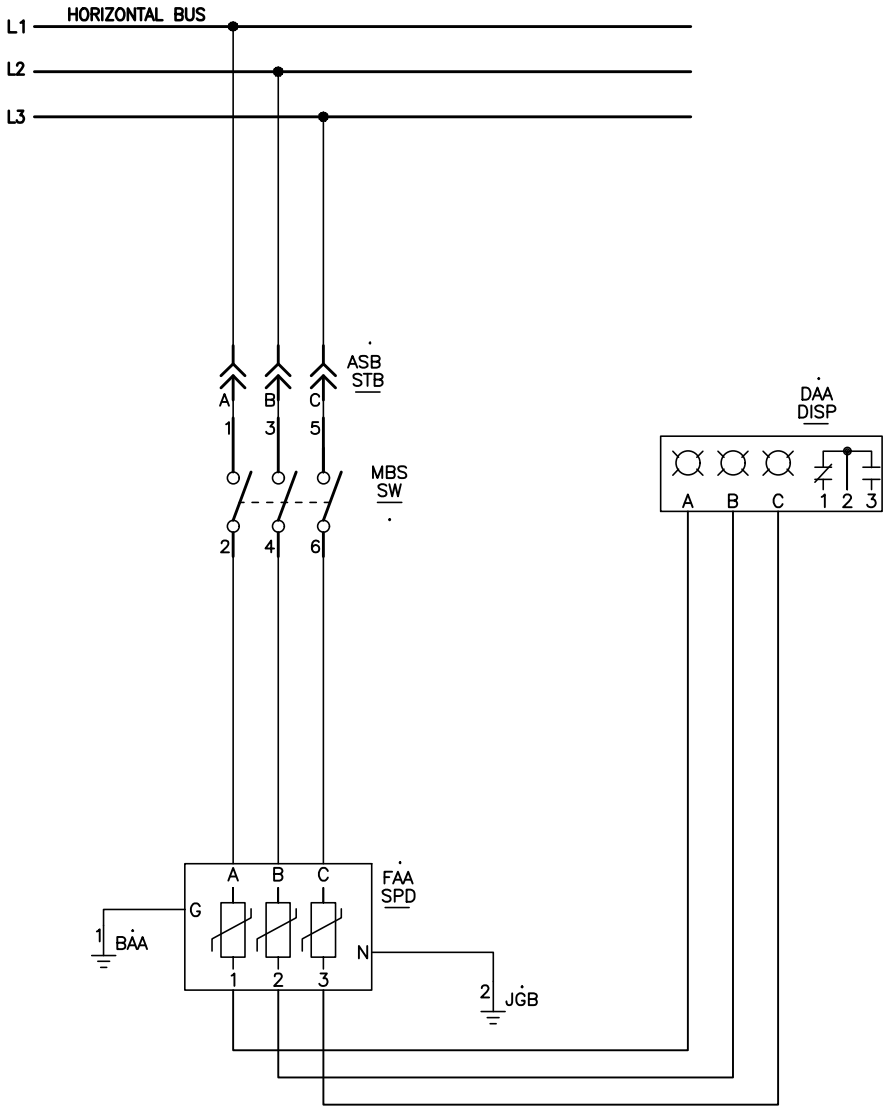


| | | | |
|---|---|---|---|
| JOB NAME: | IQALUIT WWTP MCC UPGRADES | EQUIPMENT DESIGNATION: | MCC – 1 |
| JOB LOCATION: | SALABERRY-DE-VALLEYFIELD QC | EQUIPMENT TYPE: | MODEL 6 MOTOR CONTROL CENTER |
| DRAWN BY: | CAD | DRAWING TYPE: | ELEMENTARY |
| ENGR: | MLC | | SQUARE D by Schneider Electric |
| DATE: | MAY 21, 2019 | | |
| DRAWING STATUS: | APPROVAL | DWG# E41428112-001-02 | PG 1 OF 1 REV C |

| REV | DESCRIPTION | BY | DATE | B | REAPPROVAL | TA | 06/21/2019 |
|---|---|---|---|---|---|---|---|
| A | APPROVAL RESUBMIT | RN | 06/19/2019 | C | APPROVAL RESUBMITAL | MLC | 07/11/2019 |

14M

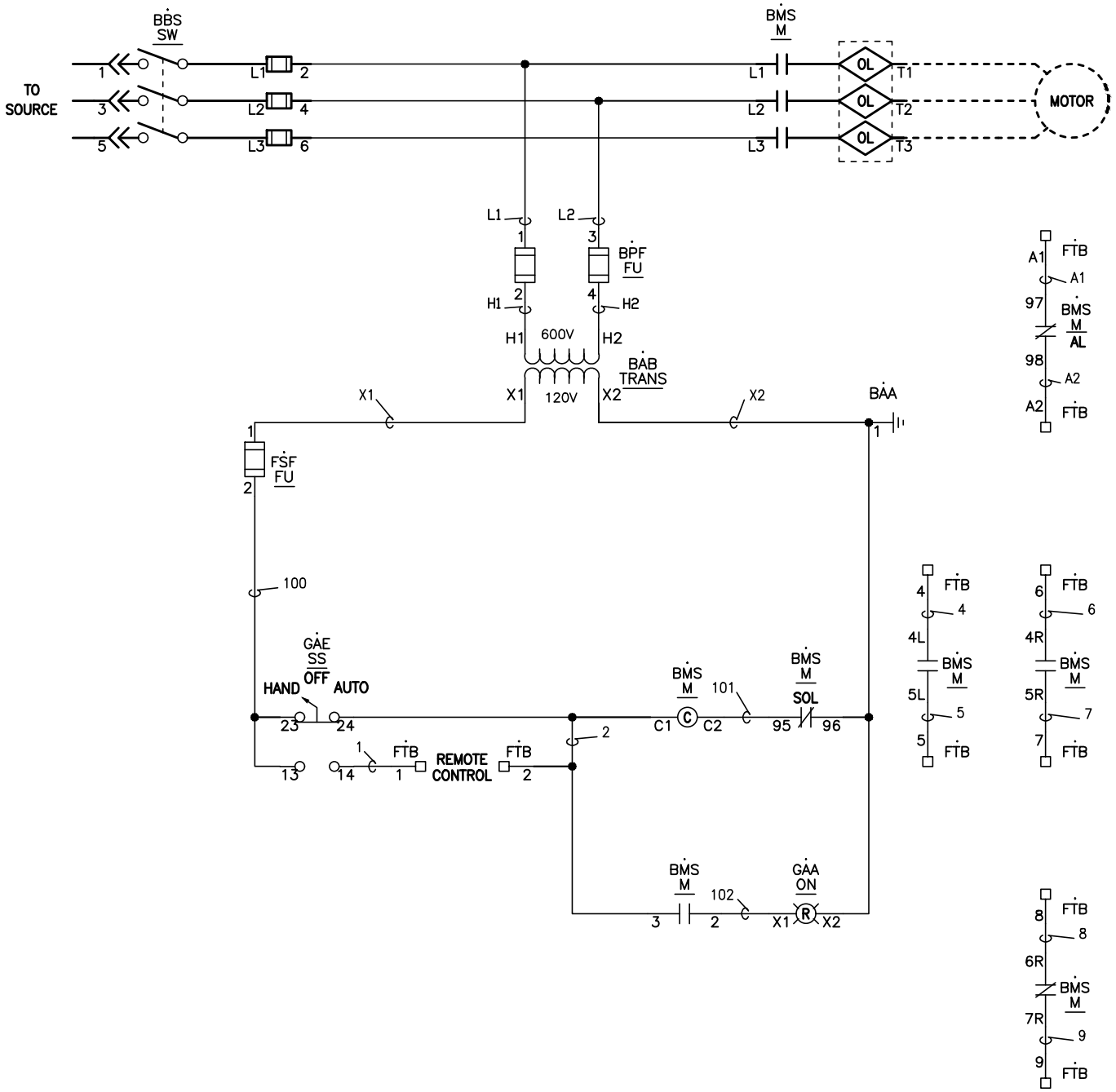


POWER FUSE NOT INCLUDED

HEAT SHRINK WIRE LABELS

| | | | |
|---|---|---|---|
| JOB NAME: | IQALUIT WWTP MCC UPGRADES | EQUIPMENT DESIGNATION: | MCC – 1 |
| JOB LOCATION: | SALABERRY-DE-VALLEYFIELD QC | EQUIPMENT TYPE: | MODEL 6 MOTOR CONTROL CENTER |
| DRAWN BY: | CAD | DRAWING TYPE: | ELEMENTARY |
| ENGR: | MLC | | |
| DATE: | MAY 21, 2019 | | |
| DRAWING STATUS: | APPROVAL | DWG# E41428112-001-03 | PG 1 OF 1 REV C |

| REV | DESCRIPTION | BY | DATE | | | | | | | | |
|---|---|---|---|---|---|---|---|---|---|---|---|
| A | APPROVAL RESUBMIT | RN | 06/19/2019 | B | REAPPROVAL | TA | 06/21/2019 | – | ---- | -- | --/--/-- |
| | | | | C | APPROVAL RESUBMITAL | MLC | 07/11/2019 | – | ---- | -- | --/--/-- |

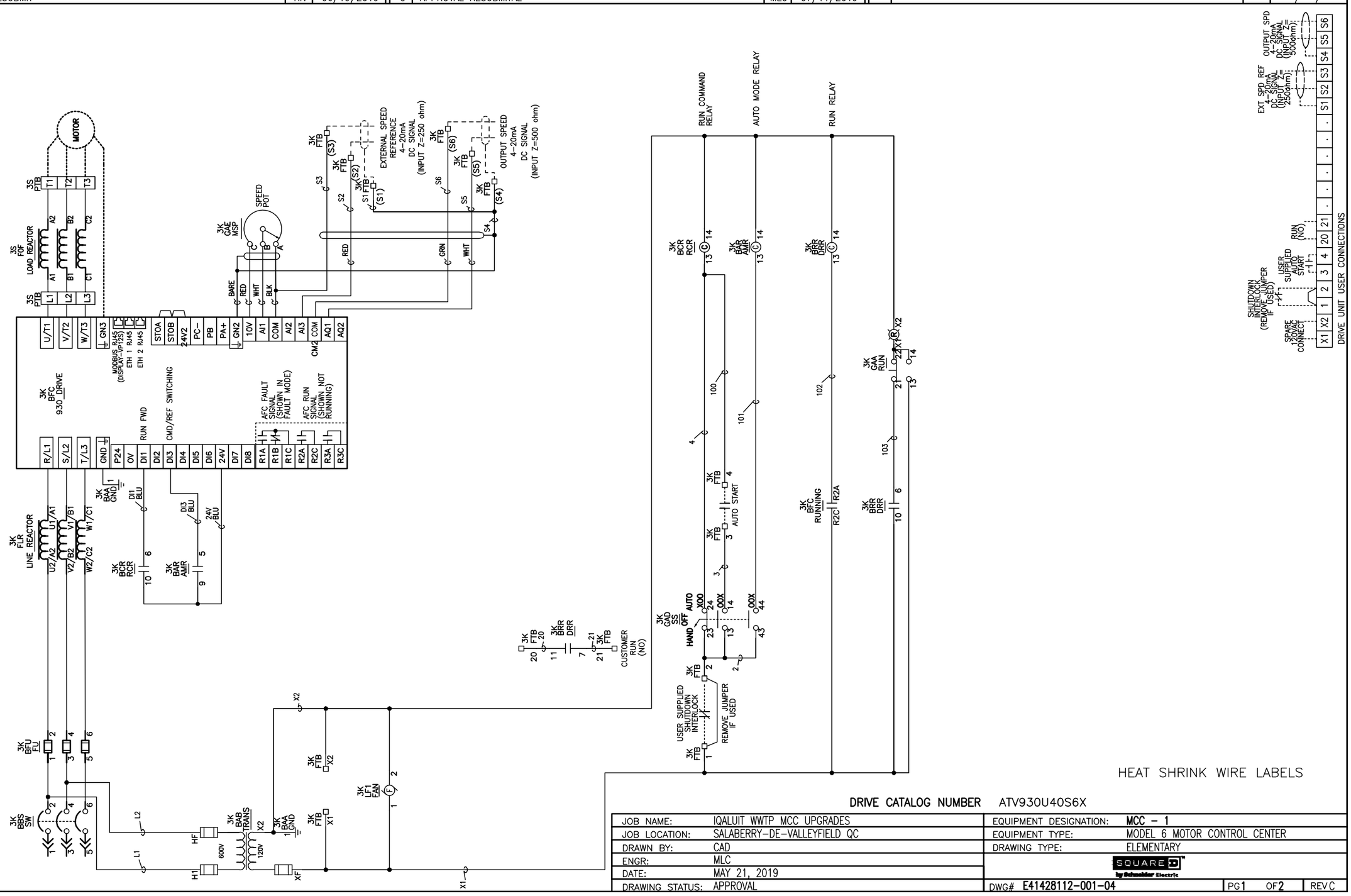


**DRIVE CATALOG NUMBER** ATV930U40S6X

| | | | |
|---|---|---|---|
| JOB NAME: | IQALUIT WWTP MCC UPGRADES | EQUIPMENT DESIGNATION: | MCC – 1 |
| JOB LOCATION: | SALABERRY-DE-VALLEYFIELD QC | EQUIPMENT TYPE: | MODEL 6 MOTOR CONTROL CENTER |
| DRAWN BY: | CAD | DRAWING TYPE: | ELEMENTARY |
| ENGR: | MLC | | SQUARE D by Schneider Electric |
| DATE: | MAY 21, 2019 | | |
| DRAWING STATUS: | APPROVAL | DWG# E41428112-001-04 | PG1 OF2 REVC |

| REV | DESCRIPTION | BY | DATE | B | REAPPROVAL | TA | 06/21/2019 |
|---|---|---|---|---|---|---|---|
| A | APPROVAL RESUBMIT | RN | 06/19/2019 | C | APPROVAL RESUBMITAL | MLC | 07/11/2019 |

| ATV930 FACTORY CONFIGURATION – NORMAL DUTY – VARIATIONS FROM DEFAULT HOA | | | | | | |
|---|---|---|---|---|---|---|
| MENU | TAB | SUB–MENU | DESCRIPTION | SETTING | CODE | ADJ. |
| 1 | S.START | –––– | 2/3 WIRE CONTROL | 2C | TCC | 2C |
| 1 | S.START | –––– | BASIC FREQUENCY | 60Hz NEMA | BFR | 60 |
| 1 | S.START | –––– | MAX FREQUENCY | 60 | TFR | 60 |
| 1 | S.START | –––– | LOW SPEED | 3 | LSP | 3 |
| 1 | S.START | –––– | ACCELERATION | 10 | ACC | 10 |
| 1 | S.START | –––– | DECELERATION | 10 | DEC | 10 |
| 5.2 | ––– | SWITCHING FREQUENCY | SWITCHING FREQUENCY | 2.5 | SFR | 2.5 |
| 5.4 | ––– | –––– | REF FREQ 1 CONFIG | AI1 | FR1 | AI1 |
| 5.4 | ––– | –––– | FREQ SWITCH ASSIGN | DI3 | RFC | DI3 |
| 5.4 | ––– | –––– | 2–WIRE TYPE | LEVEL | TCT | LEL |
| 5.4 | ––– | –––– | REF FREQ 2 CONFIG | AI3 | FR2 | AI3 |
| 5.4 | ––– | CONTROL MODE | CONTROL MODE | CONTROL MODE I/O PROFILE | CHCF | IO |
| 5.4 | ––– | COMMAND SWITCHING | COMMAND SWITCHING | DI3 | CCS | DI3 |
| 5.4 | ––– | CMD CHANNEL 1 | CMD CHANNEL 1 | TERMINAL | CD1 | TER |
| 5.4 | ––– | CMD CHANNEL 2 | CMD CHANNEL 2 | TERMINAL | CD2 | TER |
| 5.14 | AI/AQ | AI3 CONFIGURATION | AI3 MIN VALUE | 4 | CLR3 | 4 |
| 5.14 | AI/AQ | AQ1 CONFIGURATION | AQ1 ASSIGNMENT | MOTOR FREQUENCY | AO1 | OFR |
| 5.14 | AI/AQ | AQ1 TYPE | AQ1 MIN OUTPUT | CURRENT | AO1T | 0A |
| 5.14 | AI/AQ | AQ1 CONFIGURATION | AQ1 MIN OUTPUT | 4 | AOL1 | 4 |
| 5.14 | RELAY | R1 CONFIGURATION | R1 ASSIGNMENT | OPERATING STATE | R1 | FLT |
| 5.14 | RELAY | R2 CONFIGURATION | R2 ASSIGNMENT | DRIVE RUNNING | R2 | RUN |
| 5.16 | ––– | CATCH ON THE FLY | CATCH ON THE FLY | YES | FLR | YES |

| | | | |
|---|---|---|---|
| JOB NAME: | IQALUIT WWTP MCC UPGRADES | EQUIPMENT DESIGNATION: | MCC – 1 |
| JOB LOCATION: | SALABERRY–DE–VALLEYFIELD QC | EQUIPMENT TYPE: | MODEL 6 MOTOR CONTROL CENTER |
| DRAWN BY: | CAD | DRAWING TYPE: | ELEMENTARY |
| ENGR: | MLC | | SQUARE D by Schneider Electric |
| DATE: | MAY 21, 2019 | | |
| DRAWING STATUS: | APPROVAL | DWG# E41428112–001–04 | PG 2 OF 2 REV C |

| REV | DESCRIPTION | BY | DATE | | | | | | | | |
|---|---|---|---|---|---|---|---|---|---|---|---|
| A | APPROVAL RESUBMIT | RN | 06/19/2019 | B | REAPPROVAL | TA | 06/21/2019 | – | ---- | -- | --/--/-- |
| | | | | C | APPROVAL RESUBMITAL | MLC | 07/11/2019 | – | ---- | -- | --/--/-- |

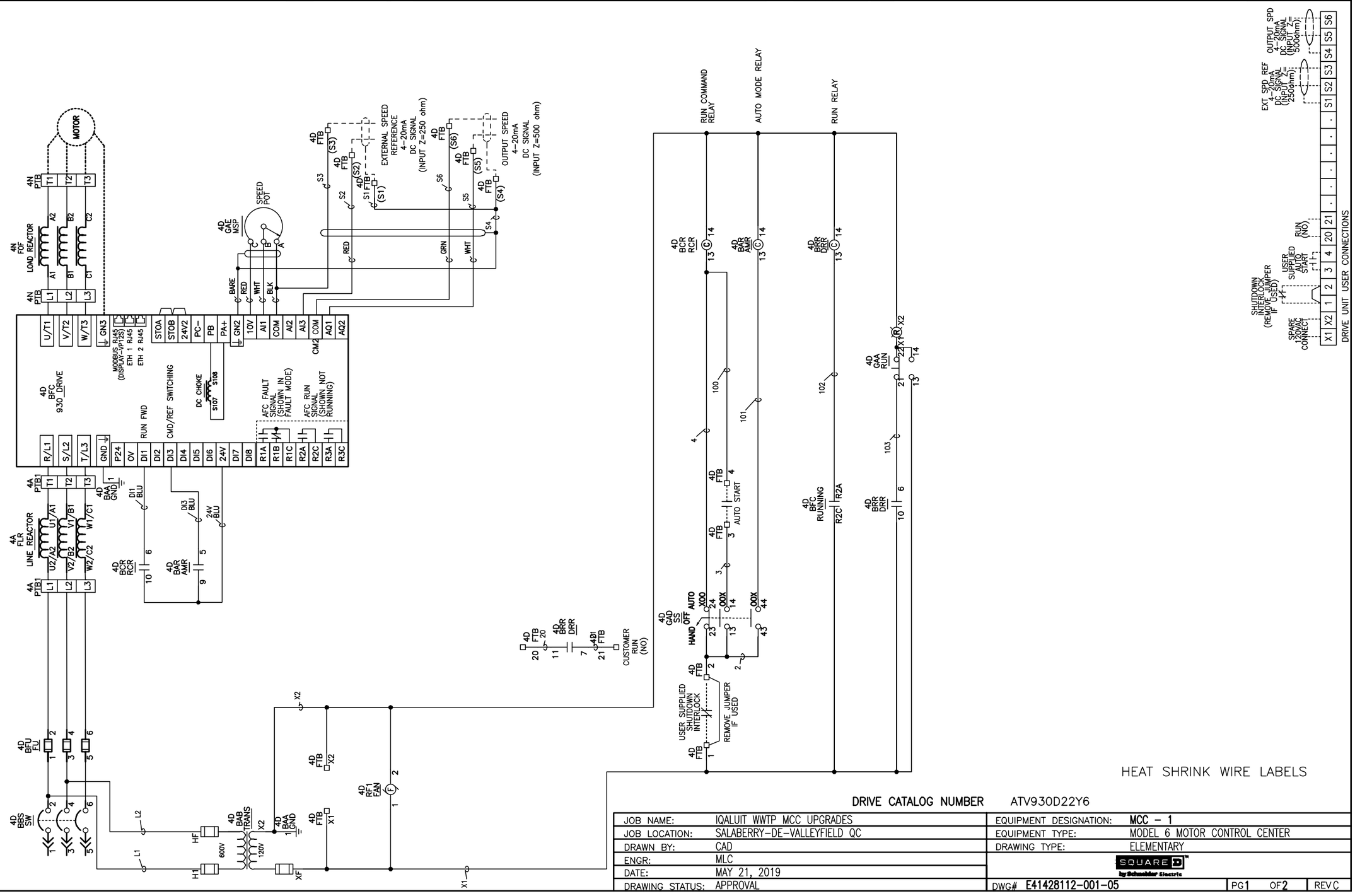


**DRIVE CATALOG NUMBER** ATV930D22Y6

| | | | |
|---|---|---|---|
| JOB NAME: | IQALUIT WWTP MCC UPGRADES | EQUIPMENT DESIGNATION: | MCC – 1 |
| JOB LOCATION: | SALABERRY-DE-VALLEYFIELD QC | EQUIPMENT TYPE: | MODEL 6 MOTOR CONTROL CENTER |
| DRAWN BY: | CAD | DRAWING TYPE: | ELEMENTARY |
| ENGR: | MLC | | |
| DATE: | MAY 21, 2019 | | |
| DRAWING STATUS: | APPROVAL | DWG# E41428112-001-05 | PG1 OF2 REVC |

| REV | DESCRIPTION | BY | DATE | B | REAPPROVAL | TA | 06/21/2019 |
|---|---|---|---|---|---|---|---|
| A | APPROVAL RESUBMIT | RN | 06/19/2019 | C | APPROVAL RESUBMITAL | MLC | 07/11/2019 |

| ATV930 FACTORY CONFIGURATION – NORMAL DUTY – VARIATIONS FROM DEFAULT HOA | | | | | | |
|---|---|---|---|---|---|---|
| MENU | TAB | SUB–MENU | DESCRIPTION | SETTING | CODE | ADJ. |
| 1 | S.START | –––– | 2/3 WIRE CONTROL | 2C | TCC | 2C |
| 1 | S.START | –––– | BASIC FREQUENCY | 60Hz NEMA | BFR | 60 |
| 1 | S.START | –––– | MAX FREQUENCY | 60 | TFR | 60 |
| 1 | S.START | –––– | LOW SPEED | 3 | LSP | 3 |
| 1 | S.START | –––– | ACCELERATION | 10 | ACC | 10 |
| 1 | S.START | –––– | DECELERATION | 10 | DEC | 10 |
| 5.2 | ––– | SWITCHING FREQUENCY | SWITCHING FREQUENCY | 2.5 | SFR | 2.5 |
| 5.4 | ––– | –––– | REF FREQ 1 CONFIG | AI1 | FR1 | AI1 |
| 5.4 | ––– | –––– | FREQ SWITCH ASSIGN | DI3 | RFC | DI3 |
| 5.4 | ––– | –––– | 2–WIRE TYPE | LEVEL | TCT | LEL |
| 5.4 | ––– | –––– | REF FREQ 2 CONFIG | AI3 | FR2 | AI3 |
| 5.4 | ––– | CONTROL MODE | CONTROL MODE | CONTROL MODE I/O PROFILE | CHCF | IO |
| 5.4 | ––– | COMMAND SWITCHING | COMMAND SWITCHING | DI3 | CCS | DI3 |
| 5.4 | ––– | CMD CHANNEL 1 | CMD CHANNEL 1 | TERMINAL | CD1 | TER |
| 5.4 | ––– | CMD CHANNEL 2 | CMD CHANNEL 2 | TERMINAL | CD2 | TER |
| 5.14 | AI/AQ | AI3 CONFIGURATION | AI3 MIN VALUE | 4 | CLR3 | 4 |
| 5.14 | AI/AQ | AQ1 CONFIGURATION | AQ1 ASSIGNMENT | MOTOR FREQUENCY | AO1 | OFR |
| 5.14 | AI/AQ | AQ1 TYPE | AQ1 MIN OUTPUT | CURRENT | AO1T | 0A |
| 5.14 | AI/AQ | AQ1 CONFIGURATION | AQ1 MIN OUTPUT | 4 | AOL1 | 4 |
| 5.14 | RELAY | R1 CONFIGURATION | R1 ASSIGNMENT | OPERATING STATE | R1 | FLT |
| 5.14 | RELAY | R2 CONFIGURATION | R2 ASSIGNMENT | DRIVE RUNNING | R2 | RUN |
| 5.16 | ––– | CATCH ON THE FLY | CATCH ON THE FLY | YES | FLR | YES |

| | | | |
|---|---|---|---|
| JOB NAME: | IQALUIT WWTP MCC UPGRADES | EQUIPMENT DESIGNATION: | MCC – 1 |
| JOB LOCATION: | SALABERRY–DE–VALLEYFIELD QC | EQUIPMENT TYPE: | MODEL 6 MOTOR CONTROL CENTER |
| DRAWN BY: | CAD | DRAWING TYPE: | ELEMENTARY |
| ENGR: | MLC | | SQUARE D by Schneider Electric |
| DATE: | MAY 21, 2019 | | |
| DRAWING STATUS: | APPROVAL | DWG# E41428112–001–05 | PG 2 OF 2 REV C |

| REV | DESCRIPTION | BY | DATE | | | | | | | |
|---|---|---|---|---|---|---|---|---|---|---|
| A | APPROVAL RESUBMIT | RN | 06/19/2019 | B | REAPPROVAL | TA | 06/21/2019 | – | ---- | -- | --/--/-- |
| | | | | C | APPROVAL RESUBMITAL | MLC | 07/11/2019 | – | ---- | -- | --/--/-- |

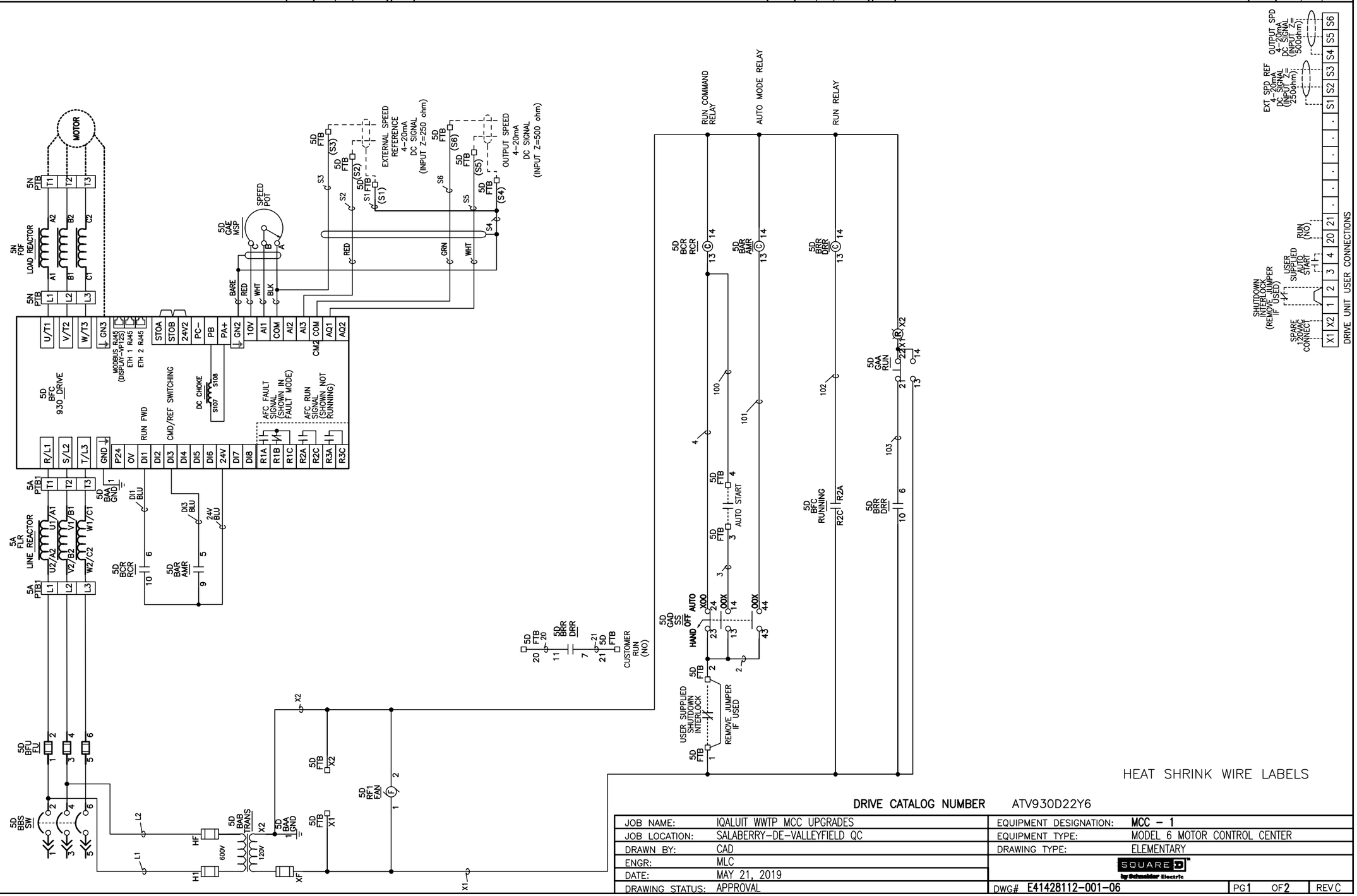


**DRIVE CATALOG NUMBER** ATV930D22Y6

| | | | |
|---|---|---|---|
| JOB NAME: | IQALUIT WWTP MCC UPGRADES | EQUIPMENT DESIGNATION: | MCC – 1 |
| JOB LOCATION: | SALABERRY-DE-VALLEYFIELD QC | EQUIPMENT TYPE: | MODEL 6 MOTOR CONTROL CENTER |
| DRAWN BY: | CAD | DRAWING TYPE: | ELEMENTARY |
| ENGR: | MLC | | SQUARE D by Schneider Electric |
| DATE: | MAY 21, 2019 | | |
| DRAWING STATUS: | APPROVAL | DWG# E41428112-001-06 | PG1 OF2 REVC |

| REV | DESCRIPTION | BY | DATE | B | REAPPROVAL | TA | 06/21/2019 |
|---|---|---|---|---|---|---|---|
| A | APPROVAL RESUBMIT | RN | 06/19/2019 | C | APPROVAL RESUBMITAL | MLC | 07/11/2019 |

| ATV930 FACTORY CONFIGURATION – NORMAL DUTY – VARIATIONS FROM DEFAULT HOA | | | | | | |
|---|---|---|---|---|---|---|
| MENU | TAB | SUB–MENU | DESCRIPTION | SETTING | CODE | ADJ. |
| 1 | S.START | –––– | 2/3 WIRE CONTROL | 2C | TCC | 2C |
| 1 | S.START | –––– | BASIC FREQUENCY | 60Hz NEMA | BFR | 60 |
| 1 | S.START | –––– | MAX FREQUENCY | 60 | TFR | 60 |
| 1 | S.START | –––– | LOW SPEED | 3 | LSP | 3 |
| 1 | S.START | –––– | ACCELERATION | 10 | ACC | 10 |
| 1 | S.START | –––– | DECELERATION | 10 | DEC | 10 |
| 5.2 | ––– | SWITCHING FREQUENCY | SWITCHING FREQUENCY | 2.5 | SFR | 2.5 |
| 5.4 | ––– | –––– | REF FREQ 1 CONFIG | AI1 | FR1 | AI1 |
| 5.4 | ––– | –––– | FREQ SWITCH ASSIGN | DI3 | RFC | DI3 |
| 5.4 | ––– | –––– | 2–WIRE TYPE | LEVEL | TCT | LEL |
| 5.4 | ––– | –––– | REF FREQ 2 CONFIG | AI3 | FR2 | AI3 |
| 5.4 | ––– | CONTROL MODE | CONTROL MODE | CONTROL MODE I/O PROFILE | CHCF | IO |
| 5.4 | ––– | COMMAND SWITCHING | COMMAND SWITCHING | DI3 | CCS | DI3 |
| 5.4 | ––– | CMD CHANNEL 1 | CMD CHANNEL 1 | TERMINAL | CD1 | TER |
| 5.4 | ––– | CMD CHANNEL 2 | CMD CHANNEL 2 | TERMINAL | CD2 | TER |
| 5.14 | AI/AQ | AI3 CONFIGURATION | AI3 MIN VALUE | 4 | CLR3 | 4 |
| 5.14 | AI/AQ | AQ1 CONFIGURATION | AQ1 ASSIGNMENT | MOTOR FREQUENCY | AO1 | OFR |
| 5.14 | AI/AQ | AQ1 TYPE | AQ1 MIN OUTPUT | CURRENT | AO1T | 0A |
| 5.14 | AI/AQ | AQ1 CONFIGURATION | AQ1 MIN OUTPUT | 4 | AOL1 | 4 |
| 5.14 | RELAY | R1 CONFIGURATION | R1 ASSIGNMENT | OPERATING STATE | R1 | FLT |
| 5.14 | RELAY | R2 CONFIGURATION | R2 ASSIGNMENT | DRIVE RUNNING | R2 | RUN |
| 5.16 | ––– | CATCH ON THE FLY | CATCH ON THE FLY | YES | FLR | YES |

| | | | |
|---|---|---|---|
| JOB NAME: | IQALUIT WWTP MCC UPGRADES | EQUIPMENT DESIGNATION: | MCC – 1 |
| JOB LOCATION: | SALABERRY–DE–VALLEYFIELD QC | EQUIPMENT TYPE: | MODEL 6 MOTOR CONTROL CENTER |
| DRAWN BY: | CAD | DRAWING TYPE: | ELEMENTARY |
| ENGR: | MLC | | SQUARE D by Schneider Electric |
| DATE: | MAY 21, 2019 | | |
| DRAWING STATUS: | APPROVAL | DWG# E41428112–001–06 | PG 2 OF 2 REV C |

| REV | DESCRIPTION | BY | DATE | | | | | | | |
|---|---|---|---|---|---|---|---|---|---|---|
| A | APPROVAL RESUBMIT | RN | 06/19/2019 | B | REAPPROVAL | TA | 06/21/2019 | – | ---- | -- | --/--/-- |
| | | | | C | APPROVAL RESUBMITAL | MLC | 07/11/2019 | – | ---- | -- | --/--/-- |

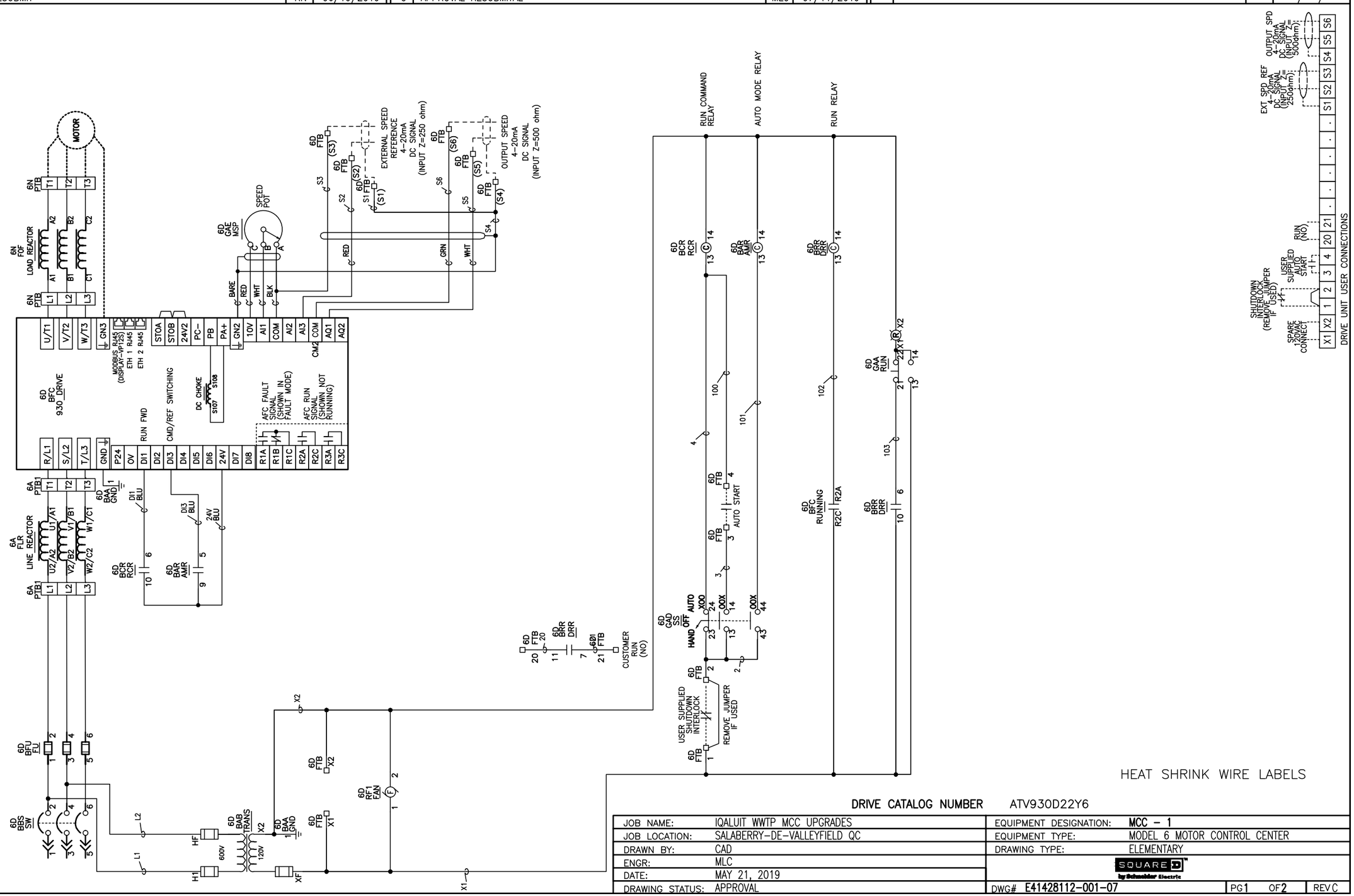


**DRIVE CATALOG NUMBER** ATV930D22Y6

| | | | |
|---|---|---|---|
| JOB NAME: | IQALUIT WWTP MCC UPGRADES | EQUIPMENT DESIGNATION: | MCC – 1 |
| JOB LOCATION: | SALABERRY-DE-VALLEYFIELD QC | EQUIPMENT TYPE: | MODEL 6 MOTOR CONTROL CENTER |
| DRAWN BY: | CAD | DRAWING TYPE: | ELEMENTARY |
| ENGR: | MLC | | SQUARE D by Schneider Electric |
| DATE: | MAY 21, 2019 | | |
| DRAWING STATUS: | APPROVAL | DWG# E41428112-001-07 | PG 1 OF 2 REV C |

| REV | DESCRIPTION | BY | DATE | B | REAPPROVAL | TA | 06/21/2019 |
|---|---|---|---|---|---|---|---|
| A | APPROVAL RESUBMIT | RN | 06/19/2019 | C | APPROVAL RESUBMITAL | MLC | 07/11/2019 |

| ATV930 FACTORY CONFIGURATION – NORMAL DUTY – VARIATIONS FROM DEFAULT HOA | | | | | | |
|---|---|---|---|---|---|---|
| MENU | TAB | SUB–MENU | DESCRIPTION | SETTING | CODE | ADJ. |
| 1 | S.START | –––– | 2/3 WIRE CONTROL | 2C | TCC | 2C |
| 1 | S.START | –––– | BASIC FREQUENCY | 60Hz NEMA | BFR | 60 |
| 1 | S.START | –––– | MAX FREQUENCY | 60 | TFR | 60 |
| 1 | S.START | –––– | LOW SPEED | 3 | LSP | 3 |
| 1 | S.START | –––– | ACCELERATION | 10 | ACC | 10 |
| 1 | S.START | –––– | DECELERATION | 10 | DEC | 10 |
| 5.2 | ––– | SWITCHING FREQUENCY | SWITCHING FREQUENCY | 2.5 | SFR | 2.5 |
| 5.4 | ––– | –––– | REF FREQ 1 CONFIG | AI1 | FR1 | AI1 |
| 5.4 | ––– | –––– | FREQ SWITCH ASSIGN | DI3 | RFC | DI3 |
| 5.4 | ––– | –––– | 2–WIRE TYPE | LEVEL | TCT | LEL |
| 5.4 | ––– | –––– | REF FREQ 2 CONFIG | AI3 | FR2 | AI3 |
| 5.4 | ––– | CONTROL MODE | CONTROL MODE | CONTROL MODE I/O PROFILE | CHCF | IO |
| 5.4 | ––– | COMMAND SWITCHING | COMMAND SWITCHING | DI3 | CCS | DI3 |
| 5.4 | ––– | CMD CHANNEL 1 | CMD CHANNEL 1 | TERMINAL | CD1 | TER |
| 5.4 | ––– | CMD CHANNEL 2 | CMD CHANNEL 2 | TERMINAL | CD2 | TER |
| 5.14 | AI/AQ | AI3 CONFIGURATION | AI3 MIN VALUE | 4 | CLR3 | 4 |
| 5.14 | AI/AQ | AQ1 CONFIGURATION | AQ1 ASSIGNMENT | MOTOR FREQUENCY | AO1 | OFR |
| 5.14 | AI/AQ | AQ1 TYPE | AQ1 MIN OUTPUT | CURRENT | AO1T | 0A |
| 5.14 | AI/AQ | AQ1 CONFIGURATION | AQ1 MIN OUTPUT | 4 | AOL1 | 4 |
| 5.14 | RELAY | R1 CONFIGURATION | R1 ASSIGNMENT | OPERATING STATE | R1 | FLT |
| 5.14 | RELAY | R2 CONFIGURATION | R2 ASSIGNMENT | DRIVE RUNNING | R2 | RUN |
| 5.16 | ––– | CATCH ON THE FLY | CATCH ON THE FLY | YES | FLR | YES |

| | | | |
|---|---|---|---|
| JOB NAME: | IQALUIT WWTP MCC UPGRADES | EQUIPMENT DESIGNATION: | MCC – 1 |
| JOB LOCATION: | SALABERRY–DE–VALLEYFIELD QC | EQUIPMENT TYPE: | MODEL 6 MOTOR CONTROL CENTER |
| DRAWN BY: | CAD | DRAWING TYPE: | ELEMENTARY |
| ENGR: | MLC | | SQUARE D by Schneider Electric |
| DATE: | MAY 21, 2019 | | |
| DRAWING STATUS: | APPROVAL | DWG# E41428112–001–07 | PG 2 OF 2 REV C |

| REV | DESCRIPTION | BY | DATE | | | | | | | | |
|---|---|---|---|---|---|---|---|---|---|---|---|
| A | APPROVAL RESUBMIT | RN | 06/19/2019 | B | REAPPROVAL | TA | 06/21/2019 | – | ---- | -- | --/--/-- |
| | | | | C | APPROVAL RESUBMITAL | MLC | 07/11/2019 | – | ---- | -- | --/--/-- |

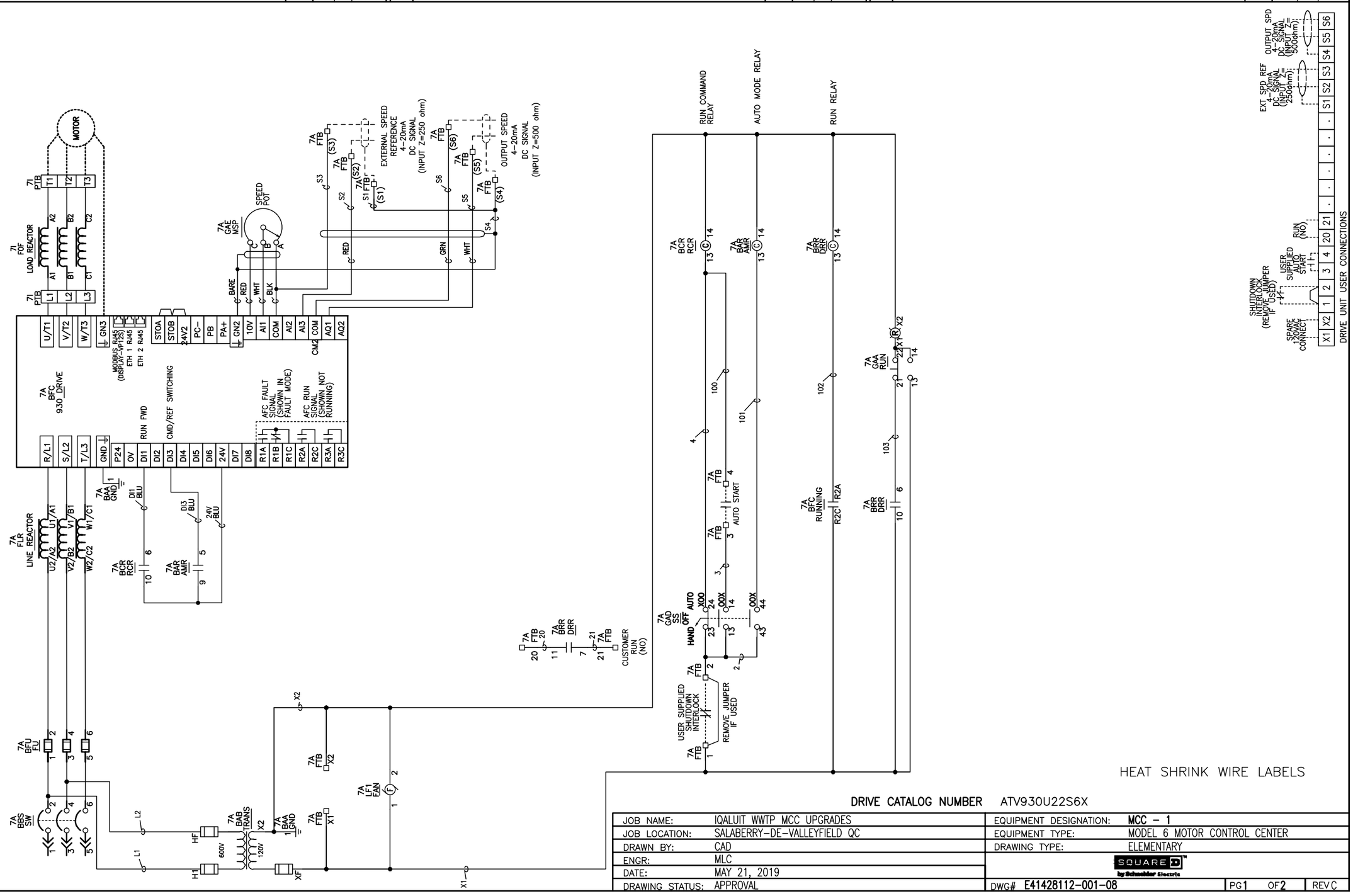


HEAT SHRINK WIRE LABELS

**DRIVE CATALOG NUMBER** ATV930U22S6X

| | | | |
|---|---|---|---|
| JOB NAME: | IQALUIT WWTP MCC UPGRADES | EQUIPMENT DESIGNATION: | MCC – 1 |
| JOB LOCATION: | SALABERRY-DE-VALLEYFIELD QC | EQUIPMENT TYPE: | MODEL 6 MOTOR CONTROL CENTER |
| DRAWN BY: | CAD | DRAWING TYPE: | ELEMENTARY |
| ENGR: | MLC | | SQUARE D by Schneider Electric |
| DATE: | MAY 21, 2019 | | |
| DRAWING STATUS: | APPROVAL | DWG# E41428112-001-08 | PG1 OF2 REVC |

| REV | DESCRIPTION | BY | DATE | B | REAPPROVAL | TA | 06/21/2019 |
|---|---|---|---|---|---|---|---|
| A | APPROVAL RESUBMIT | RN | 06/19/2019 | C | APPROVAL RESUBMITAL | MLC | 07/11/2019 |

| ATV930 FACTORY CONFIGURATION – NORMAL DUTY – VARIATIONS FROM DEFAULT HOA | | | | | | |
|---|---|---|---|---|---|---|
| MENU | TAB | SUB–MENU | DESCRIPTION | SETTING | CODE | ADJ. |
| 1 | S.START | –––– | 2/3 WIRE CONTROL | 2C | TCC | 2C |
| 1 | S.START | –––– | BASIC FREQUENCY | 60Hz NEMA | BFR | 60 |
| 1 | S.START | –––– | MAX FREQUENCY | 60 | TFR | 60 |
| 1 | S.START | –––– | LOW SPEED | 3 | LSP | 3 |
| 1 | S.START | –––– | ACCELERATION | 10 | ACC | 10 |
| 1 | S.START | –––– | DECELERATION | 10 | DEC | 10 |
| 5.2 | ––– | SWITCHING FREQUENCY | SWITCHING FREQUENCY | 2.5 | SFR | 2.5 |
| 5.4 | ––– | –––– | REF FREQ 1 CONFIG | AI1 | FR1 | AI1 |
| 5.4 | ––– | –––– | FREQ SWITCH ASSIGN | DI3 | RFC | DI3 |
| 5.4 | ––– | –––– | 2–WIRE TYPE | LEVEL | TCT | LEL |
| 5.4 | ––– | –––– | REF FREQ 2 CONFIG | AI3 | FR2 | AI3 |
| 5.4 | ––– | CONTROL MODE | CONTROL MODE | CONTROL MODE I/O PROFILE | CHCF | IO |
| 5.4 | ––– | COMMAND SWITCHING | COMMAND SWITCHING | DI3 | CCS | DI3 |
| 5.4 | ––– | CMD CHANNEL 1 | CMD CHANNEL 1 | TERMINAL | CD1 | TER |
| 5.4 | ––– | CMD CHANNEL 2 | CMD CHANNEL 2 | TERMINAL | CD2 | TER |
| 5.14 | AI/AQ | AI3 CONFIGURATION | AI3 MIN VALUE | 4 | CLR3 | 4 |
| 5.14 | AI/AQ | AQ1 CONFIGURATION | AQ1 ASSIGNMENT | MOTOR FREQUENCY | AO1 | OFR |
| 5.14 | AI/AQ | AQ1 TYPE | AQ1 MIN OUTPUT | CURRENT | AO1T | 0A |
| 5.14 | AI/AQ | AQ1 CONFIGURATION | AQ1 MIN OUTPUT | 4 | AOL1 | 4 |
| 5.14 | RELAY | R1 CONFIGURATION | R1 ASSIGNMENT | OPERATING STATE | R1 | FLT |
| 5.14 | RELAY | R2 CONFIGURATION | R2 ASSIGNMENT | DRIVE RUNNING | R2 | RUN |
| 5.16 | ––– | CATCH ON THE FLY | CATCH ON THE FLY | YES | FLR | YES |

| | | | |
|---|---|---|---|
| JOB NAME: | IQALUIT WWTP MCC UPGRADES | EQUIPMENT DESIGNATION: | MCC – 1 |
| JOB LOCATION: | SALABERRY–DE–VALLEYFIELD QC | EQUIPMENT TYPE: | MODEL 6 MOTOR CONTROL CENTER |
| DRAWN BY: | CAD | DRAWING TYPE: | ELEMENTARY |
| ENGR: | MLC | | SQUARE D by Schneider Electric |
| DATE: | MAY 21, 2019 | | |
| DRAWING STATUS: | APPROVAL | DWG# E41428112–001–08 | PG 2 OF 2 REV C |

| REV | DESCRIPTION | BY | DATE | | | | | | | | |
|---|---|---|---|---|---|---|---|---|---|---|---|
| A | APPROVAL RESUBMIT | RN | 06/19/2019 | B | REAPPROVAL | TA | 06/21/2019 | – | ---- | -- | --/--/-- |
| | | | | C | APPROVAL RESUBMITAL | MLC | 07/11/2019 | – | ---- | -- | --/--/-- |

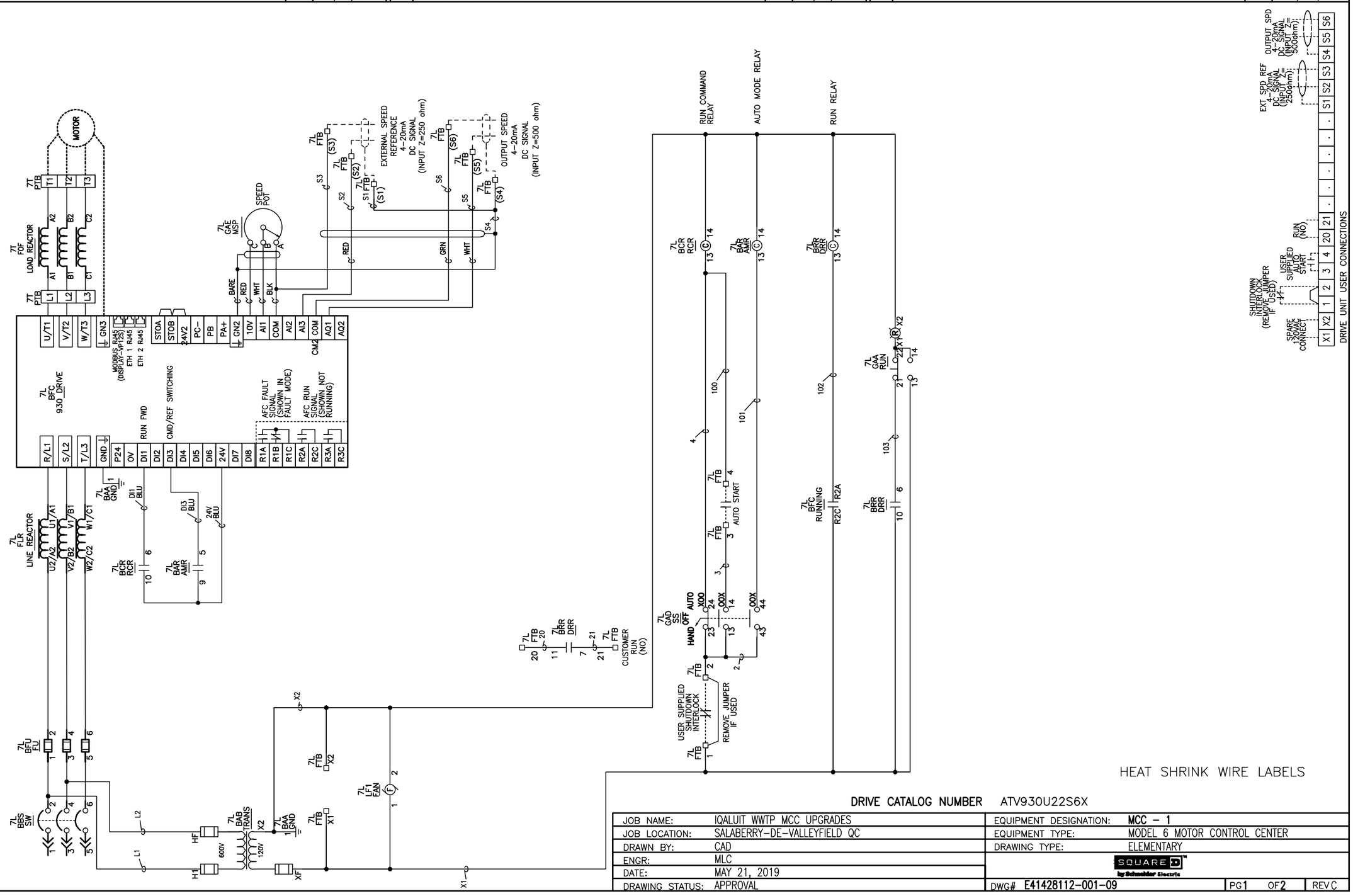


HEAT SHRINK WIRE LABELS

**DRIVE CATALOG NUMBER** ATV930U22S6X

| | | | |
|---|---|---|---|
| JOB NAME: | IQALUIT WWTP MCC UPGRADES | EQUIPMENT DESIGNATION: | MCC – 1 |
| JOB LOCATION: | SALABERRY-DE-VALLEYFIELD QC | EQUIPMENT TYPE: | MODEL 6 MOTOR CONTROL CENTER |
| DRAWN BY: | CAD | DRAWING TYPE: | ELEMENTARY |
| ENGR: | MLC | | SQUARE D by Schneider Electric |
| DATE: | MAY 21, 2019 | | |
| DRAWING STATUS: | APPROVAL | DWG# E41428112-001-09 | PG1 OF2 REVC |

| REV | DESCRIPTION | BY | DATE | B | REAPPROVAL | TA | 06/21/2019 |
|---|---|---|---|---|---|---|---|
| A | APPROVAL RESUBMIT | RN | 06/19/2019 | C | APPROVAL RESUBMITAL | MLC | 07/11/2019 |

| ATV930 FACTORY CONFIGURATION – NORMAL DUTY – VARIATIONS FROM DEFAULT HOA | | | | | | |
|---|---|---|---|---|---|---|
| MENU | TAB | SUB–MENU | DESCRIPTION | SETTING | CODE | ADJ. |
| 1 | S.START | –––– | 2/3 WIRE CONTROL | 2C | TCC | 2C |
| 1 | S.START | –––– | BASIC FREQUENCY | 60Hz NEMA | BFR | 60 |
| 1 | S.START | –––– | MAX FREQUENCY | 60 | TFR | 60 |
| 1 | S.START | –––– | LOW SPEED | 3 | LSP | 3 |
| 1 | S.START | –––– | ACCELERATION | 10 | ACC | 10 |
| 1 | S.START | –––– | DECELERATION | 10 | DEC | 10 |
| 5.2 | ––– | SWITCHING FREQUENCY | SWITCHING FREQUENCY | 2.5 | SFR | 2.5 |
| 5.4 | ––– | –––– | REF FREQ 1 CONFIG | AI1 | FR1 | AI1 |
| 5.4 | ––– | –––– | FREQ SWITCH ASSIGN | DI3 | RFC | DI3 |
| 5.4 | ––– | –––– | 2–WIRE TYPE | LEVEL | TCT | LEL |
| 5.4 | ––– | –––– | REF FREQ 2 CONFIG | AI3 | FR2 | AI3 |
| 5.4 | ––– | CONTROL MODE | CONTROL MODE | CONTROL MODE I/O PROFILE | CHCF | IO |
| 5.4 | ––– | COMMAND SWITCHING | COMMAND SWITCHING | DI3 | CCS | DI3 |
| 5.4 | ––– | CMD CHANNEL 1 | CMD CHANNEL 1 | TERMINAL | CD1 | TER |
| 5.4 | ––– | CMD CHANNEL 2 | CMD CHANNEL 2 | TERMINAL | CD2 | TER |
| 5.14 | AI/AQ | AI3 CONFIGURATION | AI3 MIN VALUE | 4 | CLR3 | 4 |
| 5.14 | AI/AQ | AQ1 CONFIGURATION | AQ1 ASSIGNMENT | MOTOR FREQUENCY | AO1 | OFR |
| 5.14 | AI/AQ | AQ1 TYPE | AQ1 MIN OUTPUT | CURRENT | AO1T | 0A |
| 5.14 | AI/AQ | AQ1 CONFIGURATION | AQ1 MIN OUTPUT | 4 | AOL1 | 4 |
| 5.14 | RELAY | R1 CONFIGURATION | R1 ASSIGNMENT | OPERATING STATE | R1 | FLT |
| 5.14 | RELAY | R2 CONFIGURATION | R2 ASSIGNMENT | DRIVE RUNNING | R2 | RUN |
| 5.16 | ––– | CATCH ON THE FLY | CATCH ON THE FLY | YES | FLR | YES |

| | | | |
|---|---|---|---|
| JOB NAME: | IQALUIT WWTP MCC UPGRADES | EQUIPMENT DESIGNATION: | MCC – 1 |
| JOB LOCATION: | SALABERRY–DE–VALLEYFIELD QC | EQUIPMENT TYPE: | MODEL 6 MOTOR CONTROL CENTER |
| DRAWN BY: | CAD | DRAWING TYPE: | ELEMENTARY |
| ENGR: | MLC | | SQUARE D by Schneider Electric |
| DATE: | MAY 21, 2019 | | |
| DRAWING STATUS: | APPROVAL | DWG# E41428112–001–09 | PG 2 OF 2 REV C |

| REV | DESCRIPTION | BY | DATE | | | | | | | | |
|---|---|---|---|---|---|---|---|---|---|---|---|
| A | APPROVAL RESUBMIT | RN | 06/19/2019 | B | REAPPROVAL | TA | 06/21/2019 | – | ---- | -- | --/--/-- |
| | | | | C | APPROVAL RESUBMITAL | MLC | 07/11/2019 | – | ---- | -- | --/--/-- |

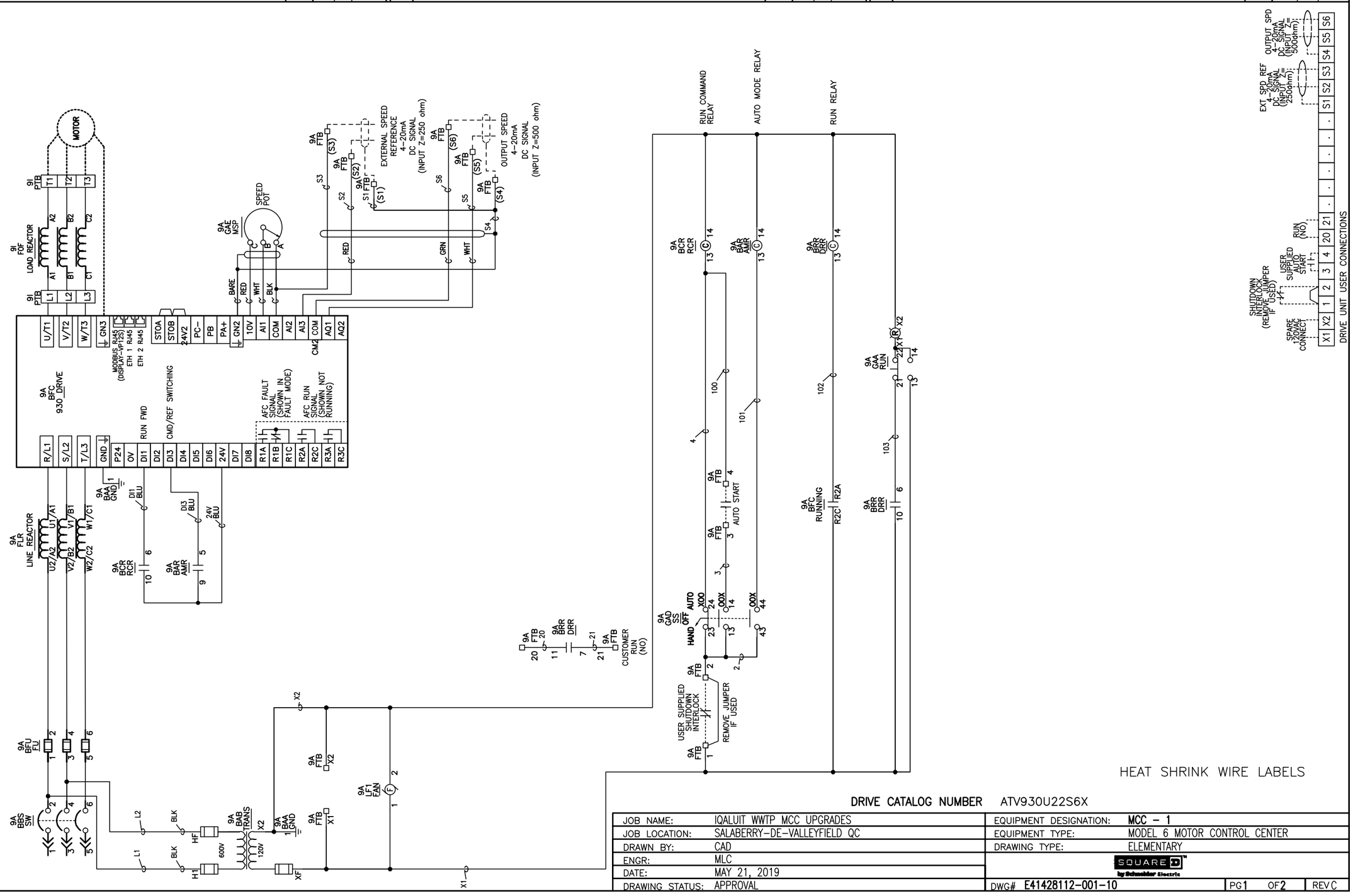


HEAT SHRINK WIRE LABELS

**DRIVE CATALOG NUMBER** ATV930U22S6X

| | | | |
|---|---|---|---|
| JOB NAME: | IQALUIT WWTP MCC UPGRADES | EQUIPMENT DESIGNATION: | MCC – 1 |
| JOB LOCATION: | SALABERRY-DE-VALLEYFIELD QC | EQUIPMENT TYPE: | MODEL 6 MOTOR CONTROL CENTER |
| DRAWN BY: | CAD | DRAWING TYPE: | ELEMENTARY |
| ENGR: | MLC | | SQUARE D by Schneider Electric |
| DATE: | MAY 21, 2019 | | |
| DRAWING STATUS: | APPROVAL | DWG# E41428112-001-10 | PG1 OF2 REVC |

| REV | DESCRIPTION | BY | DATE | B | REAPPROVAL | TA | 06/21/2019 |
|---|---|---|---|---|---|---|---|
| A | APPROVAL RESUBMIT | RN | 06/19/2019 | C | APPROVAL RESUBMITAL | MLC | 07/11/2019 |

| ATV930 FACTORY CONFIGURATION – NORMAL DUTY – VARIATIONS FROM DEFAULT HOA | | | | | | |
|---|---|---|---|---|---|---|
| MENU | TAB | SUB–MENU | DESCRIPTION | SETTING | CODE | ADJ. |
| 1 | S.START | –––– | 2/3 WIRE CONTROL | 2C | TCC | 2C |
| 1 | S.START | –––– | BASIC FREQUENCY | 60Hz NEMA | BFR | 60 |
| 1 | S.START | –––– | MAX FREQUENCY | 60 | TFR | 60 |
| 1 | S.START | –––– | LOW SPEED | 3 | LSP | 3 |
| 1 | S.START | –––– | ACCELERATION | 10 | ACC | 10 |
| 1 | S.START | –––– | DECELERATION | 10 | DEC | 10 |
| 5.2 | ––– | SWITCHING FREQUENCY | SWITCHING FREQUENCY | 2.5 | SFR | 2.5 |
| 5.4 | ––– | –––– | REF FREQ 1 CONFIG | AI1 | FR1 | AI1 |
| 5.4 | ––– | –––– | FREQ SWITCH ASSIGN | DI3 | RFC | DI3 |
| 5.4 | ––– | –––– | 2–WIRE TYPE | LEVEL | TCT | LEL |
| 5.4 | ––– | –––– | REF FREQ 2 CONFIG | AI3 | FR2 | AI3 |
| 5.4 | ––– | CONTROL MODE | CONTROL MODE | CONTROL MODE I/O PROFILE | CHCF | IO |
| 5.4 | ––– | COMMAND SWITCHING | COMMAND SWITCHING | DI3 | CCS | DI3 |
| 5.4 | ––– | CMD CHANNEL 1 | CMD CHANNEL 1 | TERMINAL | CD1 | TER |
| 5.4 | ––– | CMD CHANNEL 2 | CMD CHANNEL 2 | TERMINAL | CD2 | TER |
| 5.14 | AI/AQ | AI3 CONFIGURATION | AI3 MIN VALUE | 4 | CLR3 | 4 |
| 5.14 | AI/AQ | AQ1 CONFIGURATION | AQ1 ASSIGNMENT | MOTOR FREQUENCY | AO1 | OFR |
| 5.14 | AI/AQ | AQ1 TYPE | AQ1 MIN OUTPUT | CURRENT | AO1T | 0A |
| 5.14 | AI/AQ | AQ1 CONFIGURATION | AQ1 MIN OUTPUT | 4 | AOL1 | 4 |
| 5.14 | RELAY | R1 CONFIGURATION | R1 ASSIGNMENT | OPERATING STATE | R1 | FLT |
| 5.14 | RELAY | R2 CONFIGURATION | R2 ASSIGNMENT | DRIVE RUNNING | R2 | RUN |
| 5.16 | ––– | CATCH ON THE FLY | CATCH ON THE FLY | YES | FLR | YES |

| | | | |
|---|---|---|---|
| JOB NAME: | IQALUIT WWTP MCC UPGRADES | EQUIPMENT DESIGNATION: | MCC – 1 |
| JOB LOCATION: | SALABERRY–DE–VALLEYFIELD QC | EQUIPMENT TYPE: | MODEL 6 MOTOR CONTROL CENTER |
| DRAWN BY: | CAD | DRAWING TYPE: | ELEMENTARY |
| ENGR: | MLC | | SQUARE D by Schneider Electric |
| DATE: | MAY 21, 2019 | | |
| DRAWING STATUS: | APPROVAL | DWG# E41428112–001–10 | PG 2 OF 2 REV C |

| REV | DESCRIPTION | BY | DATE | | | | | | | | |
|---|---|---|---|---|---|---|---|---|---|---|---|
| A | APPROVAL RESUBMIT | RN | 06/19/2019 | B | REAPPROVAL | TA | 06/21/2019 | – | ---- | -- | --/--/-- |
| | | | | C | APPROVAL RESUBMITAL | MLC | 07/11/2019 | – | ---- | -- | --/--/-- |

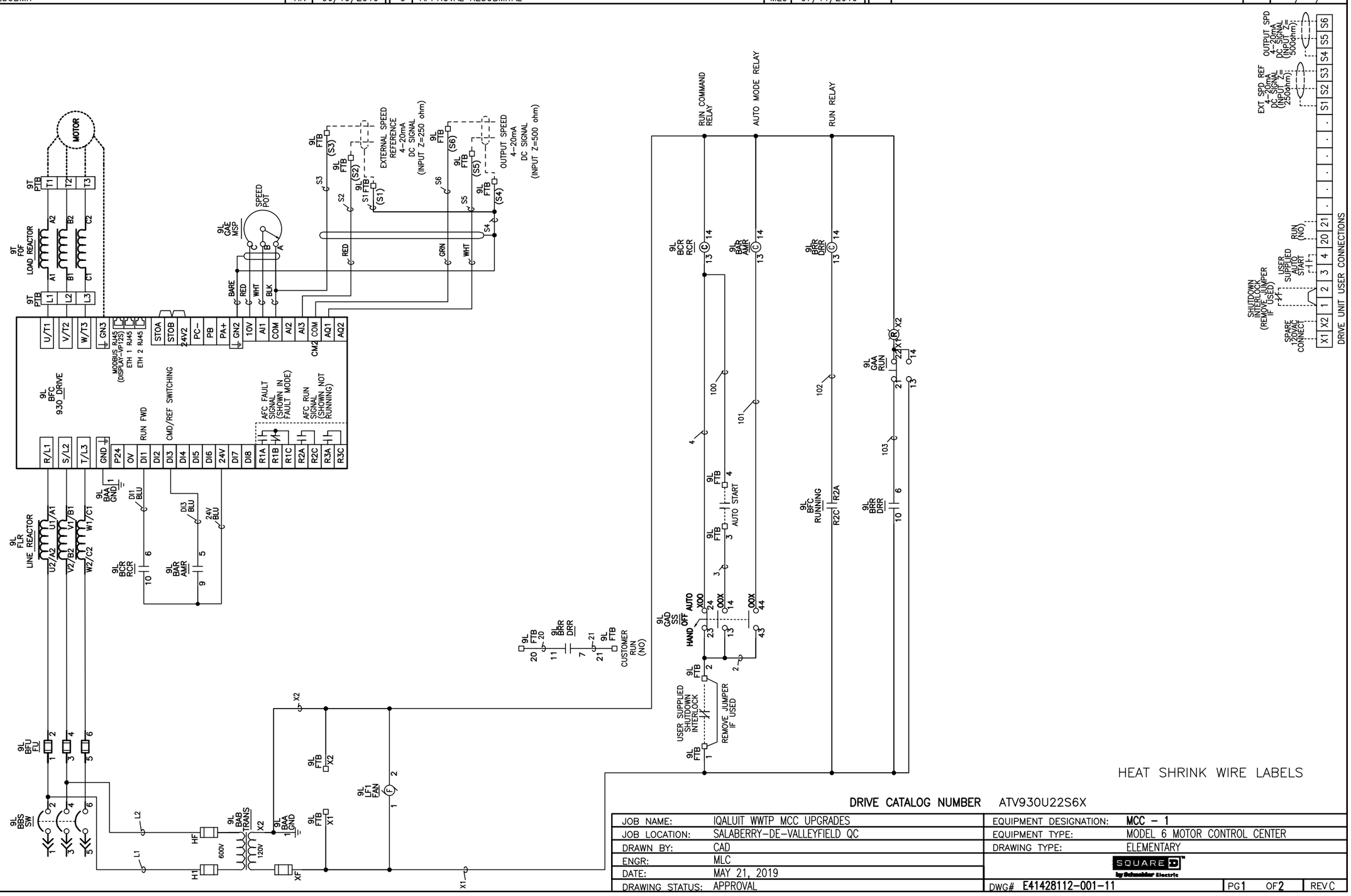


HEAT SHRINK WIRE LABELS

**DRIVE CATALOG NUMBER** ATV930U22S6X

| | | | |
|---|---|---|---|
| JOB NAME: | IQALUIT WWTP MCC UPGRADES | EQUIPMENT DESIGNATION: | MCC – 1 |
| JOB LOCATION: | SALABERRY-DE-VALLEYFIELD QC | EQUIPMENT TYPE: | MODEL 6 MOTOR CONTROL CENTER |
| DRAWN BY: | CAD | DRAWING TYPE: | ELEMENTARY |
| ENGR: | MLC | | SQUARE D by Schneider Electric |
| DATE: | MAY 21, 2019 | | |
| DRAWING STATUS: | APPROVAL | DWG# E41428112-001-11 | PG1 OF2 REVC |

| REV | DESCRIPTION | BY | DATE | B | REAPPROVAL | TA | 06/21/2019 |
|---|---|---|---|---|---|---|---|
| A | APPROVAL RESUBMIT | RN | 06/19/2019 | C | APPROVAL RESUBMITAL | MLC | 07/11/2019 |

| ATV930 FACTORY CONFIGURATION – NORMAL DUTY – VARIATIONS FROM DEFAULT HOA | | | | | | |
|---|---|---|---|---|---|---|
| MENU | TAB | SUB–MENU | DESCRIPTION | SETTING | CODE | ADJ. |
| 1 | S.START | –––– | 2/3 WIRE CONTROL | 2C | TCC | 2C |
| 1 | S.START | –––– | BASIC FREQUENCY | 60Hz NEMA | BFR | 60 |
| 1 | S.START | –––– | MAX FREQUENCY | 60 | TFR | 60 |
| 1 | S.START | –––– | LOW SPEED | 3 | LSP | 3 |
| 1 | S.START | –––– | ACCELERATION | 10 | ACC | 10 |
| 1 | S.START | –––– | DECELERATION | 10 | DEC | 10 |
| 5.2 | ––– | SWITCHING FREQUENCY | SWITCHING FREQUENCY | 2.5 | SFR | 2.5 |
| 5.4 | ––– | –––– | REF FREQ 1 CONFIG | AI1 | FR1 | AI1 |
| 5.4 | ––– | –––– | FREQ SWITCH ASSIGN | DI3 | RFC | DI3 |
| 5.4 | ––– | –––– | 2–WIRE TYPE | LEVEL | TCT | LEL |
| 5.4 | ––– | –––– | REF FREQ 2 CONFIG | AI3 | FR2 | AI3 |
| 5.4 | ––– | CONTROL MODE | CONTROL MODE | CONTROL MODE I/O PROFILE | CHCF | IO |
| 5.4 | ––– | COMMAND SWITCHING | COMMAND SWITCHING | DI3 | CCS | DI3 |
| 5.4 | ––– | CMD CHANNEL 1 | CMD CHANNEL 1 | TERMINAL | CD1 | TER |
| 5.4 | ––– | CMD CHANNEL 2 | CMD CHANNEL 2 | TERMINAL | CD2 | TER |
| 5.14 | AI/AQ | AI3 CONFIGURATION | AI3 MIN VALUE | 4 | CLR3 | 4 |
| 5.14 | AI/AQ | AQ1 CONFIGURATION | AQ1 ASSIGNMENT | MOTOR FREQUENCY | AO1 | OFR |
| 5.14 | AI/AQ | AQ1 TYPE | AQ1 MIN OUTPUT | CURRENT | AO1T | 0A |
| 5.14 | AI/AQ | AQ1 CONFIGURATION | AQ1 MIN OUTPUT | 4 | AOL1 | 4 |
| 5.14 | RELAY | R1 CONFIGURATION | R1 ASSIGNMENT | OPERATING STATE | R1 | FLT |
| 5.14 | RELAY | R2 CONFIGURATION | R2 ASSIGNMENT | DRIVE RUNNING | R2 | RUN |
| 5.16 | ––– | CATCH ON THE FLY | CATCH ON THE FLY | YES | FLR | YES |

| | | | |
|---|---|---|---|
| JOB NAME: | IQALUIT WWTP MCC UPGRADES | EQUIPMENT DESIGNATION: | MCC – 1 |
| JOB LOCATION: | SALABERRY–DE–VALLEYFIELD QC | EQUIPMENT TYPE: | MODEL 6 MOTOR CONTROL CENTER |
| DRAWN BY: | CAD | DRAWING TYPE: | ELEMENTARY |
| ENGR: | MLC | | SQUARE D by Schneider Electric |
| DATE: | MAY 21, 2019 | | |
| DRAWING STATUS: | APPROVAL | DWG# E41428112–001–11 | PG 2 OF 2 REV C |

| REV | DESCRIPTION | BY | DATE | | | | | | | | |
|---|---|---|---|---|---|---|---|---|---|---|---|
| A | APPROVAL RESUBMIT | RN | 06/19/2019 | B | REAPPROVAL | TA | 06/21/2019 | – | ---- | -- | --/--/-- |
| | | | | C | APPROVAL RESUBMITAL | MLC | 07/11/2019 | – | ---- | -- | --/--/-- |

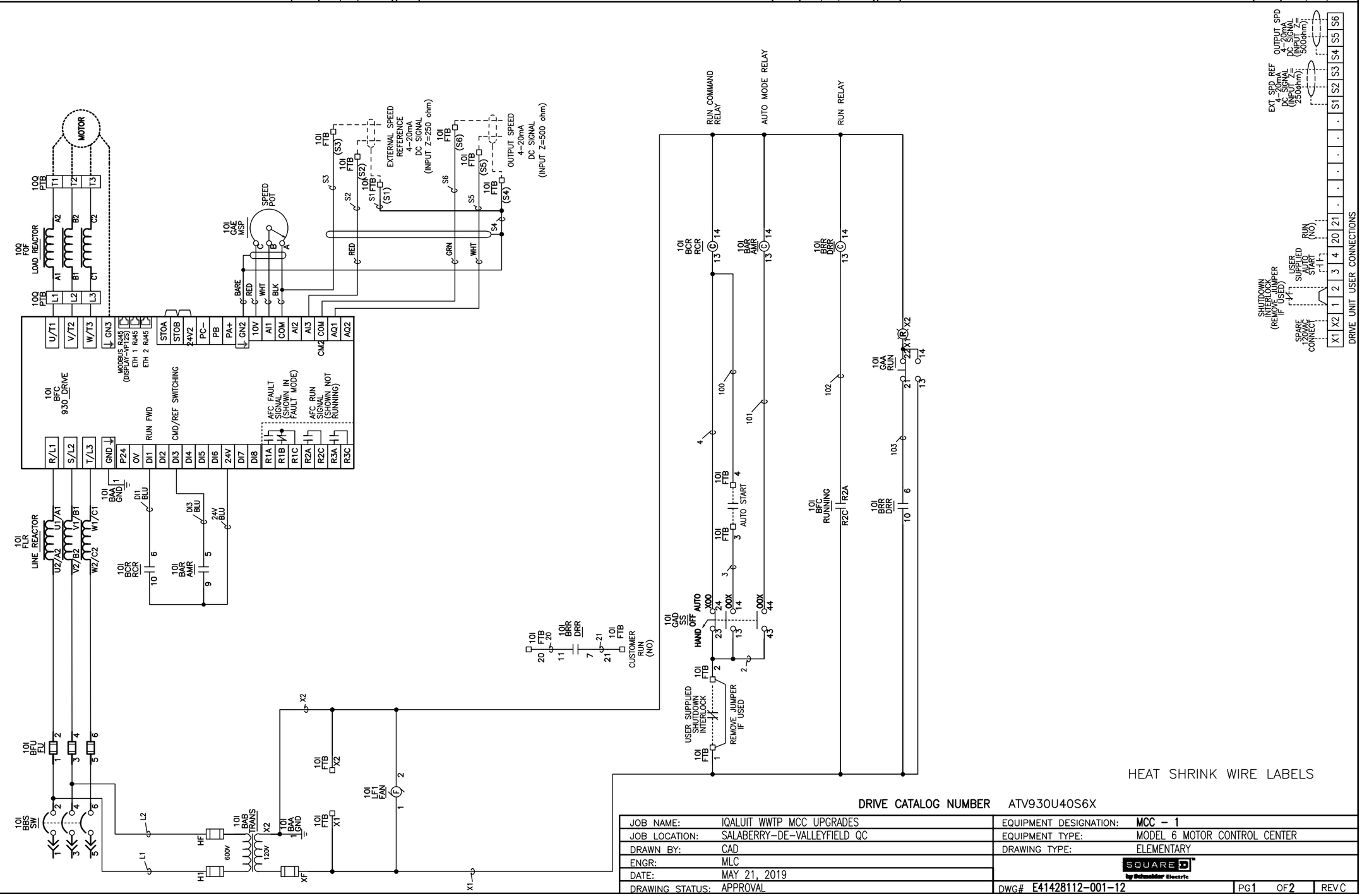


HEAT SHRINK WIRE LABELS

**DRIVE CATALOG NUMBER** ATV930U40S6X

| | | | |
|---|---|---|---|
| JOB NAME: | IQALUIT WWTP MCC UPGRADES | EQUIPMENT DESIGNATION: | MCC – 1 |
| JOB LOCATION: | SALABERRY-DE-VALLEYFIELD QC | EQUIPMENT TYPE: | MODEL 6 MOTOR CONTROL CENTER |
| DRAWN BY: | CAD | DRAWING TYPE: | ELEMENTARY |
| ENGR: | MLC | | SQUARE D by Schneider Electric |
| DATE: | MAY 21, 2019 | | |
| DRAWING STATUS: | APPROVAL | DWG# E41428112-001-12 | PG1 OF2 REVC |

| REV | DESCRIPTION | BY | DATE | B | REAPPROVAL | TA | 06/21/2019 |
|---|---|---|---|---|---|---|---|
| A | APPROVAL RESUBMIT | RN | 06/19/2019 | C | APPROVAL RESUBMITAL | MLC | 07/11/2019 |

| ATV930 FACTORY CONFIGURATION – NORMAL DUTY – VARIATIONS FROM DEFAULT HOA | | | | | | |
|---|---|---|---|---|---|---|
| MENU | TAB | SUB–MENU | DESCRIPTION | SETTING | CODE | ADJ. |
| 1 | S.START | –––– | 2/3 WIRE CONTROL | 2C | TCC | 2C |
| 1 | S.START | –––– | BASIC FREQUENCY | 60Hz NEMA | BFR | 60 |
| 1 | S.START | –––– | MAX FREQUENCY | 60 | TFR | 60 |
| 1 | S.START | –––– | LOW SPEED | 3 | LSP | 3 |
| 1 | S.START | –––– | ACCELERATION | 10 | ACC | 10 |
| 1 | S.START | –––– | DECELERATION | 10 | DEC | 10 |
| 5.2 | ––– | SWITCHING FREQUENCY | SWITCHING FREQUENCY | 2.5 | SFR | 2.5 |
| 5.4 | ––– | –––– | REF FREQ 1 CONFIG | AI1 | FR1 | AI1 |
| 5.4 | ––– | –––– | FREQ SWITCH ASSIGN | DI3 | RFC | DI3 |
| 5.4 | ––– | –––– | 2–WIRE TYPE | LEVEL | TCT | LEL |
| 5.4 | ––– | –––– | REF FREQ 2 CONFIG | AI3 | FR2 | AI3 |
| 5.4 | ––– | CONTROL MODE | CONTROL MODE | CONTROL MODE I/O PROFILE | CHCF | IO |
| 5.4 | ––– | COMMAND SWITCHING | COMMAND SWITCHING | DI3 | CCS | DI3 |
| 5.4 | ––– | CMD CHANNEL 1 | CMD CHANNEL 1 | TERMINAL | CD1 | TER |
| 5.4 | ––– | CMD CHANNEL 2 | CMD CHANNEL 2 | TERMINAL | CD2 | TER |
| 5.14 | AI/AQ | AI3 CONFIGURATION | AI3 MIN VALUE | 4 | CLR3 | 4 |
| 5.14 | AI/AQ | AQ1 CONFIGURATION | AQ1 ASSIGNMENT | MOTOR FREQUENCY | AO1 | OFR |
| 5.14 | AI/AQ | AQ1 TYPE | AQ1 MIN OUTPUT | CURRENT | AO1T | 0A |
| 5.14 | AI/AQ | AQ1 CONFIGURATION | AQ1 MIN OUTPUT | 4 | AOL1 | 4 |
| 5.14 | RELAY | R1 CONFIGURATION | R1 ASSIGNMENT | OPERATING STATE | R1 | FLT |
| 5.14 | RELAY | R2 CONFIGURATION | R2 ASSIGNMENT | DRIVE RUNNING | R2 | RUN |
| 5.16 | ––– | CATCH ON THE FLY | CATCH ON THE FLY | YES | FLR | YES |

| | | | |
|---|---|---|---|
| JOB NAME: | IQALUIT WWTP MCC UPGRADES | EQUIPMENT DESIGNATION: | MCC – 1 |
| JOB LOCATION: | SALABERRY–DE–VALLEYFIELD QC | EQUIPMENT TYPE: | MODEL 6 MOTOR CONTROL CENTER |
| DRAWN BY: | CAD | DRAWING TYPE: | ELEMENTARY |
| ENGR: | MLC | | SQUARE D by Schneider Electric |
| DATE: | MAY 21, 2019 | | |
| DRAWING STATUS: | APPROVAL | DWG# E41428112–001–12 | PG 2 OF 2 REV C |

| REV | DESCRIPTION | BY | DATE | B | REAPPROVAL | TA | 06/21/2019 |
|---|---|---|---|---|---|---|---|
| A | APPROVAL RESUBMIT | RN | 06/19/2019 | C | APPROVAL RESUBMITAL | MLC | 07/11/2019 |

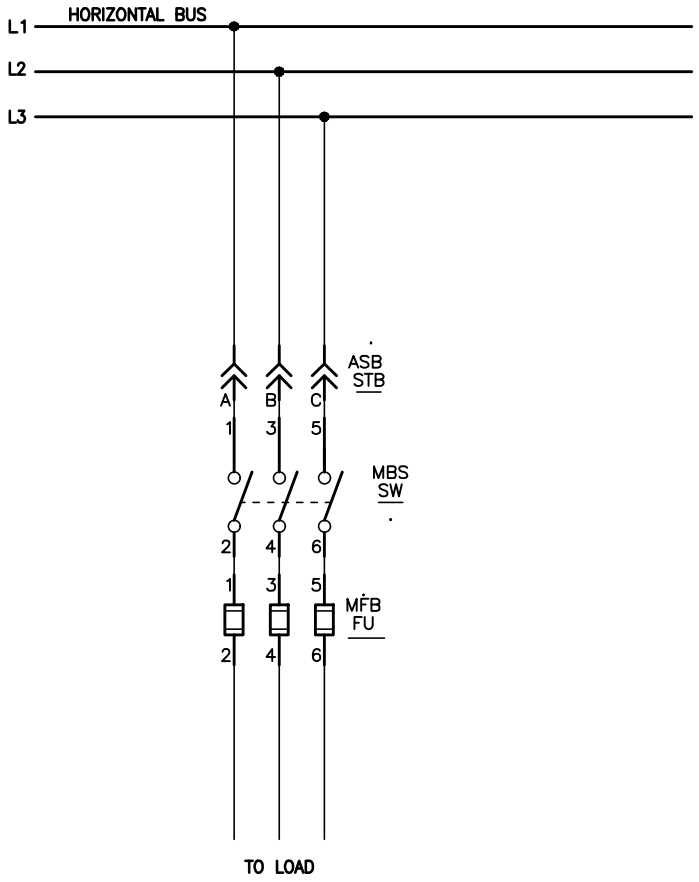


POWER FUSES NOT INCLUDED

| | | | |
|---|---|---|---|
| JOB NAME: | IQALUIT WWTP MCC UPGRADES | EQUIPMENT DESIGNATION: | MCC – 1 |
| JOB LOCATION: | SALABERRY–DE–VALLEYFIELD QC | EQUIPMENT TYPE: | MODEL 6 MOTOR CONTROL CENTER |
| DRAWN BY: | CAD | DRAWING TYPE: | ELEMENTARY |
| ENGR: | MLC | | SQUARE D by Schneider Electric |
| DATE: | MAY 21, 2019 | | |
| DRAWING STATUS: | APPROVAL | DWG# E41428112–001–13 | PG 1 OF 1 REV C |

Arctic Electrical Nunavut Ltd
PO Box 1381, Iqaluit, NU X0A 0H0 -P867-975-3494

# 26 29 23 - Variable Frequency Motor Controllers

Arctic Electrical Nunavut Ltd
PO Box 1381, Iqaluit, NU X0A 0H0 -P867-975-3494

# 26 32 14 - Power Generation Diesel

Arctic Electrical Nunavut Ltd
PO Box 1381, Iqaluit, NU X0A 0H0 -P867-975-3494

# 26 32 14 - Power Generation Diesel

**Date: June 4, 2019**

REVIEWED BY CONTRACTOR
Kudlik Construction Ltd.
NAME: Sandra Rousseau P.Eng
DATE: Jun 04, 2019

# Transmittal

**Arctic Electrical Nunavut Ltd**
PO Box 1381
Iqaluit, Nu.
X0A 0H0
Phone: 867-975-3494
**From: Lee Pitcher**

**Project** **Waste Waste Treatment Plant**
**Location** Iqaluit NU
**To** Kudlik Construction
Contact: Sandra Rousseau P.Eng.
srousseau@kudlik.biz



SE-15R2 SU-ELE15R2
PO-Frontier Power

Attached are the following items:

- [x] Drawings
- [ ] Prints
- [ ] Plans
- [x] Specifications
- [ ] Information
- [ ] Submittals

Other:

THESE ARE TRANSMITTED FOR:

- [ ] Prior Approval
- [ ] Approval
- [ ] Approval as Submitted
- [ ] Approval as Noted
- [x] Resubmittal for Approval
- [ ] Corrections
- [ ] Your Use
- [ ] Review and Comment
- [ ] Record

Bids due on:
Other:

| Qty | Type | MFG | Part |
|---|---|---|---|

26 32 14 Power Generation Diesel-Silencer

STANTEC PROJECT #: 110126045

SUBMITTAL # ELE-15R2 (Generator Silencer)

This review by Stantec is for general conformance with the design concept of Stantec's design of the:

- [ ] Architectural
- [ ] Structural
- [x] Mechanical
- [ ] Electrical
- [ ] Other

component(s) only and does not mean that Stantec has verified or approves the shop drawing(s). The Contractor remains solely responsible for the shop drawing(s) and this review by Stantec does not relieve the Contractor of the Contractor's responsibility for errors or omissions in the shop drawing(s) or for meeting all requirements of the contract documents. This review does not mean that Stantec approves the detailed design inherent in the shop drawing, responsibility for which shall remain with the Contractor submitting same, nor does this review mean that Stantec accepts any deviation of the shop drawing(s) from the contract documents. The Contractor is responsible for confirming all dimensions and correlating them at the job site, for all construction means, methods and techniques, and for coordination of construction work of all trades, including coordination of all shop drawings.

Stantec

- [x] REVIEWED
- [ ] REVIEWED, AS NOTED
- [ ] REVISE AND RESUBMIT
- [ ] NOT REVIEWED

DATE 2019-06-05

BY Brendan Zrum, P.Eng

**Notes:**
Please review the attached approval drawings carefully. Production cannot be scheduled until a signed copy of the final approved drawing are received. Be aware that once drawings are approved, any errors due to incorrect information are the responsibility of the client.

Do not hesitate to contact me if you have any questions or concerns.

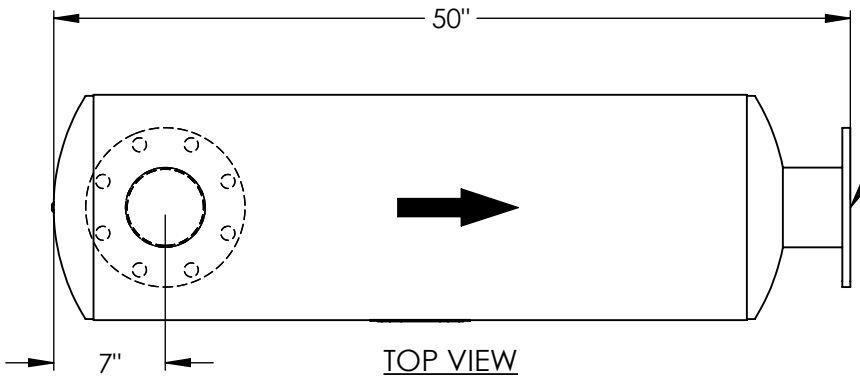


TOP VIEW

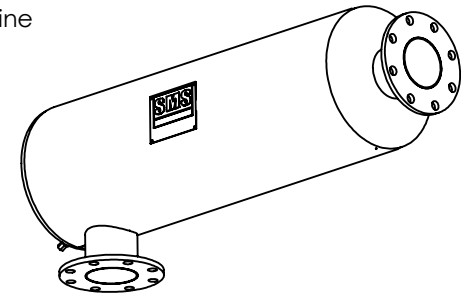


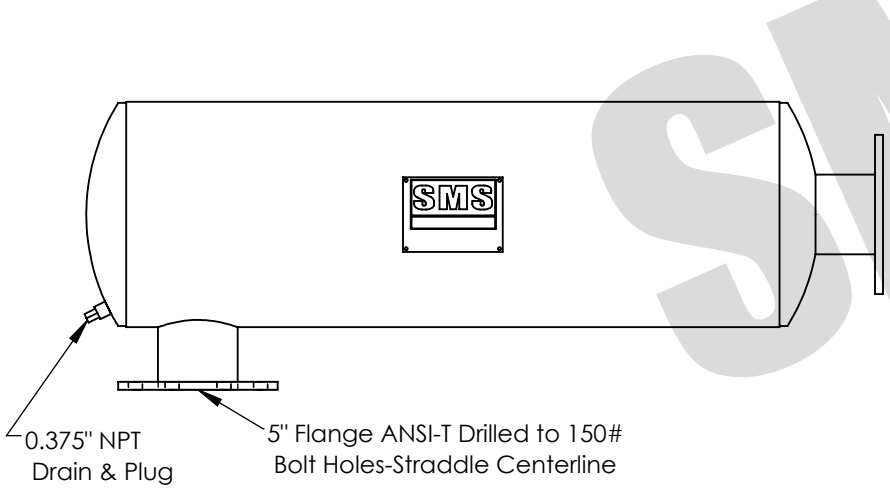


SIDE VIEW

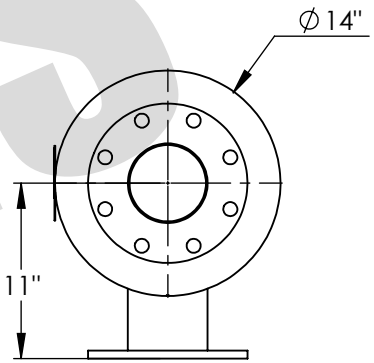


OUTLET END VIEW

P/O # Quote#19710

Standard Specifications

- Material: CS-A36 (44W)
- Uninsulated
- Tolerance — 1/8"; ∠ ±2°
- Finish:
  1,100 F High Heat Black Paint
- Tolerance: ±1/8"
- Weight: 85 lbs

All dimensions are in inches (") unless otherwise stated. Do not scale.

| | | | |
|---|---|---|---|
| Title: 5" Cylindrical Silencer -Standard- Critical Grade (25-30 dBA) Side In-End Out-Carbon Steel | Dwg.Nbr: SM2-5 | Revision: 0 | Plot Scale: NTS |
| | | | Format: A |
| | | | Date: 05/22/2019 09:01:39 |
| Client/Project: Frontier Power WWTP W.O # Quote#19710 | | | |

SMS SILENCERS RESERVES THE PROPIETARY RIGHTS TO THIS DRAWING AND THE DATA SHOWN THEREON AND IS SUBMITTED IN CONFIDENCE ONLY. SAID DRAWING AND/OR DATA ARE NOT TO BE USED OR REPRODUCED FOR ANY PURPOSE WITHOUT WRITTEN CONSENT OF SMS SILENCERS

www.smssilencers.com
sales@smssilencers.com
Tel: 905-459-1512
Fax: 905-459-3138
15 Bramalea Raod Unit#7
Brampton, ON
L6T 2W4

SMS SILENCERS INC.

V.1.0 Dec 10 2016

Project ID# 26110-Brent | Dwg ID# 26111

SMS SILENCERS INC.

SMS Silencers Inc.
7-15 Bramalea Rd.
Brampton, ON, Canada L6T 2W4

Toll Free 800 459 1512
Phone 905 459 1512
Fax 905 459 3138

**Company Info**

Frontier Power Products Ltd.
7983 Progress Way
Delta, BC
V4G 1A3, Canada

Prepared by: Brent MacMillan

**Contact info**

Will Osburn
wosburn@frontierpower.com

# WWTP

| | |
|---|---|
| Genset Manufacturer: | Caterpillar |
| Genset Model: | G3306TA - 220bhp |
| Engine Manufacturer: | Caterpillar |
| Engine Model: | G3306TA |

## Engine Information

| | | | | | | | |
|---|---|---|---|---|---|---|---|
| **Exhaust Flow:** | 967.00 ACFM | **Max BP:** | 27.00 in wg | **Temp:** | 1000.00 Fahrenheit | **KW:** | 165 |
| **Number of Outlets:** | 1 | **Outlet Diameter:** | 5.00 | **Flex Length:** | 18.00 | **Fuel Type:** | Other |

## Engine Octave Band

Engine Exhaust: Sound Pressure Level (LP) measured @ 1.00 m in dB

| 60 Hz | 125 Hz | 250 Hz | 500 Hz | 1 KHz | 2 KHz | 4 KHz | 8 KHz | dB | dBA |
|---|---|---|---|---|---|---|---|---|---|
| 106.00 | 108.00 | 99.00 | 98.00 | 97.00 | 96.00 | 95.00 | 95.00 | 111.22 | 103.51 |

## Catalytic Converter IL.

No Catalytic Converter sound data is given.

## Exhaust Back Pressure Detail

No User Selection for Exhaust data is made.

## Silencer(s) Sizing Result

Silencer(s) Results below is based on user Selection of One Silencer using SMS Default dBA correction & Near Field Distance attenuation:

Recommended Minimum Outlet Size 4"

| Silencer Part # | Description | Outlet Size | Back Pressure |
|---|---|---|---|
| SM2-5-SIEO | 5" Critical Grade Cylindrical Silencer (25-30 dBA) | 5 in | 5.13 in wg |
| Silencer(s) | | | **5.13 in wg** |
| Qty : 1 Flex Dia : 5.00 Flex Length 18.00" | | Flex Connector : | 0.20 in wg |

Exhaust Velocity = 7,095.00 ft/min OR 36 m/s

## Octave Band

| Octave Band | 63 Hz | 125 Hz | 250 Hz | 500 Hz | 1 kHz | 2 kHz | 4 kHz | 8 kHz | dB | dBA |
|---|---|---|---|---|---|---|---|---|---|---|
| Engine SPL @ 1 m | 106.00 | 108.00 | 99.00 | 98.00 | 97.00 | 96.00 | 95.00 | 95.00 | 111.22 | 103.51 |
| Silencer #1 : SM2 dB @ 1 m | 16.00 | 27.00 | 30.00 | 29.00 | 25.00 | 21.00 | 20.00 | 20.00 | 34.74 | 30.85 |
| Catalytic Converter IL. | 0.00 | 0.00 | 0.00 | 0.00 | 0.00 | 0.00 | 0.00 | 0.00 | 0.00 | 0.00 |
| dBA reduction correction | 0.00 | 0.00 | 0.00 | 0.00 | 0.00 | 0.00 | 0.00 | 0.00 | | |
| Resulting SPL @ 1 m | 90.00 | 81.00 | 69.00 | 69.00 | 72.00 | 75.00 | 75.00 | 75.00 | 90.98 | 81.21 |
| | | | | | | | | | | |
| Distance Attenuation dB | 10.14 | 10.14 | 10.14 | 10.14 | 10.14 | 10.14 | 10.14 | 10.14 | | |
| Resulting SPL @7.00 m | 79.86 | 70.86 | 58.86 | 58.86 | 61.86 | 64.86 | 64.86 | 64.86 | 80.84 | 71.07 |

Calculated noise level is based on free field conditions.
No site conditions and no calculation safety factors are taken into consideration.
Typical resulting noise tolerance is +/- 5dBA. No noise result guarantees are implied.

Arctic Electrical Nunavut Ltd
PO Box 1381, Iqaluit, NU X0A 0H0 -P867-975-3494

# 26 36 23 - Automatic Transfer Switch

**Date: Jun 18, 2018**

REVIEWED BY CONTRACTOR
Kudlik Construction Ltd.
NAME: Sandra Rousseau P.Eng
DATE: Jun 18, 2018

# Transmittal

**Arctic Electrical Nunavut Ltd**
PO Box 1381
Iqaluit, Nu.
X0A 0H0
Phone: 867-975-3494
**From: Lee Pitcher**



**Project** **Waste Wate Treatment Plant**
**Location** Iqaluit NU
**To** Kudlik Construction
Contact: Sandra Rousseau P.Eng.
srousseau@kudlik.biz

SE-03
PO-P18-120

Attached are the following items:

- [x] Drawings
- [ ] Prints
- [ ] Plans
- [x] Specifications
- [ ] Information
- [ ] Submittals

Other:

THESE ARE TRANSMITTED FOR:

- [ ] Prior Approval
- [X] Approval
- [ ] Approval as Submitted
- [ ] Approval as Noted
- [ ] Resubmittal for Approval
- [ ] Corrections
- [ ] Your Use
- [ ] Review and Comment
- [ ] Record

Bids due on:
Other:

| Qty | Type | MFG | Part |
|---|---|---|---|

Drawing E-601-Automatic Transfer Switch

**Notes:**
Please review the attached approval drawings carefully. Production cannot be scheduled until a signed copy of the final approved drawing are received. Be aware that once drawings are approved, any errors due to incorrect information are the responsibility of the client.

Do not hesitate to contact me if you have any questions or concerns.

THOMSON™
POWER SYSTEMS

# APPROVAL DRAWINGS

ATTACHED DOCUMENTS ARE DRAFT FOR REVIEW ONLY AND ARE SUBJECT TO CHANGE WITHOUT NOTICE.

DRAWINGS AND OR OTHER TECHNICAL INFORMATION SUPPLIED BY THOMSON POWER SYSTEMS AS A PART OF A SALE ARE FOR THE PURCHASER'S USE SOLELY IN CONJUNCTION WITH THAT EQUIPMENT, UNLESS SPECIFICALLY AGREED TO OTHERWISE AS A PART OF THE STANDARD TERMS & CONDITIONS.

THE INFORMATION CONTAINED IN THESE DRAWINGS IS THE PROPERTY OF THOMSON POWER SYSTEMS, IT IS NOT TO BE USED DETRIMENTALLY TO OUR INTERESTS.

NOTE:
ANY PROGRAM SETTINGS SHOWN REFLECT FACTORY DEFAULT SETTINGS ONLY. FINAL SETTINGS WILL BE REQUIRED TO BE SET BY THE COMMISSIONING AUTHORITY. FAILURE TO DO SO MAY RESULT IN EQUIPMENT FAILURE.

PROJECT NAME / REFERENCE : IQALUIT WTP

CUSTOMER : FRONTIER POWER PRODUCTS

THOMSON CUSTOMER ORDER : C–058937 REV# : 0

WORKORDER / SERIAL NUMBER : W–102489

MODEL NUMBER : TS873A0400A1CN5BKKAA

ATTACHED DRAWINGS :

| | | | |
|---|---|---|---|
| PHYSICAL LAYOUT & INSTALLATION DETAILS | W–102489–10A | REV# | 0 |
| MCS AC SCHEMATIC | W–102489–20A | REV# | 0 |
| ATS AC CONTROL SCHEMATIC | W–102489–20B | REV# | 0 |
| ATS DC CONTROL SCHEMATIC | W–102489–20C | REV# | 0 |
| STANDARD OPTION SCHEMATIC – CTKIT0400A | W–102489–30A | REV# | 0 |
| STANDARD OPTION SCHEMATIC – PPR–10 | W–102489–30B | REV# | 0 |

STANTEC PROJECT #: 110126045

SUBMITTAL # ELE-003 Automatic Transfer Switch

This review by Stantec is for general conformance with the design concept of Stantec's design of the:

☐ Architectural ☐ Structural ☐ Mechanical ☑ Electrical ☐ Other _____

component(s) only and does not mean that Stantec has verified or approves the shop drawing(s). The Contractor remains solely responsible for the shop drawing(s) and this review by Stantec does not relieve the Contractor of the Contractor's responsibility for errors or omissions in the shop drawing(s) or for meeting all requirements of the contract documents. This review does not mean that Stantec approves the detailed design inherent in the shop drawing, responsibility for which shall remain with the Contractor submitting same, nor does this review mean that Stantec accepts any deviation of the shop drawing(s) from the contract documents. The Contractor is responsible for confirming all dimensions and correlating them at the job site, for all construction means, methods and techniques, and for coordination of construction work of all trades, including coordination of all shop drawings.

Stantec

☐ REVIEWED

☑ REVIEWED, AS NOTED

☐ REVISE AND RESUBMIT

☐ NOT REVIEWED

DATE June 20, 2018

BY Chester Martinez, E.I.T.

Provide 4-position switch as per specifcations- Test, Auto, Manual, Engine Start.

## FEATURES / RATINGS:

| | |
|---|---|
| AMPERAGE : | 400A |
| VOLTAGE : | 347 / 600V (3PH, 4W, GROUNDED NEUTRAL) |
| POLES : | 3–POLE |
| FREQUENCY : | 60HZ |
| CONFIGURATION : | STANDARD ATS |
| APPLICATION : | STANDARD |
| OPERATION : | OPEN TRANSITION |
| ENCLOSURE : | NEMA 2, ASA # 61 GREY |
| ATS CONTROLLER : | TSC900 C/W GHC DISPLAY |

| | |
|---|---|
| UTILITY (OR SOURCE 1) SWITCHING DEVICE : | MOLDED CASE SWITCH |
| GENERATOR (OR SOURCE 2) SWITCHING DEVICE : | MOLDED CASE SWITCH |
| APPROVAL STANDARD : | UL1008 / CSA C22.2.NO 178 |

## SYSTEM OPTIONS:

| | |
|---|---|
| LPM : | TRANSFER SWITCH LOAD POWER METERING (0400A CT KIT) |
| PPR–10 : | PROGRAMMABLE POWER RELAY INCLUDES 10A FORM "C" CONTACT WIRED TO TERMINAL (EXTERNAL 24VDC REQ) |
| CUSTOM OPTION 1 : | NEMA 2 ENCLOSURE C/W DRIP SHIELD |

## SHOP DRAWING / SUBMITTAL REVIEW

☐ APPROVED ☐ APPROVED WITH CHANGES NOTED

☐ REVISE AND RESUBMIT ☐ REJECTED _____

SUBMITTAL WAS RECEIVED FOR DESIGN CONFORMITY AND GENERAL CONFORMANCE TO CONTRACT DOCUMENTS ONLY. THE CONTRACTOR FOR CONFIRMING AND CORRELATING DIMENSIONS AT JOB SITES FOR TOLERANCES, CLEARANCES, QUANTITIES, FABRICATION PROCESSES AND TECHNIQUES OF CONSTRUCTION, COORDINATION OF HIS WORK WITH OTHER TRADES AND FULL COMPLIANCE WITH CONTRACT

BY_____ DATE_____

COMPANY NAME_____

CITY_____STATE / PROV _____

9087A – 198TH STREET, LANGLEY, BC CANADA V1M 3B1
EMAIL : info@thomsonps.com, www.thomsonps.com

REGAL®

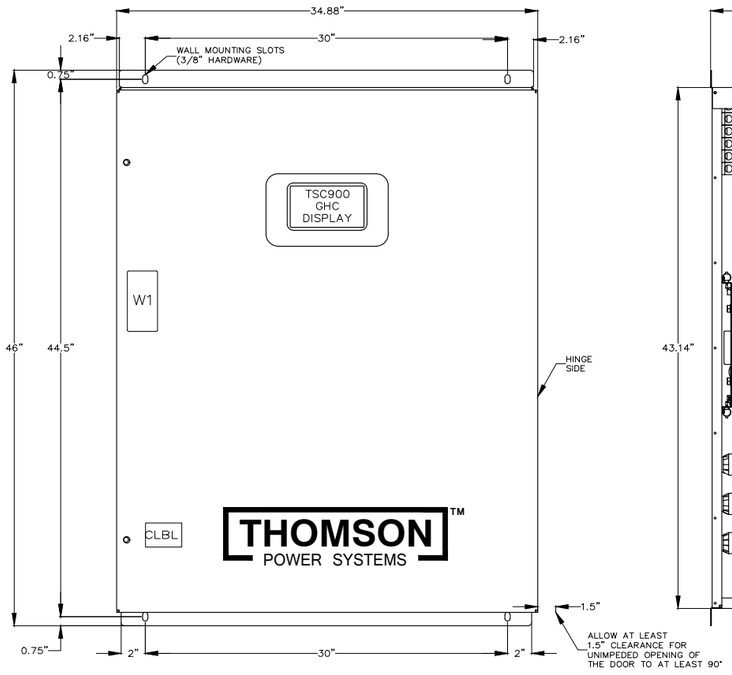


FRONT VIEW

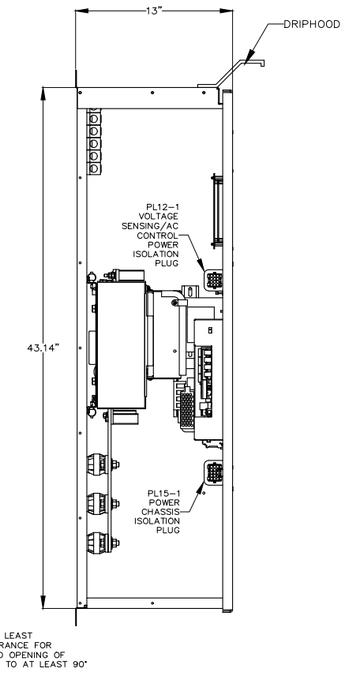


LHS VIEW
(SIDE COVER REMOVED)

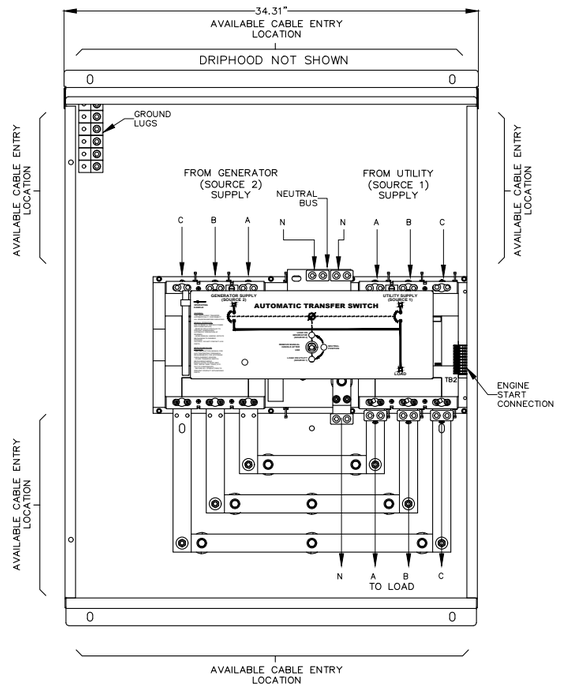


INTERIOR FRONT VIEW

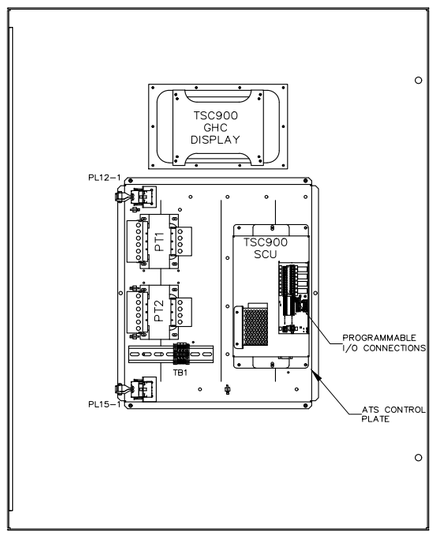


VIEWED FROM REAR
(INSIDE) OF DOOR

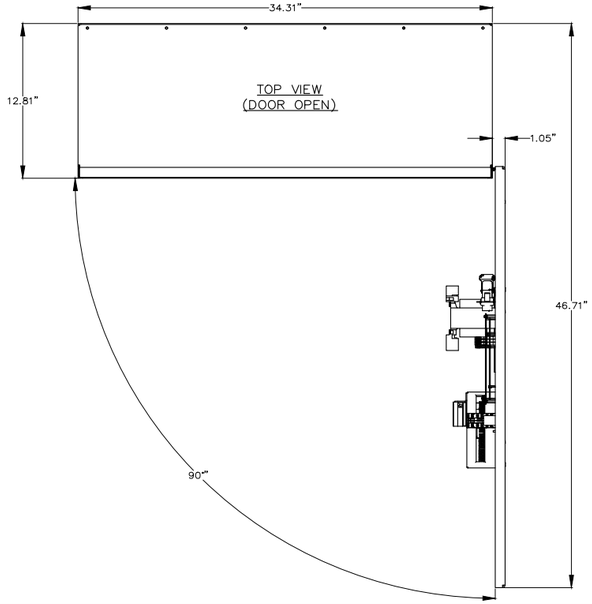


INTERIOR FRONT VIEW
(DOOR NOT SHOWN)

| BASIC MODEL TS87xA | STANDARD ATS | | | | |
|---|---|---|---|---|---|
| | CLOSING AND WITHSTAND RATING AVAILABLE AMPS (RMS) CLOSING & WITHSTAND RATINGS SHOWN ARE ONLY FOR ATS UTILITY AND/OR GENERATOR POWER SWITCHING DEVICE(S) THAT ARE NOT FACTORY SUPPLIED WITH INTEGRAL OVERCURRENT PROTECTION. PLEASE REFER TO PRODUCT INSTRUCTION MANUAL FOR FURTHER INFORMATION ON UPSTREAM PROTECTION REQUIREMENT. | | | | |
| | MAX. VOLTAGE | RATED CURRENT (A) | @240V | @480V | @600V |
| TS 873A-400 | 600 | 400 | 65,000 | 50,000 | 35,000 |

| CONNECTION DATA | | |
|---|---|---|
| 400A ATS | UTILITY (SRC1) | 1-2C, 2/0-500MCM Cu/Al PER PHASE |
| | GENERATOR (SRC2) | 1-2C, 2/0-500MCM Cu/Al PER PHASE |
| | LOAD | 1-2C, 2/0-500MCM Cu/Al PER PHASE |
| | NEUTRAL | 1-2C, 2/0-500MCM Cu/Al PER SOURCE |
| | GROUND | 6C, #6-250MCM Cu/Al |

| GENERAL NOTES | |
|---|---|
| 1 | POWER SWITCHING DEVICES ARE MECHANICALLY INTERLOCKED SO THAT ONLY ONE DEVICE IS CLOSED AT A TIME |
| 2 | REFER COVER PAGE / SELECTED OPTION LIST FOR PROJECT SPECIFIC DETAILS |

2.5" x 5"

W1

**DANGER**
**PELIGRO**



**Arc Flash and Shock Hazard**
Will cause severe injury or death. More than one live circuit - see diagram. Disconnect all sources of supply before servicing. This equipment must be installed and serviced only by qualified electrical personnel utilizing safe work practices and appropriate Personal Protective Equipment (PPE). Failure to comply may result in injury or death! Refer to NFPA 70E for minimum PPE requirements.

**Risque d'Arc Electrique et d'Electrocution**
Peut causer des blessures graves oui la mort. Plus d'un circuit sous tension - voir schema. Couper toutes les sources d'alimentation avant de faire l'entretien et les réparations. Ce matériel doit être installé et entretenu uniquement par un électricien qualifié. Ce dernier doit connaitre les pratiques de travail sécuritaires et porter l'équipment de protection individuelle approprié. Le non respect mai entrainer des blessures ou la mort! Reportez-vous à NFPA 70E pour le manuel des exigences minimales PPE.

**Riesgo de Arco y Choque Eléctrico**
Se causarán lesiones graves o muerte. Más de un circuito energizado - ver diagrama. Desconectar todas las fuentes de suministro antes de hacer mantenimiento. Este equipo solo se debe instalar y mantener por personal calificado, usando medidas de seguridad y equipo de protección personal adecuados. No seguir estas recomendaciones puede causar lesiones o muerte! Consultar la NFPA 70E para los requisitos mínimos del equipo de protección personal (PPE)

QTY = 1

FOR REVIEW ONLY

DRAWINGS AND OR OTHER TECHNICAL INFORMATION SUPPLIED BY THOMSON POWER SYSTEMS AS A PART OF A SALE OF EQUIPMENT ARE FOR THE PURCHASER'S USE SOLELY IN CONJUNCTION WITH THAT EQUIPMENT, UNLESS SPECIFICALLY AGREED TO OTHERWISE AS A PART OF THE TERMS OF SALE.

☐ APPROVED FOR CONSTRUCTION
☐ MASTER COPY ☐ REFERENCE COPY ____ OF ____
☐ MULTIPLE UNIT WORK ORDER
☐ RELEASED FOR INFORMATION
AUTH. BY: _____ DATE: _____

CROSS REFERENCE LEGEND
50C-C-1
GRID COORDINATE
SHEET No.

| DRAWING No. | REFERENCE DRAWINGS |
|---|---|

| No. | REVISIONS | BY | AUTH | DATE |
|---|---|---|---|---|

THOMSON POWER SYSTEMS

# AUTOMATIC TRANSFER SWITCH
# MODEL TS 873A0400A1CN5BKKAA
# PHYSICAL LAYOUT & INSTALLATION DETAILS
IQALUIT WTP

| CUSTOMER | FRONTIER POWER PRODUCTS | | |
|---|---|---|---|
| CUSTOMER ORDER No. | C-058937 | WORK ORDER No. | W-102489 |
| DRAWN BY | NS | AUTH BY | OG |
| DATE | 18-06-12 | REV | 0 |
| DRAWING/FILE No. | W-102489-10A | SHEET | 10A |

© THE INFORMATION ON THIS DRAWING IS THE PROPERTY OF THOMSON POWER SYSTEMS. IT IS NOT TO BE USED DETRIMENTALLY TO OUR INTERESTS.

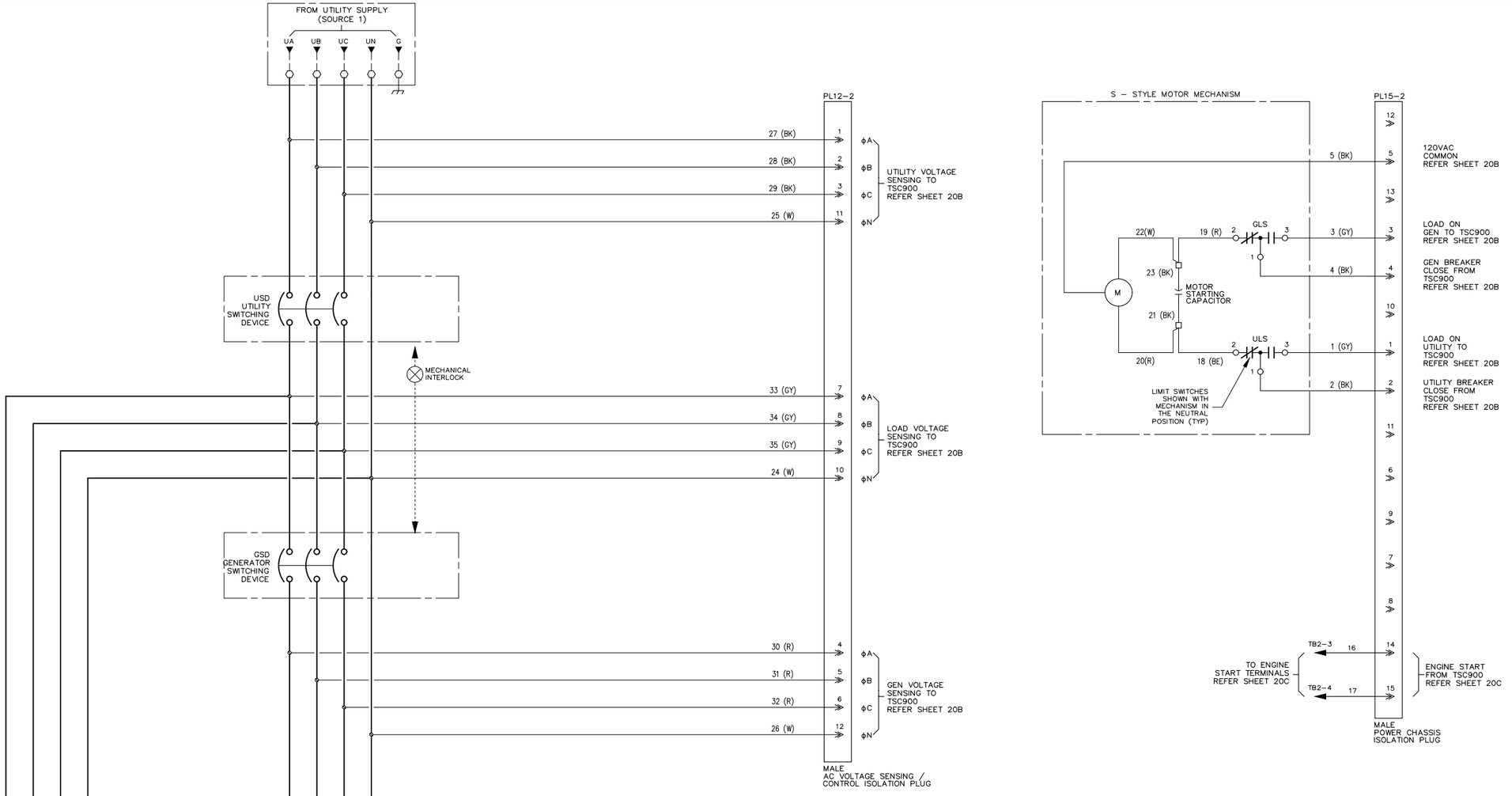


| COLOR KEY | |
|---|---|
| BK | BLACK |
| BE | BLUE |
| BN | BROWN |
| GN | GREEN |
| GY | GREY |
| OR | ORANGE |
| PE | PURPLE |
| R | RED |
| W | WHITE |
| Y | YELLOW |
| V | VIOLET |

| GENERAL NOTES | |
|---|---|
| 1 | COLOR CODE: ALL WIRING IS GREY UNLESS NOTED. SAFETY GROUND WIRES ARE GREEN |
| 2 | REFER COVER PAGE / SELECTED OPTION LIST FOR PROJECT SPECIFIC DETAILS |

☐ APPROVED FOR CONSTRUCTION
☐ MASTER COPY ☐ REFERENCE COPY ____ OF ____
☐ MULTIPLE UNIT WORK ORDER
☐ RELEASED FOR INFORMATION
AUTH. BY: _____ DATE: _____

CROSS REFERENCE LEGEND
50C-C-1
GRID COORDINATE
SHEET No.

| DRAWING No. | REFERENCE DRAWINGS |
|---|---|

| No. | REVISIONS | BY | AUTH | DATE |
|---|---|---|---|---|

THOMSON™ POWER SYSTEMS

# AUTOMATIC TRANSFER SWITCH
# MODEL TS 873A0400A1CN5BKKAA
# MCS AC SCHEMATIC
IQALUIT WTP

FOR REVIEW ONLY

DRAWINGS AND OR OTHER TECHNICAL INFORMATION SUPPLIED BY THOMSON POWER SYSTEMS AS A PART OF A SALE OF EQUIPMENT ARE FOR THE PURCHASER'S USE SOLELY IN CONJUNCTION WITH THAT EQUIPMENT, UNLESS SPECIFICALLY AGREED TO OTHERWISE AS A PART OF THE TERMS OF SALE.

| | | | |
|---|---|---|---|
| CUSTOMER FRONTIER POWER PRODUCTS | | | |
| CUSTOMER ORDER No. C-058937 | | WORK ORDER No. W-102489 | |
| DRAWN BY NS | AUTH BY OG | DATE 18-06-12 | REV 0 |
| DRAWING/FILE No. W-102489-20A | | SHEET 20A | |

© THE INFORMATION ON THIS DRAWING IS THE PROPERTY OF THOMSON POWER SYSTEMS. IT IS NOT TO BE USED DETRIMENTALLY TO OUR INTERESTS.

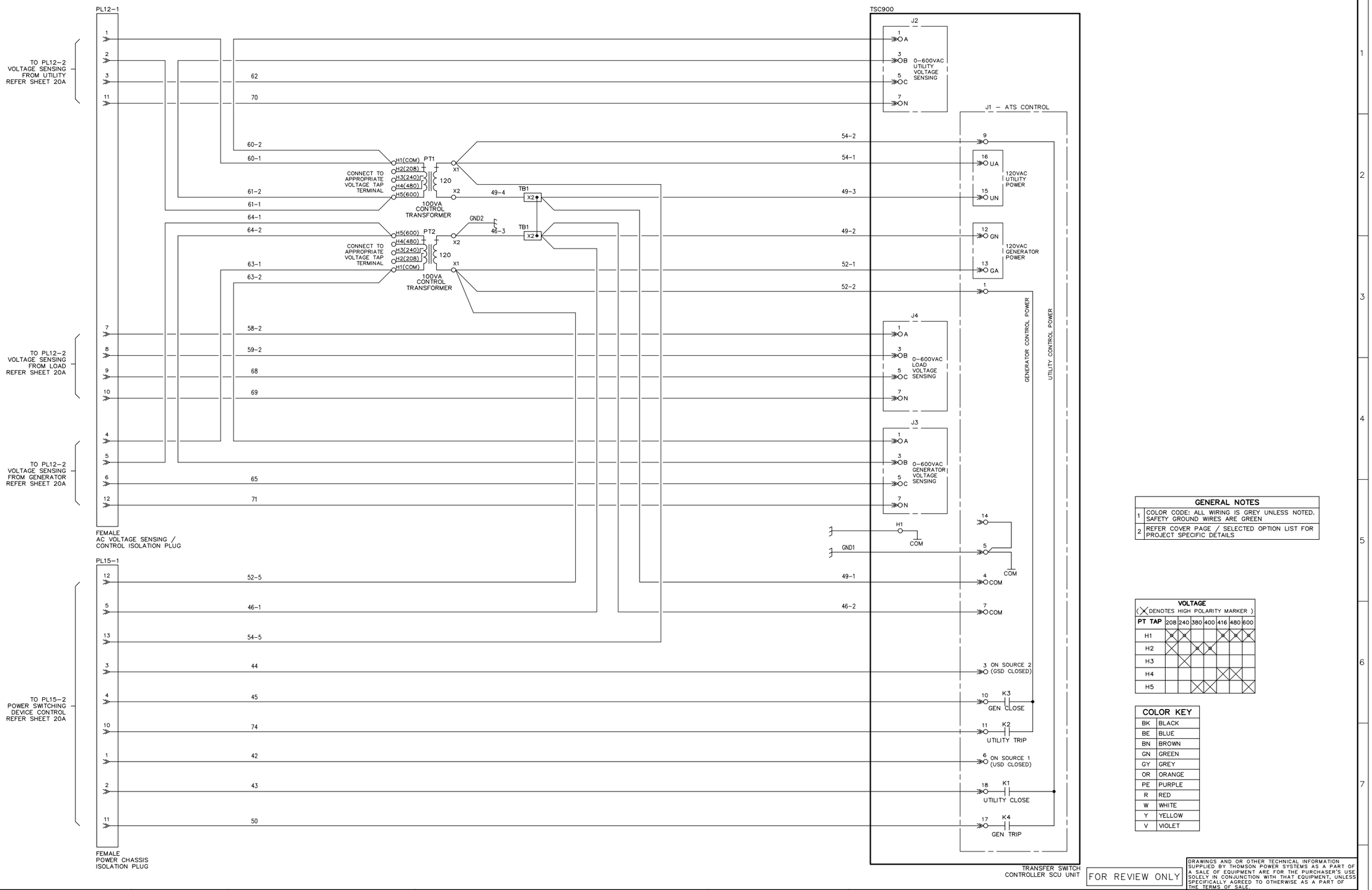


| GENERAL NOTES | |
|---|---|
| 1 | COLOR CODE: ALL WIRING IS GREY UNLESS NOTED. SAFETY GROUND WIRES ARE GREEN |
| 2 | REFER COVER PAGE / SELECTED OPTION LIST FOR PROJECT SPECIFIC DETAILS |

**VOLTAGE**
(X DENOTES HIGH POLARITY MARKER)

| PT TAP | 208 | 240 | 380 | 400 | 416 | 480 | 600 |
|---|---|---|---|---|---|---|---|
| H1 | X | X | | | X | X | X |
| H2 | X | | X | X | | | |
| H3 | | X | | | | | |
| H4 | | | | | X | X | |
| H5 | | | X | X | | | X |

| COLOR KEY | |
|---|---|
| BK | BLACK |
| BE | BLUE |
| BN | BROWN |
| GN | GREEN |
| GY | GREY |
| OR | ORANGE |
| PE | PURPLE |
| R | RED |
| W | WHITE |
| Y | YELLOW |
| V | VIOLET |

FOR REVIEW ONLY

DRAWINGS AND OR OTHER TECHNICAL INFORMATION SUPPLIED BY THOMSON POWER SYSTEMS AS A PART OF A SALE OF EQUIPMENT ARE FOR THE PURCHASER'S USE SOLELY IN CONJUNCTION WITH THAT EQUIPMENT, UNLESS SPECIFICALLY AGREED TO OTHERWISE AS A PART OF THE TERMS OF SALE.

☐ APPROVED FOR CONSTRUCTION
☐ MASTER COPY ☐ REFERENCE COPY ____ OF ____
☐ MULTIPLE UNIT WORK ORDER
☐ RELEASED FOR INFORMATION
AUTH. BY: _____ DATE: _____

CROSS REFERENCE LEGEND
50C-C-1
GRID COORDINATE
SHEET No.

| DRAWING No. | REFERENCE DRAWINGS |
|---|---|

| No. | REVISIONS | BY | AUTH | DATE |
|---|---|---|---|---|

THOMSON™ POWER SYSTEMS

# AUTOMATIC TRANSFER SWITCH MODEL TS 873A0400A1CN5BKKAA ATS AC CONTROL SCHEMATIC

IQALUIT WTP

CUSTOMER FRONTIER POWER PRODUCTS

| CUSTOMER ORDER No. | WORK ORDER No. |
|---|---|
| C-058937 | W-102489 |

| DRAWN BY | AUTH BY | DATE | REV |
|---|---|---|---|
| NS | OG | 18-06-12 | 0 |

| DRAWING/FILE No. | SHEET |
|---|---|
| W-102489-20B | 20B |

© THE INFORMATION ON THIS DRAWING IS THE PROPERTY OF THOMSON POWER SYSTEMS. IT IS NOT TO BE USED DETRIMENTALLY TO OUR INTERESTS.

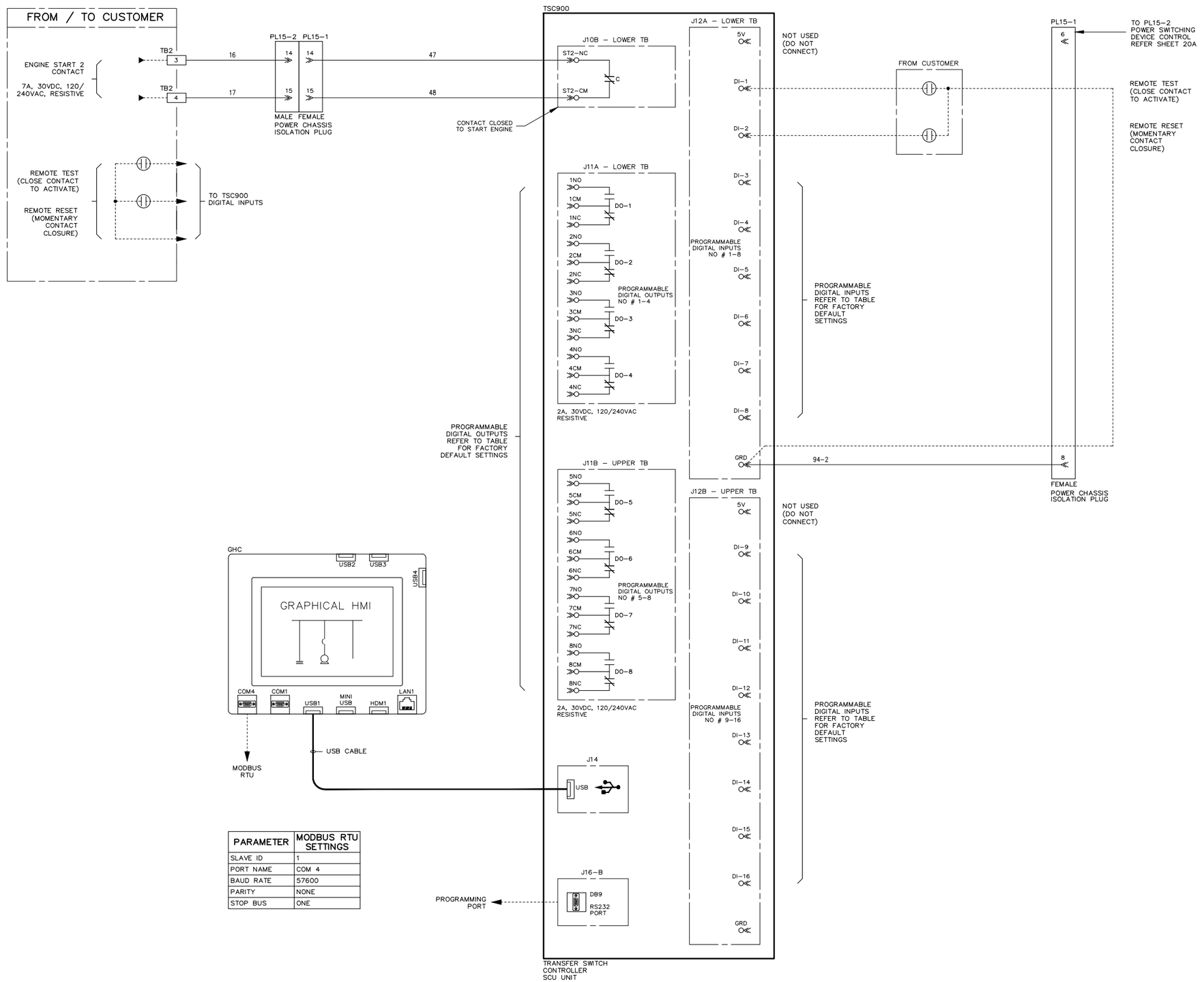


| PARAMETER | MODBUS RTU SETTINGS |
|---|---|
| SLAVE ID | 1 |
| PORT NAME | COM 4 |
| BAUD RATE | 57600 |
| PARITY | NONE |
| STOP BUS | ONE |

## TSC900 FACTORY DEFAULT SETTINGS

NOTE : REFER TO OPTION DRAWINGS FOR APPLICABLE CHANGES TO FACTORY DEFAULT SETTINGS

| PARAMETER | DEFAULT | RANGE |
|---|---|---|
| GENERATOR (SOURCE 2) START DELAY | 3 SEC | 0–60 SEC |
| GENERATOR (SOURCE 2) WARM UP DELAY | 2 SEC | 0–3600 SEC |
| GENERATOR (SOURCE 2) COOL DOWN DELAY | 300 SEC | 0–3600 SEC |
| UTILITY (SOURCE 1) RETURN DELAY | 300 SEC | 0–3600 SEC |
| TRANSFER NEUTRAL DELAY | 3 SEC | 0–120 SEC |
| TRANSFER FAIL DELAY | 30 SEC | 0–120 SEC |
| EXERCISE TIMER | PROG. | PROG. |
| GENERATOR (SOURCE 2) UNDER VOLTAGE DELAY | 3 SEC | 0–10 SEC |
| GENERATOR (SOURCE 2) UNDER FREQUENCY DELAY | 5 SEC | 0–10 SEC |
| GENERATOR (SOURCE 2) UNDER VOLTAGE PICK UP | 90% | 75–100% |
| GENERATOR (SOURCE 2) UNDER VOLTAGE DROP OUT | 85% | 70–95% |
| UTILITY (SOURCE 1) UNDER VOLTAGE DELAY | 1 SEC | 0–10 SEC |
| UTILITY (SOURCE 1) UNDER VOLTAGE PICK UP | 90% | 75–100% |
| UTILITY (SOURCE 1) UNDER VOLTAGE DROP OUT | 85% | 70–95% |

ALL SETTINGS ARE FIELD ADJUSTABLE UNLESS NOTED. REFER TO THE TSC900 MANUAL FOR A COMPLETE LISTING OF ALL TSC900 SETTINGS.

| GENERAL NOTES | |
|---|---|
| 1 | COLOR CODE: ALL WIRING IS GREY UNLESS NOTED. SAFETY GROUND WIRES ARE GREEN |
| 2 | REFER COVER PAGE / SELECTED OPTION LIST FOR PROJECT SPECIFIC DETAILS |

| COLOR KEY | |
|---|---|
| BK | BLACK |
| BE | BLUE |
| BN | BROWN |
| GN | GREEN |
| GY | GREY |
| OR | ORANGE |
| PE | PURPLE |
| R | RED |
| W | WHITE |
| Y | YELLOW |
| V | VIOLET |

☐ APPROVED FOR CONSTRUCTION
☐ MASTER COPY ☐ REFERENCE COPY ____ OF ____
☐ MULTIPLE UNIT WORK ORDER
☐ RELEASED FOR INFORMATION
AUTH. BY: _____ DATE: _____

CROSS REFERENCE LEGEND
SOC – C – 1
GRID COORDINATE
SHEET No.

| DRAWING No. | REFERENCE DRAWINGS |
|---|---|

| No. | REVISIONS | BY | AUTH | DATE |
|---|---|---|---|---|

THOMSON™ POWER SYSTEMS

AUTOMATIC TRANSFER SWITCH
MODEL TS 873A0400A1CN5BKKAA
ATS DC CONTROL SCHEMATIC
IQALUIT WTP

FOR REVIEW ONLY

DRAWINGS AND OR OTHER TECHNICAL INFORMATION SUPPLIED BY THOMSON POWER SYSTEMS AS A PART OF A SALE OF EQUIPMENT ARE FOR THE PURCHASER'S USE SOLELY IN CONJUNCTION WITH THAT EQUIPMENT, UNLESS SPECIFICALLY AGREED TO OTHERWISE AS A PART OF THE TERMS OF SALE.

| | |
|---|---|
| CUSTOMER | FRONTIER POWER PRODUCTS |
| CUSTOMER ORDER No. | C–058937 |
| WORK ORDER No. | W–102489 |
| DRAWN BY | NS |
| AUTH BY | OG |
| DATE | 18–06–12 |
| REV | 0 |
| DRAWING/FILE No. | W–102489–20C |
| SHEET | 20C |

© THE INFORMATION ON THIS DRAWING IS THE PROPERTY OF THOMSON POWER SYSTEMS. IT IS NOT TO BE USED DETRIMENTALLY TO OUR INTERESTS.

# ☒ CTK0400A OPTION

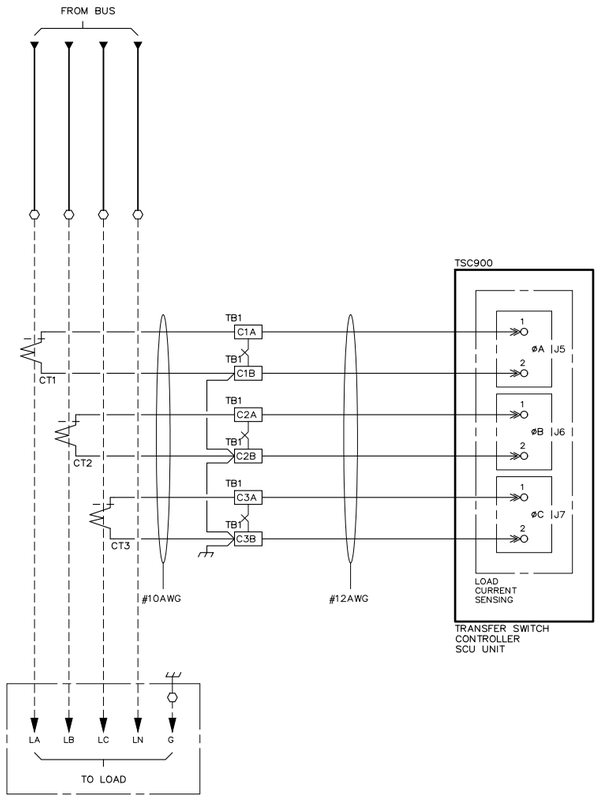


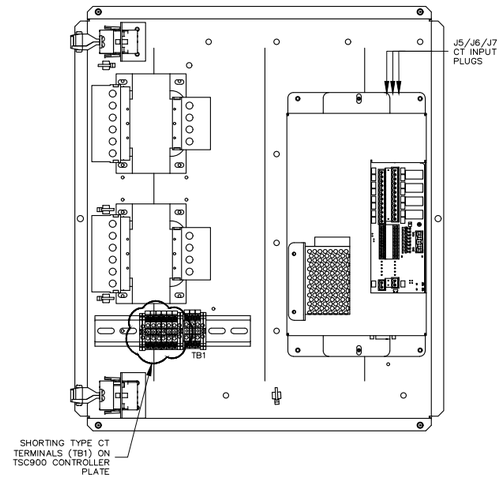


ATS CONTROL PLATE

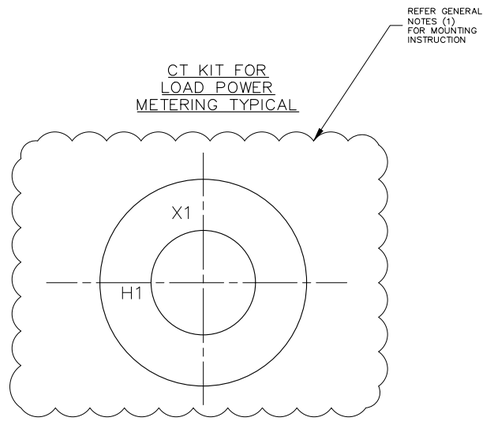


| PART ID | OPTION KITS |
|---|---|
| CTK0100 | 100 AMPS |
| CTK0150 | 150 AMPS |
| CTK0250 | 200–250 AMPS |
| CTK0400 | 400 AMPS |
| CTK0600 | 600 AMPS |
| CTK0800 | 800 AMPS |
| CTK1200 | 1000–1200 AMPS |
| CTK1600 | 1600 AMPS |
| CTK2000 | 2000 AMPS |

| GENERAL NOTES | |
|---|---|
| 1 | CT'S TO BE MOUNTED ON THE LOAD SIDE OF THE ATS. CUSTOMER TO VERIFY POLARITY BEFORE CONNECTING THE CT SECONDARIES TO THE TRANSFER SWITCH CONTROLLER. |
| 2 | ATS CONTROL PLATE MOUNTED ON THE BACK SIDE OF DOOR FOR MCS / MOS AND FOR ICS MOUNTED ON THE BACKPAN. |
| 3 | REFER COVER PAGE / SELECTED OPTION LIST FOR PROJECT SPECIFIC DETAILS |

| BILL OF MATERIALS FOR CABLE HARNESS | | |
|---|---|---|
| PART DESCRIPTION | PART ID | QTY |
| WIRE, 18AWG, GREY, TINNED, TEW, 600V, | 002027 | 600 INCHES |
| TERM. BLK, RAIL MNT, 40A, 600V, WK4/U, | 001861 | 6 |
| TERM. BLK, ENDPLATE, WK 2.5–4/U, | 001872 | 1 |
| SCREW, SHT–MTL, RDH, ROB #6 X 5/8" | 002070 | 2 |
| MTG–RAIL, TYPE–35, SLOTTED(7.5X2–METERS) | 002795 | 6 |
| TERM. BLK, PARTITION PLATE, WK2.5–4/U, | 004189 | 2 |
| CONN, MINI–FIT, J, 94V–2, 2X1–WAY,FEMALE (J5/J6/J7) | 012654 | 3 |
| CONN, FEMALE CRIMP, MINI–FIT, JR, SERIES | 010954 | 6 |
| WIRE SLEEVE, 0.5", EXPANDO PT PLUS, | 000456 | 175 INCHES |
| TERM BLK CROSS CONN.W SCRW WK4/U SR7 | 009677 | 3 |
| TERM. BLK, EARTH TERMINAL, 10–24 AWG | 005211 | 2 |

FOR REVIEW ONLY

DRAWINGS AND OR OTHER TECHNICAL INFORMATION SUPPLIED BY THOMSON POWER SYSTEMS AS A PART OF A SALE OF EQUIPMENT ARE FOR THE PURCHASER'S USE SOLELY IN CONJUNCTION WITH THAT EQUIPMENT, UNLESS SPECIFICALLY AGREED TO OTHERWISE AS A PART OF THE TERMS OF SALE.

☐ APPROVED FOR CONSTRUCTION
☐ MASTER COPY ☐ REFERENCE COPY ____ OF ____
☐ MULTIPLE UNIT WORK ORDER
☐ RELEASED FOR INFORMATION
AUTH. BY: _____ DATE: _____

CROSS REFERENCE LEGEND
50C–C–1
GRID COORDINATE
SHEET No.

| DRAWING No. | REFERENCE DRAWINGS |
|---|---|

| No. | REVISIONS | BY | AUTH | DATE |
|---|---|---|---|---|

THOMSON™ POWER SYSTEMS

AUTOMATIC TRANSFER SWITCH
MODEL TS 873A0400A1CN5BKKAA
STANDARD OPTION SCHEMATIC – CTKIT0400A
IQALUIT WTP

CUSTOMER FRONTIER POWER PRODUCTS

| CUSTOMER ORDER No. | WORK ORDER No. | | |
|---|---|---|---|
| C–058937 | W–102489 | | |
| DRAWN BY | AUTH BY | DATE | REV |
| NS | OG | 18–06–12 | 0 |
| DRAWING/FILE No. | | SHEET | |
| W–102489–30A | | 30A | |

© THE INFORMATION ON THIS DRAWING IS THE PROPERTY OF THOMSON POWER SYSTEMS. IT IS NOT TO BE USED DETRIMENTALLY TO OUR INTERESTS.

# ☒ PPR–10 OPTION

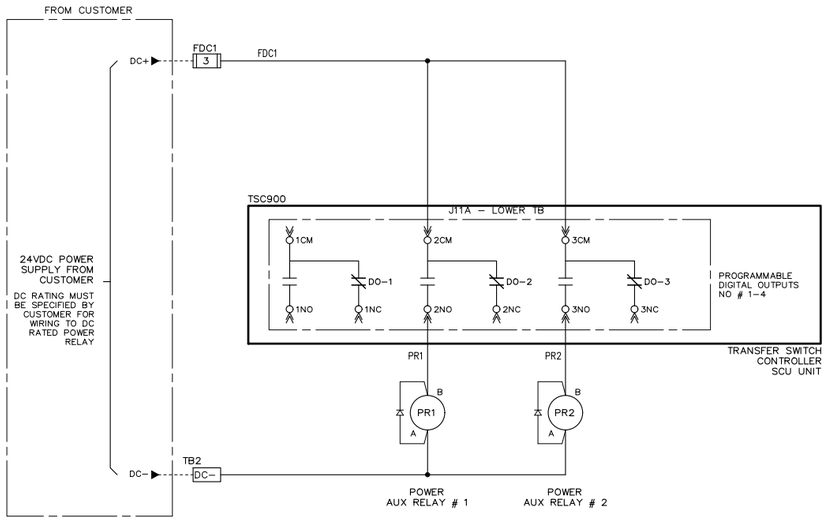


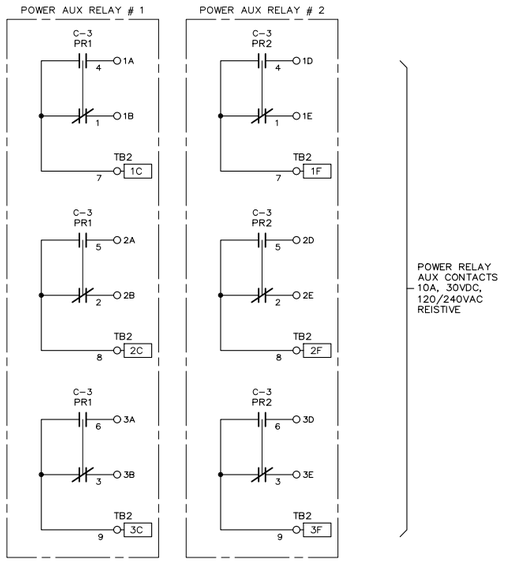


| PR1 | | | |
|---|---|---|---|
| T1 | TYPE | T2 | REF |
| 4 | NO | 7 | A–5 |
| 1 | NC | | |
| 5 | NO | 8 | A–6 |
| 2 | NC | | |
| 6 | NO | 9 | A–7 |
| 3 | NC | | |

| PR2 | | | |
|---|---|---|---|
| T1 | TYPE | T2 | REF |
| 4 | NO | 7 | B–5 |
| 1 | NC | | |
| 5 | NO | 8 | B–6 |
| 2 | NC | | |
| 6 | NO | 9 | B–7 |
| 3 | NC | | |

| PPR–10 OPTION NOTES | |
|---|---|
| 1 | FOR POWER RELAY FUNCTIONAL DESCRIPTION REFER TO FACTORY DEFAULT DIGITAL OUTPUT FUNCTION TABLE ON ATS DC CONTROL SCHEMATIC |
| 2 | THE NUMBER OF RELAYS SUPPLIED WILL BE PER ORDERED QUANTITY |
| 3 | CUSTOMER TO WIRE DIRECTLY TO RELAY TERMINALS |
| 4 | SPECIFIED QUANTITY OF PROGRAMMABLE POWER RELAYS ARE WIRED FOR CUSTOMER AS PER OPTION LIST |
| 5 | DC SUPPLY FOR THE RELAYS, BY DEFAULT IS 24VDC. PLEASE SPECIFY THE VOLTAGE RATING OTHER THAN 24VDC ON OPTION LIST |

| BILL OF MATERIALS | | |
|---|---|---|
| PART DESCRIPTION | PART ID | QTY |
| RELAY, 24VDC COIL, 11 PIN SQ., /W LED | 004095 | 2 |
| RELAY SOCKET, 11 PIN, SQ., RAIL MOUNT | 000399 | 2 |
| FUSE HOLDER, 1P, 30A, 600V, 200KA, CC | 002374 | 1 |
| FUSE, 3A, 600VAC, CLASS CC | 003633 | 1 |
| TERM. BLK, RAIL MNT, 40A, 600V, WK4/U, | 001861 | 10 |

| GENERAL NOTES | |
|---|---|
| 1 | FOR MCS/MOS/PCS TYPE ATS, MOUNT THE RELAYS ON SIDE COVER WHERE SPACE PERMITS |
| 2 | REFER COVER PAGE / SELECTED OPTION LIST FOR PROJECT SPECIFIC DETAILS |

PPR RELAY
[TYPICAL]

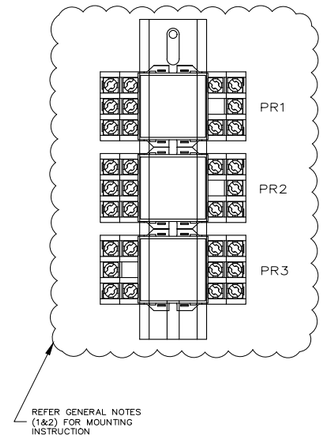


FOR REVIEW ONLY

☐ APPROVED FOR CONSTRUCTION
☐ MASTER COPY ☐ REFERENCE COPY ____ OF ____
☐ MULTIPLE UNIT WORK ORDER
☐ RELEASED FOR INFORMATION
AUTH. BY: _____ DATE: _____

CROSS REFERENCE LEGEND
5OC–C–1
GRID COORDINATE
SHEET No.

| DRAWING No. | REFERENCE DRAWINGS |
|---|---|

| No. | REVISIONS | BY | AUTH | DATE |
|---|---|---|---|---|

THOMSON™ POWER SYSTEMS

AUTOMATIC TRANSFER SWITCH
MODEL TS 873A0400A1CN5BKKAA
STANDARD OPTION SCHEMATIC – PPR–10
IQALUIT WTP

DRAWINGS AND OR OTHER TECHNICAL INFORMATION SUPPLIED BY THOMSON POWER SYSTEMS AS A PART OF A SALE OF EQUIPMENT ARE FOR THE PURCHASER'S USE SOLELY IN CONJUNCTION WITH THAT EQUIPMENT, UNLESS SPECIFICALLY AGREED TO OTHERWISE AS A PART OF THE TERMS OF SALE.

| | |
|---|---|
| CUSTOMER | FRONTIER POWER PRODUCTS |
| CUSTOMER ORDER No. | C–058937 |
| WORK ORDER No. | W–102489 |
| DRAWN BY | NS |
| AUTH BY | OG |
| DATE | 18–06–12 |
| REV | 0 |
| DRAWING/FILE No. | W–102489–30B |
| SHEET | 30B |

© THE INFORMATION ON THIS DRAWING IS THE PROPERTY OF THOMSON POWER SYSTEMS. IT IS NOT TO BE USED DETRIMENTALLY TO OUR INTERESTS.

**Date: Jul 4, 2018**

REVIEWED BY CONTRACTOR
Kudlik Construction Ltd.
NAME: Sandra Rousseau P.Eng
DATE: Jul 04, 2018

# Transmittal

**Arctic Electrical Nunavut Ltd**
PO Box 1381
Iqaluit, Nu.
X0A 0H0
Phone: 867-975-3494
**From: Lee Pitcher**

**Project** **Waste Wate Treatment Plant**
**Location** Iqaluit NU
**To** Kudlik Construction
Contact: Sandra Rousseau P.Eng.
srousseau@kudlik.biz



SE-06
PO-P18-120

Attached are the following items:

- [x] Drawings
- [ ] Prints
- [ ] Plans
- [x] Specifications
- [ ] Information
- [ ] Submittals

Other:

THESE ARE TRANSMITTED FOR:

- [ ] Prior Approval
- [x] Approval
- [ ] Approval as Submitted
- [ ] Approval as Noted
- [ ] Resubmittal for Approval
- [ ] Corrections
- [ ] Your Use
- [ ] Review and Comment
- [ ] Record

Bids due on:
Other:

| Qty | Type | MFG | Part |
|---|---|---|---|

Drawing E-601-Automatic Transfer Switch #2

Contractor to review and confirm this is meant to be E-603, Final SLD

STANTEC PROJECT #: 110126045
SUBMITTAL # ELE-006

This review by Stantec is for general conformance with the design concept of Stantec's design of the:

- [ ] Architectural
- [ ] Structural
- [ ] Mechanical
- [x] Electrical
- [ ] Other

Stantec

- [ ] REVIEWED
- [x] REVIEWED, AS NOTED
- [ ] REVISE AND RESUBMIT
- [ ] NOT REVIEWED

DATE 2018-07-10
BY Konrad Goluch

component(s) only and does not mean that Stantec has verified or approves the shop drawing(s). The Contractor remains solely responsible for the shop drawing(s) and this review by Stantec does not relieve the Contractor of the Contractor's responsibility for errors or omissions in the shop drawing(s) or for meeting all requirements of the contract documents. This review does not mean that Stantec approves the detailed design inherent in the shop drawing, responsibility for which shall remain with the Contractor submitting same, nor does this review mean that Stantec accepts any deviation of the shop drawing(s) from the contract documents. The Contractor is responsible for confirming all dimensions and correlating them at the job site, for all construction means, methods and techniques, and for coordination of construction work of all trades, including coordination of all shop drawings.

Provide 4-position switch as per specification 26 36 23 2.3 .1

**Notes:**
Please review the attached approval drawings carefully. Production cannot be scheduled until a signed copy of the final approved drawing are received. Be aware that once drawings are approved, any errors due to incorrect information are the responsibility of the client.

Responsibility lies with the contractor as per the Contract.

Do not hesitate to contact me if you have any questions or concerns.

THOMSON™
POWER SYSTEMS

# Approval Drawings

**Project Name/Reference:** IQALUIT WTP

**Customer:** FRONTIER POWER PRODUCTS

**Thomson Customer Order:** C-058937/1 Rev# 0

**WorkOrder/Serial Number:** W-102488

**Model Number** TS 873B0400A1CN5BKKAA

**Attached Drawings:**

| | | | |
|---|---|---|---|
| Physical Drawing | MBS870M136 | Rev# | 0 |
| AC Schematic | MBS870E100 | Rev# | 4 |
| AC Control Schematic | TSC900E100 | Rev# | 4 |
| DC Control Schematic | TSC900E101 | Rev# | 4 |

**Option Drawings:**

| | | | |
|---|---|---|---|
| STANDARD OPTION SCHEMATIC - PPR-10 | TSC900E300 | Rev# | 3 |
| STANDARD OPTION SCHEMATIC - CTKXXXX | TSC900E304 | Rev# | 3 |
| STANDARD OPTION SCHEMATIC - BYPASS AUX | TSC900E352 | Rev# | 3 |

**Features/Ratings:**

| | |
|---|---|
| Amperage: | 400A |
| Voltage: | 347 - 600V 3 Phase (4 Wire) |
| Poles: | 3POLE |
| Frequency: | 60HZ |
| Configuration | Double Side Bypass |
| Application | Standard ATS |
| Operation | Open Transition Transfer |
| Enclosure Type | NEMA 2 Enclosure |
| ATS Controller | TSC900 |

| | |
|---|---|
| Utility (or Source 1) Switching Device: | Moulded Case Switch |
| Generator (or Source 2) Switching Device: | Moulded Case Switch |
| Approval Standard: | CSA C22.2 No. 178/ UL1008 -non SE ATS |

**System Options:**

| | |
|---|---|
| CTK0400 | 400A Current Tranformer Kit |
| LPM | Transfer Switch Load Power Metering CT K |
| PPR-10 | Programmable Power Relay c/w 10A Form C |
| AUX-BG | Bypass Auxiliary Contact - Generator Side |
| AUX-BU | Bypass Auxiliary Contact - Utility Side |

**ATTACHED DOCUMENTS ARE DRAFT FOR REVIEW ONLY AND ARE SUBJECT TO CHANGE WITHOUT NOTICE.**

DRAWINGS AND OR OTHER TECHNICAL INFORMATION SUPPLIED BY THOMSON POWER SYSTEMS AS A PART OF A SALE ARE FOR THE PURCHASER'S USE SOLELY IN CONJUNCTION WITH THAT EQUIPMENT, UNLESS SPECIFICALLY AGREED TO OTHERWISE AS A PART OF THE STANDARD TERMS AND CONDITIONS.

THE INFORMATION CONTAINED IN THESE DRAWINGS IS THE PROPERTY OF THOMSON POWER SYSTEMS, IT IS NOT TO BE USED DETRIMENTALLY TO OUR INTERESTS.

NOTE:
ANY PROGRAM SETTINGS SHOWN REFLECT FACTORY DEFAULT SETTINGS ONLY. FINAL SETTINGS WILL BE REQUIRED TO BE SET BY THE COMMISSIONING AUTHORITY. FAILURE TO DO SO MAY RESULT IN EQUIPMENT FAILURE.

## SHOP DRAWING / SUBMITTAL REVIEW

☐ APPROVED ☐ APPROVED WITH CHANGES NOTED

☐ REVISE AND RESUBMIT ☐ REJECTED _____

SUBMITTAL WAS RECEIVED FOR DESIGN CONFORMITY AND GENERAL CONFORMANCE TO CONTRACT DOCUMENTS ONLY. THE CONTRACTOR FOR CONFIRMING AND CORRELATING DIMENSIONS AT JOB SITES FOR TOLERANCES, CLEARANCES, QUANTITIES, FABRICATION PROCESSES AND TECHNIQUES OF CONSTRUCTION, COORDINATION OF HIS WORK WITH OTHER TRADES AND FULL COMPLIANCE WITH CONTRACT

BY _____ DATE _____

COMPANY NAME _____

CITY _____ STATE/PROV _____



9087A - 198th Street, Langley, BC Canada V1M 3B1
Email: info@thomsonps.com www.thomsonps.com

REGAL®

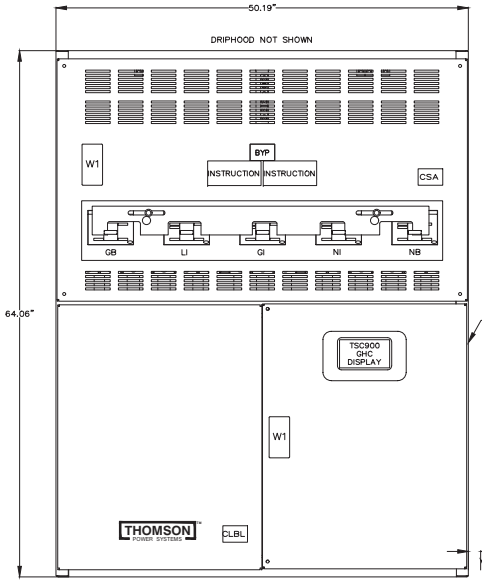


FRONT VIEW

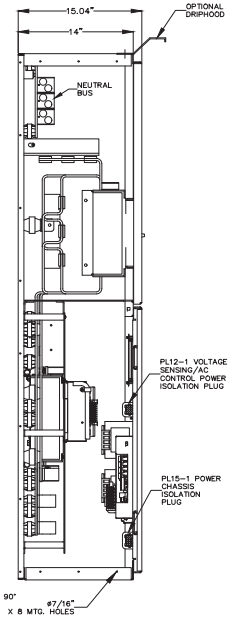


LHS VIEW
(SIDE COVER REMOVED)

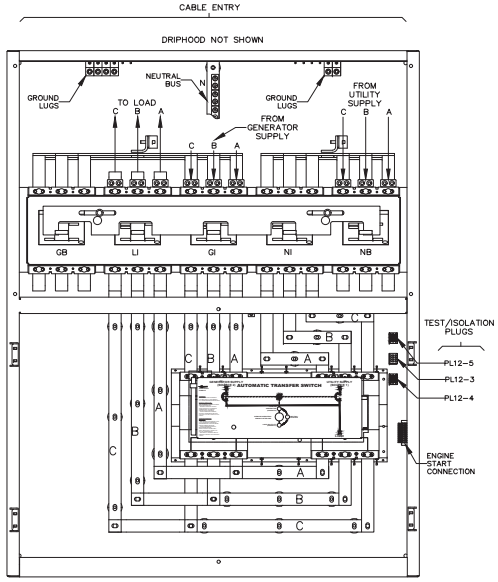


INTERIOR FRONT VIEW
(DOOR NOT SHOWN)

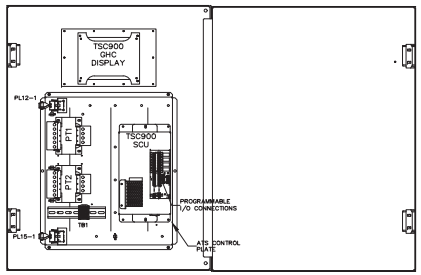


VIEWED FROM REAR OF DOOR
(INSIDE OF ATS SECTION)

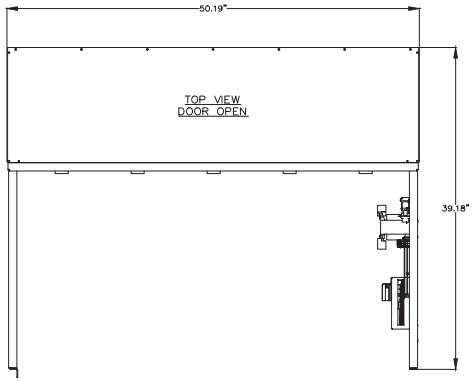


| BASIC MODEL TS87xA | STANDARD ATS | | | | |
|---|---|---|---|---|---|
| | CLOSING AND WITHSTAND RATING AVAILABLE AMPS (RMS) CLOSING & WITHSTAND RATINGS SHOWN ARE ONLY FOR ATS UTILITY AND/OR GENERATOR POWER SWITCHING DEVICE(S) THAT ARE NOT FACTORY SUPPLIED WITH INTEGRAL OVERCURRENT PROTECTION. PLEASE REFER TO PRODUCT INSTRUCTION MANUAL FOR FURTHER INFORMATION ON UPSTREAM PROTECTION REQUIREMENT. | | | | |
| | MAX. VOLTAGE | RATED CURRENT (A) | @240V | @480V | @600V |
| TS 87xA-400 | 600 | 400 | 65,000 | 50,000 | 35,000 |

| SHORT CIRCUIT CURRENT RATING–BYPASS SECTION | | | | |
|---|---|---|---|---|
| SHORT CIRCUIT CURRENT RATINGS – MCS STYLE (ABB) 3, 4 & 5–BREAKER SLIDEBAR INTERLOCKED "CANADIAN" BYPASS LOWEST KA RATINGS APPLICABLE TO MCS'S & MCCB'S THAT ARE USED IN BYPASSES (CERTIFIED TO CSA #31) | | | | |
| ATS RATING (AMPS) | BYPASS BREAKER FRAME (ABB) | @240V | @480V | @600V |
| 400 | T6H | 65,000 | 50,000 | 35,000 |

| CONNECTION DATA | | |
|---|---|---|
| 400A ATS | UTILITY (SRC1) | 1–2C, 2/0–500MCM Cu/Al PER PHASE |
| | GENERATOR (SRC2) | 1–2C, 2/0–500MCM Cu/Al PER PHASE |
| | LOAD | 1–2C, 2/0–500MCM Cu/Al PER PHASE |
| | NEUTRAL | 1–2C, 2/0–500MCM Cu/Al PER SOURCE |
| | GROUND | 6C, #6–250MCM Cu/Al |

| GENERAL NOTES | |
|---|---|
| 1 | POWER SWITCHING DEVICES ARE MECHANICALLY INTERLOCKED SO THAT ONLY ONE DEVICE IS CLOSED AT A TIME |
| 2 | BYPASS SWITCHING DEVICES ARE MECHANICALLY INTERLOCKED THROUGH A SLIDE BAR INTERLOCK. BYPASS IS CLOSED TRANSITION. REFER BELOW CHART |
| 3 | NEMA 2 ENCLOSURE C/W DRIPHOOD |
| 4 | NEMA 12 ENCLOSURE C/W GASKETING |
| 5 | FOR 1 PHASE, 3 WIRE SOLID NEUTRAL APPLICATION, CONNECT PHASE TO 'A' & 'B'. OMIT 'C' |
| 6 | FOR 1 PHASE, 3 WIRE SWITCHED NEUTRAL APPLICATION, CONNECT PHASE TO 'A' & 'B'. CONNECT NEUTRAL TO 'C' |
| 7 | REFER COVER PAGE / SELECTED OPTION LIST FOR PROJECT SPECIFIC DETAILS |

2.5" x 5"

W1

**DANGER**
**PELIGRO**



**Arc Flash and Shock Hazard**
Will cause severe injury or death. Wire than one live circuit - see diagram. Disconnect all sources of supply before servicing. This equipment must be installed and serviced only by qualified electrical personnel utilizing safe work practices and appropriate Personal Protective Equipment (PPE). Failure to comply may result in injury or death! Refer to NFPA 70E for minimum PPE requirements.

**Risque d'Arc Electrique et d'Electrocution**
Peut causer des blessures graves ou la mort. Plus d'un circuit sous tension - voir schema. Couper toutes les sources d'alimentation avant de faire lentretien et les reparations. Ce materiel doit etre installé et entretenu uniquement par un electricien qualifié. Ce dernier doit connaitre les pratiques de travail sécuritaires et porter l'équipment de protection individuelle approprié. Le non respect mai entrainer des blessures ou la mort! Reportez-vous a NFPA 70E pour le manuel des exigences minimales PPE.

**Riesgo de Arco y Choque Eléctrico**
Se causarán lesiones graves o muerte. Más de un circuito energizado - ver diagrama. Desconectar todas las fuentes de suministro antes de hacer mantenimiento. Este equipo solo se debe instalar y mantener por personal calificado, usando medidas de seguridad y equipo de protección personal adecuados. No seguir estas recomendaciones puede causar lesiones o muerte! Consultar la NFPA 70E para los requisitos mínimos del equipo de protección personal (PPE).

QTY = 1

| SWITCHING DEVICE | INTERLOCK POSITION | | | | |
|---|---|---|---|---|---|
| | UTILITY BYPASS | TRANSITION INTERLOCKING | | | GENERATOR BYPASS |
| | 1 | 2 | 3 | 4 | 5 |
| NB | ⊠ | ⊠ | | | |
| NI | | ⊠ | ⊠ | | |
| LI | | ⊠ | ⊠ | ⊠ | |
| GI | | | ⊠ | ⊠ | |
| GB | | | | ⊠ | ⊠ |

BYPASS SLIDE BAR INTERLOCK

⊠ = SWITCH CLOSURE ALLOWED

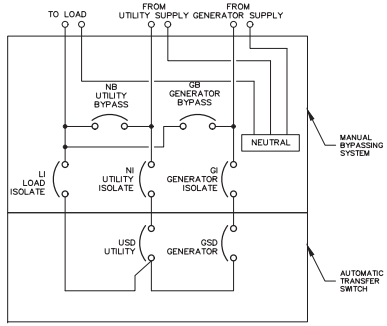


SINGLE LINE DIAGRAM

FOR REVIEW ONLY

☐ APPROVED FOR CONSTRUCTION
☐ MASTER COPY ☐ REFERENCE COPY ____ OF ____
☐ MULTIPLE UNIT WORK ORDER
☐ RELEASED FOR INFORMATION
AUTH. BY: _____ DATE: _____

CROSS REFERENCE LEGEND
5OC–C–1
GRID COORDINATE
SHEET No.

| DRAWING No. | REFERENCE DRAWINGS |
|---|---|

| No. | REVISIONS | BY | AUTH | DATE |
|---|---|---|---|---|
| 1 | GENERAL NOTES AND LOGO UPDATED | AP | OG | 17–10–24 |

THOMSON POWER SYSTEMS

# AUTOMATIC TRANSFER SWITCH
## MODEL TS 870
## PHYSICAL LAYOUT & INSTALLATION DETAILS
400A, 2P/3P, NEMA 1/2/12 SD, MCS DOUBLE BYPASS, STD

DRAWINGS AND OR OTHER TECHNICAL INFORMATION SUPPLIED BY THOMSON POWER SYSTEMS AS A PART OF A SALE OF EQUIPMENT ARE FOR THE PURCHASER'S USE SOLELY IN CONJUNCTION WITH THAT EQUIPMENT, UNLESS SPECIFICALLY AGREED TO OTHERWISE AS A PART OF THE TERMS OF SALE.

| CUSTOMER | THOMSON POWER SYSTEMS | | |
|---|---|---|---|
| CUSTOMER ORDER No. | WORK ORDER No. | | |
| C–XXXXX | W–XXXXX | | |
| DRAWN BY | AUTH BY | DATE | REV |
| AP | OG | 16–01–26 | 1 |
| DRAWING/FILE No. | | SHEET | |
| MBS870M136 | | 10A | |

© THE INFORMATION ON THIS DRAWING IS THE PROPERTY OF THOMSON POWER SYSTEMS. IT IS NOT TO BE USED DETRIMENTALLY TO OUR INTERESTS.

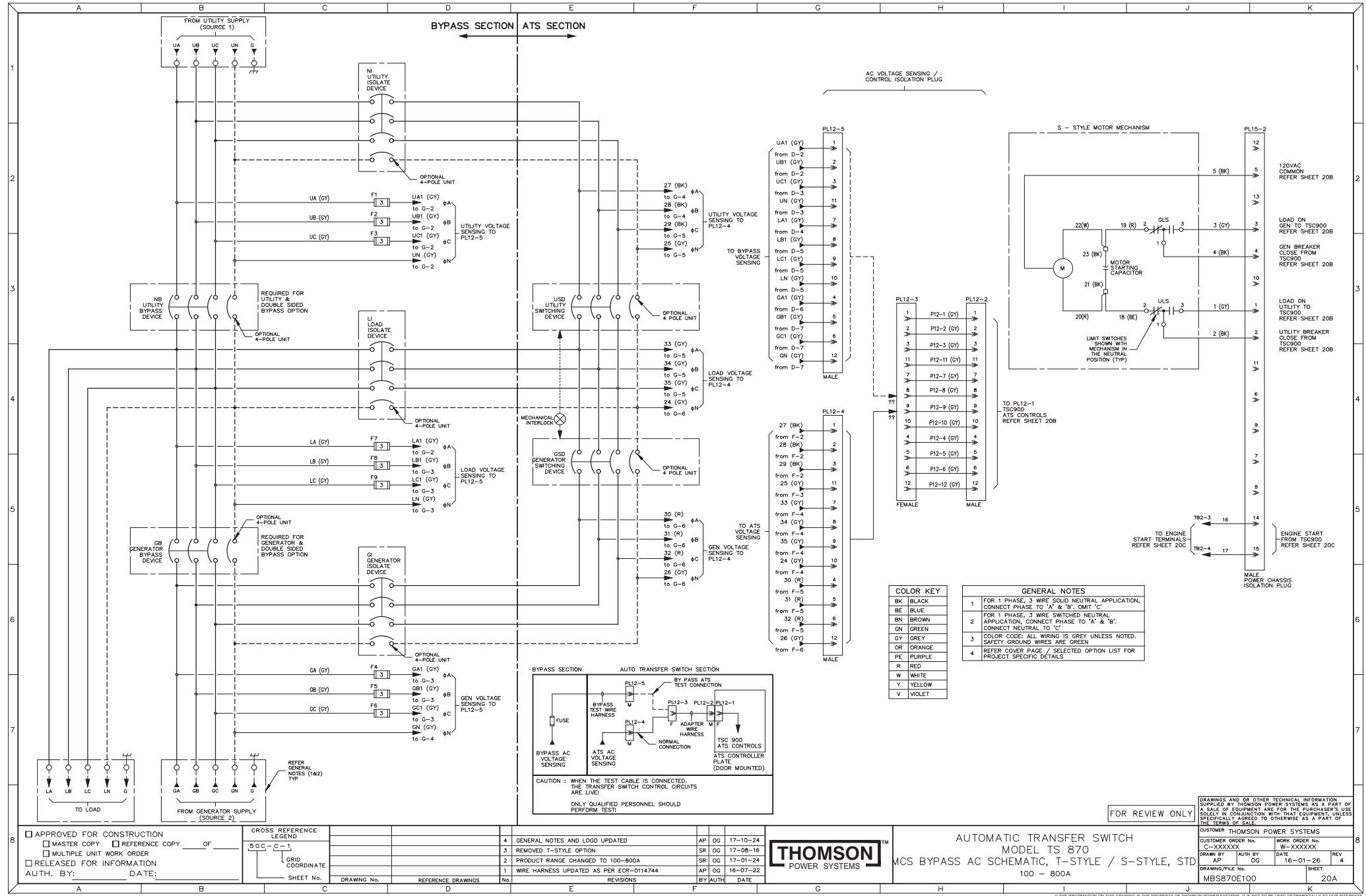


| COLOR KEY | |
|---|---|
| BK | BLACK |
| BE | BLUE |
| BN | BROWN |
| GN | GREEN |
| GY | GREY |
| OR | ORANGE |
| PE | PURPLE |
| R | RED |
| W | WHITE |
| Y | YELLOW |
| V | VIOLET |

| GENERAL NOTES | |
|---|---|
| 1 | FOR 1 PHASE, 3 WIRE SOLID NEUTRAL APPLICATION, CONNECT PHASE TO 'A' & 'B'. OMIT 'C' |
| 2 | FOR 1 PHASE, 3 WIRE SWITCHED NEUTRAL APPLICATION, CONNECT PHASE TO 'A' & 'B'. CONNECT NEUTRAL TO 'C' |
| 3 | COLOR CODE: ALL WIRING IS GREY UNLESS NOTED. SAFETY GROUND WIRES ARE GREEN |
| 4 | REFER COVER PAGE / SELECTED OPTION LIST FOR PROJECT SPECIFIC DETAILS |

FOR REVIEW ONLY

☐ APPROVED FOR CONSTRUCTION
☐ MASTER COPY ☐ REFERENCE COPY ____ OF ____
☐ MULTIPLE UNIT WORK ORDER
☐ RELEASED FOR INFORMATION
AUTH. BY: _____ DATE: _____

CROSS REFERENCE LEGEND
5 0 C – C – 1
GRID COORDINATE
SHEET No.

DRAWING No. | REFERENCE DRAWINGS

| No. | REVISIONS | BY | AUTH | DATE |
|---|---|---|---|---|
| 4 | GENERAL NOTES AND LOGO UPDATED | AP | OG | 17–10–24 |
| 3 | REMOVED T–STYLE OPTION | SR | OG | 17–08–16 |
| 2 | PRODUCT RANGE CHANGED TO 100–800A | SR | OG | 17–01–24 |
| 1 | WIRE HARNESS UPDATED AS PER ECR–0114744 | AP | OG | 16–07–22 |

THOMSON POWER SYSTEMS

AUTOMATIC TRANSFER SWITCH
MODEL TS 870
MCS BYPASS AC SCHEMATIC, T–STYLE / S–STYLE, STD
100 – 800A

DRAWINGS AND OR OTHER TECHNICAL INFORMATION SUPPLIED BY THOMSON POWER SYSTEMS AS A PART OF A SALE OF EQUIPMENT ARE FOR THE PURCHASER'S USE SOLELY IN CONJUNCTION WITH THAT EQUIPMENT, UNLESS SPECIFICALLY AGREED TO OTHERWISE AS A PART OF THE TERMS OF SALE.

CUSTOMER THOMSON POWER SYSTEMS
CUSTOMER ORDER No. C–XXXXXX
WORK ORDER No. W–XXXXXX
DRAWN BY AP | AUTH BY OG | DATE 16–01–26 | REV 4
DRAWING/FILE No. MBS870E100
SHEET 20A

© THE INFORMATION ON THIS DRAWING IS THE PROPERTY OF THOMSON POWER SYSTEMS. IT IS NOT TO BE USED DETRIMENTALLY TO OUR INTERESTS.

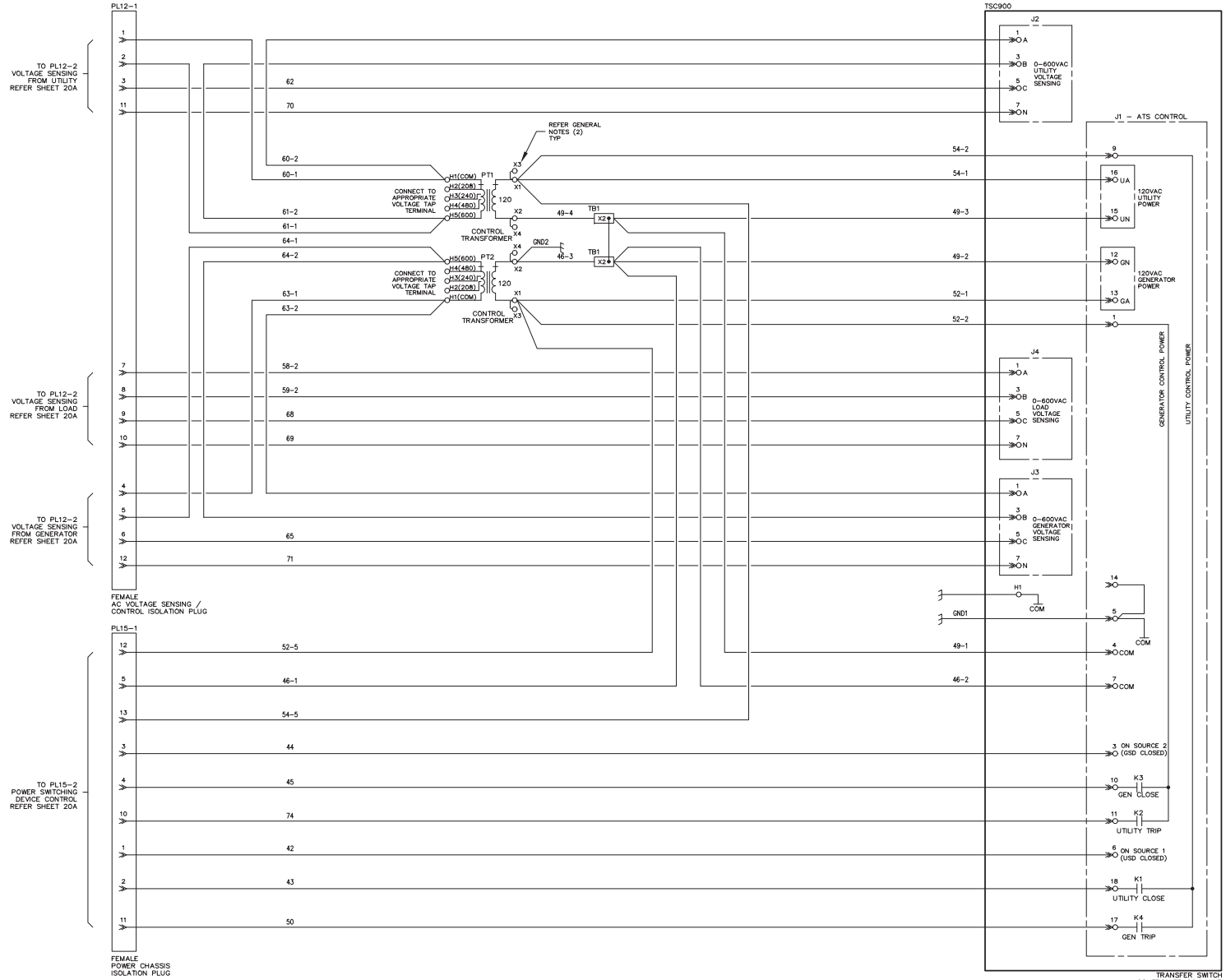


| GENERAL NOTES | |
|---|---|
| 1 | CONTROL TRANSFORMER IS RATED FOR 100VA FOR MCS ATS & 200VA FOR ATS MECHANISM USING TRIP & CLOSE COILS |
| 2 | 100VA CONTROL TRANSFORMER DOES NOT INCLUDE A 2ND 120VAC SECONDARY WIRING (X3/X4) |
| 3 | COLOR CODE: ALL WIRING IS GREY UNLESS NOTED. SAFETY GROUND WIRES ARE GREEN |
| 4 | REFER COVER PAGE / SELECTED OPTION LIST FOR PROJECT SPECIFIC DETAILS |

VOLTAGE (X DENOTES HIGH POLARITY MARKER)

| PT TAP | 208 | 240 | 380 | 400 | 416 | 480 | 600 |
|---|---|---|---|---|---|---|---|
| H1 | X | X | | | | X | X |
| H2 | | | X | X | | | |
| H3 | X | | | | | | |
| H4 | | | | | X | X | |
| H5 | | X | | | X | | X |

| COLOR KEY | |
|---|---|
| BK | BLACK |
| BE | BLUE |
| BN | BROWN |
| GN | GREEN |
| GY | GREY |
| OR | ORANGE |
| PE | PURPLE |
| R | RED |
| W | WHITE |
| Y | YELLOW |
| V | VIOLET |

☐ APPROVED FOR CONSTRUCTION
☐ MASTER COPY ☐ REFERENCE COPY ____ OF ____
☐ MULTIPLE UNIT WORK ORDER
☐ RELEASED FOR INFORMATION
AUTH. BY: _____ DATE: _____

CROSS REFERENCE LEGEND
SOC-C-1
GRID COORDINATE
SHEET No.

DRAWING No. | REFERENCE DRAWINGS

| No. | REVISIONS | BY | AUTH | DATE |
|---|---|---|---|---|
| 4 | TSC900 CONFIGURATION UPDATED | AP | OG | 17-11-17 |
| 3 | GENERAL NOTES AND LOGO UPDATED | AP | OG | 17-10-24 |
| 2 | UPDATED MOS CONTROL PLATE PID | SK | OG | 17-08-16 |
| 1 | WIRE HARNESS UPDATED AS PER ECR-0114744 | AP | OG | 16-07-22 |

THOMSON POWER SYSTEMS

# AUTOMATIC TRANSFER SWITCH
# TSC 900 TRANSFER SWITCH CONTROLLER
# ATS AC CONTROL SCHEMATIC, STD
100 – 4000A

FOR REVIEW ONLY

DRAWINGS AND OR OTHER TECHNICAL INFORMATION SUPPLIED BY THOMSON POWER SYSTEMS AS A PART OF A SALE OF EQUIPMENT ARE FOR THE PURCHASER'S USE SOLELY IN CONJUNCTION WITH THAT EQUIPMENT, UNLESS SPECIFICALLY AGREED TO OTHERWISE AS A PART OF THE TERMS OF SALE.

| | |
|---|---|
| CUSTOMER | THOMSON POWER SYSTEMS |
| CUSTOMER ORDER No. | C-XXXXXX |
| WORK ORDER No. | W-XXXXXX |
| DRAWN BY | AP |
| AUTH BY | OG |
| DATE | 16-01-26 |
| REV | 4 |
| DRAWING/FILE No. | TSC900E100 |
| SHEET | 20B |

© THE INFORMATION ON THIS DRAWING IS THE PROPERTY OF THOMSON POWER SYSTEMS. IT IS NOT TO BE USED DETRIMENTALLY TO OUR INTERESTS.

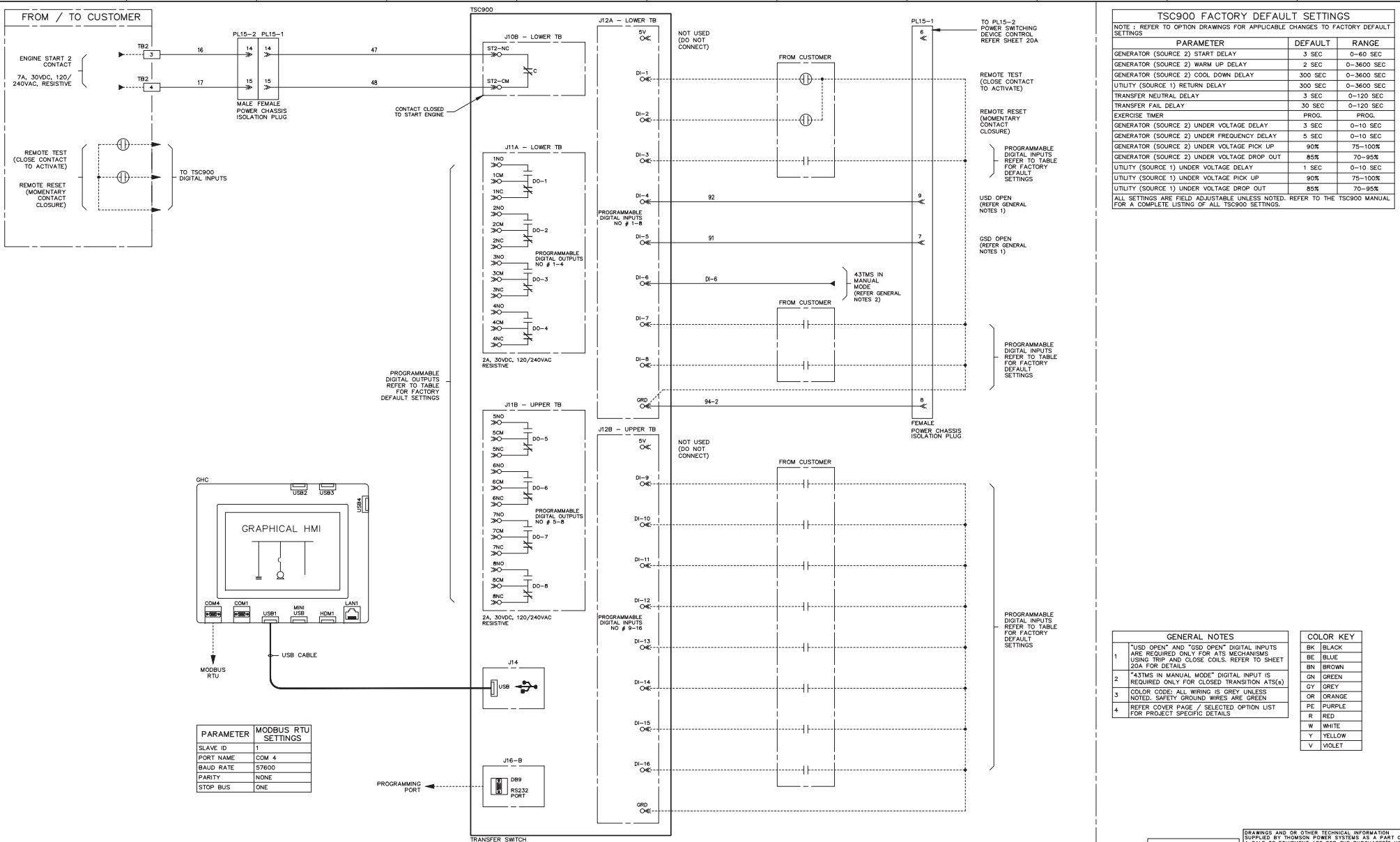


## TSC900 FACTORY DEFAULT SETTINGS

NOTE : REFER TO OPTION DRAWINGS FOR APPLICABLE CHANGES TO FACTORY DEFAULT SETTINGS

| PARAMETER | DEFAULT | RANGE |
|---|---|---|
| GENERATOR (SOURCE 2) START DELAY | 3 SEC | 0–60 SEC |
| GENERATOR (SOURCE 2) WARM UP DELAY | 2 SEC | 0–3600 SEC |
| GENERATOR (SOURCE 2) COOL DOWN DELAY | 300 SEC | 0–3600 SEC |
| UTILITY (SOURCE 1) RETURN DELAY | 300 SEC | 0–3600 SEC |
| TRANSFER NEUTRAL DELAY | 3 SEC | 0–120 SEC |
| TRANSFER FAIL DELAY | 30 SEC | 0–120 SEC |
| EXERCISE TIMER | PROG. | PROG. |
| GENERATOR (SOURCE 2) UNDER VOLTAGE DELAY | 3 SEC | 0–10 SEC |
| GENERATOR (SOURCE 2) UNDER FREQUENCY DELAY | 5 SEC | 0–10 SEC |
| GENERATOR (SOURCE 2) UNDER VOLTAGE PICK UP | 90% | 75–100% |
| GENERATOR (SOURCE 2) UNDER VOLTAGE DROP OUT | 85% | 70–95% |
| UTILITY (SOURCE 1) UNDER VOLTAGE DELAY | 1 SEC | 0–10 SEC |
| UTILITY (SOURCE 1) UNDER VOLTAGE PICK UP | 90% | 75–100% |
| UTILITY (SOURCE 1) UNDER VOLTAGE DROP OUT | 85% | 70–95% |

ALL SETTINGS ARE FIELD ADJUSTABLE UNLESS NOTED. REFER TO THE TSC900 MANUAL FOR A COMPLETE LISTING OF ALL TSC900 SETTINGS.

| PARAMETER | MODBUS RTU SETTINGS |
|---|---|
| SLAVE ID | 1 |
| PORT NAME | COM 4 |
| BAUD RATE | 57600 |
| PARITY | NONE |
| STOP BUS | ONE |

### GENERAL NOTES

| | |
|---|---|
| 1 | "USD OPEN" AND "GSD OPEN" DIGITAL INPUTS ARE REQUIRED ONLY FOR ATS MECHANISMS USING TRIP AND CLOSE COILS. REFER TO SHEET 20A FOR DETAILS |
| 2 | "43TMS IN MANUAL MODE" DIGITAL INPUT IS REQUIRED ONLY FOR CLOSED TRANSITION ATS(s) |
| 3 | COLOR CODE: ALL WIRING IS GREY UNLESS NOTED. SAFETY GROUND WIRES ARE GREEN |
| 4 | REFER COVER PAGE / SELECTED OPTION LIST FOR PROJECT SPECIFIC DETAILS |

### COLOR KEY

| | |
|---|---|
| BK | BLACK |
| BE | BLUE |
| BN | BROWN |
| GN | GREEN |
| GY | GREY |
| OR | ORANGE |
| PE | PURPLE |
| R | RED |
| W | WHITE |
| Y | YELLOW |
| V | VIOLET |

FOR REVIEW ONLY

☐ APPROVED FOR CONSTRUCTION
☐ MASTER COPY ☐ REFERENCE COPY ____ OF ____
☐ MULTIPLE UNIT WORK ORDER
☐ RELEASED FOR INFORMATION
AUTH. BY: _____ DATE: _____

CROSS REFERENCE LEGEND
50C–C–1
GRID COORDINATE
SHEET No.

DRAWING No. | REFERENCE DRAWINGS

| No. | REVISIONS | BY | AUTH | DATE |
|---|---|---|---|---|
| 4 | TSC900 CONFIGURATION UPDATED | AP | OG | 17–11–17 |
| 3 | GENERAL NOTES AND LOGO UPDATED | AP | OG | 17–10–24 |
| 2 | UPDATED MOS CONTROL PLATE PID | SK | OG | 17–08–16 |
| 1 | WIRE HARNESS UPDATED AS PER ECR–0114744 | AP | OG | 16–07–22 |

THOMSON™ POWER SYSTEMS

# AUTOMATIC TRANSFER SWITCH
# TSC 900 TRANSFER SWITCH CONTROLLER
# ATS DC CONTROL SCHEMATIC, STD
100 – 4000A

DRAWINGS AND OR OTHER TECHNICAL INFORMATION SUPPLIED BY THOMSON POWER SYSTEMS AS A PART OF A SALE OF EQUIPMENT ARE FOR THE PURCHASER'S USE SOLELY IN CONJUNCTION WITH THAT EQUIPMENT, UNLESS SPECIFICALLY AGREED TO OTHERWISE AS A PART OF THE TERMS OF SALE.

CUSTOMER THOMSON POWER SYSTEMS
CUSTOMER ORDER No. C–XXXXXX
WORK ORDER No. W–XXXXXX
DRAWN BY AP | AUTH BY OG | DATE 16–01–26 | REV 4
DRAWING/FILE No. TSC900E101
SHEET 20C

© THE INFORMATION ON THIS DRAWING IS THE PROPERTY OF THOMSON POWER SYSTEMS. IT IS NOT TO BE USED DETRIMENTALLY TO OUR INTERESTS.

# ☐ PPR–10 OPTION

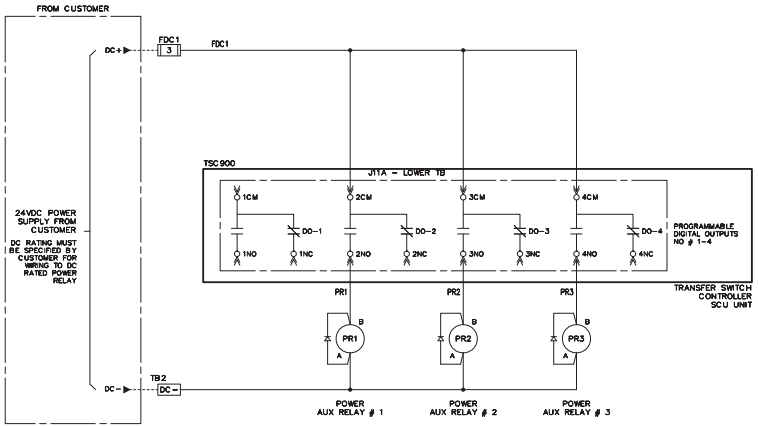


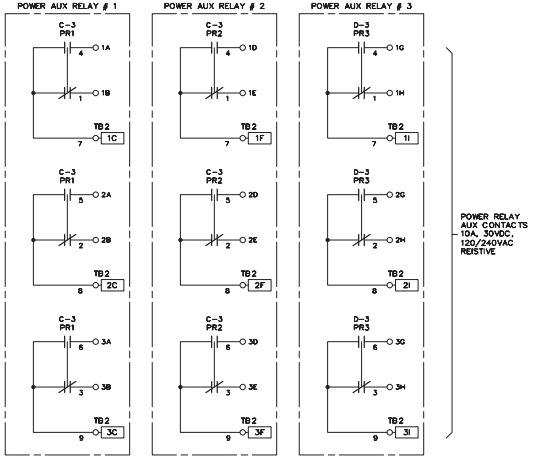


| PR1 | | | |
|---|---|---|---|
| T1 | TYPE | T2 | REF |
| 4 | +h | 7 | A–5 |
| 1 | -w | | |
| 5 | +h | 8 | A–6 |
| 2 | -w | | |
| 6 | +h | 9 | A–7 |
| 3 | -w | | |

| PR2 | | | |
|---|---|---|---|
| T1 | TYPE | T2 | REF |
| 4 | +h | 7 | B–5 |
| 1 | -w | | |
| 5 | +h | 8 | B–6 |
| 2 | -w | | |
| 6 | +h | 9 | B–7 |
| 3 | -w | | |

| PR3 | | | |
|---|---|---|---|
| T1 | TYPE | T2 | REF |
| 4 | +h | 7 | C–5 |
| 1 | -w | | |
| 5 | +h | 8 | C–6 |
| 2 | -w | | |
| 6 | +h | 9 | C–7 |
| 3 | -w | | |

| PPR–10 OPTION NOTES | |
|---|---|
| 1 | FOR POWER RELAY FUNCTIONAL DESCRIPTION REFER TO FACTORY DEFAULT DIGITAL OUTPUT FUNCTION TABLE ON ATS DC CONTROL SCHEMATIC |
| 2 | THE NUMBER OF RELAYS SUPPLIED WILL BE PER ORDERED QUANTITY |
| 3 | CUSTOMER TO WIRE DIRECTLY TO RELAY TERMINALS |
| 4 | SPECIFIED QUANTITY OF PROGRAMMABLE POWER RELAYS ARE WIRED FOR CUSTOMER AS PER OPTION LIST |
| 5 | DC SUPPLY FOR THE RELAYS, BY DEFAULT IS 24VDC. PLEASE SPECIFY THE VOLTAGE RATING OTHER THAN 24VDC ON OPTION LIST |

| BILL OF MATERIALS | | |
|---|---|---|
| PART DESCRIPTION | PART ID | QTY |
| RELAY, 24VDC COIL, 11 PIN SQ., /W LED | 004095 | 3 |
| RELAY SOCKET, 11 PIN, SQ., RAIL MOUNT | 000399 | 3 |
| FUSE HOLDER, 1P, 30A, 600V, 200KA, CC | 002374 | 1 |
| FUSE, 3A, 600VAC, CLASS CC | 003633 | 1 |
| TERM. BLK, RAIL MNT, 40A, 600V, WK4/U, | 001881 | 10 |

| GENERAL NOTES | |
|---|---|
| 1 | FOR MCS/MOS/PCS TYPE ATS, MOUNT THE RELAYS ON SIDE COVER WHERE SPACE PERMITS |
| 2 | FOR ICS ATS MOUNT THE RELAYS ON BACK PAN WHERE EVER THE SPACE PERMITS |
| 3 | REFER COVER PAGE / SELECTED OPTION LIST FOR PROJECT SPECIFIC DETAILS |

PPR RELAY
[TYPICAL]

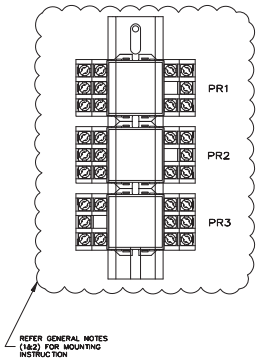


FOR REVIEW ONLY

DRAWINGS AND OR OTHER TECHNICAL INFORMATION SUPPLIED BY THOMSON POWER SYSTEMS AS A PART OF A SALE OF EQUIPMENT ARE FOR THE PURCHASER'S USE IN CONJUNCTION WITH THAT EQUIPMENT, UNLESS SPECIFICALLY AGREED TO OTHERWISE AS A PART OF THE TERMS OF SALE.

☐ APPROVED FOR CONSTRUCTION
☐ MASTER COPY ☐ REFERENCE COPY ____ OF ____
☐ MULTIPLE UNIT WORK ORDER
☐ RELEASED FOR INFORMATION
AUTH. BY: ____ DATE: ____

CROSS REFERENCE LEGEND
50C – C – 1
GRID COORDINATE
SHEET No.

DRAWING No. | REFERENCE DRAWINGS

| No. | REVISIONS | BY | AUTH | DATE |
|---|---|---|---|---|
| 4 | DRAWINGS UPDATED FOR TS970 PRODUCT LINE APPLICATION | SK | OG | 18-03-08 |
| 3 | GENERAL NOTES AND LOGO UPDATED | AP | OG | 17-10-24 |
| 2 | MOUNTING INSTRUCTION UPDATED | SK | OG | 16-09-21 |
| 1 | WIRE HARNESS UPDATED AS PER ECR-0114744 | AP | OG | 16-07-22 |

THOMSON POWER SYSTEMS™

AUTOMATIC TRANSFER SWITCH
MODEL TS 870 / 880 / 970
STANDARD OPTION SCHEMATIC – PPR–10
POWER AUX RELAY

CUSTOMER THOMSON POWER SYSTEMS
CUSTOMER ORDER No. C–XXXXXX
WORK ORDER No. W–XXXXXX
DRAWN BY AP | AUTH BY OG | DATE 16–01–26 | REV 4
DRAWING/FILE No. TSC900E300
SHEET 30A

© THE INFORMATION ON THIS DRAWING IS THE PROPERTY OF THOMSON POWER SYSTEMS. IT IS NOT TO BE USED DETRIMENTALLY TO OUR INTERESTS.

# ☐ CTKXXXX OPTION

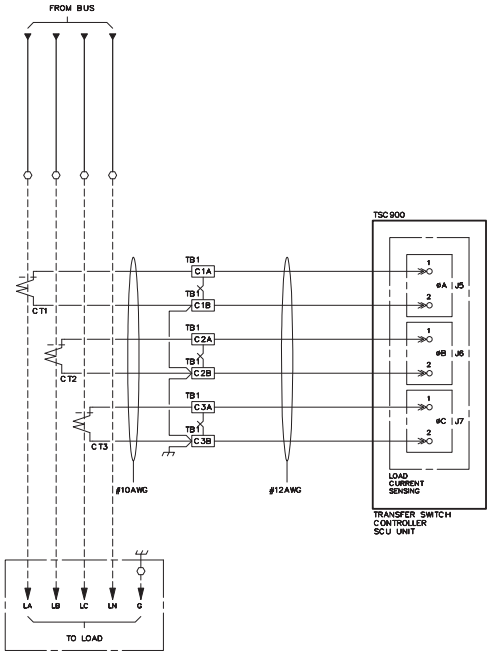


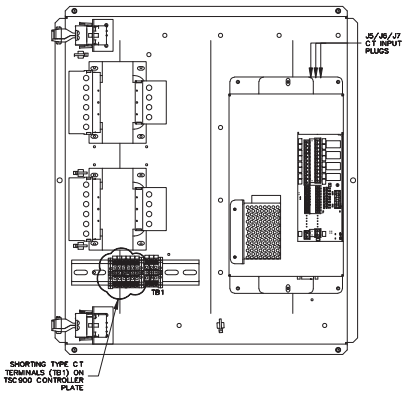


ATS CONTROL PLATE

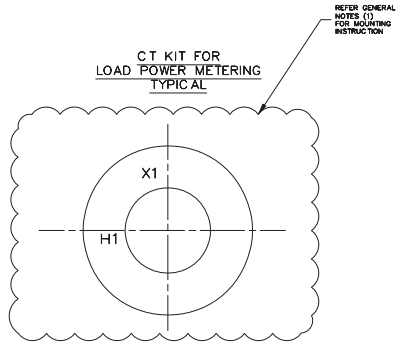


| PART ID | OPTION KITS |
|---|---|
| CTK0100 | 100 AMPS |
| CTK0150 | 150 AMPS |
| CTK0250 | 200–250 AMPS |
| CTK0400 | 400 AMPS |
| CTK0600 | 600 AMPS |
| CTK0800 | 800 AMPS |
| CTK1200 | 1000–1200 AMPS |
| CTK1600 | 1600 AMPS |
| CTK2000 | 2000 AMPS |

| GENERAL NOTES | |
|---|---|
| 1 | CT'S TO BE MOUNTED ON THE LOAD SIDE OF THE ATS. CUSTOMER TO VERIFY POLARITY BEFORE CONNECTING THE CT SECONDARIES TO THE TRANSFER SWITCH CONTROLLER. |
| 2 | ATS CONTROL PLATE MOUNTED ON THE BACK SIDE OF DOOR FOR MCS / MOS / PCS AND FOR ICS MOUNTED ON THE BACKPAN. |
| 3 | REFER COVER PAGE / SELECTED OPTION LIST FOR PROJECT SPECIFIC DETAILS |

BILL OF MATERIALS FOR CABLE HARNESS

| PART DESCRIPTION | PART ID | QTY |
|---|---|---|
| WIRE, 18AWG, GREY, TINNED, TEW, 600V, | 002027 | 600 INCHES |
| TERM. BLK, RAIL MNT, 40A, 600V, WK4/U, | 001861 | 6 |
| TERM. BLK, ENDPLATE, WK 2.5-4/U, | 001872 | 1 |
| SCREW, SHT-MTL, RDH, ROB #8 X 5/8" | 002070 | 2 |
| MTG-RAIL, TYPE-35, SLOTTED(7.5X2-METERS) | 002795 | 6 |
| TERM. BLK, PARTITION PLATE, WK2.5-4/U, | 004189 | 2 |
| CONN, MINI-FIT, J, 94V-2, 2X1-WAY,FEMALE (J5/J6/J7) | 012654 | 3 |
| CONN, FEMALE CRIMP, MINI-FIT, JR. SERIES | 010954 | 6 |
| WIRE SLEEVE, 0.5", EXPANDO PT PLUS, | 000458 | 175 INCHES |
| TERM BLK CROSS CONN.W SCRW WK4/U SR7 | 009677 | 3 |
| TERM. BLK, EARTH TERMINAL, 10-24 AWG | 005211 | 2 |

FOR REVIEW ONLY

DRAWINGS AND OR OTHER TECHNICAL INFORMATION SUPPLIED BY THOMSON POWER SYSTEMS AS A PART OF A SALE OF EQUIPMENT ARE FOR THE PURCHASER'S USE IN CONJUNCTION WITH THAT EQUIPMENT, UNLESS SPECIFICALLY AGREED TO OTHERWISE AS A PART OF THE TERMS OF SALE.

☐ APPROVED FOR CONSTRUCTION
☐ MASTER COPY ☐ REFERENCE COPY ____ OF ____
☐ MULTIPLE UNIT WORK ORDER
☐ RELEASED FOR INFORMATION
AUTH. BY: ____ DATE: ____

CROSS REFERENCE LEGEND
50C-C-1
GRID COORDINATE
SHEET No.

DRAWING No. | REFERENCE DRAWINGS

| No. | REVISIONS | BY | AUTH | DATE |
|---|---|---|---|---|
| 4 | DRAWINGS UPDATED FOR TS970 PRODUCT LINE APPLICATION | SK | OG | 18-03-08 |
| 3 | GENERAL NOTES AND LOGO UPDATED | AP | OG | 17-10-24 |
| 2 | MOUNTING INSTRUCTION UPDATED | SK | OG | 16-09-21 |
| 1 | WIRE HARNESS UPDATED AS PER ECR-0114744 | AP | OG | 16-07-22 |

THOMSON POWER SYSTEMS™

AUTOMATIC TRANSFER SWITCH
MODEL TS 870 / 880 / 970
STANDARD OPTION SCHEMATIC – CTKXXXX
CURRENT TRANSFORMER KIT

CUSTOMER THOMSON POWER SYSTEMS
CUSTOMER ORDER No. C-XXXXXX | WORK ORDER No. W-XXXXXX
DRAWN BY AP | AUTH BY OG | DATE 16-01-26 | REV 4
DRAWING/FILE No. TSC900E304 | SHEET 30E

© THE INFORMATION ON THIS DRAWING IS THE PROPERTY OF THOMSON POWER SYSTEMS. IT IS NOT TO BE USED DETRIMENTALLY TO OUR INTERESTS.

## ☐ AUX BU/ BG OPTION

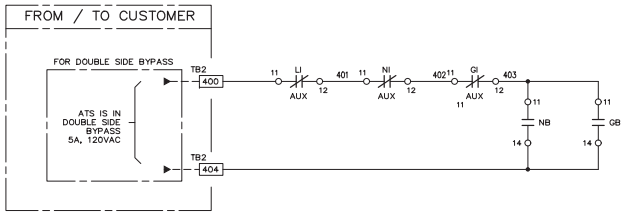


FOR MCS BYPASS ATS APPLICATION

## ☐ AUX BU OPTION

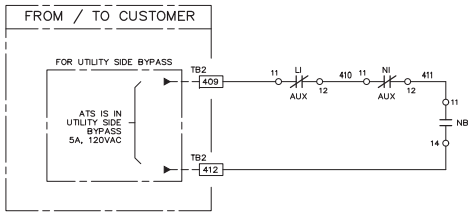


FOR MCS BYPASS ATS APPLICATION

## ☐ AUX BG OPTION

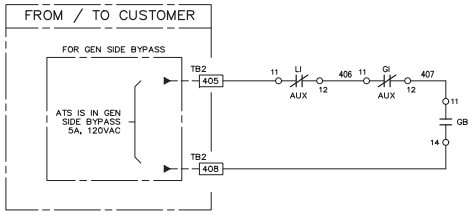


FOR MCS BYPASS ATS APPLICATION

| BILL OF MATERIALS FOR MCS DOUBLE SIDE BYPASS | | | |
|---|---|---|---|
| PART DESCRIPTION | BREAKER | PART ID | QTY |
| BREAKER, 2-AUX CONTACT, TS3 | 100-200A | 012350 | 5 |
| BREAKER, AUX CONTACT CONN., TS3 | 100-200A | 012357 | 5 |
| BREAKER, 2-AUX CONTACT, T4-6 | 250-800A | 012002 | 5 |

| BILL OF MATERIALS FOR MCS SINGLE SIDE BYPASS | | | |
|---|---|---|---|
| PART DESCRIPTION | BREAKER | PART ID | QTY |
| BREAKER, 2-AUX CONTACT, TS3 | 100-200A | 012350 | 3 |
| BREAKER, AUX CONTACT CONN., TS3 | 100-200A | 012357 | 3 |
| BREAKER, 2-AUX CONTACT, T4-6 | 250-800A | 012002 | 3 |

## ☐ AUX BU OPTION (ICS BYPASS – FIXED)

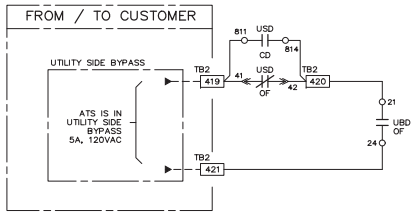


FOR DRAWOUT ATS SECTION AND FIXED BYPASS SECTION APPLICATION

## ☐ AUX BG OPTION (ICS BYPASS – FIXED)

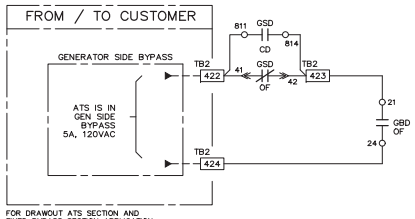


FOR DRAWOUT ATS SECTION AND FIXED BYPASS SECTION APPLICATION

## ☐ AUX BU OPTION (ICS BYPASS – DRAWOUT)

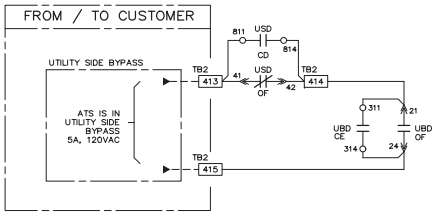


FOR DRAWOUT ATS SECTION AND DRAWOUT BYPASS SECTION APPLICATION

## ☐ AUX BG OPTION (ICS BYPASS – DRAWOUT)

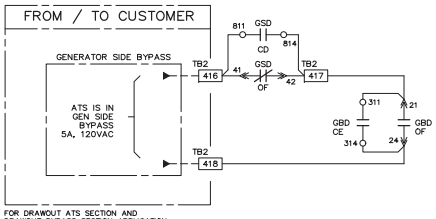


FOR DRAWOUT ATS SECTION AND DRAWOUT BYPASS SECTION APPLICATION

| GENERAL NOTES | |
|---|---|
| 1 | GEN SIDE / UTILITY SIDE / DOUBLE SIDE BYPASS AUX OPTION FOR MCS ATS TYPE IS PROVIDED AS PER OPTION LIST |
| 2 | FOR MCS BYPASS, USE SUITABLE PART ID FOR AUX CONTACT BASED ON THE AMPERAGE RATING AS MENTIONED IN BILL OF MATERIAL |
| 3 | FOR MCS TS3 FRAME, USE AUX CONTACT AND ITS CONNECTION AS MENTIONED IN BILL OF MATERIAL. FOR T4-T6 FRAME, AUX. CONNECTION INCLUDED IN AUX CONTACT PART ID |
| 4 | FIXED / DRAW OUT BYPASS AUX OPTION FOR ICS ATS TYPE IS PROVIDED AS PER OPTION LIST |
| 5 | ICS ATS & BYPASS CONTACTS UTILIZED FROM EXISTING 4A-4B AUX CONTACTS WHICH ARE ORDERED WITHIN THE BREAKER |
| 6 | REFER COVER PAGE / SELECTED OPTION LIST FOR PROJECT SPECIFIC DETAILS |

FOR REVIEW ONLY

☐ APPROVED FOR CONSTRUCTION
☐ MASTER COPY ☐ REFERENCE COPY ____ OF ____
☐ MULTIPLE UNIT WORK ORDER
☐ RELEASED FOR INFORMATION
AUTH. BY: _____ DATE: _____

CROSS REFERENCE LEGEND
SOC-C-1
GRID COORDINATE
SHEET No.

DRAWING No. | REFERENCE DRAWINGS

| No. | REVISIONS | BY | AUTH | DATE |
|---|---|---|---|---|
| 3 | GENERAL NOTES AND LOGO UPDATED | AP | OG | 17-10-24 |
| 2 | MOUNTING INSTRUCTION UPDATED | SK | OG | 16-09-21 |
| 1 | WIRE HARNESS UPDATED AS PER ECR-0114744 | AP | OG | 16-07-22 |

THOMSON™ POWER SYSTEMS

AUTOMATIC TRANSFER SWITCH
MODEL TS 870 / 880
STANDARD OPTION SCHEMATIC – BYPASS AUX
ATS BYPASSED OPTION

DRAWINGS AND OR OTHER TECHNICAL INFORMATION SUPPLIED BY THOMSON POWER SYSTEMS AS A PART OF A SALE OF EQUIPMENT ARE FOR THE PURCHASER'S USE SOLELY IN CONJUNCTION WITH THAT EQUIPMENT, UNLESS SPECIFICALLY AGREED TO OTHERWISE AS A PART OF THE TERMS OF SALE.

| | | | |
|---|---|---|---|
| CUSTOMER | THOMSON POWER SYSTEMS | | |
| CUSTOMER ORDER No. | C-XXXXXX | WORK ORDER No. | W-XXXXXX |
| DRAWN BY | AP | AUTH BY | OG |
| DATE | 16-01-26 | REV | 3 |
| DRAWING/FILE No. | TSC900E352 | SHEET | 30M |

© THE INFORMATION ON THIS DRAWING IS THE PROPERTY OF THOMSON POWER SYSTEMS. IT IS NOT TO BE USED DETRIMENTALLY TO OUR INTERESTS.

**Date: Jun 12, 2018**

# Transmittal

**Arctic Electrical Nunavut Ltd**
PO Box 1381
Iqaluit, Nu.
X0A 0H0
Phone: 867-975-3494
**From: Lee Pitcher**



SE-07R2 (ELE-007)
PO-P18-120 Frontier

**Project** **Waste Wate Treatment Plant**
**Location** Iqaluit NU
**To** Kudlik Construction
Contact: Sandra Rousseau P.Eng.
srousseau@kudlik.biz

Attached are the following items:

- [x] Drawings
- [ ] Prints
- [ ] Plans
- [x] Specifications
- [ ] Information
- [ ] Submittals

Other:

THESE ARE TRANSMITTED FOR:

- [ ] Prior Approval
- [ ] Approval
- [ ] Approval as Submitted
- [ ] Approval as Noted
- [X] Resubmittal for Approval
- [ ] Corrections
- [ ] Your Use
- [ ] Review and Comment
- [ ] Record

Bids due on:
Other:

| Qty | Type | MFG | Part |
|---|---|---|---|

Drawing E601 Loadbank

These drawings have a slight change to them based on the engineers comments. There is an emergency stop located on the electrical and mechanical drawings. Please confirm these are good.
Also – the lead time is looking at 5 weeks currently.

Those were already returned to you. We did receive a resubmit on Friday but we're not sure why. Our last review did not require a resubmit. There is nothing additional for us to review.

In regards to the note we provided, it is the Contractor's responsibility to ensure the emergency stop button is provided as per the specs.

Arctic Electrical needs to coordinate with the supplier.

No further review on our end is required.

Kristen S. Smith, P.Eng.

Senior Associate, Electrical Team Lead Northern Canada

Direct: 709 576-1458 ext 5761242

Mobile: 867 765-8237

Kristen.Smith@stantec.com

**Notes:**
Please review the attached approval drawings carefully. Production cannot be scheduled until a signed copy of the final approved drawing are received. Be aware that once drawings are approved, any errors due to incorrect information are the responsibility of the contractor.

Do not hesitate to contact me if you have any questions or concerns.

**Date: July 26, 2018**

REVIEWED BY CONTRACTOR
Kudlik Construction Ltd.
NAME: Sandra Rousseau P.Eng
DATE: Jul 26, 2018

# Transmittal

**Arctic Electrical Nunavut Ltd**
PO Box 1381
Iqaluit, Nu.
X0A 0H0
Phone: 867-975-3494
**From: Lee Pitcher**

**Project** **Waste Wate Treatment Plant**
**Location** Iqaluit NU
**To** Kudlik Construction
Contact: Sandra Rousseau P.Eng.
srousseau@kudlik.biz



SE-07R1 (ELE-007)
PO-P18-120 Frontier

Attached are the following items:

- [x] Drawings
- [ ] Prints
- [ ] Plans
- [x] Specifications
- [ ] Information
- [ ] Submittals

Other:

THESE ARE TRANSMITTED FOR:

- [ ] Prior Approval
- [ ] Approval
- [ ] Approval as Submitted
- [ ] Approval as Noted
- [X] Resubmittal for Approval
- [ ] Corrections
- [ ] Your Use
- [ ] Review and Comment
- [ ] Record

Bids due on:
Other:

| Qty | Type | MFG | Part |
|---|---|---|---|

Drawing E-601-Load Bank

STANTEC PROJECT #: 110126045
SUBMITTAL # ELE-07R1

This review by Stantec is for general conformance with the design concept of Stantec's design of the:
- [ ] Architectural
- [ ] Structural
- [ ] Mechanical
- [x] Electrical
- [ ] Other

component(s) only and does not mean that Stantec has verified or approves the shop drawing(s). The Contractor remains solely responsible for the shop drawing(s) and this review by Stantec does not relieve the Contractor of the Contractor's responsibility for errors or omissions in the shop drawing(s) or for meeting all requirements of the contract documents. This review does not mean that Stantec approves the detailed design inherent in the shop drawing, responsibility for which shall remain with the Contractor submitting same, nor does this review mean that Stantec accepts any deviation of the shop drawing(s) from the contract documents. The Contractor is responsible for confirming all dimensions and correlating them at the job site, for all construction means, methods and techniques, and for coordination of construction work of all trades, including coordination of all shop drawings.

Stantec

- [ ] REVIEWED
- [x] REVIEWED, AS NOTED
- [ ] REVISE AND RESUBMIT
- [ ] NOT REVIEWED

DATE 2018-07-30
BY Konrad Goluch

Power bank shall have exterior emergency power off switch on enclosure as spec 26 32 14 2.7 .5

**Notes:**
Please review the attached approval drawings carefully. Production cannot be scheduled until a signed copy of the final approved drawing are received. Be aware that once drawings are approved, any errors due to incorrect information are the responsibility of the contractor.

Do not hesitate to contact me if you have any questions or concerns.

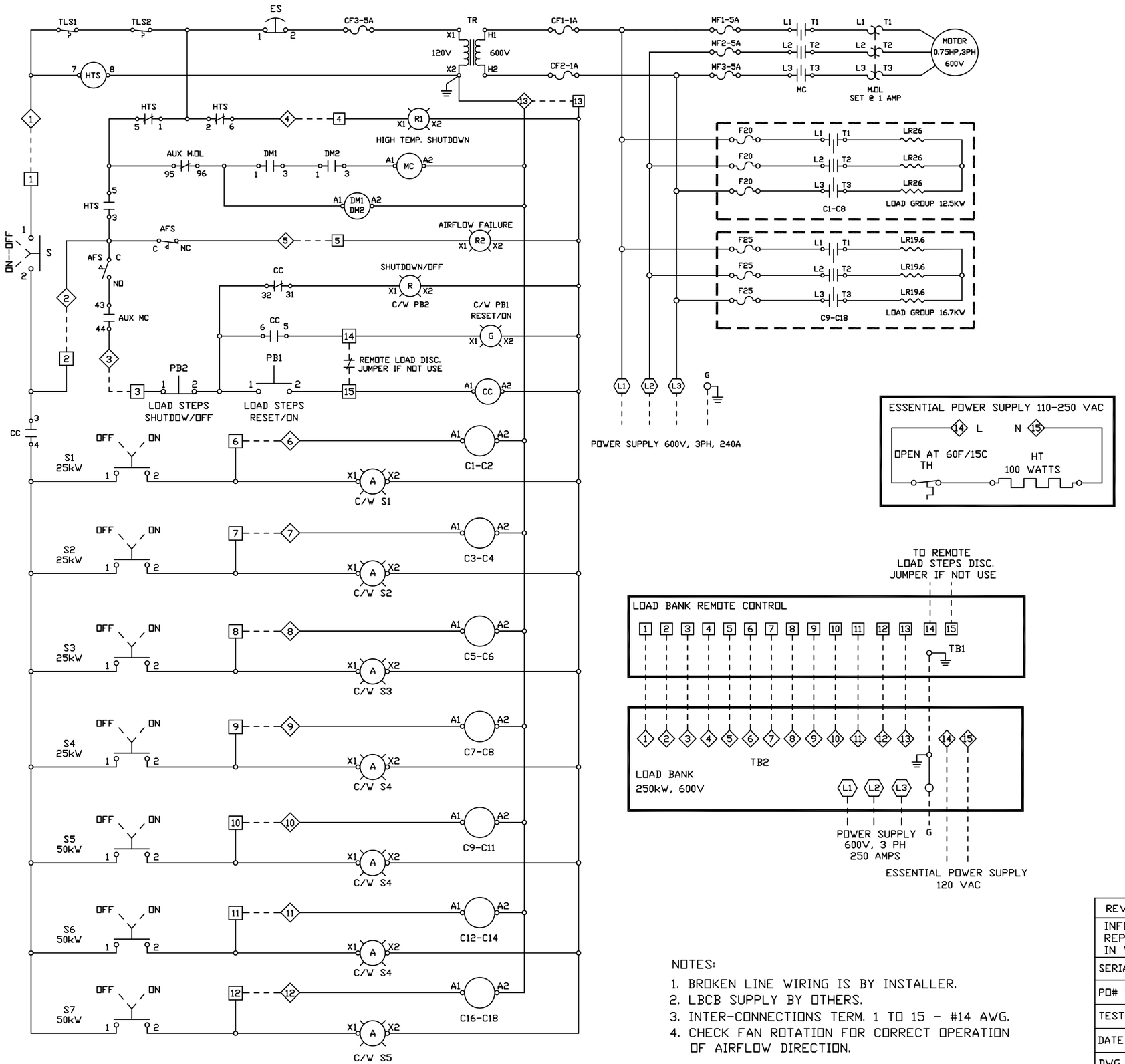





| KEY | DESCRIPTION | MFR PART NUMBER |
|---|---|---|
| MOTOR | 0.75 HP-1725-TEFC-600/3/60 F56 | LEESON A0090178 |
| FAN FRAME | EMERSON 24" | FRAME-EMERSON 2DVP24 |
| FAN BLADE | ALUMINUM 24" | DAYTON 3GTG4 CAST AL |
| MF1-MF3 | FUSE 5A, 600VAC FAST ACTIVE | LITTELFUSE ATM5 |
| MC | MOTOR CONTACTOR 3P, 7.5HP, 600V | MC18-120 |
| M.OL | MOTOR OVERLOAD 1-1.6A | CG GT32 1-1.6 |
| AFS | AIR FLOW SWITCH SPDT 5A/120 | KFR-1, 90 PA |
| CF1-CF2 | FUSE 1A, 600VAC FAST ACTIVE | LITTELFUSE ATM1 |
| CF3 | FUSE 5A, 250VAC FAST ACTIVE | LITTELFUSE OTM5 |
| F20 | FUSE 20A, 600VAC FAST ACTIVE | LITTELFUSE ATM20 |
| F25 | FUSE 25A, 600VAC FAST ACTIVE | LITTELFUSE ATM25 |
| C1-C18 | LOAD CONTACTOR 3P, 40A, 600V | MC32-120AC |
| R1, R2 | INDICATOR LIGHT | AUS 22 RED LED |
| TR | TRANSFORMER 600-120, 250VA | HAMMOND SP250ACP |
| LR26 | LOAD RESISTOR | NICHROME 60-20-26 |
| LR19.6 | LOAD RESISTOR | NICHROME 60-16.5-19.6 |
| TLS | TEMPERATURE LIMIT SWITCH | SRL-260 MANUAL RESET |
| HTS | HIGH TEMP. SHUTDOWN RELAY | CG RPY002-120AC |
| S | ON-OFF SWITCH | AUS 22 BLACK |
| S1-S7 | ON-OFF SWITCH ILLUMINATED | AUS 22 AMBER LED |
| PB1 | ILLUM. PUSH-BUTTON N.O. | AUS 22 MM GREEN LED-120AC |
| PB2 | ILLUM. PUSH-BUTTON N.C. | AUS 22 MM RED LED-120AC |
| HT | HEATER 120 VAC, 100W | SAIPWELL HG 14003 |
| TH | THERMOSTAT N/C 0-60C | STEGO 01146.9-99 |
| CC | CONTROL CONTACTOR 3P, 18A, 600V | MC18-120 |
| DM1, DM2 | DAMPER MOTOR C/W LIMIT SWITCH | SIEMENS GCA226.1U-120 |
| ES | EMERGENCY STOP SWITCH | IDEC 22 MM LATCHING |
| □ TB1 | REMOTE CONTROL TERMINALS | PHOENIX UK3N |
| ◇ TB2 | LOAD BANK TERMINALS | PHOENIX UK3N |
| ⬡ L | COPPER BUSBAR PLATED | 8" X 1" X 0.25" |




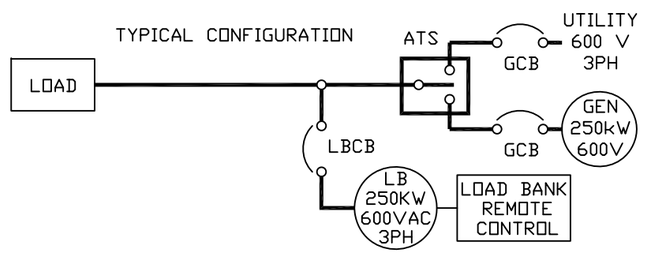


NOTES:

1. BROKEN LINE WIRING IS BY INSTALLER.
2. LBCB SUPPLY BY OTHERS.
3. INTER-CONNECTIONS TERM. 1 TO 15 - #14 AWG.
4. CHECK FAN ROTATION FOR CORRECT OPERATION OF AIRFLOW DIRECTION.

| REV. | BY | DATE | DESCRIPTION |
|---|---|---|---|

INFORMATION INCLUDED IN THIS DRAWING IS PROPRIETARY AND IS NOT TO BE REPRODUCED, DISTRIBUTED OR DISCLOSED EXCEPT AS SPECIFICALLY AUTHORIZED IN WRITING BY JP POWER TECHNOLOGY INC.

| | |
|---|---|
| SERIAL NO | F802 |
| PO# 52855, JUNE 19, 2018 | |
| TESTED BY | XX |
| DATE | JULY 20, 2018 |
| DWG. NO | F802-1 |

JP POWER TECHNOLOGY INC.
EDMONTON, ALBERTA, TEL. 780-456-9167, FAX 780-478-7135

SIZE B

TITLE: OUTDOOR RESISTIVE LOAD BANK
MODEL: SM-250D7
ELECTRICAL SCHEMATIC

CUSTOMER: FRONTIER POWER PRODUCT EDMONTON

FRONT VIEW

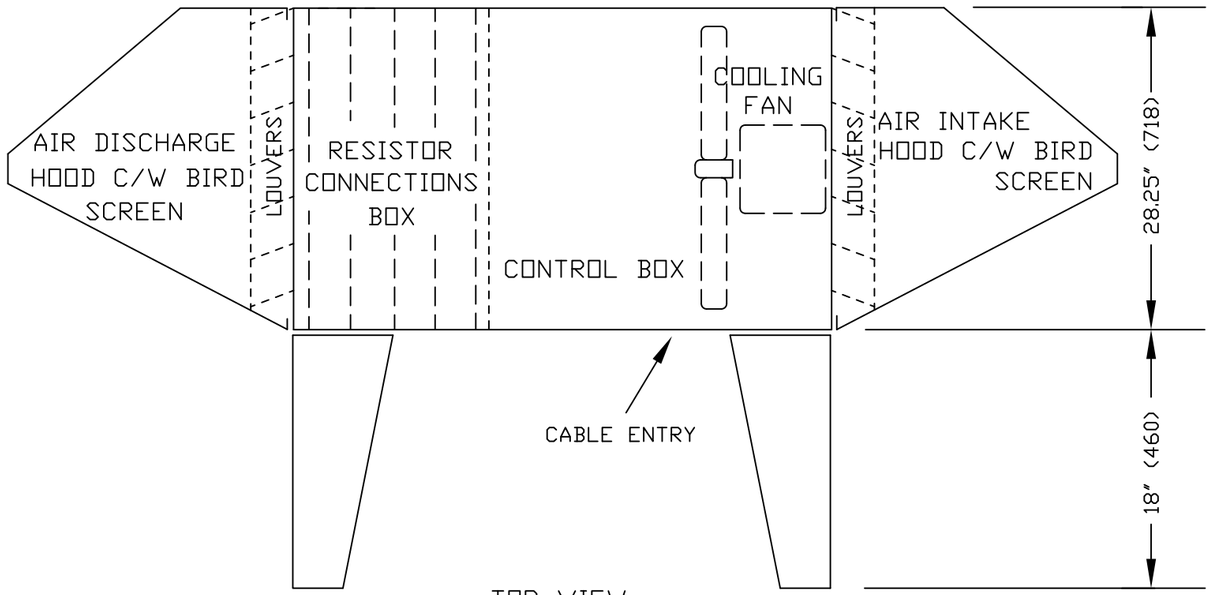


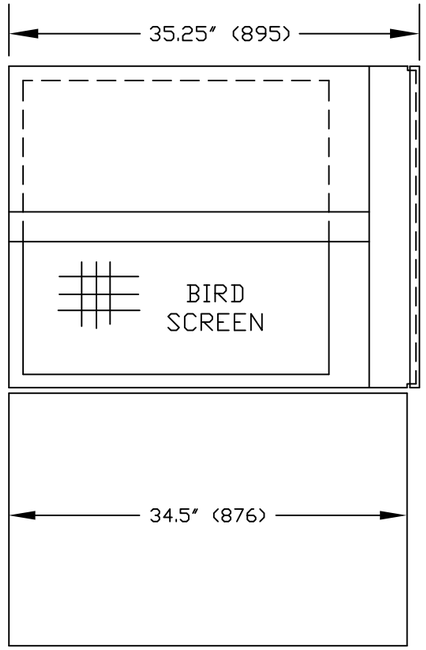


SIDE VIEW

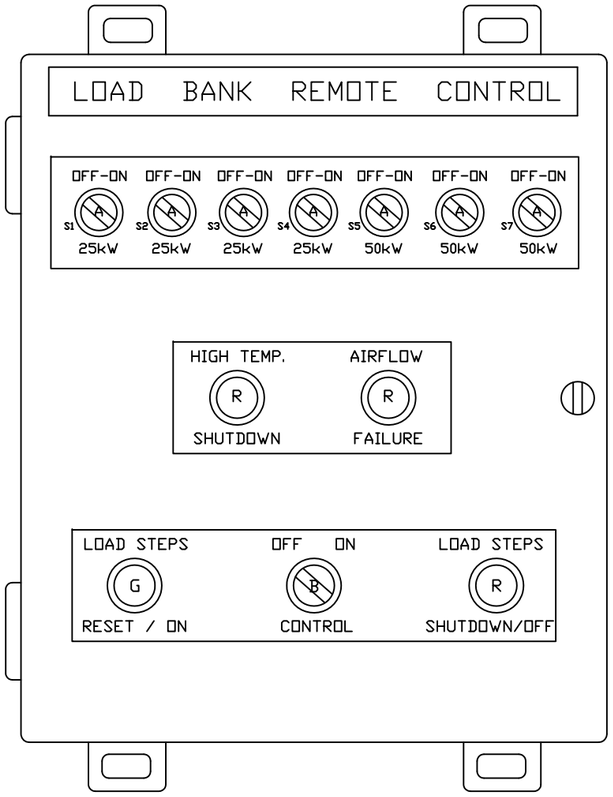


REMOTE CONTROL
H-14" (356), W-12" (305), H-6 (152)

TOP VIEW

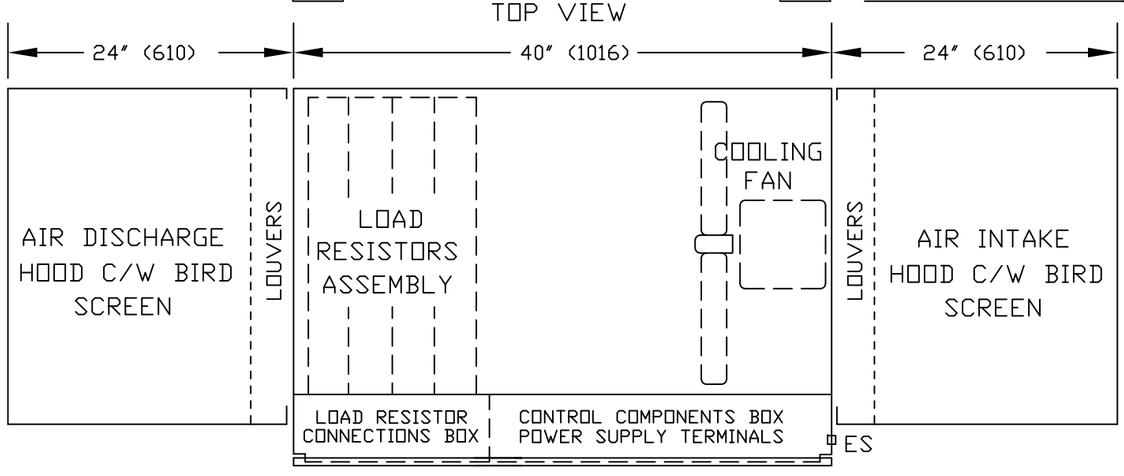


BOTTOM VIEW OF MOUNTING LEGS

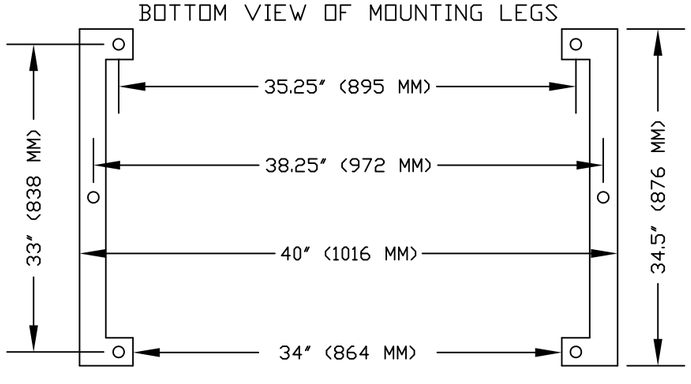


NOTES:

1. ALL DIMENSIONS ARE SHOWN IN INCHES (MILLIMETERS)
2. WEIGHT-300 LBs, 136 KG
3. MAXIMUM AIR INLET TEMPERATURE IS 100F, 38C
4. MINIMUM CLEARANCE FOR AIR DISCHARGE-24 FT (7.3 MT)
5. REMOTE CONTROL PANEL- CEMA 1, GRAY 61 POWDER COAT PAINT
6. LOAD BANK ENCLOSURE- CEMA 3, 304 SS. GA18, NATURAL FINISH.

| REV. | BY | DATE | DESCRIPTION |
|---|---|---|---|

INFORMATION INCLUDED IN THIS DRAWING IS PROPRIETARY AND IS NOT TO BE REPRODUCED, DISTRIBUTED OR DISCLOSED EXCEPT AS SPECIFICALLY AUTHORIZED IN WRITING BY JP POWER TECHNOLOGY INC.

| | |
|---|---|
| SERIAL NO F802 | JP POWER TECHNOLOGY INC. |
| PO# 52855, JUNE 19, 2018 | EDMONTON, ALBERTA, TEL. 780-456-9167, FAX 780-478-7135 |
| TESTED BY XX | SIZE B — OUTDOOR RESISTIVE LOAD BANK |
| DATE JULY 20, 2018 | MODEL: SM-250D7 |
| DWG. NO F802-2 | TITLE ENCLOSURE LAYOUT |
| CUSTOMER | FRONTIER POWER PRODUCT EDMONTON |




PO Box 1381, Iqaluit, NU X0A 0H0 -P867-975-3494

# 26 50 00 - Lighting

**Date: Jun 25, 2018**

REVIEWED BY CONTRACTOR
Kudlik Construction Ltd.
NAME: Sandra Rousseau P.Eng
DATE: Jun 26, 2018

# Transmittal

**Arctic Electrical Nunavut Ltd**
PO Box 1381
Iqaluit, Nu.
X0A 0H0
Phone: 867-975-3494
**From: Lee Pitcher**

**Project** **Waste Wate Treatment Plant**
**Location** Iqaluit NU
**To** Kudlik Construction
Contact: Sandra Rousseau P.Eng.
srousseau@kudlik.biz



SE-04
PO-P18-124

Attached are the following items:

- [x] Drawings
- [ ] Prints
- [ ] Plans
- [x] Specifications
- [ ] Information
- [ ] Submittals

Other:

THESE ARE TRANSMITTED FOR:

- [ ] Prior Approval
- [x] Approval
- [ ] Approval as Submitted
- [ ] Approval as Noted
- [ ] Resubmittal for Approval
- [ ] Corrections
- [ ] Your Use
- [ ] Review and Comment
- [ ] Record

Bids due on:
Other:

| Qty | Type | MFG | Part |
|---|---|---|---|

Section 26 50 00 Lighting

**Notes:**
Please review the attached approval drawings carefully. Production cannot be scheduled until a signed copy of the final approved drawing are received. Be aware that once drawings are approved, any errors due to incorrect information are the responsibility of the client.

Do not hesitate to contact me if you have any questions or concerns.

BDA LIGHTING GROUP

Jun 25, 2018

Guillevin Ottawa
175 Richmond Road
Ottawa ON K1Z 6W3

**RE:** Iqaluit Water Treatment Plant

| Qty | Type | MFG | Part |
|---|---|---|---|
| 8 | 401 | HUBBELL LIGHTING | QSP2-24L-50-5K7-4-UNV-BL |
| 6 | 404 | Peerless Electric | NSL-RA-4-60-50K-W-WG-347 |
| 19 | 405 | Peerless Electric | NSL-RA-4-60-50K-W-WG-347 |
| 1 | 402 | | FMV11LCY/UNV34 76 |
| 21 | 403 | | VMV5L2A/UNV34 |
| 47 | 406 | | EGW/4/S/LED/HO/CW/UE |

AEN Note: These are correct counts

Contractor to review quantity prior to ordering

STANTEC PROJECT #: 110126045

SUBMITTAL # ELE-004 Lighting

This review by Stantec is for general conformance with the design concept of Stantec's design of the:

- ☐ Architectural
- ☐ Structural
- ☐ Mechanical
- ☑ Electrical
- ☐ Other

Stantec

component(s) only and does not mean that Stantec has verified or approves the shop drawing(s). The Contractor remains solely responsible for the shop drawing(s) and this review by Stantec does not relieve the Contractor of the Contractor's responsibility for errors or omissions in the shop drawing(s) or for meeting all requirements of the contract documents. This review does not mean that Stantec approves the detailed design inherent in the shop drawing, responsibility for which shall remain with the Contractor submitting same, nor does this review mean that Stantec accepts any deviation of the shop drawing(s) from the contract documents. The Contractor is responsible for confirming all dimensions and correlating them at the job site, for all construction means, methods and techniques, and for coordination of construction work of all trades, including coordination of all shop drawings.

- ☐ REVIEWED
- ☑ REVIEWED, AS NOTED
- ☐ REVISE AND RESUBMIT
- ☐ NOT REVIEWED

DATE June 26, 2018

BY Chester Martinez, E.I.T.

| BDA LIGHTING GROUP | **Project Name:** Iqaluit Water Treatment Plant | **Product Number:** QSP2-24L-50-5K7-4-UNV-BL<br>Notes: | **Type:** 401<br>BDA18-23511 |
|---|---|---|---|

# GEOPAK SERIES SIZE 2 LED

Architectural Wallpack

TRP2/RDI2/QSP2 NEW

Cat.#

Job | Type

HUBBELL Outdoor Lighting

Approvals

## SPECIFICATIONS

**Applications:**
Medium sized architectural wallpacks in three stylish shapes accentuate building architecture and provide excellent illumination and uniformity

**Construction:**
- Die-cast aluminum housing and door
- Seven powder coat standard finishes, plus custom color options

**LED:**
- 24 or 32 high power LEDs deliver up to 10,800 lumens
- Up to 146 Lumens per watt
- Different lenses offer a variety of distribution patterns - Type I, II, III and IV (Forward throw)
- 3000K - 70 CRI, 4000K - 70 CRI, and 5000K - 70 CRI, CCT nominal

**Electrical:**
- Optional Dual Drivers & Dual Power Feeds for 50, 70 and 90 watt versions
- 120-277, 347 and 480 voltage, 50/60Hz
- Power factor ≥ 90%
- THD (Total Harmonic Distortion) <20%
- Ambient operating temperature -40°C to 40°C
- 20kA surge protection (series); Automatically takes fixture off-line when device is consumed

**Installation/Mounting:**
- Quick-mount adapter with gasket seal provides easy installation to wall or to recessed junction box (4" square junction box). Fixture attaches by two Allen-head hidden fasteners for tamper resistance.
- Black box accessory available for surface conduit application
- Optional inverted/up mounting (must specify when ordering)

**Options/Controls:**
- Drivers are 0-10V dimming standard
- Universal button photocontrol for dusk to dawn energy savings
- Photocell and occupancy sensor options available for complete on/off and dimming control
- Occupancy sensor options available for complete on/off and dimming control
- In addition, GeoPak Size 2 can be specified with SiteSync™ wireless control system for reduction in energy and maintenance cost while optimizing light quality 24/7. See ordering information or visit www. hubbell-lighting.com/sitesync for more details

**Listings:**
- IP65 rated housing
- DesignLights Consortium® (DLC) qualified. Please refer to the DLC website for specific product qualifications at www.designlights.org
- Zero uplight (U0), dark sky, neighbor friendly
- Drivers IP66 and RoHS compliant

**Battery Backup:**
- Intergral Battery Backup provides emergency lighting for the required 90 minute path of egress.
- Includes a long-life Lithium Iron Phosphate battery with optional battery heater for cold temperature application.
- Utilizes 4 LEDs in emergency mode with 657 lumens. Each of the 4 LEDs in emergency are designed to function independently in the unlikely event of a single LED malfunction
- Spectron® self-testing/self-diagnostic electronics are included standard
- Independent dedicated driver and LED array for battery/emergency mode operation.

**Warranty:**
For more information visit:
http://www.hubbelloutdoor.com/resources warranty/

## PRODUCT IMAGE(S)




## DIMENSIONS

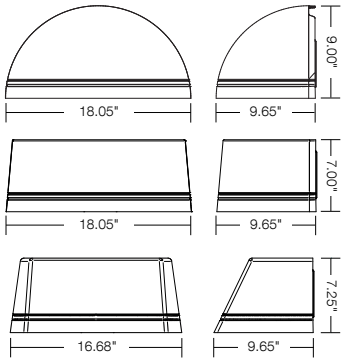


## SHIPPING INFORMATION

| Catalog Number | G.W(kg)/ CTN | Carton Dimensions | | |
|---|---|---|---|---|
| | | Length Inch (cm) | Width Inch (cm) | Height Inch (cm) |
| QSP2 | 17 (7.7) | 20.5 (52) | 10.5 (26) | 11 (28) |
| RDI2 | 18 (8.2) | 20.5 (52) | 9.5 (24) | 12 (30) |
| TRP2 | 16 (7.3) | 18.5 (47) | 9.5 (24) | 11.5 (29) |

## CERTIFICATIONS/LISTINGS

c UL us

DLC QPL LISTED

ida

*3000K and warmer CCTs only

## ORDERING INFORMATION

ORDERING EXAMPLE: TRP2-24L30-3K7-2-UNV-DB

____ - ____ - ____ - ____ - ____ - ____ - ____ - ____

| FAMILY | LEDS - WATTAGE | CCT | DISTRIBUTION | VOLTAGE | FINISH | CONTROL OPTIONS | OPTIONS |
|---|---|---|---|---|---|---|---|
| TRP2 Trapezoid | 24L-30 24 LEDs, 30 watts | 3K7 3000K, 70CRI | 1 Type I | UNV 120-277V | BL Black Textured | PC Button Photocontrol | SF[3] Single Fuse & Fuse Holder |
| RDI2 Radius | 24L-50 24 LEDs, 50 watts | 4K7 4000K, 70CRI | 2 Type II | 120 120V | DB Dark Bronze Textured | SCP[4,5] Programmable occupancy sensor, factory default is 10% light output | DF[3] Double Fuse & Fuse Holder |
| QSP2 Qtr-sphere | 24L-70 24 LEDs, 70 watts | 5K7 5000K, 70CRI | 3 Type III | 208 208V | GT Graphite Textured | SCO[4] Sensor Control, On/Off | E[3] Battery Pack (0ºC) |
| | 24L-90 24 LEDs, 90 watts | | 4 Type IV | 240 240V | GYS Light Gray Smooth | SWP[3,7] SiteSync Pre-Commission | EH[3] Battery Pack (-30oC) with heater |
| | 32L-70 32 LEDs, 70 watts | | | 277 277V | PS Platinum Silver Smooth | SWPM[3,4,7,8] SiteSync Pre-commission w/Occupancy Sensor | 2DR[6] Dual Drivers |
| | 32L-90 32 LEDs, 90 watts | | | UHV[1] 347/480V | WH White Textured | SPEC SCP/SCO & SWPM MOUNT HEIGHT | 2PF[6] Dual Power Feeds |
| | | | | 347[1] 347V | CC Custom Color | -8F Up to 8ft mount height | CS Comfort Shield |
| | | | | 480[1] 480V | | -20F Up to 20ft mount height | |

**SECONDARY MOUNTING**
BLANK Downlight Only
NV[2] Inverted/Up Mounting

[1] 70 & 90 watt versions only
[2] Not available with SCP, SCO or SWPM sensor options
[3] Must specify voltage (120, 277 or 347V only for SWP & SWP, 120 or 277V only for E & EH)
[4] PCU option not applicable, included in sensor
[5] Must order minimum of one remote control to program dimming settings, 0-10V fully adjustable dimming with automatic daylight calibration and different time delay settings
[6] Not available with 30w version
[7] Must specify group and zone information at time or order. See www.HubbellLighting.com/products/sitesync for future details
[8] Specify time delay; dimming level and mounting height


© 2017 HUBBELL OUTDOOR LIGHTING, All Rights Reserved • For more information visit our website: **www.hubbelloutdoor.com** • Printed in USA

| BDA LIGHTING GROUP | **Project Name:** Iqaluit Water Treatment Plant | **Product Number:** QSP2-24L-50-5K7-4-UNV-BL<br>Notes: | **Type:** 401<br>BDA18-23511 |
|---|---|---|---|

## *ACCESSORIES (ORDER SEPARATELY)*

| Catalog Number | Description |
|---|---|
| **SCP-REMOTE*** | Remote control for SCP option. Order at least one per project to program and control dimming settings |
| **BB-GEO-XX** | Black box with 4 - 1/2" threaded conduit holes, specify finish by replacing "XX" with finish selection, eg. Dark Bronze "DB" |
| **SWUSB**** | SiteSync loaded on USB flash drive (Windows based only) |
| **SWTAB**** | SiteSync Windows Tablet |
| **SWBRG+** | SiteSync Wireless Bridge Node |

* Must order minimum of one remote control to program dimming settings, 0-10V fully adjustable dimming with automatic daylight calibration and different time delay settings.
** When ordering with SiteSync, one of the following interface options must be chosen an ordered separately. Each option contains the SiteSync License, GUI and Bridge Node.
\+ If needed, an additional Bridge Node can be ordered.

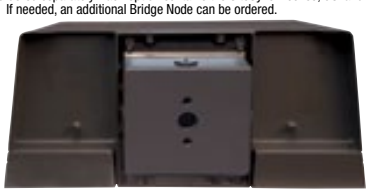

**BB-GEO-XX** – Mounted to luminaire

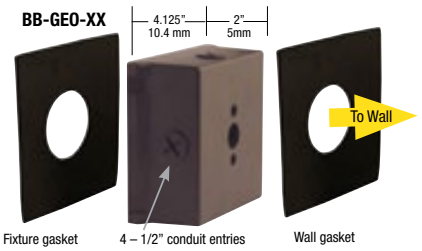


## *INPUT POWER CONSUMPTION*

| # OF LEDS | DRIVE CURRENT (mA) | INPUT VOLTAGE (V) | CURRENT (Amps) | SYSTEM POWER (w) |
|---|---|---|---|---|
| 24 | 350mA | 120 | 0.23 | 28 |
| | | 277 | 0.10 | 28 |
| | 625mA | 120 | 0.41 | 49 |
| | | 277 | 0.18 | 49 |
| | 900mA | 120 | 0.59 | 71 |
| | | 277 | 0.25 | 71 |
| | | 347 | 0.20 | 71 |
| | | 480 | 0.15 | 71 |
| | 1100mA | 120 | 0.72 | 87 |
| | | 277 | 0.31 | 87 |
| | | 347 | 0.25 | 87 |
| | | 480 | 0.18 | 87 |
| 32 | 650mA | 120 | 0.56 | 67 |
| | | 277 | 0.24 | 67 |
| | | 347 | 0.19 | 67 |
| | | 480 | 0.14 | 67 |
| | 850mA | 120 | 0.69 | 83 |
| | | 277 | 0.30 | 83 |
| | | 347 | 0.24 | 83 |
| | | 480 | 0.17 | 83 |

STANTEC PROJECT # 110126045

This review by Stantec is for general conformance with the design concept of Stantec's design of the:
☐ Architectural ☐ Structural ☐ Mechanical ☑ Electrical ☐ Other component(s) only and does not mean that Stantec has verified or approves the shop drawing(s). The Contractor remains solely responsible for the shop drawing(s) and this review by Stantec does not relieve the Contractor of the Contractor's responsibility for errors or omissions in the shop drawing(s) or for meeting all requirements of the contract documents. This review does not mean that Stantec approves the detailed design inherent in the shop drawing, responsibility for which shall remain with the Contractor submitting same, nor does this review mean that Stantec accepts any deviation of the shop drawing(s) from the contract documents. The Contractor is responsible for confirming all dimensions and correlating them at the job site, for all construction means, methods and techniques, and for coordination of construction work of all trades, including coordination of all shop drawings.

SUBMITTAL # ELE-004 Lighting

Stantec

☑ REVIEWED
☐ REVIEWED, AS NOTED
☐ REVISE AND RESUBMIT
☐ NOT REVIEWED

DATE June 26, 2018

BY Chester Martinez, E.I.T.

## *PERFORMANCE DATA*

| # OF LEDS | DRIVE CURRENT | SYSTEM WATTS | DIST. TYPE | 5K (5000K nominal, 70 CRI) LUMENS | LPW¹ | B | U | G | 4K (4000K nominal, 70 CRI) LUMENS | LPW¹ | B | U | G | 3K (3000K nominal, 70 CRI) LUMENS | LPW¹ | B | U | G |
|---|---|---|---|---|---|---|---|---|---|---|---|---|---|---|---|---|---|---|
| 24 | 350mA | 28 | 1 | 4,075 | 146 | 1 | 0 | 0 | 4,065 | 146 | 1 | 0 | 0 | 3,660 | 131 | 0 | 0 | 0 |
| | | | 2 | 3,747 | 134 | 1 | 0 | 1 | 3,738 | 134 | 1 | 0 | 1 | 3,366 | 121 | 1 | 0 | 1 |
| | | | 3 | 3,756 | 135 | 1 | 0 | 1 | 3,747 | 134 | 1 | 0 | 1 | 3,374 | 121 | 1 | 0 | 1 |
| | | | 4 | 3,656 | 131 | 0 | 0 | 1 | 3,647 | 131 | 0 | 0 | 1 | 3,284 | 118 | 0 | 0 | 1 |
| | 625mA | 49 | 1 | 6,329 | 130 | 1 | 0 | 0 | 6,313 | 130 | 1 | 0 | 0 | 5,685 | 117 | 1 | 0 | 0 |
| | | | 2 | 5,820 | 120 | 1 | 0 | 1 | 5,806 | 119 | 1 | 0 | 1 | 5,228 | 108 | 1 | 0 | 1 |
| | | | 3 | 5,833 | 120 | 1 | 0 | 2 | 5,819 | 120 | 1 | 0 | 2 | 5,240 | 108 | 1 | 0 | 2 |
| | | | 4 | 5,678 | 117 | 1 | 0 | 2 | 5,664 | 117 | 1 | 0 | 2 | 5,100 | 105 | 1 | 0 | 2 |
| | 900mA | 71 | 1 | 8,613 | 122 | 1 | 0 | 1 | 8,592 | 122 | 1 | 0 | 1 | 7,737 | 110 | 1 | 0 | 1 |
| | | | 2 | 7,921 | 112 | 1 | 0 | 2 | 7,902 | 112 | 1 | 0 | 2 | 7,115 | 101 | 1 | 0 | 2 |
| | | | 3 | 7,939 | 112 | 1 | 0 | 2 | 7,920 | 112 | 1 | 0 | 2 | 7,131 | 101 | 1 | 0 | 2 |
| | | | 4 | 7,728 | 109 | 1 | 0 | 2 | 7,709 | 109 | 1 | 0 | 2 | 6,942 | 98 | 1 | 0 | 2 |
| | 1100mA | 87 | 1 | 10,791 | 124 | 1 | 0 | 1 | 10,765 | 124 | 1 | 0 | 1 | 9,694 | 112 | 1 | 0 | 1 |
| | | | 2 | 9,924 | 114 | 2 | 0 | 2 | 9,900 | 114 | 1 | 0 | 2 | 8,915 | 103 | 1 | 0 | 2 |
| | | | 3 | 9,946 | 115 | 1 | 0 | 2 | 9,922 | 114 | 1 | 0 | 2 | 8,935 | 103 | 1 | 0 | 2 |
| | | | 4 | 9,682 | 112 | 1 | 0 | 2 | 9,659 | 111 | 1 | 0 | 2 | 8,696 | 100 | 1 | 0 | 2 |
| 32 | 650mA | 67 | 1 | 8,621 | 129 | 1 | 0 | 1 | 8,600 | 128 | 1 | 0 | 1 | 7,744 | 116 | 1 | 0 | 1 |
| | | | 2 | 7,928 | 118 | 1 | 0 | 2 | 7,909 | 118 | 1 | 0 | 2 | 7,122 | 106 | 1 | 0 | 2 |
| | | | 3 | 7,946 | 119 | 1 | 0 | 2 | 7,927 | 118 | 1 | 0 | 2 | 7,137 | 107 | 1 | 0 | 2 |
| | | | 4 | 7,735 | 115 | 1 | 0 | 2 | 7,716 | 115 | 1 | 0 | 2 | 6,948 | 104 | 1 | 0 | 2 |
| | 850mA | 83 | 1 | 10,806 | 130 | 1 | 0 | 1 | 10,780 | 130 | 1 | 0 | 1 | 9,705 | 117 | 1 | 0 | 1 |
| | | | 2 | 9,938 | 120 | 2 | 0 | 2 | 9,914 | 119 | 1 | 0 | 2 | 8,927 | 108 | 1 | 0 | 2 |
| | | | 3 | 9,960 | 120 | 1 | 0 | 2 | 9,936 | 120 | 1 | 0 | 2 | 8,947 | 108 | 1 | 0 | 2 |
| | | | 4 | 9,695 | 117 | 1 | 0 | 2 | 9,672 | 117 | 1 | 0 | 2 | 8,709 | 105 | 1 | 0 | 2 |


© 2016 HUBBELL OUTDOOR LIGHTING, All Rights Reserved • For more information visit our website: **www.hubbelloutdoor.com** • Printed in USA

| BDA LIGHTING GROUP | **Project Name:** Iqaluit Water Treatment Plant | **Product Number:** QSP2-24L-50-5K7-4-UNV-BL<br>Notes: | **Type:** 401<br>BDA18-23511 |
|---|---|---|---|

## PHOTOMETRIC REPORTS

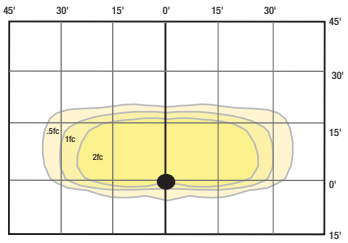


TRP2-24L-50-4K7-1
15" MOUNTING HEIGHT

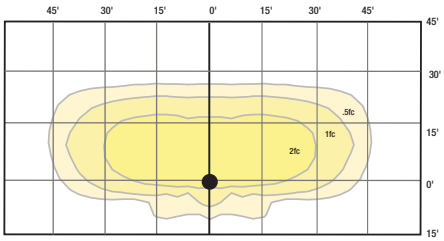


TRP2-24L-50-4K7-2
15" MOUNTING HEIGHT

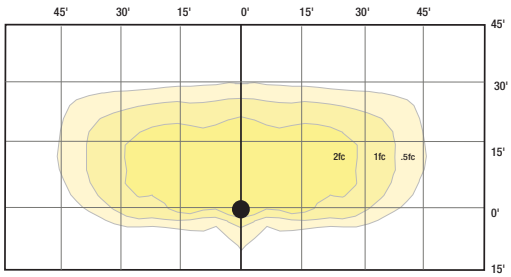


TRP2-24L-50-4K7-3
15" MOUNTING HEIGHT

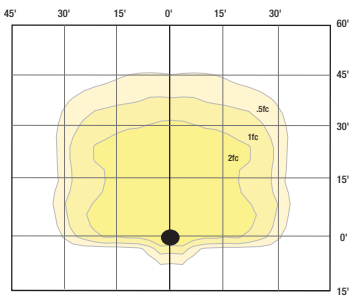


TRP2-24L-50-4K7-4
15" MOUNTING HEIGHT

## PHOTOMETRICS - BATTERY BACK UP

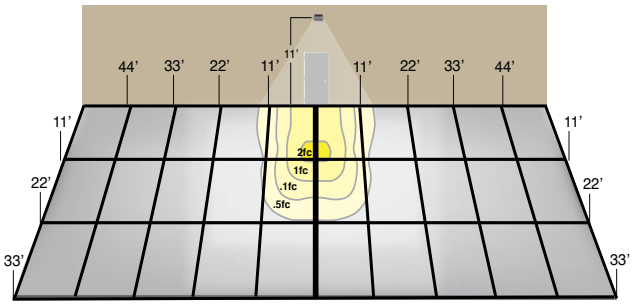


11' Mounting Height

Provides Life Safety Code average illuminance of 1.0 fc. Assumes open space with no obstructions and mounting height of 11'.

Diagrams for illustration purposes only, please consult factory for application layout.

## E & EH EMERGENCY BATTERY BACKUP

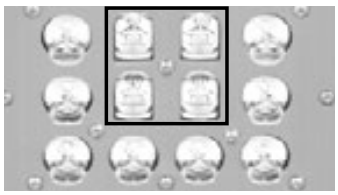

24 or 32 high power LEDs generate up to 11,000 lumens in normal mode and use 4 LEDs for up to 700 lumens in emergency mode.

## INVERTED MOUNTING



Inverted mounting capabilities for uplighting applications. Specially designed frosted acrylic diffuser softens output, improves uniformity and prevents water from collecting.

## COMFORT SHIELD



Comfort shield option utilizes a frosted acrylic lens that softens output and improves uniformity. Available from the factory or as an accessory for field installation.

## CONTROL OPTIONS



Programmable occupancy sensor offers greater control and energy savings with adjustable delay and dimming levels (Factory default is 10%)


Due to our continued efforts to improve our products, product specifications are subject to change without notice.
© 2017 HUBBELL OUTDOOR LIGHTING, All Rights Reserved • For more information visit our website: **www.hubbelloutdoor.com** • Printed in USA

| BDA LIGHTING GROUP | **Project Name:** Iqaluit Water Treatment Plant | **Product Number:** NSL-RA-4-60-50K-W-WG-347<br>Notes: | **Type:** 404<br>BDA18-23511 |
|---|---|---|---|

PEERLESS electric·électrique

| PROJECT: | DATE: |
|---|---|
| CAT. NO: | TYPE: |
| NOTES: | VOLTS: |

# NSL-RA

LED Narrow Strip Luminaire – Rounded Lens

LED

## GENERAL DESCRIPTION

LED luminaire for surface or suspended installation, featuring a rounded extruded ribbed frosted acrylic lens. Available in 2ft, 4ft and 8ft models that provide uniform illumination with the narrow design. Available individually or for continuous-row mounting for uniform continuous lighting. Ideal for general utility applications, including commercial, residential, retail and also works well in cove applications.



## SHIELDING

A rounded extruded ribbed frosted acrylic lens is standard.

## CONSTRUCTION

Rigid one-piece body constructed from code gauge steel.

## ELECTRICAL

L80 performance at 60,000 hours minimum.
120-270V or 347V
80 CRI Standard**

3000K 3500K 4000K 5000K

## CERTIFICATION

Approved to UL1598 and
CSA C22.2 No. 250 standards*
Rated for damp locations.

Check the DLC Qualified Products List at *designlights.org* to confirm which versions are qualified.

## FINISH

Standard finish is high gloss white polyester baked powder coat enamel.

GLOSSY / MATTE

*other colours available. Contact factory

## MOUNTING

SURFACE MOUNTED

SUSPENDED

## LENGTHS

| NOMINAL (ft) | ACTUAL(in) |
|---|---|
| 2 ft | 22.459" |
| 4 ft | 44.584" |
| 8 ft | 88.928" |

## SENSOR

**OC**= On/Off Occupancy control
**O5**= 100%-50% Hi/Low Occupancy control
Consult factory

*Normal temperature: -20 degrees Celsius to +25 degrees Celsius.
**Other dimming options, lumen options, 90CRI and lengths available. Consult Factory.

V1-2018/01/09

STANTEC PROJECT #: 110126045
SUBMITTAL # ELE-004 Lighting

This review by Stantec is for general conformance with the design concept of Stantec's design of the:

☐ Architectural ☐ Structural ☐ Mechanical ☑ Electrical ☐ Other

component(s) only and does not mean that Stantec has verified or approves the shop drawing(s). The Contractor remains solely responsible for the shop drawing(s) and this review by Stantec does not relieve the Contractor of the Contractor's responsibility for errors or omissions in the shop drawing(s) or for meeting all requirements of the contract documents. This review does not mean that Stantec approves the detailed design inherent in the shop drawing, responsibility for which shall remain with the Contractor submitting same, nor does this review mean that Stantec accepts any deviation of the shop drawing(s) from the contract documents. The Contractor is responsible for confirming all dimensions and correlating them at the job site, for all construction means, methods and techniques, and for coordination of construction work of all trades, including coordination of all shop drawings.

Stantec

☑ REVIEWED
☐ REVIEWED, AS NOTED
☐ REVISE AND RESUBMIT
☐ NOT REVIEWED

DATE June 26, 2018

BY Chester Martinez, E.I.T.

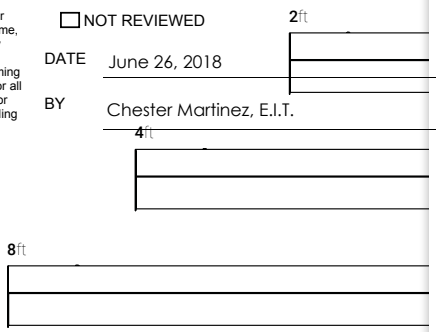


## ORDERING INFORMATION

NSL – RA – – – – – – – – NO OPTION – NO OPTION –

| OPTICAL DESIGN | LENGTH | LUMENS | CCT | FINISH | *OPTIONAL* | MOUNTING *OPTIONAL* | POWER CORD *OPTIONAL* | DRIVER |
|---|---|---|---|---|---|---|---|---|
| **RA** = Rounded Acrylic | **2** = 2' | **15** = 1500lm<br>**23** = 2300lm<br>**30** = 3000lm | **30K** = 3000K<br>**35K** = 3500K<br>**40K** = 4000K<br>**50K** = 5000K | **GLOSSY**<br>**W** = White Housing<br>**B** = Black Housing<br>**G** = Metallic Grey Housing<br>**MATTE**<br>**WM** = White Matte Housing<br>**BM** = Black Matte Housing<br>**GM** = Grey Matte Housing | **WG** = Wireguard | **A4** = Aircraft 48in<br>**A5** = Aircraft 60in<br>**A8** = Aircraft 96in<br>**A12** = Aircraft 144in<br>*for row mounting option, Consult factory | **C1** = Cord 5ft<br>**C2** = Cord 6ft<br>**C4** = Cord 9ft<br>**C7** = Cord 13ft | **MV** = Standard 120V-277V Dimming (0-10v)<br>**347** = Standard 347V Dimming (0-10v) |
| | **4** = 4' | **29** = 2900lm<br>**30** = 3000lm<br>**40** = 4000lm<br>**46** = 4600lm<br>**60** = 6000lm | | | | | | |
| | **8** = 8' | **60** = 6000lm<br>**80** = 8000lm<br>**96** = 9600lm<br>**120** = 12000lm | | | | | | |

| BDA LIGHTING GROUP | **Project Name:** Iqaluit Water Treatment Plant | **Product Number:** NSL-RA-4-60-50K-W-WG-347<br>Notes: | **Type:** 404<br>BDA18-23511 |
|---|---|---|---|

# PEERLESS electric·électrique

# NSL-RA

LED Narrow Strip Luminaire – Rounded Lens

## MODELS

**NSL-RA-2**

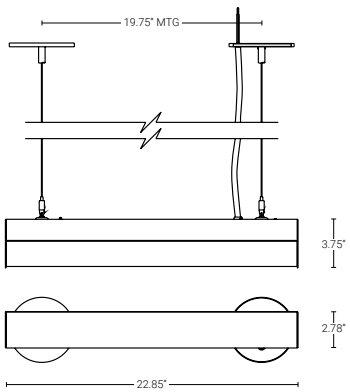


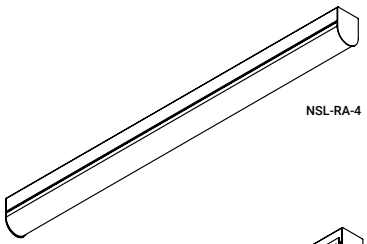

**NSL-RA-4**

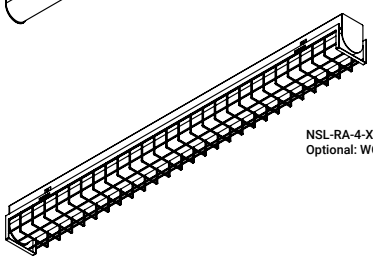

**NSL-RA-4-XX-XXK-X-WG-XX-XX**
**Optional: WG** = Wireguard

**NSL-RA-4**

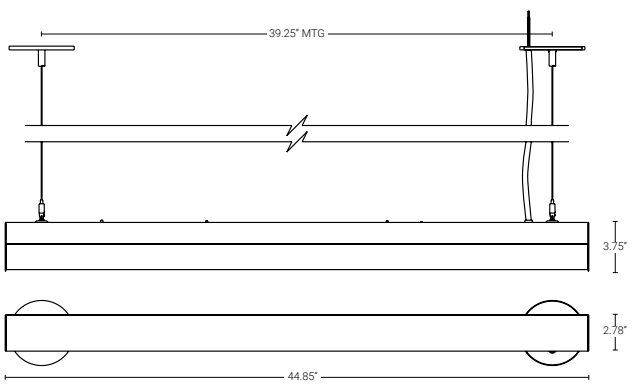


**NSL-RA-8**

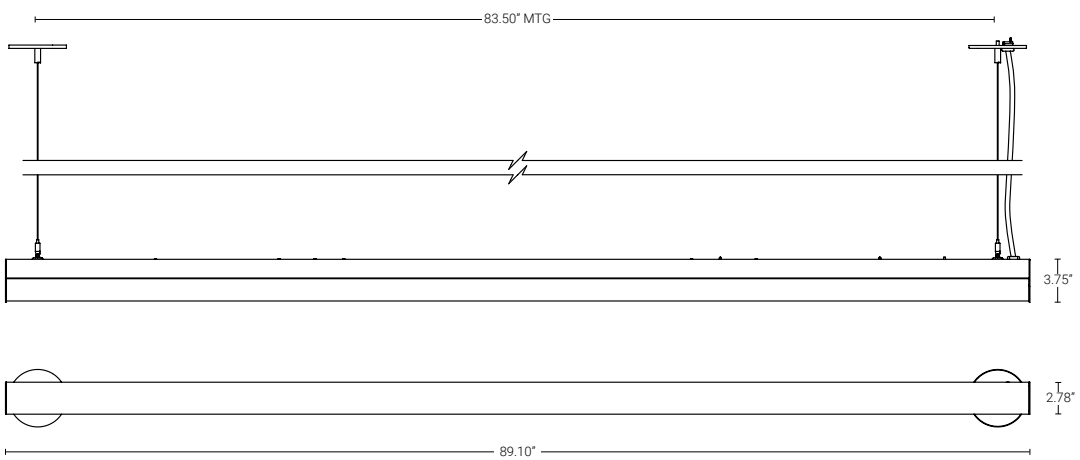


**Head Office - Montreal, Québec**
Tel.: (514) 595-1671
Email: info@peerless-electric.com

**Toronto, Ontario**
Tel.: (416) 751-5644
Email: info@peerless-electric.com

**Western Canada**
Tel.: (403) 479-5943 / (514) 595-1671
Email: tkolody@peerless-electric.com

Specifications are subject to change. Please confirm latest specifications prior to placing order.

| BDA LIGHTING GROUP | **Project Name:** Iqaluit Water Treatment Plant | **Product Number:** NSL-RA-4-60-50K-W-WG-347<br>Notes: | **Type:** 405<br>BDA18-23511 |
|---|---|---|---|

PEERLESS electric·électrique

| PROJECT: | DATE: |
|---|---|
| CAT. NO: | TYPE: |
| NOTES: | VOLTS: |

# NSL-RA

LED Narrow Strip Luminaire – Rounded Lens

LED

## GENERAL DESCRIPTION

LED luminaire for surface or suspended installation, featuring a rounded extruded ribbed frosted acrylic lens. Available in 2ft, 4ft and 8ft models that provide uniform illumination with the narrow design. Available individually or for continuous-row mounting for uniform continuous lighting. Ideal for general utility applications, including commercial, residential, retail and also works well in cove applications.



## SHIELDING

A rounded extruded ribbed frosted acrylic lens is standard.

## ELECTRICAL

L80 performance at 60,000 hours minimum.
120-270V or 347V
80 CRI Standard**

3000K 3500K 4000K 5000K

## FINISH

Standard finish is high gloss white polyester baked powder coat enamel.

GLOSSY / MATTE

*other colours available. Contact factory

## LENGTHS

| NOMINAL (ft) | ACTUAL(in) |
|---|---|
| 2 ft | 22.459" |
| 4 ft | 44.584" |
| 8 ft | 88.928" |

## CONSTRUCTION

Rigid one-piece body constructed from code gauge steel.

## CERTIFICATION

Approved to UL1598 and
CSA C22.2 No. 250 standards*
Rated for damp locations.

Check the DLC Qualified Products List at *designlights.org* to confirm which versions are qualified.

## MOUNTING

SURFACE MOUNTED

SUSPENDED

## SENSOR

**OC**= On/Off Occupancy control
**O5**= 100%-50% Hi/Low Occupancy control
Consult factory

*Normal temperature: -20 degrees Celsius to +25 degrees Celsius.
**Other dimming options, lumen options, 90CRI and lengths available. Consult Factory.

V1-2018/01/09

SUSPENSION NOT INCLUDED
SUPPLIED BY OTHERS

## ORDERING INFORMATION

NSL – RA – – – – – – NO OPTION – NO OPTION –

| OPTICAL DESIGN | LENGTH | LUMENS | CCT | FINISH | *OPTIONAL* | MOUNTING *OPTIONAL* | POWER CORD *OPTIONAL* | DRIVER |
|---|---|---|---|---|---|---|---|---|
| **RA** = Rounded Acrylic | **2** = 2' | **15** = 1500lm | **30K** = 3000K | **GLOSSY** | **WG** = Wireguard | **A4** = Aircraft 48in | **C1** = Cord 5ft | **MV** = Standard 120V-277V Dimming (0-10v) |
| | | **23** = 2300lm | **35K** = 3500K | **W** = White Housing | | **A5** = Aircraft 60in | **C2** = Cord 6ft | |
| | | **30** = 3000lm | **40K** = 4000K | **B** = Black Housing | | **A8** = Aircraft 96in | **C4** = Cord 9ft | **347** = Standard 347V Dimming (0-10v) |
| | **4** = 4' | **29** = 2900lm | **50K** = 5000K | **G** = Metallic Grey Housing | | **A12** = Aircraft 144in | **C7** = Cord 13ft | |
| | | **30** = 3000lm | | **MATTE** | | *for row mounting option, Consult factory | | |
| | | **40** = 4000lm | | **WM** = White Matte Housing | | | | |
| | | **46** = 4600lm | | **BM** = Black Matte Housing | | | | |
| | | **60** = 6000lm | | **GM** = Grey Matte Housing | | | | |
| | **8** = 8' | **60** = 6000lm | | | | | | |
| | | **80** = 8000lm | | | | | | |
| | | **96** = 9600lm | | | | | | |
| | | **120** = 12000lm | | | | | | |



STANTEC PROJECT #: 110 26045

SUBMITTAL # ELE-004 Lighting

This review by Stantec is for general conformance with the design concept of Stantec's design of the:

☐ Architectural ☐ Structural ☐ Mechanical ☑ Electrical ☐ Other

component(s) only and does not mean that Stantec has verified or approves the shop drawing(s). The Contractor remains solely responsible for the shop drawing(s) and this review by Stantec does not relieve the Contractor of the Contractor's responsibility for errors or omissions in the shop drawing(s) or for meeting all requirements of the contract documents. This review does not mean that Stantec approves the detailed design inherent in the shop drawing, responsibility for which shall remain with the Contractor submitting same, nor does this review mean that Stantec accepts any deviation of the shop drawing(s) from the contract documents. The Contractor is responsible for confirming all dimensions and correlating them at the job site, for all construction means, methods and techniques, and for coordination of construction work of all trades, including coordination of all shop drawings.

Stantec

☑ REVIEWED

☐ REVIEWED, AS NOTED

☐ REVISE AND RESUBMIT

☐ NOT REVIEWED

DATE June 26, 2018

BY Chester Martinez, E.I.T.

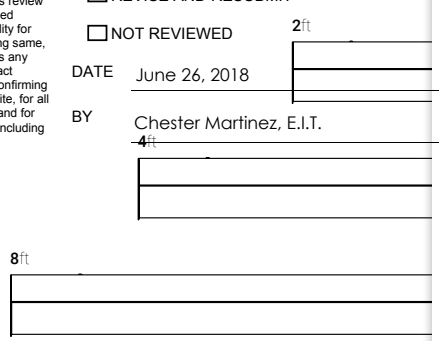

| BDA LIGHTING GROUP | **Project Name:** Iqaluit Water Treatment Plant | **Product Number:** NSL-RA-4-60-50K-W-WG-347<br>Notes: | **Type:** 405<br>BDA18-23511 |
|---|---|---|---|

# PEERLESS electric·électrique

# NSL-RA

LED Narrow Strip Luminaire – Rounded Lens

## MODELS

**NSL-RA-2**

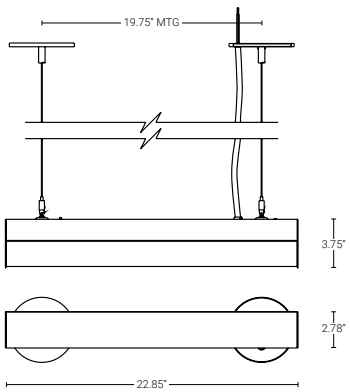


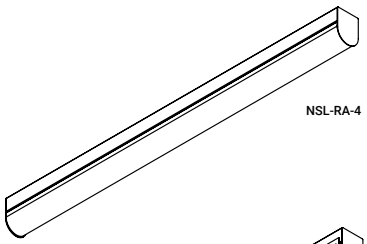

**NSL-RA-4**

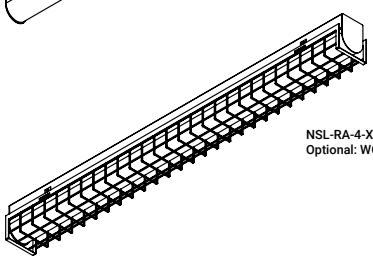

**NSL-RA-4-XX-XXK-X-WG-XX-XX**
**Optional: WG** = Wireguard

**NSL-RA-4**

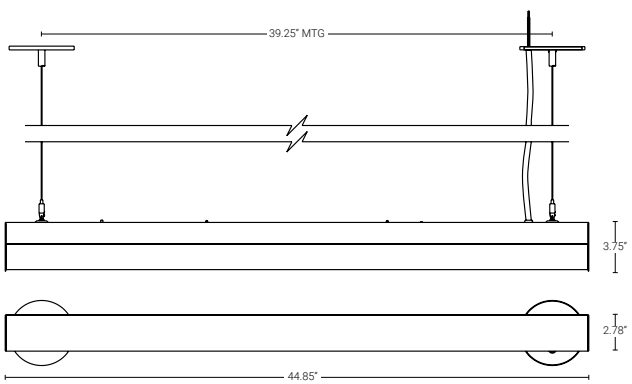


**NSL-RA-8**

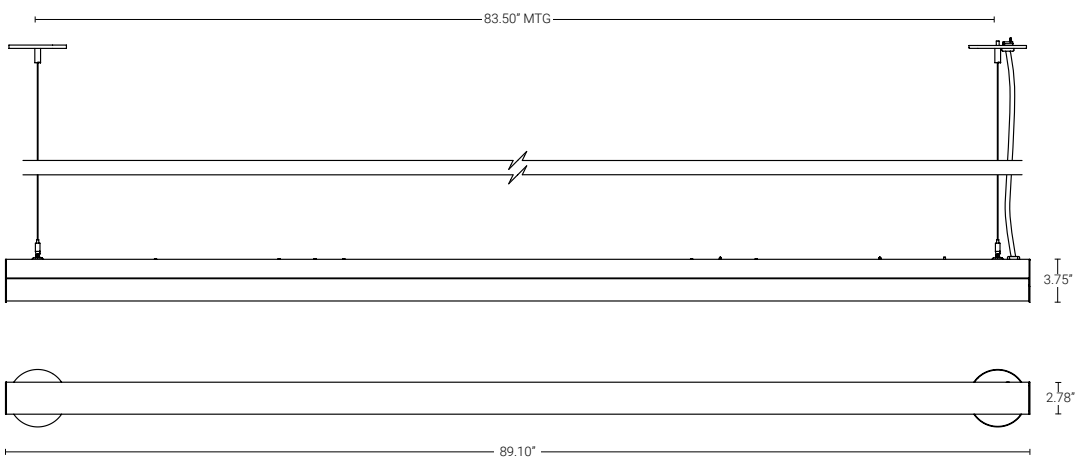


**Head Office - Montreal, Québec**
Tel.: (514) 595-1671
Email: info@peerless-electric.com

**Toronto, Ontario**
Tel.: (416) 751-5644
Email: info@peerless-electric.com

**Western Canada**
Tel.: (403) 479-5943 / (514) 595-1671
Email: tkolody@peerless-electric.com

Specifications are subject to change. Please confirm latest specifications prior to placing order.

**Hazardous Area LED Lighting**
Champ® FMV LED Luminaires

**GUILLEVIN OTTAWA**
**PO# 2010-RON971364D**
**drawings issued 2018-06-22**

**FMV11LCY/UNV34 76 page 6**

CROUSE-HINDS SERIES

# Champ® FMV

## LED floodlights for harsh and hazardous areas





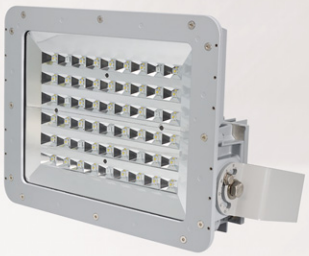



Type 402

EATON
Powering Business Worldwide



## Champ® FMV LED floodlights

Type 402

# Safe. Reliable. Efficient.

Featuring the industry's broadest range of LED luminaires for harsh, hazardous and industrial environments, Eaton's Crouse-Hinds can deliver a lighting solution that performs reliably in even the worst operating conditions. All the while reducing your energy, maintenance and manpower costs.

### Why LED?

**Energy efficiency**
LED average energy consumption is significantly less than traditional fluorescent and HID fixtures

**Start/restart time**
Instant illumination vs. 10 minute restrike time for HID

**Light quality**
Higher color rendering compared to fluorescent and HID

**Environmental benefits**
Mercury-free LED eliminates disposal costs and lower energy consumption for a smaller carbon footprint

### Why Crouse-Hinds?

**Industry-best reliability**
Built to withstand a wide array of applications

**Thermal management**
Effective heat sinking ensures longer life

**Quality of light**
Custom optics designed to maximize light distribution and intensity

**Globally certified**
Designed to global specifications for IEC and NEC applications

**Serviceable drivers**
Easy access to drivers for service or replacement

# Why FMV LED?

Type 402

**Reliable floodlights.** FMV LED luminaires are engineered to deliver high lumen output and maintenance-free long life in the toughest conditions.

### Versatile design

- Can be used for outdoor or indoor applications, and for a wide range of mounting heights depending on model and light level requirement

### Smaller and lighter

- 25% smaller footprint than previous model
- 10 lbs. (4.5 kg) less weight than previous model

### Full frame yoke

- Designed to utilize the SFA6 slipfitter and SWB6 wall mount bracket, making it ideal for retrofit or new installations



### High lumen output:

- Up to 117 lumens per watt
- Up to 72% energy savings over traditional HID fixtures (compared to 400W MH)



### Multiple lens options:

- Tempered clear glass lens standard
- Polycarbonate and diffused glass lens options available

### Rugged heat sink

- Heat sink designed to perform and provide maximum light levels in high ambient temperatures up to +65°C and as low as -40°C
- Thick walled castings make for a tough, rugged housing that keeps the internal driver and LED temperature down

## LED vs. HID savings at a glance

Why are so many facilities making the switch from HID to LED?

The numbers say it all.

**FMV13L/UNV1 vs. 400 watt HID**

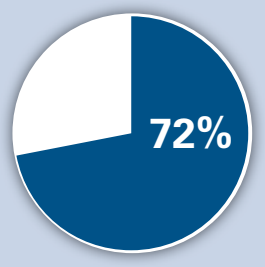


72% REDUCTION IN ENERGY COSTS

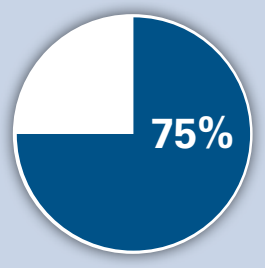


75% LOWER TOTAL COST OF OWNERSHIP




100% MAINTENANCE REDUCTION

**Assumptions:** Calculations based on overall life of the LED system. Energy cost of $.09 per kilowatt; 24 hour per day operation; labor rate of $75 each for 2 workers; average time for fixture maintenance of 1 hour.

# Features & specifications

### Champ FMV LED floodlights

Champ FMV LED floodlights are designed to provide full-spectrum, crisp, white light. Seven versions of the Champ FMV are available, from 3,000 to 15,000 lumens, providing ideal solutions for a wide range of harsh and hazardous applications.

**Up to 75% reduction in energy costs and 150,000 hours of continuous operation.**

| Model number | Nominal lumens* | Wattage | Lumens per watt | Equivalent HID luminaire |
|---|---|---|---|---|
| **FMV3L** | 3,189 | 28 | 114 | 70W-100W |
| **FMV5L** | 5,183 | 45 | 115 | 100W-150W |
| **FMV7L** | 7,095 | 62 | 114 | 150W-175W |
| **FMV9L** | 9,132 | 79 | 116 | 175W-250W |
| **FMV11L** | 11,107 | 99 | 112 | 250W-400W |
| **FMV13L** | 13,100 | 112 | 117 | 400W |
| **FMV15L** | 15,181 | 131 | 116 | 450W |

*Tolerance +/- 10%; @120 VAC, 25°C ambient, 7x6 optics.

### Applications:

- Oil and gas refineries, drilling rigs, petrochemical facilities, food and beverage facilities, platforms, loading docks, tunnels, outdoor wall and stanchion mounted general area lighting, and where flammable vapors, gases, ignitable dusts, fibers or flyings are present
- Locations requiring continuous and consistent light levels in extreme ambient temperatures
- Where extremely corrosive, wet, dusty, hot and/or cold conditions exist
- IP66, Type 4X, marine, wet locations and hose-down environments
- Classified and hazardous locations

### LED system:

- Cool white (5000K, 70 CRI) and warm white (3000K, 80 CRI)
- Custom designed optics – 7x6 standard, 3x3 optional (3L-11L)

### Champ FMV LED benefits:

- Instant illumination and restrike
- Better visibility with crisp, white light
- Cold temperature operation / no warm-up required
- Minimum T3C temperature rating – safely operate in the most hazardous environments and any non-hazardous location
- Serviceable drivers
- Easy installation – yoke design to mount to SFA6
- Energy-efficient technology – up to 72% energy savings over HID fixtures
- 60,000 hours of rated life at 55°C – eliminates need for frequent lamp replacement
- Contains no mercury or other hazardous substances
- Shock- and vibration-resistant solid-state luminaires have no filaments or glass components that could break – greatly reduces the risk of premature failure
- Operating ambient -40°C to 65°C (NEC only; IEC -40°C to 55°C)
- 5 year fixture warranty‡

‡Extension of standard terms and conditions to five years. Refer to page 2 of the D-0914 authorized distributor price book for Crouse-Hinds standard Terms and Conditions.

### LED system lifetime rated versus economic life:

Type 402

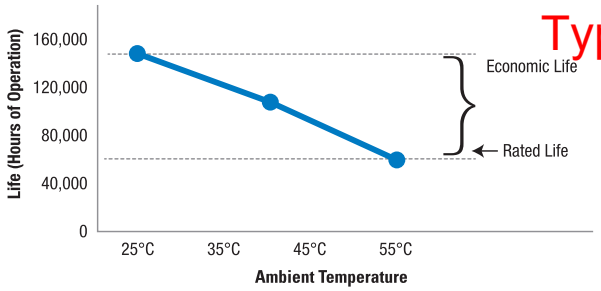


**Economic life can range anywhere between 50,000 to 150,000 hours, or 5 to 20 years of maintenance-free operation.**

**Fixture life and years of maintenance-free operation**

| Ambient temperature | Fixture life (hours) | No. of years at 24 hours usage | No. of years at 12 hours usage |
|---|---|---|---|
| 25°C | 150,000 | 17 | 34 |
| 40°C | 90,000 | 10 | 20 |
| 55°C | 60,000 | 7 | 14 |

*50,000 hours of life at 65°C ambient.

### Fixture life:

- Rated life of 60,000 hours @ 55°C operating ambient and 24/7 continuous operation for 365 days
- Economic life of 150,000 hours @ 25°C ambient
- L70 LED life >300,000 hours @ 55°C

### Electrical ratings:

| Model number | Input power (watts) | Input amps at 120-277 VAC |
|---|---|---|
| **FMV3L** | 28.0 - 29.1 | 0.24 - 0.11 |
| **FMV5L** | 45.4 - 45.8 | 0.38 - 0.18 |
| **FMV7L** | 61.8 - 62.5 | 0.52 - 0.24 |
| **FMV9L** | 78.8 - 80.3 | 0.66 - 0.31 |
| **FMV11L** | 98.8 - 99.9 | 0.83 - 0.37 |
| **FMV13L** | 111.8 - 112.4 | 0.94 - 0.42 |
| **FMV15L** | 131.4 - 131.5 | 1.10 - 0.48 |

| FMV3L - FMV15L | |
|---|---|
| **Voltage range, VAC*** | 100-277V @ 50/60 Hz, 347-480V @ 50/60 Hz |
| **Voltage range, VDC*** | 108-250V |
| **Power factor** | >0.9 |

*NEC voltage; see drivers below for IEC voltage.

### Standard materials:

- Lamp housing and adapter – die cast aluminum with Corro-free™ epoxy powder coat
- Lens – heat- and impact-resistant glass (standard)
- Gaskets – silicone and neoprene
- External hardware – stainless steel

### Qualifications and compliances:

- DesignLights Consortium® Qualified (some models are not DLC qualified)*

* Approved models include: FMV3L/UNV1; FMV5L/UNV1; FMV7L/UNV1; FMV9L/UNV1; FMV11L/UNV1; FMV13L/UNV1; FMV3L/UNV34; FMV5L/UNV34; FMV7L/UNV34; FMV9L/UNV34; FMV11L/UNV34; FMV13L/UNV34

7x6 optics on all approved models; 3x3 optics not DLC approved.

Refer to www.designlights.org Qualified Products List under family models for full listing details. Not all models are approved for all application categories.

**Certifications and compliances:**

# Type 402

**NEC and CEC:**

- Class I, Division 2, Groups A, B, C, D; Class I, Zone 2; Class II, Groups E, F, G; Simultaneous Presence; Class III
- Type 4X, IP66

**UL Standards:**

- UL844; UL1598; UL1598A; UL8750

**CSA Standard:**

- CSA C22.2 No. 137

**IEC Standards:**

- IECEx UL 15.0029
- Ex nA IIC T5 Gc Tamb -40°C to +40°C
- Ex nA IIC T4 Gc Tamb -40°C to +55°C
- Ex tb IIIC T65 Db Tamb -40°C to +40°C
- Ex tb IIIC T80 Db Tamb -40°C to +55°C

**ATEX/CE:**

- CE 0359 DEMKO 15 ATEX 1377
- CE 0359 DEMKO 15 ATEX 1383
- Ex II 3 G Ex nA IIC T5 Gc Tamb -40°C to +40°C
- Ex II 3 G Ex nA IIC T4 Gc Tamb -40°C to +55°C
- Ex II 2 D Ex tb IIIC T65 Db Tamb -40°C to +40°C
- Ex II 2 D Ex tb IIIC T80 Db Tamb -40°C to +55°C



**Temperature codes:**

| Model | Ambient temperature | Class I, Div. 2 | Class II, Div. 1 | Simultaneous rating Class I, Div. 2, Div. 1 | Class I, Zone 2 | ATEX 3G | ATEX 2D | Minimum wire temperature |
|---|---|---|---|---|---|---|---|---|
| FMV3L-FMV15L | 40°C | T5 | T4 | T4 | T5 | T5 | T65 | 90°C |
| | 55°C | T4A | T3C | T3C | T4 | T4 | T80 | 90°C |
| | 65°C | T4A | T3C | T3C | T4 | – | – | 90°C |

**Weights and dimensions:**

| Model number | Lbs. | Kg. | Width in. | Width mm. | Height in. | Height mm. | Depth in. | Depth mm. |
|---|---|---|---|---|---|---|---|---|
| FMV3L-FMV7L | 30.7 | 13.9 | 15.5 | 393.7 | 12.0 | 304.8 | 7.0 | 177.8 |
| FMV9L-FMV15L | 31.8 | 14.4 | 15.5 | 393.7 | 12.0 | 304.8 | 7.0 | 177.8 |

**Drivers:**

| Option | FMV3L - FMV15L |
|---|---|
| /UNV1 | NEC: 100-277 VAC, 50/60 Hz; 108-250 VDC<br>IEC: 100-252 VAC, 50/60 Hz; 111-227 VDC |
| /UNV34 | NEC: 347-480 VAC, 50/60 Hz<br>IEC: 385-436 VAC, 50/60 Hz |

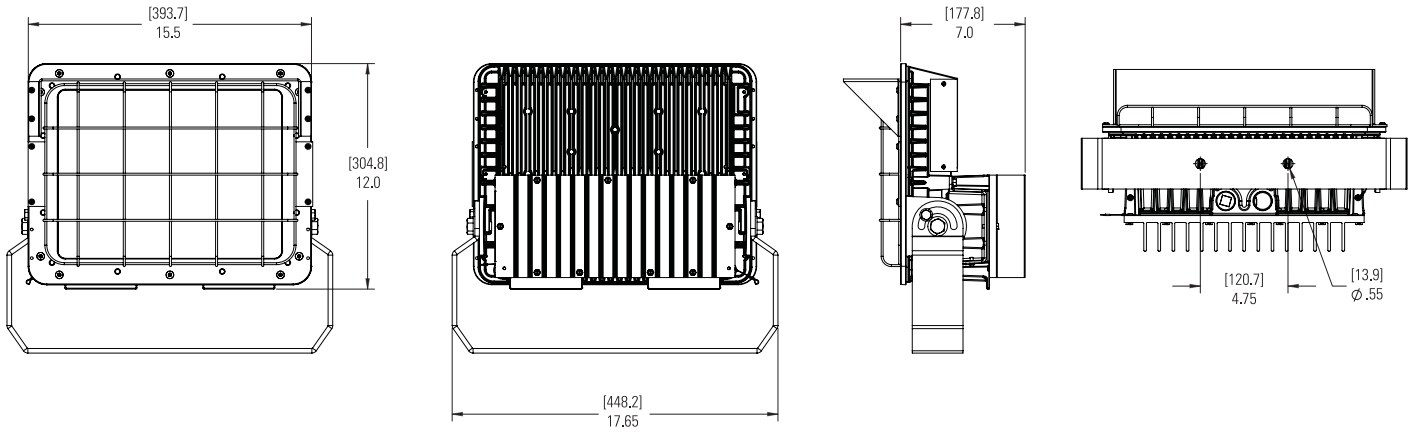

# Ordering information

**GUILLEVIN OTTAWA**
**PO# 2010-RON971364D**
**drawings issued 2018-06-22**

**FMV11LCY/UNV34 76**

**Part number example**

~~FMV5LCY/UNV1D 76 S903~~

~~FMV 5L C Y /UNV1 D 76 S903~~

**Model**

| | |
|---|---|
| FMV | NEC & IEC model |

**Mount**

| | |
|---|---|
| Y | Yoke |

**Options**

| | |
|---|---|
| S886 | Two TMCX cable glands of like thread installed |
| S891 | Diffused glass lens |
| S903 | Polycarbonate lens |

**Light source/intensity**

| | |
|---|---|
| 3L | 3,189 nominal lumens* |
| 5L | 5,183 nominal lumens* |
| 7L | 7,095 nominal lumens* |
| 9L | 9,132 nominal lumens* |
| 11L | 11,107 nominal lumens* |
| 13L | 13,100 nominal lumens* |
| 15L | 15,181 nominal lumens* |

*7x6 model.

**Entries**

| | |
|---|---|
| BLANK | ¾" NPT |
| M20 | 20mm entry |
| M25 | 25mm entry |

**Color temperature**

| | |
|---|---|
| C | 5000K, 70 CRI (cool white) |
| W | 3000K, 80 CRI (warm white) |

**Optical distribution**

| | |
|---|---|
| 76 | 7x6 floodlight pattern optics |
| 33* | 3x3 floodlight pattern optics |

*3L - 11L only.

**Voltage**

| | |
|---|---|
| /UNV1 | 100-277 VAC, 50/60 Hz; 108-250 VDC |
| /UNV34 | 347-480 VAC 50/60 Hz |

**Dimming**

| | |
|---|---|
| D* | Dimmable driver |
| BLANK | Non-dimmable driver |

*Dimmable driver option only available for NEC rated models.

**Accessories (ordered separately)**

| | |
|---|---|
| DSV2 | Bolt-on visor |
| P62 | Bolt-on wire guard |
| SC831 | Safety cable |
| SFA6 | Floodlight slipfitter |
| SWB6 | Slipfitter wall mount adapter |

Type 402

STANTEC PROJECT #: 110126045

This review by Stantec is for general conformance with the design concept of Stantec's design of the:
☐ Architectural ☐ Structural ☐ Mechanical ☑ Electrical ☐ Other

component(s) only and does not mean that Stantec has verified or approves the shop drawing(s). The Contractor remains solely responsible for the shop drawing(s) and this review by Stantec does not relieve the Contractor of the Contractor's responsibility for errors or omissions in the shop drawing(s) or for meeting all requirements of the contract documents. This review does not mean that Stantec approves the detailed design inherent in the shop drawing, responsibility for which shall remain with the Contractor submitting same, nor does this review mean that Stantec accepts any deviation of the shop drawing(s) from the contract documents. The Contractor is responsible for confirming all dimensions and correlating them at the job site, for all construction means, methods and techniques, and for coordination of construction work of all trades, including coordination of all shop drawings.

SUBMITTAL # ELE-004 Lighting

Stantec

☑ REVIEWED
☐ REVIEWED, AS NOTED
☐ REVISE AND RESUBMIT
☐ NOT REVIEWED

DATE June 26, 2018

BY Chester Martinez, E.I.T.

# Photometric data

Type 402

## 7x6 optics

**FMV13L Height: 40 ft.; Tilt angle: 45°**

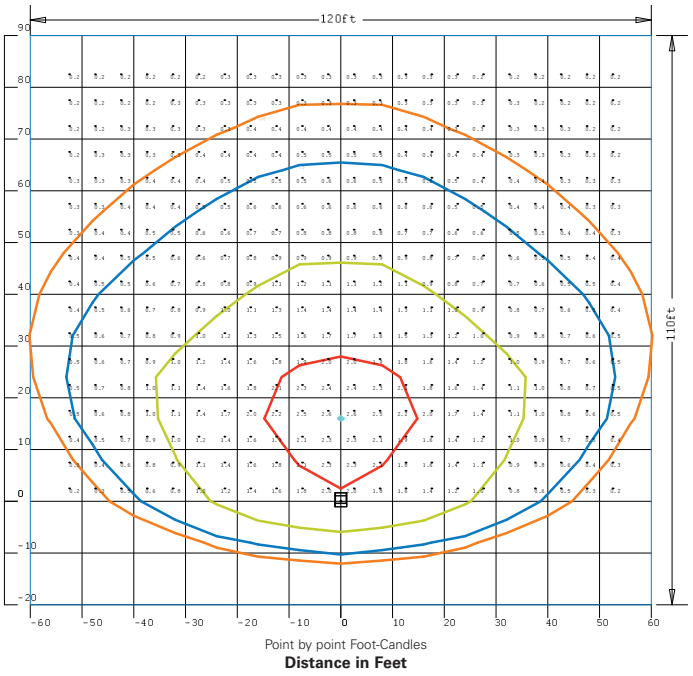


**Effective projected area (ft.-sq.):**

| Position | FMV3L - FMV15L |
|---|---|
| @ 0° Tilt | 1.5 |
| @ 45° Backwards tilt | 1.1 |
| @ 60° Forward tilt | 0.8 |

**Lumen output for glass lens models**

| Optic | FMV3L | FMV5L | FMV7L | FMV9L | FMV11L | FMV13L | FMV15L |
|---|---|---|---|---|---|---|---|
| 7x6 | 3,189 | 5,183 | 7,095 | 9,132 | 11,107 | 13,100 | 15,181 |
| 3x3 | 3,064 | 5,038 | 7,000 | 8,962 | 10,917 | – | – |

**Lumen output for diffused glass lens (S891) models**

| Optic | FMV3L | FMV5L | FMV7L | FMV9L | FMV11L | FMV13L | FMV15L |
|---|---|---|---|---|---|---|---|
| 7x6 | 2,637 | 4,287 | 5,878 | 7,459 | 8,994 | 10,613 | 12,445 |
| 3x3 | 2,546 | 4,179 | 5,806 | 7,433 | 9,055 | – | – |

**Lumen output for polycarbonate lens (S903) models**

| Optic | FMV3L | FMV5L | FMV7L | FMV9L | FMV11L | FMV13L | FMV15L |
|---|---|---|---|---|---|---|---|
| 7x6 | 3,017 | 4,903 | 6,712 | 8,639 | 10,507 | 12,393 | 14,361 |
| 3x3 | 2,924 | 4,808 | 6,680 | 8,552 | 10,418 | – | – |

## 3x3 optics

**FMV11L Height: 30 ft.; Tilt angle: 45°**

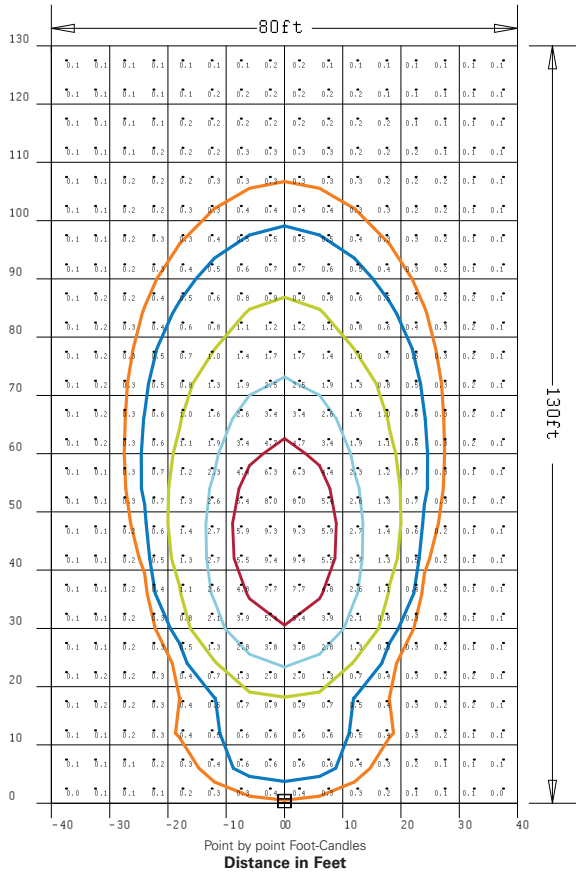




Higher average footcandles/lux, uniformity and distribution coverage with 72% less energy consumption compared to 400W metal halide.

# Type 402


**U.S. (global headquarters): Eaton's Crouse-Hinds business**

1201 Wolf Street
Syracuse, NY 13208

(866) 764-5454
FAX: (315) 477-5179
FAX Orders Only:
(866) 653-0640

crousecustomerctr@eaton.com

**Canada**

Toll Free: 800-265-0502
FAX: (800) 263-9504
FAX Orders only: (866) 653-0645

**Eaton Middle East**

9714-8066100
FAX: 9714-8894813

chmesales@eaton.com

**Korea**

82-2-3484-6783
82-2-3484-6778

CCHK-sales@
cooperindustries.com

**Mexico/Latin America/Caribbean**

52-555-804-4000
FAX: 52-555-804-4020

ventascentromex@eaton.com

**Singapore**

65-6645-9888
FAX: 65-6297-4819

chsi-sales@
cooperindustries.com

**Australia**

61-2-8787-2777
FAX: 61-2-9609-2342

CEASales@
cooperindustries.com

**Europe (Germany)**

49 (0) 6271 806-500
49 (0) 6271 806-476

sales.CCH.de@
cooperindustries.com

**China**

86-21-2899-3600
FAX: 86-21-2899-4055

cchsales@
cooperindustries.com

**India**

91-124-4683888
FAX: 91-124-4683899

cchindia@eaton.com


**For more information:**

If further assistance is required, please contact an authorized Eaton Distributor, Sales Office, or Customer Service Department.


**Eaton's Crouse-Hinds**
1201 Wolf Street
Syracuse, NY 13208
Crouse-Hinds.com

**Eaton**
1000 Eaton Boulevard
Cleveland, OH 44122
United States
Eaton.com



© 2015 Eaton
All Rights Reserved


Printed in USA
Publication No. 5242-1215
December 2015



Eaton is a registered trademark.

All other trademarks are property of their respective owners.


Powering Business Worldwide

**GUILLEVIN OTTAWA**
**PO# 2010-RON971364D**
**drawings issued 2018-06-22**

**VMV5L2A/UNV34 page 8**

# Champ® VMV

## LED luminaires for hazardous areas



## 3,000 to 25,000 lumen LED high bay luminaires



Type 403

EATON
*Powering Business Worldwide*



Champ® VMV LED

# Safe. Reliable. Efficient.

Type 403

Featuring the industry's broadest range of LED luminaires for harsh, hazardous and industrial environments, Eaton's Crouse-Hinds can deliver a lighting solution that performs reliably in even the worst operating conditions. All the while reducing your energy, maintenance and manpower costs.

## Why LED?

**Useful life**
Rated life is up to 60,000 hours of maintenance-free and safe operation

**Energy efficiency**
LED average energy consumption is significantly less than traditional fluorescent and HID fixtures

**Start/restart time**
Instant illumination versus 10 minute restrike time for HID

**Light quality**
Higher color rendering compared to fluorescent and HID

**Environmental benefits**
Mercury-free LED eliminates disposal costs and lower energy consumption for a smaller carbon footprint

## Why Crouse-Hinds?

**Rugged design**
Built to withstand extreme temperatures, vibration, water and dust

**High efficacy**
Up to 124 lumens per watt (model dependent)

**Thermal management**
Effective heat sinking ensures longer life

**Quality of light**
Custom optics designed to maximize light distribution and intensity

**Versatile mounting**
LED fixtures are compatible with Crouse-Hinds' HID installed base

# Why Champ VMV LED? Type 403

**Rugged mid to high bay solutions.** Champ VMV LED luminaires are engineered to provide maintenance-free operation while delivering long life and high lumen performance.



**Built to last:**

- Type 4X rated
- Impact-resistant lens sealed from the outside environment provides ingress protection against water and dust
- Die cast aluminum LED housing provides efficient thermal path to heat sink assembly
- Vertical fin design facilitates air flow and dust shedding

**Simple installation and replacement:**

- Contractor-friendly design is ideal for both retrofit and new construction
- Easy to retrofit using existing HID Champ mounting module
- Compact modular design for easy component replacement and future upgrades
- Available with lever lock connectors and standard three-pole terminal block



**Custom optics:**

- Type I, III and V optics designed to maximize light distribution and intensity*

* Type V optics standard.

**Increased efficiency and durability:**

- Up to 124 lumens per watt
- Economic life: 7-20 years



VMV3L-VMV11L

**optimized for 8-30 foot mounting heights**



VMV13L & VMV17L



VMV21L & VMV25L

**optimized for 30-60 foot mounting heights**

## LED vs. HID savings at a glance

Why are so many facilities making the switch from HID to LED?

The numbers say it all.

**VMV7L vs. 175 Watt MH**

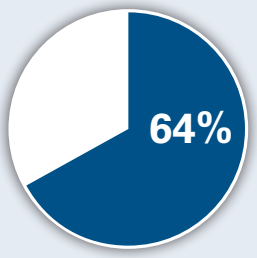


64% REDUCTION IN ENERGY COSTS

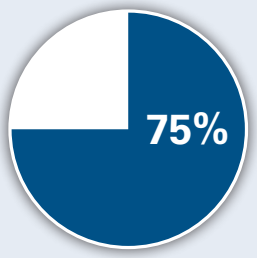


75% LOWER TOTAL COST OF OWNERSHIP




100% MAINTENANCE REDUCTION

**Assumptions:** Calculations based on overall life of the LED system. Energy cost of $.09 per kilowatt; 24 hour per day operation; labor rate of $75 each for 2 workers; average time for fixture maintenance of 1 hour.

# Custom optics

Eaton's Crouse-Hinds continuously focuses on engineering product solutions tailored to our customers' unique needs and applications.

Champ VMV LED luminaires feature custom optics designed to maximize light distribution and intensity, providing flexibility for retrofits or new installations throughout the site.



Type III optics minimize light spillover onto the walls and direct light to the ground.

## Three optical options to maximize light distribution and intensity



VMV3L - VMV11L



Type I



Type III



Type V



### TYPE I

Long and rectangular for hallways, walkways, loading docks, catwalks.

Ideal for:

- Mining conveyor belts
- Aisleways and hallways
- Catwalks and walkways
- Ramps and loading docks
- Tunnels with overhead mounts

### TYPE III

Wall mount light distribution, minimizing spillover on the wall.

Ideal for:

- Narrow crosswalks or passages with wall mounted fixtures
- Tunnels with wall mount
- Wall or stanchion mount requiring 180° forward throw beam patterns

### TYPE V

Regular circular distribution pattern for high/low bay indoor and outdoor ceiling or pendant mount lighting.

Ideal for:

- Pendant, ceiling or stanchion mount overhead building mounts
- Processing mills, industrial plants, large buildings, warehouses, etc.

**Colored LED options:**

- Available in green and amber*
- Reduction in light pollution for night space observation and sky glow due to isolating blue wavelength in red and amber colors
- Wildlife-friendly
- Improves visibility for telescopes in observatories during night sky space exploration

* Custom optics not available with colored LEDs. One model per color, see assignment sheet.

Type 403

# Case study: Type I optics

Type 403

### Catwalk/conveyor lighting

Utilizing Eaton's Crouse-Hinds lighting layout services, Champ VMV luminaires with Type I optics and HID luminaires are shown installed on a catwalk to compare photometrics.

### Comparison

**Champ Type I LEDs have a wider linear pattern** than equivalent HID luminaires and provide more efficient light dispersion, which fully illuminates the catwalk.

### Results

**Champ VMV LED with Type I optics** provides superior illumination along the conveyor and walkway safely. With no gaps in illumination, the optical pattern allows for increased spacing of fixtures and a safer conveyor system.

### Savings realized

- **Champ Type I pattern allows for greater fixture spacing** along the catwalk or conveyor system
- Increased visibility with no dark spots results in safer conditions for workers
- LED system provides between 7 to 20 years of maintenance-free operation
- Up to 64% energy savings over the life of the fixture

**Champ® Gen III w/ Type I Optics**

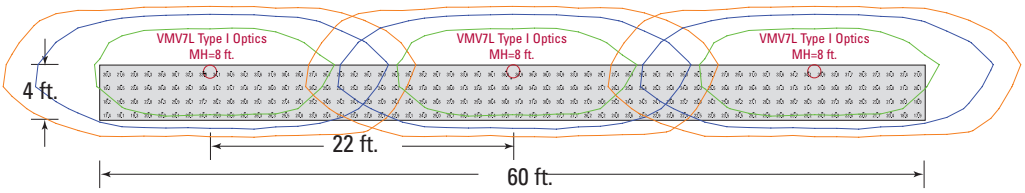


**175W Metal Halide w/ Type I Optics**

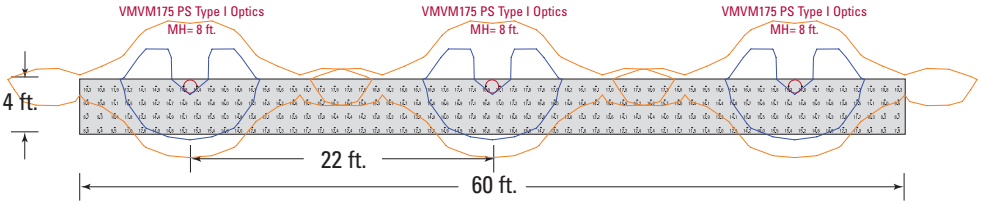


| Luminaire | Calc. Type | Units | Avg. | Max. | Min. | Avg./Min. | Max./Min. |
|---|---|---|---|---|---|---|---|
| **Champ VMV** | Illuminance | Fc | 26.91 | 36.9 | 17.4 | 1.55 | 2.12 |
| **175W MH** | Illuminance | Fc | 14.32 | 18.0 | 7.9 | 1.81 | 2.28 |

## Champ VMV has broader coverage area, higher delivered footcandles and uniformity for a typical catwalk or conveyor application.

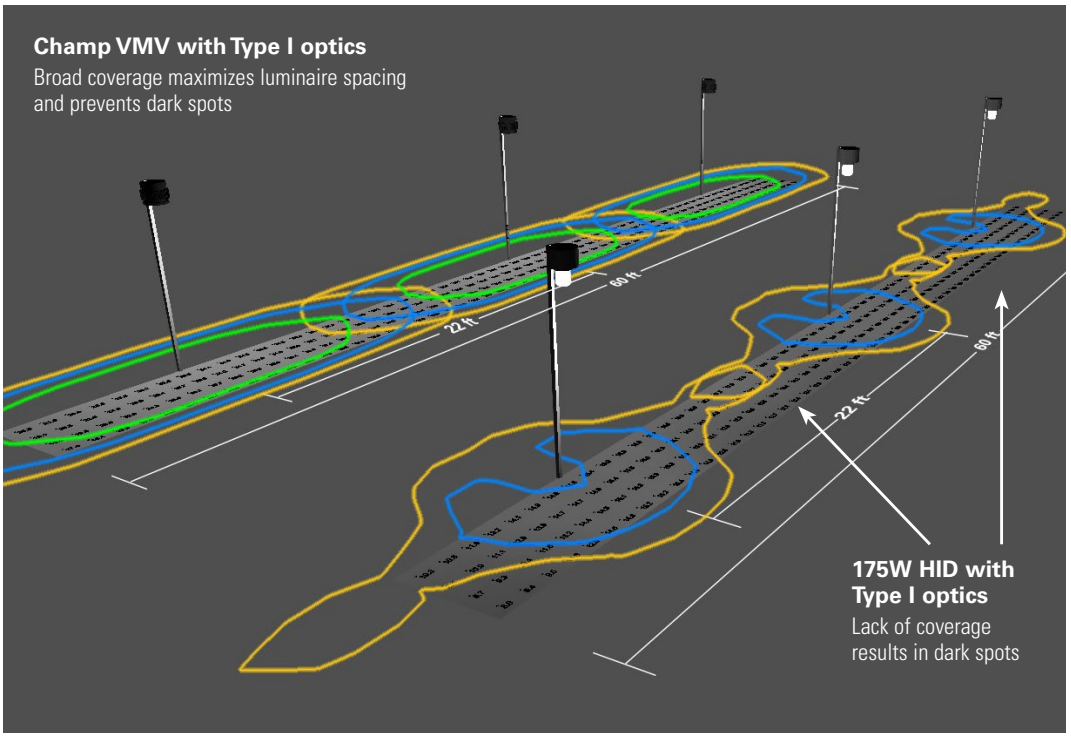


**Lighting layout & design services:**

Let us help you design your next big project!

**Contact Crouse-Hinds Customer Service**
crousecustomerctr@eaton.com
(866) 764-5454

# Champ VMV Series LED Luminaires

Champ VMV Series LEDs are designed to provide full-spectrum, crisp, white light with custom IES Type I, III and V distribution.

| Model | Typical lumens (Type V)* | Wattage | Lumens per watt | Equivalent HID luminaire | Typical energy savings / lifetime |
|---|---|---|---|---|---|
| **VMV3L** | 3,531 | 29 | 122 | 70W-100W | Up to 77% |
| **VMV5L** | 5,335 | 43 | 124 | 100W-150W | Up to 67% |
| **VMV7L** | 7,195 | 62 | 116 | 150W-175W | Up to 67% |
| **VMV9L** | 9,266 | 85 | 109 | 250W-320W | Up to 74% |
| **VMV11L** | 11,440 | 113 | 101 | 320W-400W | Up to 74% |
| **VMV13L** | 13,226 | 130 | 102 | 400W | Up to 68% |
| **VMV17L** | 18,793 | 168 | 112 | 400W-600W | Up to 72% |
| **VMV21L** | 22,110 | 196 | 113 | 600W-750W | Up to 74% |
| **VMV25L** | 26,531 | 232 | 114 | 750W-1000W | Up to 77% |

* Tolerance +/- 10%.

## Applications:

- For areas with mounting heights of 8-60 feet
- Oil and gas refineries, drilling rigs, petrochemical facilities, food and beverage facilities, platforms, loading docks, tunnels, indoor/outdoor spotlighting, outdoor wall and stanchion mounted general area lighting, and where flammable vapors, gases, ignitable dusts, fibers or flyings are present
- Locations requiring continuous and consistent light levels in extreme ambient temperatures
- Where extremely corrosive, wet, dusty, hot and/or cold conditions exist
- Classified and hazardous locations

## Champ VMV benefits:

- Instant illumination and restrike
- Cold temperature operation / no warm-up required
- Option for redundancy in drivers with multiple series circuits connected to each driver to avoid complete loss of illumination
- Easy installation - compact modular fixture attaches onto existing Champ mounting module
- Energy-efficient technology - up to 64% energy savings over HID fixtures
- Contains no mercury or other hazardous substances
- Shock- and vibration-resistant solid-state luminaires have no filaments or glass components that could break - greatly reduces the risk of premature failure
- Operating ambient: -40°C to 65°C (VMV3L-VMV11L models); -40°C to 55°C (VMV13L-VMV25L models)
- 5 year fixture warranty†

† Refer to page 2 of the D-0914 authorized distributor price book for Crouse-Hinds standard Terms and Conditions.

## LED system:

- High intensity discrete power emitters
- Standard: cool white (5000K, 70 CRI)
  Optional: warm white, (3000K, 80 CRI)
- Custom Type I, III and V optics available
- Optics clocking in field to align Type I and Type III light patterns to illumination path for VMV13L-VMV25L

## LED system lifetime rated versus economic life:

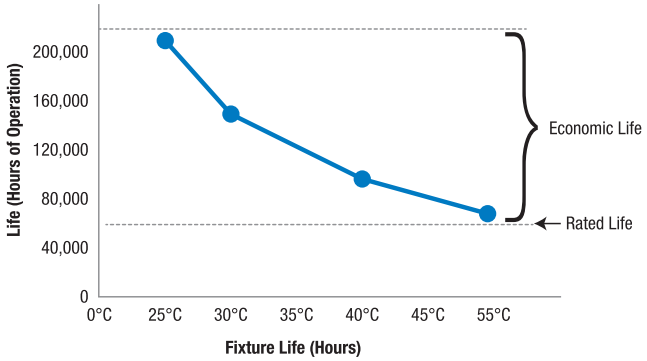


**Economic life can range anywhere between 64,000 to 200,000 hours, or 7 to 20 years of maintenance-free operation.**

**Fixture life and years of maintenance-free operation**

| Ambient temperature | Fixture life (hours) | No. of years at 24 hours usage | No. of years at 12 hours usage |
|---|---|---|---|
| 25°C | 201,008 | 23 | 46 |
| 30°C | 153,445 | 17 | 35 |
| 40°C | 94,949 | 11 | 22 |
| 55°C | 64,286 | 7 | 15 |

* 50,000 hrs of life at 65°C ambient for VMV3L-VMV11L/UNV1 models.

## Fixture life:

- Rated life of 60,000 hours @ 55°C operating ambient and 24/7 continuous operation for 365 days
- Economic life of 200,000 hours @ 25°C ambient
- L70 >300,000 hours @ 55°C

## Drivers

| Option | Voltage: VMV3L-VMV25L |
|---|---|
| /UNV1 | 120-277 VAC, 50/60 Hz; 108-250 VDC, 50/60 Hz |
| /UNV34 | 347-480 VAC, 50/60 Hz |

## Standard materials:

- Lamp housing and adapter - die cast aluminum with Corro-free™ epoxy powder coat
- Lens - heat- and impact-resistant glass
- Gaskets - silicone
- External hardware - stainless steel
- Factory-sealed, no external seals required

## Qualifications and compliances:

- DesignLights Consortium® Qualified (some models are not DLC qualified)*

Type 403

* Approved models include: VMV3L/UNV1; VMV5L/UNV1; VMV7L/UNV1; VMV9L/UNV1; VMV11L/UNV1; VMV13L/UNV1; VMV17L/UNV1; VMV21L/UNV1; VMV25L/UNV1; VMV3L/UNV34; VMV5L/UNV34; VMV7L/UNV34; VMV9L/UNV34; VMV11L/UNV34.

Refer to www.designlights.org Qualified Products List under family models for full listing details. Not all models are approved for all application categories.

## Certifications and compliances:

Type 403

### NEC and CEC

- Class I, Division 2, Groups A, B, C, D; Class I, Zone 2, nA nR; Class II, Groups E, F, G; Class III
- Zone 21 tb
- Simultaneous Presence
- Wet Locations, NEMA 4X, IP66

### UL Standards

- UL844; UL1598 Luminaires; UL1598A Marine; UL8750; UL50; UL50E

### CSA Standard

- cUL Listed to CSA Standard CSA C22.2 No. 137

### IEC**

- IEC 60079-0:2011; IEC 60079-15:2010; IEC 60079-31:2008; IEC 60598-2-1:1979; IEC 60529:2001
- Ex nA nR IIC T* Gc -40 to +40
- Ex nA nR IIC T* Gc -40 to +55
- Ex nA nR IIC T* Gc -40 to +65
- Ex tb IIIC T*°C Db -40 to +40
- Ex tb IIIC T*°C Db -40 to +55
- Ex tb IIIC T*°C Db -40 to +65

### VMV3L-VMV11L only

- IECEx UL 13.0052X

### VMV13L-VMV25L only

- IECEx UL 14.0031X

### ATEX/CE**

- EN 60079-0:2012; EN 60079-15:2010; EN 60079-31:2009; EN 60598-2-1:1989; EN 60929:1991 +A1:2001
- Ⓔx II 3 G Ex nA nR IIC T* Gc -40 to +40
- Ⓔx II 3 G Ex nA nR IIC T* Gc -40 to +55
- Ⓔx II 3 G Ex nA nR IIC T* Gc -40 to +65
- Ⓔx II 2 D Ex tb IIIC T*°C Db IP66 -40 to +40
- Ⓔx II 2 D Ex tb IIIC T*°C Db IP66 -40 to +55
- Ⓔx II 2 D Ex tb IIIC T*°C Db IP66 -40 to +65

### VMV3L-VMV11L only

- DEMKO 13 ATEX 1475031X; DEMKO 13 ATEX 1305741X

### VMV13L-VMV25L only

- DEMKO 14 ATEX 1324722X; DEMKO 14 ATEX 2274231X

* See temperature code table below.

** VMV3L-VMV11L rated to +65°C, VMV13L-VMV25L rated to +55°C.

## Electrical ratings:

| | VMV3L | VMV5L | VMV7L | VMV9L | VMV11L |
|---|---|---|---|---|---|
| **Voltage range, VAC** | 120-277 | 120-277 | 120-277 | 120-277 | 120-277 |
| **Frequency** | 50/60 Hz | 50/60 Hz | 50/60 Hz | 50/60 Hz | 50/60 Hz |
| **Input power (watts)** | 29 | 43 | 62 | 85 | 113 |
| **Input amps at 120-277 VAC** | 0.24-0.11 | 0.35-0.16 | 0.52-0.23 | 0.71-0.31 | 0.95-0.41 |
| **Voltage range, VDC** | 108-250 | 108-250 | 108-250 | 108-250 | 108-250 |
| **Power factor** | >0.90 | >0.90 | >0.90 | >0.90 | >0.90 |
| **Total harmonic distortion (THD)** | <20% | <20% | <20% | <20% | <20% |
| **Nominal lumens† (Type V)** | 3,531 | 5,335 | 7,195 | 9,266 | 11,440 |

| | VMV13L | VMV17L | VMV21L | VMV25L |
|---|---|---|---|---|
| **Voltage range, VAC** | 120-277 | 120-277 | 120-277 | 120-277 |
| **Frequency** | 50/60 Hz | 50/60 Hz | 50/60 Hz | 50/60 Hz |
| **Input power (watts)** | 131 | 168 | 196 | 232 |
| **Input amps at 120-277 VAC** | 1.08-0.48 | 1.40-0.62 | 1.64-0.73 | 1.94-0.87 |
| **Voltage range, VDC** | 108-250 | 108-250 | 108-250 | 108-250 |
| **Power factor** | >0.90 | >0.90 | >0.90 | >0.90 |
| **Total harmonic distortion (THD)** | <20% | <20% | <20% | <20% |
| **Nominal lumens† (Type V)** | 13,226 | 18,793 | 22,110 | 26,531 |

† Tolerance +/- 10%.

## Weights:

| Luminaire | lbs. | kg. |
|---|---|---|
| **VMV3L-VMV11L** | 21.8 | 8.07 |
| **VMV13L & VMV17L** | 36.0 | 16.32 |
| **VMV21L & VMV25L** | 44.0 | 19.95 |

| Mounting module | lbs. | kg. |
|---|---|---|
| **Pendant** | 1.25 | 0.57 |
| **Cone pendant** | 4.00 | 1.81 |
| **Flexible pendant** | 1.50 | 0.68 |
| **Ceiling** | 2.75 | 1.25 |
| **Wall** | 4.50 | 2.04 |
| **Angled stanchion*** | 3.50 | 1.59 |
| **Straight stanchion** | 4.50 | 2.04 |

* Angled stanchion for VMV3L-VMV11L models only.

## Temperature codes:

| Lamp/lumen output | Driver type | Ambient temperature | Class I, Div. 2 | Class II, Div. I | Simultaneous rating Class I, Div. 2, Div. 1 | Class I, Zone 2 AEx nA nR; Ex nA nR | Class III, Div. 1 Class II, Div. 1, Groups E, F, G Zone 21 AEx tb IIIC |
|---|---|---|---|---|---|---|---|
| **3L, 5L, 7L, 9L, 11L** | /UNV1 | 40°C | T5 | T5 | T3C | T6 | T66°C |
| **3L, 5L, 7L, 9L, 11L** | /UNV1 | 55°C | T5 | T4A | T3A | T5 | T83°C |
| **3L, 5L, 7L, 9L, 11L** | /UNV1 | 65°C | T4A | T4A | T3A | T4 | T92°C |
| **3L, 5L, 7L, 9L, 11L** | /UNV34 | 40°C | T3C | T5 | T3C | T4 | T70°C |
| **3L, 5L, 7L, 9L, 11L** | /UNV34 | 55°C | T3A | T4A | T3A | T4 | T85°C |
| **3L, 5L, 7L, 9L, 11L** | /UNV34 | 65°C | T3A | T4A | T3A | T4 | T92°C |
| **13L, 17L** | /UNV1; UNV34 | 40°C | T4A | T5 | T4A | T6 | T66°C |
| **13L, 17L** | /UNV1; UNV34 | 55°C | T4 | T4A | T4 | T5 | T81°C |
| **21L, 25L** | /UNV1; UNV34 | 40°C | T4A | T5 | T4A | T6 | T71°C |
| **21L, 25L** | /UNV1; UNV34 | 55°C | T4 | T4A | T4 | T5 | T86°C |

# Ordering information

**GUILLEVIN OTTAWA**
**PO# 2010-RON971364D**
**drawings issued 2018-06-22**

**VMV5L2A/UNV34 page 8**

**Part number example**
~~VMV17LW2AR1G/UNV1 S890~~

**VMV 17L W 2A R1 G /UNV1 S890**

**Lamp/function**

| | |
|---|---|
| 3L | 3,531 lumen LED |
| 5L | 5,335 lumen LED |
| 7L | 7,195 lumen LED |
| 9L | 9,226 lumen LED |
| 11L | 11,440 lumen LED |
| 13L | 13,226 lumen LED |
| 17L | 18,793 lumen LED |
| 21L | 22,110 lumen LED |
| 25L | 26,531 lumen LED |
| GL* | Green (4,300 lumen LED) |
| AL* | Amber (5,000 lumen LED) |

* Custom optics not available with colored LEDs.

**Color temperature**

| | |
|---|---|
| BLANK | Cool (5000K), colored |
| W | Warm (3000K) |

**Mounting style**

| | |
|---|---|
| BLANK | No Cover |
| J* | 1-½" stanchion, 25° angled |
| P | 1-½" stanchion, straight |
| 2A | ¾" pendant |
| 3A | 1" pendant |
| 20A | 20mm pendant |
| 25A | 25mm pendant |
| 2B | ¾" cone pendant |
| 3B | 1" cone pendant |
| 2C | ¾" ceiling |
| 3C | 1" ceiling |
| 20C | 20mm ceiling |
| 25C | 25mm ceiling |
| 2HA | ¾" flexible pendant |
| 2TW | ¾" wall |
| 3TW | 1" wall |
| 20TW | 20mm wall |
| 25TW | 25mm wall |

* For VMV3L-VMV11L only.

**Suffixes**

| | |
|---|---|
| S812* | Trunnion mount kit with pin |
| S831** | Safety cable |
| S890 | Quick clip |
| S891** | Diffused lens |
| S892*** | Redundant driver |
| S896** | Teflon coated lens |
| S903 | Polycarbonate lens |
| TB6 | Six-pole terminal block |

* Order with ceiling mount only.
** Not available for IEC.
*** Available for 5L & 7L only. Redundant driver standard on 9L - 25L models.
7L = 6,616 lumens with S892 suffix.

**Voltage**

| | |
|---|---|
| /UNV1 | 120-277 VAC, 50/60 Hz; 108-250 VDC, 50/60 Hz |
| /UNV34 | 347-480 VAC, 50/60 Hz |

**Guard**

| | |
|---|---|
| BLANK | No guard |
| G | P3001 wire guard |

**Optics**

| | |
|---|---|
| BLANK | Type V optic standard *(all mounts)* |
| R1 | Type I optic *(all mounts minus ceiling for 3L-11L, available with mounts for 13L-25L models)* |
| R1A* | Type I optic *(ceiling with conduit 45° counterclockwise or 135° clockwise from hinge)* |
| R1B* | Type I optic *(ceiling with conduit 45° clockwise or 135° counterclockwise from hinge)* |
| R3 | Type III optic *(all mounts minus ceiling)* |
| R3AP* | Type III optic *(select when using Appleton® top hat adapter with Champ fixture)* |
| R3A1* | Type III optic *(ceiling with conduit 45° counterclockwise from top hat hinge)* |
| R3A2* | Type III optic *(ceiling with conduit 135° clockwise from top hat hinge)* |
| R3B1* | Type III optic *(ceiling with conduit 45° clockwise from top hat hinge)* |
| R3B2* | Type III optic *(ceiling with conduit 135° counterclockwise from top hat hinge)* |

*For VMV3L-VMV11L only.

Type 403

STANTEC PROJECT #: 110126045

SUBMITTAL # ELE-004 Lighting

This review by Stantec is for general conformance with the design concept of Stantec's design of the:
☐ Architectural ☐ Structural ☐ Mechanical ☑ Electrical ☐ Other

component(s) only and does not mean that Stantec has verified or approves the shop drawing(s). The Contractor remains solely responsible for the shop drawing(s) and this review by Stantec does not relieve the Contractor of the Contractor's responsibility for errors or omissions in the shop drawing(s) or for meeting all requirements of the contract documents. This review does not mean that Stantec approves the detailed design inherent in the shop drawing, responsibility for which shall remain with the Contractor submitting same, nor does this review mean that Stantec accepts any deviation of the shop drawing(s) from the contract documents. The Contractor is responsible for confirming all dimensions and correlating them at the job site, for all construction means, methods and techniques, and for coordination of construction work of all trades, including coordination of all shop drawings.

Stantec

☑ REVIEWED
☐ REVIEWED, AS NOTED
☐ REVISE AND RESUBMIT
☐ NOT REVIEWED

DATE June 26, 2018

BY Chester Martinez, E.I.T.

**Accessories (ordered separately)**

| | |
|---|---|
| D2S20 | Photocell, 120V, 50/60 Hz |
| D2S208 277 | Photocell, 208-277V |
| VMVL S812 K1* | Trunnion mount kit with pin |

* Order with ceiling mount only.

# Mounting options and dimensions

### Stanchion - 25° Angled

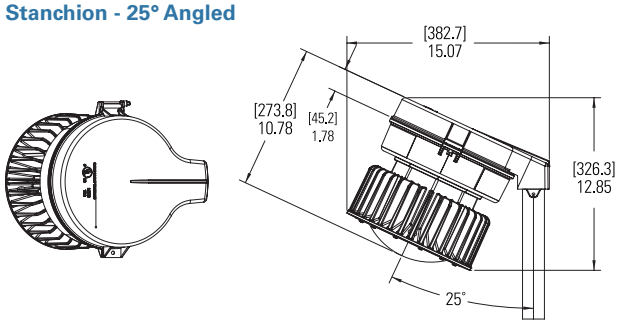


### Stanchion - Straight

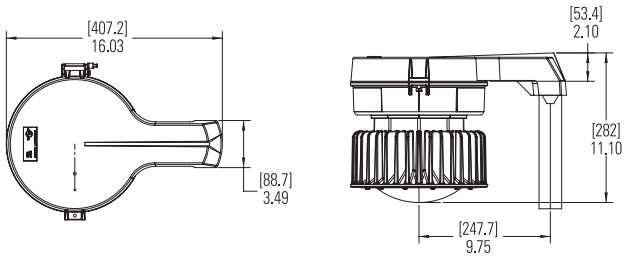


### Pendant

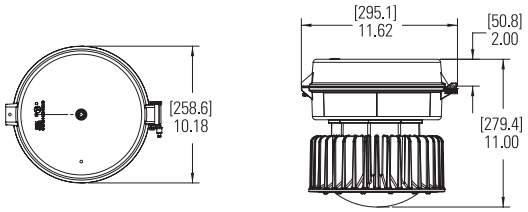


### Ceiling

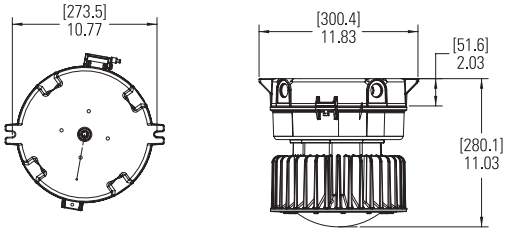


### Wall

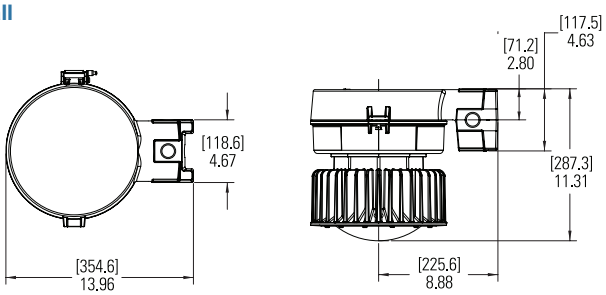


### Cone Pendant

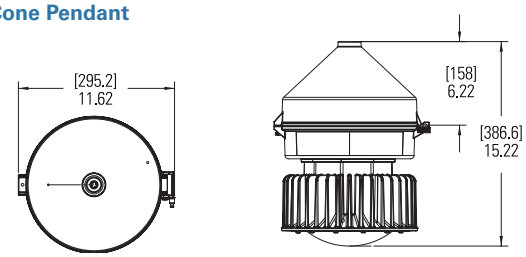


### Trunnion

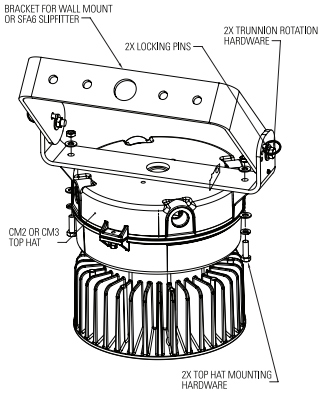


Type 403

# Photometric comparison at 15 ft. mounting height

Type 403

175W PSMH - Type I

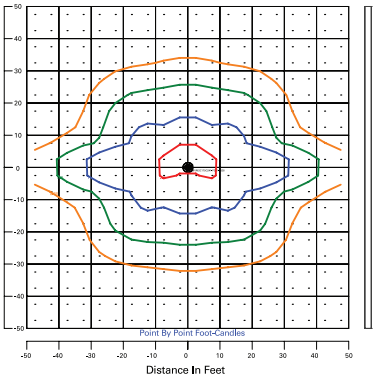


VMV7L - Type I

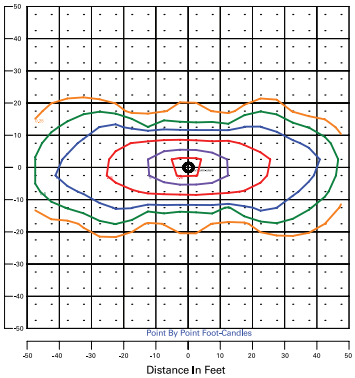


### Type I optical pattern

0.25 0.50 1.0 2.5 5.0

**Calculation summary**

| Label | Calc. type (in Fc) | Avg. | Max. | Min. |
|---|---|---|---|---|
| VMV 175W MH Grid | Illuminance | 0.45 | 2.8 | 0.0 |
| VMV LED Grid | Illuminance | 0.62 | 8.0 | 0.0 |

175W PSMH - Type III

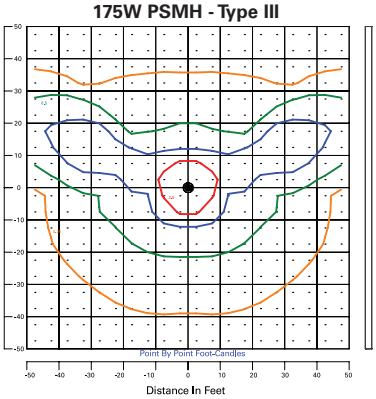


VMV7L - Type III

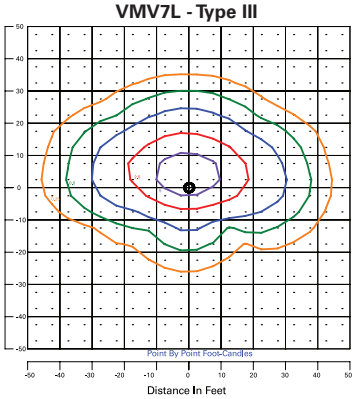


### Type III optical pattern

0.25 0.50 1.0 2.5 5.0

**Calculation summary**

| Label | Calc. type (in Fc) | Avg. | Max. | Min. |
|---|---|---|---|---|
| VMV 175W MH Grid | Illuminance | 0.53 | 3.2 | 0.1 |
| VMV LED Grid | Illuminance | 0.61 | 7.5 | 0.0 |

175W PSMH - Type V

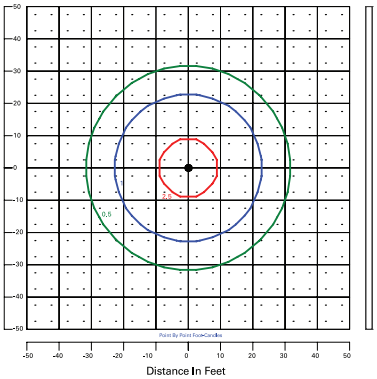


VMV7L - Type V

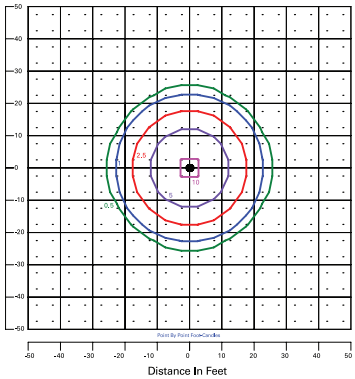


### Type V optical pattern

0.50 1.0 2.5 5.0 10.0

**Calculation summary**

| Label | Calc. type (in Fc) | Avg. | Max. | Min. |
|---|---|---|---|---|
| VMV 175W MH Grid | Illuminance | 0.51 | 2.8 | 0.1 |
| VMV LED Grid | Illuminance | 0.69 | 10.1 | 0.0 |

**Higher average footcandles, uniformity and distribution coverage with less than half the lumens and energy consumption compared to 175W metal halide**

| Actual lumens (nominal†) | VMV3L | VMV5L | VMV7L | VMV9L | VMV11L |
|---|---|---|---|---|---|
| Type I | 3,360 | 5,045 | 6,844 | 8,823 | 10,730 |
| Type III | 3,309 | 4,468 | 6,741 | 8,618 | 10,660 |
| Type V | 3,531 | 5,335 | 7,195 | 9,266 | 11,440 |

| Actual lumens (nominal†) | VMV13L | VMV17L | VMV21L | VMV25L |
|---|---|---|---|---|
| Type I | 12,842 | 18,194 | 21,404 | 25,685 |
| Type III | 12,493 | 17,699 | 20,822 | 24,987 |
| Type V | 13,266 | 18,793 | 22,110 | 26,531 |

† Tolerance +/- 10%.

# Type 403


**U.S. (global headquarters): Eaton's Crouse-Hinds business**

1201 Wolf Street
Syracuse, NY 13208

(866) 764-5454
FAX: (315) 477-5179
FAX Orders Only:
(866) 653-0640

crousecustomerctr@eaton.com

**Canada**

Toll Free: 800-265-0502
FAX: (800) 263-9504
FAX Orders only: (866) 653-0645

**Middle East (Dubai)**

971 4 8066100
FAX: 971 4 8894813

chmesales@eaton.com

**Korea**

82-2-3484-6783
82-2-3484-6778

CCHK-sales@
cooperindustries.com

**Mexico/Latin America/Caribbean**

52-555-804-4000
FAX: 52-555-804-4020

ventascentromex@eaton.com

**Singapore**

65-6645-9888
FAX: 65-6297-4819

chsi-sales@
cooperindustries.com

**Australia**

61-2-8787-2777
FAX: 61-2-9609-2342

CEASales@
cooperindustries.com

**Europe (Germany)**

49 (0) 6271 806-500
49 (0) 6271 806-476

sales.CCH.de@
cooperindustries.com

**China**

86-21-2899-3600
FAX: 86-21-2899-4055

cchsales@
cooperindustries.com

**India**

91-124-4683888
FAX: 91-124-4683899

cchindia@
cooperindustries.com


**For more information:**

If further assistance is required, please contact an authorized Eaton Distributor, Sales Office, or Customer Service Department.


**Eaton**
1000 Eaton Boulevard
Cleveland, OH 44122
United States
Eaton.com



© 2018 Eaton
All Rights Reserved


Printed in USA
Publication No. 5123-0318
March 2018



Eaton is a registered trademark.

All other trademarks are property of their respective owners.


Powering Business Worldwide

# LED WIDE ENCLOSED & GASKETED - EGW

Type 406



## PRODUCT HIGHLIGHTS

- Vaportight design
- IP66, IP67 Certified (comparable to NEMA 6)
- NEMA 4X rated / NEMA 250-2003
- High pressure hose down (1500psi)
- NSF / ANSI Standard 2
- UL50E: standards for safety enclosures of electrical equipment
- 12 Point stainless steel latching and stainless hardware
- Sloped housing design promotes water displacement
- Optional stainless steel "V" bracket or "SB" surface bracket accessory
- RoHS Compliant

**EXPECTED LIFE -** Projected life of at least 60,000 hours. Contact factory for TM-21 detail.

**LEDs -** Use of closely-spaced medium-power, high-brightness chips minimizes pixelation and provides uniform lens luminance. Available in Cool White (5000K), Neutral White (4000K) and Warm White (3500K) color temperatures. CRI >= 80 (CW > 70). LM-80 reports available.

**LENS -** Frosted, injection molded, high impact acrylic is standard. An optional clear lens is also available.

**HOUSING -** The inner gear tray is constructed of code gauge steel. The outer housing is constructed of fiberglass reinforced polyester. Gasketing in the housing is constructed of closed cell polyurethane. Conduit entrance is provided at one end. All external hardware and hanging components are constructed of stainless steel.

**ELECTRICAL -** Universal voltage (120-277 Vac) input, 50/60Hz. Power factor > 0.9, THD < 20%, in-rush current < 15 Amps.

**DRIVER -** High-performance isolated driver features over-voltage, over-current and short-circuit (with auto-recovery) protection. Driver module is sealed to IP66 protection levels, with a Class A sound rating. 0-10 volt dimming standard.

**OPERATING TEMPERATURE -** -30°C to 45°C (-22°F to 113°F).

**FINISH -** All metal parts are painted after fabrication following treatment with phosphate rust inhibitor. Finish coating of housing reflecting surfaces is with high-reflectance (minimum 92%) polyester powder.

**WARRANTY -** Limited 5-year warranty

**PHOTOMETRICS -** Please visit our website at www.lsi-industries.com for detailed photometric data.

**LISTING -** Listed to UL 1598 and UL 8750

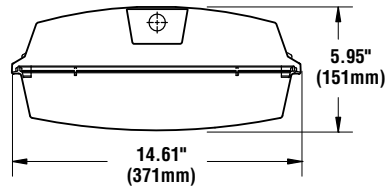


**LIGHT OUTPUT - LED EGW**

| | Lumens (Nominal) | | | |
|---|---|---|---|---|
| | WW | NW | CW | Watts |
| HO | 5930 | 5840 | 6540 | 57 |
| VHO | 9425 | 9590 | 11455 | 88 |
| XHO | 18972 | 20765 | 22005 | 164 |

LED Chips are frequently updated therefore values may increase.

**This product, or selected versions of this product, meet the standards listed below. Please consult factory for your specific requirements.**

MANUFACTURED IN USA

ARRA Funding Compliant

c UL us LISTED wet location

STANTEC PROJECT #: 110126045 SUBMITTAL # ELE-004 Lighting

This review by Stantec is for general conformance with the design concept of Stantec's design of the:

☐ Architectural ☐ Structural ☐ Mechanical ☑ Electrical ☐ Other

component(s) only and does not mean that Stantec has verified or approves the shop drawing(s). The Contractor remains solely responsible for the shop drawing(s) and this review by Stantec does not relieve the Contractor of the Contractor's responsibility for [illegible] all requirements of the contract documents. This review does not mean that Stantec approves the detailed design inherent in the shop drawing, responsibility for which shall remain with the Contractor submitting same, nor does this review mean that Stantec accepts any deviation of the shop drawing(s) from the contract documents. The Contractor is responsible for confirming all dimensions and correlating them at the job site, for all construction means, methods and techniques, and for coordination of construction work of all trades, including coordination of shop drawings.

Stantec

☑ REVIEWED
☐ REVIEWED, AS NOTED
☐ REVISE AND RESUBMIT
☐ NOT REVIEWED

DATE June 26, 2018

BY: Chester Martinez, E.I.T.

## ORDERING INFORMATION

TYPICAL ORDER EXAMPLE: **EGW 4 S LED HO CW UE**

| Prefix | Length | Distribution | Light Source | Drive Current | Color Temperature | Line Voltage | Options |
|---|---|---|---|---|---|---|---|
| EGW - LED Wide Enclosed & Gasketed | 4 | S - Symmetric | LED | HO - High Output<br>VHO - Very High Output<br>XHO - Extreme High Output | CW - Cool White (5000K)<br>NW - Neutral White (4000K)<br>WW - Warm White (3500K) | UE - Universal Voltage (120-277V)<br>347 - 347V | CL - Clear Lens<br>W6C163[1] - 6-foot, 16 gauge, 3 conductor cord with Wet Location fitting<br>W6C164[1] - 6-foot, 16 gauge, 4 conductor cord with Wet Location fitting<br>W6C165[1] - 6-foot, 16 gauge, 5 conductor cord with Wet Location fitting<br>HUB - 3/4" N.P.T. HUB IN BACK / TOP (Damp Location Rated Only)<br>LT - Lens Safety Teather<br>EM - 1100 Lumen Emergency Battery Pack<br>SD50 - Step Dimming to 50% |

**ACCESSORY ORDERING INFORMATION**

| Description | Order Number |
|---|---|
| Stainless Suspension Hangers ("V" Hook) (Pair) | EGWVB |
| Cable Hanging Set with Loop 10 ft. (pair) | LCH10 |
| Cable Hanging Set with Loop 20 ft. (pair) | LCH20 |
| Stainless Steel Surface Bracket | EGWSB |

1- Specific voltage must be specified. Cord feed entrance available on housing end only.

**Project Name** Water treatment plant **Fixture Type** 406

**Catalog #** EGW 4 S LED HO CW 347V

© 2016 LSI INDUSTRIES INC.

Arctic Electrical Nunavut Ltd
PO Box 1381, Iqaluit, NU X0A 0H0 -P867-975-3494

# 26 52 01 - Unit Equipment for Emergency Lighting

**Date: July 23, 2018**

REVIEWED BY CONTRACTOR
Kudlik Construction Ltd.
NAME: Sandra Rousseau P.Eng
DATE: Jul 23, 2018

# Transmittal

**Arctic Electrical Nunavut Ltd**
PO Box 1381
Iqaluit, Nu.
X0A 0H0
Phone: 867-975-3494
**From: Lee Pitcher**



**Project** **Waste Wate Treatment Plant**
**Location** Iqaluit NU
**To** Kudlik Construction
Contact: Sandra Rousseau P.Eng.
srousseau@kudlik.biz

SE-09R1 (ELE009)
PO-P18-152 Nedco52

Attached are the following items:

- [x] Drawings
- [ ] Prints
- [ ] Plans
- [x] Specifications
- [ ] Information
- [ ] Submittals

Other:

THESE ARE TRANSMITTED FOR:

- [ ] Prior Approval
- [ ] Approval
- [ ] Approval as Submitted
- [ ] Approval as Noted
- [X] Resubmittal for Approval
- [ ] Corrections
- [ ] Your Use
- [ ] Review and Comment
- [ ] Record

Bids due on:
Other:

| Qty | Type | MFG | Part |
|---|---|---|---|

Section 26 52 01 Unit Equipment for Emergency Lighting

Section 26 53 00 Exit Signs

STANTEC PROJECT #: 110126045

SUBMITTAL # ELE-009-R1

This review by Stantec is for general conformance with the design concept of Stantec's design of the:

- [ ] Architectural
- [ ] Structural
- [ ] Mechanical
- [x] Electrical
- [ ] Other

component(s) only and does not mean that Stantec has verified or approves the shop drawing(s). The Contractor remains solely responsible for the shop drawing(s) and this review by Stantec does not relieve the Contractor of the Contractor's responsibility for errors or omissions in the shop drawing(s) or for meeting all requirements of the contract documents. This review does not mean that Stantec approves the detailed design inherent in the shop drawing, responsibility for which shall remain with the Contractor submitting same, nor does this review mean that Stantec accepts any deviation of the shop drawing(s) from the contract documents. The Contractor is responsible for confirming all dimensions and correlating them at the job site, for all construction means, methods and techniques, and for coordination of construction work of all trades, including coordination of all shop drawings.

Stantec

- [ ] REVIEWED
- [x] REVIEWED, AS NOTED
- [ ] REVISE AND RESUBMIT
- [ ] NOT REVIEWED

DATE 2018-07-30

BY Konrad Goluch

**Notes:**
Please review the attached approval drawings carefully. Production cannot be scheduled until a signed copy of the final approved drawing are received. Be aware that once drawings are approved, any errors due to incorrect information are the responsibility of the Contractor.

Do not hesitate to contact me if you have any questions or concerns.

WSA LIGHT ENERGY DESIGN LTD
101-5420 CANOTEK RD
OTTAWA, ON K1J 1E9
Phone: 613-745-0001
Fax: 613-745-0002
Contact: Strachan, Hayden

# Iqaluit WWTP

18-21616-1

7/19/2018

Project 18-21616-1
Iqualuit WWTP

Submitted By
WSA LIGHT ENERGY DESIGN LTD

| Type | Manufacturer/Brand | Catalog Number |
|---|---|---|
| DRH-XP | Aimlite | RMHZ-2112-24V6WLA/MR16/CM |
| BP1+2 | Aimlite | EBHZ-2414411CD-2Z16WLA |
| EX-XP | Aimlite | RPZN21GRY |
| DRH | Aimlite | RMMD2-12-24V6WLA |
| BP# 3,5,6,7 | Aimlite | EBST24144-2MD5WLA-WHT-ATD/AMP-VLT |
| BP #4 | Aimlite | EBST24350-2MD5WLA-WHT-ATD/AMP-VLT |
| EX | Aimlite | RPSTUMWHT-UNVDC |

| | | | |
|---|---|---|---|
| WSA LIGHT ▪ ENERGY ▪ DESIGN | Project 18-21616-1<br>Iqualuit WWTP<br><br>Submitted By<br>WSA LIGHT ENERGY DESIGN LTD | Catalog Number<br>RMHZ-2112-24V6WLA/MR16/CM<br><br>Notes<br>8-10 weeks | Type<br>DRH-XP |

# RMHZ

## Hazardous location remote fixture

6, 12 or 24VDC Models

Wall, Ceiling or Pendant Mount

Project: _____

Type: _____

Catalogue #: _____

Drawn by: _____

Date: _____

Designed to meet the strictest Codes, the RMHZ series of hazardous location remote fixtures provides safe and dependable operation. The RMHZ series housings are built with die cast, copper free aluminum, in a variety of Class and Division rated models. Available as 6V, 12V or 24V models with wall, ceiling or pendant mounted configuration.



## FEATURES AND SPECIFICATIONS

### CIRCUITRY - AC & AC/DC

- Single or double internal MR11 or MR16 lamp assemblies
- Quartz-halogen or LED lamps

### MECHANICAL

- Die cast, copper free aluminum, grey finish
- Heavy-duty Pyrex glass lens
- Internal MR11 or MR16 lamp assembly is fully adjustable
- Wall, ceiling or pendant mounting (as specified)
- Wiring pre-pulled through fixture
- Wall and ceiling models c/w integrated die cast junction box
- Junction box c/w oversized integral mounting holes and tapped and plugged rigid holes
- Temperature code: T6

### APPROVALS

- CSA Certified to C22.2 #137
- CSA Certified to C22.2 #141-15
- Class I, Division 1, Groups C & D
- Class I, Zone 1 & 2, Groups IIA & IIB

### COMPLIANCE

- Meets requirements of ICES-005

LED

HAZARDOUS LOCATION

ICES 005

## DIMENSIONS

### PENDANT MOUNT

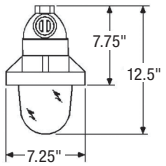


### CEILING MOUNT

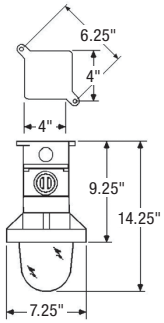


### WALL MOUNT

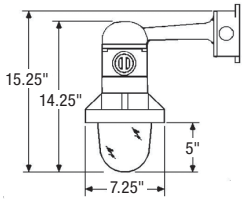


## OVERVIEW

| | |
|---|---|
| **Light source** | Quartz or LED |
| **DC voltage** | 6VDC, 12VDC or 24VDC |

| | | | |
|---|---|---|---|
| WSA LIGHT ▪ ENERGY ▪ DESIGN | Project 18-21616-1<br>Iqualuit WWTP<br>Submitted By<br>WSA LIGHT ENERGY DESIGN LTD | Catalog Number<br>RMHZ-2112-24V6WLA/MR16/CM<br>Notes<br>8-10 weeks | Type<br>DRH-XP |

RMHZIII

## ORDERING GUIDE - LED

RMHZ ____ ____ — ____ ____ ____ 1 1 CD / ____

| Series | Head | Nbr of lamps | Voltage | Wattage | Lamp type | Mounting | Class | Div. | Group | Options |
|---|---|---|---|---|---|---|---|---|---|---|
| RMHZ | 1 - Single<br>2 - Double (with J-Box) | 1 - Single lamp per head<br>2 - Double lamp per head | 06-24 - 6VDC to 24VDC operational<br>12-24 - 12VDC to 24VDC operational | 4W - 4 watts<br>5W - 5 watts<br>6W - 6 watts<br>7W - 7 watts | LR - LED<br>LA - LED | C - Ceiling mount<br>P - Pendant mount<br>M - Wall mount | 1 | 1 | C<br>D | LGD - Die cast lens guard |

## ORDERING GUIDE - INCANDESCENT

RMHZ ____ ____ — ____ ____ WQ ____ 1 1 CD / ____

| Series | Head | Nbr of lamps | Voltage | Lamp | Lamp type | Mounting | Class | Div. | Group | Options |
|---|---|---|---|---|---|---|---|---|---|---|
| RMHZ | 1 - Single<br>2 - Double (with J-Box) | 1 - Single lamp per head<br>2 - Double lamp per head | 06 - 6VDC<br>12 - 12VDC<br>24 - 24VDC | See lamp selection | WQ - Quartz halogen | C - Ceiling mount<br>P - Pendant mount<br>M - Wall mount | 1 | 1 | C<br>D | LGD - Die cast lens guard |

## LAMP SELECTION

| | 6 Volts | 12 Volts | 24 Volts |
|---|---|---|---|
| MR11 • Small head | | | |
| Quartz halogen | 10WQ | 20WQ | 20WQ |

MOUNTING SHALL BE TO SUIT LOCATION

All products are subject to change or may be discontinued any time without notice.

| | | | |
|---|---|---|---|
| WSA LIGHT ▪ ENERGY ▪ DESIGN | Project 18-21616-1<br>Iqualuit WWTP<br><br>Submitted By<br>WSA LIGHT ENERGY DESIGN LTD | Catalog Number<br>EBHZ-2414411CD-2Z16WLA<br><br>Notes<br>8-10 weeks | Type<br>BP1+2 |

# EBHZ

## Hazardous location battery unit

6, 12 or 24VDC Models

120/347VAC Input

Project: _____

Type: _____

Catalogue #: _____

Drawn by: _____

Date: _____

Designed to meet the strictest codes and standards, the EBHZ series of hazardous location battery units provides safe and dependable operation. The EBHZ series housings are built with die cast, copper free aluminum, in a variety of Class and Division rated models. Available in 6, 12 and 24VDC models in a range of capacities from 36 to 320W, for 30 minutes duration.



## FEATURES AND SPECIFICATIONS

### CIRCUITRY

- Range of input voltages 120 or 347VAC
- Single or double internal MR11 or MR16 lamp assemblies
- 6VDC, 12VDC or 24VDC emergency power output versions (as specified)
- Wattage capacities from 36 to 320W
- 30 minutes emergency power duration standard
- Diagnostic/pilot LED for AC ON
- High efficiency, rapid recovery, precision control charging system
- Brownout and short circuit protection
- Temperature compensated
- Large magnum terminal screw type connectors for remote load connection
- Maintenance free, sealed lead acid battery

### MECHANICAL

- Die cast, copper free aluminum housing - grey aluminum finish
- Housing cavity accessed via large circular screw on/off cover plate
- Standard stainless steel one-way breather valve for release of gases and/or moisture condensation
- Housing c/w tapped and plugged rigid holes
- Solid state design and construction
- Oversized integral mounting holes/forks accept heavy-duty mounting hardware
- Internal MR11 or MR16 lamp assembly is fully adjustable
- Temperature code: T6

### APPROVALS

- CSA Certified to C22.2 #137
- CSA Certified to C22.2 #141-15
- Class I, Division 1, Groups C & D
- Class I, Zone 1 & 2, Groups IIA & IIB

### COMPLIANCE

- Meets requirements of ICES-005

HAZARDOUS LOCATION

ICES 005

## DIMENSIONS

### ENCLOSURE A

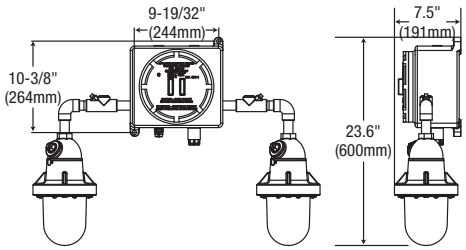


### ENCLOSURE B

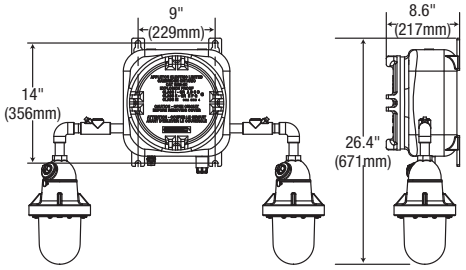


Dimensions are subject to change according to exact Class, Division & Group specifications.

## OVERVIEW

| | |
|---|---|
| **Input voltage** | 120 or 347V AC |
| **DC voltage** | 6VDC, 12VDC or 24VDC |
| **Output power** | 36W - 320W |

| | | | |
|---|---|---|---|
| WSA LIGHT ▪ ENERGY ▪ DESIGN | Project 18-21616-1<br>Iqualuit WWTP<br>Submitted By<br>WSA LIGHT ENERGY DESIGN LTD | Catalog Number<br>EBHZ-2414411CD-2Z16WLA<br>Notes<br>8-10 weeks | Type<br>BP1+2 |

EBHZIII

## ORDERING GUIDE

| EBHZ | | | 1 | 1 | CD | | — | | | |
|---|---|---|---|---|---|---|---|---|---|---|

| Series | Voltage | Wattage | Class | Div. | Group | Input voltage | Head | Lamp/Head | Lamp |
|---|---|---|---|---|---|---|---|---|---|
| EBHZ | **06 -** 6VDC<br>**12 -** 12VDC<br>**24 -** 24VDC | See model rating below | 1 | 1 | C<br>D | **Blank -** 120/347V | **1Z -** Single<br>**2Z -** Double | **1 -** Single lamp assembly<br>**2 -** Double lamp assembly | See lamp selection below<br>6WLA |

## LAMP SELECTION

| | 6 Volts | 12 Volts | 24 Volts |
|---|---|---|---|
| **MR11 • Small head** | | | |
| Quartz halogen | 10WQ | 20WQ | 20WQ |
| **MR16** | | | |
| LED | 4WLR, 5WLA | 4WLR, 5WLA, 6WLA, 7WLA | 4WLR, 5WLA, 6WLA, 7WLA |

## MODEL RATINGS

**Wattage capacities**

| Model | Enclosure | Voltage | 30 min. | 60 min. | 90 min. | 120 min. |
|---|---|---|---|---|---|---|
| **EBHZ06036** | A | 6VDC | 36 | 18 | 12 | 9 |
| **EBHZ06050** | A | 6VDC | 50 | 25 | 16 | 12 |
| **EBHZ06072** | A | 6VDC | 72 | 36 | 24 | 18 |
| **EBHZ12036** | A | 12VDC | 36 | 18 | 12 | 9 |
| **EBHZ12050** | A | 12VDC | 50 | 25 | 16 | 12 |
| **EBHZ12072** | A | 12VDC | 72 | 36 | 24 | 18 |
| **EBHZ12100** | A | 12VDC | 100 | 50 | 33 | 25 |
| **EBHZ12160** | B | 12VDC | 160 | 80 | 53 | 40 |
| **EBHZ12200** | B | 12VDC | 200 | 100 | 66 | 50 |
| **EBHZ24144** | A | 24VDC | 144 | 72 | 48 | 36 |
| **EBHZ24320** | B | 24VDC | 320 | 160 | 106 | 80 |

All products are subject to change or may be discontinued any time without notice.

| | | | |
|---|---|---|---|
| WSA LIGHT ▪ ENERGY ▪ DESIGN | Project 18-21616-1<br>Iqualuit WWTP<br><br>Submitted By<br>WSA LIGHT ENERGY DESIGN LTD | Catalog Number<br>RMMD2-12-24V6WLA<br><br>Notes<br>stock-2 weeks | Type<br>DRH |

# RMMD

Project:

Contractor:

## COMPACT REMOTE

MR16 Surface Mount
Single, Double or Triple
6V, 12V, & 24V Lamps



**Approvals:**
CSA Certified to C22.2 #141.15

### DESCRIPTION

The RMMD series of commercial MR16 remotes provides exceptional light output in a compact, traditional design. The die cast, all metal housing is fully adjustable with a friction lock tilt and swivel that can be locked in place with a rear mounted set screw. The canopy is designed to mount directly to typical electrical junction boxes. Available in 6V, 12V and 24V models, all utilizing low glare, MR16 quartz halogen or LED lamps.

### DIMENSIONS

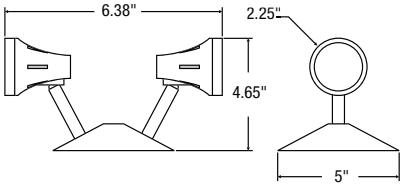


### MECHANICAL

- Die cast, solid metal housing with die cast, twist lock lamp collar
- Complete adjustablity - both tilt and swivel
- 5" diameter canopy standard
- Two canopy mounting holes designed to match standard electrical junction boxes
- White paint finish is standard, black colour is optional
- MR16 lamp designed with low glare reflector and available in 6VDC, 12VDC or 24VDC

### ORDERING GUIDE – LED

RMMD ____ — ____ ____ ____ / ____

| Series | Number of heads | Voltage | Wattage | Lamp type | Colour | Options† |
|---|---|---|---|---|---|---|
| **RMMD** | **1** - Single head<br>**2** - Double head<br>~~**3** - Triple head~~<br>**4** - Quad head (require 12" dia. canopy) | **06 - 24** - 6VDC to 24VDC operational | **4W** - 4 watts | **LR** - LED | **WHT** - White (standard)<br>~~**BLK** - Black~~ | **LCP, VDR, WRG, LXG** |
| | | | **5W** - 5 watts | **LA** - LED | | |
| | | **12 - 24** - 12VDC to 24VDC operational | **6W** - 6 watts<br>~~**7W** - 7 watts~~ | **LA** - LED | | |

### ORDERING GUIDE – INCANDESCENT

RMMD ____ — ____ ____ ____ / ____

| Series | Number of heads | Voltage | Lamp | Colour | Options† |
|---|---|---|---|---|---|
| **RMMD** | **1** - Single head<br>**2** - Double head<br>**3** - Triple head<br>**4** - Quad head (require 12" dia. canopy) | **06V** - 6VDC<br>**12V** - 12VDC<br>**24V** - 24VDC | See lamp selection chart | **WHT** - White (standard)<br>**BLK** - Black | **LCP, VDR, WRG, LXG** |

### INCANDESCENT LAMP SELECTION

| | 6 Volts | 12 Volts | 24 Volts |
|---|---|---|---|
| **MR16 - Small head** | | | |
| Quartz halogen | 08Q, 10Q, 12Q, 20Q | 08Q, 10Q, 12Q, 20Q, 35Q, 50Q | 10Q, 12Q, 20Q, 35Q, 50Q |

† For detailed options descriptions, please consult the options page.

| | | | |
|---|---|---|---|
| WSA LIGHT ▪ ENERGY ▪ DESIGN | Project 18-21616-1<br>Iqualuit WWTP<br><br>Submitted By<br>WSA LIGHT ENERGY DESIGN LTD | Catalog Number<br>EBST24144-2MD5WLA-WHT-ATD/AMP-VLT<br><br>Notes<br>(please note AUD is not included not on spec sheet?) 2-3 weeks | Type<br>BP# 3,5,6,7 |

# EBST

Project:

Contractor:

## STEEL BATTERY UNIT

6V, 12V or 24V Models
18-720W Capacity
120/347VAC Input

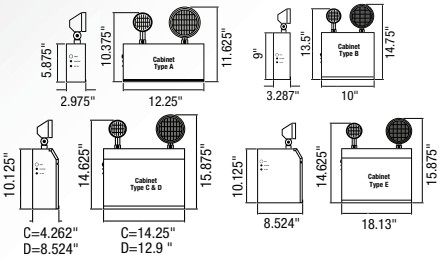




**Approvals:**
CSA Certified to C22.2 #141.15

### DESCRIPTION

The EBST series of commercial steel battery units is designed to provide efficient and reliable emergency lighting. Utilizing a sturdy, all steel housing, the EBST presents a modern and unobtrusive design. On higher capacity models, the cabinet front is sloped to allow better internal access and superior low angle light distribution. The EBST series is available in 6VDC, 12VDC and 24VDC versions in a range of wattage capacities between 18 and 720W, for 30 minutes duration. Units are typically supplied with two top mounted PAR18 or PAR36 type heads, however a wide range of head type, number and placement are available including MR16 type. The EBST can also accommodate a wide variety of options, including auto-testing self-diagnostics and remote testing.

### MECHANICAL

- Rugged steel cabinet with ultraguard rust-coating
- 120VAC line cord supplied standard
- Universal spider knockout pattern and keyhole mounting slots stamped into back of cabinet
- Multiple conduit entry knockouts
- White powder coat finish standard, other finishes and Colours optional
- Lamp heads include PAR18 small style, PAR36 large style and die cast metal MR16 type
- Top head mounting is standard, side mount is optional

### CIRCUITRY

- 120/347VAC 60Hz Input, field selectable
- High efficiency, rapid recovery, precision control charging system
- 6VDC, 12VDC or 24VDC emergency power output versions (as specified)
- Wattage capacities from 18 to 720W
- 30 Minutes emergency power duration standard
- Momentary push button test switch
- Diagnostic/pilot LEDs for AC ON and CHARGE
- Fully automatic, current limited charger
- Line latched, low voltage protection
- Solid state design and construction
- Brownout and short circuit protection
- Temperature compensated
- Load connection 72W and above
- Complete battery recharge in 24 hours
- Maintenance free, sealed lead acid battery
- Optional automatic-testing, self-diagnostic charger board:
  - Continuously monitors the operational status of the battery unit
  - Automatically performs battery and lamp load testing at preset intervals
  - Indicates any component malfunctions or automated test failures

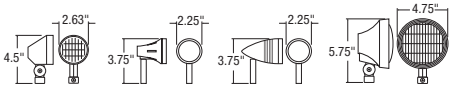


**Type SM – PAR18** Thermoplastic 18W max.
**Type MD – MR16** Die cast 35W max.
**Type MB – MR16** Die cast 35W max.
**Type LG – PAR36** Thermoplastic 70W max.

### ORDERING GUIDE

EBST ____ ____ — ____ ____ / ____

| Series | Voltage | Wattage | Head/Lamp | | Lamp | Colour | Options† |
|---|---|---|---|---|---|---|---|
| **EBST** | **06** - 6VDC<br>**12** - 12VDC<br>**24** - 24VDC | See model rating below<br>144 | **0** - No Heads<br>**1SM** - One PAR18<br>**2SM** - Two PAR18<br>**1LG** - One PAR36<br>**2LG** - Two PAR36 | **1MD** - One MR16<br>**2MD** - Two MR16<br>**1MB** - One MR16<br>**2MB** - Two MR16 | See lamp list below<br>5WLA | **WHT** - White (standard)<br>**BLK** - Black<br>**GRY** - Grey | **ATD, TDL*, LPD, BTD, VLT, AMP, ACT, DCT, FS4, RDS*, NLC, TLP, CAB, VDR, MTS, WRG, IRT, IRC** |

† For detailed options descriptions, please consult the options page. * Specify AC voltage.

### LAMP SELECTION

| | 6 Volts | 12 Volts | 24 Volts |
|---|---|---|---|
| **PAR18 - Small head or LED Lamp** | | | |
| LED | 3WLJ, 4WLJ, 5WLA | 3WLJ, 4WLJ, 5WLA, 6WLA, 7WLA | 4WLR, 5WLA, 6WLA, 7WLA |
| Quartz halogen | 08WQ, 10WQ, 12WQ | 10WQ, 12WQ | 12WQ |
| Tungsten | 09WT | 09WT, 12WT, 18WT | 09WT, 18WT |
| **MR16 - Small head c/w MR16 or LED Lamp** | | | |
| LED | 4WLR, 5WLA | 4WLR, 5WLA, 6WLA, 7WA | 4WLR, 5WLA, 6WLA, 7WLA |
| Quartz halogen | 08WQ, 10WQ, 12WQ, 20WQ | 08WQ, 10WQ, 12WQ, 20WQ, 35WQ | 10WQ, 12WQ, 20WQ |
| **PAR36 - Large head** | | | |
| Quartz halogen | 08WQ, 10WQ, 12WQ, 20WQ | 10WQ, 12WQ , 20WQ, 35WQ | 12WQ |
| Tungsten | 09WT, 18WT, 25WT | 09WT, 18WT, 25WT | 09WT, 18WT, 25WT |
| Quartz sealed beam | 08WSBQ, 10WSBQ, 12WSBQ, 20WSBQ | 08WSBQ, 12WSBQ, 35WSBQ, 55WSBQ | 70WSBQ |
| Tungsten sealed beam | 08WSBT, 09WSBT, 18WSBT | 25WSBT | N/A |

### MODEL RATINGS

| | | Wattage Capacities | | | | |
|---|---|---|---|---|---|---|
| Model | Voltage | 30 min. | 60 min. | 90 min. | 120 min. | Cabinet |
| **EBST-06018** | 6V | 18 | 9 | N/A | N/A | A |
| **EBST-06036** | 6V | 36 | 18 | 12 | 9 | A |
| **EBST-06050** | 6V | 50 | 25 | 16 | 12 | A |
| **EBST-06072** | 6V | 72 | 36 | 24 | 18 | B |
| **EBST-06100** | 6V | 100 | 50 | 33 | 25 | B |
| **EBST-06160** | 6V | 160 | 80 | 53 | 40 | C |
| **EBST-06180** | 6V | 180 | 90 | 60 | 45 | C |
| **EBST-12036** | 12V | 36 | 18 | 12 | 9 | A |
| **EBST-12050** | 12V | 50 | 25 | 16 | 12 | A |
| **EBST-12072** | 12V | 72 | 36 | 24 | 18 | A |
| **EBST-12100** | 12V | 100 | 50 | 33 | 25 | B |
| **EBST-12144** | 12V | 144 | 72 | 48 | 36 | C |
| **EBST-12160** | 12V | 160 | 80 | 53 | 40 | C |
| **EBST-12200** | 12V | 200 | 100 | 66 | 50 | C |
| **EBST-12250** | 12V | 250 | 125 | 83 | 62 | D |
| **EBST-12360** | 12V | 360 | 180 | 120 | 90 | D |
| **EBST-24144** | 24V | 144 | 72 | 48 | 36 | C |
| **EBST-24288** | 24V | 288 | 144 | 96 | 72 | D |
| **EBST-24320** | 24V | 320 | 160 | 106 | 80 | D |
| **EBST-24350** | 24V | 350 | 175 | 116 | 87 | E |
| **EBST-24550** | 24V | 550 | 275 | 183 | 137 | E |
| **EBST-24720** | 24V | 720 | 360 | 240 | 180 | E |

**NOTE:** Due to cabinet/space limitations, not all options are available for all models in any given combination. Please consult with your factory representative regarding specific options and exact cabinet dimension information.

| | | | |
|---|---|---|---|
| WSA LIGHT ▪ ENERGY ▪ DESIGN | Project 18-21616-1<br>Iqualuit WWTP<br><br>Submitted By<br>WSA LIGHT ENERGY DESIGN LTD | Catalog Number<br>EBST24350-2MD5WLA-WHT-ATD/AMP-VLT<br><br>Notes<br>(please note AUD is not included not on spec sheet?) 2-3 weeks | Type<br>BP #4 |

# EBST

Project: Contractor:

## STEEL BATTERY UNIT

6V, 12V or 24V Models
18-720W Capacity
120/347VAC Input

**Approvals:**
CSA Certified to C22.2 #141.15

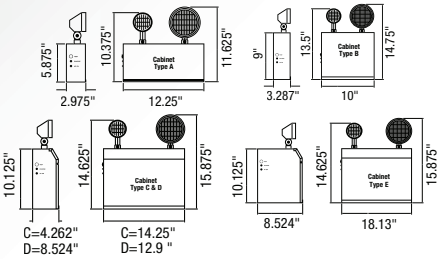




### DESCRIPTION

The EBST series of commercial steel battery units is designed to provide efficient and reliable emergency lighting. Utilizing a sturdy, all steel housing, the EBST presents a modern and unobtrusive design. On higher capacity models, the cabinet front is sloped to allow better internal access and superior low angle light distribution. The EBST series is available in 6VDC, 12VDC and 24VDC versions in a range of wattage capacities between 18 and 720W, for 30 minutes duration. Units are typically supplied with two top mounted PAR18 or PAR36 type heads, however a wide range of head type, number and placement are available including MR16 type. The EBST can also accommodate a wide variety of options, including auto-testing self-diagnostics and remote testing.

### MECHANICAL

- Rugged steel cabinet with ultraguard rust-coating
- 120VAC line cord supplied standard
- Universal spider knockout pattern and keyhole mounting slots stamped into back of cabinet
- Multiple conduit entry knockouts
- White powder coat finish standard, other finishes and Colours optional
- Lamp heads include PAR18 small style, PAR36 large style and die cast metal MR16 type
- Top head mounting is standard, side mount is optional

### CIRCUITRY

- 120/347VAC 60Hz Input, field selectable
- High efficiency, rapid recovery, precision control charging system
- 6VDC, 12VDC or 24VDC emergency power output versions (as specified)
- Wattage capacities from 18 to 720W
- 30 Minutes emergency power duration standard
- Momentary push button test switch
- Diagnostic/pilot LEDs for AC ON and CHARGE
- Fully automatic, current limited charger
- Line latched, low voltage protection
- Solid state design and construction
- Brownout and short circuit protection
- Temperature compensated
- Load connection 72W and above
- Complete battery recharge in 24 hours
- Maintenance free, sealed lead acid battery
- Optional automatic-testing, self-diagnostic charger board:
  - Continuously monitors the operational status of the battery unit
  - Automatically performs battery and lamp load testing at preset intervals
  - Indicates any component malfunctions or automated test failures

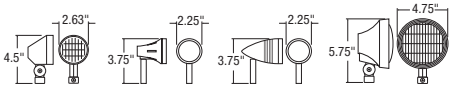


**Type SM – PAR18**
Thermoplastic
18W max.

**Type MD – MR16**
Die cast
35W max.

**Type MB – MR16**
Die cast
35W max.

**Type LG – PAR36**
Thermoplastic
70W max.

### ORDERING GUIDE

EBST — /

| Series | Voltage | Wattage | Head/Lamp | | Lamp | Colour | Options† |
|---|---|---|---|---|---|---|---|
| **EBST** | **06** - 6VDC<br>**12** - 12VDC<br>**24** - 24VDC | See model rating below<br>350 | **0** - No Heads<br>**1SM** - One PAR18<br>**2SM** - Two PAR18<br>**1LG** - One PAR36<br>**2LG** - Two PAR36 | **1MD** - One MR16<br>**2MD** - Two MR16<br>**1MB** - One MR16<br>**2MB** - Two MR16 | See lamp list below<br>5WLA | **WHT** - White (standard)<br>**BLK** - Black<br>**GRY** - Grey | **ATD, DL*, LPD, BTD, VLT, AMP, ACT, DCT, FS4, RDS*, NLC, TLP, CAB, VDR, MTS, WRG, IRT, IRC** |

† For detailed options descriptions, please consult the options page. * Specify AC voltage.

### LAMP SELECTION

| | 6 Volts | 12 Volts | 24 Volts |
|---|---|---|---|
| **PAR18 - Small head or LED Lamp** | | | |
| LED | 3WLJ, 4WLJ, 5WLA | 3WLJ, 4WLJ, 5WLA, 6WLA, 7WLA | 4WLR, 5WLA, 6WLA, 7WLA |
| Quartz halogen | 08WQ, 10WQ, 12WQ | 10WQ, 12WQ | 12WQ |
| Tungsten | 09WT | 09WT, 12WT, 18WT | 09WT, 18WT |
| **MR16 - Small head c/w MR16 or LED Lamp** | | | |
| LED | 4WLR, 5WLA | 4WLR, 5WLA, 6WLA, 7WA | 4WLR, 5WLA, 6WLA, 7WLA |
| Quartz halogen | 08WQ, 10WQ, 12WQ, 20WQ | 08WQ, 10WQ, 12WQ, 20WQ, 35WQ | 10WQ, 12WQ, 20WQ |
| **PAR36 - Large head** | | | |
| Quartz halogen | 08WQ, 10WQ, 12WQ, 20WQ | 10WQ, 12WQ , 20WQ, 35WQ | 12WQ |
| Tungsten | 09WT, 18WT, 25WT | 09WT, 18WT, 25WT | 09WT, 18WT, 25WT |
| Quartz sealed beam | 08WSBQ, 10WSBQ, 12WSBQ, 20WSBQ | 08WSBQ, 12WSBQ, 35WSBQ, 55WSBQ | 70WSBQ |
| Tungsten sealed beam | 08WSBT, 09WSBT, 18WSBT | 25WSBT | N/A |

### MODEL RATINGS

| | | Wattage Capacities | | | | |
|---|---|---|---|---|---|---|
| Model | Voltage | 30 min. | 60 min. | 90 min. | 120 min. | Cabinet |
| **EBST-06018** | 6V | 18 | 9 | N/A | N/A | A |
| **EBST-06036** | 6V | 36 | 18 | 12 | 9 | A |
| **EBST-06050** | 6V | 50 | 25 | 16 | 12 | A |
| **EBST-06072** | 6V | 72 | 36 | 24 | 18 | B |
| **EBST-06100** | 6V | 100 | 50 | 33 | 25 | B |
| **EBST-06160** | 6V | 160 | 80 | 53 | 40 | C |
| **EBST-06180** | 6V | 180 | 90 | 60 | 45 | C |
| **EBST-12036** | 12V | 36 | 18 | 12 | 9 | A |
| **EBST-12050** | 12V | 50 | 25 | 16 | 12 | A |
| **EBST-12072** | 12V | 72 | 36 | 24 | 18 | A |
| **EBST-12100** | 12V | 100 | 50 | 33 | 25 | B |
| **EBST-12144** | 12V | 144 | 72 | 48 | 36 | C |
| **EBST-12160** | 12V | 160 | 80 | 53 | 40 | C |
| **EBST-12200** | 12V | 200 | 100 | 66 | 50 | C |
| **EBST-12250** | 12V | 250 | 125 | 83 | 62 | D |
| **EBST-12360** | 12V | 360 | 180 | 120 | 90 | D |
| **EBST-24144** | 24V | 144 | 72 | 48 | 36 | C |
| **EBST-24200** | 24V | 200 | 100 | 66 | 50 | C |
| **EBST-24320** | 24V | 320 | 160 | 106 | 80 | D |
| **EBST-24350** | 24V | 350 | 175 | 116 | 87 | E |
| **EBST-24560** | 24V | 560 | 285 | 190 | 137 | E |
| **EBST-24720** | 24V | 720 | 360 | 240 | 180 | E |

**NOTE:** Due to cabinet/space limitations, not all options are available for all models in any given combination. Please consult with your factory representative regarding specific options and exact cabinet dimension information.

Arctic Electrical Nunavut Ltd
PO Box 1381, Iqaluit, NU X0A 0H0 -P867-975-3494

# 26 53 00 - Exit Signs

| | | | |
|---|---|---|---|
| WSA LIGHT ▪ ENERGY ▪ DESIGN | Project 18-21616-1<br>Iqualuit WWTP<br><br>Submitted By<br>WSA LIGHT ENERGY DESIGN LTD | Catalog Number<br>RPSTUMWHT-UNVDC<br><br>Notes<br>stock-2 weeks | Type<br>EX |

# RPST

Project:

Contractor:

## STEEL
NBC2010 Compliant



**Approvals:**
CSA Certified to C22.2 #141.15 and C860

### DESCRIPTION
The clean lines of the RPST series of commercial steel signs present a fully modern appearance. The steel provides for a rigid, durable and lightweight sign. Available in AC only, AC/DC and internally self-powered versions.

### CIRCUITRY - AC & AC/DC
- LED ultra bright light source
- 120/347VAC Input, field selectable
- 1.9W power consumption single or double face
- Emergency DC wattages as follows:
  **6VDC** = 0.9W **12VDC** = 0.9W **24VDC** = 0.9W

### CIRCUITRY - SELF-POWERED
- LED ultra bright light source
- 120/347VAC Input, field selectable
- 2.0W power consumption single or double face
- High-performance, Ni-Cad battery
- 90 or 120 minutes emergency duration
- Solid state transfer and battery charger

### MECHANICAL
Supply and install AimLite Steel LED Running Man sign in accordance with NBC2010, C22.2 No. 141. The equipment shall operate with universal AC input of 120/347V at less than 2.0W and universal DC input voltage from 6V to 24V. The housing shall be constructed of rugged steel and have a maximum depth of 2-1/4". The faceplates shall be open face type with a steel contour. The light source shall be high performing light emitting diodes (LED) and the LED lamps shall provide illumination in normal and emergency operation and shall be mounted inside the Running Man housing. A white LED sensitive diffuser shall be used to provide an evenly illuminated green and white legend. Universal models include ceiling or end mount, field installable canopy kit c/w spider plate. Universal models include ceiling or end mount, field installable canopy kit c/w spider plate.

The Running Man in a self powered configuration shall be equipped with a nickel cadmium battery and shall stay illuminated during emergency operation for at least 90 or 120 minutes upon AC fail.

### DIMENSIONS
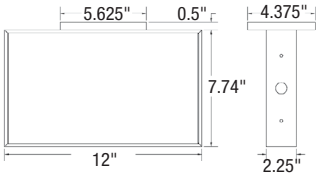




*Comes standard (single face) with three pictogram legends for direction selection.*



*Comes standard (double face) with two pictogram legends.*



*For double face no arrow options, select "0" on the options column.*

### ORDERING GUIDE

| RPST | | M | | — | | / | |
|---|---|---|---|---|---|---|---|

| Series | Nbr of faces | Mounting | Colour | DC Voltage | Options† |
|---|---|---|---|---|---|
| **RPST** | **U** - Universal faces<br>**1** - Single face<br>**2** - Double face | **M** - Universal | **WHT** - White (standard)<br>**BLK** - Black<br>**GRY** - Grey<br>**CUS** - Custom colour (please specify) | **NDC** - AC only<br>**UNVDC** - Universal DC backup voltage from 6 to 24VDC<br>**BAT** - Self-powered for 90 minutes<br>**BAT1** - Self-powered for 120 minutes | **ATD*, WRG**, K5, LXG, SPW, BKO, BNO**<br><br>**0** - No indicators (double face only)<br>**D U UR DR DL UL**<br>**Note:** Indicators option available for single & double option only. |

† For detailed options descriptions, please consult the options page.
* ATD available with BAT and BAT1.
** Specify mounting.

| | | | |
|---|---|---|---|
| WSA LIGHT ▪ ENERGY ▪ DESIGN | Project 18-21616-1<br>Iqualuit WWTP<br><br>Submitted By<br>WSA LIGHT ENERGY DESIGN LTD | Catalog Number<br>RPZN21GRY<br><br>Notes<br>2-4 weeks | Type<br>EX-XP |

# RPZN2

## Hazardous location

AC, AC/DC & Self-Powered

Project: _____

Type: _____

Catalogue #: _____

Drawn by: _____

Date: _____

The RPZN2 series of Class I, Division II / Zone 2 rated running man are designed to perform in demanding hazardous applications. The unit maintains its sealed interior with a continuous integral gasket. As well LED pilot light and test switch are sealed type.



(self powered version)

## FEATURES AND SPECIFICATIONS

### ELECTRICAL - AC/DC

- LED ultra bright light source
- 120/347VAC Input, field selectable
- 3.6 Watt power consumption
- Emergency DC wattages as follows:
  **6VDC** = 1.8W **12VDC** = 1.8W **24VDC** = 1.8W

### ELECTRICAL - SELF-POWERED

- LED ultra bright light source
- 120/347VAC Input, field selectable
- 4 Watt power consumption
- High-performance, sealed Ni-Cad battery
- 90 minutes emergency duration (standard)
- Solid state transfer and battery charger

### MECHANICAL

- Heavy-duty non-metallic, reinforced construction
- One piece, molded and gasketed lens
- Bottom hinged cover secured with two screws
- One-way breather valve for release of gases and/or moisture condensation
- All external metal hardware is stainless steel
- Single face, wall mount only
- Grey finish housing, white faceplate standard

### APPROVALS

- CSA Certified to C22.2 #137
- CSA Certified to C22.2 #141-15
- CSA Certified to C860-11
- Class I, Division 2, Groups A, B, C, D
- Class I, Zone 2, Groups IIA, IIB, IIC

### COMPLIANCE

- Meets requirements of ICES-005

LED

HAZARDOUS LOCATION

ICES 005

## DIMENSIONS

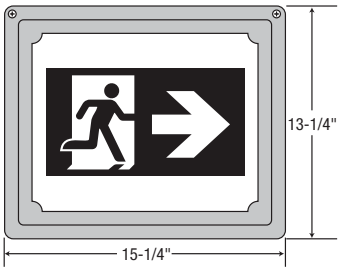


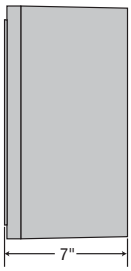




Comes standard (single face) with three pictogram legends for direction selection.

## OVERVIEW

| | |
|---|---|
| **Light source** | LED |
| **Input voltage** | 120/347V AC |
| **Input power** | 3.6W AC/DC<br>4W self-powered |
| **DC voltage** | 6VDC, 12VDC or 24VDC |
| **DC power** | 1.8W |

| | | | |
|---|---|---|---|
| WSA LIGHT ▪ ENERGY ▪ DESIGN | Project 18-21616-1<br>Iqualuit WWTP<br>Submitted By<br>WSA LIGHT ENERGY DESIGN LTD | Catalog Number<br>RPZN21GRY<br>Notes<br>2-4 weeks | Type<br>EX-XP |

# RPZN2

## ORDERING GUIDE

| RPZN2 | 1 | GRY | — | / |
|---|---|---|---|---|

| Series | Nbr of faces | Colour | Operation | Options |
|---|---|---|---|---|
| RPZN2 | 1 - Single face | GRY - Grey | UNVDC - Universal DC backup voltage from 6 to 24VDC<br>BAT - Self-powered for 90 minutes | D U UR DR DL UL |

## TEMPERATURE CODES

| | 25°C | 40°C |
|---|---|---|
| UNVDC | T6 | T6 |
| BAT | T6 | T5 |

EXIT SIGN AS SPEC 26 53 00 2.1 .8, SELF POWERED NOT ALOWED.

## Comments

All products are subject to change or may be discontinued any time without notice.

Arctic Electrical Nunavut Ltd
PO Box 1381, Iqaluit, NU X0A 0H0 -P867-975-3494

# 28 16 05 - Intrusion Detection

**Date: July 11, 2018**

REVIEWED BY CONTRACTOR
Kudlik Construction Ltd.
NAME: Sandra Rousseau P.Eng
DATE: Jul 11, 2018

# Transmittal

**Arctic Electrical Nunavut Ltd**
PO Box 1381
Iqaluit, Nu.
X0A 0H0
Phone: 867-975-3494
**From: Lee Pitcher**

**Project** **Waste Wate Treatment Plant**
**Location** Iqaluit NU
**To** Kudlik Construction
Contact: Sandra Rousseau P.Eng.
srousseau@kudlik.biz



SE-01R2
PO-P18-123

Attached are the following items:

- [x] Drawings
- [ ] Prints
- [ ] Plans
- [x] Specifications
- [ ] Information
- [ ] Submittals

Other:

THESE ARE TRANSMITTED FOR:

- [ ] Prior Approval
- [ ] Approval
- [ ] Approval as Submitted
- [ ] Approval as Noted
- [x] Resubmittal for Approval
- [ ] Corrections
- [ ] Your Use
- [ ] Review and Comment
- [ ] Record

Bids due on:
Other:

| Qty | Type | MFG | Part |
|---|---|---|---|

Section 28 16 05 Intrusion Detection

STANTEC PROJECT #: 110126045

SUBMITTAL # ELE-001-R2

This review by Stantec is for general conformance with the design concept of Stantec's design of the:

- [ ] Architectural
- [ ] Structural
- [ ] Mechanical
- [x] Electrical
- [ ] Other

component(s) only and does not mean that Stantec has verified or approves the shop drawing(s). The Contractor remains solely responsible for the shop drawing(s) and this review by Stantec does not relieve the Contractor of the Contractor's responsibility for errors or omissions in the shop drawing(s) or for meeting all requirements of the contract documents. This review does not mean that Stantec approves the detailed design inherent in the shop drawing, responsibility for which shall remain with the Contractor submitting same, nor does this review mean that Stantec accepts any deviation of the shop drawing(s) from the contract documents. The Contractor is responsible for confirming all dimensions and correlating them at the job site, for all construction means, methods and techniques, and for coordination of construction work of all trades, including coordination of all shop drawings.

Stantec

- [x] REVIEWED
- [ ] REVIEWED, AS NOTED
- [ ] REVISE AND RESUBMIT
- [ ] NOT REVIEWED

DATE 2018-07-16

BY Konrad Goluch

**Notes:**
Please review the attached approval drawings carefully. Production cannot be scheduled until a signed copy of the final approved drawing are received. Be aware that once drawings are approved, any errors due to incorrect information are the responsibility of the contractor.

Do not hesitate to contact me if you have any questions or concerns.

# B208 Octo-input Module

www.boschsecurity.com

28 16 05

BOSCH
Invented for life

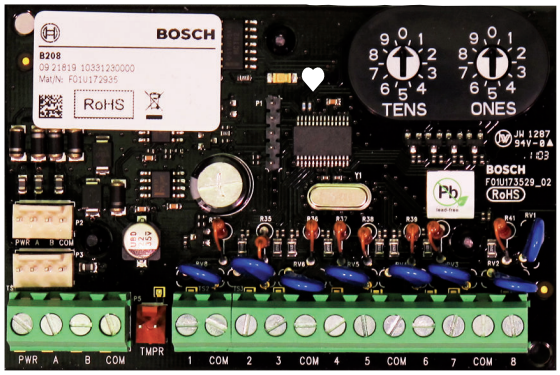


- Programmable input point functions
- Easy to read switch addressing
- 2 interconnect wiring connectors
- Provides eight points

The B208 Octo-input Module is an 8 point expansion device that connects to the control panel through the SDI2 bus. This module is fully supervised and communicates back to the control panel all point status changes. The module expansion points operate the same as the points on the control panel. Industrial, commercial, and institutional facilities are typical installations for the B208 module. The B208 connects to the SDI2 bus on the control panel using SDI2 terminals, or using the interconnect cable. You can connect multiple B208 modules to a single control panel. The B208 address switches allow for ease of use in device addressing.

## System overview

The B208 Octo-input Module connects to a control panel through the SDI2 bus. This module is supervised and communicates back to the control panel all point status changes. The module's expansion points operate the same as the points on the control panel.

## Functions

**Loop inputs**
The B208 uses up to eight inputs which may be Normally Open (NO), or Normally Closed (NC) with 1k Ω EOL resistor(s) for supervision.

## Certifications and approvals

| Region | Certification | |
|---|---|---|
| Australia | RCM | ACMA |
| Europe | CE | EMC, RoHS |
| USA | UL | |
| | UL | UL 365 - Police Station Connected Burglar Alarm Units |
| | UL | UL 609 - Standard for Local Burglar Alarm Units and Systems |
| | UL | UL 636 - Holdup Alarm Units and Systems |
| | UL | UL 864 - Standard for Control Units and Accessories for Fire Alarm Systems |
| | UL | UL 985 - Household Fire Warning System Units |
| | UL | UL 1023 - Household Burglar Alarm System Units |
| | UL | UL 1076 - Proprietary Burglar Alarm Units and Systems |
| | UL | UL 1610 - Central Station Burglar Alarm Units |
| | FM | FM 3010 - Fire Alarm Signaling Systems |
| | CSFM | see our website |

28 16 05

| Region | Certification | |
|---|---|---|
| | FCC | Part 15 Class B |
| | FDNY-CoA | 6174 |
| | FDNY-CoA | 6196 |
| Canada | ULC | CAN/ULC S303 - Local Burglar Alarm Units and Systems |
| | ULC | CAN/ULC S304 - Standard for Signal Receiving Center and Premise Burglar Alarm |
| | ULC | ULC-ORD C1023 - Household Burglar Alarm System Units |
| | ULC | ULC-ORD C1076 - Proprietary Burglar Alarm Units and Systems |
| | IC | ICES-003 - Information Technology Equipment (ITE) |

## Installation/configuration notes

### Wiring considerations

The module to the control panel using the PWR, A, B, COM terminals on the control panel using the screw terminal strip or the interconnect wiring connector. Use 12 AWG to 22 AWG (1.5 mm to 0.6 mm) wires from the module to the control panel.

### Compatibility

For UL 864 compliance, use a UL commercial fire approved control panel.

| | |
|---|---|
| Control panels | B9512G/B9512G-E (Up to 59 modules)<br>B8512G/B8512G-E (Up to 9 modules)<br>B6512 (Up to 9 modules)<br>B5512/B5512E (Up to 4 modules)<br>B4512/B4512E (Up to 2 modules)<br>D9412GV4 (Up to 24 modules)<br>D7412GV4 (Up to 7 modules)<br>D7212GV4 (Up to 3 modules) |

## Parts included

| Quantity | Component |
|---|---|
| 1 | Module |
| 1 | Hardware pack |
| 1 | Interconnect cable |
| 1 | Installation manual |

## Technical specifications

### Properties

| | |
|---|---|
| Dimensions | 2.5 in x 3.8 in x 0.60 in<br>(6.37 cm x 9.6 cm x 1.5 cm) |

### Environmental considerations

| | |
|---|---|
| Relative humidity | 5% to 93% at +32°C (+90°F) |
| Temperature (operating) | 0°C to +49°C (+32°F to +120°F) |

### Power requirements

| | |
|---|---|
| Current | 35 mA |
| Voltage | 12 VDC nominal |

### Wiring

| | |
|---|---|
| SDI2 wiring | Maximum distance – Wire size (unshielded wire only): 1000 ft (305 m) – 22 AWG (0.65 mm)<br>1000 ft (305 m) – 18 AWG (1.02 mm)<br>Unshielded wire only |

### Loop inputs

| | |
|---|---|
| Loop Inputs | Up to eight inputs. Input contacts may be Normally Open (NO) or Normally Closed (NC) with 1kΩ EOL resistor(s) for supervision. Note: Normally Closed (NC) is not permitted in Fire installations. |

## Ordering information

**B208 Octo-input Module**
Provides 8 programmable inputs.
Order number **B208**

28 16 05

**Represented by:**

**Europe, Middle East, Africa:**
Bosch Security Systems B.V.
P.O. Box 80002
5600 JB Eindhoven, The Netherlands
Phone: + 31 40 2577 284
emea.securitysystems@bosch.com
emea.boschsecurity.com

**Germany:**
Bosch Sicherheitssysteme GmbH
Robert-Bosch-Ring 5
85630 Grasbrunn
Germany
www.boschsecurity.com

**North America:**
Bosch Security Systems, Inc.
130 Perinton Parkway
Fairport, New York, 14450, USA
Phone: +1 800 289 0096
Fax: +1 585 223 9180
onlinehelp@us.bosch.com
www.boschsecurity.us

**Asia-Pacific:**
Robert Bosch (SEA) Pte Ltd, Security Systems
11 Bishan Street 21
Singapore 573943
Phone: +65 6571 2808
Fax: +65 6571 2699
apr.securitysystems@bosch.com
www.boschsecurity.asia

© Bosch Security Systems 2017 | Data subject to change without notice
2536957579 | en, V25, 17. Feb 2017

# B430 Plug-in Telephone Communicator

www.boschsecurity.com

28 16 05

BOSCH
Invented for life

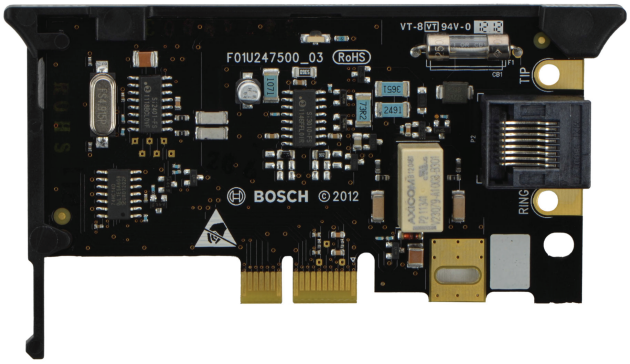


- Provides a single telephone line with RJ-45 connection for central station reporting and remote programming
- Easily configured for communications from Remote Programming Software (RPS) or a keypad, eliminating the need for separate configuration
- Easy two-step plug-in installation, troubleshooting, and maintenance

The B430 provides communication over the PSTN (Public Switched Telephone Network) by connecting the PSTN to the control panel. The module provides a single telephone jack, and easily installs into the control panel on-board plug-in module connector.

## Functions

**Central station reporting**
The B430 supports reporting to a central station receiver through the telephone lines.
**Remote programming of Bosch control panels**
The B430 supports secure RPS programming of compatible Bosch control panels.

## Certifications and approvals

| Region | FCC Details |
|---|---|
| USA | FCC Registration Number: ESVAL00BB430<br>Ringer Eq: 0.0B |

| Region | Certification | |
|---|---|---|
| Australia | RCM | ACMA |
| Europe | CE | EMC, RoHS |
| USA | UL | UL 365 - Police Station Connected Burglar Alarm Units |

| Region | Certification | |
|---|---|---|
| | UL | UL 636 - Holdup Alarm Units and Systems |
| | UL | UL 864 - Standard for Control Units and Accessories for Fire Alarm Systems |
| | UL | UL 985 - Household Fire Warning System Units |
| | UL | UL 1023 - Household Burglar Alarm System Units |
| | UL | UL 1076 - Proprietary Burglar Alarm Units and Systems |
| | UL | UL 1610 - Central Station Burglar Alarm Units |
| | CSFM | see our website |
| | FCC | Part 15 Class B |
| | FCC | Part 68 |
| | FDNY-CoA | 6174 |
| Canada | ULC | CAN/ULC S303 - Local Burglar Alarm Units and Systems |
| | ULC | CAN/ULC S304 - Standard for Signal Receiving Center and Premise Burglar Alarm |
| | ULC | CAN/ULC S545 - Residential Fire Warning System Control Units |

28 16 05

| Region | Certification | |
|---|---|---|
| | ULC | CAN/ULC S559 - Fire Signal Receiving Centres and Systems |
| | ULC | ULC-ORD C1023 - Household Burglar Alarm System Units |
| | ULC | ULC-ORD C1076 - Proprietary Burglar Alarm Units and Systems |
| | IC | ICES-003 - Information Technology Equipment (ITE) |
| Brazil | ANATEL | 1709-13-1855 [B430] |

## Installation/configuration notes

### Mounting considerations

Connect the B430 Plug-in Telephone Communicator to any compatible control panel or interface module, which can then be mounted in a variety of enclosures for optimal situations.

### Wiring considerations

The B430 connects to the control panel or interface modules without tools or physical wiring for power. It has an RJ-45 jack for plugging in the phone line (PSTN).

### Communication speed

The module communicates at 2400 baud maximum.

### Compatibility

| | |
|---|---|
| Control panels | B9512G/B9512G-E<br>B6512<br>B8512G/B8512G-E<br>B5512/B5512E<br>B4512/B4512E<br>B3512/B3512E |
| Phone cords | D161 Dual Modular Telephone Cord<br>D162 Modular Telephone Cord |
| Phone jack | D166 Telephone Jack |

## Parts included

| Quantity | Component |
|---|---|
| 1 | B430 Plug-in Telephone Communicator |
| 1 | Literature pack |

## Technical specifications

### Properties

| | |
|---|---|
| Dimensions | 2 in x 3.68 in x 0.60 in<br>(50 mm x 93.5 mm x 15.25 mm) |
| Weight | 1.3 pounds (0.6 KG) |

### Environmental considerations

| | |
|---|---|
| Relative humidity | 5% to 93% at +32°C (+90°F) |
| Temperature (operating) | 0°C to +49°C (+32°F to +120°F) |

### Power requirements

| | |
|---|---|
| Current (maximum) | Standby: 24 mA<br>Alarm: 24 mA |
| Voltage (operating) | 12 VDC nominal |

## Ordering information

**B430 Plug-in Telephone Communicator**
Plug-in PSTN communication module for control panel to central station receiver communication.
Order number **B430**

28 16 05

**Represented by:**

**Europe, Middle East, Africa:**
Bosch Security Systems B.V.
P.O. Box 80002
5600 JB Eindhoven, The Netherlands
Phone: + 31 40 2577 284
emea.securitysystems@bosch.com
emea.boschsecurity.com

**Germany:**
Bosch Sicherheitssysteme GmbH
Robert-Bosch-Ring 5
85630 Grasbrunn
Germany
www.boschsecurity.com

**North America:**
Bosch Security Systems, Inc.
130 Perinton Parkway
Fairport, New York, 14450, USA
Phone: +1 800 289 0096
Fax: +1 585 223 9180
onlinehelp@us.bosch.com
www.boschsecurity.us

**Asia-Pacific:**
Robert Bosch (SEA) Pte Ltd, Security Systems
11 Bishan Street 21
Singapore 573943
Phone: +65 6571 2808
Fax: +65 6571 2699
apr.securitysystems@bosch.com
www.boschsecurity.asia

© Bosch Security Systems 2017 | Data subject to change without notice
18964708491 | en, V8, 17. Feb 2017

# B920 Two-line Alphanumeric Keypad (SDI2)

www.boschsecurity.com

28 16 05

BOSCH
Invented for life




- 2-line LCD display with up to 32 character point, user, and area names
- Simple menu-style user interface with dedicated function buttons for common commands, including status indication
- Situation sensitive on-screen help makes system operation simple and easy
- Highly visible on (arm)/alarm, ready to turn on (arm), power and gas alarm indicators
- Simple installation with self-locking base and chassis design, plus built-in bubble level

The B920 Two-line Alphanumeric Keypad (SDI2) is a SDI2 bus compatible device. Each keypad has user adjustable options such as volume and display brightness. The B920 shows two-line system messages for all areas.

## System overview

- For commercial use, install the keypad in building entrances and areas with unrestricted access. Mounting a keypad near exterior doors in hotel or business lobbies allows people to identify the type and location of the emergency.
- For residential use, install the keypad near the front and rear entrances to the home. Install additional keypads in a kitchen or in a bedroom.
- Use multiple keypads in a large building with many separate areas of security. Program multiple keypads to control multiple areas.
- Audible tones from the keypad sounder alert personnel to fire events and assist fire fighters in locating the keypad.

## Functions

**LCD display**
The keypad uses words, numbers, and symbols to show the status of the security system. When several events occur, the keypad shows each event in order of priority.

**Keys**
Each keypad has 10 number keys, 7 function keys, and 6 navigation keys. When pressed, keys turn on keypad backlighting and emit the keypress tone (short beep). The function keys include programmable function keys and keys to initiate arming and bypassing with one keypress.

**Audible tones**
The keypad has a built-in speaker that produces several distinct warning tones. The tones are differentiated so that the user can recognize an event simply by hearing its associated tone. The keypad backlight illuminates when it emits an audible tone. Users can use a passcode to silence the tone.

28 16 05

**Status indicators**
The status indicators on the keypad provide a quick visual reference for system status.

| | |
|---|---|
| ✓ | The indicator lights when the system is ready to turn on (arm). |
| 🔒 | The indicator lights when the system is on (armed). |
| ⚠ | The indicator lights when there is a trouble condition. |
| GAS | The indicator lights when dangerous gases are present including carbon monoxide (NFPA 720). |
| 🔌 | The indicator lights when the system has power. |

## Certifications and approvals

| Region | Certification | |
|---|---|---|
| Australia | RCM | ACMA |
| Europe | CE | EMC, RoHS |
| USA | UL | |
| | UL | UL 365 - Police Station Connected Burglar Alarm Units |
| | UL | UL 609 - Standard for Local Burglar Alarm Units and Systems |
| | UL | UL 636 - Holdup Alarm Units and Systems |
| | UL | UL 985 - Household Fire Warning System Units |
| | UL | UL 1023 - Household Burglar Alarm System Units |
| | UL | UL 1076 - Proprietary Burglar Alarm Units and Systems |
| | UL | UL 1610 - Central Station Burglar Alarm Units |
| | CSFM | see our website |
| | FCC | Part 15 Class B |
| Canada | ULC | CAN/ULC S303 - Local Burglar Alarm Units and Systems |
| | ULC | CAN/ULC S304 - Standard for Signal Receiving Center and Premise Burglar Alarm |
| | ULC | CAN/ULC S545 - Residential Fire Warning System Control Units |
| | ULC | CAN/ULC S559 - Fire Signal Receiving Centres and Systems |
| | ULC | ULC-ORD C1023 - Household Burglar Alarm System Units |
| | ULC | ULC-ORD C1076 - Proprietary Burglar Alarm Units and Systems |
| | IC | ICES-003 - Information Technology Equipment (ITE) |

## Installation/configuration notes

**Mounting considerations**
Mount in indoor, dry locations.

**Power supply**
A compatible control panel supplies the power and data requirements to the keypad through a four-wire connection.

**Enclosure and wiring**
The sliding self-locking enclosure has an integrated bubble level and custom gap-free, lift-gate style terminal blocks to make installation easier.

**Compatible control panels**
B9512G/B9512G-E
B8512G/B8512G-E
B6512
B5512/B5512E firmware v2.02 and higher
B4512/B4512E firmware v2.02 and higher
B3512/B3512E firmware v2.02 and higher
D9412GV4/D7412GV4 firmware v2.02 and higher

## Parts included

| Quantity | Component |
|---|---|
| 1 | Keypad |
| 1 | Hardware pack |
| 1 | Set of ABC key labels |
| 1 | Installation Guide |
| 1 | User's Quick Reference Guide |

## Technical specifications

### Properties

| | |
|---|---|
| Dimensions | 6.2 in x 4.7 in x 1 in (158 mm x 120 mm x 26 mm) |
| Weight | 11.3 oz (0.32 kg) |
| Material | Acrylonitrile butadiene styrene (ABS)<br>Poly(methyl methacrylate) (PMMA) |
| Display window | 2 line display<br>18 characters per line |
| Indicators | Illuminated keys<br>Status indicators<br>Warning and indicating tones |

### Environmental considerations

| | |
|---|---|
| Relative humidity | 5% to 93% at +32°C (+90°F) non-condensing |
| Temperature (operating) | 0°C to +50°C (+32°F to +122°F) |

28 16 05

## Power requirements

| | |
|---|---|
| Current | Standby:35 mA<br>Alarm: 70 mA |
| Voltage (input) | 12 VDC nominal |

## Wiring

| | |
|---|---|
| Terminal wire size | 12 AWG to 22 AWG (2.0 mm to 0.65 mm) |
| SDI2 wiring | Maximum distance – wire size (unshielded wire only):<br>1000 ft (305 m) – 22 AWG (0.65 mm) |

## Ordering information

**B920 Two-line Alphanumeric Keypad (SDI2)**
Two-line alphanumeric keypad
Order number **B920**

## Accessories

**B56 Keypad Surface Mount Box**
Surface mount box for mounting a keypad to concrete or block.
Order number **B56**

**B96 Keypad Trim Bezel**
Cover the wall footprint of previous keypads when replacing them with the new, slim design of B Series keypads. The white trim bezel is 8.6 in x 6.3 in x 0.12 in (22 mm x 16 mm x 3 mm).
Order number **B96**

**Represented by:**

**Europe, Middle East, Africa:**
Bosch Security Systems B.V.
P.O. Box 80002
5600 JB Eindhoven, The Netherlands
Phone: + 31 40 2577 284
emea.securitysystems@bosch.com
emea.boschsecurity.com

**Germany:**
Bosch Sicherheitssysteme GmbH
Robert-Bosch-Ring 5
85630 Grasbrunn
Germany
www.boschsecurity.com

**North America:**
Bosch Security Systems, Inc.
130 Perinton Parkway
Fairport, New York, 14450, USA
Phone: +1 800 289 0096
Fax: +1 585 223 9180
onlinehelp@us.bosch.com
www.boschsecurity.us

**Asia-Pacific:**
Robert Bosch (SEA) Pte Ltd, Security Systems
11 Bishan Street 21
Singapore 573943
Phone: +65 6571 2808
Fax: +65 6571 2699
apr.securitysystems@bosch.com
www.boschsecurity.asia

© Bosch Security Systems 2017 | Data subject to change without notice
9973643275 | en, V16, 17. Feb 2017

# B8103 Enclosure

www.boschsecurity.com

28 16 05

BOSCH
Invented for life



- Easy-to-install standoff location for mounting supported modules
- Made with cold-rolled steel with a white semi-gloss finish
- Easy access locations for battery placement
- Optional tamper switch mounting location

The enclosure houses many control panels and modules by Bosch. It is compatible with an enclosure tamper switch and can hold up to two batteries. Use the enclosure for residential fire and burglary installations and commercial burglary applications that do not require attack resistance.

## Certifications and approvals

| Region | Certification | |
|---|---|---|
| USA | UL | UL 294 - Standard for Access Control Units and Systems |
| | UL | UL 365 - Police Station Connected Burglar Alarm Units |
| | UL | UL 609 - Standard for Local Burglar Alarm Units and Systems |
| | UL | UL 864 - Standard for Control Units and Accessories for Fire Alarm Systems |
| | UL | UL 985 - Household Fire Warning System Units |
| | UL | UL 1023 - Household Burglar Alarm System Units |
| | UL | UL 1610 - Central Station Burglar Alarm Units |
| | UL | UL 1635 - Standard for Digital Alarm Communicator System Units |
| | CSFM | see our website |
| | FDNY-CoA | 6196 |
| Canada | ULC | CAN/ULC S303 - Local Burglar Alarm Units and Systems |
| | ULC | CAN/ULC S304 - Standard for Signal Receiving Center and Premise Burglar Alarm |
| | ULC | ULC-ORD C1023 - Household Burglar Alarm System Units |

## Installation/configuration notes

**Compatible locksets**
D101 (Key #1358)
D101F (Key #203)

**Compatible tamper switches**
D110
ICP-EZTS

28 16 05

## Parts included

| Quantity | Component |
|---|---|
| 1 | Enclosure |
| 1 | Hardware pack |
| 1 | Literature pack |

## Technical specifications

| | |
|---|---|
| Dimensions | 41 cm x 41 cm x 9 cm<br>(16 in. x 16 in. x 3.5 in.) |
| Weight | 4.5 kg (10 lb) |
| Material | Cold-rolled steel |
| Color | White |

## Ordering information

**B8103 Enclosure**
White steel enclosure measuring 41 cm x 41 cm x 9 cm (16 in. x 16 in. x 3.5 in.).
Order number **B8103**

**Represented by:**

**Europe, Middle East, Africa:**
Bosch Security Systems B.V.
P.O. Box 80002
5600 JB Eindhoven, The Netherlands
Phone: + 31 40 2577 284
emea.securitysystems@bosch.com
emea.boschsecurity.com

**Germany:**
Bosch Sicherheitssysteme GmbH
Robert-Bosch-Ring 5
85630 Grasbrunn
Germany
www.boschsecurity.com

**North America:**
Bosch Security Systems, Inc.
130 Perinton Parkway
Fairport, New York, 14450, USA
Phone: +1 800 289 0096
Fax: +1 585 223 9180
onlinehelp@us.bosch.com
www.boschsecurity.us

**Asia-Pacific:**
Robert Bosch (SEA) Pte Ltd, Security Systems
11 Bishan Street 21
Singapore 573943
Phone: +65 6571 2808
Fax: +65 6571 2699
apr.securitysystems@bosch.com
www.boschsecurity.asia

© Bosch Security Systems 2017 | Data subject to change without notice
18395968139 | en, V11, 21. Mar 2017

# B8512G Control Panels

www.boschsecurity.com

28 16 05

BOSCH
Invented for life

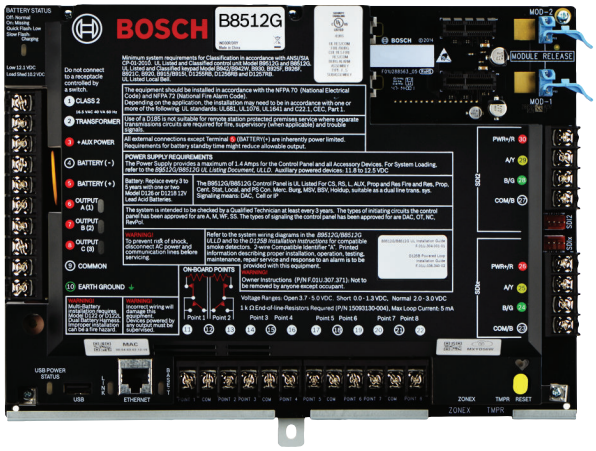


- Fully integrated intrusion, fire, and access control allows users to interface with one system instead of three
- Provides up to 99 points using a combination of hardwired or wireless devices for installation flexibility, and up to 8 areas and 8 doors for up to 500 users
- On-board Ethernet port for Conettix IP alarm communication and remote programming, compatible with modern IP networks including IPv6/IPv4, Auto-IP, and Universal Plug and Play
- Installer-friendly features for simple installation and communications, including on-board USB for easy on-site RPS programming, plus support for Remote Connect Service (not available in Europe, the Middle East, or Africa), and plug-in PSTN and cellular communication modules for simple installation and communications
- Remote Security Control (RSC) app which allows users to control their security systems – and view system cameras - remotely from mobile devices such as phones and tablets

The B9512G Control Panel and the B8512G Control Panel are the new premier commercial control panels from Bosch. B8512G control panels integrate intrusion, fire, and access control providing one simple user interface for all systems.
With the ability to adapt to large and small applications, the B8512G provides up to 99 individually identified points that can be split into 8 areas.
The control panel can communicate through its built-in Ethernet port (not applicable to “E” control panels), or through compatible plug-in modules that can send events over the public switched telephone network (PSTN) or over cellular network communications.

For users, programmable keypad shortcuts, situation sensitive on-screen help, and a bilingual user interface make system operation simple and easy.
With the B8512G, you can:

- Monitor alarm points for intruder, gas, or fire alarms.
- Program all system functions local or remote using Remote Programming Software (RPS) or by using basic programming through the keypad.
- Add up to 8 doors of access control using the optional B901 Access Control Module or D9210C Access Control Interface Module.

The B8512G is a direct replacement for previous control panel models D7412GV4, D7412GV3, D7412GV2, and D7412G.

28 16 05

## Functions

**Programmable outputs**
- Four alarm-output patterns
- Programmable bell test

**Point response**
- Selectable point response time
- Selectable EOL values and configuration
- Cross point capability
- Fire alarm verification
- Dangerous gas indicator includes carbon monoxide (NFPA 720)
- Watch mode
- Selectable point response time

**User interface**
- Supervision of up to 32 keypads
- Custom keypad text is fully programmable through RPS
- Full function menu including customizable shortcuts
- Authority by area and 32 character name for each user
- 14 custom authority levels to restrict system features that each user can access
- Programmable primary and secondary language by user and keypad; select from English, Spanish, French, and Portuguese

**Area configurations**
Link multiple areas to a shared area such as a lobby or common entryway. The shared area then automatically turns On (arms) when all associate areas are armed and turns Off (disarms) when any one associate area is disarmed. For higher security applications, the Area Re-Arm feature guarantees that areas are always rearmed, and are disarmed for no longer than a specific, configurable, amount of time (for example, service time).

**Custom functions**
For added convenience, the installer can program custom functions that allow customers to complete complex tasks with one simple action. For example, a custom function can bypass a group of points and arm the system, allowing the user to perform these functions with one easy command. Users can activate custom functions with a keypad, keyfob, token, or card, or the control panel can activate a function in reaction to a faulted point, or automatically through a scheduled event (SKED).

**Passcode security**
- Two-man rule. Requires two people with two unique passcodes to be present at the time of opening.
- Early ambush. Allows users to verify that the facility is safe by requiring two passcodes. The control panel sends a duress event if the user does not enter the passcode a second time after inspecting the premises.
- Dual authentication. Requires two forms of identification before processing certain system commands, including turning off the system and opening doors. A standard system user must have a passcode, a credential (token or card), and appropriate command authority permissions.

**Door control**
Using the B901 Access Control Module or D9210C Access Control Interface Module, the control panel provides a fully supervised access control solution. The solution offers 14 programmable levels of access authority. Authority for door access is controlled by the user level, the group of the user, the time of day, the door state, and the area armed (On/Off) state.

**Easy exit control**
The control panel changes from one On (armed) state to another without turning off (disarming) the system. For example, if you change the state from Part On (Perimeter Arm) to All On (Master Arm), the control panel complies and reports the change. Easy Exit Control reduces the number of keystrokes, simplifying system operation.

**Programmable passcode-controlled menu list**
Passcode-controlled shortcuts provide users only with the options and information pertinent to them, simplifying system operation.

**Flexible control**
The system provides the flexibility to choose added convenience or high security. For example, you can restrict to a keypad's immediate local area turning on (arming) and turning off (disarming) the system with a passcode, even if the user has access to other areas. This is particularly useful for high security areas, where a user may have access to the area, but would prefer to only turn off (disarm) the area individually rather than with the rest of the system.

**Monitor Delay/Delayed Response**
Create a special point index that delays the reaction of a point for a specified time (up to 1 hour in minutes and seconds). This delay provides time for the specified condition to reset before activating any annunciation. The system can annunciate locally and send a report, if desired. When the system is armed, the point can respond like a normal point – providing dual functionality. Use this feature to ensure that perimeter doors have not been propped open, or to monitor critical areas such as computer rooms and safes, for example.

**System users**
The system supports up to 500 users. Each user can have a personalized passcode, a wireless keyfob, and a credential to control the system. You can assign passcodes to one of 14 customized authority levels in each area that can be restricted to operate only during certain times. You can program a primary and secondary language for each user and by keypad (select from English, Spanish, French, and Portuguese). The keypad changes to the user's programmed language when the user enters his passcode or holds the Help key.

28 16 05

**Communication formats**
The control panel prioritizes and sends reports to four route groups. Network and phone communications can use one of two communication formats: Modem4, Contact ID. Each group has a programmable primary and backup destination.
The control panel provides flexible communications for most central stations with reporting capabilities such as:
- Individual point numbers
- Opening or closing reports by user and area number
- Remote programming attempts
- Diagnostic reports

**IP communication**
The control panel can use IP to communicate with a Conettix D6600 or a Conettix D6100IPv6 Communications Receiver/Gateway. Use one of the following for IP:
- The on-board Ethernet connection (the on-board Ethernet port is excluded on “E” versions).
- A B426.
- A plug-in cellular communicator (B440/B440-C/B441/B441-C/B442/B443/B444).

Conettix IP communication provides a secure path that includes anti-replay/anti-substitution features, and enhanced security with up to AES 256-bit encryption (using Cipher Block Chaining (CBC)).
The control panel supports Domain Name System (DNS) for both remote programming and central station communication. DNS provides ease of use, eliminating the need to use static IP addresses as your reporting destination, and accommodates a simple solution for central station disaster recovery. The control panel supports both IPv6 and IPv4 networks.

**Communication paths**
The control panel accommodates up to four separate phone and four separate network paths to the central station receiver. When resetting alarms or turning a system on and off, the user is identified by name and number.

**Personal notification**
The control panel can send text messages and emails for personal notification over Ethernet or using a cellular communicator. You can configure up to 32 destinations using a combination of cellular phone numbers and email addresses. The control panel sends notifications in the user’s programmed primary language.

**Bosch Remote Connect (Cloud)**
Remote Connect simplifies connections from RPS, and the Remote Security Control app, using Bosch Cloud services. This service creates a secure connection to the control panel without specific router settings or the need for a static IP address or DNS.

**Notice**
The Bosch Remote Connect service is not available in Europe, the Middle East, or Africa.

**Firmware updates**
The system allows remote firmware updates:
- Control panel updates. Remotely update the control panel firmware for easy feature enhancements without replacing ROM chips.
- Module update support. Remotely update the firmware on connected SDI2 modules for easy feature enhancements without visiting each individual module.

Firmware updates occur through Remote Programming Software (RPS) and the RPS Firmware Update Wizard. The Firmware Update Wizard uses the on-board USB connection or the on-board Ethernet (IP) connection (the on-board Ethernet port is excluded on “E” versions) to transfer firmware updates.
The control panel can optionally receive firmware updates from RPS. Use one of the following communication methods:
- B426
- Plug-in cellular communicator: B440/B440-C/B441/B441-C/B442/B443/B444

**Notice**
Data rate apply
Cellular firmware updates require more time than Ethernet updates and carrier data rates apply.

**A wide variety of input options**
Each point:
- Single 1 kΩ, single 2 kΩ, dual 1 kΩ (1 kΩ + 1 kΩ), and No EOL (end-of-line) (EOL) resistor options (for on-board and B208 inputs)
- Programmable for Fire, Intrusion, Access, Gas, and Supervisory devices
- Supports hardwired and wireless devices
- Supports IP cameras by Bosch as point and output devices

**IP camera support**
The control panel can integrate directly with Bosch IP cameras, using them as fully supervised points and outputs.
Integration of cameras allows the camera’s video motion detection to activate points on the control panel. The control panel’s virtual outputs can be configured to trigger camera actions, including sending video snapshots via email.

**Security and fire detection**
The control panel provides eight on-board points, and up to 91 additional off-board points (depending on model and expansion interfaces). You can program individual points to monitor some types of burglar alarms, fire alarms, and supervision devices.

28 16 05

**Event log**
The event log stores up to 2048 local and reported events. The event log includes time, date, event, area, point, and user. View the event log from a keypad or use RPS to remotely retrieve event information. When the event log reaches a programmed threshold of stored events, it can send an optional report to a receiver.

**Scheduled events (SKEDs)**
The internal clock and calendar start individually scheduled events (SKEDs). SKEDs perform several functions such as turn on or off, relay control, or point bypassing.
The control panel offers:
- 40 scheduled events with up to 31 different functions
- 8 opening windows and 8 closing windows
- 8 user group windows
- Day-of-week, date-of-month, or holiday only schedules
- 4 holiday schedules of 366 days (leap year)

**Dual bus and SDI keypad retrofits**
The dual SDI2 device bus design provides greater installation flexibility, such as bus isolation for Intrusion and Fire. To use popular SDI keypads (for example D1255 and D1260), program one of the two SDI2 buses for SDI operation.

**ZONEX and POPEX retrofits**
To retrofit legacy Bosch control panels that use ZONEX and POPEX devices, the control panel is compatible with the B600 Retrofit (ZONEX) Module. The B600 adds two ZONEX buses to the control panel which can connect to existing legacy point bus (POPEX) devices (for example, the D8125).

**Programming**
Installers can perform limited programming on-site with a keypad (critical parameters; such as account IDs, central station and RPS IP addresses and phone numbers, reporting formats, and more). They can also do full programming on-site or remotely (attended or unattended) with RPS. A programmable system passcode prevents unauthorized remote programming.

**Diagnostics**
Keypads and RPS offer diagnostic help for monitoring and troubleshooting. The diagnostics features allow you to view the status of the wired and wireless devices. The features provide the status of the control panel and its connected devices, such as firmware version, power, and missing conditions. View the status of each area.

**Remote Security Control app**
The Remote Security Control (RSC) app allows users to control their security systems remotely from their devices. Users can:
- Turn their security system On or Off
- Turn specific areas On or Off
- Control outputs for applications such as lighting control
- View live video from Bosch IP cameras
- Grant access remotely by unlocking and locking doors

The app requires the installing dealer to create a Remote Access Profile for users, and to install the profile on their devices.

**Bosch Video Management System integration**
With Bosch Video Management System (Bosch VMS) and an intrusion system, the VMS operator has a single user interface to monitor and control the intrusion system combined with video surveillance. With Bosch VMS and a control panel, the operator can, for example:
- View videos triggered by intrusion events, including all relevant information such as areas, point, and user show in the display with the event.
- View areas, points, outputs, and doors – with their statuses – on the Bosch VMS map, providing the exact location in the system.
- Turn on (arm) and turn off (disarm) areas.
- Bypass and unbypass points.
- Lock and unlock doors (Bosch VMS 6.0 and higher).

Requirements to integrate Bosch VMS with a control panel:
- A licensed Bosch VMS system using Professional Editions v5.5 or higher or Bosch VMS Enterprise Edition v5.5 or higher.
- Expansion license to integrate the intrusion control panel. One license needed per control panel. Order number MBX-XINT-xx for the expansion license added to a Bosch VMS base license. Refer to the Bosch Video Management Software product page on the Bosch website, www.boschsecurity.com.
- Access to Remote Programming Software (RPS).

## Certifications and approvals

| Region | Regulatory compliance/quality marks | |
|---|---|---|
| USA | ANSI-SIA | CP-01-2010-Control Panel Standard - Features for False Alarm Reduction |
| Australia | RCM | [B9512G] |
| | RCM | [B8512G] |
| | RCM | ACMA |
| Europe | CE | EMC, LVD, RoHS [B9512G, B9512G-E, B8512G, B8512G-E] |
| USA | UL | [B9512G, B9512G-E, B8512G, B8512G-E, B299, B600, B901, B925F, B926F] |
| | UL | UL 294 - Standard for Access Control Units and Systems |
| | UL | UL 365 - Police Station Connected Burglar Alarm Units |
| | UL | UL 609 - Standard for Local Burglar Alarm Units and Systems |
| | UL | UL 636 - Holdup Alarm Units and Systems |
| | UL | UL 864 - Standard for Control Units and Accessories for Fire Alarm Systems |
| | UL | UL 985 - Household Fire Warning System Units |

28 16 05

| Region | Regulatory compliance/quality marks | |
|---|---|---|
| | UL | UL 1023 - Household Burglar Alarm System Units |
| | UL | UL 1076 - Proprietary Burglar Alarm Units and Systems |
| | UL | UL 1610 - Central Station Burglar Alarm Units |
| | UL | UL 1635 - Standard for Digital Alarm Communicator System Units |
| | FM | Central Station |
| | FM | Local Protective Signaling |
| | FM | Remote Station |
| | CSFM | California State Fire Marshal (see our website) |
| | FCC | Part 15 Class B |
| | FDNY-CoA | Fire Department of New York City [B9512G, B9512G-E, B8512G, B8512G-E] |
| Canada | ULC | [B9512G, B9512G-E, B8512G, B8512G-E, B299, B600, B901, B925F, B926F] |
| | ULC | CAN/ULC S303 - Local Burglar Alarm Units and Systems |
| | ULC | CAN/ULC S304 - Standard for Signal Receiving Center and Premise Burglar Alarm |
| | ULC | CAN/ULC S545 - Residential Fire Warning System Control Units |
| | ULC | CAN/ULC S559 - Fire Signal Receiving Centres and Systems |
| | ULC | ULC-ORD C1023 - Household Burglar Alarm System Units |
| | ULC | ULC-ORD C1076 - Proprietary Burglar Alarm Units and Systems |
| | IC | ICES-003 - Information Technology Equipment (ITE) |
| Brazil | ANATEL | 04450-16-01855 [B9512G, B8512G when used with B430 or B442] |

## Installation/configuration notes

**Notice**
Not all products and features are available in all regions. Consult your local Bosch representative for availability details.

### Compatible products

#### Keypads

B942/B942W Touch Screen Keypad (SDI2)

B930 ATM Style Alphanumeric Keypad (SDI2)

B926F Fire Keypad (SDI2)

B925F Fire Keypad (SDI2)

B921C Two-line Capacitive Keypad (SDI2)

B920 Two-line Alphanumeric Keypad (SDI2)

B915/B915I Basic Keypad (SDI2)

D1255 Series Keypads

D1260 Series Keypads

D1256RB Fire Keypad

D1257RB Remote Fire Alarm Annunciator

#### Power

D1640 16.5 VAC 40 VA Transformer

DE-45-18 Transformer

D126 Standby Battery (12 V, 7 Ah)

D1218 Battery (12 V, 18 Ah)

D122 Dual Battery Harness

D122L Dual Battery Harness with Long Leads

#### Enclosures

B8103 Universal Enclosure (White)

D8103 Universal Enclosure (Gray)

D8108A Attack Resistant Enclosure

D8108A-CE Attack Resistant Enclosure with Built-in Transformer

D8109 Fire Enclosure

#### Accessories

B56 Keypad Surface Mount Box

B96 Keypad Trim Bezel

B99 USB Direct Connect Cable

B501-10 Interconnect wiring cables (pack of 10)

D161 Dual Modular Telephone Cord (7 f)

D162 Modular Telephone Cord (2 ft)

D166 Telephone Jack (RJ31X)

#### Detectors

D7050 Series Addressable Photoelectric Smoke and Smoke Heat Detector Heads

F220-B6PM/S 12/24 VDC Addressable Detector Bases with POPITs

F220-B6 12/24 VDC Two-wire Base

F220-B6R Standard 12/24 VDC Four-wire Base)

F220-P Photoelectric Smoke Detector

28 16 05

F220-PTH Photoelectric Smoke Detector with +135°F (+57°C) Heat Sensor

F220-PTH Photoelectric Smoke Detector with +135°F (+57°C) Heat Sensor and Carbon Monoxide Sensors

F220-B6C 12/24 VDC Four-wire Base with Auxiliary Form C Relay

FCC-380 Carbon Monoxide Detector

FCH-T320 Heat Detector

FCP-OT320 Multisensor Detector Optical/Thermal

FCP-O320 Optical Smoke Detector

MX775i Addressable PIR Detector

MX794i Long Range Multiplex PIR Detector

MX934i Addressable PIR Detector

MX938i Addressable PIR Detector

ZX776Z PIR Detector

ZX794Z Long Range PIR Detector

ZX835 TriTech Microwave/PIR Detector

ZX935Z PIR Detector

ZX938Z PIR Detector

ZX970 PIR/Microwave Detector

Bosch conventional detectors, including Professional Series, Blue Line Gen2, Blue Line, Classic Line, Commercial Line, and Ceiling Mount motion detectors, as well as glass break, seismic, request-to-exit, photoelectric, heat, and smoke detectors.

**Modules**

B208 Octo-input Module

B299 POPEX Module

B308 Octo-output Module

B426 Conettix Ethernet Communication Module

B430 Plug-in Telephone Communicator

B440 Conettix Plug-in Cellular Communicator (using 3G)

B441 Conettix Plug-in Cellular Communicator (using CDMA)

B442 Conettix Plug-in Cellular Communicator (using GPRS)

B443 Conettix Plug-in Cellular Communicator (using HSPA+)

B450 Conettix Plug-in Communicator Interface

B520 Auxiliary Power Supply Module

B600 Retrofit (ZONEX) Module

B810 wireless receiver (RADION)

B820 SDI2 Inovonics Interface Module

B901 Access Control Module

D113 Battery Lead Supervision Module

D125B Dual Class B Initiating Module

D126 Standby Battery (12 V, 7 Ah)

D129 Class A Initiating Module

D130 Auxiliary Relay Module

D132A Smoke Detector Reversing Relay Module

D133 Single Relay Module

D134 Dual Relay Module

D185 Reverse Polarity Signaling Module

D192G Class “B”, Style Y Bell Circuit Supervision

D1218 Battery (12 V, 18 Ah)

D8125 Addressable Expansion Module

D8125MUX Multiplex Bus Interface

D8128D OctoPOPIT Eight-point Expander

D8129 Octo-relay Module

D8130 Door Release Module

D9127U/T POPIT Module

DS7461i Single-zone Input Module

DS7465i Input-output Module

D9210C Access Control Interface Module

ICP-EZTS Cover and Wall Tamper Switch

ICP-SDI-9114 SDI Splitter

**Applications**

Remote Programming Software (RPS or RPS-LITE) v6.03 and higher

Bosch Video Management System v5.5 and higher

Remote Security Control (RSC)

**Conettix receivers**
(Managed and configured with Conettix D6200 Programming/ Administration Software v2.10)

Conettix D6600 Communications Receiver/Gateway (with only D6641 line cards installed) with CPU version 01.10.00

Conettix D6100IPv6 Communications Receiver/Gateway with CPU version 61.10.00

Conettix D6100i Communications Receiver/Gateway with CPU version 61.10.00

**RADION wireless from Bosch**

B810 wireless receiver (RADION)

RFBT-A/RFBT bill trap

RFDL-11-A/RFDL-11 TriTech motion detector

RFDW-RM-A/RFDW-RM recessed mount door/window contact

28 16 05

RFDW-SM-A/RFDW-SM surface mount door/window contact

RFGB-A/RFGB glass break detector

RFKF-A/RFKF two-button keyfob

RFKF-FBS-A/RFKF-FBS four-button keyfob

RFKF-TBS-A/RFKF-TBS two-button keyfob

RFPB-SB-A/ RFPB-SB single-button panic

RFPB-TB-A/RFPB-TB two-button panic

RFRP-A/RFRP repeater

RFSM-A/RFSM smoke detector

RFPR-12-A/RFPR-12 PIR motion detector

RFPR-C12-A/RFPR-C12 PIR curtain motion detector

RFUN-A/RFUN universal transmitter

### Inovonics Wireless

B820 SDI2 Inovonics Interface Module

ENKIT-SDI2 SDI2 Inovonics Interface and Receiver Kit. Includes B820 and EN4200

EN1210 Universal Transmitter (Single-input)

EN1210EOL Universal Transmitter with EOL Resistor

EN1210W Door-Window Transmitter with Reed Switch

EN1215EOL Universal Transmitter with Wall Tamper, Reed Switch, and EOL Resistor

EN1223D Water-resistant Pendant Transmitter (Double-button)

EN1223S Water-resistant Pendant Transmitter (Single-button)

EN1224-ON Multiple-Condition Pendant Transmitter

EN1233D Necklace Pendant Transmitter (Double-button)

EN1233S Necklace Pendant Transmitter (Single-button)

EN1235D Beltclip Pendant Transmitter (Double-button)

EN1235DF Fixed-location Transmitter (Double-button)

EN1235S Beltclip Pendant Transmitter (Single-button)

EN1235SF Fixed-location Transmitter (Single-button)

EN1247 Glass-break Detector Transmitter

EN1249 Bill Trap Transmitter

EN1242 Smoke Detector Transmitter

EN1260 Wall Mount Motion Detector

EN1261HT High Traffic Motion Detector

EN1262 Motion Detector with Pet Immunity

EN1265 360° Ceiling Mount Motion Detector

EN4200 Serial Receiver

EN5040-T High Power Repeater with Transformer

## Technical specifications

### Properties

| | |
|---|---|
| Dimensions | 10.625 in x 7.75in x 1.875 in (26.99 x 19.69 x 4.76 cm) |
| Weight | 1.95 lbs (0.88 kg) |

### Communications

| | |
|---|---|
| Ethernet | 10/100 full duplex (N/A for “E” control panels) |

### Environmental considerations

| | |
|---|---|
| Relative humidity | 5% to 93% at +32°C (+90°F) |
| Temperature (operating) | 0°C to +49°C (+32°F to +120°F) |

### Power requirements

| | |
|---|---|
| Current (maximum) | Standby: 180 mA<br>Alarm: 260 mA |
| Output (alarm) | 2 A at 12 VDC |
| Output (auxiliary, continuous power, and switched auxiliary combined) | 1.4 A at 12 VDC nominal |
| Voltage (operating) | 12 VDC nominal |
| Voltage (AC) | 16.5 VAC 40 VA plug-in transformer (D1640/D1640-CA) |

### Wiring

| | |
|---|---|
| Terminal wire size | 12 AWG to 22 AWG (2.0 mm to 0.65 mm) |
| SDI2 wiring | Maximum distance – Wire size (unshielded wire only): 7,500 ft (2,286 m) – 22 AWG (0.65 mm) |

### Number of...

| | |
|---|---|
| Areas | 8 |
| Custom functions | 8 |
| Events | Up to 2048 |
| Passcode users | 500, plus 1 Installer passcode |
| Points | 99 (8 on-board, up to 91 off-board and virtual) |
| Programmable outputs | 99 (3 on-board, up to 96 off-board and virtual) |
| RF points | 91 |

28 16 05

| | |
|---|---|
| IP cameras | 8 |
| SKEDs | 40 |

## Ordering information

**B8512G IP control panel, 8 areas, 99 points**
Supports up to 99 points, 3 on-board outputs, and 8 areas for intrusion, commercial fire. On-board Ethernet.
Order number **B8512G**

**B8512G-E Control panel, 8 areas, 99 points, no IP**
The B8512G-E is available only in kits.
Order number **B8512G-E**

**B901 Door Controller**
Fully supervised, addressable SDI2/SDI bus device that allows access control integration for Bosch G and B Series Control Panels.
Order number **B901**

**Accessories**

**B520 Auxiliary power supply module, 2A 12V**
Provides auxiliary power to 12 VDC devices or to SDI2 modules.
Order number **B520**

**B208 SDI2 8-Input Expansion Module**
Provides 8 programmable inputs.
Order number **B208**

**B308 SDI2 8-Output Expansion Module**
Provides 8 programmable relays.
Order number **B308**

**B810 RECEIVER-SDI2**
Receives RF signals from RADION transmitters, repeaters, and glassbreaks. Operates at 433.42 MHz. For use with compatible SDI2 bus control panels.
Order number **B810**

**D122 Dual battery harness, 17" 18AWG**
Harness with circuit breaker. Connects two batteries (in parallel) to a compatible control panel.
Order number **D122**

**D122L Dual battery harness, 35", 12V**
Harness with circuit breaker and leads measuring 35 in. (89 cm). Connects two batteries (in parallel) to a compatible control panel in a separate enclosure.
Order number **D122L**

**D126 Battery, 12V 7Ah**
A rechargeable sealed lead-acid power supply used as a secondary power supply or in auxiliary or ancillary functions.
Order number **D126**

**D1218 Battery, 12V 18Ah**
The D1218 is a 12 V 18 Ah sealed lead-acid battery with two bolt-fastened terminals. It is used for standby and auxiliary power. It connects to a compatible control panel using a D122 or D122L Dual battery harness.
Order number **D1218**

**D137 Accessory mounting bracket for enclosure**
Used to mount accessory modules in B8103, D8103, D8108A, and D8109 enclosures.
Order number **D137**

**D1640 Transformer plug-in, 16V 40VA**
System transformer rated at 16.5 VAC, 40 VA.
Order number **D1640**

**D1640-CA 16VAC 40VA xfmr Canada**
For use in Canada. System transformer rated at 16.5 VAC, 40 VA.
Order number **D1640-CA**

**D9002-5 Mounting plate, 6 location 3-hole, 5 pcs**
5 pack of mounting skirts for B8103, D8103, D8108A, and D8109 enclosures. Each skirt can hold up to six standard 3-hole mounting modules.
Order number **D9002-5**

**D101 Enclosure lock and key set**
Short-body lock set with one key supplied. Uses the D102 (#1358) replacement key.
Order number **D101**

**D110 TAMPER SWITCH 2/PKG**
Screw-on tamper switch that fits all enclosures. Shipped in packages of two.
Order number **D110**

**ICP-EZTS TAMPER SWITCH-DUAL**
Combination tamper switch with a wire loop for additional tamper outputs.
Order number **ICP-EZTS**

**B8103 Universal enclosure, white**
White steel enclosure measuring 41 cm x 41 cm x 9 cm (16 in. x 16 in. x 3.5 in.).
Order number **B8103**

**D8103 Steel enclosure, large, grey**
Grey steel enclosure measuring 41 cm x 41 cm x 9 cm (16 in. x 16 in. x 3.5 in.).
Order number **D8103**

**D8108A Attack resistant enclosure, large, grey**
Grey steel enclosure measuring 41 cm x 41 cm x 9 cm (16 in. x 16 in. x 3.5 in.). UL Listed. Includes a lock and key set.
Order number **D8108A**

28 16 05

**D8109 Fire enclosure, 16x16x3.5", red**
Red enclosure measuring 16 in. x 16 in. x 3.5 in. (41 cm x 41 cm x 9 cm). Made from 16 gauge (1.5 mm) cold-rolled steel with a full-length hinge. Includes a lock and key set. UL Listed for commercial fire/ burglary alarm applications.
Order number **D8109**

**D8004 Transformer enclosure kit, grey**
For applications that might require a remote transformer in an enclosure. Can be used with B Series control panels and D9412GV4/D7412GV4 control panels.
Order number **D8004**

**BATB-40 Battery box/enclosure, 22x20.75x7.25"**
Holds two dry or wet cell batteries. Optional BATB-SHELF battery shelf increases number of batteries. Suitable for residential/commercial fire or burglary applications.
Order number **BATB-40**

**BATB-80 Battery box/enclosure, 14x20.75x7.25"**
Battery box/enclosure with shelf holds up to four dry or wet cell batteries. Suitable for residential/ commercial fire or burglary applications.
Order number **BATB-80**

**B99 USB direct connect cable**
Male A to Male A USB cable for local programming of control panels with on-board USB ports.
Order number **B99**

**B915 Basic Keypad**
Two-line alphanumeric basic keypad with English function keys.
Order number **B915**

**B915I LCD keypad, icon keys, SDI2**
Two-line alphanumeric basic keypad with icon function keys.
Order number **B915I**

**B920 2 Line Alpha Numeric Keypad (SDI2)**
Two-line alphanumeric keypad
Order number **B920**

**B921C Two-line Keypad w/Touch keys, Inputs**
Two-line alphanumeric keypad with inputs and capacitive touch keys in black.
Order number **B921C**

**B930 ATM Style-Alpha Numeric Keypad (SD12)**
Five-line ATM style alphanumeric keypad
Order number **B930**

**B942 Touch Screen KP Prox/Input/Output, black**
Black SDI2 touch screen keypad with inputs and one output.
Order number **B942**

**B942W Touch screen KP, prox/input/output,white**
White SDI2 touch screen keypad with inputs and one output.
Order number **B942W**

**B925F Fire and intrusion keypad, SDI2**
Two-line alphanumeric fire and intrusion keypad.
Order number **B925F**

**B926F Fire keypad, SDI2**
Two-line alphanumeric fire keypad
Order number **B926F**

**Software Options**

**D5500C-USB Kit with DVD and USB security dongle**
Account management and control panel programming software with USB security key (dongle).
Order number **D5500C-USB**

28 16 05

**Represented by:**

**Europe, Middle East, Africa:**
Bosch Security Systems B.V.
P.O. Box 80002
5600 JB Eindhoven, The Netherlands
Phone: + 31 40 2577 284
emea.securitysystems@bosch.com
emea.boschsecurity.com

**Germany:**
Bosch Sicherheitssysteme GmbH
Robert-Bosch-Ring 5
85630 Grasbrunn
Germany
www.boschsecurity.com

**North America:**
Bosch Security Systems, Inc.
130 Perinton Parkway
Fairport, New York, 14450, USA
Phone: +1 800 289 0096
Fax: +1 585 223 9180
onlinehelp@us.bosch.com
www.boschsecurity.us

**Asia-Pacific:**
Robert Bosch (SEA) Pte Ltd, Security Systems
11 Bishan Street 21
Singapore 573943
Phone: +65 6571 2808
Fax: +65 6571 2699
apr.securitysystems@bosch.com
www.boschsecurity.asia

© Bosch Security Systems 2017 | Data subject to change without notice
13825824395 | en, V23, 22. Aug 2017

# D101 Lock and Key Set

www.boschsecurity.com

28 16 05

BOSCH
Invented for life




Short-body lock set with one key supplied. Uses the D102 (#1358) replacement key.

## Ordering information

**D101 Lock and Key Set**
Short-body lock set with one key supplied. Uses the D102 (#1358) replacement key.
Order number **D101**

# D122L Dual Battery Harness with Long Leads

www.boschsecurity.com

28 16 05

BOSCH
Invented for life



Color-coded wire harness with circuit breaker to protect the charging circuit when connecting multiple 12 V batteries to a control panel. The leads accommodate the installation of extra 12 V batteries in an adjacent enclosure.

## Certifications and approvals

| Region | Certification | |
|---|---|---|
| USA | UL | AOTX: Local Alarm Units (UL464, UL609), APAW: Police Station Alarm Units (UL365, UL464) |
| | CSFM | see our website |

## Parts included

| Quantity | Component |
|---|---|
| 1 | D122L Battery Harness |
| 1 | Lit – Installation Manual |

## Ordering information

**D122L Dual Battery Harness with Long Leads**
Color-coded harness with circuit breaker and leads measuring 89 cm (35 in.). Connects 12 V batteries to compatible control panels.
Order number **D122L**

# D161 Dual Modular Telephone Cord

www.boschsecurity.com

28 16 05

BOSCH
Invented for life



- Connects an RJ31X Telco block to an RJ38X Telco jack
- 2.1 m (7 ft.) for longer distances

## Certifications and approvals

| Region | Certification | |
|---|---|---|
| USA | CSFM | see our website |

## Parts included

| Quantity | Component |
|---|---|
| 1 | Telephone cord |

## Technical specifications

| | |
|---|---|
| Length | 2.1 m (7 ft.) |
| Color | Gray |

## Ordering information

**D161 Dual Modular Telephone Cord**
A 2.1 m (7 ft.), 8-conductor fully modular plug-in cord.
Order number **D161**

# D1640-CA Transformer

www.boschsecurity.com

28 16 05

BOSCH
Invented for life




- System transformer rated at 16.5 VAC, 40 VA
- Suitable for use on approved ULC and cUL applications in Canada

For use in Canada. System transformer rated at 16.5 VAC, 40 VA.

## Parts included

| Quantity | Component |
|---|---|
| 1 | Transformer |

## Technical specifications

| | |
|---|---|
| Rating | 16.5 VAC, 40 VA |
| Dimensions | 3.2 in x 2.8 in x 2.2 in<br>(81 mm x 70 mm x 56 mm) |
| Color | White |

## Ordering information

**D1640-CA Transformer**
For use in Canada. System transformer rated at 16.5 VAC, 40 VA.
Order number **D1640-CA**

# D126 Standby Battery (12 V, 7 Ah)

www.boschsecurity.com

28 16 05

BOSCH
Invented for life




- 12 VDC sealed lead-acid
- Fully rechargeable
- Maintenance-free
- For use as secondary power for accessory modules
- Long service life

A maintenance-free, sealed lead-acid, standby and auxiliary power supply that provides long service life and dependability.
The battery is for use only with charging circuits calibrated for lead-acid batteries. It is suitable for supplying backup power for fire, security, and access control systems during AC power failures.
The D126 fits in any of the currently offered enclosures and connects to the two color-coded battery leads supplied with the control panel or module. Use a D122 Dual Battery Harness to connect two D126 batteries in parallel and double the amp hour output.

## Certifications and approvals

| | |
|---|---|
| NYC/BSA | 582-85-SA |
| DSI | CDFM |

| Region | Certification | |
|---|---|---|
| Europe | CE | Council Directive 89/336/EEC Electromagnetic Compatibility |
| USA | UL | ALVY: Access Control Systems Units (UL294), APOU: Proprietary Alarm Units (UL1076), UEHX7: Signaling Appliances, Miscellaneous Certified for Canada (cUL) |

| Region | Certification | |
|---|---|---|
| | FM | |
| | CSFM | 7167-1615: 0100 CONTROL UNIT (HOUSEHOLD) |
| | CSFM | 7165-1615: 0113 FIRE ALARM CONTROL UNIT (COMMERCIAL) |
| | CSFM | 7167-1615:0124 7167 -- CONTROL UNIT (HOUSEHOLD) |
| | CSFM | 7165-1615:0119 7165 -- FIRE ALARM CONTROL UNIT (COMMERCIAL) |
| | CSFM | 7167-1615:0239 7167 -- CONTROL UNIT (HOUSEHOLD) |

## Installation/configuration notes

**Standby Power Requirements**
Refer to the appropriate control panel installation manual for information on calculating the standby battery requirements for the system. Total continuous and intermittent current requirements must not exceed the amp hour capacity of the battery.

## Technical specifications

| | |
|---|---|
| Capacity: | 12 V, 7 Ah |
| Compatible Panels: | Compatible with all control panels |

28 16 05

| | |
|---|---|
| Dimensions: | 15 cm x 8 cm (6 in. x 3 in.) |
| Height with Terminals: | 10 cm (4 in.) |
| Weight: | 2.5 kg (5.5 lb) |

## Ordering information

**D126 Standby Battery (12 V, 7 Ah)**
A rechargeable sealed lead-acid power supply used as a secondary power supply or in auxiliary or ancillary functions.
Order number **D126**

**Represented by:**

**Americas:**
Bosch Security Systems, Inc.
130 Perinton Parkway
Fairport, New York, 14450, USA
Phone: +1 800 289 0096
Fax: +1 585 223 9180
security.sales@us.bosch.com
www.boschsecurity.us

**Europe, Middle East, Africa:**
Bosch Security Systems B.V.
P.O. Box 80002
5617 BA Eindhoven, The Netherlands
Phone: + 31 40 2577 284
Fax: +31 40 2577 330
emea.securitysystems@bosch.com
www.boschsecurity.com

**Asia-Pacific:**
Robert Bosch (SEA) Pte Ltd, Security Systems
11 Bishan Street 21
Singapore 573943
Phone: +65 6571 2808
Fax: +65 6571 2699
apr.securitysystems@bosch.com
www.boschsecurity.asia

**China:**
Bosch (Shanghai) Security Systems Ltd.
201 Building, No. 333 Fuquan Road North IBP
Changning District, Shanghai
200335 China
Phone +86 21 22181111
Fax: +86 21 22182398
www.boschsecurity.com.cn

**America Latina:**
Robert Bosch Ltda Security Systems Division
Via Anhanguera, Km 98
CEP 13065-900
Campinas, Sao Paulo, Brazil
Phone: +55 19 2103 2860
Fax: +55 19 2103 2862
latam.boschsecurity@bosch.com
www.boschsecurity.com

© Bosch Security Systems 2013 | Data subject to change without notice
2548450571 | en, V4, 01. Oct 2013

# D166 Telephone Jack

www.boschsecurity.com

28 16 05

BOSCH
Invented for life



## Ordering information

**D166 Telephone Jack**
Standard Telco RJ31X Telephone Jack measuring approximately 5 cm (2 in.) square by 2.5 cm (1 in.) high.
Order number **D166**

# Professional Series TriTech Curtain Motion Detectors

www.boschsecurity.com

28 16 05

BOSCH
Invented for life

## Curtain type motion detector



- 30 m (100 ft) x 2.6 m (8.5 ft) standard coverage
- 2.1 m to 3 m (7 ft to 10 ft) mounting height, no adjustments required, optional lookdown masking
- Sensor data fusion technology
- Range adaptive radar and active white light suppression
- Dynamic temperature compensation

The Professional Series TriTech Curtain Detectors are exceptionally suited for commercial indoor applications. Sensor data fusion technology ensures that the detector sends alarm conditions based on precise information. The powerful combination of unique features in the Professional Series delivers superior catch performance and virtually eliminates false alarms.
The self-locking two-piece enclosure, built-in bubble level, flexible mounting height, and three optional mounting brackets simplify installation and reduce service time.

## Functions

**Sensor Data Fusion Technology**
Sensor data fusion technology is a unique feature that uses a sophisticated software algorithm to gather signals from five sensors: two pyroelectric sensors, a range adaptive radar sensor, a room temperature sensor, and a white light level sensor. The microcontroller analyzes and compares the sensor data to make the most intelligent alarm decisions in the security industry.

**Range Adaptive Radar**
The microwave transceiver automatically adjusts its detection thresholds based on input from the PIR sensors. Integrating the target distance information from the PIR significantly reduces false alarms from the microwave Doppler radar.

**Active White Light Suppression**
An internal light sensor measures the level of light intensity directed at the face of the detector. Sensor data fusion technology uses this information to eliminate false alarms from bright light sources.

**Dynamic Temperature Compensation**
The detector automatically adjusts PIR sensitivity to identify human intruders at critical temperatures. Dynamic temperature compensation detects human body heat accurately, avoids false alarms, and delivers consistent catch performance at all operating temperatures.

**Cover and Wall Tamper Switch**
When an intruder removes the cover or attempts to separate the detector from the wall, a normally-closed contact opens to alert the control panel.

28 16 05

**Self-adjusting LEDs**
The LED brightness adjusts automatically to the surrounding light level. A blue light-emitting diode (LED) indicates TriTech+ alarms and activates during a walk test. A yellow LED indicates microwave detection, and a red LED indicates PIR detection.

**Remote Walk Test LED**
Users can enter a command through a keypad, a control center, or programming software to remotely enable or disable the walk test LED.

**Alarm Memory**
Alarm memory flashes the alarm LED to indicate stored alarms for use in multiple unit applications. A switched voltage from the control panel controls the alarm memory.

**Solid State Relays**
Solid state relays send silent alarm output signals to provide a higher level of security and reliability. An external magnet does not activate the relay. The solid state relay uses less current than a mechanical relay, providing longer standby capacity during a power loss.

**Draft, Insect, and Small Animal Immunity**
The sealed optic chamber provides immunity to drafts and insects, reducing false alarms. Small animal immunity reduces false alarms caused by animals less than 4.5 kg (10 lb), such as rodents.

**Remote Self Test**
A remote self test initiates when the walk test input switches to its true state. The alarm relay and alarm LED activate for four seconds following a successful test. The trouble relay activates, and the alarm LED flashes following a failed test.

**Input Power Supervision**
When the power is lower than 8 V, a low input power trouble condition activates the trouble relay and causes the LED to flash. The trouble condition clears automatically when power reaches or exceeds 8 V.

**Trouble Memory**
When the walk test input switches to its true state for less than two seconds, the LED flashes to indicate the most recent trouble condition. If there is no trouble in memory, the LED does not flash. After twelve hours, or after the detector receives a second walk test pulse for two seconds or less, the LED stops flashing and the trouble memory clears.

**Cloak and Camouflage Detection Technology**
Cloak and Camouflage Detection Technology ($C^2DT$) maximizes catch performance against intruders attempting to cover their infrared signal.

**DIP Switch Programming**
The following functions are all programmed using DIP switch settings:
- Local Walk Test LED
- Remote Walk Test Input Polarity
- Alarm Memory Polarity
- MANTIS Anti-mask On and Off

## Certifications and approvals

| | | |
|---|---|---|
| Europe | WEEE | Waste Electrical and Electronic Equipment Directive |
| The detectors are designed to also comply with requirements of: | | |
| USA | FCC | Complies with Part 15 |

| Region | Regulatory compliance/quality marks | |
|---|---|---|
| Australia | RCM | [ISC-PDL1-WC30G] |
| USA | UL | [ISC-PDL1-WC30G] |
| Brazil | ANATEL | [ISC-PDL1-WC30G] |

## Installation/configuration notes

### Coverage Patterns

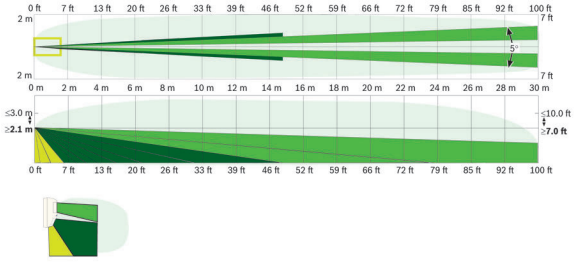




**Standard Curtain Coverage 30 m x 2.6 m (100 ft x 8.6 ft)**

### Mounting
The recommended mounting height is 2 m to 3 m (7 ft to 10 ft) with no adjustments required.
Mount the motion detector level, both horizontally and vertically.
Mounting options:
- On a flat wall (surface, semi-flush), with the optional B335-3 Swiveling low-profile mount, or with the optional B328 Gimbal-mount Bracket
- In a corner (the junction of two perpendicular walls)
- On the ceiling with the optional B338 Universal Ceiling-mount Bracket

### Wiring Considerations
Recommended wire size is 0.2 $mm^2$ to 1 $mm^2$ (26 AWG to 16 AWG).

## Technical specifications

### Electrical

| Power Requirements | |
|---|---|
| Voltage (Operating): | 9 VDC to 15 VDC |
| Current (Maximum): | < 26 mA with alarm, trouble, and LEDs active. |
| Current (Standby): | 18 mA at 12 VDC |
| **Outputs for both Models** | |

28 16 05

| | |
|---|---|
| Tamper: | Normally-closed (NC) contacts (with cover on) rated at 25 VDC, 125 mA maximum. Connect tamper circuit to 24-hour protection circuit. |
| Trouble: | Solid state relay normally-closed (NC) contacts. |
| Alarm: | Solid state relay, normally-closed (NC) contacts, power supervised. 3 W, 125 mA, 25 DC, resistance < 10 Ω. |

## Mechanical

### Enclosure Design

| | |
|---|---|
| Color: | White |
| Dimensions: | 127 mm x 69 mm x 58 mm (5 in. x 2.75 in. x 2.25 in.) |
| Material: | High-impact ABS plastic |

### Indicators

| | |
|---|---|
| Alarm Indicator: | • Blue LED for TriTech+ alarms<br>• Yellow LED for microwave detection<br>• Red LED for PIR detection |

### Zones

| | |
|---|---|
| Zones: | 28 |

## Environmental

| | |
|---|---|
| Relative Humidity: | 0 to 95%, non-condensing |
| Temperature (Operating and Storage): | -30°C to +55°C (-22°F to +130°F) *For UL Certificated installations, 0°C to +49°C (+32°F to +120°F)* |
| Protection Rating (EN 60529, EN 50102): | IP41, IK04 |

## Ordering information

**ISC-PDL1-WC30G Motion detector, 100ft (30m), curtain**
Provides PIR and microwave, 30 m x 3 m (100 ft x 10 ft) coverage.
Order number **ISC-PDL1-WC30G**

**B328 Mounting bracket, gimbal**
Mounts on a single-gang box and allows rotation of a detector. Wires are hidden inside.
Order number **B328**

**B335-3 Mounting bracket, swivel, low profile**
Swiveling, low-profile, universal bracket for wall mounting. The vertical swivel range is +10° to -20°, while the horizontal swivel range is ±25°.
Order number **B335-3**

**B338 Mounting bracket, ceiling, universal**
Swiveling universal bracket for ceiling mounting. The vertical swivel range is +7° to -16°, while the horizontal swivel range is ±45°.
Order number **B338**

**ISC-PDL1-WC30H Motion detector 30m curtain, 10.588GHz**
Provides PIR and microwave, 30 m x 3 m (100 ft x 10 ft) coverage. For use in France and the United Kingdom.
Order number **ISC-PDL1-WC30H**

**B328 Mounting bracket, gimbal**
Mounts on a single-gang box and allows rotation of a detector. Wires are hidden inside.
Order number **B328**

**B335-3 Mounting bracket, swivel, low profile**
Swiveling, low-profile, universal bracket for wall mounting. The vertical swivel range is +10° to -20°, while the horizontal swivel range is ±25°.
Order number **B335-3**

**B338 Mounting bracket, ceiling, universal**
Swiveling universal bracket for ceiling mounting. The vertical swivel range is +7° to -16°, while the horizontal swivel range is ±45°.
Order number **B338**

### Accessories

**B328 Mounting bracket, gimbal**
Mounts on a single-gang box and allows rotation of a detector. Wires are hidden inside.
Order number **B328**

**B335-3 Mounting bracket, swivel, low profile**
Swiveling, low-profile, universal bracket for wall mounting. The vertical swivel range is +10° to -20°, while the horizontal swivel range is ±25°.
Order number **B335-3**

**B338 Mounting bracket, ceiling, universal**
Swiveling universal bracket for ceiling mounting. The vertical swivel range is +7° to -16°, while the horizontal swivel range is ±45°.
Order number **B338**

28 16 05

**Represented by:**

**Europe, Middle East, Africa:**
Bosch Security Systems B.V.
P.O. Box 80002
5600 JB Eindhoven, The Netherlands
Phone: + 31 40 2577 284
emea.securitysystems@bosch.com
emea.boschsecurity.com

**Germany:**
Bosch Sicherheitssysteme GmbH
Robert-Bosch-Ring 5
85630 Grasbrunn
Germany
www.boschsecurity.com

**North America:**
Bosch Security Systems, Inc.
130 Perinton Parkway
Fairport, New York, 14450, USA
Phone: +1 800 289 0096
Fax: +1 585 223 9180
onlinehelp@us.bosch.com
www.boschsecurity.us

**Asia-Pacific:**
Robert Bosch (SEA) Pte Ltd, Security Systems
11 Bishan Street 21
Singapore 573943
Phone: +65 6571 2808
Fax: +65 6571 2699
apr.securitysystems@bosch.com
www.boschsecurity.asia

© Bosch Security Systems 2018 | Data subject to change without notice
2610618763 | en, V44, 11. Jan 2018

# Professional Series TriTech Motion Detectors

www.boschsecurity.com

BOSCH
Invented for life





- 18 m x 25 m (60 ft x 80 ft) coverage, field selectable to 8 m x 10 m (25 ft x 33 ft)
- Sensor data fusion technology
- Tri-focus optics technology
- Range adaptive radar
- Microwave anti-mask

The ISC-PDL1-W18x Professional Series TriTech Detectors are exceptionally suited for commercial indoor applications. Sensor data fusion technology ensures that the detectors send alarm conditions based on precise information. Tri-focus optics eliminate coverage gaps and respond efficiently to intruders. The powerful combination of unique features in the Professional Series delivers superior catch performance and virtually eliminates false alarms.
The self-locking two-piece enclosure, built-in bubble level, flexible mounting height, and three optional mounting brackets simplify installation and reduce service time.

## Functions

**Sensor Data Fusion Technology**
Sensor data fusion technology is a unique feature that uses a sophisticated software algorithm to gather signals from five sensors: two pyroelectric sensors, range adaptive radar, a room temperature sensor, and a white light level sensor. The microcontroller analyzes and compares the sensor data to make the most intelligent alarm decisions in the security industry.

**Tri-focus Optics Technology**
Tri-focus optics technology uses optics with three specific focal lengths: long-range coverage, middle-range coverage, and short-range coverage. The detector applies the three focal lengths to 86 detection zones, which combine to make 11 solid curtains of detection. Tri-focus optics technology also includes two pyroelectric sensors, which deliver twice the standard optical gain. The sensors process multiple signals to deliver precise performance virtually free of false alarms.

**Range Adaptive Radar**
The microwave transceiver automatically adjusts its detection thresholds based on input from the PIR sensors. Integrating the target audience distance information from the PIR significantly reduces false alarms from the microwave Doppler radar.

**Microwave Anti-mask**
The detector sends a supervision-trouble signal if microwave reflective material is placed within 30.5 cm (1 ft) of the detector.

**Supervised Microwave and PIR**
The detector provides single technology coverage if the microwave subsystem fails.

**Active White Light Suppression**
An internal light sensor measures the level of light intensity directed at the face of the detector. Sensor data fusion technology uses this information to eliminate false alarms from bright light sources.

**Field Selectable Coverage (18 m x 25 m or 8 m x 10 m)**
Installers can use a DIP switch to select 18 m x 25 m or 8 m x 10 m (60 ft x 80 ft or 25 ft x 33 ft) coverage.

**Dynamic Temperature Compensation**
The detector automatically adjusts PIR sensitivity to identify human intruders at critical temperatures. Dynamic temperature compensation detects human body heat accurately, avoids false alarms, and delivers consistent catch performance at all operating temperatures.

**Cover and Wall Tamper Switch**
When an intruder removes the cover or attempts to separate the detector from the wall, a normally-closed contact opens to alert the control panel.

**Self-adjusting LED**
The LED brightness adjusts automatically to the surrounding light level. A blue light-emitting diode (LED) indicates dual alarms and activates during a walk test. A yellow LED indicates microwave detection, and a red LED indicates PIR detection.

**Remote Walk Test LED**
Users can type a command through a keypad, a control center, or programming software to remotely enable or disable the walk test LED. Users can locally enable or disable the walk test LED through the DIP switch.

**Alarm Memory**
Alarm memory flashes the alarm LED to indicate stored alarms for use in multiple unit applications. A switched voltage from the control panel controls the alarm memory.

**Solid State Relays**
Solid state relays send silent alarm output signals to provide a higher level of security and reliability. An external magnet does not activate the relay. The solid state relay uses less current than a mechanical relay, providing longer standby capacity during a power loss.

**Draft, Insect, and Small Animal Immunity**
The sealed optic chamber provides immunity to drafts and insects, reducing false alarms. Small animal immunity reduces false alarms caused by animals less than 4.5 kg (10 lb), such as rodents.

**Remote Self Test**
A remote self test initiates when the walk test input switches to its true state. The alarm relay and alarm LED activate for four seconds following a successful test. The trouble relay activates, and the alarm LED flashes following a failed test.

**Input Power Supervision**
When the power is lower than 8 V, a low input power trouble condition activates the trouble relay and causes the LED to flash. The trouble condition clears automatically when power reaches or exceeds 8 V.

**Trouble Memory**
When the walk test input switches to its true state for less than two seconds, LED flashes to indicate the most recent trouble condition. If there is no trouble in memory, the LED does not flash. After twelve hours, or after the detector receives a second walk test pulse for two seconds or less, the LED stops flashing and the trouble memory clears.

**Cloak and Camouflage Detection Technology**
Cloak and Camouflage Detection Technology ($C^2DT$) maximizes catch performance against intruders attempting to cover their infrared signal.

## Certifications and approvals

The detectors are designed to also comply with the requirements of:

Australia C-Tick

| Region | Regulatory compliance/quality marks | |
|---|---|---|
| Australia | SCEC | [ISC-PDL1-W18G, ISC-PDL1-WA18G] |
| USA | UL | [ISC-PDL1-W18G] |
| | UL | UL 639 - Standard for Intrusion Detection Units |
| | FCC | [ISC-PDL1-W18G] |
| Canada | IC | [ISC-PDL1-W18G] |
| China | CCC | 2009031901000559 [ISC-PDL1-W18G-CHI] |
| Brazil | ANATEL | [ISC-PDL1-W18G] |

## Installation/configuration notes

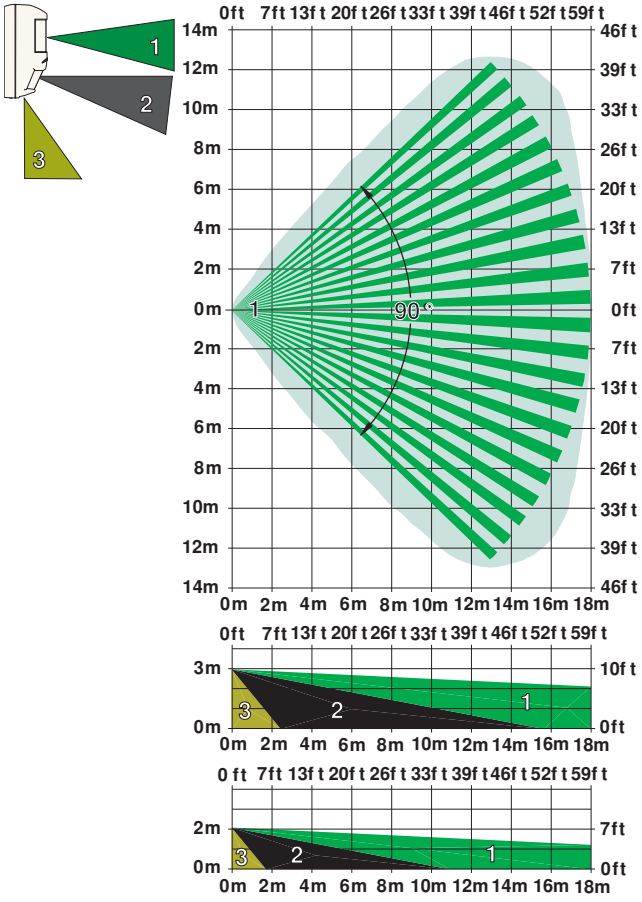


Long-range Coverage 18 m x 25 m (60 ft x 80 ft)

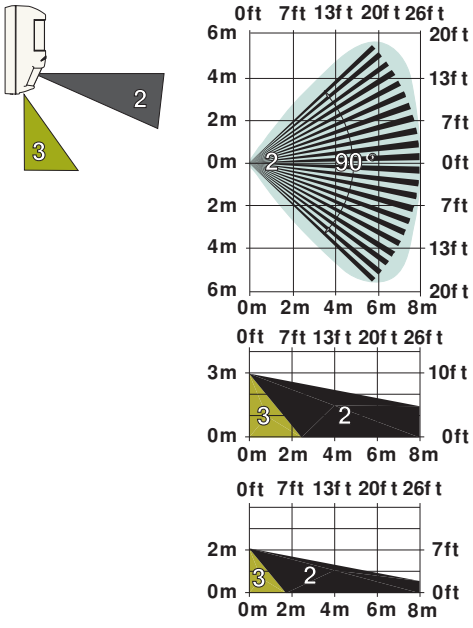


Selectable Short-range Coverage 8 m x 10 m (25 ft x 33 ft)

### Mounting

The recommended mounting height is 2 m to 3 m (7 ft to 10 ft) with no adjustments required.
Mount the motion detector level, both horizontally and vertically.
Mounting options:

- On a flat wall (surface, semi-flush), with the optional B335-3 Swiveling low-profile mount, or with the optional B328 Gimbal-mount Bracket
- In a corner (the junction of two perpendicular walls)
- On the ceiling with the optional B338 Universal Ceiling-mount Bracket

### Wiring Considerations

Recommended wire size is 0.2 $mm^2$ to 1 $mm^2$ (26 AWG to 16 AWG).

## Technical specifications

### Electrical

| | |
|---|---|
| **Power Requirements** | |
| Voltage (Operating): | 9 VDC to 15 VDC |
| Current (Maximum): | < 25 mA |
| Current (Standby): | 13 mA |
| **Outputs** | |
| Relay: | Solid state relay, normally-closed (NC) contacts power supervised. 3 W, 125 mA, 25 VDC, resistance < 10 Ω. |
| Tamper: | Normally-closed (NC) contacts (with cover on) rated at 25 VDC, 125 mA maximum. Connect tamper circuit to 24-hour protection circuit. |
| Trouble: | Solid-state relay normally-closed (NC) contacts. |

### Mechanical

| | |
|---|---|
| **Enclosure Design** | |
| Color: | White |
| Dimensions: | 136 mm x 69 mm x 58 mm (5.25 in. x 2.75 in. x 2.25 in.) |
| Material: | High-impact ABS plastic |
| **Indicators** | |
| Alarm Indicator: | • Blue LED for TriTech alarms<br>• Yellow LED for microwave detection<br>• Red LED for PIR detection |
| **Zones** | |
| Zones: | 86 |

| Frequency Information | |
|---|---|
| Radio Frequency Interference (RFI) immunity: | No alarm or setup on critical frequencies in the range from 26 MHz to 1 GHz at 50 V/m. |

## Environmental

| | |
|---|---|
| Relative Humidity: | 0 to 95%, non-condensing |
| Temperature (Operating and Storage): | -29°C to +55°C (-20°F to +130°F)<br>*For UL Certificated installations, 0°C to +49°C (+32°F to +120°F)* |
| Protection Rating: | IP41, IK04 (EN 60529, EN 50102) |

## Ordering information

**ISC-PDL1-W18G Motion detector, 60ft (18m)**
Provides PIR and microwave, 18 m x 25 m (60 ft x 80 ft) coverage. 10.525 GHz frequency.
Order number **ISC-PDL1-W18G**

**ISC-PDL1-W18H Motion detector, 18m, 10.588GHz**
Provides PIR and microwave, 18 m x 25 m (60 ft x 80 ft) coverage. 10.588 GHz frequency. For use in France and United Kingdom.
Order number **ISC-PDL1-W18H**

### Accessories

**B328 Mounting bracket, gimbal**
Mounts on a single-gang box and allows rotation of a detector. Wires are hidden inside.
Order number **B328**

**B335-3 Mounting bracket, swivel, low profile**
Swiveling, low-profile, universal bracket for wall mounting. The vertical swivel range is +10° to -20°, while the horizontal swivel range is ±25°.
Order number **B335-3**

**B338 Mounting bracket, ceiling, universal**
Swiveling universal bracket for ceiling mounting. The vertical swivel range is +7° to -16°, while the horizontal swivel range is ±45°.
Order number **B338**

**Represented by:**

**Europe, Middle East, Africa:**
Bosch Security Systems B.V.
P.O. Box 80002
5600 JB Eindhoven, The Netherlands
Phone: + 31 40 2577 284
emea.securitysystems@bosch.com
emea.boschsecurity.com

**Germany:**
Bosch Sicherheitssysteme GmbH
Robert-Bosch-Ring 5
85630 Grasbrunn
Germany
www.boschsecurity.com

**North America:**
Bosch Security Systems, Inc.
130 Perinton Parkway
Fairport, New York, 14450, USA
Phone: +1 800 289 0096
Fax: +1 585 223 9180
onlinehelp@us.bosch.com
www.boschsecurity.us

**Asia-Pacific:**
Robert Bosch (SEA) Pte Ltd, Security Systems
11 Bishan Street 21
Singapore 573943
Phone: +65 6571 2808
Fax: +65 6571 2699
apr.securitysystems@bosch.com
www.boschsecurity.asia

© Bosch Security Systems 2018 | Data subject to change without notice
2607960459 | en, V40, 04. Jan 2018

# ISN-CSD70 and ISN-CSD80 Compact Contacts

www.boschsecurity.com

BOSCH
Invented for life



- Closed loop
- Sensitive non-stick rhodium reed
- Bent long leads keep solder off the glass of the reed
- Two solder points on the wire
- Thick plastic shell resists crushing

The contacts are available in brown or white. All models have a rugged, one-piece construction that eliminates the need for extra donut adapters. The compact (stubby) design allows you to use the contact in smaller spaces, without paying for a miniature design. Use on steel doors in standard or tight-fitting applications.

**Notice**
The photograph shows model ISN-CSD80-W.

## Certifications and approvals

UL and

| Region | Certification | |
|---|---|---|
| Europe | CE | 73/23/EEC and 93/68/EEC, EN50131: 1997, EN50131-6: 1997, EN60950: 2000, EN60335-1: 1994 +A1: 1996 Annex B |
| USA | UL | cULus: AMQV: Connectors and Switches (UL 634), AMQV7: Connectors and Switches Certified for Canada (ULC/ ORD-C634) [-CSD70 Series] |
| | UL | cULus: AMQV: Connectors and Switches (UL 634), AMQV7: Connectors and Switches Certified for Canada (ULC/ ORD-C634) [-CSD80 Series] |

## Installation/configuration notes

**Compatibility Information**
All contact models are compatible with control panel models that accept contact inputs.

## Parts included

| Quantity Per Package | Component |
|---|---|
| 10 | Contacts |
| 10 | Magnets |

## Technical specifications

### Specifications for All Models

| | |
|---|---|
| Gap Width: | 38 mm (1.5 in.) |
| Wire Lead Type: | 0.8 mm (0.029 in.) 22 AWG, 7 stranded |
| Wire Lead Length: | 46 cm (18 in.) standard leads |
| Switch Configuration Type: | Single pole single throw (SPST) |
| Operating Temperature Range: | 7.2°C to -95.56°C (-45°F to -140°F) |

### Specifications for ISN-CSD70-B/W Models

| | |
|---|---|
| Contact Dimensions: | 19 mm x 20.3 mm (0.75 in. x 0.80 in.) |
| Maximum Contact Resistance: | 150 µΩ (micro-ohm) |
| Minimum Breakdown Voltage: | 250 VDC |
| Insulation Resistance: | $10^{10}$ Ω |
| Electrostatic Cap: | 0.3 PF |
| Contact Capacity: | 10 VAC |
| Maximum Conductive Current: | 1.0 A |
| Maximum Voltage: | 100 V |

### Specifications for ISN-CSD80-B/W Models

| | |
|---|---|
| Contact Dimensions: | 25 mm x 20 mm (1 in. x 0.80 in.) |
| Maximum Contact Resistance: | 150 µΩ (micro-ohm) |
| Minimum Breakdown Voltage: | 250 VDC |
| Insulation Resistance: | $10^{10}$ Ω |
| Electrostatic Cap: | 0.3 PF |
| Contact Capacity: | 10 VAC |
| Maximum Conductive Current: | 1.0 A |
| Maximum Voltage: | 100 V |

### Package Information

ATTENTION! Each package contains ten contacts and ten magnets.

## Ordering information

**Brown Compact Contact with Standard Magnet (19 mm)**
Brown recessed contact with 19 mm (0.75 in.) diameter. Includes a standard magnet. **Package contains ten contacts and ten magnets.**
Order number **ISN-CSD70-B**

**White Compact Contact with Standard Magnet (19 mm)**
White recessed contact with 19 mm (0.75 in.) diameter. Includes a standard magnet. **Package contains ten contacts and ten magnets.**
Order number **ISN-CSD70-W**

**White Compact Contact with Standard Magnet (25 mm)**
White recessed contact with 25 mm (1 in.) diameter. Includes standard magnet. **Package contains ten contacts and ten magnets.**
Order number **ISN-CSD80-W**

**Represented by:**

**Americas:**
Bosch Security Systems, Inc.
130 Perinton Parkway
Fairport, New York, 14450, USA
Phone: +1 800 289 0096
Fax: +1 585 223 9180
security.sales@us.bosch.com
www.boschsecurity.us

**Europe, Middle East, Africa:**
Bosch Security Systems B.V.
P.O. Box 80002
5617 BA Eindhoven, The Netherlands
Phone: + 31 40 2577 284
Fax: +31 40 2577 330
emea.securitysystems@bosch.com
www.boschsecurity.com

**Asia-Pacific:**
Robert Bosch (SEA) Pte Ltd, Security Systems
11 Bishan Street 21
Singapore 573943
Phone: +65 6571 2808
Fax: +65 6571 2699
apr.securitysystems@bosch.com
www.boschsecurity.asia

**China:**
Bosch (Shanghai) Security Systems Ltd.
201 Building, No. 333 Fuquan Road North IBP
Changning District, Shanghai
200335 China
Phone +86 21 22181111
Fax: +86 21 22182398
www.boschsecurity.com.cn

**America Latina:**
Robert Bosch Ltda Security Systems Division
Via Anhanguera, Km 98
CEP 13065-900
Campinas, Sao Paulo, Brazil
Phone: +55 19 2103 2860
Fax: +55 19 2103 2862
latam.boschsecurity@bosch.com
www.boschsecurity.com

© Bosch Security Systems 2013 | Data subject to change without notice
2646726155 | en, V1, 01. Oct 2013

# B520 Auxiliary Power Supply Module

www.boschsecurity.com

BOSCH
Invented for life

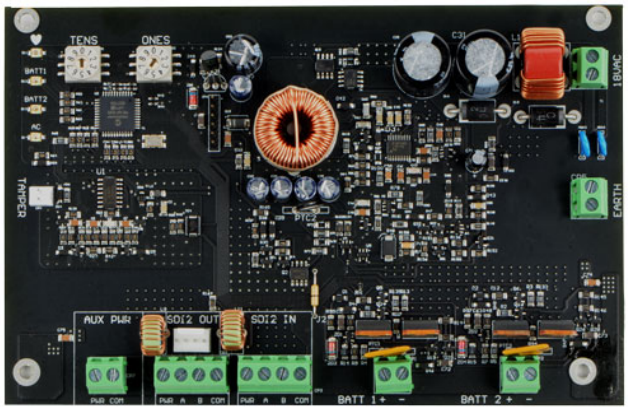


- Provides up to 2A of 12V standby current for Fire or Burglar Applications (4A of Burglary alarm current)
- Supervises up to two 12v 7-18Ah batteries independently for up to 36AH of capacity
- Provides up to 80 hours of standby time
- Uses the Bosch standard TR1850 plug-in transformer
- Easy to read rotary switch addressing

The B520 Auxiliary Power Supply Module is a fully supervised, addressable SDI2 bus device that provides an integrated auxiliary power supply solution for Bosch control panels.

## System overview

The B520 Auxiliary Power Supply Module is an auxiliary power supply expansion device that connects to compatible control panels through the SDI2 bus. This module is supervised and communicates back to the control panel all status changes.
Industrial, commercial, and institutional facilities are typical installations for the B520 module. The B520 rotary switches allow for ease of use in device addressing. The SDI2 Out terminals provide auxiliary power for SDI2 expansion devices such as keypads. The AUX PWR terminals provides added auxiliary power capabilities for additional devices such as PIR's.

## Functions

**Supervision Monitoring**
The module monitors and communicates status information over the SDI2 bus for the following:

- Operation (Heartbeat)
- Battery 1 (BATT 1)
- Battery 2 (BATT 2)
- AC input power (AC)
- Battery OK
- Low Battery
- Missing Battery

**Indicators**

- Heartbeat [icon]: Blue LED flashing On and Off when system is operating normally. A steady On or Off LED indicates a system error. Triple flash indicates communication failure.
- BATT 1 LED: Green steady On LED indicates the battery status of BATT 1 is operating normally. Flashing indicates low battery. Triple flash indicates battery charger failure. Off LED indicates a missing battery.
- BATT 2 LED: Green steady On LED indicates the battery status of BATT 2 is operating normally. Flashing indicates low battery. Triple flash indicates battery charger failure. Off LED indicates a missing battery.
- AC LED: Green steady On LED indicates the AC power is operational. A pulsating LED (3 pulses per sec.) occurs when a battery test is being performed. Flashing indicates low or failed AC.

**Battery Charging**
Fully charged batteries, connected to the battery terminals, sustain power to the B520 in the event that the AC power fails.

If AC power fails (is absent, or low) on the B520, the B520 automatically switches from primary power (AC) to secondary power (battery). When AC power is present, the B520 performs periodic battery tests to ensure battery life and usability.

## Certifications and approvals

| Region | |
|---|---|
| US | UL 365 – Police Station Connected Burglar Alarm Units and Systems |
| | UL 609 – Local Burglar Alarm Units and Systems |
| | UL 636 – Holdup Alarm Units and Systems |
| | UL 864 – Control Units and Accessories for Fire Alarm Systems |
| | UL 985 – Household Fire Warning System Units |
| | UL 1023 – Household Burglar Alarm System Units |
| | UL 1076 – Proprietary Burglar Alarm Units and Systems |
| | UL 1610 – Central Station Burglar Alarm Units |
| | FCC Part 15 Class B |
| Canada | CAN/ULC S303 – Local Burglar Alarm Units and Systems |
| | CAN/ULC S304 – Signal Receiving Centre and Premise Alarm Control Units |
| | ULC-ORD C1023 – Household Burglar Alarm System Units |
| | ULC-ORD C1076 – Propriety Burglar Alarm Units and Systems |
| | ICES-003 – Digital Apparatus |

| Region | Certification | |
|---|---|---|
| USA | UL | 20121010-S5579 |
| | CSFM | see our website |

## Installation/configuration notes

### Mounting Considerations

You can mount the B520 Auxiliary Power Supply Module in a variety of enclosures for optimal situations.
Mounting in the D8103 requires the addition on the B12 Mounting plate.
The D8103 enclosure supports up to two 12V, 18Ah batteries. The B10 supports either one 12V, 18Ah or up to two 12V, 7Ah batteries.

### Wiring Considerations

The B520 connects to a control panel using the SDI2 IN connections (PWR, A, B, COM). Use 12 AWG to 22 AWG (1.5 mm to 0.6 mm) wires from the power supply to the control panel.
The B520 provides auxiliary power to expansion modules via the SDI2 OUT (PWR, A, B, COM), or AUX Power (AUX PWR) connections using the screw terminal strip, or by using the interconnect wiring connection. Use 12 AWG to 22 AWG (1.5 mm to 0.6 mm) wires from the module to the SDI2 expansion module(s).

## Parts included

| Quantity | Component |
|---|---|
| 1 | B520 Auxiliary Power Supply module |
| 1 | Hardware pack |
| 1 | Literature pack |

### B520 Kit, B10 Enclosure

Kit contents include:
- B520 Aux Power Supply
- TR1850 transformer
- B10 white enclosure

Order number: **B520-B**

### B520 Kit, D8103 Enclosure

Kit contents include:
- B520 Aux Power Supply
- TR1850 transformer
- B12 mounting plate
- D8103 gray, steel enclosure

Order number: **B520-C**

## Technical specifications

### Properties

| | |
|---|---|
| Board Dimensions | 11.43 cm x 17.62 cm x 2.9 cm (4.5 in x 6.94 in x 1.15 in) |
| Maximum Distance – Wire Size | 305 m (1000 ft) - 0.65 mm (22 AWG)<br>305 m (1000 ft) – 2 mm (18 AWG)<br>Unshielded wire only |
| Compatibility | GV4 Series control panels (Up to 8 B520 Auxiliary Power Supply Modules per control panel)<br>D8103 Enclosure<br>B10 Large Control Panel Enclosure<br>B12 Mounting Plate for the D8103 Enclosure<br>D8108A Attack Enclosure<br>D2203 Enclosure<br>BATB-40 Enclosure<br>AE1, AE2 Enclosures<br>D8004 Transformer Enclosure* |
| B501-10 | Interconnect cables (10 per pack) |

*The D8004 Transformer Enclosure is required when the B520 and TR1850 (18 VAC, 50 VA) Transformer are used in UL 864 Fire, or Combination Burg and Fire applications.

### Power Input

| | |
|---|---|
| Transformer Power Supply | TR1850 (18 VAC, 50 VA)<br>TR1850-CA (18 VAC, 50 VA) for Canada |

### Power Output

| | |
|---|---|
| Current Available (Maximum) | 2.0 A SDI2 Out and AUX Power (Combined) (up to 4.0 A of alarm current for Burglar Applications) |
| Current Reserved for Charging Batteries | 150 mA |
| Current Drawn from the Panel | 15 mA |
| Voltage (rated range) | 11.5 to 12.2 VDC (special application) |
| Battery Configuration | Supports two*, separate 12 V sealed lead acid batteries (7-18 Ah) for up to 36 amp.<br><br>*Battery 1 is required for normal operations. Battery 2 is optional. |

### Enclosure Battery Considerations

| | |
|---|---|
| D8103 | Holds up to two 18 Ah, or two 7 Ah batteries |
| B10 | Holds up to one 18 Ah, or two 7 Ah batteries |

### Environmental Considerations

| | |
|---|---|
| Operating Temperature | +32° to +120° F (0° to +49°C) |
| Storage Temperature | -4° to 140° F (-20° to +60° C) |
| Relative Humidity | 5% to 93% at +32° (+90°F) non-condensing |
| Use | Intended for indoor use. |

## Ordering information

**B520 Auxiliary Power Supply Module**
Provides auxiliary power to 12VDC devices or to SDI2 modules.
Order number **B520**

**Accessories**

**B10 Medium Control Panel Enclosure**
White, steel enclosure. Accepts an optional lock and tamper switch. Measures 35.6 cm x 31.8 cm x 7.6 cm (14 in x 12.5 in x 3 in).
Order number **B10**

**D2203 Enclosure**
Gray steel enclosure. Accepts an optional lock and tamper switch. Measures 35.6 cm x 31.8 cm x 7.6 cm (14 in x 12.5 in x 3 in).
Order number **D2203**

**D8103 Enclosure**
Grey steel enclosure measuring 41 cm x 41 cm x 9 cm (16 in. x 16 in. x 3.5 in.).
Order number **D8103**

**D8108A Attack Resistant Enclosure**
Grey steel enclosure measuring 41 cm x 41 cm x 9 cm (16 in. x 16 in. x 3.5 in.). UL Listed. Includes lock and key set. B520, B4512, and B5512 require the B12 mounting plate.
Order number **D8108A**

**AE1 Standard Enclosure (Gray)**
Standard gray enclosure with keyed lock. Measures 35.6 cm x 31.8 cm x 7.6 cm (14 in x 12.5 in x 3 in).
Order number **AE1**

**AE2 Standard Enclosure (Red)**
Standard red enclosure with keyed lock. Measures 35.6 cm x 31.8 cm x 7.6 cm (14 in. x 12.5 in. x 3 in.).
Order number **AE2**

**D8004 Transformer Enclosure**
For applications such as fire alarm that might require a transformer enclosure.
Order number **D8004**

**B12 Mounting Plate for D8103 Enclosure**
Required for mounting select control panels and other devices in D8103, D8108A, D8109, or BATB Battery Box enclosures.
Order number **B12**

**TR1850 Transformer**
For use in North America. Plug-in transformer with input: 120 VAC, 60 Hz, 0.50 A; output 18 VAC, 50 VA output.
Order number **TR1850**

**D101 Lock and Key Set**
Short-body lock set with one key supplied. Uses the D102 (#1358) replacement key.
Order number **D101**

**ICP-EZTS Dual Tamper Switch**
Combination tamper switch with a wire loop for additional tamper outputs.
Order number **ICP-EZTS**

**BATB-40 Battery Box\Enclosure**
The BATB-40 Battery Box holds two dry or wet cell batteries. The box can be used with fire alarm systems or intrusion systems.
Order number **BATB-40**

**B520 Kit, B10 Enclosure**
B520 Auxiliary Power Supply kit. Includes a TR1850 transformer and a B10 White, steel enclosure.
Order number **B520-B**

**B520 Kit, D8103 Enclosure**
B520 Auxiliary Power Supply kit. Includes a TR1850 transformer, a B12 mounting plate, and a D8103 Gray, steel enclosure.
Order number **B520-C**

**Represented by:**

**Americas:**
Bosch Security Systems, Inc.
130 Perinton Parkway
Fairport, New York, 14450, USA
Phone: +1 800 289 0096
Fax: +1 585 223 9180
security.sales@us.bosch.com
www.boschsecurity.us

**Europe, Middle East, Africa:**
Bosch Security Systems B.V.
P.O. Box 80002
5617 BA Eindhoven, The Netherlands
Phone: + 31 40 2577 284
Fax: +31 40 2577 330
emea.securitysystems@bosch.com
www.boschsecurity.com

**Asia-Pacific:**
Robert Bosch (SEA) Pte Ltd, Security Systems
11 Bishan Street 21
Singapore 573943
Phone: +65 6571 2808
Fax: +65 6571 2699
apr.securitysystems@bosch.com
www.boschsecurity.asia

**China:**
Bosch (Shanghai) Security Systems Ltd.
201 Building, No. 333 Fuquan Road North IBP
Changning District, Shanghai
200335 China
Phone +86 21 22181111
Fax: +86 21 22182398
www.boschsecurity.com.cn

**America Latina:**
Robert Bosch Ltda Security Systems Division
Via Anhanguera, Km 98
CEP 13065-900
Campinas, Sao Paulo, Brazil
Phone: +55 19 2103 2860
Fax: +55 19 2103 2862
latam.boschsecurity@bosch.com
www.boschsecurity.com

© Bosch Security Systems 2014 | Data subject to change without notice
2536892171 | en, V6, 04. Nov 2014

DSC

A Tyco International Company

# PowerSeries v4.6
## Control Panels

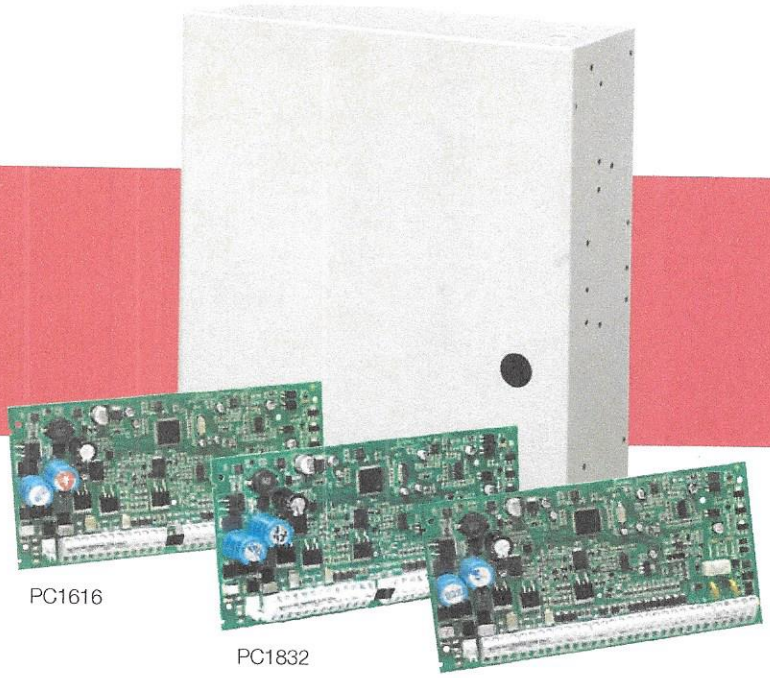


## Features That Make a Difference:

- Convenience of easy wireless device enrollment process
- Additional wireless zones – up to 64 in total
- Library of over 250 pre-configured labels
- Compatible with C24 Interactive

## Standard PowerSeries Features:

- Template Programming
- Account Code Error Checking
- Alternate Communications via GPRS and IP
- Local and Remote Downloading
- Programmable Daylight Savings Time
- Automatic CID
- 2-way Audio
- 1 Time Use Code
- Keypad Lockout

### PowerSeries v4.6 Control Panels: Simply Powerful

Introducing the new PowerSeries v4.6 Control Panel from DSC. This feature-rich and reliable intrusion alarm control panel easily integrates with an array of compatible components to deliver a scalable solution. PowerSeries v4.6 makes installation easy, simple and fast without compromising flexibility of design.

### Even More Available Wireless Zones

To accommodate the move to more and more wireless devices and detectors, the PowerSeries PC 1864 has 64 wireless zones – double the capacity of earlier versions. This provides the scalability and flexibility a control panel needs to support requirements both now and in the future.

### Label Programming Made Easy with Pre-loaded Library

With a library of over 250 commonly-used names in English, French and Spanish, label programming is now a snap with the PowerSeries v4.6. Installers can now assign a unique 3-digit code to display a full descriptive label (e.g., code 190 displays 'Window'), avoiding time and mistakes with more conventional keypad entry. For additional customization, other pertinent details can also be added, such as the zone or floor to make it easy for the owner to identify faults (e.g., 'Bedroom Window').

### Convenient Wireless Device Enrollment Reduces Installation Time

Enrolling wireless devices and detectors is quick and easy with the PowerSeries v4.6 – reducing onsite installation time. With the wireless device enrollment process, installers are not required to manually program serial numbers or wireless attributes. Instead, enrollment is completed by confirming the confirm Electronic Serial Numbers (ESN), zone numbers and zone type through a series of user friendly screens.

STANTEC PROJECT #: 110126045
SUBMITTAL # ELE-08R2
This review by Stantec is for general conformance with the design concept of Stantec's design of the:
☐ Architectural ☐ Structural ☐ Mechanical ☑ Electrical ☐ Other
component(s) only and does not mean that Stantec has verified or approves the shop drawing(s). The Contractor remains solely responsible for the shop drawing(s) and this review by Stantec does not relieve the Contractor of the Contractor's responsibility for errors or omissions in the shop drawing(s) or for meeting all requirements of the contract documents. This review does not mean that Stantec approves the detailed design inherent in the shop drawing, responsibility for which shall remain with the Contractor submitting same, nor does this review mean that Stantec accepts any deviation of the shop drawing(s) from the contract documents. The Contractor is responsible for confirming all dimensions and correlating them at the job site, for all construction means, methods and techniques, and for coordination of construction work of all trades, including coordination of all shop drawings.
Stantec
☑ REVIEWED
☐ REVIEWED, AS NOTED
☐ REVISE AND RESUBMIT
☐ NOT REVIEWED
DATE 2019-11-08
BY Konrad Goluch



Contact your DSC distributor.
www.dsc.com | 1-888-888-7838

DSC

A Tyco International Company

## Compatible with C24 Interactive

The PowerSeries v4.6 Control Panel is compatible with the innovative C24 Interactive product line. Integrating these two lines provides accountability and control to end users with a scalable solution. C24 Interactive offers a range of pre-defined security options from simple notification to automated 'control and connect'. Ideal for both new and existing end users, C24 Interactive options can be easily added as requirements evolve, creating long-term and entrenched revenue streams today and tomorrow – all supported by PowerSeries v4.6.

## Simply Powerful

Put the PowerSeries v4.6 Control Panel to work at the centre of any security installation from small residential to medium-sized commercial installations. Designed with users in mind, installers now have an easy-to-install system with a range of features all backed by DSC's proven reputation. Simply powerful.

## Compatibility

- User Interfaces - LED, Icon and Full Message LCD, NEW PTK Touchscreen
- C24 Interactive
- Wireless Receivers, Devices and Detectors
- Audio Alarm Verification
- Telephone Interface/Automation Control
- High & Low Current Output Expansion
- Alternate Communication Options
- Hardwired Expansion and Detectors
- Addressable Expansion and Detectors
- Windows™ Software for PC Downloading
- Access Control Integration

## Specifications

| | |
|---|---|
| Power Supply | 16.5 VAC/40 VA @ 50/60 Hz |
| Current Draw (Panel) | 110 mA (Nominal) |
| Auxiliary & Output | 13.75 ± 5% Vdc /700 mA |
| Bell Output | 13.75 ± 5% Vdc /700 mA |
| Operating Environment | 32° to 120° F (0° to 49° C) |
| Relative Humidity | 93% |

## PowerSeries v4.6 Features

| Features | PC1616 | PC1832 | PC1864 |
|---|---|---|---|
| On-Board Zones | 6 | 8 | 8 |
| Hardwired Zones | 16 (1 x PC5108) | 32 (1 x PC5108) | 64 (1 x PC5108) |
| Wireless Zones | 32 | 32 | 64 |
| Keypad Zone Support | Yes | Yes | Yes |
| On-board PGM Outputs | PGM 1 = 50 mA<br>PGM 2 = 300 mA | PGM 1 = 50 mA<br>PGM 2 = 300 mA | PGM 1,3,4 = 50 mA<br>PGM 2 = 300 mA |
| PGM Expansion | 8 x 50 mA (PC5208)<br>4 x 500 mA (PC5204) | 8 x 50 mA (PC5208)<br>4 x 500 mA (PC5204) | 8 x 50 mA (PC5208)<br>4 x 500 mA (PC5204) |
| Keypads | 8 | 8 | 8 |
| Partitions | 2 | 4 | 8 |
| User Codes | 47+ Master Codes | 71+ Master Codes | 94+ Master Codes |
| Event Buffer | 500 Events | 500 Events | 500 Events |
| Battery Required | 4 Ah / 7 Ah / 14 AHr | 4 Ah / 7 Ah / 14 AHr | 4 Ah / 7 Ah / 14 AHr |
| Bell Output | 12 V / 700 mA (cont) | 12 V / 700 mA (cont) | 12 V / 700 mA (cont) |

PN 30001422



For product information
www.dsc.com
Product specifications and availability subject to change without notice. Certain product names mentioned herein may be trade names and/or registered trademarks of other companies.
©2012 2012-06

# PC1616/PC1832/PC1864 UL/ULC Wiring Diagram

**APPLICABLE UL STANDARDS**
**UL FILE NO. S4019**
UL1610 Central-Station Burglar Alarm Units
UL609 Local Burglar Alarm Units and Systems
UL365 Police Station Connected Burglar Alarm Units & Systems
UL985 Household Fire Warning System Units
UL1023 Household Burglar Alarm System Units
UL1635 Digital Alarm Communicator System Units
UL1637 Home Health Care Signaling Equipment
ANSI/SIA CP-01-2000

SIA-FAR Min System Requirements:
1 PC1616/1832/1864 Panel
1 Local annunciation device

Local annunciation devices may be any combination of the keypads: PKP-LCD, PKP-ICN, PK5500, PK5501, PK5508, PK5516

**WARNING**
Incorrect connections may result in PTC failure or improper operation. Inspect wiring and ensure connections are correct before applying power. Do not route any wiring over circuit boards. Maintain at least 25.4mm (1") separation.

**WARNING**
High voltage. Disconnect AC power and telephone lines prior to servicing.

All circuits are classified for UL installations as power limited/ClassII power limited, except for the battery leads which are not power limited. Do not route any wiring over circuit boards. Maintain at least 1" (25.4mm) separation. Please see Section 2. A minimum 1/4" (6.4mm) separation must be maintained at all points between power limited wiring and all other non-power limited wiring.

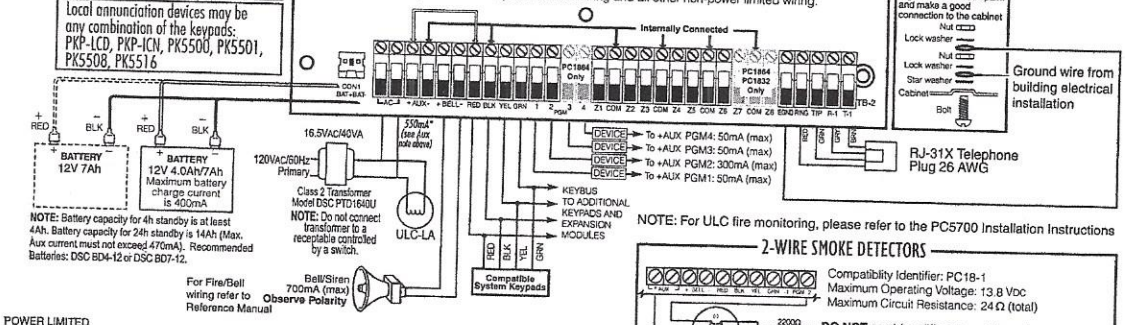


NOTE: Battery capacity for 4h standby is at least 4Ah. Battery capacity for 24h standby is 14Ah (Max. Aux current must not exceed 470mA). Recommended Batteries: DSC BD4-12 or DSC BD7-12.

***AUX Wiring**
Use No.14-22 AWG conductor. AUX+ and Keybus (RED) are internally connected. Total current draw from keypads, PGM Outputs and AUX circuits must not exceed 700mA.




RJ-31X Telephone Plug 26 AWG

NOTE: For ULC fire monitoring, please refer to the PC5700 Installation Instructions

POWER LIMITED

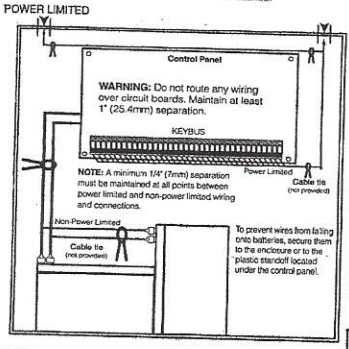


## PGM CONNECTIONS

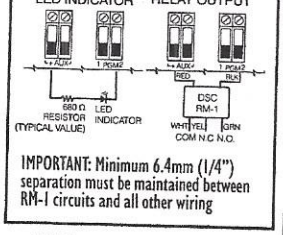


IMPORTANT: Minimum 6.4mm (1/4") separation must be maintained between RM-1 circuits and all other wiring

## 2-WIRE SMOKE DETECTORS




Compatibility Identifier: PC18-1
Maximum Operating Voltage: 13.8 Vdc
Maximum Circuit Resistance: 24 Ω (total)

**DO NOT** combine different models on the same circuit as operation may be impaired.

| NAME | MODEL | COMPATIBILITY ID | MAX # | BASE |
|---|---|---|---|---|
| DSC | FSA-210B Series | FS200 | SEE NOTE | NONE |

**NOTE:** Refer to the FSA-210 Installation Manual for more details.

## 4-WIRE SMOKE DETECTORS

Smoke detector must be latching type (ex. DSC FSA-410B Series)
To reset smoke detector, enter [*][7][2]

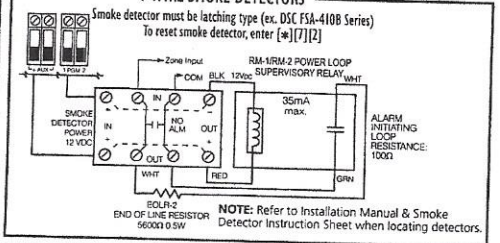


**NOTE:** Refer to Installation Manual & Smoke Detector Instruction Sheet when locating detectors.

## TYPICAL ZONE CIRCUITS

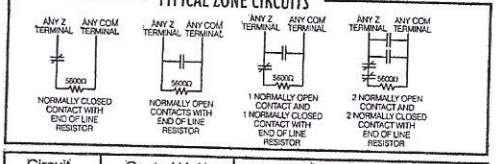


## AUX INPUT WIRING

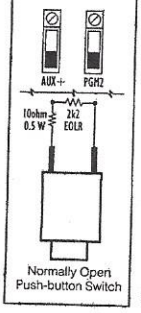


## RESISTOR IDENTIFICATIONS

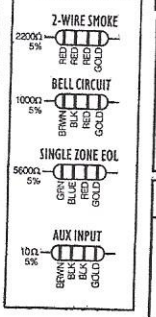


| Circuit (zone) | Control Unit Delay - Sec. | Smoke Detector | |
|---|---|---|---|
| | | Model | Delay - Sec. (a) |
| | | | |

**WARNING:** Not to be removed by anyone except occupant. This equipment should be installed in accordance with the National Fire Code ANSI/NFPA 72 (National Fire Protection Association, Batterymarch Park, Quincy MA, 02269). Printed information describing proper installation, operation, testing, maintenance, evacuation planning, and repair service is to be provided with this equipment. For compliance with UL-985, at least one hardwired smoke detector is required.

This device complies with Parts 15 and 68 of the FCC rules. Operation is subject to the following 2 conditions: [1] this device may not cause harmful interference and [2] this device must accept any interference received, including interference that may cause undesired operation.
Model: PC1864 FCC Reg. No. F53AL01BPC1864
Model: PC1832 FCC Reg. No. F53AL01BPC1832
Model: PC1616 FCC Reg. No. F53AL01BPC1614
REN = 0.1B Plug Type: RJ-31X

MADE IN MEXICO

**ULC NOTES**
- For ULC Listed Fire Monitoring Installations & module requirements, please refer to the ULC Installation Information Sheet, part #29002157.
- Use a CSA/cUL transformer, hardwired.
- All tamper circuits may be connected to the same zone.
- Use ULC-LA for AC Power indication.

(a) The delay (power-up) time marked on the installation wiring diagram of the smoke detector or on the installed smoke detector(s) is to be used. Control panel is suitable for the following UL installations:

| Installation Type | Signaling Means |
|---|---|
| Local Mercantile | DACT, PSDN (OT) |
| Central Station (Burglary) | PSDN Standard Line Security |
| Police Station Connected (Burglary) | PSDN Encrypted Line Security |

**Temperature Range: 0°C-49°C [32°F-120°F] / Maximum Humidity: 85% R.H.**
For detailed installation and operating instructions, refer to the Installation Guide #29007916, and the User Manual #29007864. The PC1616/PC1832/PC1864 is UL Listed for limited energy installations per NEC Article 760. Recognized limited energy cable should be used. Observe NEC wiring requirements and local codes defined by the authority having jurisdiction. Security detection devices that require power from the control panel must be UL Listed for the intended application and operate over the range of 11.6-12.6VDC (residential), 12.0VDC (commercial). The DSC Bravo Series are recommended UL Listed motion detectors. Compatible system keypads: PC5508Z, KP5508Z, PC5516Z, KP5516Z, PC5532Z, KP5532Z, LCD5500Z, KP5500Z, LCD5501, LED5501, PKP-LCD, PKP-ICN, PK5500, PK5501, PK5508, PK5516, RFK5500-433, RFK5501-433, RFK5508-433, RFK5516-433.

# Professional Series TriTech Curtain Motion Detectors

www.boschsecurity.com

BOSCH
Invented for life

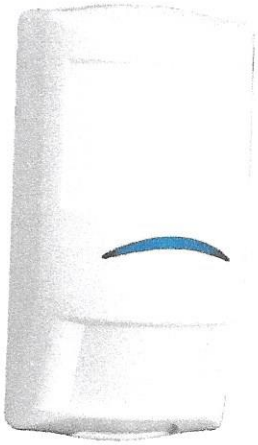

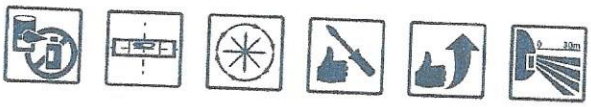

- 30 m (100 ft) x 2.6 m (8.5 ft) standard coverage
- 2.1 m to 3 m (7 ft to 10 ft) mounting height, no adjustments required, optional lookdown masking
- Sensor data fusion technology
- Range adaptive radar and active white light suppression
- Dynamic temperature compensation

The Professional Series TriTech Curtain Detectors are exceptionally suited for commercial indoor applications. Sensor data fusion technology ensures that the detector sends alarm conditions based on precise information. The powerful combination of unique features in the Professional Series delivers superior catch performance and virtually eliminates false alarms.
The self-locking two-piece enclosure, built-in bubble level, flexible mounting height, and three optional mounting brackets simplify installation and reduce service time.

## Functions

**Sensor Data Fusion Technology**
Sensor data fusion technology is a unique feature that uses a sophisticated software algorithm to gather signals from five sensors: two pyroelectric sensors, a range adaptive radar sensor, a room temperature sensor, and a white light level sensor. The microcontroller analyzes and compares the sensor data to make the most intelligent alarm decisions in the security industry.

**Range Adaptive Radar**
The microwave transceiver automatically adjusts its detection thresholds based on input from the PIR sensors. Integrating the target distance information from the PIR significantly reduces false alarms from the microwave Doppler radar.

**Active White Light Suppression**
An internal light sensor measures the level of light intensity directed at the face of the detector. Sensor data fusion technology uses this information to eliminate false alarms from bright light sources.

**Dynamic Temperature Compensation**
The detector automatically adjusts PIR sensitivity to identify human intruders at critical temperatures. Dynamic temperature compensation detects human body heat accurately, avoids false alarms, and delivers consistent catch performance at all operating temperatures.

**Cover and Wall Tamper Switch**
When an intruder removes the cover or attempts to separate the detector from the wall, a normally-closed contact opens to alert the control panel.

**Self-adjusting LEDs**
The LED brightness adjusts automatically to the surrounding light level. A blue light-emitting diode (LED) indicates TriTech+ alarms and activates during a walk test. A yellow LED indicates microwave detection, and a red LED indicates PIR detection.

**Remote Walk Test LED**
Users can enter a command through a keypad, a control center, or programming software to remotely enable or disable the walk test LED.

**Alarm Memory**
Alarm memory flashes the alarm LED to indicate stored alarms for use in multiple unit applications. A switched voltage from the control panel controls the alarm memory.

**Solid State Relays**
Solid state relays send silent alarm output signals to provide a higher level of security and reliability. An external magnet does not activate the relay. The solid state relay uses less current than a mechanical relay, providing longer standby capacity during a power loss.

**Draft, Insect, and Small Animal Immunity**
The sealed optic chamber provides immunity to drafts and insects, reducing false alarms. Small animal immunity reduces false alarms caused by animals less than 4.5 kg (10 lb), such as rodents.

**Remote Self Test**
A remote self test initiates when the walk test input switches to its true state. The alarm relay and alarm LED activate for four seconds following a successful test. The trouble relay activates, and the alarm LED flashes following a failed test.

**Input Power Supervision**
When the power is lower than 8 V, a low input power trouble condition activates the trouble relay and causes the LED to flash. The trouble condition clears automatically when power reaches or exceeds 8 V.

**Trouble Memory**
When the walk test input switches to its true state for less than two seconds, the LED flashes to indicate the most recent trouble condition. If there is no trouble in memory, the LED does not flash. After twelve hours, or after the detector receives a second walk test pulse for two seconds or less, the LED stops flashing and the trouble memory clears.

**Cloak and Camouflage Detection Technology**
Cloak and Camouflage Detection Technology ($C^2DT$) maximizes catch performance against intruders attempting to cover their infrared signal.

**DIP Switch Programming**
The following functions are all programmed using DIP switch settings:

- Local Walk Test LED
- Remote Walk Test Input Polarity
- Alarm Memory Polarity
- MANTIS Anti-mask On and Off

## Certifications and approvals

| | | |
|---|---|---|
| Europe | WEEE | Waste Electrical and Electronic Equipment Directive |

The detectors are designed to also comply with requirements of:

| | | |
|---|---|---|
| USA | FCC | Complies with Part 15 |

| Region | Regulatory compliance/quality marks | |
|---|---|---|
| Australia | RCM | [ISC-PDL1-WC30G] |
| USA | UL | [ISC-PDL1-WC30G] |
| | UL | 20190115; UL639 – Standard for Intrusion-Detection Units |

## Installation/configuration notes

**Coverage Patterns**

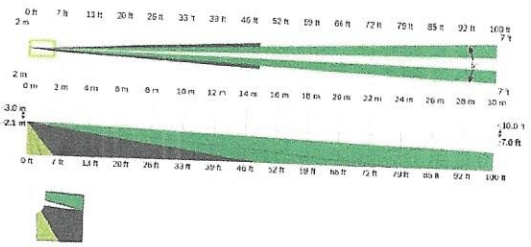



Standard Curtain Coverage 30 m x 2.6 m (100 ft x 8.6 ft)

**Mounting**
The recommended mounting height is 2 m to 3 m (7 ft to 10 ft) with no adjustments required.
Mount the motion detector level, both horizontally and vertically.
Mounting options:

- On a flat wall (surface, semi-flush), with the optional B335-3 Swiveling low-profile mount, or with the optional B328 Gimbal-mount Bracket
- In a corner (the junction of two perpendicular walls)
- On the ceiling with the optional B338 Universal Ceiling-mount Bracket

**Wiring Considerations**
Recommended wire size is 0.2 $mm^2$ to 1 $mm^2$ (26 AWG to 16 AWG).

## Technical specifications

**Electrical**

Power Requirements

| | |
|---|---|
| Voltage (Operating): | 9 VDC to 15 VDC |
| Current (Maximum): | < 26 mA with alarm, trouble, and LEDs active. |
| Current (Standby): | 18 mA at 12 VDC |

Outputs for both Models

| | |
|---|---|
| Tamper: | Normally-closed (NC) contacts (with cover on) rated at 25 VDC, 125 mA maximum. Connect tamper circuit to 24-hour protection circuit. |
| Trouble: | Solid state relay normally-closed (NC) contacts. |
| Alarm: | Solid state relay, normally-closed (NC) contacts, power supervised. 3 W, 125 mA, 25 DC, resistance < 10 Ω. |

## Mechanical

| | |
|---|---|
| **Enclosure Design** | |
| Color: | White |
| Dimensions: | 127 mm x 69 mm x 58 mm (5 in. x 2.75 in. x 2.25 in.) |
| Material: | High-impact ABS plastic |
| **Indicators** | |
| Alarm Indicator: | • Blue LED for TriTech+ alarms<br>• Yellow LED for microwave detection<br>• Red LED for PIR detection |
| **Zones** | |
| Zones: | 28 |

## Environmental

| | |
|---|---|
| Relative Humidity: | 0 to 95%, non-condensing |
| Temperature (Operating and Storage): | -30°C to +55°C (-22°F to +130°F)<br>*For UL Certificated installations, 0°C to +49°C (+32°F to +120°F)* |
| Protection Rating (EN 60529, EN 50102): | IP41, IK04 |

## Ordering information

**ISC-PDL1-WC30G Motion detector, 100ft (30m), curtain**
Provides PIR and microwave, 30 m x 3 m (100 ft x 10 ft) coverage.
Order number **ISC-PDL1-WC30G**

**B328 Mounting bracket, gimbal**
Mounts on a single-gang box and allows rotation of a detector. Wires are hidden inside.
Order number **B328**

**B335-3 Mounting bracket, swivel, low profile**
Swiveling, low-profile, universal bracket for wall mounting. The vertical swivel range is +10° to -20°, while the horizontal swivel range is ±25°.
Order number **B335-3**

**B338 Mounting bracket, ceiling, universal**
Swiveling universal bracket for ceiling mounting. The vertical swivel range is +7° to -16°, while the horizontal swivel range is ±45°.
Order number **B338**

**ISC-PDL1-WC30H Motion detector 30m curtain, 10.588GHz**
Provides PIR and microwave, 30 m x 3 m (100 ft x 10 ft) coverage. For use in France and the United Kingdom.
Order number **ISC-PDL1-WC30H**

**B328 Mounting bracket, gimbal**
Mounts on a single-gang box and allows rotation of a detector. Wires are hidden inside.
Order number **B328**

**B335-3 Mounting bracket, swivel, low profile**
Swiveling, low-profile, universal bracket for wall mounting. The vertical swivel range is +10° to -20°, while the horizontal swivel range is ±25°.
Order number **B335-3**

**B338 Mounting bracket, ceiling, universal**
Swiveling universal bracket for ceiling mounting. The vertical swivel range is +7° to -16°, while the horizontal swivel range is ±45°.
Order number **B338**

## Accessories

**B328 Mounting bracket, gimbal**
Mounts on a single-gang box and allows rotation of a detector. Wires are hidden inside.
Order number **B328**

**B335-3 Mounting bracket, swivel, low profile**
Swiveling, low-profile, universal bracket for wall mounting. The vertical swivel range is +10° to -20°, while the horizontal swivel range is ±25°.
Order number **B335-3**

**B338 Mounting bracket, ceiling, universal**
Swiveling universal bracket for ceiling mounting. The vertical swivel range is +7° to -16°, while the horizontal swivel range is ±45°.
Order number **B338**

**Represented by:**

**Europe, Middle East, Africa:**
Bosch Security Systems B.V.
P.O. Box 80002
5600 JB Eindhoven, The Netherlands
Phone: + 31 40 2577 284
emea.securitysystems@bosch.com
emea.boschsecurity.com

**Germany:**
Bosch Sicherheitssysteme GmbH
Robert-Bosch-Ring 5
85630 Grasbrunn
Germany
www.boschsecurity.com

**North America:**
Bosch Security Systems, Inc.
130 Perinton Parkway
Fairport, New York, 14450, USA
Phone: +1 800 289 0096
Fax: +1 585 223 9180
onlinehelp@us.bosch.com
www.boschsecurity.us

**Asia-Pacific:**
Robert Bosch (SEA) Pte Ltd, Security Systems
11 Bishan Street 21
Singapore 573943
Phone: +65 6571 2808
Fax: +65 6571 2699
apr.securitysystems@bosch.com
www.boschsecurity.asia

© Bosch Security Systems 2019 | Data subject to change without notice
2610618763 | en, V50, 12. Feb 2019

amseco
A POTTER Brand

# ODC-59 SERIES
## OVERHEAD DOOR CONTACT



ODC-59 Mini shown

- UL and ULC listed
- 2" operating gap
- HG - 7" Horizontal gap
- 24" stainless steel armored cable
- Adjustable, aluminum L bracket
- Hermetically sealed reed switch

### Application

The ODC-59 Series Overhead Door Contacts are exclusively designed for rugged high traffic installations. The reed switch is hermetically sealed with a PVC shock absorber enclosed within a solid aluminum housing. Installation wires are protected in a 24" stainless steel armored cable. The ODC-59 Series magnet is mounted on an adjustable L shaped bracket designed for greater flexibility, universal mounting, greater pulling power, and to provide a professional installation appearance.

The ODC-59-HG (horizontal gap) is designed as a solution for damaged or loose fitting doors.
The ODC-59 MINI offers all the same great features in a smaller size for greater installation flexibility. (Not ULC listed)

### ODC-59 Wiring Designations

With Magnet Installed:

| | | |
|---|---|---|
| Red = Normally-Open (N.O.) | Black = Common (Com) | Green = Normally-Closed (N.C.) |

### Dimensions

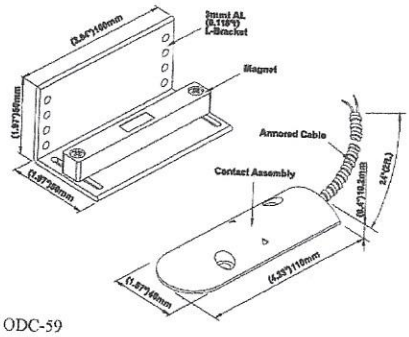


ODC-59

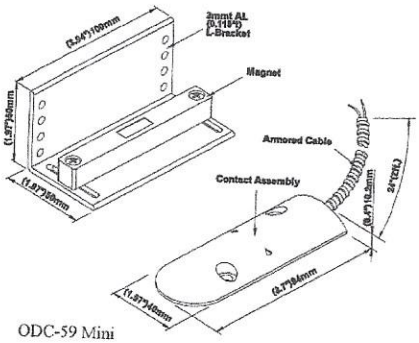


ODC-59 Mini

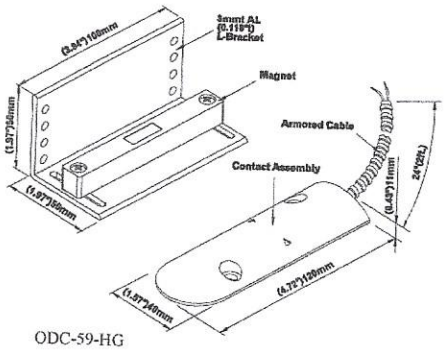


ODC-59-HG

### Ordering Information

| Model | Stock Number | Contact | Contact Rating | Contact Type | Max. Carry Current | Max. Switching Current | Breakdown Voltage | Operating Gap | Temperature Range |
|---|---|---|---|---|---|---|---|---|---|
| ODC-59A | 4410003 | 22AWG 24" Leads | 10VA | Form A N.O. | 2 Amp | .5 Amp | 250VDC | 2" | 32°F - 120°F (0°C - 49°C) |
| ODC-59A-36 | 4410004 | 22AWG 36" Leads | | | | | | | |
| ODC-59B | 4410006 | 22AWG 24" Leads | 3VA | Form C N.O./N.C. | .5 Amp | .2 Amp | 150VDC | | |
| ODC-59A-HG | 4410018 | | 10VA | Form A N.O. | 2 Amp | .5 Amp | 250VDC | | |
| ODC-59B-HG | 4410019 | | 3VA | Form C N.O./N.C. | .5 Amp | .2 Amp | 200VDC | | |
| ODC-59A-MINI | 4410017 | | 10VA | Form A N.O. | 2 Amp | .5 Amp | 250VDC | | |
| Accessories | 4350178 | Magnet and L bracket | | | | | | | |

DSC

*A Tyco International Company*

# DSC PowerSeries Keypads



## Features that make a difference:

**Common to all Keypads:**

- Modern, slim-line landscape keypad
- Large, backlit keypad buttons
- 5 programmable function keys
- Programmable Input/Output terminal
- Individual FAP keys
- Multiple door chime per zone
- Adjustable backlight and keypad buzzer
- Wire channel
- Dual wall-mount and front cover tamper
- Easy-to-install mounting hinge
- Surface or single-gang box mount

## Security at your Fingertips

PowerSeries high-quality, slim-profile keypads achieve a clean, unobtrusive look that homeowners welcome and installers will appreciate for their easy programming and installation. The keypads feature an input/output terminal that can be programmed to operate as a zone input, programmable output or as a low temperature sensor. The keypads also include adjustable backlit keys that address low-light situations and five programmable keys for simple one button activation of system functions. PK5500/RFK5500 64-zone full-message keypads support eight languages, global partition status and full, 32-character programmable phrases.

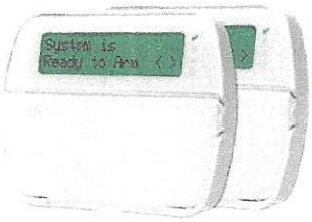


PK5500 | RFK5500

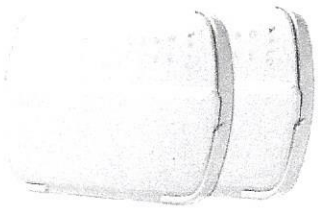

PK5508 | RFK5508

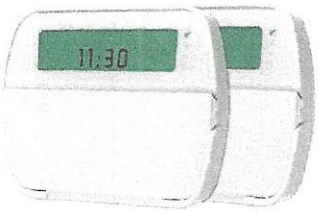


PK5501 | RFK5501

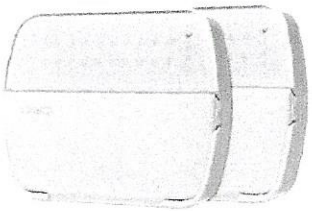

PK5516 | RFK5516

DSC

*A Tyco International Company*

## Easy To Use

To simplify usage, the keypads feature five programmable keys for easy one-button activation of system functions. The default tasks assigned to the five function keys are stay arming, away arming, door chime, smoke detector reset and quick exit. With the quick exit function there's no need to disarm and rearm the system every time an occupant leaves the house or lets the dog out, for example.

## Flexibility

The keypads' integrated temperature sensor can be programmed to activate when room temperature dips below 43° F (6° C) and restores at 47° F (8° C). Built-in logic prevents the panel from cycling in and out of alarm mode during minor temperature fluctuations, helping to reduce false alarms.)

## Wireless Convenience

RF versions of the keypads are available. They include all of the same features as their hardwired equivalents and are able to support 32 wireless zones and 16 wireless keys without taking up a wireless zone slot.

**Full message LCD Keypad languages supported:**

Croatian, Czech, Danish, Dutch, English, Estonian, Finnish, French, German, Greek, Hungarian, Italian, Latvian, Lithuanian, Norwegian, Polish, Portuguese, Slovak, Spanish, Swedish

## Compatibility

The keypads are compatible with all PowerSeries control panels.

## Specifications

| | |
|---|---|
| Dimensions | 6 1/16" x 4 7/16" x 13/16" (154 mm x 113 mm x 20.5 mm) |
| LCD Viewable Area | 3 9/10" x 15/16" (99 mm x 24 mm) |
| Current Draw | 125 mA (Max) |
| Voltage | 12 VDC Nominal |
| Operating Environment | 32° to 120° F (0° to 49° C) |
| Relative Humidity | 5 to 93% |

## Ordering Information:

| | |
|---|---|
| PK5500 | 64-Zone Full-Message LCD Keypad |
| RFK5500 | Wireless 64-Zone Full-Message LCD Keypad |
| PK5501 | 64-Zone LCD Picture ICON Keypad |
| RFK5501 | Wireless 64-Zone LCD Picture ICON Keypad |
| PK5516 | 16-Zone LED Keypad |
| RFK5516 | Wireless 16-Zone LED Keypad |
| PK5508 | 8-Zone LED Keypad |
| RFK5508 | Wireless 8-Zone LED Keypad |

PN 3009 0954 REV2



For product information
www.dsc.com
Product specifications are subject to change without notice. Certain product names mentioned herein may be trade names and/or registered trademarks of their companies.
©2011 Tyco

# SD-80

# RECESSED CONTACTS

## 1"(25mm) Steel Door Recessed Type

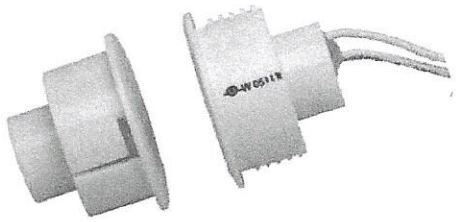

- Contact Size: 1"×.84"(25mm×21.3mm)
- Standard Magnet Size: 1"×.84"(25mm×21.3mm)
- Standard Gap: 1.1"(28mm)
- Colors: White, Brown
- 12"(305mm) 22 AWG Leads Standard
- Longer leads available.

## Specifications

| Part Number | Gap Inch(mm) | Loop Open/Closed | Reed Form | Max. Contact Rating (W) | Max. Initial Contact Resistance (mΩ) | Max. Switching Voltage (V) | Max. Switching Current (A) |
|---|---|---|---|---|---|---|---|
| **SD-80** | 1.1"(28) | CLOSED | Normally Open | 10 | 100 | AC110/DC100 | 0.5 |
| **SD-81B** | 1.1"(28) | OPEN | Normally Closed | 3 | 100 | AC30/DC30 | 0.2 |
| **SD-80 WG** | 1.26"(32) | CLOSED | Normally Open | 10 | 100 | AC110/DC100 | 0.5 |
| **SD-82C** | 1.1"(28) | SPDT | SPDT | 3 | 100 | AC30/DC30 | 0.2 |
| **SD-84C** | .75"(19) | DPDT | DPDT | 3 | 100 | AC30/DC30 | 0.2 |

OPERATING TEMPERATURE:-40°C to +60°C

## Outline Dimensions

Unit: inch(mm)

**SD-80/SD-81B**

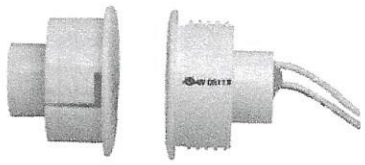

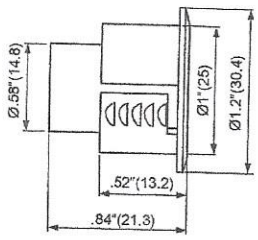


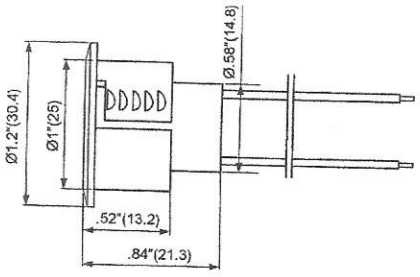


"We Contact The World"®

The Best Guarantee Since 1984 : $50-1

TANE ALARM PRODUCTS

906 JERICHO TURNPIKE, NEW HYDE PARK, NY 11040
Tel: 800-852-5050 • 516-328-3351 • Fax: 516-326-9125
www.tanealarm.com • E-MAIL: info@tanealarm.com

# SD-80

## RECESSED CONTACTS

### Outline Dimensions

Unit: inch(mm)

**SD-80 WG**

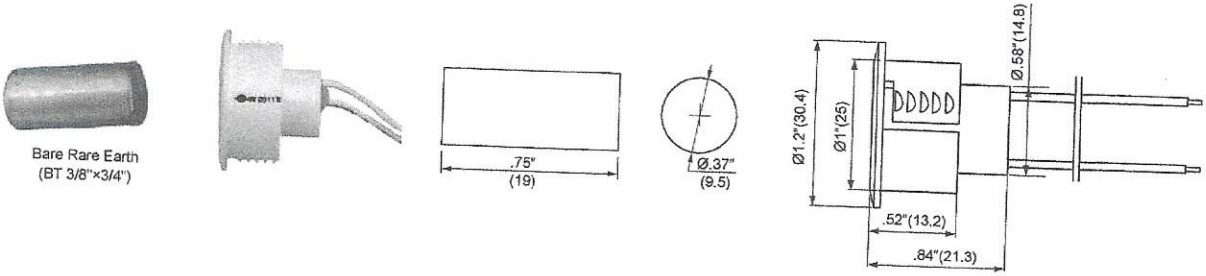


**SD-82C**

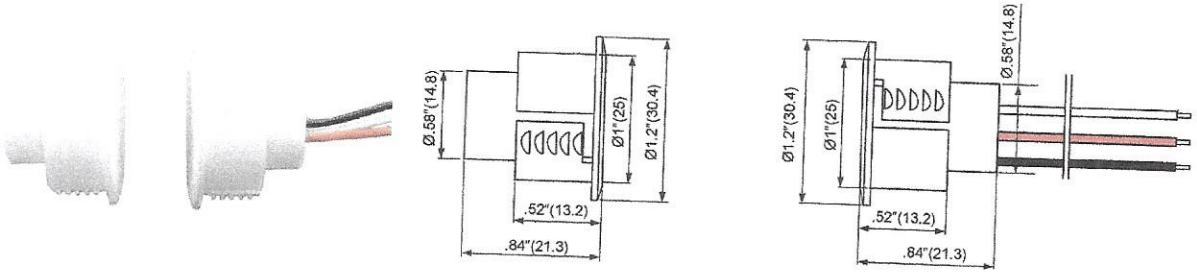


**SD-84C**

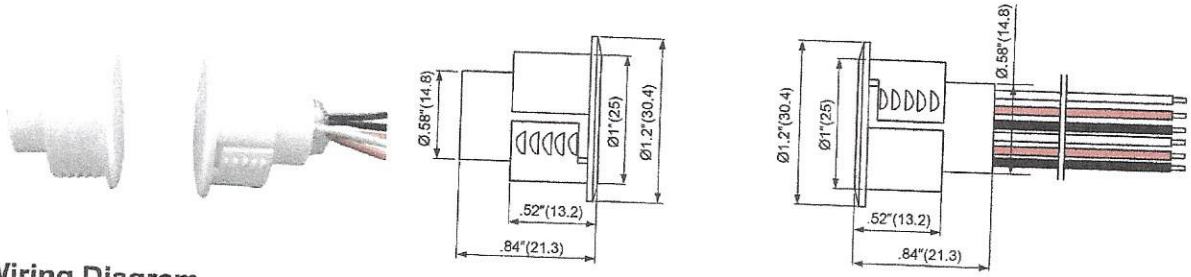


### Wiring Diagram

**SD-82C**

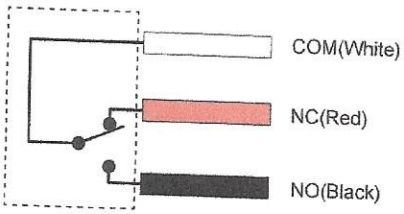


**SD-84C**

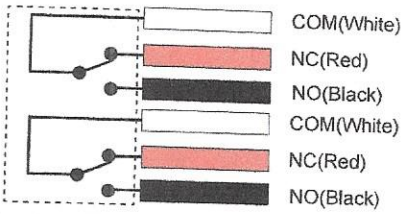




"We Contact The World"®

The Best Guarantee Since 1984 : $50-1

TANE ALARM PRODUCTS

906 JERICHO TURNPIKE, NEW HYDE PARK, NY 11040
Tel: 800-852-5050 • 516-328-3351 • Fax: 516-326-9125
www.tanealarm.com • E-MAIL: info@tanealarm.com

Arctic Electrical Nunavut Ltd
PO Box 1381, Iqaluit, NU X0A 0H0 -P867-975-3494

# 28 31 01 - Fire Alarm Systems

**Date: Jun 12, 2018**

REVIEWED BY CONTRACTOR
Kudlik Construction Ltd.
NAME: Sandra Rousseau P.Eng
DATE: Jun 12, 2018

# Transmittal

**Arctic Electrical Nunavut Ltd**
PO Box 1381
Iqaluit, Nu.
X0A 0H0
Phone: 867-975-3494
**From: Lee Pitcher**



SE-02
PO-P18-123

**Project** **Waste Wate Treatment Plant**
**Location** Iqaluit NU
**To** Kudlik Construction
Contact: Sandra Rousseau P.Eng.
srousseau@kudlik.biz

Attached are the following items:

- [x] Drawings
- [ ] Prints
- [ ] Plans
- [x] Specifications
- [ ] Information
- [ ] Submittals

Other:

THESE ARE TRANSMITTED FOR:

- [ ] Prior Approval
- [X] Approval
- [ ] Approval as Submitted
- [ ] Approval as Noted
- [ ] Resubmittal for Approval
- [ ] Corrections
- [ ] Your Use
- [ ] Review and Comment
- [ ] Record

Bids due on:
Other:

| Qty | Type | MFG | Part |
|---|---|---|---|

Section 28 31 01 Fire Alarm System

**Notes:**
Please review the attached approval drawings carefully. Production cannot be scheduled until a signed copy of the final approved drawing are received. Be aware that once drawings are approved, any errors due to incorrect information are the responsibility of the client.

Do not hesitate to contact me if you have any questions or concerns.




C3779

# Job Name: IQALUIT WASTE WATER TREATMENT PLANT

**Prop Number:** **27-218-3016-000**

Customer: ARCTIC ELECTRICAL

PO Number: P18-123

Date: 2018/06/12

Section 28 31 01 Fire Alarm System

Chubb EDWARDS

28 31 01

LIFE SAFETY & INCIDENT MANAGEMENT

# Intelligent Fire Alarm Systems

## iO64, iO1000




FDNY
COA 6227

7165-1657:
0244

S3000

STANTEC PROJECT #: 110126045

SUBMITTAL # ELE-002 Fire Alarm Systems

This review by Stantec is for general conformance with the design concept of Stantec's design of the:

☐ Architectural ☐ Structural ☐ Mechanical ☑ Electrical ☐ Other

component(s) only and does not mean that Stantec has verified or approves the shop drawing(s). The Contractor remains solely responsible for the shop drawing(s) and this review by Stantec does not relieve the Contractor of the Contractor's responsibility for errors or omissions in the shop drawing(s) or for meeting all requirements of the contract documents. This review does not mean that Stantec approves the detailed design inherent in the shop drawing, responsibility for which shall remain with the Contractor submitting same, nor does this review mean that Stantec accepts any deviation of the shop drawing(s) from the contract documents. The Contractor is responsible for confirming all dimensions and correlating them at the job site, for all construction means, methods and techniques, and for coordination of construction work of all trades, including coordination of all shop drawings.

Stantec

☑ REVIEWED

☐ REVIEWED, AS NOTED

☐ REVISE AND RESUBMIT

☐ NOT REVIEWED

DATE June 20, 2018

BY Chester Martinez, E.I.T.

## Overview

EDWARDS brand intelligent life safety systems offer the power of high-end intelligent processing in configurations that deliver uncomplicated solutions for small to mid-sized applications. With intelligent detection, electronic addressing, automatic device mapping, optional Ethernet® connectivity, and a full line of easily-configured option cards and modules, these flexible systems offer versatility that benefits building owners and contractors alike.

***The iO64*** provides one Class A or Class B intelligent device loop that supports up to 64 device addresses, and two Class B Notification Appliance Circuits (NACs). Optional Class A device wiring is available with the use of a module.

***The iO1000*** provides one Class A or Class B intelligent device loop that supports up to 250 device addresses. Loop controller modules may be added in combination to expand total system capacity in 250-point increments to up to 1,000 device addresses. The iO1000 panel includes four NACs that may be wired for either Class A or Class B operation.

***The RZI16-2*** module adds even more capacity to iO installations by adding up to 16 conventional device circuits and two additional notification appliance circuits. This makes them an ideal retrofit solution that can accommodate new intelligent detectors, as well as existing conventional devices.

iO Series supports a wide range of high-end features, including:

- Signature Series intelligent modules, detectors, and bases
- R-Series remote annunciators
- SIGA-REL Releasing Modules
- Fully integrated CO detection using Signature Series detectors with or without audible signaling

## Features

- Auto-programming speeds installation time
- Supports Signature Series intelligent modules and detectors
- Combines the Signature intelligent releasing module with Signature multisensor detectors for reliable fire suppression
- Form C contacts for alarm and trouble, Form A for supervisory
- Electronic addressing with automatic device mapping
- Optional Ethernet port for diagnostics, programming and a variety of system reports
- Two programmable switches with LEDs and custom labeling
- Supports Genesis horn silence over two wires, and UL 1971-compliant strobe synchronization
- Class B or Class A wiring
- Ground fault detection by module
- Supports up to eight serial annunciators, (LCD, LED-only, and graphic interface)
- Can use existing wiring for most retrofit applications
- Upload/download remotely or locally
- Two-level maintenance alert reporting
- Pre-alarm and alarm verification by point
- Adjustable detector sensitivity
- 4 x 20 character backlit LCD display
- Optional earthquake hardening: seismic Importance Factor 1.5
- Standalone operation
- Transmission test frequency by hour

# Application

28 31 01

EDWARDS iO Series life safety systems are powerful intelligent solutions for small to mid-sized buildings. Advanced intelligent technology delivers the benefits of flexible system installation, while clean and easy-to-operate user interfaces make panel operation and system maintenance quick and intuitive.

### The smart choice

Signature Series electronic addressing eliminates the tedium of setting dipswitches, and automatic device mapping ensures that each device resides on the system at its correct location. Meanwhile, innovative programming allows the designer to customize the system to precisely suit the needs of the building owner.

### Reliability you can count on

The inherent fault-tolerant characteristics of Analog/Addressable Technology boosts the reliability of EDWARDS fire alarm systems. When combined with iO Series smoke and heat detectors, these systems deliver a level of dependability not previously available for small to mid-sized applications. All EDWARDS systems are built to exacting reliability benchmarks and meet international standards for quality, in addition to agency listings for dependability.

### Clear-cut remote annunciation

Remote annunciation is a strong suit of the iO Series fire alarm systems. Up to eight annunciators can be installed on a single system. Compatible annunciators include a range of LED and LCD models that provide zone or point annunciation, as well as common control capabilities. iO control panels also supports graphic annunciation with optional RA Graphic Annunciator interface modules. Each interface provides common control and 32 LEDs.

### Flexibility built right in

Two fully-programmable front panel switch/LED combinations provide an added measure of flexibility. Their slide-in labels take the mystery out of custom applications, and present a clean finished appearance.

### Perfect for retrofits

EDWARDS iO Series control panels are particularly well-suited to retrofit applications. All connections are made over standard wiring – no shielded cable required. This means that in most situations existing wiring can be used to upgrade a legacy control panel to iO technology without the expense or disruption of rewiring the entire building. iO control panels also support the ingenious RZI16-2 Zone Module, which adds up to 16 conventional circuits and two NACs. This combination easily accommodates new intelligent detection alongside existing conventional circuits, making it an superior solution in the retrofit market.

### Signals with a difference

iO system NACs are configurable to fully support the advanced signaling technology of EDWARDS Genesis and Enhanced Integrity notification appliances. These devices offer precision synchronization of strobes to UL 1971 standards. For Genesis devices, enabling this feature allows horns to be silenced while strobes on the same two-wire circuit continue to flash until the panel is reset.

### A complete line of accessories

iO Series life safety systems are supported by a complete line of analog/addressable detectors, modules and related equipment. Consult the Ordering Information section for details.

# Programming and remote diagnostics

EDWARDS iO Series life safety systems are simple to set up, yet offer advanced programming features that put these small building panels into a class of their own. The auto programming feature quickly gets the panel operational using factory default settings. Basic zone and point settings can be programmed through the front panel interface, so the system is up and running in no time.

For more advanced system configuration and correlation groups programming, iO Series systems interface to a PC running compatible iO-CU software. This option offers full system configuration in the familiar Windows® operating environment. Connection is made to a laptop through the panel's optional RS-232 communications port, which can also be used to connect a system printer.

Among the many innovative features of iO Series control panels is the optional network card. This module provides a standard 10/100 Base T Ethernet® network connection that permits access to the control panel from any remote location with the correct communications protocols. The connection can be used to download to the panel from the iO-CU, or upload and view system reports using the iO-CU.

Available system reports include:

- Correlation groups
- Device maintenance
- Internal status
- System status
- Dialer
- Device details
- History
- System configuration
- Walk test
- CO runtime

# Dimensions

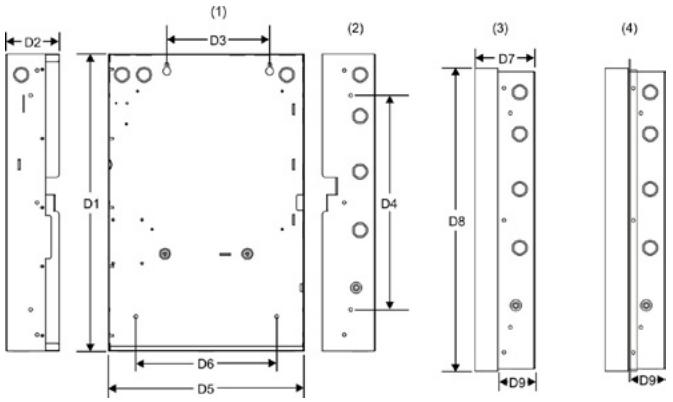


(1) Surface Mounting Holes
(2) Semi-flush mounting Holes
(3) Backbox with Door Attached
(4) Backbox with door and trim kit attached.

**Panel dimensions, in (cm)**

| Model | D1* | D2 | D3 | D4 | D5* | D6 | D7 | D8 | D9 |
|---|---|---|---|---|---|---|---|---|---|
| iO1000 | 28.0 (71.1) | 3.85 (9.8) | 9.0 (22.8) | 22.0 (55.8) | 15.75 (40.0) | 10.25 (26.0) | 4.4 (11.1) | 28.2 (71.6) | 2.7 (6.8) |
| iO64 | 21.5 (54.6) | 3.85 (9.8) | 7.5 (19.0) | 15.5 (39.4) | 14.25 (36.2) | 10.25 (26.0) | 4.5 (11.4) | 21.7 (55.1) | 2.7 (6.8) |

** Add 1-1/2 in. (3.81 cm) to D1 and D5 dimensions for trim kit. The trim kit provides 0.75 inches (1.9 cm) of trim to the top, bottom, and sides of the backbox.*

# System Layout

28 31 01

## iO1000

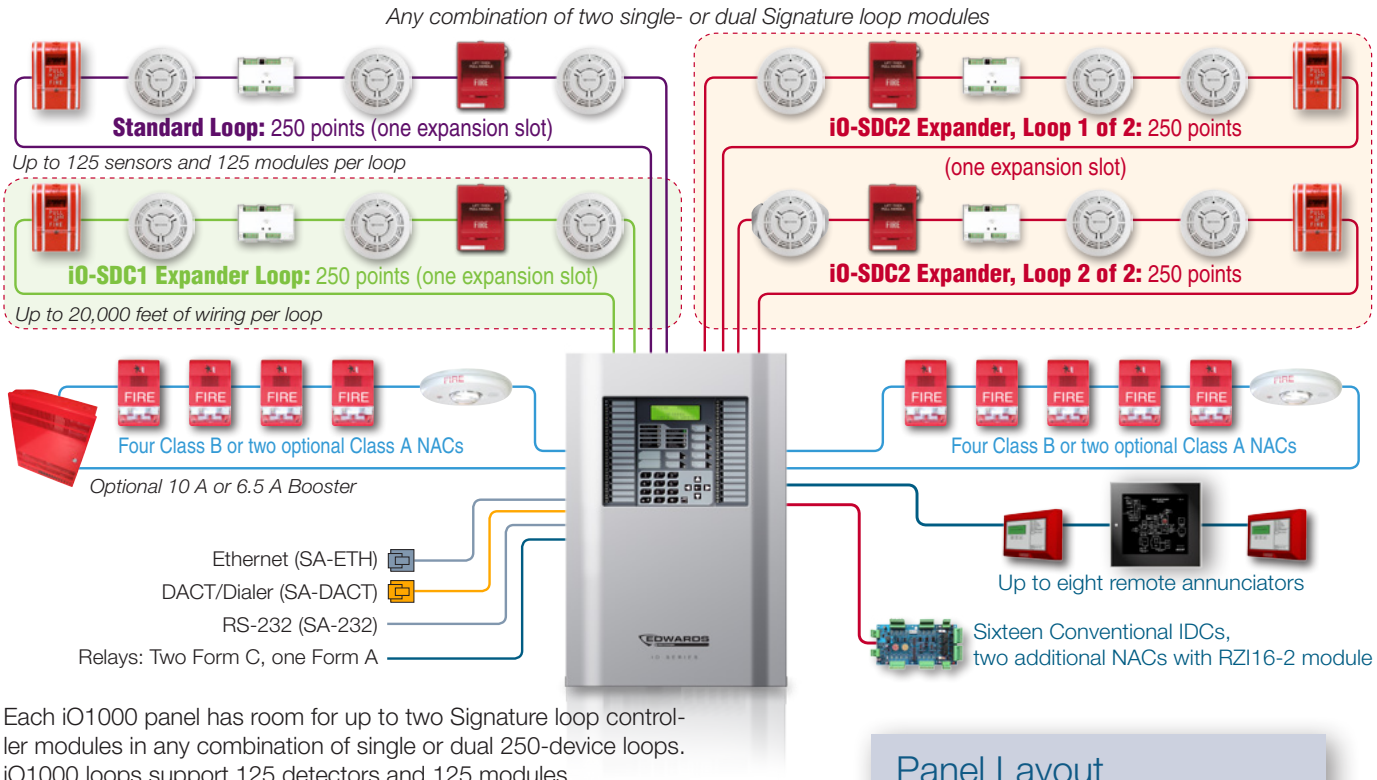


Each iO1000 panel has room for up to two Signature loop controller modules in any combination of single or dual 250-device loops. iO1000 loops support 125 detectors and 125 modules.

## iO64

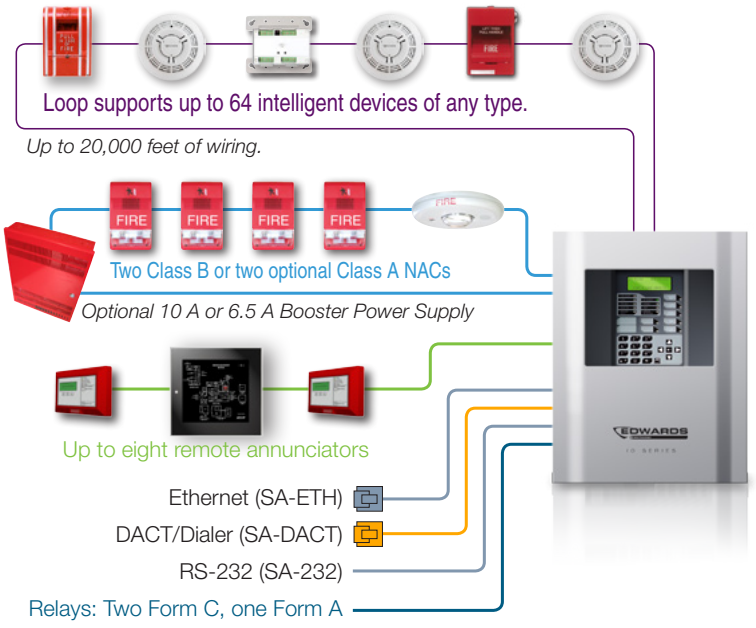


Each iO64 panel ships with one Signature loop controller that supports 64 devices of any type. This panel's device capacity cannot be expanded.

## Panel Layout

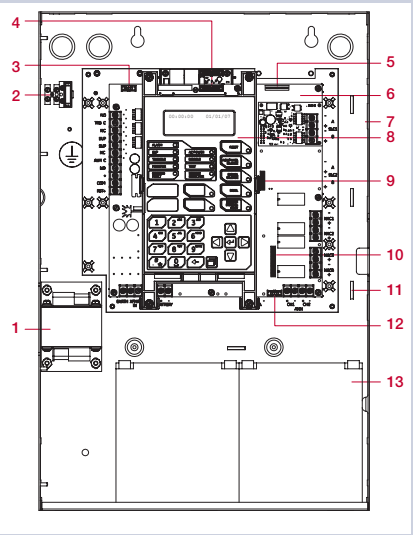


1 Transformer
2 Main AC wiring block & fuse holder
3 RS-232 card connector (J3)
4 Dialer card connection (J8)
5 Ethernet card connector (J1)
6 Main circuit board
7 Panel backbox enclosure
8 Operator interface
9 SLC card connector (J7)
10 Class A card connector (J2)
11 Tie wrap mounts
12 LED expander connector (J6)
13 Standby batteries

28 31 01

## Signature device loop

The system provides one Signature device loop circuit with a total capacity of 125 detectors and 125 module addresses. The loop circuit is supervised for opens, shorts, and grounds.

| Circuit specifications | iO1000 | iO64 |
|---|---|---|
| Device loops | One Class B or A loop, supporting 125 detectors and 125 modules. Expandable to four loops. | One Class B or A loop, supporting 64 devices of any kind. |
| Communication line voltage | Maximum 20 V peak-to-peak | |
| Circuit current | 0.5 A max | |
| Circuit impedance | 66Ω total, 0.5 µF, max | |
| Isolators | 64 maximum | |
| Signal Synchronization | Supported on a system-wide basis (all device loops) when using a SIGA-CC1S or SIGA-MCC1S module and Genesis or Enhanced Integrity notification appliances. | |

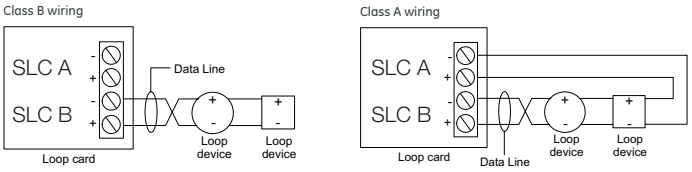


## Notification appliance circuits (TB2)

iO1000 control panels come equipped with four notification appliance circuits. iO64 control panels come with two NACs. Each circuit can be individually configured for continuous, temporal, synchronized, and coded output.

| Specifications | iO1000 | iO64 |
|---|---|---|
| Circuit Type | 4 Class B or 2 Class A | 2 Class B or 2 Class A with SA-CLA module |
| Voltage | 24 VFWR | |
| Current | 6.0 A total, 2.5 A max. per circuit at 120/230 VAC 60 Hz. 5.0 A total, 2.5 A max. per circuit at 230 VAC 50 Hz. | 3.75 A total, 2.5 A max. per circuit at 120/230 VAC 60 Hz. 3.0 A total, 2.5 A max. per circuit at 230 VAC 50 Hz. |
| Impedance | 26 Ω total, 0.35 µF max | |
| EOLR | 15 K Ω, ½ W | |
| Synchronization | Supported system-wide | |

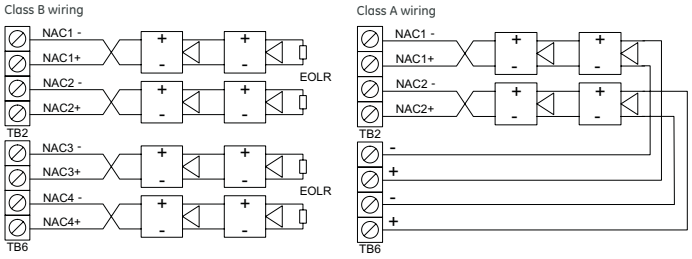


Marking indicates output signal polarity when the circuit is active. Polarity reverses when the circuit is not active. Wire notification appliances accordingly. Notification appliance polarity shown in active state.

## Auxiliary & smoke power outputs (TB3)

The control panel provides two auxiliary power outputs that can be used for powering ancillary equipment such as remote annunciators and two wire smoke detectors. Aux 2 can be software selected to operate continuously. The circuit is supervised for shorts and grounds.

| Circuit specifications | |
|---|---|
| Circuit voltage range | 21.9 to 28.3 V |
| Resettable circuit (Aux power 2) | 24 VDC nominal at 500 mA |
| Continuous circuit (Aux power 1) | 24 VDC nominal at 500 mA. Use this circuit for powering two-wire smoke detectors. |

Note: Any current above 0.5 amp connected to both Aux 1 and 2 will reduce the total available NAC power by that amount.

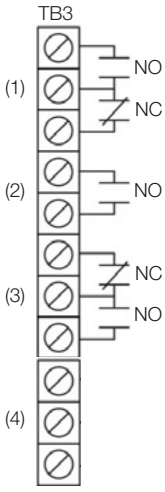


(1) Trouble
(2) Supervisory
(3) Alarm
(4) Smoke/Aux

## Alarm, trouble, and supervisory relay (TB3)

The trouble relay is normally-open, held closed, and opens on any trouble event or when the panel is de-energized. The supervisory relay is normally-open, and closes on any supervisory event. The alarm relay changes over on any alarm event.

### Relay specifications

| | Alarm | Trouble | Supervisory |
|---|---|---|---|
| Type | Form C | | Form A |
| Voltage | 24 VDC at 1 A resistive | 24 VDC at 1 A resistive | |

Relay circuits can only be connected to power-limited sources.

## Annunciator loop (TB4)

The control panel provides a connection for up to eight serially driven and supervised remote annunciators.

### Circuit specifications

| | |
|---|---|
| Device loops | Class B (Style Y) or Class A (Style Z) |
| Circuit voltage | 2.55 V |
| Circuit current | 30 mA max |
| Circuit impedance | Up to 8 annunciators or 4000 feet |

Class B

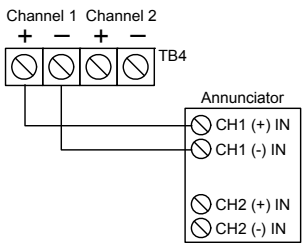


Class A

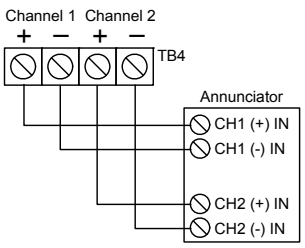

# Option Cards

28 31 01

EDWARDS iO Series panels are supported by a complete line of modules and related equipment that enhance performance and extend system capabilities. Option cards plug directly into the control panel main circuit board or are connected to it with a ribbon cable. After installation, terminals remain accessible. The cabinet provides ample room for wire routing, keeping wiring neat at all times.

## Single and Dual Loop Controller Cards

The iO-SDC1 is a single loop controller card that can be used with the iO64 as a replacement for the standard 64-point loop, or with the iO1000 as a 250-point expansion module.

The iO-SDC2 is a 500-point dual loop controller card for the iO1000 that provides two SLC circuits, each with 125 detector addresses and 125 module addresses.

| Specifications | iO-SDC1 | iO-SDC2 |
|---|---|---|
| Device Addresses | iO1000: one loop, 250 device addresses<br>iO64: 64 addresses | iO1000: two loops, 500 device addresses |
| Wiring | Class B or Class A | |
| Operating Voltage | 24 VDC | |
| Operating Current (fully loaded loop) | Standby: 55 mA<br>Alarm: 80 mA | Standby: 45 mA<br>Alarm: 70 mA |
| *Note: These ratings do not include the use of two-wire smoke modules.* | | |
| Communication Line Voltage | Max. 20.6 V peak-to-peak | |
| Terminal Rating | 12 to 18 AWG (0.75 to 2.5 $mm^2$) | |
| Circuit Current | 0.5 A max. | |
| Max total loop resistance | 66 Ω | |
| Max total loop capacitance | 0.5 µF | |
| Isolators | 64 isolators maximum per loop (total both isolator bases and modules) | |
| Ground Fault Impedance | 0 to 5 kΩ | |
| Operating Environment | 32 to 120°F (0 to 49°C)<br>0 to 93% noncondensing at 90°F (32°C) | |

## SA-ETH Ethernet Interface Card

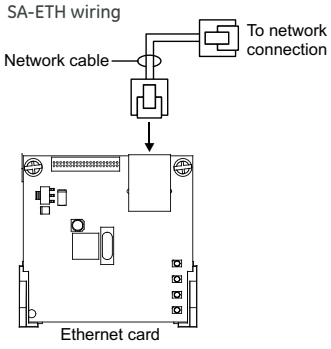


The SA-ETH card provides a standard 10/100 Base T Ethernet network connection for connecting to an intranet, a local network, or the Internet. The card can be used to download configuration programming from the iO-CU to the panel.

The Ethernet card is installed on the plastic assembly and connects to the main circuit board via a ribbon cable.

| SA-ETH specifications | |
|---|---|
| Ethernet | 10/100 Base T |
| Operating environment | |
| Temperature | 32 to 120°F (0 to 49°C) |
| Humidity | 0 to 93% RH, noncondensing at 90°F (32°C) |

## RZI16-2 Remote Zone Interface Module

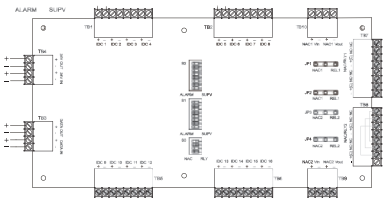

The RZI16-2 Addressable Remote Zone Interface Module is an addressable device that provides connections for sixteen Class B Initiating Device Circuits and two Class B Supervised Output Circuits. The inputs and outputs can be configured individually for several device types.

It requires 18 consecutive addresses on the Signaling Line Circuit (SLC). Addresses are assigned electronically. There are no address switches to set.

The RZI16-2 incorporates two 8-segment DIP switches that are used to select the Alarm or Supervisory default device type for each of the 16 IDC circuits. The module also includes one 4-segment DIP switch used to select the default Relay or NAC output device type. Device types other than the default are accomplished through programming.

| RZI16-2 Specifications | |
|---|---|
| Voltage | |
| 24V/Aux nominal: | 24 VDC |
| Supervisory current: | 250 mA at 24 VDC nominal |
| Alarm Current | 1000 mA |
| 24V/Aux minimum: | 18.4 VDC |
| 24V/Aux maximum: | 26.4 VDC |
| NAC1, NAC2 nominal: | 24 VDC |
| Current | |
| Standby current for 4.7 k EOL (U.S.) | 4.8 mA/ circuit |
| Standby current for 3.9 k EOL (Canada) | 5.7 mA/ circuit |
| Alarm current at nominal voltage | 31.1 mA/ circuit |
| Relay outputs | |
| Quantity | 2 |
| Type Rating (pilot duty) | Programmable 24 VDC at 2.5 A |
| Input circuit wiring resistance | 25 Ω per wire |
| Initiating device circuits | |
| Quantity | 16 |
| EOL resistor | 4.7 kΩ (U.S.); 3.9 kΩ Canada |
| Zone voltage | 22.78 V for 4.7 kΩ (U.S.)<br>22.08 V for 3.9 kΩ (Canada) |
| Alarm current | 31.1 mA/ channel at nominal voltage |
| Alarm impedance range | < 680 Ω |
| Trouble impedance range | > 5.55 kΩ |
| Supervised output circuits | |
| EOL resistor | 15 kΩ |
| Quantity | 2 |
| Short circuit detection | < 2.6 kΩ |
| Open circuit detection | > 61.9 kΩ |
| Contact ratings | 24 VDC at 2.5 A (5 A for two NACs) |
| Compatible cabinets | MFC(A), iO1000, APS |

## SA-DACT Dialer

The SA-DACT provides communications between the control panel and the central station over a telephone line system. It transmits system status changes (events) to a compatible digital alarm communicator receiver over the public switched telephone network. The dialer is capable of single, dual, or split reporting of events to two different account and telephone numbers. The modem feature of the SA-DACT can also be used for uploading and downloading panel configuration, history, and current status to a PC running the iO-CU.

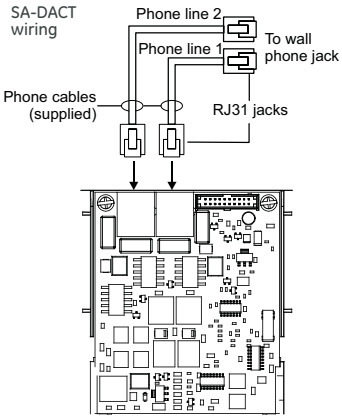


The dialer phone lines connect to connectors on the dialer's main circuit board. Phone line 1 connects to connector J4 and phone line 2 connects to connector J1.

The SA-DACT queues messages and transmits them based on priority (alarm, supervisory, trouble, and monitor). Activations are transmitted before restorations.

The SA-DACT is installed on the plastic assembly and connects to the main circuit board via a ribbon cable.

| SA-DACT specifications | |
|---|---|
| Phone line type | One or two loop-start lines on a public, switched network |
| Phone line connector | RJ-31/38X (C31/38X) |
| Communication formats | Contact ID (SIA DC-05) |
| Operating environment | |
| Temperature | 32 to 120°F (0 to 49°C) |
| Humidity | 0 to 93% RH, noncondensing at 90°F (32°C) |

| Compatible DACRs | | |
|---|---|---|
| **Receiver** | **Models** | **Formats** |
| Ademco | 685 | Contact ID |
| FBII | CP220 | Contact ID |
| Osborne-Hoffman | OH 2000 | Contact ID |
| Bosch | D6600 | Contact ID |
| Silent Knight | 9800 | Contact ID |
| Sur-Gard | SG-MLR1, MLR2 | Contact ID |

## SA-232 RS-232 interface

The SA-232 card provides an RS-232 interface with iO panels. It can be used for connecting a printer to the control panel to print system events. The card also can be used for connecting a computer to download a configuration program from the iO-CU to the control panel.

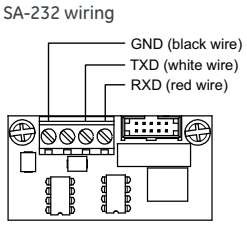


The RS-232 card is installed on the plastic assembly and connects to the main circuit board via a ribbon cable.

| SA-232 specifications | |
|---|---|
| Operating voltage | Standard EIA-232 |
| Terminal rating | 12 to18 AWG (0.75 to 2.5 sq mm) |
| Operating environment | |
| Temperature | 32 to 120°F (0 to 49°C) |
| Humidity | 0 to 93% RH, noncondensing at 90°F (32°C) |

## SA-CLA Class A Module (iO64 only)

The SA-CLA card provides Class A capability for NAC wiring. Its terminal block provides the wiring connection for NAC return wiring. The card is required for annunciator Class A wiring even though this wiring does not return to the SA-CLA card. The SA-CLA is compatible with iO64 control panels only. iO1000 panels are Class A Ready. The SA-CLA is installed directly to the control panel circuit board using its plastic standoffs and plug connection.

| SA-CLA specifications | |
|---|---|
| Operating voltage | 24 VFWR |
| Operating current | 3.75 A FWR total at 120/230 VAC 60 Hz<br>3.0 A FWR total at 230 VAC 50 Hz<br>2.5 A max per circuit |
| Circuit impedance | 26 ohms, 0.35uF |
| Terminal rating | 12 to18 AWG (0.75 to 2.5 sq mm) |
| Operating environment | |
| Temperature | 32 to 120°F (0 to 49°C) |
| Humidity | 0 to 93% RH, noncondensing at 90°F (32°C) |

## D16L-iO LED Display Expander (iO1000 only)

The D16L-iO LED Display Expanders provide LED annunciation for up to 16 zones. It provides two LEDs for each zone. Two D16L-iO LED display expanders can be installed in each iO1000 panel.

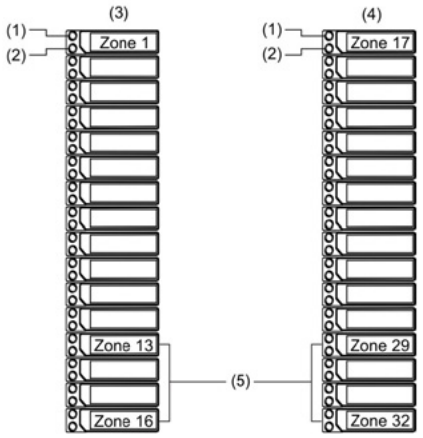


(1) LED 1
(2) LED 2
(3) LED Expander 1
(4) LED Expander 2
(5) Alarm/non-alarm and trouble zone LEDs

# Specifications

| | iO64 | iO1000 |
|---|---|---|
| Device loops | 1 loop Class B or Class A (Styles 4, 6, 7) supporting up to 64 device addresses (any combination of detectors and modules)<br>Maximum T-taps: 63<br>(each device can be on its own branch) | 1 loop, expandable to 4, Class A or B (Styles 4, 6, 7), each loop supporting up to 250 device addresses (125 detectors and 125 modules max.). Addresses 1 to 125 are for detectors and addresses 126 to 250 are for modules<br>Maximum T-taps/loop: 124 |
| Notification appliance circuits | 2 Class B (Style Y), Class A (Style Z) optional<br>3.75 A FWR total at 120/230 VAC 60 Hz<br>3.0 A FWR total at 230 VAC 50 Hz<br>2.5 A FWR each max. per circuit | 4 Class B (Style Y) or 2 Class A (Style Z)<br>6.0 A FWR total at 120/230 VAC 60 Hz<br>5.0 A FWR total at 230 VAC 50 Hz<br>2.5 A FWR each max. per circuit |
| Primary power | 120 VAC, 60 Hz, 1.3 A max.<br>230 VAC, 50-60 Hz, 0.62 A max. | 120 VAC, 60 Hz, 2.0 A max.<br>230 VAC, 50-60 Hz, 0.97 A max. |
| Base panel current standby | 155 mA | 172 mA |
| Base panel current alarm | 204 mA | 267 mA |
| Input zones | 16 max. | 32 max. |
| Remote annunciator | 8 drops max., RS-485 Class B, Class A is optional<br>Data line length: 4,000 ft. (1,219 m) | 8 drops max., RS-485 Class A or B<br>Data line length: 4,000 ft. (1,219 m) |
| Operating voltage | 24 VDC panel | |
| Auxiliary power output circuit | Aux power 1: 500 mA, 24 VDC<br>Aux power 2: 500 mA, 24 VDC (1 A possible if you reduce total available NAC power by 500 mA)<br>Output: 28.3 to 21.9 VDC, special application<br>*Note: For a list of compatible devices, see the iO64 and iO1000 Series Compatibility List (P/N 3102353-EN)* | |
| Loop circuit | Maximum loop resistance: 66 Ω<br>Maximum loop capacitance: 0.5 µF<br>Communication line voltage: Maximum 20.6 V peak-to-peak<br>Operating current (fully loaded loop) Stand by: 55 mA/45 mA<br>Alarm: 125 mA/115 mA (not including two-wire smoke modules)<br>Circuit current: 0.5 A max. Style 4, 6, and 7 wiring<br>Max. resistance between isolators: Limited only by overall wire run lengths<br>64 isolators maximum per loop (total both isolator bases and modules) | |
| Batteries | Type: Sealed lead acid<br>Voltage: 24 VDC<br>Charging current: 2.47 A max. Amp hour capacity: 26 Ah<br>Standby operation: 24 hour or 60 hour<br>Placement: Up to two 10 Ah batteries will fit in the iO64 control panel cabinet and two 18 Ah batteries will fit in the iO1000 control panel cabinet. If larger batteries are required, use an EDWARDS battery cabinet. | |
| SA-DACT dialer | Phone line type: One or two loop-start lines on a public, switched network<br>Phone line connector: RJ-31/38X (C31/38X)<br>Communication formats: Contact ID (SIA DC-05)<br>Operating current Standby/Alarm: 41 mA Max.: 100 mA<br>FCC registration number: GESAL01BSADACT<br>Industry Canada Registration number: 3944A-SADACT<br>Ringer equivalence number: 0.1B | |
| Ground fault impedance | 0 to 5 kΩ | |
| Alarm contact | Form C N.O. 24 VDC at 1 A (resistive load) | |
| Trouble contact | Form C 24 VDC at 1 A (resistive load) | |
| Supervisory contact | Form A N.O. 24 VDC at 1 A (resistive load) | |
| Environmental | Temperature: 0 to 49°C (32 to 120°F) Relative humidity: 0 to 93% noncondensing | |
| Terminal rating | All terminals rated for 12 to 18 AWG (0.75 to 2.5 $mm^2$) | |

LIFE SAFETY & INCIDENT MANAGEMENT

Contact us...

Email: edwards.fire@fs.utc.com
Web: *Edwards-fire.com*

EDWARDS is a UTC brand.
1016 Corporate Park Drive
Mebane, NC 27302

© 2016 United Technologies Corporation.
All rights reserved.

# Ordering Information

28 31 01

| Part | Description |
|---|---|
| **iO1000 Fire Alarm Systems** | |
| IO1000G | Four loop system with one 250-point loop installed. 110v, gray door. |
| IO1000G-2 | Four loop system with one 250-point loop installed. 230v, gray door. |
| IO1000G-2-PG | Four loop system with one 250-point loop installed. 230v, gray door, Portuguese. |
| IO1000G-2-SP | Four loop system with one 250-point loop installed. 230v, gray door, Spanish. |
| IO1000G-CA | Four loop system, one 250-point loop installed. 110v, gray door, LED strips, Canada. |
| IO1000GD | Four loop system, one 250-point loop installed. 110v, gray door, with dialer. |
| IO1000G-F | Four loop system, one 250-point loop. 110v, gray door, LED strips, French Canada. |
| IO1000G-PG | Four loop system with one 250-point loop installed. 110v, gray door, Portuguese. |
| IO1000G-SP | Four loop system with one 250-point loop installed. 110v, gray door, Spanish. |
| IO1000R | Four loop system with one 250-point loop installed. 110v, red door. |
| IO1000R-2 | Four loop system with one 250-point loop installed. 230v, red door. |
| IO1000RD | Four loop system, one 250-point loop installed. 110v, red door, with dialer. |
| SA-TRIM2 | iO1000 Flush mount trim, black. |
| **iO64 Fire Alarm Systems** | |
| IO64G | One loop system with one 64-point loop installed. 110v, gray door. |
| IO64G-2 | One loop system with one 64-point loop installed. 230v, gray door. |
| IO64G-2-PG | One loop system with one 64-point loop installed. 230v, gray door, Portuguese. |
| IO64G-2-SP | One loop system with one 64-point loop installed. 230v, gray door, Spanish. |
| IO64GD | One loop system, one 64-point loop installed. 110v, gray door, with dialer. |
| IO64GL | One loop system, one 64-point loop installed. 110v, gray door, English Canada. |
| IO64GL-F | One loop system, one 64-point loop installed. 110v, gray door, French Canada. |
| IO64G-PG | One loop system with one 64-point loop installed. 110v, gray door, Portuguese. |
| IO64G-SP | One loop system with one 64-point loop installed. 110v, gray door, Spanish. |
| IO64R | One loop system with one 64-point loop installed. 110v, red door. |
| IO64R-2 | One loop system with one 64-point loop installed. 230v, red door. |
| IO64RD | One loop system, one 64-point loop installed. 110v, red door, with dialer. |
| SA-TRIM1 | iO64 Flush mount trim, black |
| **Option Cards** | |
| iO-SDC1 | Expansion module, one 250-device loop. |
| iO-SDC2 | Expansion module, two 250-device loops, 500 devices total. For iO1000 only. |
| RZI16-2 | Remote Zone Interface Module. 16 Class B IDCs, 2 Class B Output. Includes bracket. |
| SA-DACT | Dual Line Dialer/Modem, supports Contact ID, mounts in cabinet on base plate. |
| SA-232 | RS-232 Serial Port for connection to printers & computers, mounts in cabinet. |
| SA-ETH | Ethernet Port, Slave, mounts in cabinet on base plate. |
| SA-CLA | Class A adapter module. Provides Class A capacity on NACs. Mounts in cabinet on main board. iO64 systems only. |
| D16L-iO-2 | LED Annunciator module, 16 X 2-LED zones (4 programmable for sup). Mounts in cabinet to right of LCD display for zones 17-32. For iO1000 only. |
| D16L-iO-1 | LED Annunciator module, 16 X 2-LED zones (4 programmable for sup). Mounts in cabinet to left of LCD display for zones 1-16. For iO1000 only. |
| D8RY-iO-2 | ***Canada only:*** LED Annunciator module, two LEDs per zone, 16 zones (4 alarm only, 8 supervisory only, 4 alarm or supervisory). Mounts in cabinet. For iO1000 only. |
| D8RY-iO-1 | ***Canada only:*** LED Annunciator module, two LEDs per zone, 16 zones (4 alarm only, 8 supervisory only, 4 alarm or supervisory). Mounts in cabinet. For iO1000 only. |
| **Accessories** | |
| CTM | City Tie Module. 2-gang. Connection to a local energy fire alarm box. |
| MFC-A | Multifunction Fire Cabinet, 8" x 14" x 3.5" - red. |
| SIGA-REL | Releasing Module |
| PT-1S | System Printer |
| BC-1 | Battery Cabinet. 14.0" x 18.25" x 7.25". Holds two 12V24A batteries. |
| BC-1R | Battery Cabinet - Red. 14.0" x 18.25" x 7.25". Holds two 12V24A batteries. |
| BC-1EQ | Seismic hardening Kit for iO series panels. Includes battery hardening for BC-1 enclosure and components to harden panel internal components. |
| **Programming Tools** | |
| iO-CU | IO Series configuration and diagnostics utility. |
| 260097 | RS232 cable, 4 conductor, DB9 PC interface |

EDWARDS
United Technologies
LIFE SAFETY & INCIDENT MANAGEMENT

28 31 01

# Intelligent Heat Detector

## SIGA-HRD



S853

## Overview

The SIGA-HRD is an intelligent fixed temperature/rate-of-rise fire detector. It monitors the temperature of the surrounding air and analyzes the data from the sensor to determine whether to initiate an alarm. The rate-of-rise heat function quickly detects a fast, flaming fire. The fixed-temperature heat function detects fire when the air temperature near the detector exceeds the alarm point.

The SIGA-HRD brings advanced sensing technology to a practical design that increases efficiency, saves installation time, cuts costs, and extends property protection capabilities. Continuous self-diagnostics ensures reliability over the long-haul, while the latest thermister technology makes these detectors ideal whereever dependable heat detection is required.

## Standard Features

***Note:*** *Some features described here may not be supported by all control systems. Check your control panel's Installation and Operation Guide for details.*

- Next Generation Heat Sensing Technology
- 15 °F (9 °C) per minute rate-of-rise alarm point
- 135 °F (57 °C) fixed temperature alarm point
- Uses existing wiring
- Automatic device mapping
- Sensor Markings Provide Easy Testing Identification
- Up To 250 Total Signature Devices Per Loop
- Non-volatile memory
- Electronic addressing
- Bicolor (green/red) status LED
- Standard, relay, fault isolator, and audible mounting bases
- 50 foot (15.2 meter) spacing

Provide detectors approved for the location in which they are installed as per the electrical drawings.

STANTEC PROJECT #: 110126045

SUBMITTAL # ELE-002 Fire Alarm Systems

This review by Stantec is for general conformance with the design concept of Stantec's design of the:

☐ Architectural ☐ Structural ☐ Mechanical ☑ Electrical ☐ Other

component(s) only and does not mean that Stantec has verified or approves the shop drawing(s). The Contractor remains solely responsible for the shop drawing(s) and this review by Stantec does not relieve the Contractor of the Contractor's responsibility for errors or omissions in the shop drawing(s) or for meeting all requirements of the contract documents. This review does not mean that Stantec approves the detailed design inherent in the shop drawing, responsibility for which shall remain with the Contractor submitting same, nor does this review mean that Stantec accepts any deviation of the shop drawing(s) from the contract documents. The Contractor is responsible for confirming all dimensions and correlating them at the job site, for all construction means, methods and techniques, and for coordination of construction work of all trades, including coordination of all shop drawings.

Stantec

☐ REVIEWED
☑ REVIEWED, AS NOTED
☐ REVISE AND RESUBMIT
☐ NOT REVIEWED

DATE June 20, 2018

BY Chester Martinez, E.I.T.

## Application

The SIGA-HRD combination fixed temperature/rate-of-rise heat detector provides a 15 °F (9 °C) per minute rate-of-rise heat sensor for the detection of fast-developing fires, as well as a 135°F (57°C) fixed temperature sensor for slow building-fires. The heat sensor monitors the temperature of the air and determines whether an alarm should be initiated.

## Compatibility

The SIGA-HRD detector is compatible only with the Signature Loop Controller.

## Installation

Signature Series detectors mount to North American 1-gang boxes, 3-1/2 inch or 4 inch octagon boxes, and to 4 inch square electrical boxes 1-1/2 inches (38 mm) deep. They mount to European BESA and 1-gang boxes with 60.3 mm fixing centers. See mounting base installation and wiring for more information.

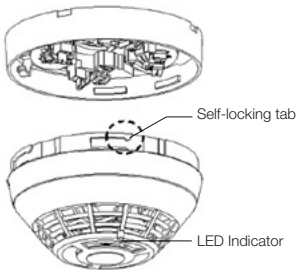


## Sensing and reporting technology

The microprocessor in each detector provides additional benefits - Self-diagnostics and History Log, Automatic Device Mapping, and Fast, Stable Communication.

**Self-diagnostics and History Log** - Each Signature Series detector constantly runs self-checks to provide important maintenance information. The results of the self-check are automatically updated and permanently stored in the detector's non-volatile memory.

**Automatic Device Mapping** - The loop controller learns where each device's serial number address is installed relative to other devices on the circuit. The mapping feature provides supervision of each device's installed location to prevent a detector from being reinstalled (after cleaning etc.) in a different location from where it was originally.

**Fast Stable Communication** - On-board intelligence means less information needs to be sent between the detector and the loop controller. Other than regular supervisory polling response, the detector only needs to communicate with the loop controller when it has something new to report.

## Accessories 28 31 01

**Detector mounting bases** have wiring terminals that are accessible from the "room-side" after mounting the base to the electrical box. The bases mount to North American 1-gang boxes and to 3½ inch or 4 inch octagon boxes, 1½ inches (38 mm) deep. They also mount to European BESA and 1-gang boxes with 60.3 mm fixing centers. The SIGA-SB4, SIGA-RB4, and SIGA-IB4 mount to North American 4 inch sq. electrical boxes in addition to the above boxes. They include the SIGA-TS4 Trim Skirt, which is used to cover the "mounting ears" on the base. The SIGA-AB4G mounts to a 4 inch square box only.


**SIGA-AB4G/T/LF**
**Audible Base**


**SIGA-SB**
**Standard Base**


**SIGA-IB**
**Isolator Base**


**SIGA-RB**
**Relay Base**


**SIGA-LED**
**Remote LED**

**Remote LED SIGA-LED** - The remote LED connects to the SIGA-SB or SIGA-SB4 Standard Base only. It features a North American size 1-gang plastic faceplate with a white finish and red alarm LED.

**SIGA-TS4 Trim Skirt** - Supplied with 4 inch bases, it can also be ordered separately to use with the other bases to help hide surface imperfections not covered by the smaller bases.

**Sounder Bases** - Signature Series sounder bases are designed for use where localized or group alarm signaling is required.

- **SIGA-AB4G** bases provide sounder capability to Signature Series to heat and smoke detectors. They are not intended for use with combination carbon monoxide detectors in Fire-plus-CO mode.
- **SIGA-AB4GT** bases provide sounder capability to Signature Series smoke and heat detectors, as well as carbon monoxide detectors when used with a SIGA-TCDR Temporal Pattern Generator.
- **SIGA-AB4G-LF** bases provide 520 Hz low frequency sounder capability to Signature Series smoke and heat detectors, as well as carbon monoxide detectors when used with a SIGA-TCDR Temporal Pattern Generator. The SIGA-AB4G-LF is suitable for applications requiring low frequency audible tones.

## Warnings & Cautions

- This detector does not operate without electrical power. As fires frequently cause power interruption, discuss further safeguards with the local fire protection specialist.
- This detector does not sense fires in areas where heat cannot reach the detector. Heat from fires in walls, roofs, or on the opposite side of closed doors may not reach the detector.
- This heat detector by itself does not provide life safety protection Use this detector with ionization and/or photoelectric smoke detectors.
- This detector does not detect oxygen levels, smoke, toxic gases, or flames. Use this device as part of a broad-based life safety program which includes a variety of information sources pertaining to heat and smoke levels, extinguishment systems, visual and audible devices, and other safety measures.
- Independent studies indicate that heat detectors should only be used when property protection alone is involved. Never rely on heat detectors as the sole means of fire protection.

# Typical Wiring

The detector mounting bases accept #18 AWG (0.75mm$^2$), #16 (1.0mm$^2$), #14 AWG (1.5mm$^2$), and #12 AWG (2.5mm$^2$) wire sizes. Sizes #16 AWG (1.0mm$^2$) and #18 AWG (0.75mm$^2$) are preferred for ease of installation.

## Standard Detector Base, SIGA-SB, SIGA-SB4

This is the basic mounting base for EDWARDS Signature Series detectors. The SIGA-LED Remote LED is supported by this Base.

| Term | Description |
|---|---|
| 1 | Not Used |
| 2 | DATA IN/OUT (+) |
| 3 | Not Used |
| 4 | DATA IN (-) |
| 4 | Remote LED (-) |
| 5 | Remote LED (+) |
| 6 | Not Used |
| 7 | DATA OUT (-) |

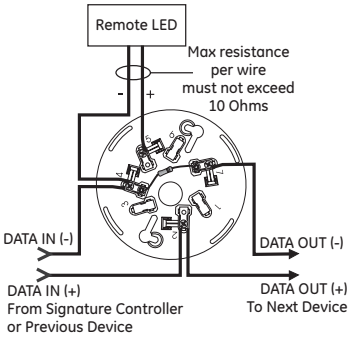


## Isolator Detector Base, SIGA-IB, SIGA-IB4

This base includes a built-in line fault isolator for use on Class A circuits. A detector must be installed for it to operate. The isolator base does not support the SIGA-LED Remote LED.

The isolator operates as follows:

- a short on the line causes all isolators to open within 23 msec
- at 10 msec intervals, beginning on one side of the Class A circuit nearest the loop controller, the isolators close to provide the next isolator down the line with power
- when the isolator next to the short closes, it reopens within 10 msec.

The process repeats beginning on the other side of the loop controller.

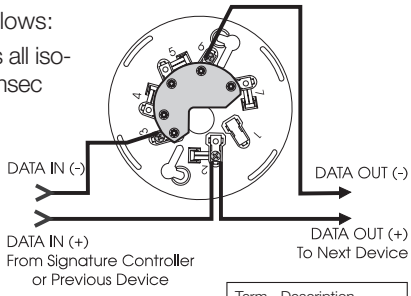


| Term | Description |
|---|---|
| 1 | Not Used |
| 2 | DATA IN/OUT (+) |
| 3 | DATA IN (-) |
| 4 | Not Used |
| 5 | Not Used |
| 6 | DATA OUT (-) |
| 7 | Not Used |

28 31 01

## Relay Detector Base, SIGA-RB, SIGA-RB4

This base includes a relay. Normally Open or Normally Closed operation is selected during installation. The dry contact is rated for 1 amp (pilot duty) @ 30 Vdc. The relay's position is supervised to avoid accidentally jarring it out of position. The SIGA-RB can be operated as a control relay if programmed to do so at the control panel. The relay base does not support the SIGA-LED Remote LED.

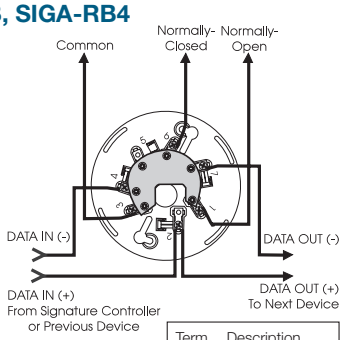


CONTACT RATING
1.0 Amp @ 30 VDC
(Pilot Duty)

| Term | Description |
|---|---|
| 1 | Normally Open |
| 2 | DATA IN/OUT (+) |
| 3 | Common |
| 4 | DATA IN (-) |
| 5 | Not Used |
| 6 | Normally-Closed |
| 7 | DATA OUT (-) |

## Audible Sounder Bases, Fire Mode

*AB4GT, AB4G, AB4G-LF sounder bases*

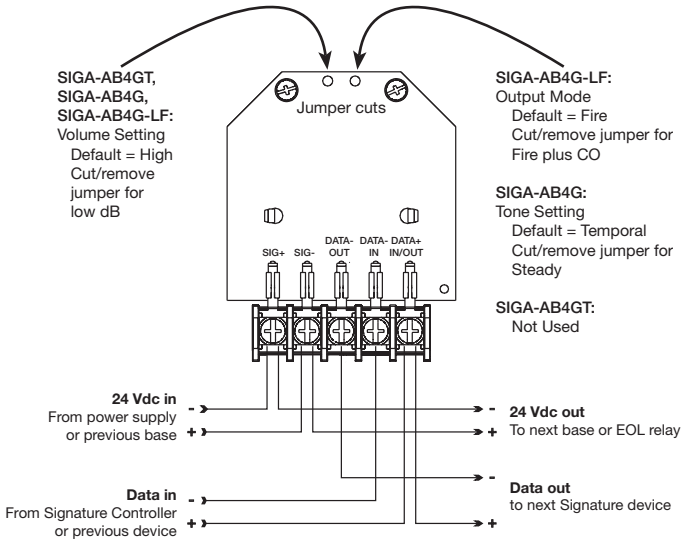

28 31 01

## Dimensions

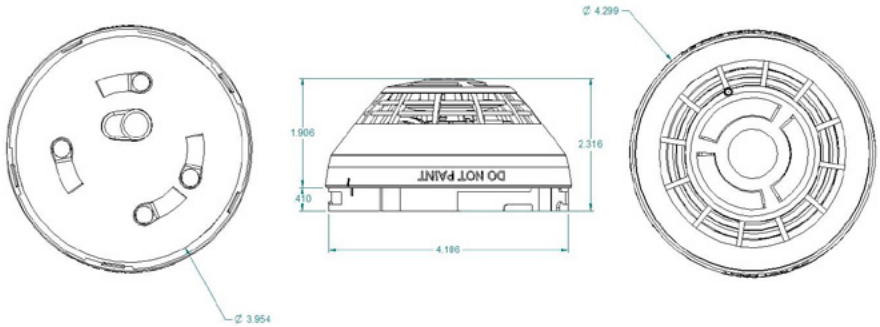


## Specifications

| | |
|---|---|
| Operating voltage | 15.20 to 19.95 VDC |
| Normal operating current | 32 µA |
| Alarm current | 32 µA |
| Vibration level | 10 to 35 Hz, with an amplitude of 0.01 in. |
| Rate-of-rise rating | 15°F/min (8°C/min) |
| Fixed temperature rating | 135°F (57.2°C). Actual alarm point 129 to 141°F (53.9 to 60.6°C). |
| Maximum spacing | 50 ft. (15.2 m) centers |
| Compatible bases | See Ordering Information |
| Compatible detector testers | Testifire 1000, Testifire 2000 |
| Operating environment | 32 to 100°F (0 to 38°C), 0 to 93% RH, noncondensing |
| Construction | High Impact Engineering Polymer, White |
| Storage temperature | -4 to 140°F (-20 to 60°C) |
| Agency Listings | CAN/ULC-S530, UL 521 |

## Ordering Information

| | Catalog Number | Description | Ship Wt. lbs (kg) |
|---|---|---|---|
| ★ | SIGA-HRD | Intelligent fixed temperature/Rate-of-rise heat detector | 0.4 (0.16) |
| | **Compatible Bases** | | |
| ★ | SIGA-SB | Detector Mounting Base - Standard | |
| | SIGA-SB4 | 4-inch Detector Mounting Base c/w Trim Skirt | |
| | SIGA-RB | Detector Mounting Base w/Relay | |
| | SIGA-RB4 | 4-inch Detector Mounting Base w/Relay, c/w Trim Skirt | 0.2 (.09) |
| | SIGA-IB | Detector Mounting Base w/Fault Isolator | |
| | SIGA-IB4 | 4-inch Detector Mounting Base w/ Fault Isolator, c/w Trim Skirt | |
| | SIGA-LED | Remote Alarm LED (not for EN54 applications) | |
| | SIGA-AB4G | Audible (Sounder) Base for Fire Detectors | 0.3 (0.15) |
| | SIGA-AB4G-LF | Low Frequency Audible (Sounder) Base for CO and Fire Detectors | 0.3 (0.15) |
| | SIGA-AB4GT | Audible (Sounder) Base for CO and Fire Detectors | 0.3 (0.15) |
| | SIGA-TS4 | Trim Skirt (supplied with 4-inch bases) | 0.1 (0.04) |
| | SIGA-TS | Trim Skirt - (optional for non 4-inch bases) | 0.1 (0.04) |
| | SIGA-DMP | Detector Mounting Plate | 3.0 (1.4) |
| | SIGA-RTA | Detector Removal Tool | |


LIFE SAFETY & INCIDENT MANAGEMENT

Contact us...

Email: edwards.fire@fs.utc.com
Web: *Edwards-fire.com*

EDWARDS is a UTC brand.
1016 Corporate Park Drive
Mebane, NC 27302



© 2016 United Technologies Corporation.
All rights reserved.

28 31 01

LIFE SAFETY & INCIDENT MANAGEMENT

# Intelligent Smoke Detector

## SIGA-PD



S853

## Overview

The Signature Series SIGA-PD optical smoke detector brings advanced sensing technology to a practical design that increases efficiency, saves installation time, cuts costs, and extends life safety and property protection capabilities. Continuous self-diagnostics ensure reliability over the long-haul, while environmental compensation helps reduce maintenance costs.

Like all Signature Series detectors, the SIGA-PD is an intelligent device that gathers analog information from its optical sensor, converting this data into digital signals. To make an alarm decision, the detector's on-board microprocessor measures and analyzes sensor readings and compares this information to historical data. Digital filters remove signal patterns that are not typical of fires, thus virtually eliminating unwanted alarms.

## Standard Features

***Note:*** *Some features described here may not be supported by all control systems. Check your control panel's Installation and Operation Guide for details.*

- Next Generation Optical Smoke Sensing Technology
- Wide 0.53 to 3.94 %/ft. (1.7 to 12.35 %/m) smoke obscuration
- Uses Existing Wiring
- Automatic Device Mapping
- Up To 250 Total Signature Addresses Per Loop
- Two Levels of Environmental Compensation
- Two Levels of Dirty Detector Warning
- Twenty Pre-Alarm Settings
- Five Sensitivity Settings
- Non-Volatile Memory
- Electronic Addressing
- Identification of Dirty or Defective Detectors
- Automatic Day/Night Sensitivity Adjustment
- Bicolor (Green/Red) Status Led
- Standard, Relay, Fault Isolator, and Audible Mounting Bases
- Sensor Markings Provide Easy Testing Identification

Provide detectors approved for the location in which they are installed as per the electrical drawings.

STANTEC PROJECT #: 110126045

This review by Stantec is for general conformance with the design concept of Stantec's design of the:

☐ Architectural ☑ Electrical
☐ Structural ☐ Other
☐ Mechanical

component(s) only and does not mean that Stantec has verified or approves the shop drawing(s). The Contractor remains solely responsible for the shop drawing(s) and this review by Stantec does not relieve the Contractor of the Contractor's responsibility for errors or omissions in the shop drawing(s) or for meeting all requirements of the contract documents. This review does not mean that Stantec approves the detailed design inherent in the shop drawing, responsibility for which shall remain with the Contractor submitting same, nor does this review mean that Stantec accepts any deviation of the shop drawing(s) from the contract documents. The Contractor is responsible for confirming all dimensions and correlating them at the job site, for all construction means, methods and techniques, and for coordination of construction work of all trades, including coordination of all shop drawings.

SUBMITTAL # ELE-002 Fire Alarm Systems

Stantec

☐ REVIEWED
☑ REVIEWED, AS NOTED
☐ REVISE AND RESUBMIT
☐ NOT REVIEWED

DATE June 20, 2018

BY Chester Martinez, E.I.T.

## Application

The SIGA-PD detects extremely small particles of combustion and triggers an alarm at the first sign of smoke. Thanks to its high-performance forward-scattering reflective response technology, the photoelectric smoke sensor responds quickly and reliably to a wide range of fire types, especially slow burning fires fuelled by combustibles typically found in modern multi-use buildings.

## Compatibility

The SIGA-PD detector is compatible only with the Signature Loop Controller.

## Installation

Signature Series detectors mount to North American 1-gang boxes, 3-1/2 inch or 4 inch octagon boxes, and to 4 inch square electrical boxes 1-1/2 inches (38 mm) deep. They mount to European BESA and 1-gang boxes with 60.3 mm fixing centers. See mounting base installation and wiring for more information.

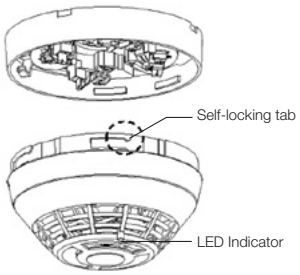


## Sensing and reporting technology

The microprocessor in each detector provides additional benefits - Self-diagnostics and History Log, Automatic Device Mapping, and Fast, Stable Communication.

**Self-diagnostics and History Log** - Each Signature Series detector constantly runs self-checks to provide important maintenance information. The results of the self-check are automatically updated and permanently stored in the detector's non-volatile memory

**Automatic Device Mapping** - The loop controller learns where each device's serial number address is installed relative to other devices on the circuit. The mapping feature provides supervision of each device's installed location to prevent a detector from being reinstalled (after cleaning etc.) in a different location from where it was originally.

**Fast Stable Communication** - On-board intelligence means less information needs to be sent between the detector and the loop controller. Other than regular supervisory polling response, the detector only needs to communicate with the loop controller when it has something new to report.

## Testing & Maintenance 28 31 01

Each detector automatically identifies when it is dirty or defective and causes a "dirty detector" message. The detector's sensitivity measurement can also be transmitted to the loop controller. A sensitivity report may be printed to satisfy NFPA sensitivity measurements, which must be conducted at the end of the first year and every two years thereafter.

The user-friendly maintenance program shows the current state of each detector and other pertinent messages. Single detectors may be turned off temporarily from the control panel. Availability of maintenance features is dependent on the fire alarm system used.

## Accessories

**Detector mounting bases** have wiring terminals that are accessible from the "room-side" after mounting the base to the electrical box. The bases mount to North American 1-gang boxes and to 3½ inch or 4 inch octagon boxes, 1½ inches (38 mm) deep. They also mount to European BESA and 1-gang boxes with 60.3 mm fixing centers. The SIGA-SB4, SIGA-RB4, and SIGA-IB4 mount to North American 4 inch sq. electrical boxes in addition to the above boxes. They include the SIGA-TS4 Trim Skirt, which is used to cover the "mounting ears" on the base. The SIGA-AB4G mounts to a 4 inch square box only.


**SIGA-AB4G/T/LF**
**Audible Base**


**SIGA-SB**
**Standard Base**


**SIGA-IB**
**Isolator Base**


**SIGA-RB**
**Relay Base**


**SIGA-LED**
**Remote LED**

**Remote LED SIGA-LED** - The remote LED connects to the SIGA-SB or SIGA-SB4 Standard Base only. It features a North American size 1-gang plastic faceplate with a white finish and red alarm LED.

**SIGA-TS4 Trim Skirt** - Supplied with 4 inch bases, it can also be ordered separately to use with the other bases to help hide surface imperfections not covered by the smaller bases.

**Sounder Bases** - Signature Series sounder bases are designed for use where localized or group alarm signaling is required.

- **SIGA-AB4G** bases provide sounder capability to Signature Series to heat and smoke detectors. They are not intended for use with combination carbon monoxide detectors in Fireplus-CO mode.
- **SIGA-AB4GT** bases provide sounder capability to Signature Series smoke and heat detectors, as well as carbon monoxide detectors when used with a SIGA-TCDR Temporal Pattern Generator.
- **SIGA-AB4G-LF** bases provide 520 Hz low frequency sounder capability to Signature Series smoke and heat detectors, as well as carbon monoxide detectors when used with a SIGA-TCDR Temporal Pattern Generator. The SIGA-AB4G-LF is suitable for applications requiring low frequency audible tones.

# Typical Wiring

The detector mounting bases accept #18 AWG (0.75mm$^2$), #16 (1.0mm$^2$), #14 AWG (1.5mm$^2$), and #12 AWG (2.5mm$^2$) wire sizes. Sizes #16 AWG (1.0mm$^2$) and #18 AWG (0.75mm$^2$) are preferred for ease of installation.

## Standard Detector Base, SIGA-SB, SIGA-SB4

This is the basic mounting base for EDWARDS Signature Series detectors. The SIGA-LED Remote LED is supported by this Base.

| Term | Description |
|---|---|
| 1 | Not Used |
| 2 | DATA IN/OUT (+) |
| 3 | Not Used |
| 4 | DATA IN (-) |
| 4 | Remote LED (-) |
| 5 | Remote LED (+) |
| 6 | Not Used |
| 7 | DATA OUT (-) |

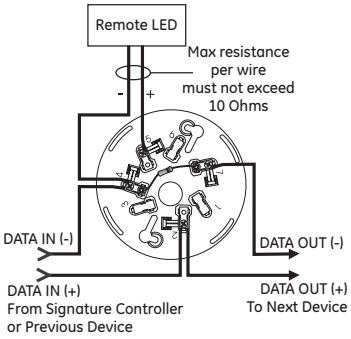


## Isolator Detector Base, SIGA-IB, SIGA-IB4

This base includes a built-in line fault isolator for use on Class A circuits. A detector must be installed for it to operate. The isolator base does not support the SIGA-LED Remote LED.

The isolator operates as follows:

- a short on the line causes all isolators to open within 23 msec
- at 10 msec intervals, beginning on one side of the Class A circuit nearest the loop controller, the isolators close to provide the next isolator down the line with power
- when the isolator next to the short closes, it reopens within 10 msec.

The process repeats beginning on the other side of the loop controller.

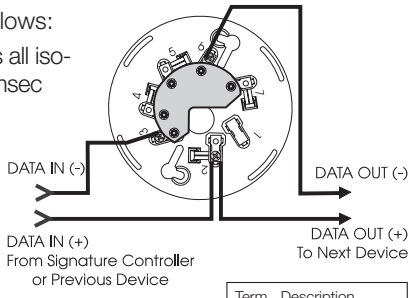


| Term | Description |
|---|---|
| 1 | Not Used |
| 2 | DATA IN/OUT (+) |
| 3 | DATA IN (-) |
| 4 | Not Used |
| 5 | Not Used |
| 6 | DATA OUT (-) |
| 7 | Not Used |

## Relay Detector Base, SIGA-RB, SIGA-RB4

This base includes a relay. Normally Open or Normally Closed operation is selected during installation. The dry contact is rated for 1 amp (pilot duty) @ 30 Vdc. The relay's position is supervised to avoid accidentally jarring it out of position. The SIGA-RB can be operated as a control relay if programmed to do so at the control panel. The relay base does not support the SIGA-LED Remote LED.

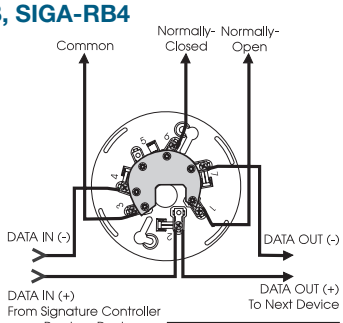


CONTACT RATING
1.0 Amp @ 30 VDC
(Pilot Duty)

| Term | Description |
|---|---|
| 1 | Normally Open |
| 2 | DATA IN/OUT (+) |
| 3 | Common |
| 4 | DATA IN (-) |
| 5 | Not Used |
| 6 | Normally-Closed |
| 7 | DATA OUT (-) |

28 31 01

## Audible Sounder Bases, Fire Mode

*AB4GT, AB4G, AB4G-LF sounder bases*

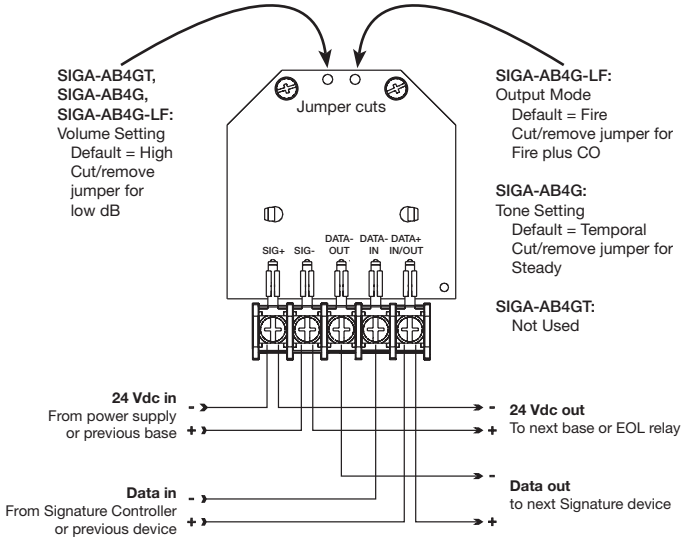


# Warnings & Cautions

- This detector does not operate without electrical power. As fires frequently cause power interruption, discuss further safeguards with the local fire protection specialist.
- This detector does not sense fires in areas where smoke cannot reach the detector. Smoke from fires in walls, roofs, or on the opposite side of closed doors may not reach the detector.
- Photoelectric detectors have a wide range of fire-sensing capabilities and are best suited for detecting slow, smoldering fires.
- In Canada, install according to CAN/ULC-S524 Standard for the Installation of Fire Alarm Systems, CSA C22.1 Canadian Electrical Code, and the local authority having jurisdiction.

LIFE SAFETY & INCIDENT MANAGEMENT

Contact us...

Email: edwards.fire@fs.utc.com
Web: *Edwards-fire.com*

EDWARDS is a UTC brand.
1016 Corporate Park Drive
Mebane, NC 27302

© 2016 United Technologies Corporation.
All rights reserved.

## Dimensions

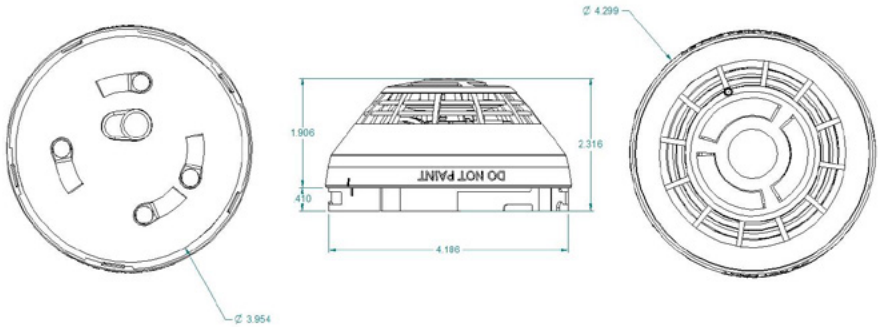


## Specifications

| | |
|---|---|
| Operating voltage | 15.20 to 19.95 VDC |
| Normal operating current | 32 µA |
| Alarm current | 32 µA |
| Smoke Sensitivity Range | UL/ULC: 0.53 to 3.94 %/ft. (1.7 to 12.35 %/m) obscuration |
| Vibration level | 10 to 35 Hz, with an amplitude of 0.01 in. |
| Air velocity | 0 to 4,000 ft./min (0 to 20 m/s) |
| Wall mounting | 12 in. (305 mm) max. from ceiling |
| Compatible bases | See Ordering Information |
| Compatible detector testers | Testifire 1000, Testifire 2000 |
| Operating environment | 32 to 120°F (0 to 49°C), 0 to 93% RH, noncondensing |
| Construction | High Impact Engineering Polymer, White |
| Storage temperature | -4 to 140°F (-20 to 60°C) |
| Environmental compensation | Automatic |
| Agency Listings | CAN/ULC-S529, UL 268, UL 268A |

## Ordering Information

| | Catalog Number | Description | Ship Wt. lbs (kg) |
|---|---|---|---|
| ★ | SIGA-PD | Intelligent Optical Smoke Detector | 0.4 (0.16) |
| | **Accessories** | | |
| ★ | SIGA-SB | Detector Mounting Base - Standard | |
| | SIGA-SB4 | 4-inch Detector Mounting Base c/w Trim Skirt | |
| | SIGA-RB | Detector Mounting Base w/Relay | |
| | SIGA-RB4 | 4-inch Detector Mounting Base w/Relay, c/w Trim Skirt | 0.2 (.09) |
| | SIGA-IB | Detector Mounting Base w/Fault Isolator | |
| | SIGA-IB4 | 4-inch Detector Mounting Base w/ Fault Isolator, c/w Trim Skirt | |
| | SIGA-LED | Remote Alarm LED (not for EN54 applications) | |
| | SIGA-AB4G | Audible (Sounder) Base for Fire Detectors | 0.3 (0.15) |
| | SIGA-AB4G-LF | Low Frequency Audible (Sounder) Base for CO and Fire Detectors | 0.3 (0.15) |
| | SIGA-AB4GT | Audible (Sounder) Base for CO and Fire Detectors | 0.3 (0.15) |
| | SIGA-TS4 | Trim Skirt (supplied with 4-inch bases) | 0.1 (0.04) |
| | SIGA-TS | Trim Skirt - (optional for non 4-inch bases) | 0.1 (0.04) |
| | SIGA-DMP | Detector Mounting Plate | 3.0 (1.4) |
| | SIGA-RTA | Detector Removal Tool | |
| | SIGA-VA | Detector Cleaning Tool | |

EST™
Life Safety & Communications

28 31 01

# Input Modules

## SIGA-CT1, SIGA-CT1HT, SIGA-CT2, SIGA-MCT2

STANTEC PROJECT #: 110126045 SUBMITTAL # ELE-002 Fire Alarm Systems

This review by Stantec is for general conformance with the design concept of Stantec's design of the:

☐ Architectural ☑ Electrical
☐ Structural ☐ Other
☐ Mechanical

component(s) only and does not mean that Stantec has verified or approves the shop drawing(s). The Contractor remains solely responsible for the shop drawing(s) and this review by Stantec does not relieve the Contractor of the Contractor's responsibility for errors or omissions in the shop drawing(s) or for meeting all requirements of the contract documents. This review does not mean that Stantec approves the detailed design inherent in the shop drawing, responsibility for which shall remain with the Contractor submitting same, nor does this review mean that Stantec accepts any deviation of the shop drawing(s) from the contract documents. The Contractor is responsible for confirming all dimensions and correlating them at the job site, for all construction means, methods and techniques, and for coordination of construction work of all trades, including coordination of all shop drawings.

Stantec

☑ REVIEWED
☐ REVIEWED, AS NOTED
☐ REVISE AND RESUBMIT
☐ NOT REVIEWED

DATE June 20, 2018

BY Chester Martinez, E.I.T.


SIGA-MCT2


SIGA-CT1/2

MEA

Application Notes Available

## Overview

The SIGA-CT1 Single Input Module, SIGA-CT1HT High Temperature Single Input Module and SIGA-CT2/SIGA-MCT2 Dual Input Modules are intelligent analog addressable devices used to connect one or two Class B normally-open Alarm, Supervisory, or Monitor type dry contact Initiating Device Circuits (IDC).

The actual function of these modules is determined by the "personality code" selected by the installer. This code is downloaded to the module from the Signature loop controller during system configuration.

The input modules gather analog information from the initiating devices connected to them and convert it into digital signals. The module's on-board microprocessor analyzes the signal and decides whether or not to input an alarm.

**The SIGA-CT1, SIGA-CT1HT and SIGA-CT2** mount to standard North American 1-gang electrical boxes, making them ideal for locations where only one module is required. Separate I/O and data loop connections are made to each module.

The SIGA-CT1HT module operates at an expanded temperature range of 32 ºF to 158 ºF (0 ºC to 70 ºC) for those applications requiring more extreme environmental temperature variation.

**The SIGA-MCT2** is part of the UIO family of plug-in Signature Series modules. It functions identically to the SIGA-CT2, but takes advantage of the modular flexibility and easy installation that characterizes all UIO modules. Two- and six-module UIO motherboards are available. All wiring connections are made to terminal blocks on the motherboard. UIO assemblies may be mounted in Edwards enclosures.

## Standard Features

- **Multiple applications**
  Including Alarm, Alarm with delayed latching (retard) for waterflow applications, Supervisory, and Monitor. The installer selects one of four "personality codes" to be downloaded to the module through the loop controller.
- **SIGA-CT1HT rated for high temperature environments**
  Suitable for attic installation and monitoring high temperature heat detectors.
- **Plug-in (UIO) or standard 1-gang mount**
  UIO versions allow quick installation where multiple modules are required. The 1-gang mount version is ideal for remote locations that require a single module.
- **Automatic device mapping**
  Signature modules transmit information to the loop controller regarding their circuit locations with respect to other Signature devices on the wire loop.
- **Electronic addressing**
  Programmable addresses are downloaded from the loop controller, a PC, or the SIGA-PRO Signature Program/Service Tool. There are no switches or dials to set.
- **Stand-alone operation**
  The module makes decisions and inputs an alarm from initiating devices connected to it even if the loop controller's polling interrogation stops. (Function availability dependent upon control panel.)
- **Ground fault detection by address**
  Detects ground faults right down to the device level.

## Signature Series Overview

The Signature Series intelligent analog-addressable system from Edwards Security is an entire family of multi-sensor detectors and mounting bases, multiple-function input and output modules, network and non-network control panels, and user-friendly maintenance and service tools. Analog information from equipment connected to Signature devices is gathered and converted into digital signals. An onboard microprocessor in each Signature device measures and analyzes the signal and decides whether or not to input an alarm. The microprocessor in each Signature device provides four additional benefits – Self-diagnostics and History Log, Automatic Device Mapping, Stand-alone Operation and Fast, Stable Communication.

**Self-diagnostics and History Log** – Each Signature Series device constantly runs self-checks to provide important maintenance information. The results of the self-check are automatically updated and permanently stored in its non-volatile memory. This information is accessible for review any time at the control panel, PC, or using the SIGA-PRO Signature Program/Service Tool.

**Automatic Device Mapping** –The Signature Data Controller (SDC) learns where each device's serial number address is installed relative to other devices on the circuit. The SDC keeps a map of all Signature Series devices connected to it. The Signature Series Data Entry Program also uses the mapping feature. With interactive menus and graphic support, the wired circuits between each device can be examined. Layout or "as-built" drawing information showing branch wiring (T-taps), device types and their address are stored on disk for printing hard copy.

## Installation

**SIGA-CT1, SIGA-CT1HT and SIGA-CT2:** modules mount to North American 2½ inch(64 mm) deep 1-gang boxes and 1½ inch (38 mm) deep 4 inch square boxes with 1-gang covers and SIGA-MP mounting plates. The terminals are suited for #12 to #18 AWG (2.5 mm$^2$ to 0.75 mm$^2$) wire size.

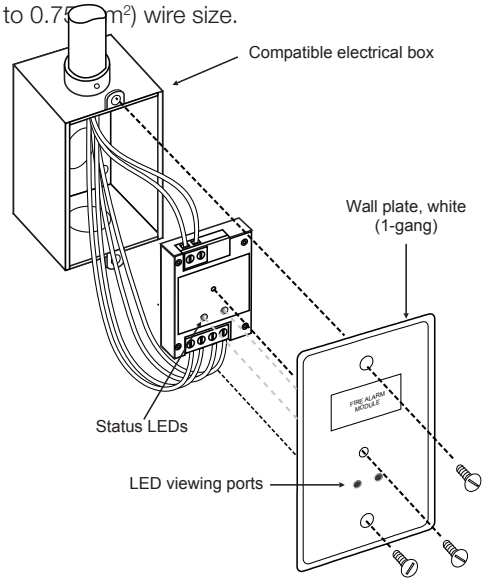


**SIGA-MCT2:** mount the UIO motherboard inside a suitable Edwards enclosure with screws and washers provided. Plug the SIGA-MCT2 into any available position on the motherboard and secure the module to the motherboard with the captive screws. Wiring connections are made to the terminals on the motherboard (see wiring diagram). UIO motherboard terminals are suited for #12 to #18 AWG (2.5 mm$^2$ to 0.75 mm$^2$) wire size.

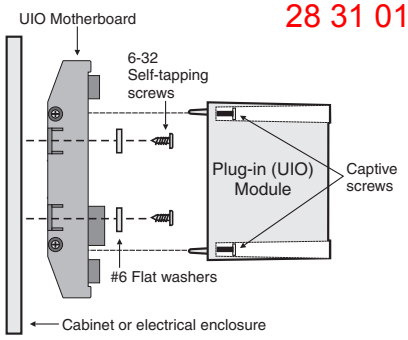


**Electronic Addressing** - The loop controller electronically addresses each module, saving valuable time during system commissioning. Setting complicated switches or dials is not required. Each module has its own unique serial number stored in its on-board memory. The loop controller identifies each device on the loop and assigns a "soft" address to each serial number. If desired, the modules can be addressed using the SIGA-PRO Signature Program/Service Tool.

Edwards recommends that this module be installed according to latest recognized edition of national and local fire alarm codes.

## Application

The duty performed by the SIGA-CT1 and SIGA-CT2/MCT2 is determined by their sub-type code or "Personality Code". The code is selected by the installer depending upon the desired application and is downloaded from the loop controller.

One personality code can be assigned to the SIGA-CT1. Two personality codes can be assigned to the SIGA-CT2/MCT2. Codes 1, 2, 3 and 4 can be mixed on SIGA-CT2/MCT2 modules only. For example, personality code 1 can be assigned to the first address (circuit A) and code 4 can be assigned to the second address (circuit B).

**NORMALLY-OPEN ALARM - LATCHING (Personality Code 1) -** Assign to one or both circuits. Configures either circuit A or B or both for Class B normally open dry contact initiating devices such as Pull Stations, Heat Detectors, etc. An ALARM signal is sent to the loop controller when the input contact is closed. The alarm condition is latched at the module.

**NORMALLY-OPEN ALARM - DELAYED LATCHING (Personality Code 2) -** Assign to one or both circuits. Configures either circuit A or B or both for Class B normally-open dry contact initiating devices such as Waterflow Alarm Switches. An ALARM signal is sent to the loop controller when the input contact is closed for approximately 16 seconds. The alarm condition is latched at the module.

**NORMALLY-OPEN ACTIVE - NON-LATCHING (Personality Code 3) -** Assign to one or both circuits. Configures either circuit A or B or both for Class B normally-open dry contact monitoring input such as from Fans, Dampers, Doors, etc. An ACTIVE signal is sent to the loop controller when the input contact is closed. The active condition is not latched at the module.

**NORMALLY-OPEN ACTIVE - LATCHING (Personality Code 4) -** Assign to one or both circuits. Configures either circuit A or B or both for Class B normally open dry contact monitoring input such as from Supervisory and Tamper Switches. An ACTIVE signal is sent to the loop controller when the input contact is closed. The active condition is latched at the module.

# Typical Wiring

28 31 01

Modules will accept #18 AWG (0.75mm²), #16 (1.0mm²), and #14AWG (1.50mm²), and #12 AWG (2.50mm²) wire sizes.

Note: Sizes #16 AWG (1.0mm²) and #18 AWG (0.75mm²) are preferred for ease of installation. See Signature Loop Controller catalog sheet for detailed wiring requirement specifications.

| Initiating (Slave) Device Circuit Wire Specifications | | |
|---|---|---|
| Maximum Allowable Wire Resistance | 50 ohms (25 ohms per wire) per Circuit | |
| Maximum Allowable Wire Capacitance | 0.1µF per Circuit | |
| For Design Reference: | **Wire Size** | **Maximum Distance to EOLR** |
| | #18 AWG (0.75 mm²) | 4,000 ft (1,219 m) |
| | #16 AWG (1.00 mm²) | |
| | #14 AWG (1.50 mm²) | |
| | #12 AWG (1.50 mm²) | |

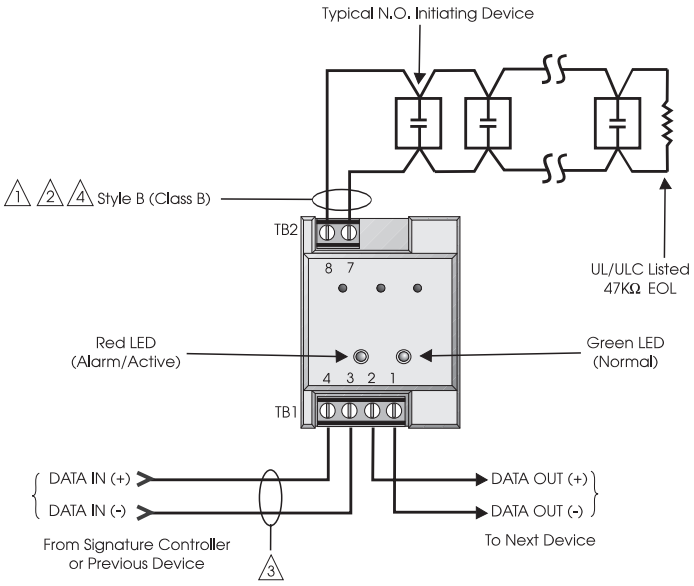


SIGA-CT1, SIGA-CT1HT

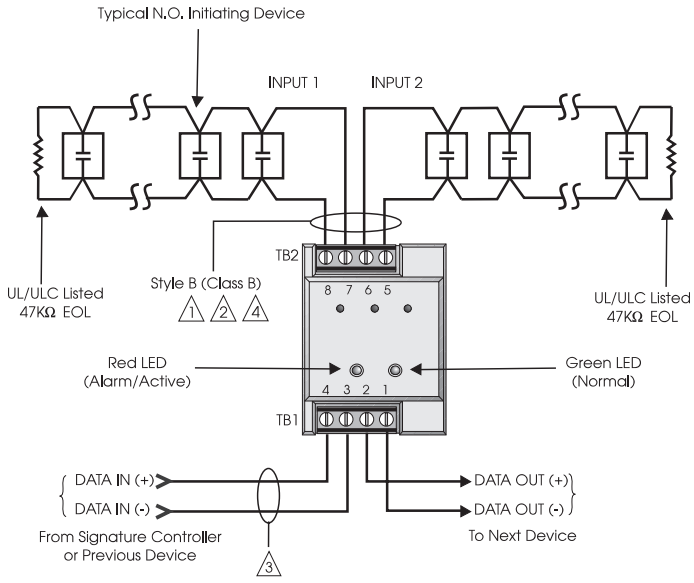


SIGA-CT2

**NOTES**

1. Maximum 25 Ohm resistance per wire.
2. Maximum #12 AWG (2.5 mm² ) wire; Minimum #18 AWG (0.75 mm2).
3. Refer to Signature controller installation sheet for wiring specifications.
4. Maximum 10 Vdc @ 350 µA
5. The SIGA-UIO6R and the SIGA-UIO2R do not come with TB14.
6. All wiring is supervised and power-limited.
7. These modules will not support 2-wire smoke detectors.

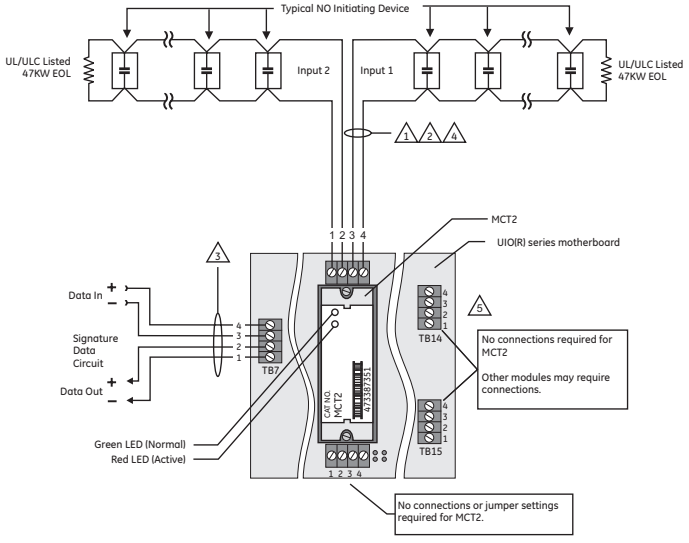


SIGA-MCT2

# Warnings & Cautions

This module will not operate without electrical power. As fires frequently cause power interruption, we suggest you discuss further safeguards with your local fire protection specialist.

# Compatibility

The Signature Series modules are compatible only with EST's Signature Loop Controller.

28 31 01

## Specifications

| Catalog Number | SIGA-CT1HT | SIGA-CT1 | SIGA-CT2 | SIGA-MCT2 |
|---|---|---|---|---|
| Description | Single Input Module | | Dual Input Module | |
| Type Code | 48 (factory set) Four sub-types (personality codes) are available | | 49 (factory set) Four sub-types (personality codes) are available | |
| Address Requirements | Uses One Module Address | | Uses Two Module Addresses | |
| Operating Current | Standby = 250µA; Activated = 400µA | | Standby = 396µA; Activated = 680µA | |
| Operating Voltage | 15.2 to 19.95 Vdc (19 Vdc nominal) | | | |
| Construction | High Impact Engineering Polymer | | | |
| Mounting | North American 2½ inch (64 mm) deep one-gang boxes and 1½ inch (38 mm) deep 4 inch square boxes with one-gang covers and SIGA-MP mounting plates | | | UIO2R/6R/6 Motherboard |
| Operating Environment | 32°F to 158°F (0°C to 70°C) | 32°F to 120°F (0°C to 49°C) | | |
| Storage Environment | -4°F to 140°F (-20°C to 60°C); Humidity: 0 to 93% RH | | | |
| LED Operation | On-board Green LED - Flashes when polled; On-board Red LED - Flashes when in alarm/active. Both LEDs - Glow steady when in alarm (stand-alone) | | | |
| Compatibility | Use with Signature Loop Controller | | | |
| Agency Listings | UL, ULC, MEA, CSFM | | | |

## Ordering Information

| Catalog Number | Description | Ship Wt. lbs (kg) |
|---|---|---|
| SIGA-CT1 | Single Input Module — UL/ULC Listed | 0.4 (0.15) |
| SIGA-CT1HT | Single Input Module High Teperature Operation UL/ULC Listed | 0.4 (0.15) |
| ★ SIGA-CT2 | Dual Input Module — UL/ULC Listed | 0.4 (0.15) |
| SIGA-MCT2 | Dual Input Plug-in (UIO) Module — UL, ULC Listed | 0.1 (0.05) |

| Related Equipment | | |
|---|---|---|
| 27193-11 | Surface Mount Box - Red, 1-gang | 1.0 (0.6) |
| 27193-16 | Surface Mount Box - White, 1-gang | 1.0 (0.6) |
| SIGA-UIO2R | Universal Input-Output Module Board w/Riser Inputs — Two Module Positions | 0.32 (0.15) |
| SIGA-UIO6R | Universal Input-Output Module Board w/Riser Inputs — Six Module Positions | 0.62 (0.28) |
| SIGA-UIO6 | Universal Input-Output Module Board — Six Module Positions | 0.56 (0.25) |
| MFC-A | Multifunction Fire Cabinet — Red, supports Signature Module Mounting Plates | 7.0 (3.1) |
| SIGA-MB4 | Transponder Mounting Bracket (allows for mounting two 1-gang modules in a 2-gang box) | 0.4 (0.15) |
| SIGA-MP1 | Signature Module Mounting Plate, 1 footprint | 1.5 (0.70) |
| SIGA-MP2 | Signature Module Mounting Plate, 1/2 footprint | 0.5 (0.23) |
| SIGA-MP2L | Signature Module Mounting Plate, 1/2 extended footprint | 1.02 (0.46) |

EDWARDS
A UTC Fire & Security Company

**Detection & alarm since 1872**

**U.S.**
**T 888-378-2329**
**F 866-503-3996**

**Canada**
**Chubb Edwards**
**T 519 376 2430**
**F 519 376 7258**

**Southeast Asia**
**T : +65 6391 9300**
**F : +65 6391 9306**

**India**
**T : +91 80 4344 2000**
**F : +91 80 4344 2050**

**Australia**
**T +61 3 9239 1200**
**F +61 3 9239 1299**

**Europe**
**T +32 2 725 11 20**
**F +32 2 721 86 13**

**Latin America**
**T 305 593 4301**
**F 305 593 4300**

**utcfireandsecurity.com**

**© 2010 UTC Fire & Security.**
**All rights reserved.**

EST™
Life Safety & Communications

28 31 01

# Control Relay Modules

## SIGA-CR, SIGA-MCR, SIGA-CRR, SIGA-MCRR




MEA

## Overview

The Control Relay Module and the Polarity Reversal Relay Module are part of the Signature Series system. They are intelligent analog addressable devices available in either plug-in (UIO) versions, or standard 1-gang mount versions.

**The SIGA-CR/MCR** Control Relay Module provides a Form "C" dry relay contact to control external appliances such as door closers, fans, dampers etc. This device does not provide supervision of the state of the relay contact. Instead, the on-board microprocessor ensures that the relay is in the proper ON/OFF state. Upon command from the loop controller, the SIGA-CR/MCR relay activates the normally open or normally-closed contact.

**The SIGA-CRR/MCRR** Polarity Reversal Relay Module provides a Form "C" dry relay contact to power and activate a series of SIGA-AB4G Audible Sounder Bases. Upon command from the Signature loop controller, the SIGA-CRR reverses the polarity of its 24 Vdc output, thus activating all Sounder Bases on the data loop.

**Standard-mount versions (SIGA-CR and SIGA-CRR)** are installed to standard North American 1-gang electrical boxes, making them ideal for locations where only one module is required. Separate I/O and data loop connections are made to each module.

**Plug-in UIO versions (SIGA-MCR and SIGA-MCRR)** are part of the UIO family of plug-in Signature Series modules. They function identically to the standard mount versions, but take advantage of the modular flexibility and easy installation that characterizes all UIO modules. Two- and six-module UIO motherboards are available. All wiring connections are made to terminal blocks on the motherboard. UIO assemblies may be mounted in Edwards enclosures.

## Standard Features

- **Provides one no/nc contact (SIGA-CR/MCR)**
  Form "C" dry relay contact can be used to control external appliances such as door closers, fans, dampers etc.
- **Allows group operation of sounder bases**
  The SIGA-CRR/MCRR reverses the polarity of its 24 Vdc output, thus activating all Sounder Bases on the data loop.
- **Plug-in (UIO) or standard 1-gang mount**
  UIO versions allow quick installation where multiple modules are required. The 1-gang mount version is ideal for remote locations that require a single module.
- **Automatic device mapping**
  Signature modules transmit information to the loop controller regarding their circuit locations with respect to other Signature devices on the wire loop.
- **Electronic addressing**
  Programmable addresses are downloaded from the loop controller, a PC, or the SIGA-PRO Signature Program/Service Tool; there are no switches or dials to set.
- **Intelligent device with microprocessor**
  All decisions are made at the module to allow lower communication speed with substantially improved control panel response time and less sensitivity to line noise and loop wiring properties; twisted or shielded wire is not required.
- **Ground fault detection by address**
  Detects ground faults right down to the device level.

## Installation

**SIGA-CR and SIGA-CRR:** modules mount to North American 2½ inch (64 mm) deep 1-gang boxes and 1½ inch (38 mm) deep 4 inch square boxes with 1-gang covers and SIGA-MP mounting plates. The terminals are suited for #12 to #18 AWG (2.5 mm$^2$ to 0.75 mm$^2$) wire size.

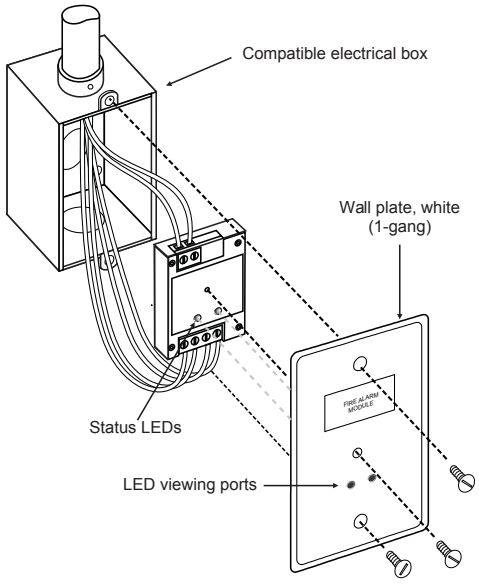


**SIGA-MCR and SIGA-MCRR:** mount the UIO motherboard inside a suitable Edwards enclosure with screws and washers provided. Plug the module into any available position on the motherboard and secure the module to the motherboard with the captive screws. Wiring connections are made to the terminals on the motherboard (see wiring diagram). UIO motherboard terminals are suited for #12 to #18 AWG (2.5 mm$^2$ to 0.75 mm$^2$) wire size.

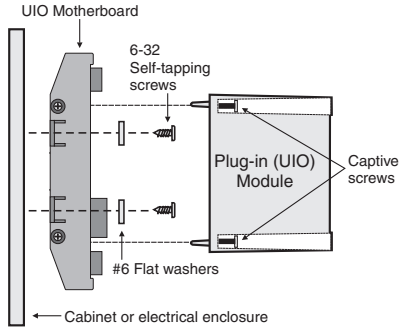


**Electronic Addressing** - The loop controller electronically addresses each module, saving valuable time during system commissioning. Setting complicated switches or dials is not required. Each module has its own unique serial number stored in its onboard memory. The loop controller identifies each device on the loop and assigns a "soft" address to each serial number. If desired, the modules can be addressed using the SIGA-PRO Signature Program/Service Tool.

Edwards recommends that this module be installed according to latest recognized edition of national and local fire alarm codes.

## Application

The operation of Signature Series control relays is determined by their sub-type code or "Personality Code."

**Personality Code 8: CONTROL RELAY (SIGA-CR/MCR) - Dry Contact Output**. This setting configures the module to provide one Form "C" DRY RELAY CONTACT to control Door Closers, Fans, Dampers, etc. Contact rating is 2.0 amp @ 24 Vdc; 0.5 amp @ 120 Vac (or 220 Vac for non-UL applications). Personality Code 8 is assigned at the factory. No user configuration is required.

**Personality Code 8: POLARITY REVERSAL RELAY MODULE (SIGA-CRR/MCRR).** This setting configures the module to reverse the polarity of its 24 Vdc output. Contact rating is 2.0 amp @ 24 Vdc (pilot duty). Personality Code 8 is assigned at the factory. No user configuration is required.

## Compatibility

The Signature Series modules are compatible only with EST's Signature Loop Controller.

## Warnings & Cautions

This module will not operate without electrical power. As fires frequently cause power interruption, we suggest you discuss further safeguards with your local fire protection specialist.

## Testing & Maintenance

The module's automatic self-diagnosis identifies when it is defective and causes a trouble message. The user-friendly maintenance program shows the current state of each module and other pertinent messages. Single modules may be turned off (deactivated) temporarily, from the control panel. Availability of maintenance features is dependent on the fire alarm system used. Scheduled maintenance (Regular or Selected) for proper system operation should be planned to meet the requirements of the Authority Having Jurisdiction (AHJ). Refer to current NFPA 72 and ULC CAN/ULC 536 standards.

# Typical Wiring

Modules will accept #18 AWG (0.75mm²), #16 (1.0mm²), #14 AWG (1.50mm²) and #12 AWG (2.5mm²) wire sizes.

Note: Sizes #16 AWG (1.0mm²) and #18 AWG (0.75mm²) are preferred for ease of installation. See Signature Loop Controller catalog sheet for detailed wiring requirement specifications.

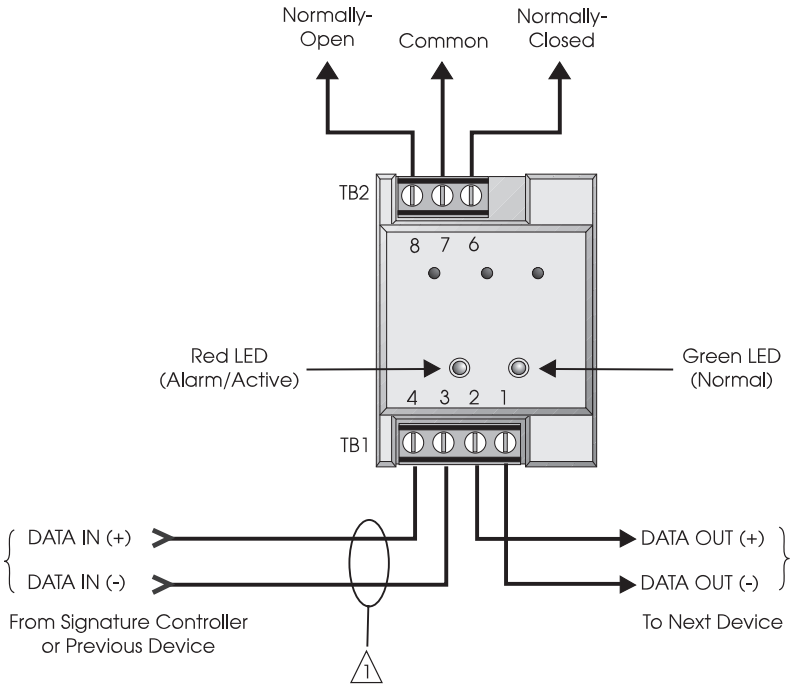


**SIGA-CR Control Relay**

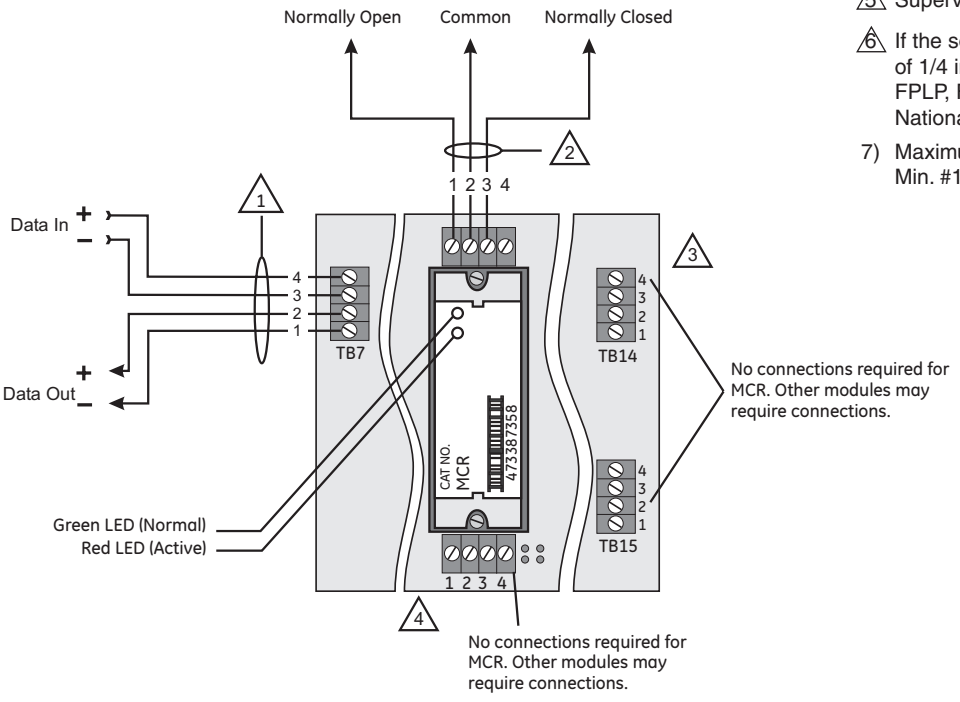


**SIGA-MCR Control Relay**

## Notes

1. Refer to Signature Loop Controller Installation Sheet for wiring specifications.
2. NFPA 72 requires that the SIGA-CR/SIGA-MCR be installed in the same room as the device it is controlling. This requirement may not apply in all markets. Check with your local AHJ for details.
3. The SIGA-UIO6R and the SIGA-UIO2R do not come with TB14.
4. The SIGA-UIO6 does not come with TB8 through TB13.
5. Supervised and power-limited.
6. If the source is nonpower-limited, maintain a space of 1/4 inch from power-limited wiring or use FPL, FPLP, FPLR, or an equivalent in accordance with the National Electrical Code.
7) Maximum #12 AWG (2.5mm²) wire. Min. #18 (0.75mm²).

# Typical Wiring

Modules will accept #18 AWG (0.75mm²), #16 (1.0mm²), #14 AWG (1.50mm²) and #12 AWG (2.50mm²) wire sizes.

Note: Sizes #16 AWG (1.0mm²) and #18 AWG (0.75mm²) are preferred for ease of installation. See Signature Loop Controller catalog sheet for detailed wiring requirement specifications.

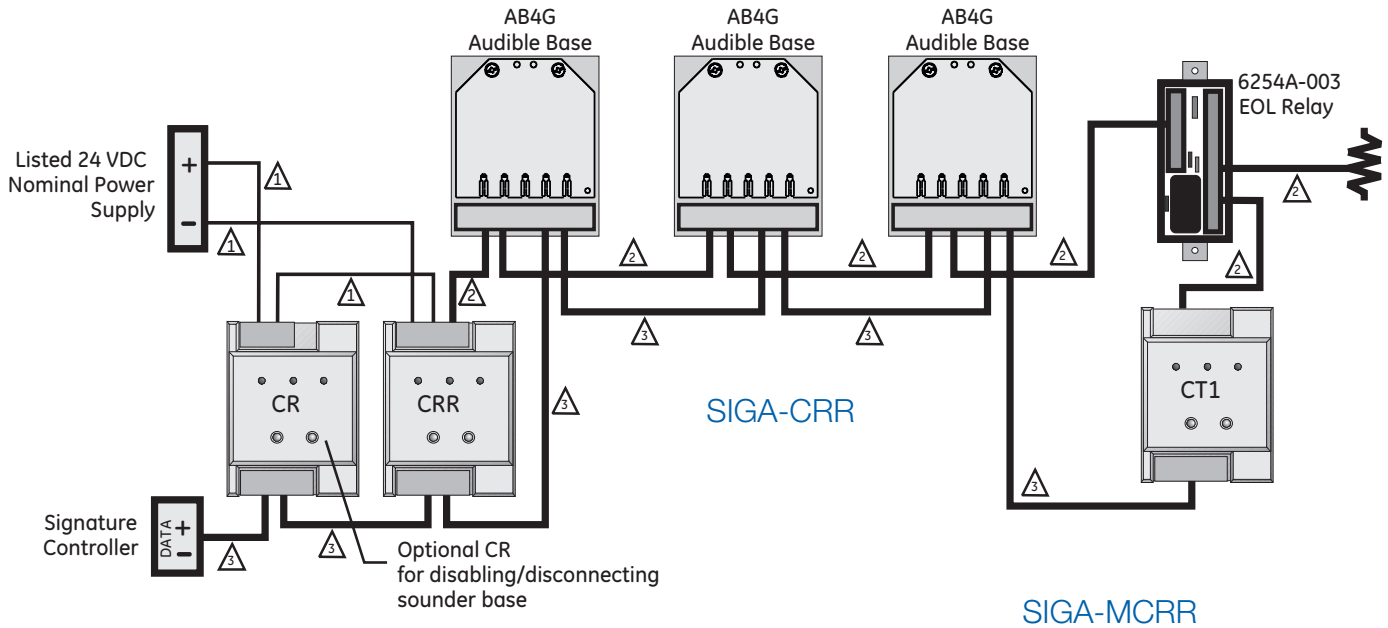


SIGA-MCRR

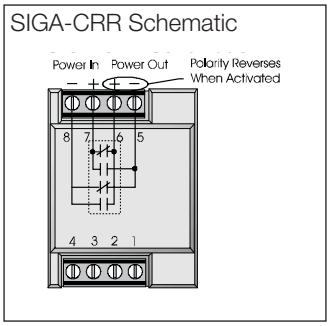


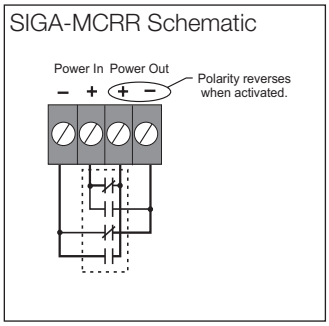


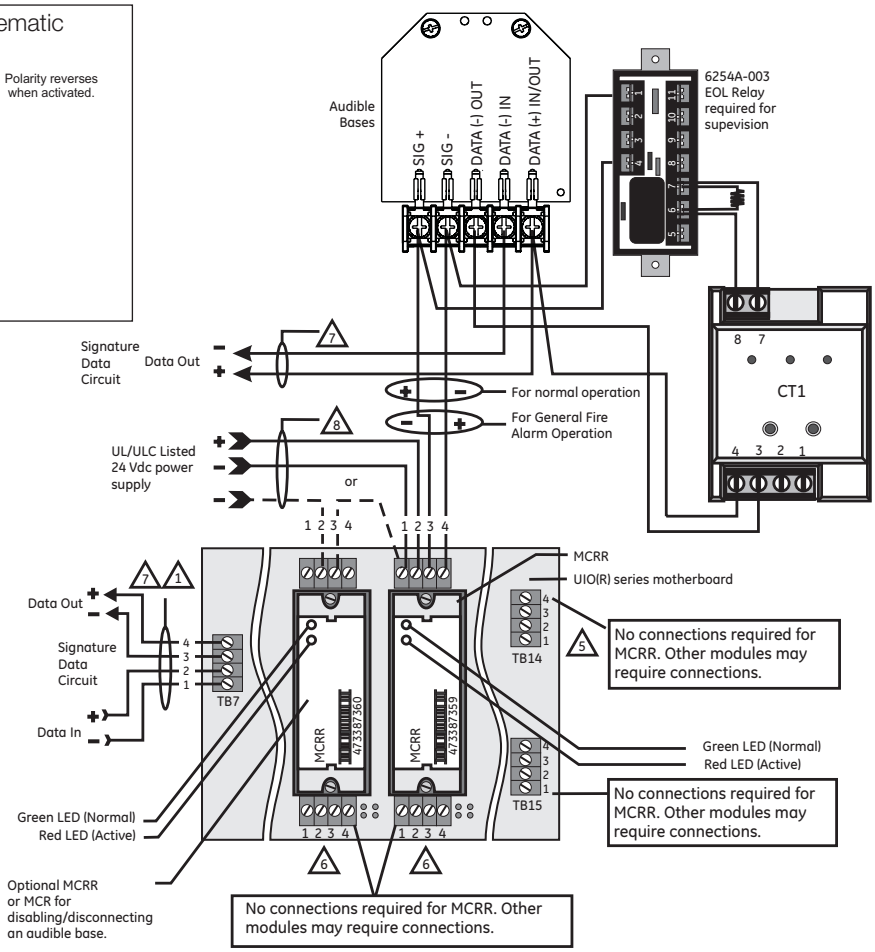


## Notes

1. Refer to the Signature controller installation sheet for wiring.
2. One Pair of Wires (24 Vdc power).
3. One Pair of Wires (Signature Data).
4. Single Wire (24 Vdc power).
5. The SIGA-UIO6R and the SIGA-UIO2R do not come with TB14.
6. The SIGA-UIO6 does not come with TB8 through TB13.
7. Supervised and power-limited.
8. If the source is nonpower-limited, maintain a space of 1/4 inch from power-limited wiring or use FPL, FPLP, FPLR, or an equivalent in accordance with the National Electrical Code.
9. Maximum #12 AWG (2.5 mm² ) wire; Minimum #18 AWG (0.75 mm² ).
10. End-of-Line Relay must monitor and report power supply trouble to control panel.
11. Class B Data wiring may be “T-tapped.”

## Specifications

28 31 01

| Catalog Number | SIGA-CR | SIGA-MCR | SIGA-CRR | SIGA-MCRR |
|---|---|---|---|---|
| Description | Control Relay | | Polarity Reversal Relay | |
| Type Code | Personality Code 8 (Factory Set) | | Personality Code 8 (Factory Set) | |
| Address Requirements | Uses 1 Module Address | | | |
| Operating Current | Standby = 100µA Activated = 100µA | | | |
| Operating Voltage | 15.2 to 19.95 Vdc (19 Vdc nominal) | | | |
| Relay Type and Rating | Form "C" 24 VDC = 2 amps (pilot duty) 120 Vac = 0.5 amps 220 Vac (non-UL) = 0.5 amps | | | |
| Mounting | North American 2½ inch (64 mm) deep 1-gang boxes and 1½ inch (38 mm) deep 4 inch square boxes with 1-gang covers and SIGA-MP mounting plates | Plugs into UIO2R, UIO6R or UIO6 Motherboards | North American 2½ inch (64 mm) deep 1-gang boxes and 1½ inch (38 mm) deep 4 inch square boxes with 1-gang covers and SIGA-MP mounting plates | Plugs into UIO2R, UIO6R or UIO6 Motherboards |
| Construction & Finish | High Impact Engineering Polymer | | | |
| Storage and Operating Environment | Operating Temperature: 32°F to 120°F (0°C to 49°C)<br>Storage Temperature: -4°F to 140°F (-20°C to 60°C) Humidity: 0 to 93% RH | | | |
| LED Operation | On-board Green LED - Flashes when polled On-board Red LED - Flashes when in alarm/active | | | |
| Compatibility | Use With: Signature Loop Controller | | | |
| Agency Listings | UL, ULC, CSFM, MEA | | | |

## Ordering Information

| Catalog Number | Description | Ship Weight - lbs (kg) |
|---|---|---|
| ★ SIGA-CR | Control Relay Module (Standard Mount) | 0.4 (0.15) |
| SIGA-MCR | Control Relay Module (UIO Mount) | 0.18 (0.08) |
| SIGA-CRR | Polarity Reversal Relay Module (Standard Mount) | 0.4 (0.15) |
| SIGA-MCRR | Polarity Reversal Relay Module (UIO Mount) | 0.18 (0.08) |
| **Related Equipment** | | |
| 27193-11 | Surface Mount Box - Red, 1-gang | 1 (0.6) |
| 27193-16 | Surface Mount Box - White, 1-gang | 1 (0.6) |
| SIGA-UIO2R | Universal Input-Output Module Board w/Riser Inputs - Two Module Positions | 0.32 (0.15) |
| SIGA-UIO6R | Universal Input-Output Module Board w/Riser Inputs - Six Module Positions | 0.62 (0.28) |
| SIGA-UIO6 | Universal Input-Output Module Board - Six Module Positions | 0.56 (0.25) |
| SIGA-AB4G | Audible (Sounder) Detector Base | 0.3 (0.15) |
| **Accessories** | | |
| MFC-A | Multifunction Fire Cabinet - Red, supports Signature Module Mounting Plates | 7.0 (3.1) |
| SIGA-MB4 | Transponder Mounting Bracket (allows for mounting two 1-gang modules in a 2-gang box) | 0.4 (0.15) |
| SIGA-MP1 | Signature Module Mounting Plate, 1 footprint | 1.5 (0.70) |
| SIGA-MP2 | Signature Module Mounting Plate, 1/2 footprint | 0.5 (0.23) |
| SIGA-MP2L | Signature Module Mounting Plate, 1/2 extended footprint | 1.02 (0.46) |

EDWARDS
A UTC Fire & Security Company

**Detection & alarm since 1872**

U.S.
T 888-378-2329
F 866-503-3996

Canada
Chubb-Edwards
T 519 376 2430
F 519 376 7258

Southeast Asia
T : +65 6391 9300
F : +65 6391 9306

India
T : +91 80 4344 2000
F : +91 80 4344 2050

Australia
T +61 3 9239 1200
F +61 3 9239 1299

Europe
T +32 2 725 11 20
F +32 2 721 86 13

Latin America
T 305 593 4301
F 305 593 4300

utcfireandsecurity.com

© 2010 UTC Fire & Security.
All rights reserved.

# Signature Series Overview

28 31 01

The Signature Series intelligent analog-addressable system from Edwards is an entire family of multi-sensor detectors and mounting bases, multiple-function input and output modules, network and non-network control panels, and user-friendly maintenance and service tools. Analog information from equipment connected to Signature devices is gathered and converted into digital signals. An onboard microprocessor in each Signature device measures and analyzes the signal and decides whether or not to input an alarm. The microprocessor in each Signature device provides four additional benefits – Self-diagnostics and History Log, Automatic Device Mapping, Stand-alone Operation and Fast, Stable Communication.

**Self-diagnostics and History Log** – Each Signature Series device constantly runs self-checks to provide important maintenance information. The results of the self-check are automatically updated and permanently stored in its non-volatile memory. This information is accessible for review any time at the control panel, PC, or using the SIGA-PRO Signature Program/Service Tool. The information stored in device memory includes:

- Device serial number, address, and type
- Time and date of last alarm
- Most recent trouble code logged by the detector — 32 possible trouble codes may be used to diagnose faults.

**Automatic Device Mapping** –The Signature Data Controller (SDC) learns where each device's serial number address is installed relative to other devices on the circuit. The SDC keeps a map of all Signature Series devices connected to it. The Signature Series Data Entry Program also uses the mapping feature. With interactive menus and graphic support, the wired circuits between each device can be examined. Layout or "as-built" drawing information showing branch wiring (T-taps), device types and their address are stored on disk for printing hard copy. This takes the mystery out of the installation. The preparation of as-built drawings is fast and efficient.

Device mapping allows the Signature Data Controller to discover:

- Unexpected additional device addresses
- Missing device addresses
- Changes to the wiring in the circuit.

Most Signature modules use a personality code selected by the installer to determine their actual function. Personality codes are downloaded from the SDC during system configuration and are indicated during device mapping.

**Standalone Operation** – A decentralized alarm decision by the device is guaranteed. Onboard intelligence permits the device to operate in standalone (degrade) mode. If Signature loop controller CPU communications fail for more than four seconds, all devices on that circuit go into standalone mode. The circuit acts like a conventional alarm receiving circuit. Each Signature device on the circuit continues to collect and analyze information from its slave devices. When connected to a panel utilizing standalone operation, modules with their "personality" set as alarm devices (IDC) will alarm should their slave alarm-initiating device activate.

Life Safety & Communications

28 31 01

# Isolator Module

## SIGA-IM



S3424

7300-1657: 0121

MEA

Application Notes Available

Patented

STANTEC PROJECT #: 110126045

SUBMITTAL # ELE-002 Fire Alarm Systems

This review by Stantec is for general conformance with the design concept of Stantec's design of the:

☐ Architectural ☑ Electrical
☐ Structural ☐ Other
☐ Mechanical

component(s) only and does not mean that Stantec has verified or approves the shop drawing(s). The Contractor remains solely responsible for the shop drawing(s) and this review by Stantec does not relieve the Contractor of the Contractor's responsibility for errors or omissions in the shop drawing(s) or for meeting all requirements of the contract documents. This review does not mean that Stantec approves the detailed design inherent in the shop drawing, responsibility for which shall remain with the Contractor submitting same, nor does this review mean that Stantec accepts any deviation of the shop drawing(s) from the contract documents. The Contractor is responsible for confirming all dimensions and correlating them at the job site, for all construction means, methods and techniques, and for coordination of construction work of all trades, including coordination of all shop drawings.

Stantec

☐ REVIEWED
☑ REVIEWED, AS NOTED
☐ REVISE AND RESUBMIT
☐ NOT REVIEWED

DATE June 20, 2018

BY Chester Martinez, E.I.T.

Provide isolators approved for the location in which they are installed as per the electrical drawings.

## Overview

The SIGA-IM Isolator Module is part of EST's Signature Series system. This intelligent device enables part of the Signature data loop to continue operating should a short circuit occur. The module can be wired into a Class A data loop at any point.

If a fault occurs, the isolator cuts power to all devices beyond the isolator on the loop as follows:

- a short on the line causes all isolators to open within 23 msec.
- at 10 msec intervals, beginning on one side of the Class A circuit nearest the loop controller, the isolators close to provide the next isolator down the line with power.
- when the isolator next to the short closes, it reopens within 10 msec.

Once activated, the line fault isolator continuously checks the faulted side of the loop to determine if the short still exists. When the fault is corrected and system reset, the module automatically restores the entire data loop to the normal condition.

The microprocessor in every Signature module provides at least three important benefits — Self-diagnostics and History Log, Automatic Device Mapping, and Fast, Stable Communication.

**Self-diagnostics and History Log** - Each Signature Series module constantly runs self-checks to provide important maintenance information. This information is automatically updated and permanently stored in the module's non-volatile memory and is accessible for review any time using the SIGA-PRO Signature Program / Service Tool.

**Automatic Device Mapping** - The Signature loop controller learns keeps a map where each device's serial number address is installed relative to other devices on the data circuit.

**Fast Stable Communication** - Built-in intelligence means less information needs to be sent between the module and the loop controller. Other than regular supervisory polling response, the module only needs to communicate with the loop controller when it has something new to report.

## Standard Features

- **Automatic device mapping**
  Each module transmits wiring information to the loop controller regarding its location with respect to other devices on the circuit.
- **Electronic addressing**
  Addresses are downloaded and permanently stored from a PC, or the SIGA-PRO Signature Program / Service Tool. There are no switches or dials to set.
- **Ground fault detection by address**
  Detects ground faults right down to the device level.
- **2-gang mounting**
- **Designed to ISO 9001 standards**

## Testing & Maintenance

The module's automatic self-diagnosis identifies when it is defective and causes a trouble message. The user-friendly maintenance program shows the current state of each module and other pertinent messages. Single modules may be turned off (deactivated) temporarily, from the control panel. Availability of maintenance features is dependent on the fire alarm system used. Scheduled maintenance (Regular or Selected) for proper system operation should be planned to meet the requirements of the Authority Having Jurisdiction (AHJ). Refer to current NFPA 72 and ULC CAN/ ULC 536 standards.

**Warnings & Cautions**
This module will not operate without electrical power. As fires frequently cause power interruption, we suggest you discuss further safeguardwith your fire protection specialist.

## Typical Wiring and Installation

The SIGA-IM module mounts to North American 2-1/2 inch (64 mm) deep 2-gang boxes and 1-1/2 inch (38 mm) deep 4 inch square boxes with 2 gang covers and SIGA-MP mounting plates. The module will accept #18 AWG (0.75mm$^2$), #16 (1.0mm$^2$), #14 AWG (1.50mm$^2$), and #12 AWG (2.50mm$^2$) wire sizes. *Note: Sizes #16 AWG (1.0mm$^2$) and #18 AWG (0.75mm$^2$) are preferred for ease of installation. See Signature Loop Controller catalog sheet for detailed wiring requirement specifications.*

Edwards recommends that this module be installed according to latest recognized edition of national and local fire alarm codes.

## Application

**This module should only be used on Class A circuits.** The operation of the SIGA-IM is determined by its hardware type code and is assigned at the factory. No user configuration is required.

## Compatibility

These modules are part of EST's Signature Series intelligent processing and control platform. They are compatible with EST3, EST3X and iO Series control panels.

## Typical Wiring

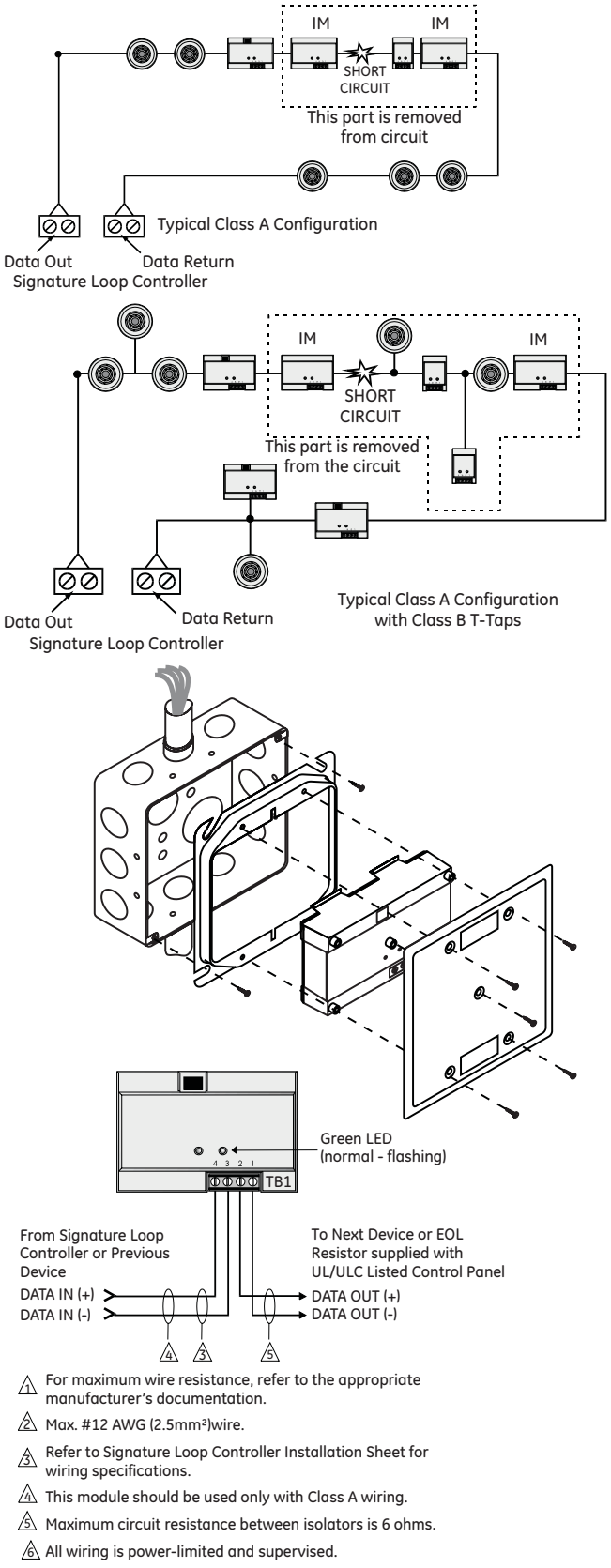


1. For maximum wire resistance, refer to the appropriate manufacturer's documentation.
2. Max. #12 AWG (2.5mm²)wire.
3. Refer to Signature Loop Controller Installation Sheet for wiring specifications.
4. This module should be used only with Class A wiring.
5. Maximum circuit resistance between isolators is 6 ohms.
6. All wiring is power-limited and supervised.

## Specifications

| | |
|---|---|
| Description | Isolator Module - factory set hardware type code |
| Address Requirements | Uses One Detector Address |
| Circuit Resistance | Six ohms maximum between isolators |
| Operating Current | Standby = 45µA; Activated = 45µA |
| Operating Voltage | 15.2 to 19.95 Vdc (19 Vdc nominal) |
| Construction & Finish | High Impact Engineering Polymer 2-gang front plate - White Finish |
| Storage Environment | Temperature: -4°F to 140°F (-20°C to 60°C) |
| Operating Environment | Temperature: 32°F to 120°F (0°C to 49°C); Humidity: 0 to 93% RH |
| LED Operation | On-board Green LED - Flashes when polled (normal) |
| Compatibility | Use with: Signature Loop Controller |
| Agency Listings | UL, ULC, CSFM, MEA, FM |

## Ordering Information 28 31 01

| Catalog Number | Description | Ship Wt. lb (kg) |
|---|---|---|
| ★ SIGA-IM | Fault Isolator Module - UL/ULC Listed | .5 (.23) |
| **Accessories** | | |
| 27193-21 | Surface Mount Box - 2-gang RED | 1 (.4) |
| 27193-26 | Surface Mount Box - 2-gang WHITE | |
| MFC-A | Multifunction Fire Cabinet - Red, supports Signature Module Mounting Plates | 7.0 (3.1) |
| SIGA-MP1 | Signature Module Mounting Plate, 1 footprint | 1.5 (0.70) |
| SIGA-MP2 | Signature Module Mounting Plate, 1/2 footprint | 0.5 (0.23) |
| SIGA-MP2L | Signature Module Mounting Plate, 1/2 extended footprint | 1.02 (0.46) |

Contact us...

Email: edwards.fire@fs.utc.com
Web: *www.est-fire.com*

EST is an **EDWARDS** brand.

1016 Corporate Park Drive
Mebane, NC 27302

In Canada, contact Chubb Edwards...
Email: inquiries@chubbedwards.com
Web: *www.chubbedwards.com*

© 2013 UTC Fire & Security Americas Corporation, Inc. All rights reserved. Specifications subject to change without notice. Edwards is part of UTC Climate, Controls & Security, a unit of United Technologies Corporation.

28 31 01

# Manual Pull Stations

## SIGA-270, SIGA-270P, SIGA-278




SIGA-270 SERIES

MEA

Patented

STANTEC PROJECT #: 110126045 SUBMITTAL # ELE-002 Fire Alarm Systems

This review by Stantec is for general conformance with the design concept of Stantec's design of the:
☐ Architectural ☐ Structural ☐ Mechanical ☑ Electrical ☐ Other

component(s) only and does not mean that Stantec has verified or approves the shop drawing(s). The Contractor remains solely responsible for the shop drawing(s) and this review by Stantec does not relieve the Contractor of the Contractor's responsibility for errors or omissions in the shop drawing(s) or for meeting all requirements of the contract documents. This review does not mean that Stantec approves the detailed design inherent in the shop drawing, responsibility for which shall remain with the Contractor submitting same, nor does this review mean that Stantec accepts any deviation of the shop drawing(s) from the contract documents. The Contractor is responsible for confirming all dimensions and correlating them at the job site, for all construction means, methods and techniques, and for coordination of construction work of all trades, including coordination of all shop drawings.

Stantec

☐ REVIEWED
☑ REVIEWED, AS NOTED
☐ REVISE AND RESUBMIT
☐ NOT REVIEWED

DATE June 20, 2018

BY Chester Martinez, E.I.T.

Provide pull stations approved for the location in which they are installed as per the electrical drawings.

## Overview

The SIGA-270 and SIGA-278 series Manual Pull Stations are part of EST's Signature Series system. The SIGA-270 Fire Alarm Manual Pull Stations feature our very familiar teardrop shape. They are made from die-cast zinc and finished with red epoxy powder-coat paint complemented by aluminum colored stripes and markings. With positive pull-lever operation, one pull on the station handle breaks the glass rod and turns in a positive alarm, ensuring protection plus fool-proof operation. Presignal models (SIGA-270P) are equipped with a general alarm (GA) keyswitch for applications where two stage operation is required. The up-front highly visible glass rod discourages tampering, but is not required for proper operation.

EST's double action single stage SIGA-278 station is a contemporary style manual station made from durable red colored lexan. To initiate an alarm, first lift the upper door marked "LIFT THEN PULL HANDLE", then pull the alarm handle.

## Standard Features

***Note:*** *Some features described here may not be supported by all control systems. Check your control panel's Installation and Operation Guide for details.*

- **Traditional familiar appearance**
  SIGA-270 models feature our familiar teardrop design with simple positive pull action and sturdy die-cast metal body.
- **One stage (GA), two stage (pre-signal), and double action models**
  SIGA-270 models are available for one or two stage alarm systems. The single stage double action SIGA-278 features a rugged Lexan housing with keyed reset mechanism.
- **Break glass operation**
  An up-front visible glass rod on the SIGA-270 discourages tampering.
- **Intelligent device with integral microprocessor**
  All decisions are made at the station allowing lower communication speed while substantially improving control panel response time. Less sensitive to line noise and loop wiring properties; twisted or shielded wire is not required.
- **ADA Compliant**
  Meets ADA requirements for manual pull stations.
- **Electronic Addressing with Non-volatile memory**
  Permanently stores programmable address, serial number, type of device, and job number. Automatically updates historic information including hours of operation, last maintenance date, number of alarms and troubles, and time and date of last alarm.
- **Automatic device mapping**
  Each station transmits wiring information to the loop controller regarding its location with respect to other devices on the circuit.
- **Stand-alone operation**
  The station inputs an alarm even if the loop controller's polling interrogation stops.
- **Diagnostic LEDs**
  Status LEDs; flashing GREEN shows normal polling; flashing RED shows alarm state.
- **Designed for high ambient temperature operation**
  Install in ambient temperatures up to 120 °F (49 °C).

## Application

The operating characteristics of the fire alarm stations are determined by their sub-type code or “Personality Code”. NORMALLY-OPEN ALARM - LATCHING (Pesonality Code 1**)** is assigned by the factory; no user configuration is required. The device is configured for Class B IDC operation. An ALARM signal is sent to the loop controller when the station’s pull lever is operated. The alarm condition is latched at the station.

## Compatibility

Signature Series manual stations are compatible only with EST’s Signature Loop Controller.

## Warnings & Cautions

This device will not operate without electrical power. As fires frequently cause power interruption, we suggest you discuss further safeguards with your local fire protection specialist.

## Testing & Maintenance

To test (or reset) the station simply open the station and operate the exposed switch. The SIGA-270 series are opened with a tool; the SIGA-278 requires the key which is supplied with that station.

The station’s automatic self-diagnosis identifies when it is defective and causes a trouble message. The user-friendly maintenance program shows the current state of each Signature series device and other pertinent messages. Single devices may be deactivated temporarily, from the control panel. Availability of maintenance features is dependent on the fire alarm system used.

Scheduled maintenance (Regular or Selected) for proper system operation should be planned to meet the requirements of the Authority Having Jurisdiction (AHJ). Refer to current NFPA 72 and ULC CAN/ULC 536 standards.

## Typical Wiring

28 31 01

The fire alarm station’s terminal block accepts #18 AWG (0.75mm$^2$) to #12 AWG (2.5mm$^2$) wire sizes. See Signature Loop Controller catalog sheet for detailed wiring requirement specifications.

### Wiring Notes

1. Refer to Signature Loop Controller manual for maximum wire distance.
2. All wiring is power limited and supervised.

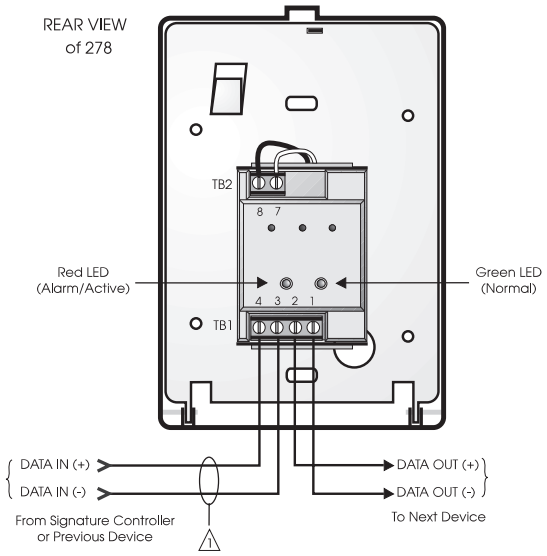


**Figure 4. Single Stage Systems**

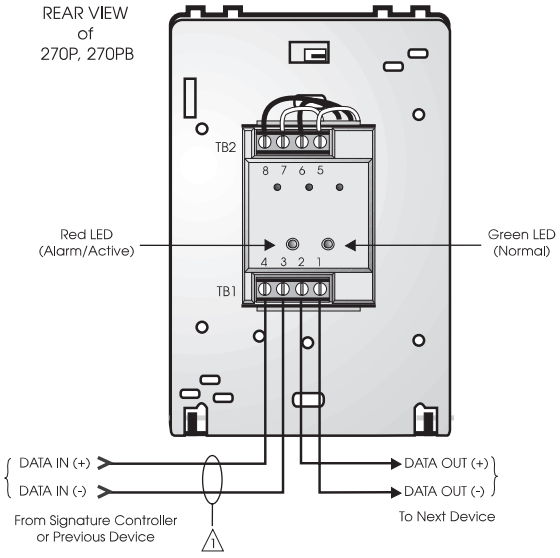


**Figure 5. Two Stage Systems**

**Single-stage** Signature Series fire alarm manual pull stations mount to North American 2½ inch (64 mm) deep 1-gang boxes.

**Two stage** presignal (270P) models require 1½ inch (38 mm) deep 4-inch square boxes with 1-gang, ½-inch raised covers. Openings must be angular. *Rounded openings are not acceptable.* Recommended box: Steel City Model 52-C-13; in Canada, use Iberville Model CI-52-C-49-1/2.

**All models** include terminals are suited for #12 to #18 AWG (2.5 $mm^2$ to 0.75 $mm^2$) wire size. Edwards recommends that these fire alarm stations be installed according to latest recognized edition of national and local fire alarm codes.

**Electronic Addressing:** The loop controller electronically addresses each manual station, saving valuable time during system commissioning. Setting complicated switches or dials is not required. Each station has its own unique serial number stored in its on-board memory. The loop controller identifies each device on the loop and assigns a "soft" address to each serial number. If desired, the stations can be addressed using the SIGA-PRO Signature Program/Service Tool.

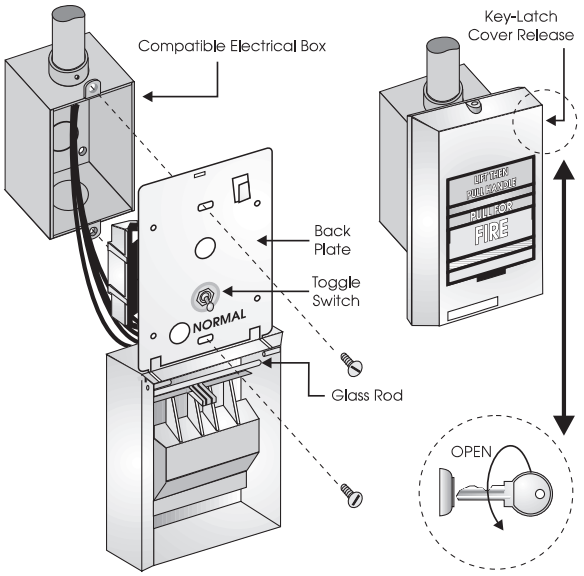


**Figure 1. SIGA-278 installation**

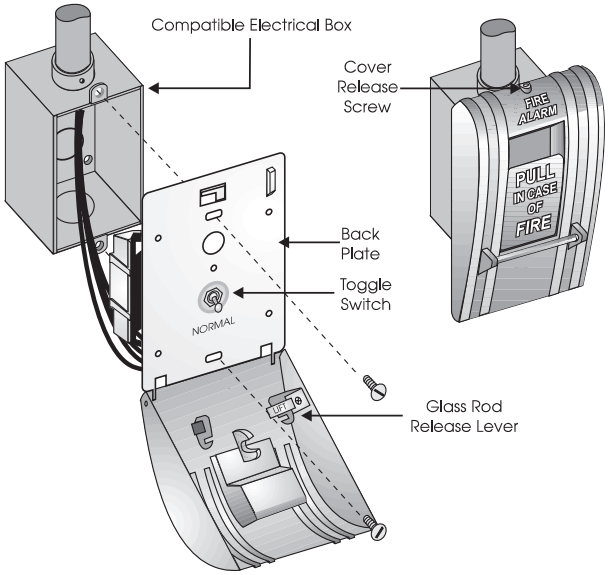


**Figure 2. SIGA-270, SIGC-270F, SIGC-270B installation**

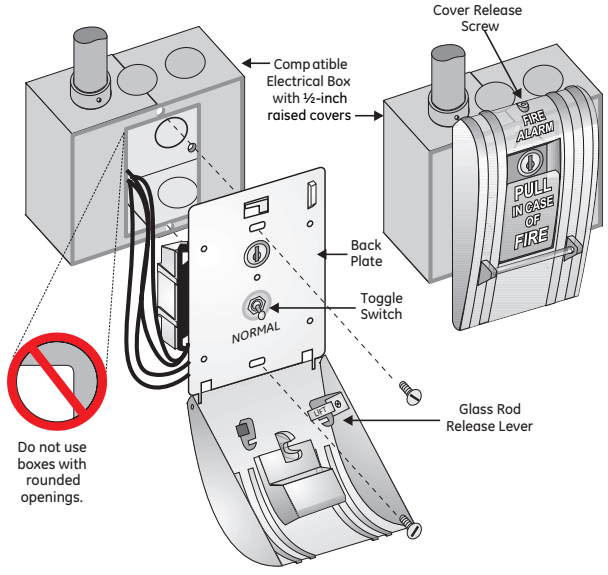


**Figure 3. SIGA-270P, SIGC-270PB installation**

EDWARDS
A UTC Fire & Security Company

**Detection & alarm since 1872**

**U.S.**
**T 888-378-2329**
**F 866-503-3996**

**Canada**
**Chubb-Edwards**
**T 519 376 2430**
**F 519 376 7258**

**Southeast Asia**
**T : +65 6391 9300**
**F : +65 6391 9306**

**India**
**T : +91 80 4344 2000**
**F : +91 80 4344 2050**

**Australia**
**T +61 3 9239 1200**
**F +61 3 9239 1299**

**Europe**
**T +32 2 725 11 20**
**F +32 2 721 86 13**

**Latin America**
**T 305 593 4301**
**F 305 593 4300**

**utcfireandsecurity.com**

**© 2010 UTC Fire & Security.**
**All rights reserved.**

## Specifications

| Catalog Number | SIGA-270, SIGC-270F, SIGC-270B | SIGA-270P, SIGC-270PB | SIGA-278 |
|---|---|---|---|
| Description | Single Action - One Stage | Single Action -Two Stage (Presignal) | Double Action - One Stage |
| Addressing Requirements | Uses 1 Module Address | Uses 2 Module Addresses | Uses 1 Module Address |
| Operating Current | Standby = 250µA Activated = 400µA | Standby = 396µA Activated = 680µA | Standby = 250µA Activated = 400µA |
| Construction & Finish | Diecast Zinc - Red Epoxy with aluminum markings | | Lexan - Red with white markings |
| Type Code | Factory Set | | |
| Operating Voltage | 15.2 to 19.95 Vdc (19 Vdc nominal) | | |
| Storage and Operating Environment | Operating Temperature: 32ºF to 120ºF (0ºC to 49ºC) Storage Temperature: -4ºF to 140ºF (-20ºC to 60ºC) Humidity: 0 to 93% RH | | |
| LED Operation | On-board Green LED - Flashes when polled On-board Red LED - Flashes w hen in alarm Both LEDs - Glow steady when in alarm (stand-alone) | | |
| Compatibility | Use With: Signature Loop Controller | | |
| Agency Listings | UL, ULC (note 1), MEA, CSFM | | |

***Note:*** *SIGC-270F, SIGC-270B and SIGC-270PB are ULC listed only. Suffix "F" indicates French markings. Suffix "B" indicates English/French biling ual markings.*

## Ordering Information

| | Catalog Number | Description | Ship Wt. lbs (kg) |
|---|---|---|---|
| ★ | SIGA-270 | One Stage Fire Alarm Station, English Markings - UL/ULC Listed | 1 (0.5) |
| | SIGC-270F | One Stage Fire Alarm Station, French Markings - ULC Listed | |
| | SIGC-270B | One Stage Fire Alarm Station, French/English Markings - ULC Listed | |
| | SIGA-270P | Two Stage (Presignal) Fire Alarm Station, English Markings - UL/ULC Listed | |
| | SIGC-270PB | Two Stage (Presignal) Fire Alarm Station, French/English Markings - ULC Listed | |
| | SIGA-278 | Double Action (One Stage) Fire Alarm Station, English Markings - UL/ULC Listed | |

| Accessories | | |
|---|---|---|
| 32997 | GA Key w/Tag - for pre-signal station (CANADA ONLY) | 0.1 (.05) |
| 276-K2 | GA Key - for pre-signal station (USA ONLY) | |
| 276-K1 | Station Reset Key, Supplied with all Key Reset Stations | |
| 27165 | 12 Glass Rods - for SIGA-270 series (CANADA ONLY) | |
| 270-GLR | 20 Glass Rods - for SIGA-270 series (USA ONLY) | |
| 276-GLR | 20 Glass Rods - for SIGA-278 series | |
| 276B-RSB | Surface Mount Box, Red - for SIGA pull stations | 1 (0.6) |

STANTEC PROJECT #: 110126045

SUBMITTAL # ELE-002 Fire Alarm Systems

This review by Stantec is for general conformance with the design concept of Stantec's design of the:

☐ Architectural ☐ Structural ☐ Mechanical ☑ Electrical ☐ Other

component(s) only and does not mean that Stantec has verified or approves the shop drawing(s). The Contractor remains solely responsible for the shop drawing(s) and this review by Stantec does not relieve the Contractor of the Contractor's responsibility for errors or omissions in the shop drawing(s) or for meeting all requirements of the contract documents. This review does not mean that Stantec approves the detailed design inherent in the shop drawing, responsibility for which shall remain with the Contractor submitting same, nor does this review mean that Stantec accepts any deviation of the shop drawing(s) from the contract documents. The Contractor is responsible for confirming all dimensions and correlating them at the job site, for all construction means, methods and techniques, and for coordination of construction work of all trades, including coordination of all shop drawings.

Stantec

☑ REVIEWED

☐ REVIEWED, AS NOTED 28 31 01

☐ REVISE AND RESUBMIT

☐ NOT REVIEWED

DATE June 20, 2018

BY Chester Martinez, E.I.T.

EST™ Life Safety & Communications

# Field Configurable Horns and Strobes

## Genesis Series

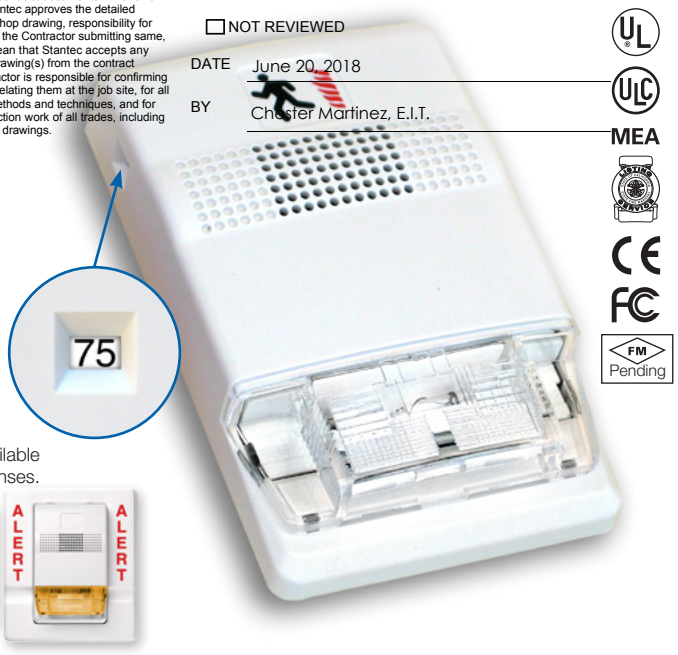


ECS/MNS appliances available with clear or amber lenses.




## Overview

The Genesis line of fire alarm and mass notification/emergency communications (ECS/MNS) signals are among the smallest, most compact audible-visible life safety signaling devices in the world. About the size of a deck of playing cards, these devices are designed to blend with any decor.

Thanks to patented breakthrough technology, Edwards Genesis strobes do not require bulky specular reflectors and lenses. Instead, an exclusive cavity design conditions light to produce a highly controlled distribution pattern. Significant development efforts employing this new technology have given rise to a new benchmark in strobe performance – FullLight technology.

FullLight strobe technology produces a smooth light distribution pattern without the spikes and voids characteristic of specular reflectors. This ensures the entire coverage area receives consistent illumination from the strobe flash. As a result, Genesis strobes with FullLight technology go well beyond the UL-1971 and ULC-S526 light distribution requirements.

Genesis strobes and horn-strobes offer selectable candela output by means of a conveniently-located switch on the side of the device. Models are also available that offer fixed 15/75 cd output. The candela output setting remains clearly visible even after final installation, yet it stays locked in place to prevent unauthorized tampering.

Genesis ECS/MNS appliances offer emergency signaling with clear or amber lenses and with optional ALERT housing labels. They are ideal for applications that require differentiation between fire alarm and mass notification alerts.

## Standard Features

- **Unique low-profile design**
  - The most compact UL-1971/ULC-S526 listed strobe available
  - Ultra-slim – protrudes less than one inch
  - Attractive appearance
  - No visible mounting screws
- **Four field-configurable options in one device**
  - Select 15, 30, 75, or 110 cd strobe output
  - Select high (default) or low dB horn output
  - Select temporal (default) or steady horn output
  - Select public mode flash rate (default) or private mode temporal flash
- **Fixed 15/75 cd model available**
- **ECS/MNS models available**
- **Easy to install**
  - Fits standard 1-gang electrical boxes – no trim plate needed
  - Optional trim plate accommodates oversized openings
  - Pre-assembled with captive hardware
  - #12 AWG terminals – ideal for long runs or existing wiring
- **Unparalleled performance**
  - Industry's most even light distribution
  - Meets tough synchronizing standards for strobes
  - Single microprocessor controls both horn and strobe
  - Independent horn control over a single pair of wires
  - Highly regulated in-rush current
  - Multiple frequency tone improves sound penetration
  - Field-programmable temporal strobe output option

## Application

Genesis strobes are UL 1971-listed for use indoors as wall-mounted public-mode notification appliances for the hearing impaired. Prevailing codes require strobes to be used where ambient noise conditions exceed 105 dBA (87dBA in Canada), where occupants use hearing protection, and in areas of public accommodation as defined in the *Americans with Disabilities Act (see application notes – USA)*.

Combination horn-strobe signals must be installed in accordance with guidelines established for strobe devices. Consult with your Authority Having Jurisdiction for details.

All Genesis strobes exceed UL synchronization requirements (within 10 milliseconds over a two-hour period) when used with a synchronization source. Synchronization is important in order to avoid epileptic sensitivity.

**WARNING:** These devices will not operate without electrical power. As fires frequently cause power interruptions, further safeguards such as backup power supplies may be required.

### Horns

Genesis horn output reaches as high as 99 dB and features a unique multiple frequency tone that results in excellent sound penetration and an unmistakable warning of danger. Horns may be configured for either coded or non-coded signal circuits. They can also be set for low dB output with a jumper cut that reduces horn output by about 5 dB. Horn-only models may be ceiling-mounted or wall-mounted.

The suggested sound pressure level for each signaling zone used with alarm signals is at least 15 dB above the average ambient sound level, or 5 dB above the maximum sound level having a duration of at least 60 seconds, whichever is greater, measured 5 feet (1.5 m) above the floor. The average ambient sound level is, A-weighted sound pressure measured over a 24-hour period.

Doubling the distance from the signal to the ear will theoretically result in a 6 dB reduction of the received sound pressure level. The actual effect depends on the acoustic properties of materials in the space. A 3 dBA difference represents a barely noticeable change in volume.

### ECS/MNS Applications

Genesis ECS/MNS strobe appliances bring the same high-performance fire alarm features and unobtrusive design to mass notification applications. Available with amber lenses and optional ALERT housing labels, they are ideal for applications that require differentiation between fire alarm and mass notification alerts.

## Installation

Genesis horns and strobes mount to any standard one-gang surface or flush electrical box. Matching optional trim plates are used to cover oversized openings and can accommodate one-gang, two-gang, four-inch square, or octagonal boxes, and European 100 mm square.




**Genesis Horn/Strobe with optional trim plate**

All Genesis signals come pre-assembled with captive mounting screws for easy installation. Two tabs at the top of the signal unlock the cover to reveal the mounting hardware. The shallow depth of Genesis devices leaves ample room behind the signal for extra wiring. Once installed with the cover in place, no mounting screws are visible.

### Field Configuration

Temporal horn and horn-strobe models are factory set to sound in a **three-pulse temporal pattern**. Units may be configured for use with coded systems by cutting a jumper on the circuit board. This results in a **steady output** that can be turned on and off (coded) as the system applies and removes power to the signal circuit. A Genesis Signal Master is required when horn-strobe models are configured for coded systems. Non-temporal, horn-only models sound a steady tone.

Genesis clear strobes and horn-strobes are shipped from the factory ready for use as **UL 1971 compliant** signals for public mode operation. These signals may be configured for **temporal flash** by cutting a jumper on the circuit board. This battery-saving feature is intended for private mode signaling only.

Genesis clear strobes and horn-strobes may be set for **15, 30, 75, or 110 candela output**. The output setting is changed by simply opening the device and sliding the switch to the desired setting. The device does not have to be removed to change the output setting. The setting remains visible through a small window on the side of the device after the cover is closed.

Horns and horn-strobes are factory set for **high dB output**. **Low dB output** may be selected by cutting a jumper on the circuit board. This reduces the output by about 5 dB.

## Wiring

Field wiring terminals accommodate #18 to #12 AWG (0.75 mm² to 2.5 mm²) wiring. Horns, strobes, and combination horn-strobes are interconnected with a single pair of wires as shown below.

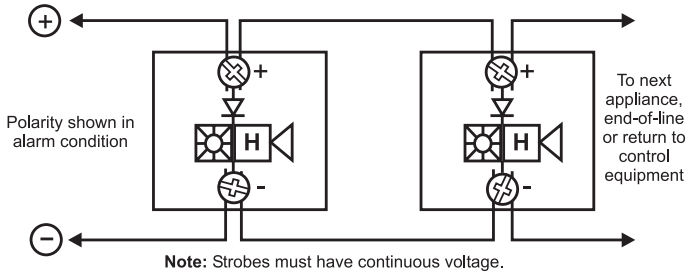


**Note:** Strobes must have continuous voltage.

# Current Draw

28 31 01

## Strobes, Horn-Strobes

### Multi-cd Wall Strobes (G1-VM)

| UL Rating | 15 cd* RMS | 30 cd* RMS | 15/75 cd** RMS | 75 cd* RMS | 110 cd* RMS |
|---|---|---|---|---|---|
| 16 Vdc | 103 | 141 | 152 | 255 | 311 |
| 16 Vfwr | 125 | 179 | 224 | 346 | 392 |

*G1-VM multi-cd; **G1F-V1575 fixed 15/75 cd

| Typical Current | 15 cd RMS | 30 cd RMS | 15/75 RMS | 75 cd RMS | 110 cd RMS |
|---|---|---|---|---|---|
| 16 Vdc | 85 | 127 | 150 | 245 | 285 |
| 20 Vdc | 71 | 98 | 123 | 188 | 240 |
| 24 Vdc | 59 | 82 | 104 | 152 | 191 |
| 33 Vdc | 46 | 64 | 84 | 112 | 137 |
| 16 Vfwr | 119 | 169 | 223 | 332 | 376 |
| 20 Vfwr | 103 | 143 | 189 | 253 | 331 |
| 24 Vfwr | 94 | 129 | 169 | 218 | 262 |
| 33 Vfwr | 87 | 112 | 148 | 179 | 205 |

### Wall Temporal Horn-strobes – High dB Setting

| UL Rating | 15 cd* RMS | 30 cd* RMS | 15/75 cd** RMS | 75 cd* RMS | 110 cd* RMS |
|---|---|---|---|---|---|
| 16 Vdc | 129 | 167 | 172 | 281 | 337 |
| 16 Vfwr | 176 | 230 | 269 | 397 | 443 |

*G1-HDVM multi-cd
**G1F-HDV1575 fixed 15/75 cd

| Typical Current | 15 cd RMS | 30 cd RMS | 15/75 RMS | 75 cd RMS | 110 cd RMS |
|---|---|---|---|---|---|
| 16 Vdc | 102 | 135 | 160 | 246 | 309 |
| 20 Vdc | 88 | 109 | 137 | 193 | 248 |
| 24 Vdc | 81 | 94 | 122 | 161 | 203 |
| 33 Vdc | 74 | 72 | 106 | 124 | 154 |
| 16 Vfwr | 144 | 182 | 247 | 352 | 393 |
| 20 Vfwr | 141 | 162 | 220 | 274 | 362 |
| 24 Vfwr | 136 | 152 | 203 | 235 | 282 |
| 33 Vfwr | 125 | 144 | 196 | 201 | 232 |

### Wall Temporal Horn-strobes – Low dB Setting

| UL Rating | 15 cd* RMS | 30 cd* RMS | 15/75 cd** RMS | 75 cd* RMS | 110 cd* RMS |
|---|---|---|---|---|---|
| 16 Vdc | 122 | 160 | 146 | 274 | 330 |
| 16 Vfwr | 162 | 216 | 231 | 383 | 429 |

*G1-HDVM multi-cd
**G1F-HDV1575 fixed 15/75 cd

| Typical Current | 15 cd RMS | 30 cd RMS | 15/75 RMS | 75 cd RMS | 110 cd RMS |
|---|---|---|---|---|---|
| 16 Vdc | 96 | 130 | 158 | 243 | 302 |
| 20 Vdc | 79 | 104 | 133 | 189 | 241 |
| 24 Vdc | 68 | 88 | 119 | 156 | 197 |
| 33 Vdc | 56 | 71 | 100 | 118 | 146 |
| 16 Vfwr | 128 | 180 | 241 | 344 | 389 |
| 20 Vfwr | 118 | 157 | 213 | 266 | 343 |
| 24 Vfwr | 113 | 144 | 195 | 230 | 279 |
| 33 Vfwr | 112 | 137 | 182 | 197 | 226 |

## Horns

### Wall or Ceiling Mounted Temporal Horns (G1-HD)

| UL Rating | High dB (RMS) | Low dB (RMS) |
|---|---|---|
| 16 Vdc | 26 | 19 |
| 24 Vdc | 36 | 27 |
| 33 Vdc | 41 | 33 |
| 16 Vfwr | 51 | 37 |
| 24 Vfwr | 69 | 52 |
| 33 Vfwr | 76 | 70 |

| Typical Current | High dB RMS | Low dB RMS |
|---|---|---|
| 16 Vdc | 22 | 17 |
| 20 Vdc | 24 | 19 |
| 24 Vdc | 27 | 22 |
| 33 Vdc | 32 | 26 |
| 16 Vfwr | 34 | 30 |
| 20 Vfwr | 40 | 34 |
| 24 Vfwr | 45 | 38 |
| 33 Vfwr | 52 | 47 |

### Wall or Ceiling Mounted Horns (G1-P)

| UL Designation | Voltage Range | Max. Current, RMS |
|---|---|---|
| Regulated 24 Vdc | 16 - 33 Vdc | 13 mA |
| 24 fwr | 16 - 33 Vfwr | 11 mA |

| Typical Current | RMS |
|---|---|
| 24 Vdc | 10 |
| 24 Vdc | 11 |
| 31 Vdc | 12 |
| 20 Vfwr | 9 |
| 24 Vfwr | 10 |

Current values are shown in mA.

## dBA output

### Temporal Horns, Horn-strobes (G1-HD, G1-HDVM series)

| High dB Setting | UL464 | | Average | Peak |
|---|---|---|---|---|
| | Temporal | Steady | Temporal/ Steady | Temporal/ Steady |
| 16 Vdc | 81.4 | 85.5 | 91.4 | 94.2 |
| 24 Vdc | 84.4 | 88.6 | 94.5 | 97.6 |
| 33 Vdc | 86.3 | 90.4 | 96.9 | 99.5 |

| Low dB Setting | UL464 | | Average | Peak |
|---|---|---|---|---|
| | Temporal | Steady | Temporal/ Steady | Temporal/ Steady |
| 16 Vdc | 76.0 | 80.1 | 86.3 | 89.2 |
| 24 Vdc | 79.4 | 83.5 | 89.8 | 92.5 |
| 33 Vdc | 82.1 | 86.5 | 92.5 | 95.3 |

### Steady Tone Horns (G1-P series)

| | UL464 | Average | Peak |
|---|---|---|---|
| 16 Vdc | 77 dBA, min | 85 dBA | 91 dBA |
| 16 Vfwr | 77 dBA, min | 85 dBA | 91 dBA |

**Notes**

1. All values shown are dBA measured at 10 feet (3.01m).
2. UL464 values measured in reverberant room.
3. Average and Peak values are measured in anechoic chamber.

## Average Sound Output (dBA)

(High dB setting, anechoic, 24V, measured at 10ft)

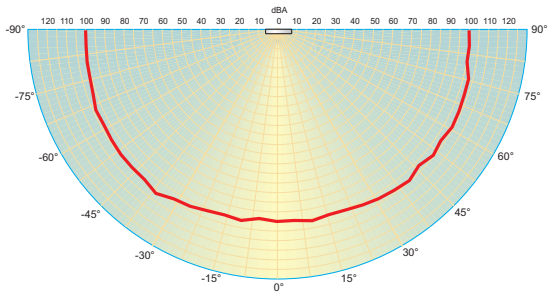


## Light output - (effective cd)

Percent of UL rating versus angle

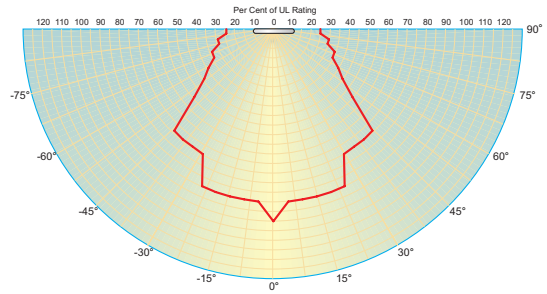


## Specifications

| | |
|---|---|
| Housing | Red or white textured UV stabilized, color impregnated engineered plastic. Exceeds 94V-0 UL flammability rating. |
| Lens | Optical grade polycarbonate (clear) |
| Mounting (indoor only) | Strobes and horn-strobes are for wall-mount installation only. Horn-only models may be ceiling- or wall-mounted.<br>Flush mount: 2½ inch (64 mm) deep one-gang box<br>Surface mount: Model 27193 surface mount box, wiremold box, or equivalent surface-mount box<br>With optional trim plate: One-gang, two-gang, four-inch square, octagonal, or European single-gang box |
| Wire connections | Screw terminals: single input for both horn and strobe. #18 to #12 AWG (0.75 $mm^2$ to 2.5 $mm^2$) wire size |
| Operating environment | Indoor only: 32-120°F (0-49°C) ambient temperature. 93% relative humidity |
| Agency listings/approvals | UL 1971, UL 1638, UL 464, ULC S525, ULC S526, CSFM, CE, FCC, MEA.<br>(All models comply with ADA Code of Federal Regulation Chapter 28 Part 36 Final Rule.) |
| Dimensions (HxWxD) | Signal: 4-1/2" x 2-3/4" x 13/16" (113 mm x 68 mm x 21 mm)<br>Trimplate: 5" (127 mm); Height – 5-7/8" (149 mm); Depth – ½" (13 mm) |
| Operating voltage | G1-HD series temporal-tone horns: non-coded, filtered 16-33 Vdc or unfiltered 16-33 Vdc FWR (or coded when horn set to steady tone)<br>G1-HDVM series temporal-tone horn-strobes: non-coded, filtered 16-33 Vdc or unfiltered 16-33 Vdc FWR (or coded (audible NAC only) when used with optional G1M Genesis Signal Master)<br>G1-VM series strobes: non-coded, filtered 16 - 33 Vdc or unfiltered 16-33 Vdc FWR<br>G1-P series steady-tone horns: coded or non-coded, filtered 20-31 Vdc or unfiltered 20-27 Vfwr |
| Strobe output rating | UL 1971, UL 1638, ULC S526: selectable 15 cd, 30 cd, 75 cd, or 110 cd output<br>UL 1971: 15 cd (fixed 15/75 cd models)<br>UL 1638, ULCS526: 75 cd (fixed 15/75 cd models) |
| Strobe flash rate | G1-VM strobes and G1-HDVM series temporal-tone horn-strobes: one flash per second synchronized with optional G1M Genesis Signal Master indefinitely within 10 milliseconds. Temporal setting (private mode only): synchronized to temporal output of horns on same circuit |
| Synchronization Sources | SIGA-CC1S, SIGA-MCC1S, SIGA-CC2A, SIGA-MCC2A, G1M-RM<br>BPS6A, BPS10A, APS6A, APS10A, iO64, iO500, Fireshield Plus 3, 5 and 10 zone.<br>Add G1M for G1-CVM &G1-HDVM devices only. |
| Horn pulse rate | G1-HD temporal-tone horns and G1-HDVM series temporal-tone horn-strobes: temporal rate synchronized with optional G1M Genesis Signal Master indefinitely within 10 milliseconds. G1-P steady-tone horns: continuous, steady tone only |
| Temporal audible pattern | ½ sec ON, ½ sec OFF, ½ sec ON, ½ sec OFF, ½ sec ON, 1½ sec OFF, then repeat cycle |

## Candela Output

| Lens Color | Rating | Switch Position A | Switch Position B | Switch Position C | Switch Position D |
|---|---|---|---|---|---|
| Amber | UL 1638 | 110 cd | 75 cd | 30 cd | 15 cd |
| Amber | UL 1971* | 88 cd | 60 cd | 24 cd | 12 cd |
| Clear | UL 1971 | 110 cd | 75 cd | 30 cd | 15 cd |

** Equivalent Rating*

Fire appliances available with white or red housings.




ECS/MNS appliances available with clear or amber lenses.




## Ordering Information

| Model | Housing | Marking | Lens | Strobe | Horn | Ship Wt. lbs (kg) |
|---|---|---|---|---|---|---|
| **Fire Alarm Appliances (c/w running man icon screen printed on housing)** | | | | | | |
| G1-VM | White | None | Clear | Selectable 15, 30, 75, or 110 cd | Strobe only | 0.25 (0.11) |
| G1F-HD | White | FIRE | Clear | Horn only | Selectable high/low dB | 0.25 (0.11) |
| G1F-HDV1575 | White | FIRE | Clear | 15/75 cd[1] | Temporal hi/lo dB-24V | 0.25 (0.11) |
| G1F-HDVM | White | FIRE | Clear | Selectable 15, 30, 75, or 110 cd | Selectable high/low dB | 0.25 (0.11) |
| G1F-P | White | FIRE | Clear | Steady Horn (not compatible with Genesis Signal Master) | | 0.25 (0.11) |
| G1F-V1575 | White | FIRE | Clear | 15/75 cd[1] | Strobe only | 0.25 (0.11) |
| G1F-VM | White | FIRE | Clear | Selectable 15, 30, 75, or 110 cd | Strobe only | 0.25 (0.11) |
| G1-HD | White | None | Clear | Horn only | Selectable high/low dB | 0.25 (0.11) |
| G1-HDVM | White | None | Clear | Selectable 15, 30, 75, or 110 cd | Selectable high/low dB | 0.25 (0.11) |
| G1-P | White | None | Clear | Steady Horn (not compatible with Genesis Signal Master) | | 0.25 (0.11) |
| G1RF-HD | Red | FIRE | Clear | Horn only | Selectable high/low dB | 0.25 (0.11) |
| G1RF-HDV1575 | Red | FIRE | Clear | 15/75 cd[1] | Temporal hi/lo dB-24V | 0.25 (0.11) |
| ★ G1RF-HDVM | Red | FIRE | Clear | Selectable 15, 30, 75, or 110 cd | Selectable high/low dB | 0.25 (0.11) |
| G1RF-P | Red | FIRE | Clear | Steady Horn (not compatible with Genesis Signal Master) | | 0.25 (0.11) |
| G1RF-V1575 | Red | FIRE | Clear | 15/75 cd[1] | Strobe only | 0.25 (0.11) |
| G1RF-VM | Red | FIRE | Clear | Selectable 15, 30, 75, or 110 cd | Strobe only | 0.25 (0.11) |
| G1R-HD | Red | None | Clear | Horn only | Selectable high/low dB | 0.25 (0.11) |
| G1R-HDVM | Red | None | Clear | Selectable 15, 30, 75, or 110 cd | Selectable high/low dB | 0.25 (0.11) |
| G1R-P | Red | None | Clear | Steady Horn (not compatible with Genesis Signal Master) | | 0.25 (0.11) |
| G1R-VM | Red | None | Clear | Selectable 15, 30, 75, or 110 cd | Strobe only | 0.25 (0.11) |
| **ECS/MNS Appliances (no running man icon on housing)** | | | | | | |
| G1WA-VMA | White | ALERT | Amber | Selectable A, B, C or D | Strobe only | 0.25 (0.11) |
| G1WA-VMC | White | ALERT | Clear | Selectable 15, 30, 75, or 110 cd | Strobe only | 0.25 (0.11) |
| G1WN-VMA | White | None | Amber | Selectable A, B, C or D | Strobe only | 0.25 (0.11) |
| G1WN-VMC | White | None | Clear | Selectable 15, 30, 75, or 110 cd | Strobe only | 0.25 (0.11) |
| **Trim Plates** | | | | | | |
| G1T | White | None | Genesis Trim Plate (for two-gang or 4" square boxes) | | | 0.15 (0.7) |
| G1RT | Red | None | Genesis Trim Plate (for two-gang or 4" square boxes) | | | 0.15 (0.7) |
| G1T-FIRE | White | FIRE | Genesis Trim Plate (for two-gang or 4" square boxes) | | | 0.15 (0.7) |
| G1RT-FIRE | Red | FIRE | Genesis Trim Plate (for two-gang or 4" square boxes) | | | 0.15 (0.7) |
| G1WT-ALERT | White | ALERT | Genesis Trim Plate (for two-gang or 4" square boxes) | | | 0.15 (0.7) |
| **Surface Boxes** | | | | | | |
| 27193-16 | White | N/A | One-gang surface mount box | | | 1 (0.4) |
| 27193-11 | Red | N/A | One-gang surface mount box | | | 1 (0.4) |

[1] These 15/75 cd models provide fixed output and are not multi-candela devices. The 15 cd output component complies with UL1971, while the 75 cd output component complies with UL 1638.

28 31 01

EDWARDS
A UTC Fire & Security Company

**Detection & alarm since 1872**

U.S.
T 888 378 2329
F 866 503 3996

Canada
Chubb Edwards
T 519 376 2430
F 519 376 7258

Southeast Asia
T : +65 6391 9300
F : +65 6391 9306

India
T : +91 80 4344 2000
F : +91 80 4344 2050

Australia
T +61 3 9239 1200
F +61 3 9239 1299

Europe
T +32 2 725 11 20
F +32 2 721 86 13

Latin America
T 305 593 4301
F 305 593 4300

utcfireandsecurity.com

© 2010 UTC Fire & Security.
All rights reserved.

EST Life Safety & Communications

28 31 01

# Sealed Lead-Acid Batteries



## Overview

Rechargeable sealed lead-acid batteries are ideal for use as a secondary (standby) power source as defined by ULC requirements for ULC listed fire alarm control panels. Their low maintenance and high energy density make them ideal for fire alarm signaling applications.

## Standard Features

- Rechargeable
- Non-spillable
- Non-hazardous
- Low maintenance
- High energy density

## Application

When multiple power supplies are provided, each power supply's battery requirements should be calculated individually. Consult the specific system manual to determine battery capacity requirements.

## Safety Information

Due to a battery's low internal resistance and high power density, high levels of short circuit current can develop across battery terminals. Put on protective eye covering and remove all jewelry before working on batteries. Do not rest tools or cables on the battery, and only use insulated tools. Follow all manufacturers installation instructions and diagrams when installing or maintaining batteries.

STANTEC PROJECT #: 110126045

SUBMITTAL # ELE-002 Fire Alarm Systems

This review by Stantec is for general conformance with the design concept of Stantec's design of the:

☐ Architectural ☑ Electrical
☐ Structural ☐ Other
☐ Mechanical

component(s) only and does not mean that Stantec has verified or approves the shop drawing(s). The Contractor remains solely responsible for the shop drawing(s) and this review by Stantec does not relieve the Contractor of the Contractor's responsibility for errors or omissions in the shop drawing(s) or for meeting all requirements of the contract documents. This review does not mean that Stantec approves the detailed design inherent in the shop drawing, responsibility for which shall remain with the Contractor submitting same, nor does this review mean that Stantec accepts any deviation of the shop drawing(s) from the contract documents. The Contractor is responsible for confirming all dimensions and correlating them at the job site, for all construction means, methods and techniques, and for coordination of construction work of all trades, including coordination of all shop drawings.

Stantec

☑ REVIEWED

☐ REVIEWED, AS NOTED

☐ REVISE AND RESUBMIT

☐ NOT REVIEWED

DATE June 20, 2018

BY Chester Martinez, E.I.T.

Contact us...
Email: edwards.fire@fs.utc.com
Web: *www.est-fire.com*

EST is an **EDWARDS** brand.

1016 Corporate Park Drive
Mebane, NC 27302

In Canada, contact Chubb Edwards...
Email: inquiries@chubbedwards.com
Web: *www.chubbedwards.com*

© 2015 UTC Fire & Security Americas Corporation, Inc. All rights reserved. Specifications subject to change without notice. Edwards is part of UTC Climate, Controls & Security, a unit of United Technologies Corporation.

28 31 01

## Specifications

| | |
|---|---|
| Case material | ABS thermoplastic |
| Regulatory information | DOT Class 60, batteries, non-hazardous, non-spillable |
| Operating environment | 32° F to 120° F (0° C to 49° C) 0 to 93% RH, non-condensing |

## Ordering Information

| Catalogue Number | Description | Dimensions (mm) | Shipping weight (kg) |
|---|---|---|---|
| 12V4A5 | 4.5 AH sealed lead acid battery - 12Vdc | 4.21" h x 2.76" w x 3.54" L (107 x 70 x 90) | 3.26lbs (1.48kg) |
| 12V7A2 | 7.2 AH sealed lead acid battery - 12Vdc | 4" h x 2.6" w x 6.0" L (102 x 66 x 152) | 4.85lbs (2.2kg) |
| ★ 12V10A5 | 10.5 AH sealed lead acid battery - 12Vdc | 4.8" h x 2.6" w x 6" L (122 x 66 x 152) | 7.05lbs (3.2kg) |
| 12V13A | 13 AH sealed lead acid battery - 12Vdc | 6.5" h x 3.15" w x 5.28" L (166 x 80 x 135) | 10.2lbs (4.62kg) |
| 12V18A | 18 AH sealed lead acid battery - 12Vdc | 6.6" h x 3.0" w x 7.1" L (168 x 76 x 180) | 11.73lbs (5.32kg) |
| 12V26A | 26 AH sealed lead acid battery - 12Vdc | 7.17" h x 4.92" w x 6.5" L (182 x 125 x 165) | 19.8lbs (9.0kg) |
| 12V35A | 35 AH sealed lead acid battery - 12Vdc | 6.26" h x 5.16" w x 7.76" L (159 x 131 x 197) | 24.3lbs (10.9kg) |
| 12V40A | 40 AH sealed lead acid battery - 12Vdc | 6.69" h x 6.5" w x 7.76" L (170 x 165 x 197) | 29.1lbs (13.2kg) |
| 12V50A | 50 AH sealed lead acid battery - 12Vdc | 7.87" h x 5.19" w x 10.11" L (200 x 132 x 257) | 35.3lbs (16kg) |
| 12V65A | 65 AH sealed lead acid battery - 12Vdc | 7.01" h x 6.57" w x 13.70" L (178 x 167 x 348) | 42.3lbs (19.2kg) |

# APPENDIX E

# SPARE PART LIST

| Item | Equipment | Spare part name | Quantity |
|---|---|---|---|
| 1 | Light fixture | LED driver for each type of luminaire | 1 |
| 2 | Light fixture | LED luminaire fixture type complete with driver | 1 |
| 3 | Motor starters | Spare fusesof each type and size used | 3 |
| 4 | Motor starters | Set of each type of adjustable thermal overload devices | 1 |
| 5 | Motor starters | Coil of each starter size | 1 |
| 6 | Motor starters | Control transformers | 2 |
| 7 | Motor starters | time delay device for each type used | 1 |
| 8 | Generator | Oil filter | 6 |
| 9 | Generator | Fuel filter | 6 |
| 10 | Generator | Air filter | 6 |
| 11 | Generator | Fuses of each type used in control panel | 2 |
| 12 | Generator | Accessory belts of each type used | 2 |
| 13 | Generator | Special tools used for servicing the unit | 1 |
| Provide additional spare arts recommended by the manufacturer of systems other than listed herein before | | | |

## Instrumentation and Controls Equipment Spare Parts (110126045)

| Item | Equipment | Spare Parts Name | Qty. (sets) | Specification Section | Suppliers/Manufactors |
|---|---|---|---|---|---|
| 1 | Control Panel Equipment | Alarm Dialer Protalk Plus | 1 | 47 10 01 | Barnett Engineering Ltd. |
| | | Ethernet Cables (2m) | 4 | 47 10 02 | |
| | | Fuses | 20 (each size and type used) | 47 30 02 | |
| | | Indicating Lights | 2 (each colour and type used) | 47 30 02 | |
| | | Fuse Holders | 2 (each type used) | 47 30 02 | |
| | | Push Button | 1 (each type used) | 47 30 02 | |
| | | Selector Switch | 1 (each type used) | 47 30 02 | |
| | | I/O Cards | N/A | 47 30 02 | Rockwell Automation |
| 2 | Level Bulbs | N/A | - | 47 30 03 | ENM-10 Level Regulator |
| 3 | Level Switches | N/A | - | 47 30 03 | |
| 4 | Ultrasonic Level Transmitter/Transducer | N/A | - | 47 30 03 | Veolia (Mectron)/Napier-Reid |
| 5 | Strobes and Horns | N/A | - | 47 30 03 | AST Applied Strobe Technology; Rockwell |
| 6 | Ambinet Temperture Transmitters | N/A | - | 47 30 03 | Thermo Kinetics Measurement & Control |
| 7 | Ambient H2S Gas Detection | N/A | - | 47 30 03 | Contro-Valve |
| 8 | Magnetic Flow Meter | N/A | - | 47 30 03 | Endress + Hauser |
| 9 | Mass Flow Meter | N/A | - | 47 30 03 | |
| 10 | Dissolved Oxygen Analyzer | N/A | - | 47 30 03 | |
| 11 | CH4 Gas Detection | N/A | - | 47 30 03 | |
| 12 | Pressure Switches | N/A | - | 47 30 03 | |
| 13 | SCADA Equipment | SCADA Printer Toner Cartridge | - | 47 30 03 | |

**CONTRO VALVE**

**Contro Valve Equipment inc. / Les Équipements Contro Valve inc.**
Brandon, MB • Brossard, QC • Burlington, ON • Fredericton, NB • Halifax, NS Québec, QC • Sarnia, ON • St. John's, NL • Sudbury, ON •Thunder Bay, ON • Vancouver, BC

Intertek

| | |
|---|---|
| **Soumission :** | **19HA1029-1** |
| **Date** (aaaa/mm/jj) | **2019/11/05** |

*S'il vous plaît se référer à ce numéro lors de la commande*
**www.controvalve.com**

| | |
|---|---|
| **À l'attention :** | Hugo Chartier |
| **Compagnie :** | Norclair Inc. |
| **Adresse :** | 3065 peugeot bureau 101<br>Laval QC<br>Canada H7L 5C4 |
| **Référence :** | IQA15-4964-C Iqaluit WWTP |
| **Téléphone :** | (450) 688-4012 ,706 |
| **Courriel :** | hchartier@norclair.ca |

| | |
|---|---|
| **Créer par :** | Hugues Almeida |
| **Courriel :** | halmeida@controvalve.com |
| **Adresse :** | 9610 B Ignace<br>Brossard QC<br>Canada, J4Y 2R4 |
| **Représentant :** | Marc-André Ouellette & Hugues Joannis |
| **Téléphone :** | 450-444-5858 |

***Suite à votre demande, il nous fait plaisir de vous faire parvenir la présente soumission.***

** Les commandes placées avant la date d'expiration seront facturées au prix soumissionné*

** Taxes sur la vente, frais de douanes ou tout autres frais ne sont pas inclus dans cette soumission*

** Prière de nous faire parvenir votre bon de commande ainsi que notre # de soumission comme référence au BrossardPO@controvalve.com*

| LIVRAISON | VALIDE POUR | EX WORKS | TERMES |
|---|---|---|---|
| 4-5 Sem. | 30 Jours | Brossard, QC | Net 30 |
| | | ** Collect* | ** Sujet à l'approbation de crédit* |

***Sous réserve de vente***

En espérant que cette soumission réponde à tous vos besoins. N'hésitez pas à nous contacter pour toutes autres demandes d'informations.Merci pour votre intérêt envers nos produits.Veuillez visiter notre site web afin de vous procurer une copie de nos termes et conditions.

**CONTRO VALVE**

**Contro Valve Equipment inc. / Les Équipements Contro Valve inc.**

Brandon, MB • Brossard, QC • Burlington, ON • Fredericton, NB • Halifax, NS Québec, QC • Sarnia, ON • St. John's, NL • Sudbury, ON •Thunder Bay, ON • Vancouver, BC

Intertek

**Soumission : 19HA1029-1**
**Date (aaaa/mm/jj) : 2019/11/05**

*S'il vous plaît se référer à ce numéro lors de la commande*
**www.controvalve.com**

# * * SPARE PART ULTIMA X5000 * *

**1 Pieces de Rechange pour Détecteur de gaz combiné double LEL et H2S** — **Prix unitaire :** $4,330.00 **Qté :** 1 **Prix total :** $4,330.00

**1.1 MSA modèle A-5K-SENS 210F00** — Prix unitaire : $925.00 Qté : 1 Prix total : $925.00

**Desc. :** ULTIMA X5000 Replacement Sensors for HYDROGEN SULFIDE 0-50 PPM

- Gas: 21 HYDROGEN SULFIDE 0-50 PPM
- Material: 0 STAINLESS STEEL
- Approvals: F FM/CSA
- Sensor Body Thread Type: 0 None
- Future Characteristic: 0 None

**Note :**
No need quick purchase, as warranty do not exceed 3 years from date of shipment.

**1.2 MSA modèle A-5K-SENS AA0F10** — Prix unitaire : $1,835.00 Qté : 1 Prix total : $1,835.00

**Desc. :** ULTIMA X5000 Replacement Sensors for COMBUSTIBLE IR 5% METHANE

- Gas: AA COMBUSTIBLE IR 5% METHANE
- Material: 0 Stainless Steel
- Approval: F FM/CSA
- Sensor Body Thread Type: 1 3/4" NPT
- Future Characteristic: 0 None

**Note :**
No need quick purchase, as warranty do not exceed 5 years on electronics and 10 years on IR source bulb.

**1.3 MSA modèle A-X5000-PCB-010** — Prix unitaire : $1,570.00 Qté : 1 Prix total : $1,570.00

**Desc. :** ULTIMA X5000 PCB Replacement Boards

**Note :**
No need quick purchase, as warranty do not exceed 2 years from date of shipment.

# * * SPARE PART A-TRIGARD * *

**1 Pieces de Rechange pour TRIGARD** — **Prix unitaire :** $1,550.00 **Qté :** 1 **Prix total :** $1,550.00

**1.1 MSA modèle A-ULTX-SENS-1600** — Prix unitaire : $775.00 Qté : 1 Prix total : $775.00

**Desc. :** Ultima X Series Hydrogen Sulfide 0-50 ppm Sensor

**Note :**
No need quick purchase, as warranty do not exceed 18 (eighteen) month from date of shipment.

**1.2 MSA modèle A-ULTX-SENS-5700** — Prix unitaire : $775.00 Qté : 1 Prix total : $775.00

**Desc. :** Ultima X Series 57 Carbon Monoxide 0-1000ppm Sensor

**Note :**
No need quick purchase, as warranty do not exceed 18 (eighteen) month from date of shipment.

| LIVRAISON | VALIDE POUR | FONDS | EX WORKS | TERMES | TAXES | GRAND TOTAL |
|---|---|---|---|---|---|---|
| 4-5 Sem. | 30 Jours | CAD | Brossard, QC<br>** Collect* | Net 30<br>** Sujet à l'approbation de crédit* | Extra | |

**SPARE PART ULTIMA X5000 : $4,330.00** **SPARE PART A-TRIGARD : $1,550.00**

En espérant que cette soumission réponde à tous vos besoins. N'hésitez pas à nous contacter pour toutes autres demandes d'informations.Merci pour votre intérêt envers nos produits.Veuillez visiter notre site web afin de vous procurer une copie de nos termes et conditions.

***Sous réserve de vente***
***En raison de l'extrême volatilité du taux du dollar US contre le dollar canadien, Contro Valve se réserve le droit d'ajuster les prix de vente final si la variance des taux de change est supérieure à +/- 5% à partir de la date de la proposition et la date d'expédition.***

# APPENDIX F

# CONTACT SERVICE INFORMATION

# Iqaluit WWTP
# Instrumentation Supplier Contacts

## Control Panel Equipment

Entreprise LM
3006 Ste-Catherine est, Montreal, Quebes, H1W 1B8
Contact: O. Chalifoux-Lauzon
Phone: (514) 523-2831
Fax: (514) 521-2526

## SCADA Software, PCs, Printer

Entreprise LM
3006 Ste-Catherine est, Montreal, Quebes, H1W 1B8
Contact: Marion FLuery
Phone: (514)-521-0882
Scada Provider: Inductive Automation

## Level FYLGT bulbs

Xylem
Contact: Hugo Chartier
Phone: _____
Model: ENM-10 Level Regulator

## Ultrasonic Level Transmitter/Transducer

VISION Solutions de Procedes
364 Rue Mcarthur, Saint-Laurent, Quebec
Contact : Nacère Irid
Phone : 574-733-1800 #231
Maunfacture: Siemens,
Model: SITRANS LUT420 transmitter
& Echomac XPS transducers

## Level Switch

Endress + Hauser Canada Ltée
1100 Montee Masson, Laval, Québec, Canada
Contact : Hugo Chartier
Phone : 450-688-4012
Manufacture: Endress + Hauser
Model: Liquiphant M FTL51

## Strobes & Horns

Lumen
364 Rue Mcarthur, Saint-Laurent, Quebec
Contact : Anthony Nadji
Phone : 514-493-4127
Maunfacture: AST Applied Strobe Technology; Rockwell
Model: AST-14; 855H

## Temperature Transmitters

Thermo Kinetics Measurement & Control
Contact: Normand Hadd
Phone: (514) 856-0370

## Gas Detection

Contro-Valve
Contact : Marc-André Ouellette
Phone : (514) 217-5072
Model: Ultima X5000; Trigard

## Magnetic Flow Meter

Endress + Hauser Canada Ltée
6800 Côte de liesse, suite 100, Ville Saint-Laurent, Québec, Canada, H4T 2A7
Contact : Éric Carpentier
Phone : 514-733-0254 x2286
Manufacture: Endress + Hauser
Model: Promag W 400

## Thermal Mass Flow Meter

Endress + Hauser Canada Ltée
1100 Montee Masson, Laval, Québec, Canada
Contact : Hugo Chartier
Phone : 450-688-4012
Manufacture: Endress + Hauser
Model: T-Mass 651

## Pressure Transmitter

Endress + Hauser Canada Ltée
1100 Montee Masson, Laval, Québec, Canada
Contact : Hugo Chartier
Phone : 450-688-4012
Manufacture: Endress + Hauser
Model: Cerabar M PMP55

## Dissolved Oxygen Sensor

HACH
Contact :
Phone :
Manufacture: HACH
Model: 9020000, SC200

See Norclair O&M Section 1 for additional Equipment Contacts

# APPENDIX G

# WARRANTIES & CERTIFICATIONS

Arctic Electrical Nunavut Ltd

PO Box 1381, Iqaluit, NU X0A 0H0 -P867-975-3494

# ARCTIC ELECTICAL NUNAVUT LTD.

## LETTER OF WARRANTY

FOR

WASTEWATER TREATMENT PLANT UPGRADE

IQALUIT, NUNAVUT

The control system and electrical installation has been tested and found to be in proper working condition at the time of turnover, and it is guaranteed to be free from any defect in workmanship and material that may develop within a one-year period from date of acceptance.

Any parts or parts of the control system and electrical installation, as defined in the Control System and Electrical Specification, that prove defective within one-year period shall be replaced without charge, when subjected to examination by one of our representatives and, in our opinion, is due to faulty material or workmanship and not caused by tampering, abuse, or misapplication.

This warranty is limited to Divisions 26 and 28 materials and associated equipment, and in no event shall Arctic Electrical Nunavut Ltd. have any liability for consequential damages, expenses or lost revenue due an electrical system failure. Any alterations to the system without the expressed written consent from Arctic Electrical Nunavut Ltd. will render this warranty null and void.

Arctic Electrical Nunavut Ltd.

Arctic Electrical Nunavut Ltd

PO Box 1381, Iqaluit, NU X0A 0H0 -P867-975-3494

# Permits

26-Jul-2018

# Government of Nunavut

## Department of Community and Government Services

| Baffin Region | Kivalliq Region | Kitikmeot Region |
|---|---|---|
| P.O. Box 1000 Station 610<br>Iqaluit, NU<br>X0A 0H0<br>Phone: (867) 975-5423<br>Fax: (867) 975-5453 | Bag 002<br>Rankin Inlet, NU<br>X0C 0G0<br>Phone: (867) 645-8179<br>Fax: (867) 645-8196 | Bag 200<br>Cambridge Bay, NU<br>X0B 0C0<br>Phone: (867) 983-4157<br>Fax: (867) 983-4152 |

# PERMIT FOR WIRING INSTALLATION

**FOR USE BY QUALIFIED ELECTRICAL WORKERS**

**Permit Type:** multi/commercial/industrial **Application Date:** 26-Jul-2018

### LOCATION

**Community:** Iqaluit **Location:** Waste Water Treatment Plant **Lot:** **Block:**

### OWNER

**Name:** City of Iqaluit, Eslam Maher **Address:** Iqaluit, Nu X0A0H0 **Phone:** (613) 216-4345 ext **Fax:**

### INSTALLATION DETAILS

**Construction Type:** Addition Service Rating **Phase:** 3Phase
**Plan Review # :** RJK **Voltage:** 347/600
**Power Connection Required:** YES **Amperes:** 400
**Work Description:** Rewiring of Waste Water Plant

### ELECTRICIAN

**Name:** Colin Molloy
**#:** E-0090 **Expiry:** 27-Oct-2018
**Company:** Arctic Electrical **Phone:** (867) 975-3494 ext
**Address:** Box 1381, Iqaluit, NU **Postal:** X0A 0H0 **Fax:** (867) 979-2496

| | |
|---|---|
| **Cost of Installation** (Includes labour, travel, room _board) | **$610,000.00** |
| **Permit Fee** | **$12,852.00** |

I (We) propose to install electrical wiring, apparatus, fittings or alterations, the particulars of which are set out above and hereby certify that this installation will be completed in accordance with the Canadian Electrical Code and Territorial Electrical Protection Act

### OFFICE USE ONLY

**PERMISSION IS HEREBY GRANTED TO DO THE ABOVE WORK PROVIDED IT IS COMMENCED BY Wednesday October 24, 2018 AND COMPLETED NO LATER THAN Friday July 26, 2019**

| | |
|---|---|
| **RECEIPT No.** | **GRN3650965** |
| **PERMIT No.** | **10186** |

Issued By: Jessie Nikki — Issue Date: July 26, 2018

July 26, 2018

30-Jul-2018

# Government of Nunavut

## Department of Community and Government Services


| Baffin Region | Kivalliq Region | Kitikmeot Region |
|---|---|---|
| P.O. Box 1000 Station 610<br>Iqaluit, NU<br>X0A 0H0<br>Phone: (867) 975-5423<br>Fax: (867) 975-5453 | Bag 002<br>Rankin Inlet, NU<br>X0C 0G0<br>Phone: (867) 645-8179<br>Fax: (867) 645-8196 | Bag 200<br>Cambridge Bay, NU<br>X0B 0C0<br>Phone: (867) 983-4157<br>Fax: (867) 983-4152 |


# ELECTRICAL INSPECTION REPORT

**PERMIT: 10186**

**INSTALLATION**

**Location**

Community: Iqaluit
Street: Waste Water Treatment Plant
Lot: Block:
Owner: CITY OF IQALUIT, Eslam Maher
Phone: (613) 216-4345 ext:
Fax:

**Permit**

PermitType: multi/commercial/industrial
Amperes: 400
Voltage: 347/600

**Contractor**

Name: Colin Molloy
#: E-0090
Company: Arctic Electrical
Address: Box 1381
Iqaluit, NU
Postal: X0A 0H0

**INSPECTION**

Date: 30-Jul-2018
Type: Power
Corrections Due By:
Inspector: Rick Kelly
Outcome: Not Complete
Fee: NO

**DEFICIENCIES**

| CEC Section | Details | Status | Date |
|---|---|---|---|
| 3-002 | Power connection approval is granted | Open | 30-Jul-2018 |

Please sign and return corrected deficiencies by the date listed above _____

Contractor Signature

10-Dec-2018

# Government of Nunavut

## Department of Community and Government Services


| Baffin Region | Kivalliq Region | Kitikmeot Region |
|---|---|---|
| P.O. Box 1000 Station 610 | Bag 002 | Bag 200 |
| Iqaluit, NU | Rankin Inlet, NU | Cambridge Bay, NU |
| X0A 0H0 | X0C 0G0 | X0B 0C0 |
| Phone: (867) 975-5423 | Phone: (867) 645-8179 | Phone: (867) 983-4157 |
| Fax: (867) 975-5453 | Fax: (867) 645-8196 | Fax: (867) 983-4152 |


# ELECTRICAL INSPECTION REPORT

**PERMIT: 10186**

## INSTALLATION

**Location**

Community: Iqaluit
Street: Waste Water Treatment Plant
Lot: Block:
Owner: CITY OF IQALUIT, Eslam Maher
Phone: (613) 216-4345 ext:
Fax:

**Permit**

PermitType: multi/commercial/industrial
Amperes: 400
Voltage: 347/600

**Contractor**

Name: Colin Molloy
# E-0090
Company: Arctic Electrical
Address: Box 1381 Iqaluit, NU
Postal: X0A 0H0

## INSPECTION

Date: 30-Jul-2018
Type: Power
Corrections Due By:
Inspector: Rick Kelly
Outcome: Not Complete
Fee: NO

## DEFICIENCIES

| CEC Section | Details | Status | Date |
|---|---|---|---|
| 3-002 | Power connection approval is granted | Corrected | 30-Jul-2018 |

Please sign and return corrected deficiencies by the date listed above _____
Contractor Signature

**CONTRO VALVE**

**Contro Valve Equipment inc. / Les Équipements Contro Valve inc.**
Brandon, MB • Brossard, QC • Burlington, ON • Fredericton, NB • Halifax, NS Québec, QC • Sarnia, ON • St. John's, NL • Sudbury, ON •Thunder Bay, ON • Vancouver, BC

Intertek

| | |
|---|---|
| **Soumission :** | **19HA1029-1** |
| **Date** (aaaa/mm/jj) | **2019/11/05** |

*S'il vous plaît se référer à ce numéro lors de la commande*
**www.controvalve.com**

| | |
|---|---|
| **À l'attention :** | Hugo Chartier |
| **Compagnie :** | Norclair Inc. |
| **Adresse :** | 3065 peugeot bureau 101<br>Laval QC<br>Canada H7L 5C4 |
| **Référence :** | IQA15-4964-C Iqaluit WWTP |
| **Téléphone :** | (450) 688-4012 ,706 |
| **Courriel :** | hchartier@norclair.ca |

| | |
|---|---|
| **Créer par :** | Hugues Almeida |
| **Courriel :** | halmeida@controvalve.com |
| **Adresse :** | 9610 B Ignace<br>Brossard QC<br>Canada, J4Y 2R4 |
| **Représentant :** | Marc-André Ouellette & Hugues Joannis |
| **Téléphone :** | 450-444-5858 |

***Suite à votre demande, il nous fait plaisir de vous faire parvenir la présente soumission.***

** Les commandes placées avant la date d'expiration seront facturées au prix soumissionné*

** Taxes sur la vente, frais de douanes ou tout autres frais ne sont pas inclus dans cette soumission*

** Prière de nous faire parvenir votre bon de commande ainsi que notre # de soumission comme référence au BrossardPO@controvalve.com*

| LIVRAISON | VALIDE POUR | EX WORKS | TERMES |
|---|---|---|---|
| 4-5 Sem. | 30 Jours | Brossard, QC | Net 30 |
| | | ** Collect* | ** Sujet à l'approbation de crédit* |

***Sous réserve de vente***

En espérant que cette soumission réponde à tous vos besoins. N'hésitez pas à nous contacter pour toutes autres demandes d'informations.Merci pour votre intérêt envers nos produits.Veuillez visiter notre site web afin de vous procurer une copie de nos termes et conditions.

**CONTRO VALVE**

**Contro Valve Equipment inc. / Les Équipements Contro Valve inc.**

Brandon, MB • Brossard, QC • Burlington, ON • Fredericton, NB • Halifax, NS Québec, QC • Sarnia, ON • St. John's, NL • Sudbury, ON •Thunder Bay, ON • Vancouver, BC

Intertek

**Soumission : 19HA1029-1**
**Date (aaaa/mm/jj) : 2019/11/05**

*S'il vous plaît se référer à ce numéro lors de la commande*
**www.controvalve.com**

# * * SPARE PART ULTIMA X5000 * *

**1 Pieces de Rechange pour Détecteur de gaz combiné double LEL et H2S** — **Prix unitaire :** $4,330.00 **Qté :** 1 **Prix total :** $4,330.00

**1.1 MSA modèle A-5K-SENS 210F00** — Prix unitaire : $925.00 Qté : 1 Prix total : $925.00

**Desc. :** ULTIMA X5000 Replacement Sensors for HYDROGEN SULFIDE 0-50 PPM

- Gas: 21 HYDROGEN SULFIDE 0-50 PPM
- Material: 0 STAINLESS STEEL
- Approvals: F FM/CSA
- Sensor Body Thread Type: 0 None
- Future Characteristic: 0 None

**Note :**
No need quick purchase, as warranty do not exceed 3 years from date of shipment.

**1.2 MSA modèle A-5K-SENS AA0F10** — Prix unitaire : $1,835.00 Qté : 1 Prix total : $1,835.00

**Desc. :** ULTIMA X5000 Replacement Sensors for COMBUSTIBLE IR 5% METHANE

- Gas: AA COMBUSTIBLE IR 5% METHANE
- Material: 0 Stainless Steel
- Approval: F FM/CSA
- Sensor Body Thread Type: 1 3/4" NPT
- Future Characteristic: 0 None

**Note :**
No need quick purchase, as warranty do not exceed 5 years on electronics and 10 years on IR source bulb.

**1.3 MSA modèle A-X5000-PCB-010** — Prix unitaire : $1,570.00 Qté : 1 Prix total : $1,570.00

**Desc. :** ULTIMA X5000 PCB Replacement Boards

**Note :**
No need quick purchase, as warranty do not exceed 2 years from date of shipment.

# * * SPARE PART A-TRIGARD * *

**1 Pieces de Rechange pour TRIGARD** — **Prix unitaire :** $1,550.00 **Qté :** 1 **Prix total :** $1,550.00

**1.1 MSA modèle A-ULTX-SENS-1600** — Prix unitaire : $775.00 Qté : 1 Prix total : $775.00

**Desc. :** Ultima X Series Hydrogen Sulfide 0-50 ppm Sensor

**Note :**
No need quick purchase, as warranty do not exceed 18 (eighteen) month from date of shipment.

**1.2 MSA modèle A-ULTX-SENS-5700** — Prix unitaire : $775.00 Qté : 1 Prix total : $775.00

**Desc. :** Ultima X Series 57 Carbon Monoxide 0-1000ppm Sensor

**Note :**
No need quick purchase, as warranty do not exceed 18 (eighteen) month from date of shipment.

| LIVRAISON | VALIDE POUR | FONDS | EX WORKS | TERMES | TAXES | GRAND TOTAL |
|---|---|---|---|---|---|---|
| 4-5 Sem. | 30 Jours | CAD | Brossard, QC<br>** Collect* | Net 30<br>** Sujet à l'approbation de crédit* | Extra | |

**SPARE PART ULTIMA X5000 : $4,330.00** **SPARE PART A-TRIGARD : $1,550.00**

En espérant que cette soumission réponde à tous vos besoins. N'hésitez pas à nous contacter pour toutes autres demandes d'informations.Merci pour votre intérêt envers nos produits.Veuillez visiter notre site web afin de vous procurer une copie de nos termes et conditions.

***Sous réserve de vente***
***En raison de l'extrême volatilité du taux du dollar US contre le dollar canadien, Contro Valve se réserve le droit d'ajuster les prix de vente final si la variance des taux de change est supérieure à +/- 5% à partir de la date de la proposition et la date d'expédition.***

Endress+Hauser
People for Process Automation

**ENDRESS+HAUSER CANADA LTD/LTEE GENERAL TERMS AND CONDITIONS OF SALE**

1. **Acceptance.** The Buyer's purchase order ("Order") constitutes an offer by Buyer to purchase Goods and/or Services in accordance with these Terms and Conditions. The Order shall be deemed to be accepted when Seller issues written acceptance of the Order at which point and on which date the Agreement shall come into existence. Any quotation given by the Seller shall not constitute an offer. It is only valid for a period of 30 days from the date of issue unless the Seller agrees in writing to extend that period.

2. **Buyer's Assent.** Shipment by Seller and acceptance by Buyer of, or payment for all or any part of the Goods (as defined below) and/or Services (as defined below) covered by the Order shall constitute Buyer's assent to all of the Terms herein. Prior to acceptance of Goods and Services by Buyer, Seller may withdraw or modify its conditional acceptance of the Order.

3. **Complete Agreement.** The Agreement along with these Terms (collectively referred to herein as the "Agreement") constitutes the entire agreement between the parties and supersedes all prior agreements with respect to the Goods and Services whether such agreements were written or oral. These Terms apply to the Agreement to the exclusion of any other terms that Buyer seeks to impose or incorporate, or which are implied by trade, custom, practice or course of dealing. These Terms are also available online at www.ca.endress.com. Seller may amend these Terms at any time at its discretion. These Terms shall apply to the supply of both Goods and Services except where application to one or the other is specified. Special terms may apply in respect of software support services and/or other specific services if agreed between the parties.

4. **Modification.** No modification, amendment, extension, renewal, rescission, discharge, abandonment, waiver or other change or alteration shall be valid, enforceable or binding on Seller unless agreed to in writing by Seller. Seller shall not be bound by any additional or different terms, whether printed or otherwise, in the Order or any other communication from Buyer to Seller unless specifically agreed to by Seller in writing. Prior courses of dealing, usage of the trade, and verbal agreements not reduced to writing and signed by Seller, to the extent that they modify, add to, or detract from the Agreement, shall not be binding on the Seller. Seller may, at its option, treat any attempted modification, termination or repudiation by Buyer to which Seller does not assent as a breach of the entire Agreement and claim all proper damages.

5. **Termination.** If all or part of the Agreement is terminated by agreement of the parties, and if there is no contrary written agreement between Seller and Buyer, Buyer shall pay termination charges in the amount equal to the greater of (I) ten (10) percent of the net sales price or (II) (a) the price provided in the Order for all Goods assembled and Services performed prior to the agreement by Seller to terminate, plus (b) the actual expenditures made and liabilities incurred by Seller in connection with any portion of the Goods and Services not yet completed (as evidenced in writing), plus (c) reasonable estimated profit on the not yet completed portion of the Goods and Services.

6. **Price, Payment Terms, and Security Interest.** The price for Goods shall be the price set out in the Order confirmation. The price of the Goods is exclusive of all costs and charges of packaging, insurance, and transport of the Goods. The charges for Services shall be on a time and materials basis and shall be calculated in accordance with Seller's standard daily fee rates and service rate schedule, which is available upon request. The price for Goods and Services are collectively hereinafter also referred to as the "Prices". Seller's Prices may be subject to change and are subject to Seller's standard annual price increases. Seller will notify Buyer of any Price increase. Unless provided otherwise on the face of this Agreement, Buyer shall pay the purchase price for the Goods and Services in full within 30 days from date of shipment. Buyer shall pay all amounts due under this Agreement in full without any set-off, counterclaim, deduction, or withholding except as required by law. Seller may, without limiting its other rights or remedies, set off any amount owing to it by Buyer against any amount payable by Seller to Buyer. All invoices not paid when due will thereafter be subject to a monthly service charge of one and a half percent (1½%) of the unpaid balance. If, in Seller's opinion, there is a material, adverse change in Buyer's financial condition or if Buyer has not, within the agreed time, fully paid for Goods shipped and Services performed under this or any other agreement with Seller, Seller reserves the right to revoke Buyer's credit, to require shipment of Goods C.O.D., and/or suspend performance on this and/or other agreements and/or future shipments. Buyer hereby grants Seller a purchase money security interest in the Goods until the full purchase price is paid, and Buyers appoints Seller as its attorney-in-fact for the purpose of filing any documents necessary or desirable to perfect such security interest in any applicable jurisdiction.

7. **Services**. In the event services are also provided to Buyer by Seller (including, but not limited to the licensing of software), Seller will provide services ("Services") to Buyer in accordance with the Buyer's service specifications and these Terms. However, Seller shall not be obligated to perform Services as a result of malfunctions of the Goods caused by: (a) the deliberate or negligent acts of persons other than the Seller; (b) inadequate facilities of Buyer; (c) systems or equipment outside Seller's control (such as those provided by vendors of utilities), and (d) modifications to the Goods made by a party other than the Seller. Seller shall have the right

to make any changes to the Services that are necessary to comply with any applicable law or safety requirement, or which do not materially affect the nature or quality of the Services, and the Seller shall notify the Buyer in any such event.
Buyer shall provide Seller with reasonable access to its premises as necessary for Seller to perform the Services. At all times Seller's personnel will comply with Buyer's safety and security precautions, procedures, and guidelines. Seller will immediately inform Buyer of any injury or accident occurring on Buyer's premises involving Seller's personnel. Seller will provide Services in a manner as to minimize interference with Buyer's operations. Buyer shall cooperate with the Seller in all matters relating to the Services and provide the Seller with such information and materials as the Seller may reasonably require to supply the Services, and ensure that such information is accurate in all material respects. Seller shall have the right to rely on information and materials provided by Buyer and Seller shall not be liable for Services performed, provided that such Services are provided in accordance with Buyer's specifications. Buyer shall obtain and maintain all necessary licenses, permissions and consents which may be required for the Services to be performed prior to the date on which the Services are to start, and keep and maintain all materials, equipment, documents and other property of the Seller ("Seller Materials") at the Buyer's premises in safe custody at its own risk, and in good condition until returned to the Supplier, and not dispose of or use the Seller Materials other than in accordance with the Seller's written instructions or authorization.

8. **Delivery/Shipment.** Seller shall deliver the Goods to the location as set out in the Order Confirmation (Delivery Location) and in accordance with the INCOTERM referred to in the Order Confirmation (in the absence of written agreement to the contrary) and shall be deemed complete pursuant to the agreed upon delivery terms. If no terms are specified, the delivery terms shall be CPT domestic site (Incoterms 2010). Buyer shall pay all shipping, packing and handling costs and shall bear the risk of loss after Seller completes delivery of the Goods to the carrier. Buyer shall have five (5) days after any full or partial delivery to notify Seller if Buyer's count of delivered Goods does not conform with Seller's count as identified in the itemized packing list accompanying the shipment.

9. **Title.** Title to the Goods shall only pass upon: Shipment of Goods.

10. **Sales or Use Taxes.** In compliance with various provincial sales tax statutes and regulations, Seller will add sales tax to the sale of a taxable order unless Buyer provides documentation that is complete, legally acceptable in form, and valid in accordance with applicable laws and regulations of the province that has jurisdiction over the sales transaction. The jurisdiction province shall be the province of Ontario. Buyer shall be held liable to Seller for monies due for sales tax if a subsequent tax audit determines that Buyer provided incomplete or invalid documentation, unless Buyer provides additional documentation to correct any deficiencies in the original documentation in accordance with applicable provincial laws and regulations and audit requirements.

11. **Time of Delivery.** Shipment and Service schedules are approximate and are based on conditions existing at the time of execution of the Agreement. Seller shall attempt to effect delivery or performance of Services in good faith by the date specified on the Order. Buyer agrees that Seller shall not be responsible or liable for any damages, including but not limited to, direct, indirect, special or consequential damages, arising from any shipment of nonconforming Goods, or any delay in delivery of Goods or performance of Services, or any failure to deliver Goods in quantities and at times specified. In such cases, Seller reserves the right to terminate the Agreement or to reschedule delivery within a reasonable time, and Buyer agrees that such termination or rescheduling shall not be considered a breach of the Agreement. In no event shall Seller be liable for incidental or consequential damages resulting from failure to meet requested delivery schedules. Goods and Services shall be deemed accepted when received by Buyer or upon completion of Services, respectively. Buyer's revocation of acceptance, if any, must be made in writing within fifteen (15) business days after receipt of the Goods or completion of the Services. The writing must specify Buyer's reason for revocation of acceptance. The terms of this section do not limit or affect Buyer's rights or Seller's warranty obligations specified hereunder.

12. **Returns.** Except for the return of nonconforming and defective Goods, all returns of Goods shall be made in strict compliance with Seller's Return Policy as may be in effect from time to time, a written copy of which is available to Buyer upon request.

13. **Storage Fees.** If Buyer requests deferral of shipment, or fails to provide information, material or documentation required by this Agreement and as a result Goods are placed in storage, storage fees will commence immediately following the scheduled ship date unless extended in writing. The Buyer will be charged a storage fee equal to Seller's actual cost to store the Goods. These charges will be invoiced to Buyer separately from the actual shipment and shall be paid in full by Buyer within thirty (30) days of date of invoice.

14. **Specifications.** Goods and Services shall be deemed to be in conformity herewith if they conform to the specifications provided by Buyer. In the event ambiguities, discrepancies, or express conflicts exist between the specifications and any other item purporting to describe or define the Goods or Services, including but not limited to drawings, photographs, models or other documentation, the specifications shall control unless otherwise agreed to in writing by Seller. Buyer agrees that Seller shall have no responsibility to identify or notify Buyer of any such ambiguity, discrepancy, or conflict. Seller reserves the right to amend the specification of the Goods if required by any applicable statutory or regulatory requirements.

15. **Nonconforming Goods.** Seller reserves the right to cure any shipment of nonconforming Goods. At the option of Seller, Buyer's remedies for nonconforming Goods shall be limited to the repair or replacement of the nonconforming Goods, and if repair or replacement is not possible, return of the nonconforming Goods and repayment of any portion of the purchase price paid.

16. **Seller's Express Warranty.** Seller warrants the Goods to meet the specifications provided in the Order and to be free from defects in materials and workmanship under normal use and service for a period of one year from time of shipment. Seller further warrants that for a period of one year from time of completion of Services, Services will conform to the specifications set forth in the Order and that Seller will perform Services in a professional and workmanlike manner in accordance with all applicable laws and regulations. Buyer agrees that it has the sole responsibility for the proper selection application, installation, use and instructions (concerning use, application, periodic maintenance, and cautions of the Goods) to ultimate users of the Goods and Services. Buyer agrees that the warranty provided herein shall not apply to any Goods or Services which: (1) have been repaired or altered outside of Seller's factory in any way so as, in Seller's judgment, to affect such Goods' or Services' reliability; (2) have been subject to misuse, negligence, or accident; (3) have been operated other than in accordance with the printed instructions prepared by Seller and provided by Seller with the Goods or Services; or (4) have been subject to abnormal wear of wetted parts caused by Buyer's application of the Goods. Furthermore, Buyer acknowledges that repairs performed by Buyer or others are not warranted by Seller, and that third party equipment shall be subject to the warranties provided therewith. Notwithstanding anything to the contrary herein, it is understood and agreed that the provisions of the Ontario Sale of Goods Act, the Ontario Consumer Protection Act, and similar legislation throughout Canada are hereby waived by the Customer.

17. **Seller's Exclusive Obligations under Warranty.** Seller shall re-perform, at Seller's sole cost and expense, any Services which do not comply with the applicable warranties specified hereof. At Seller's option, Seller may repair, replace, or refund the purchase price of Goods. Goods shall be returned to Seller no later than one month after the expiration of the applicable warranty period and in the manner set forth in this clause and in a manner in which Seller's examination shall disclose to Seller's satisfaction that Goods are defective as specified in the warranty clause hereof. All allegedly defective Goods shall be returned to the Seller at Buyer's expense and risk. All such defective or nonconforming Goods shall be returned to Seller at Burlington, Ontario, freight prepaid, unless otherwise agreed by the parties in writing, and shall be accompanied or preceded by a particularized statement of the claimed defect. Under such circumstances, freight charges to and from Seller and risk of loss shall be borne by Buyer. Seller shall bear the cost of repair or replacement and the risk of loss while the Goods are in Seller's possession at Seller's plant. If Goods are returned without being preceded or accompanied by a written statement of the claimed defect, Seller shall hold the Goods pending receipt of Buyer's statement of defect, provided that, prior to such receipt, risk of loss of the Goods shall remain with the Buyer.

18. **Limitation of Remedies**. SELLER'S OPTION TO REPAIR, REPLACE OR REFUND THE PURCHASE PRICE FOR GOODS OR RE-PERFORM SERVICES IS BUYER'S EXCLUSIVE REMEDY AGAINST SELLER WHETHER SUCH REMEDY ARISES OUT OF BUYER'S CLAIM FOR BREACH OF WARRANTY, BREACH OF CONTRACT OR ANY OTHER CLAIM WITH RESPECT TO THE GOODS AND SERVICES AND SELLER SHALL NOT BE LIABLE FOR ANY CONSEQUENTIAL OR INCIDENTAL DAMAGES, DIRECT, INDIRECT, SPECIAL, CONSEQUENTIAL (INCLUDING LOSS OR PROFIT OR OTHER ECONOMIC LOSS) OR OTHER DAMAGES, REGARDLESS OF THE FORM OF ACTION, WHETHER IN CONTRACT, TORT, STRICT PRODUCTS LIABILITY, OR OTHERWISE, EVEN IF BUYER HAS BEEN ADVISED OF THE POSSILITY OF SUCH DAMAGES ARISING OUT OF THE FURNISHING, PERFORMANCE, USE OF, OR PROVIDING THE GOODS AND/OR SERVICES IN CONNECTION WITH THIS AGREEMENT. THE PARTIES AGREE THAT CONSEQUENTIAL DAMAGES FOR PURPOSES OF THIS AGREEMENT REPRESENT ANY DAMAGES OTHER THAN THE COST TO REPAIR, REPLACE OR REFUND THE PURCHASE PRICE OF THE GOODS WITH RESPECT TO WHICH THE LOSS OCCURRED.

19. **Seller's Disclaimer of Implied Warranties.** SELLER'S EXPRESS WARRANTIES ARE IN LIEU OF ALL OTHER WARRANTIES, AND SELLER HEREBY DISCLAIMS ANY OTHER EXPRESS OR IMPLIED WARRANTIES, INCLUDING WITHOUT LIMITATION ANY IMPLIED WARRANTY OF MERCHANTABILITY OR FITNESS FOR A PARTICULAR PURPOSE. BUYER AGREES THAT MODELS OR SAMPLES SHOWN TO BUYER, IF ANY, WERE USED MERELY TO ILLUSTRATE THE GOODS AND NOT TO REPRESENT, PROMISE, OR GUARANTEE THAT ANY GOODS DELIVERED HEREUNDER WOULD CONFORM TO SUCH MODELS OR SAMPLES. SELLER'S AGENTS HAVE NO AUTHORITY TO GIVE WARRANTIES BEYOND THOSE PROVIDED IN THIS LIMITED EXPRESS WARRANTY.

20. **Indemnification.** Buyer agrees to indemnify and hold harmless Seller against all damages, costs, expenses and attorney's fees arising from claims of infringement of patents, designs, copyrights or trademarks with respect to all Goods manufactured or assembled either in whole or in part to Buyer's specifications. Buyer agrees that such infringement shall be deemed a breach of the Agreement. Seller further reserves the right to terminate the Agreement for Goods which, in the opinion of Seller, infringe upon any patent, design, copyright or trademark in their manufacture, sale and/or use, and Buyer agrees that such termination shall not be considered a breach by Seller of the Agreement. Buyer further agrees that Seller shall not be liable under this provision if the Goods or Services are

altered or modified in any manner after Seller delivers such Goods to the carrier for delivery to Buyer or completes performance of any Services.

21. **Import and Export Compliance.** Buyer is solely responsible for compliance with all applicable import and export control laws, in any jurisdiction, relating to the Goods and Services. Buyer shall undertake all necessary actions to comply with such laws, including, but not limited to, processing of all necessary customs procedures, payment of import/export duties and import/export taxes, completion and maintenance of documentation and provision of accurate information to all customs authorities. Buyer shall indemnify and hold harmless Seller against all damages, costs, expenses and attorney's fees arising from or alleged to arise from any violation, alleged violation, or failure to comply with, the terms of this provision by Buyer or any person for whom Buyer may be responsible.

22. **Buyer Default.** Seller shall have the unrestricted right, upon written notice to Buyer, to declare a default ("Buyer Default") hereunder and to terminate this Agreement if any of the following events occur: 1) Buyer's failure to comply with any of the provisions, terms and conditions of this Agreement, including without limitation, Buyer's failure to timely pay for any Goods or Services delivered to Buyer; 2) Seller's ability to perform of any of its obligations in respect of Services is prevented or delayed by any act or omission by Buyer or failure by Buyer to perform any relevant obligation, after a reasonable opportunity to cure such Buyer's failure to perform or act or omission; 3) Dissolution, insolvency, appointment of a receiver, assignment for the benefit of creditors or the commencement of any proceeding under any bankruptcy or insolvency laws by or against the Buyer; or 4) Seller's determination, in its sole discretion, that Buyer's financial condition is such as to endanger Buyer's performance hereunder.

23. **Remedies Upon Buyer's Default.** Upon Buyer's Default and Seller's written notice thereof to Buyer, every obligation of Seller hereunder shall immediately terminate and Seller shall have all rights and remedies existing at law or in equity, including but not limited to those provided by the Uniform Commercial Code as adopted in Ontario, and Buyer shall reimburse Seller on written demand for any costs or losses sustained or incurred by Seller arising directly or indirectly from the Buyer Default. Seller shall also have the right to suspend performance of any Services until Buyer remedies such Buyer Default, and to rely on the Buyer Default to relieve it from the performance of any of its obligations to the extent the Buyer Default prevents or delays Seller's performance of any of its obligations.

24. **Governing law**
This agreement and any dispute or claim arising out of or in connection with it or its subject matter or formation (including non-contractual disputes or claims) shall be governed by and construed in accordance with the laws of Ontario and Canada [law of your country].

25. **Jurisdiction**
Each party irrevocably agrees that the Ontario and Canada [courts of your country] shall have exclusive jurisdiction to settle any dispute or claim arising out of or in connection with this Contract or its subject matter or formation (including non-contractual disputes or claims).

26. **Reservation of Rights.** Buyer agrees that Seller's forbearance, delay or failure to exercise any right or remedy hereunder shall not constitute a waiver of such right or remedy and that Seller's exercise or partial exercise of any right or remedy shall not preclude further exercise of such right or remedy or any other right or remedy.

27. **Costs of Enforcement.** Buyer agrees to pay Seller's reasonable expenses, including reasonable attorney's fees and costs, incurred in enforcing the terms herein.

28. **Choice of Law and Venue.** The Agreement shall be governed by the laws of the province of Ontario, excluding its provisions on conflicts of law. Exclusive venue of any dispute or action arising out of this Agreement will lie in any province or federal court of competent jurisdiction in Burlington, Ontario.

29. **Severability of Clauses.** Buyer agrees that the invalidity or unenforceability of any of the clauses or terms herein shall not affect the validity or enforceability of any other clauses or terms hereof. Sections 15-20, 28 and 30, and any other clause as the context implies, shall survive the termination or expiration of this Agreement.

30. **Alternative Dispute Resolution.** If a dispute arises between the parties, the parties agree to use the following alternative dispute resolution ("ADR") procedure prior to either Party pursuing other available remedies:
1) A meeting shall be held promptly between the parties, attended by individuals with decision-making authority regarding the dispute, to attempt in good faith to negotiate a resolution of the dispute.

2) If, within thirty (30) days after such meeting, the parties have not succeeded in negotiating a resolution of the dispute, they will jointly appoint a mutually acceptable neutral person not affiliated with either of the parties to act as a mediator. If the parties are unable to agree on the neutral person within twenty (20) days, they shall seek assistance in such regard from ADR Chambers of Canada ("ADRCC"). The fees of the neutral person and all other common fees and expenses shall be shared equally by the parties.
3) The mediation may proceed in accordance with ADRCC's Mediation Rules. The parties shall pursue mediation in good faith and in a timely manner. In the event the mediation does not result in resolution of the dispute within sixty (60) days, then, upon seven (7) days' written notice to the other party either party may suggest another form of ADR, *e.g.*, arbitration, a mini-trial or a summary jury trial, or may pursue other available remedies.

31. **Confidentiality.** The parties agree to treat the Order, this Agreement, and any contract formed upon its acceptance as confidential and shall not disclose the existence or substance hereof to any third party. If in connection with the provision of goods or services hereunder a party (each one a "Recipient" as applicable to this provision) becomes aware of or receives any confidential information of the other party (each one a "Discloser" as applicable to this provision), Recipient agrees not to disclose such information to any third party or to make use of such information, except to the extent necessary to perform hereunder or as required by law. Upon Discloser's request, Recipient shall promptly return to Discloser all Confidential Information in tangible form. The parties agree that any disclosure or use of the other party's Confidential Information, except as otherwise authorized herein or by Discloser in writing, would be wrongful and cause immediate and irreparable injury to Discloser. Recipient agrees to immediately notify Discloser of any unauthorized disclosure or use of any Discloser's Confidential Information of which Recipient becomes aware. This clause shall survive termination of this Agreement.

32. **Independent Contractors.** In performing its obligations to Buyer, hereunder, Seller is acting as an independent contractor and neither party is an agent or representative of the other. Neither party is authorized to make any representations or assume or create any obligations on behalf of the other.

33. **Limitation of Liability.** NOT WITHSTANDING THE OTHER PROVISIONS OF THIS AGREEMENT TO THE CONTRARY, THE AGGREGATE LIABILITY OF EACH PARTY TO THE OTHER PARTY FOR ANY AND ALL CLAIMS AND LIABILITIES ARISING OUT OF OR RELATING TO THIS AGREEMENT OR TO THE BUYER'S OR SELLER'S RIGHTS AND OBLIGATIONS HEREUNDER, WHETHER BASED ON A THEORY OF CONTRACT, TORT, STRICT LIABILITY, OR OTHERWISE, SHALL NOT EXCEED THE PRICE OF THE GOODS OR SERVICES. IN NO EVENT SHALL SELLER'S LIABILITY TO BUYER EXTEND TO INCLUDE INCIDENTAL, INDIRECT, CONSEQUENTIAL OR PUNITIVE DAMAGES. THE TERM "CONSEQUENTIAL DAMAGES" SHALL INCLUDE BUT NOT BE LIMITED TO, LOSS OF ANTICIPATED PROFITS, REVENUE OR USE AND COSTS INCURRED. THIS CLAUSE SHALL SURVIVE TERMINATION OF THIS AGREEMENT.

34. **Compliance with Governing Laws and Regulations.** The Parties acknowledge and agree that all business activities shall be conducted ethically, with integrity, and in full compliance with both the letter and the spirit of the laws and regulations applicable to those activities. This commitment applies without limitation to the award of contracts/subcontracts on an impartial/competitive basis, personal business conduct, internal control systems, the offering/giving/receiving of gifts or anything of value, and correct documentation and registration of financial accounts. Neither Buyer nor its employees are authorized to operate on Seller's behalf in an illegal manner or in contrast with Seller's business-conduct policies and vice-versa. Should a Party ever receive, directly or indirectly from any of the other Party's representatives or agents, a request that the Party believes is contrary to the provisions of this clause, that Party shall immediately notify the other Party's general counsel.
Without limiting the generality of the foregoing or the effect of any other provision of this Agreement, and to the extent either Party performs any work or obtains or sells any of the products in relation to this Agreement in or from a foreign country:
a. Each Party represents and warrants that it is familiar with the Corruption of Foreign Public Officials Act ("the CFPOA"), and the Criminal code of Canada (the "Criminal Code"), as amended,. Each Party further represents that, in particular, it is familiar with the prohibitions of the CFPOA and the Criminal Code against offering, paying or giving anything of value, either directly or indirectly, to foreign or domestic officials (including employees of state-owned or controlled enterprises), candidates or political parties for the purpose of securing any improper advantage for a company, including assisting a company in obtaining or retaining business.
b. Each Party agrees that it shall not make any offer, payment, promise to pay, gift, or promise to give monies or anything of value; nor authorize any such offer, payment, promise to pay, gift, or promise to give by anyone acting for or on behalf of itself or the other Party; to any government official, any political party or official thereof, any candidate for political office, any official of a public international organization, or any other person that is contrary to the provisions of the CFPOA or the Criminal Code, as amended.
c. Each Party agrees that it shall not make any offer, payment, promise to pay, gift, or promise to give monies or anything of value; nor authorize any such offer, payment, promise to pay, gift, or promise to give by anyone acting for or on behalf of itself or the other Party; to any employee of a private company in order to improperly induce that employee to provide any competitive advantage to either Party in selling products or services or in otherwise doing business with that company.

d. Each Party agrees to maintain records for 5 years and present them for auditing upon demand by the other Party if there is any suspicion that a violation of this provision 33 may have occurred.
e. Both Parties represent that neither it nor any of its directors, officers, or employees is a government official, including without limitation an official or employee of any government, an official of a political party, or a candidate for political office, or a director, officer, employee, or "affiliate" (as defined in the CFPOA) of a government instrumentality. Both Parties understand that for purposes of this agreement, a "government official" may include an employee or official of a commercial entity or a university or institute of higher learning in which a government body has an ownership interest or exerts control over the activities of such entity, as well as officials and employees of public international organizations.
Each Party acknowledges that the representations and warranties provided in this clause are material to this Agreement. These representations shall be deemed to be continuing in effect throughout the term of the Agreement. Both Parties shall promptly advise each other of any change in circumstances which may affect the continuing validity of their representations. Either Party may terminate this Agreement at any time, without any liability or obligations to the other Party, if that Party believes, in good faith, that the other Party has violated any provisions of this clause. Any action by either Party which would or might constitute a violation of the CFPOA or the Criminal Code, as amended, or a request for such action from or by a representative of either Party shall result in immediate termination of this Agreement without further liability or obligation of the other Party.

35. **Force Majeure.** The Seller will not be responsible or liable in any way for delay or failure to effect delivery of Goods and Services pursuant to its obligations under this Agreement in which effectuation is hindered or prevented by conditions reasonably beyond its control, acts of God, fire, flood, other weather conditions, war, embargo, explosions, riots, laws, rules, regulations, or orders of any governmental authority.

36. **Assignment.** This Agreement may not be assigned by either Party to any third party without the prior written consent of the other Party hereto; provided, however, that a Party may assign its rights and obligations hereunder by written notice to the other Party to (a) any Affiliate or (b) a successor or transferee (whether by merger, consolidation, purchase or otherwise) of either (i) all or substantially all of the assets of the assignor, or (ii) all or substantially all of the assets of the business to which it pertains; and provided such party is not a competitor of the non-assignor. Any purported assignment in violation of the preceding shall be void. Any permitted assignee shall assume all obligations of its assignor under this Agreement. No assignment shall relieve a Party of responsibility for the performance of any obligation which accrued prior to the effective date of such assignment.

37. **Intellectual Property.** All Intellectual Property Rights in or arising out of or in connection with this Agreement and/or the Services shall be owned by Seller.

38. **General Definitions.**
a) Agreement: means the receipt and acceptance by Seller of the Order along with these Standard Sales and Service Terms and Conditions, Sellers' invoices, delivery forms, or other Seller documents related to the Order.
b) Goods: means any and all goods purchased by Buyer from Seller in connection with this Agreement and as specified in the Order.
c) Intellectual Property Rights: means patents, inventions, copyright and related rights, trademarks, trade names, business and domain names, goodwill, designs, database rights, processes, know-how, trade secrets, computer technical expertise, general product and process expertise, software and other intellectual property independently developed, owned, and/or controlled by Seller and any improvements thereto which are used, improved, modified, or further developed by Seller during its performance under this Agreement, in each case whether registered or unregistered and including all applications and rights to apply for and be granted, renewals or extensions of, and right to claim priority from, such rights and all similar or equivalent rights or forms of protection which subsist or will subsist now or in the future in any part of the world, shall be and remain the property of Seller.
d) Services: means any and all services, including any deliverables, purchased by Buyer from Seller in connection with this Agreement and as specified in the Order.

**39. Language.**
The parties acknowledge that they have required that the agreement evidenced hereby be drawn up in English. Les parties reconnaissent avoir exigé la rédaction en anglais du Contrat. In the event of a conflict between the English and other language versions, the English version will prevail.

Iqaluit WWTP, Fixed gas detectors warranty, Controvalve

## ULTIMA X5000 spare sensors and PCB board warranty

**Product Warranty**

| ITEM | WARRANTY PERIOD |
|---|---|
| ULTIMA X5000 Gas Monitor | MSA warrants that this product will be free from mechanical defects and faulty workmanship for the period specified in this table for each component, provided it is maintained and used in accordance with MSA's instructions and/or recommendations. Guarantee shall not exceed the indicated warranty period plus six months from the date of manufacture. |
| Main Transmitter Housing and PCBA | 3 years if equipped with a Sunshield. 2 years if not equipped with a Sunshield. |
| XCell Sensors | 3 years from date of shipment. |
| XIR PLUS | 5 years on electronics. 10 years on IR source bulb. |

For Hydrogen Sulfite 0-50 ppm sensor

For IR combustible 0-100% LEL – Methane (5%) sensor

This warranty does not cover filters, fuses, etc. Certain other accessories not specifically listed here may have different warranty periods. This warranty is valid only if the product is maintained and used in accordance with Seller's instructions and/or recommendations. The Seller shall be released from all obligations under this warranty in the event repairs or modifications are made by persons other than its own or authorized service personnel or if the warranty claim results from physical abuse or misuse of the product. No agent, employee or representative of the Seller has any authority to bind the Seller to any affirmation, representation or warranty concerning this product. Seller makes no warranty concerning components or accessories not manufactured by the Seller, but will pass on to the Purchaser all warranties of manufacturers of such components.

**THIS WARRANTY IS IN LIEU OF ALL OTHER WARRANTIES, EXPRESSED, IMPLIED OR STATUTORY, AND IS STRICTLY LIMITED TO THE TERMS HEREOF. SELLER SPECIFICALLY DISCLAIMS ANY WARRANTY OF MERCHANTABILITY OR OF FITNESS FOR A PARTICULAR PURPOSE.**

## TRIGARD spare sensors Warranty

# MSA Instrument Warranty

1. Warranty- Seller warrants that this product will be free from mechanical defect or faulty workmanship for a period of eighteen (18) months from date of shipment or one (1) year from installation, whichever occurs first, provided it is maintained and used in accordance with Seller's instructions and/or recommendations. This warranty does not apply to expendable or consumable parts whose normal life expectancy is less than one (1) year such as, but not limited to, non-rechargeable batteries, sensor elements, filter, lamps, fuses etc. The Seller shall be released from all obligations under this warranty in the event repairs or modifications are made by persons other than its own or authorized service personnel or if the warranty claim results from physical abuse or misuse of the product. No agent, employee or representative of the Seller has any authority to bind the Seller to any affirmation, representation or warranty concerning the goods sold under this contract. Seller makes no warranty concerning components or accessories not manufactured by the Seller, but will pass on to the Purchaser all warranties of manufacturers of such components. THIS WARRANTY IS IN LIEU OF ALL OTHER

   WARRANTIES, EXPRESSED, IMPLIED OR STATUTORY, AND IS STRICTLY LIMITED TO THE TERMS HEREOF. SELLER SPECIFICALLY DISCLAIMS ANY WARRANTY OF MERCHANTABILITY OR OF FITNESS FOR A PARTICULAR PURPOSE.

# CERTIFICATION RECORD

The company named below has been authorized by CSA International to represent the products listed in this record as "CSA Certified" and to affix the CSA Mark to these products according to the terms and conditions of the CSA Service Agreement and applicable CSA program requirements (including additional Markings).

File No: 110537_0_000

Class No: 3211 09 INDUSTRIAL CONTROL EQUIPMENT Special (Custom) Industrial Control Assemblies

SUBMITTOR

4535527
Les Entreprises Electriques L.M. Inc.
3006 Ste Catherine Est
Montreal, QC H1W 2B8
Canada

FACTORIES

4535527
Les Entreprises Electriques L.M. Inc.
3006 Ste Catherine Est
Montreal, QC H1W 2B8
Canada

4883631
Les Entreprises Electriques LM
1450 rue Omer Ravary
Montreal, QC H1W 0A8
Canada

June 5, 2015 (Replaces: April 27, 2005)

- Special industrial control assemblies, enclosed, 600V ac max, 1- or 3-ph, 60Hz, 1200A max input; outputs: 600V ac max., 1- or 3-ph, 1200hp, 1200A, 60Hz, consisting of CSA certified components such as Type 1, 3, 3R, 4, 4X, 12 or open Type enclosures, fuses and circuit breakers, motor starters, contactors, ac/dc drives, programmable logic controllers, transformers, control relays and timers, auxiliary devices.

  - Full voltage and reduced voltage motor starter: 1200hp.
  - Relay-PLC controllers

Note: Open-type equipment is certified only for use in complete assemblies where the suitability of the combination is to be determined.

/ds

# Certificat de Conformité

**Certificat** 1621047 **Contrat Principal:** 163905

**Projet:** 2809532 **Date d'émission:** 5 juin 2015

**Émis à:** **Les Entreprises Electriques L.M. Inc.**
**3006 Ste Catherine Est**
**Montreal, QC H1W 2B8**
**Canada**
**Attention: Alexandre Fortin**

## *Les produits énumérés ci-dessous peuvent porter la marque CSA tel qu'illustré*

Pierre-Luc Avoine

**Émis par:** Pierre-Luc Avoine, ing.

**PRODUITS**

**CLASSE 3211 09** - APPAREILLAGE INDUSTRIEL DE COMMANDE – assemblages spéciaux de contrôle industriel (sur commande)

Ensemble de commande spécial industriel, 600Vca/cc max., 1- ou 3ph, 60Hz, 1200A max à l'entrée; sortie: 600Vca/cc max., 1- ou 3ph, 60Hz, 1200A, 1200hp max., sous coffret CSA de type 1, 3, 4 ou 12 ou de type ouvert, comprenant des composants ordinaires fixes certifiés, notamment des disjoncteurs, des interrupteurs, des fusibles, des transformateurs, des contacteurs, des relais, des démarreurs, des minuteries et d'autres dispositifs auxiliaires.

- Commandes de moteur à tension pleine, 1200hp max.
- Commandes de moteur à tension réduite, 1200hp max.
- Panneaux de contrôles à automates programmables.

Note: Un ensemble de commande type ouvert (sans coffret) est certifié comme composant sujet à réévaluation dans l'application finale.

**EXIGENCES PERTINENTES**

CSA-C22.2 No. 14-13 - Appareillage industriel de commande

Endress+Hauser

People for Process Automation

# Flow Calibration with Adjustment

30446576-4560784

| | |
|---|---|
| 3003322751 | FCP-7.1.B |
| Purchase order number | Calibration rig |
| CA-3006072067-60 / Endress+Hauser Flowtec | 2489.763 us.gal/min ( ≙ 100%) |
| Order N°/Manufacturer | Calibrated full scale |
| 5W4C2H-CKL7/0 | Service interface |
| Order code | Calibrated output |
| Promag W 400 8" | 1.0819 |
| Sensor/Transmitter | Calibration factor |
| N9035816000 | 1 |
| Serial N° | Zero point |
| FQIT-01-150 | 77.4 °F |
| Tag N° | Water temperature |

| Flow [%] | Flow [us.gal/min] | Duration [s] | V target [us.gal] | V meas. [us.gal] | Δ o.r.* [%] | Outp.** [mA] |
|---|---|---|---|---|---|---|
| 40.3 | 1003.41 | 50.1 | 837.280 | 837.098 | -0.02 | 10.45 |
| 40.3 | 1003.38 | 50.1 | 837.125 | 837.240 | 0.01 | 10.45 |
| 101.0 | 2513.83 | 50.1 | 2097.69 | 2097.83 | 0.01 | 20.16 |
| – | – | – | – | – | – | – |
| – | – | – | – | – | – | – |
| – | – | – | – | – | – | – |
| – | – | – | – | – | – | – |
| – | – | – | – | – | – | – |
| – | – | – | – | – | – | – |
| – | – | – | – | – | – | – |

*o.r.: of reading

**Calculated value (4 - 20 mA)

Measured error % o.r.

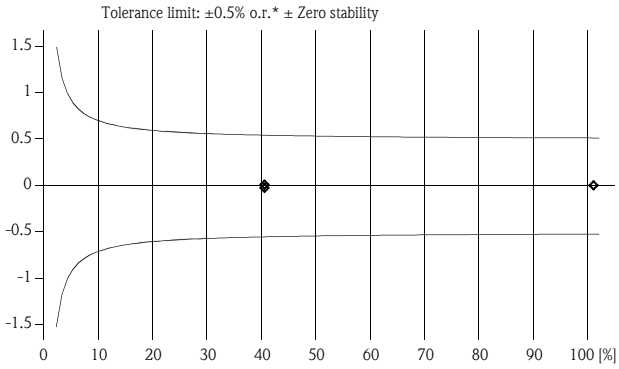


For detailed data concerning output specifications of the unit under test, see Technical Information (TI), chapter Performance characteristics.

The calibration is traceable to the N.I.S.T. through standards certified at preset intervals.

Endress+Hauser Flowtec operates ISO/IEC 17025 accredited calibration facilities in Reinach (CH), Cernay (FR), Greenwood (USA), Aurangabad (IN), Suzhou (CN) and Itatiba (BR).

Robert J. Kizzee

09-12-2018

Date of calibration

Joe Kizzee

Operator

Endress+Hauser Flowtec, Division USA
2330 Endress Place
Greenwood, IN 46143

Certified acc. to
ISO 9001, Reg.-N° 030502.2
ISO 14001, Reg.-N° EMS561046

Endress+Hauser

People for Process Automation

# Flow Calibration with Adjustment

35007983-4800308

| | |
|---|---|
| 3003322751 | FCP-17.A (Air) |
| Purchase order number | Calibration rig |
| 3006184668-150 / Endress+Hauser Flowtec | 3750.0 kg/h ( ≙ 100%) |
| Order N°/Manufacturer | Calibrated full scale |
| 65I-20AA0AD5RABACA | Service interface |
| Order code | Calibrated output |
| t-mass 65 I | 1.165 bar a |
| Transmitter/Sensor | Ambient pressure |
| P40A0A16000 | 7.1 % |
| Serial N° | Ambient relative humidity |
| FQIT-02-152 | 22.3 °C |
| Tag N° | Ambient temperature |

| Flow [%] | Flow target [kg/h] | Flow meas. [kg/h] | Pressure [bar a] | Temp.** [°C] | Δ o.r.* [%] | Outp.** [mA] |
|---|---|---|---|---|---|---|
| 10.0 | 374.692 | 376.573 | 1.173 | 21.9 | 0.50 | 5.61 |
| 31.9 | 1197.67 | 1198.67 | 1.170 | 22.0 | 0.08 | 9.11 |
| 89.7 | 3364.24 | 3359.87 | 1.153 | 21.2 | -0.13 | 18.34 |
| – | – | – | – | – | – | – |
| – | – | – | – | – | – | – |
| – | – | – | – | – | – | – |
| – | – | – | – | – | – | – |
| – | – | – | – | – | – | – |
| – | – | – | – | – | – | – |
| – | – | – | – | – | – | – |

*o.r.: of reading

**Calculated value

Measured error % o.r.

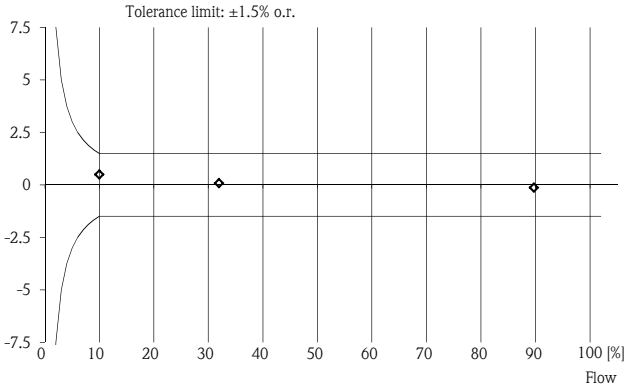


For detailed data concerning output specifications of the unit under test, see Technical Information (TI), chapter Performance characteristics.

Traceability to the national standard for all test instruments used for the calibration is guaranteed.

Endress+Hauser Flowtec operates ISO/IEC 17025 accredited calibration facilities in Reinach (CH), Cernay (FR), Greenwood (USA), Aurangabad (IN), Suzhou (CN) and Itatiba (BR).

04-26-2019

Date of calibration

Derek Martin

Operator

Endress+Hauser Flowtec, Division USA
2330 Endress Place
Greenwood, IN 46143

Certified acc. to
ISO 9001, Reg.-N° 030502.2
ISO 14001, Reg.-N° EMS561046

Endress+Hauser

People for Process Automation

# Flow Calibration with Adjustment

35007982-4800316

| | |
|---|---|
| 3003322751 | FCP-17.A (Air) |
| Purchase order number | Calibration rig |
| 3006184668-150 / Endress+Hauser Flowtec | 3750.0 kg/h ( ≙ 100%) |
| Order N°/Manufacturer | Calibrated full scale |
| 65I-20AA0AD5RABACA | Service interface |
| Order code | Calibrated output |
| t-mass 65 I | 1.164 bar a |
| Transmitter/Sensor | Ambient pressure |
| P40A0C16000 | 7.8 % |
| Serial N° | Ambient relative humidity |
| FQIT-02-156 | 21.7 °C |
| Tag N° | Ambient temperature |

| Flow [%] | Flow target [kg/h] | Flow meas. [kg/h] | Pressure [bar a] | Temp.** [°C] | Δ o.r.* [%] | Outp.** [mA] |
|---|---|---|---|---|---|---|
| 10.0 | 375.733 | 378.490 | 1.172 | 21.3 | 0.73 | 5.61 |
| 32.0 | 1199.59 | 1200.42 | 1.169 | 21.3 | 0.07 | 9.12 |
| 89.4 | 3351.31 | 3354.23 | 1.152 | 20.7 | 0.09 | 18.31 |
| – | – | – | – | – | – | – |
| – | – | – | – | – | – | – |
| – | – | – | – | – | – | – |
| – | – | – | – | – | – | – |
| – | – | – | – | – | – | – |
| – | – | – | – | – | – | – |
| – | – | – | – | – | – | – |

*o.r.: of reading

**Calculated value

Measured error % o.r.

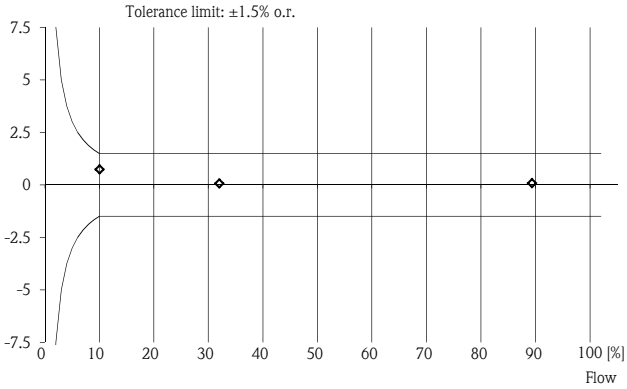


For detailed data concerning output specifications of the unit under test, see Technical Information (TI), chapter Performance characteristics.

Traceability to the national standard for all test instruments used for the calibration is guaranteed.

Endress+Hauser Flowtec operates ISO/IEC 17025 accredited calibration facilities in Reinach (CH), Cernay (FR), Greenwood (USA), Aurangabad (IN), Suzhou (CN) and Itatiba (BR).

04-26-2019

Date of calibration

Endress+Hauser Flowtec, Division USA
2330 Endress Place
Greenwood, IN 46143

Derek Martin

Operator

Certified acc. to
ISO 9001, Reg.-N° 030502.2
ISO 14001, Reg.-N° EMS561046

Endress+Hauser
People for Process Automation

# Flow Calibration with Adjustment

30469876-4799699

| | |
|---|---|
| 3003322751 | FCP-9.B |
| Purchase order number | Calibration rig |
| CA-3006184668-130 / Endress+Hauser Flowtec | 7624.899 us.gal/min ( ≙ 100%) |
| Order N°/Manufacturer | Calibrated full scale |
| 5W4C3F-4497/0 | Service interface |
| Order code | Calibrated output |
| Promag W 400 14" | 0.87138 |
| Sensor/Transmitter | Calibration factor |
| P40A0216000 | 5.7 |
| Serial N° | Zero point |
| FQIT-02-328 | 74.3 °F |
| Tag N° | Water temperature |

| Flow [%] | Flow [us.gal/min] | Duration [s] | V target [us.gal] | V meas. [us.gal] | Δ o.r.* [%] | Outp.** [mA] |
|---|---|---|---|---|---|---|
| 40.2 | 3061.61 | 75.1 | 3830.35 | 3829.88 | -0.01 | 10.42 |
| 40.2 | 3062.04 | 75.1 | 3830.92 | 3831.36 | 0.01 | 10.43 |
| 100.7 | 7675.58 | 75.1 | 9602.34 | 9606.07 | 0.04 | 20.11 |
| – | – | – | – | – | – | – |
| – | – | – | – | – | – | – |
| – | – | – | – | – | – | – |
| – | – | – | – | – | – | – |
| – | – | – | – | – | – | – |
| – | – | – | – | – | – | – |
| – | – | – | – | – | – | – |

*o.r.: of reading

**Calculated value (4 - 20 mA)

Measured error % o.r.

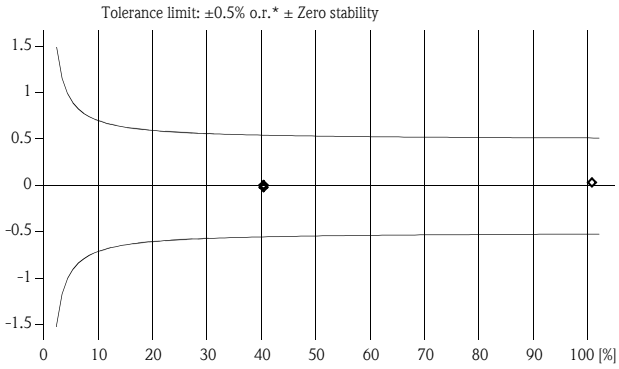


For detailed data concerning output specifications of the unit under test, see Technical Information (TI), chapter Performance characteristics.

The calibration is traceable to the N.I.S.T. through standards certified at preset intervals.

Endress+Hauser Flowtec operates ISO/IEC 17025 accredited calibration facilities in Reinach (CH), Cernay (FR), Greenwood (USA), Aurangabad (IN), Suzhou (CN) and Itatiba (BR).

05-14-2019
Date of calibration

M. Horn
Operator

Endress+Hauser Flowtec, Division USA
2330 Endress Place
Greenwood, IN 46143

Certified acc. to
ISO 9001, Reg.-N° 030502.2
ISO 14001, Reg.-N° EMS561046

Endress+Hauser

People for Process Automation

# Flow Calibration with Adjustment

30469175-4806060

| | |
|---|---|
| 3003322751 | FCP-8.B |
| Purchase order number | Calibration rig |
| CA-3006184668-140 / Endress+Hauser Flowtec | 398.3621 us.gal/min ( ≙ 100%) |
| Order N°/Manufacturer | Calibrated full scale |
| 5W4C80-9F26/0 | Service interface |
| Order code | Calibrated output |
| Promag W 400 3" | 0.93141 |
| Sensor/Transmitter | Calibration factor |
| P5004D16000 | 5.6 |
| Serial N° | Zero point |
| FQIT-03-695 | 74.7 °F |
| Tag N° | Water temperature |

| Flow [%] | Flow [us.gal/min] | Duration [s] | V target [us.gal] | V meas. [us.gal] | Δ o.r.* [%] | Outp.** [mA] |
|---|---|---|---|---|---|---|
| 40.0 | 159.499 | 35.1 | 93.215 | 93.201 | -0.02 | 10.41 |
| 40.3 | 160.526 | 35.0 | 93.761 | 93.776 | 0.02 | 10.45 |
| 100.5 | 400.295 | 35.1 | 233.922 | 233.847 | -0.03 | 20.07 |
| – | – | – | – | – | – | – |
| – | – | – | – | – | – | – |
| – | – | – | – | – | – | – |
| – | – | – | – | – | – | – |
| – | – | – | – | – | – | – |
| – | – | – | – | – | – | – |
| – | – | – | – | – | – | – |

*o.r.: of reading

**Calculated value (4 - 20 mA)

Measured error % o.r.

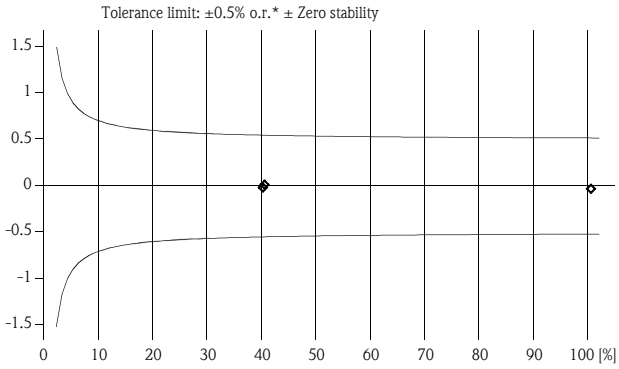


For detailed data concerning output specifications of the unit under test, see Technical Information (TI), chapter Performance characteristics.

The calibration is traceable to the N.I.S.T. through standards certified at preset intervals.

Endress+Hauser Flowtec operates ISO/IEC 17025 accredited calibration facilities in Reinach (CH), Cernay (FR), Greenwood (USA), Aurangabad (IN), Suzhou (CN) and Itatiba (BR).

Robert J. Kizzee

| | |
|---|---|
| 05-06-2019 | Joe Kizzee |
| Date of calibration | Operator |
| Endress+Hauser Flowtec, Division USA<br>2330 Endress Place<br>Greenwood, IN 46143 | Certified acc. to<br>ISO 9001, Reg.-N° 030502.2<br>ISO 14001, Reg.-N° EMS561046 |

Endress+Hauser

People for Process Automation

# Flow Calibration with Adjustment

30469794-4812066

| | |
|---|---|
| 3003322751 | FCP-6.C |
| Purchase order number | Calibration rig |
| CA-3006188887-7 / Endress+Hauser Flowtec | 3.983614 us.gal/min ( ≙ 100%) |
| Order N°/Manufacturer | Calibrated full scale |
| 50H08-HAAA1RA0BAAD+ | Service interface |
| Order code | Calibrated output |
| PROMAG 50 H DN08 / 5/16" | 1.0317 |
| Transmitter/Sensor | Calibration factor |
| P502E916000 | -3 |
| Serial N° | Zero point |
| FQIT-04-798 | 72.7 °F |
| Tag N° | Water temperature |

| Flow [%] | Flow [us.gal/min] | Duration [s] | V target [us.gal] | V meas. [us.gal] | Δ o.r.* [%] | Outp.** [mA] |
|---|---|---|---|---|---|---|
| 40.3 | 1.6052 | 60.0 | 1.6063 | 1.6078 | 0.09 | 10.45 |
| 100.6 | 4.0059 | 85.1 | 5.6850 | 5.6846 | -0.01 | 20.09 |
| 100.7 | 4.0100 | 85.1 | 5.6905 | 5.6907 | 0.00 | 20.11 |
| – | – | – | – | – | – | – |
| – | – | – | – | – | – | – |
| – | – | – | – | – | – | – |
| – | – | – | – | – | – | – |
| – | – | – | – | – | – | – |
| – | – | – | – | – | – | – |
| – | – | – | – | – | – | – |

*o.r.: of reading

**Calculated value (4 - 20 mA)

Measured error % o.r.

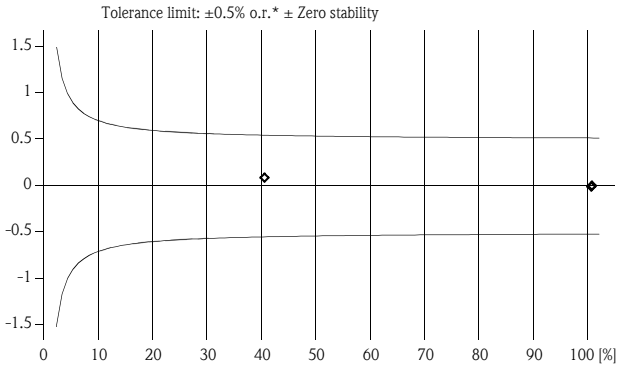


For detailed data concerning output specifications of the unit under test, see Technical Information (TI), chapter Performance characteristics.

The calibration is traceable to the N.I.S.T. through standards certified at preset intervals.

Endress+Hauser Flowtec operates ISO/IEC 17025 accredited calibration facilities in Reinach (CH), Cernay (FR), Greenwood (USA), Aurangabad (IN), Suzhou (CN) and Itatiba (BR).

05-13-2019

Date of calibration

Davion Nash

Operator

Endress+Hauser Flowtec, Division USA
2330 Endress Place
Greenwood, IN 46143

Certified acc. to
ISO 9001, Reg.-N° 030502.2
ISO 14001, Reg.-N° EMS561046

Endress+Hauser

People for Process Automation

# Flow Calibration with Adjustment

30469713-4812068

| | |
|---|---|
| 3003322751 | FCP-6.C |
| Purchase order number | Calibration rig |
| CA-3006188887-7 / Endress+Hauser Flowtec | 3.983614 us.gal/min ( ≙ 100%) |
| Order N°/Manufacturer | Calibrated full scale |
| 50H08-HAAA1RA0BAAD+ | Service interface |
| Order code | Calibrated output |
| PROMAG 50 H DN08 / 5/16" | 1.0255 |
| Transmitter/Sensor | Calibration factor |
| P502EB16000 | 1 |
| Serial N° | Zero point |
| FQIT-04-799 | 77.6 °F |
| Tag N° | Water temperature |

| Flow [%] | Flow [us.gal/min] | Duration [s] | V target [us.gal] | V meas. [us.gal] | Δ o.r.* [%] | Outp.** [mA] |
|---|---|---|---|---|---|---|
| 40.3 | 1.6066 | 60.1 | 1.6082 | 1.6090 | 0.05 | 10.46 |
| 99.5 | 3.9645 | 85.1 | 5.6247 | 5.6241 | -0.01 | 19.92 |
| 99.6 | 3.9677 | 85.1 | 5.6305 | 5.6310 | 0.01 | 19.94 |
| – | – | – | – | – | – | – |
| – | – | – | – | – | – | – |
| – | – | – | – | – | – | – |
| – | – | – | – | – | – | – |
| – | – | – | – | – | – | – |
| – | – | – | – | – | – | – |
| – | – | – | – | – | – | – |

*o.r.: of reading

**Calculated value (4 - 20 mA)

Measured error % o.r.

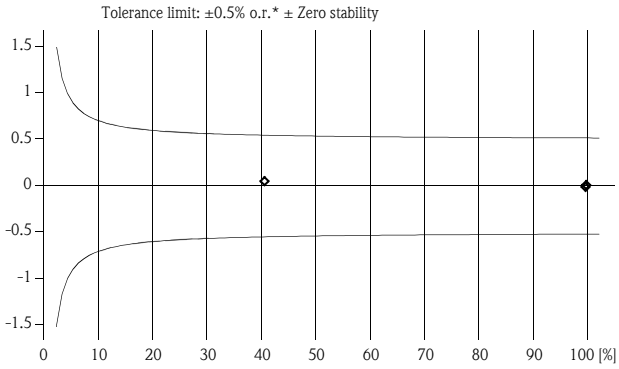


For detailed data concerning output specifications of the unit under test, see Technical Information (TI), chapter Performance characteristics.

The calibration is traceable to the N.I.S.T. through standards certified at preset intervals.

Endress+Hauser Flowtec operates ISO/IEC 17025 accredited calibration facilities in Reinach (CH), Cernay (FR), Greenwood (USA), Aurangabad (IN), Suzhou (CN) and Itatiba (BR).

Robert J. Kizzee

05-10-2019

Date of calibration

Joe Kizzee

Operator

Endress+Hauser Flowtec, Division USA
2330 Endress Place
Greenwood, IN 46143

Certified acc. to
ISO 9001, Reg.-N° 030502.2
ISO 14001, Reg.-N° EMS561046

Endress+Hauser

People for Process Automation

# Flow Calibration with Adjustment

30469710-4812067

| | |
|---|---|
| 3003322751 | FCP-6.C |
| Purchase order number | Calibration rig |
| CA-3006188887-25 / Endress+Hauser Flowtec | 14.00492 us.gal/min ( ≙ 100%) |
| Order N°/Manufacturer | Calibrated full scale |
| 50H15-HAAA1RA0BAAD+ | Service interface |
| Order code | Calibrated output |
| PROMAG 50 H DN15 / 1/2" | 1.1349 |
| Transmitter/Sensor | Calibration factor |
| P502EA16000 | -3 |
| Serial N° | Zero point |
| FQIT-04-999 | 77.7 °F |
| Tag N° | Water temperature |

| Flow [%] | Flow [us.gal/min] | Duration [s] | V target [us.gal] | V meas. [us.gal] | Δ o.r.* [%] | Outp.** [mA] |
|---|---|---|---|---|---|---|
| 40.2 | 5.6224 | 60.1 | 5.6353 | 5.6369 | 0.03 | 10.43 |
| 40.2 | 5.6252 | 60.1 | 5.6388 | 5.6375 | -0.02 | 10.43 |
| 101.1 | 14.155 | 60.1 | 14.189 | 14.191 | 0.01 | 20.17 |
| – | – | – | – | – | – | – |
| – | – | – | – | – | – | – |
| – | – | – | – | – | – | – |
| – | – | – | – | – | – | – |
| – | – | – | – | – | – | – |
| – | – | – | – | – | – | – |
| – | – | – | – | – | – | – |

*o.r.: of reading

**Calculated value (4 - 20 mA)

Measured error % o.r.

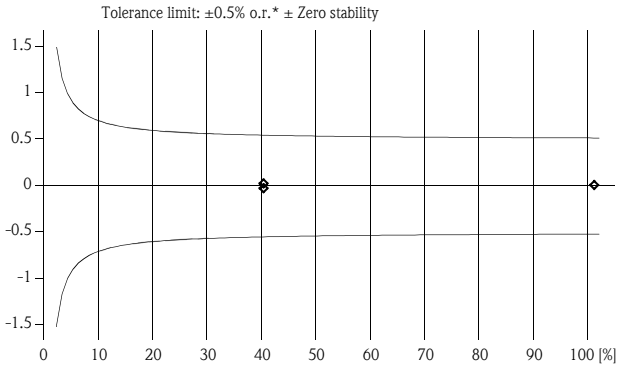


For detailed data concerning output specifications of the unit under test, see Technical Information (TI), chapter Performance characteristics.

The calibration is traceable to the N.I.S.T. through standards certified at preset intervals.

Endress+Hauser Flowtec operates ISO/IEC 17025 accredited calibration facilities in Reinach (CH), Cernay (FR), Greenwood (USA), Aurangabad (IN), Suzhou (CN) and Itatiba (BR).

Robert J. Kizzee

05-10-2019

Date of calibration

Joe Kizzee

Operator

Endress+Hauser Flowtec, Division USA
2330 Endress Place
Greenwood, IN 46143

Certified acc. to
ISO 9001, Reg.-N° 030502.2
ISO 14001, Reg.-N° EMS561046

Endress+Hauser SE+Co.
2340 Endress Place
Greenwood. In. 46143-9772

# Final Inspection Report / Endprüfprotokoll

The manufacturer confirms that all measuring equipment used to assure the quality of the products has been calibrated and is traceable (e.g. DKD/DAkkS, NIST, NABL...) to national or international standards.

Der Hersteller bestätigt, dass die zu Qualitätsprüfungen des Erzeugnisses eingesetzten Messmittel gültig kalibriert waren und auf nationale (z.B. DKD/DAkkS, NIST, NABL...) bzw. internationale Normale rückführbar sind.

## Prosonic S

| | | |
|---|---|---|
| TAG number | Messstellen-Nummer | LIT-03-111 |
| Order code | Bestellcode | FMU90-N11CA111AA1A |
| Serial number | Seriennummer | P50043150E6 |
| Extended order code | Erweiterter Bestellcode | FMU90-N11CA111AA1A |
| Output type | Ausgang | 4 ... 20 mA HART |
| Software version | Softwareversion | 02.01.06-EU2 |

## Norclair Inc.

| | | |
|---|---|---|
| Customer order number | Auftragsnummer des Kunden | P1039-01001 |
| E+H sales order number | E+H Auftragsnummer | 3019431158 000110 |
| Internal order number | Interne Auftragsnummer | 3003322751/0110 |

Ambient temperature / Umgebungs- Temperatur

| Test step | Testschritt | Test result | Testergebnisse |
|---|---|---|---|
| Sensor functionality | Sensorfunktionalität | Passed | Bestanden |
| HART and current output | HART- und Stromausgänge | Passed | Bestanden |
| Relay output(s) | Relaisausgang bzw. -ausgänge | Passed | Bestanden |
| Display and operation | Display und Vorortbedienung | Passed | Bestanden |
| HV test | Hochspannungstest | Passed | Bestanden |

We confirm that all tests, according to the Quality Plan (QP), have been performed successfully.

Wir bestätigen, dass alle Tests aus dem Qualitätsplan (QP), erfolgreich durchgeführt wurden.

At the time of verification, the measuring points of the device indicated above were in compliance to the published valid technical specification (TI).
TI00397F

Das Gerät entsprach zum Zeitpunkt der Prüfung an den aufgeführten Messpunkten den gültigen technischen Spezifikationen (TI).

This document was generated electronically and is valid without signature.

Dieses Dokument wurde elektronisch erzeugt und ist ohne Unterschrift gültig.

Date of inspection / Prüfdatum 13. May 2019



– End of document –
– Ende des Dokumentes –

Endress+Hauser
People for Process Automation

Endress+Hauser SE+Co.
2340 Endress Place
Greenwood. In. 46143-9772

# Final Inspection Report / Endprüfprotokoll

The manufacturer confirms that all measuring equipment used to assure the quality of the products has been calibrated and is traceable (e.g. DKD/DAkkS, NIST, NABL...) to national or international standards.

Der Hersteller bestätigt, dass die zu Qualitätsprüfungen des Erzeugnisses eingesetzten Messmittel gültig kalibriert waren und auf nationale (z.B. DKD/DAkkS, NIST, NABL...) bzw. internationale Normale rückführbar sind.

## Prosonic S

| | | |
|---|---|---|
| TAG number | Messstellen-Nummer | LIT-03-121 |
| Order code | Bestellcode | FMU90-N11CA111AA1A |
| Serial number | Seriennummer | P50044150E6 |
| Extended order code | Erweiterter Bestellcode | FMU90-N11CA111AA1A |
| Output type | Ausgang | 4 ... 20 mA HART |
| Software version | Softwareversion | 02.01.06-EU2 |

## Norclair Inc.

| | | |
|---|---|---|
| Customer order number | Auftragsnummer des Kunden | P1039-01001 |
| E+H sales order number | E+H Auftragsnummer | 3019431158 000110 |
| Internal order number | Interne Auftragsnummer | 3003322751/0110 |

Ambient temperature / Umgebungs- Temperatur

| Test step | Testschritt | Test result | Testergebnisse |
|---|---|---|---|
| Sensor functionality | Sensorfunktionalität | Passed | Bestanden |
| HART and current output | HART- und Stromausgänge | Passed | Bestanden |
| Relay output(s) | Relaisausgang bzw. -ausgänge | Passed | Bestanden |
| Display and operation | Display und Vorortbedienung | Passed | Bestanden |
| HV test | Hochspannungstest | Passed | Bestanden |

We confirm that all tests, according to the Quality Plan (QP), have been performed successfully.

Wir bestätigen, dass alle Tests aus dem Qualitätsplan (QP), erfolgreich durchgeführt wurden.

At the time of verification, the measuring points of the device indicated above were in compliance to the published valid technical specification (TI).
TI00397F

Das Gerät entsprach zum Zeitpunkt der Prüfung an den aufgeführten Messpunkten den gültigen technischen Spezifikationen (TI).

This document was generated electronically and is valid without signature.

Dieses Dokument wurde elektronisch erzeugt und ist ohne Unterschrift gültig.

Date of inspection / Prüfdatum 13. May 2019



– End of document –
– Ende des Dokumentes –

Endress+Hauser
People for Process Automation

# Test Report

Endress+Hauser
People for Process Automation

## Final Inspection Report

### Order information

| | |
|---|---|
| Customer name | Norclair Inc. |
| Customer purchase order | P1039-01001 |
| Sales order number / Item | 3003322751/0160 |
| Internal order number / Item | 3019480735000160 |

### Device information

| | |
|---|---|
| Description | Liquiphant M FTL51 |
| TAG | LSHH-03-112 |
| Serial number | P5008115027 |
| Order code | FTL51-D74V3/0 |
| Extended order code | FTL51-UAP2BB4E5A+Z1 |

### Additional information

| | |
|---|---|
| Output type | FEL54; Relais DPDT 19-253 V AC/19-55 V DC |
| Software version | 01.00.01 |
| Ambient temperature / - humidity / - pressure | 23 °C ±5 °C / 60 % rel. ±40 % rel. / 990 mbar ±30 mbar |
| Probe length | 1380 mm |

### Test result

Hereby we confirm that all tests according to the Quality plan (IP00017F) have been performed successfully.

| Test | Procedure number | Test description |
|---|---|---|
| Contract review | TS00001F | As required in ISO 9001 |
| Incoming goods inspection | TS00003F | Verification of conformance to the specified requirements |
| Printed circuit boards test | TS00009F | In-circuit test and functional test |
| Electronic insert test | TS00008F | Automatic test: high voltage and functional test of the electronic insert |
| High voltage test | TS00002F | The voltage used is chosen depending on operating voltage, terminals and approvals, in accordance to the valid national / international standards |
| Welding inspection | TS00010F | Quality and tightness of the welding seams |
| Leakage test | TS00004F | Tightness test with helium |
| Functional test of sensor | TS00034F | Measurement and adjustment of operating frequency and phase |
| Calibration of sensor | TS00036F | Verification of frequency and phase of the sensor |
| Final check of instrument | TS00035F | Verification of switching function |
| Outgoing visual check | TS00006F | Visual inspection of completeness and correctness of the instrument and the markings |
| Logistical verification | TS00005F | Automatic verification in the delivery phase via barcode that the instrument correspond to the order |
| Resonant Frequency uncovered | | 1068.62 Hz |

Hereby we confirm that all measuring equipment used to assure the quality of the products has been calibrated and is traceable to national or international standards.

### Execution

Greenwood, 2019-05-14, 155435

This document was generated electronically and is valid without signature.

**Endress+Hauser SE+Co.**
2340 Endress Place
Greenwood. In. 46143-9772
USA
www.endress.com

# Test Report

Endress+Hauser
People for Process Automation

## Final Inspection Report

### Order information

| | |
|---|---|
| Customer name | Norclair Inc. |
| Customer purchase order | P1039-01001 |
| Sales order number / Item | 3003322751/0160 |
| Internal order number / Item | 3019480735000160 |

### Device information

| | |
|---|---|
| Description | Liquiphant M FTL51 |
| TAG | LSHH-03-122 |
| Serial number | P5008215027 |
| Order code | FTL51-D74V3/0 |
| Extended order code | FTL51-UAP2BB4E5A+Z1 |

### Additional information

| | |
|---|---|
| Output type | FEL54; Relais DPDT 19-253 V AC/19-55 V DC |
| Software version | 01.00.01 |
| Ambient temperature / - humidity / - pressure | 23 °C ±5 °C / 60 % rel. ±40 % rel. / 990 mbar ±30 mbar |
| Probe length | 1380 mm |

### Test result

Hereby we confirm that all tests according to the Quality plan (IP00017F) have been performed successfully.

| Test | Procedure number | Test description |
|---|---|---|
| Contract review | TS00001F | As required in ISO 9001 |
| Incoming goods inspection | TS00003F | Verification of conformance to the specified requirements |
| Printed circuit boards test | TS00009F | In-circuit test and functional test |
| Electronic insert test | TS00008F | Automatic test: high voltage and functional test of the electronic insert |
| High voltage test | TS00002F | The voltage used is chosen depending on operating voltage, terminals and approvals, in accordance to the valid national / international standards |
| Welding inspection | TS00010F | Quality and tightness of the welding seams |
| Leakage test | TS00004F | Tightness test with helium |
| Functional test of sensor | TS00034F | Measurement and adjustment of operating frequency and phase |
| Calibration of sensor | TS00036F | Verification of frequency and phase of the sensor |
| Final check of instrument | TS00035F | Verification of switching function |
| Outgoing visual check | TS00006F | Visual inspection of completeness and correctness of the instrument and the markings |
| Logistical verification | TS00005F | Automatic verification in the delivery phase via barcode that the instrument correspond to the order |
| Resonant Frequency uncovered | | 996.79 Hz |

Hereby we confirm that all measuring equipment used to assure the quality of the products has been calibrated and is traceable to national or international standards.

### Execution

Greenwood, 2019-05-14, 155435

This document was generated electronically and is valid without signature.

**Endress+Hauser SE+Co.**
2340 Endress Place
Greenwood. In. 46143-9772
USA
www.endress.com

# Test Report

Endress+Hauser
People for Process Automation

## Final Inspection Report

### Order information

| | |
|---|---|
| Customer name | Norclair Inc. |
| Customer purchase order | P1039-01001 |
| Sales order number / Item | 3003322751/0170 |
| Internal order number / Item | 3019480735000170 |

### Device information

| | |
|---|---|
| Description | Liquiphant M FTL51 |
| TAG | LSLL-03-113 |
| Serial number | P5007F15027 |
| Order code | FTL51-D74T9/0 |
| Extended order code | FTL51-UAP2BB4E5A+Z1 |

### Additional information

| | |
|---|---|
| Output type | FEL54; Relais DPDT 19-253 V AC/19-55 V DC |
| Software version | 01.00.01 |
| Ambient temperature / - humidity / - pressure | 23 °C ±5 °C / 60 % rel. ±40 % rel. / 990 mbar ±30 mbar |
| Probe length | 4080 mm |

### Test result

Hereby we confirm that all tests according to the Quality plan (IP00017F) have been performed successfully.

| Test | Procedure number | Test description |
|---|---|---|
| Contract review | TS00001F | As required in ISO 9001 |
| Incoming goods inspection | TS00003F | Verification of conformance to the specified requirements |
| Printed circuit boards test | TS00009F | In-circuit test and functional test |
| Electronic insert test | TS00008F | Automatic test: high voltage and functional test of the electronic insert |
| High voltage test | TS00002F | The voltage used is chosen depending on operating voltage, terminals and approvals, in accordance to the valid national / international standards |
| Welding inspection | TS00010F | Quality and tightness of the welding seams |
| Leakage test | TS00004F | Tightness test with helium |
| Functional test of sensor | TS00034F | Measurement and adjustment of operating frequency and phase |
| Calibration of sensor | TS00036F | Verification of frequency and phase of the sensor |
| Final check of instrument | TS00035F | Verification of switching function |
| Outgoing visual check | TS00006F | Visual inspection of completeness and correctness of the instrument and the markings |
| Logistical verification | TS00005F | Automatic verification in the delivery phase via barcode that the instrument correspond to the order |
| Resonant Frequency uncovered | | 1079.42 Hz |

Hereby we confirm that all measuring equipment used to assure the quality of the products has been calibrated and is traceable to national or international standards.

### Execution

Greenwood, 2019-05-14, 155435

This document was generated electronically and is valid without signature.

**Endress+Hauser SE+Co.**
2340 Endress Place
Greenwood. In. 46143-9772
USA
www.endress.com

# Test Report

Endress+Hauser
People for Process Automation

## Final Inspection Report

### Order information

| | |
|---|---|
| Customer name | Norclair Inc. |
| Customer purchase order | P1039-01001 |
| Sales order number / Item | 3003322751/0170 |
| Internal order number / Item | 3019480735000170 |

### Device information

| | |
|---|---|
| Description | Liquiphant M FTL51 |
| TAG | LSLL-03-123 |
| Serial number | P5008015027 |
| Order code | FTL51-D74T9/0 |
| Extended order code | FTL51-UAP2BB4E5A+Z1 |

### Additional information

| | |
|---|---|
| Output type | FEL54; Relais DPDT 19-253 V AC/19-55 V DC |
| Software version | 01.00.01 |
| Ambient temperature / - humidity / - pressure | 23 °C ±5 °C / 60 % rel. ±40 % rel. / 990 mbar ±30 mbar |
| Probe length | 4080 mm |

### Test result

Hereby we confirm that all tests according to the Quality plan (IP00017F) have been performed successfully.

| Test | Procedure number | Test description |
|---|---|---|
| Contract review | TS00001F | As required in ISO 9001 |
| Incoming goods inspection | TS00003F | Verification of conformance to the specified requirements |
| Printed circuit boards test | TS00009F | In-circuit test and functional test |
| Electronic insert test | TS00008F | Automatic test: high voltage and functional test of the electronic insert |
| High voltage test | TS00002F | The voltage used is chosen depending on operating voltage, terminals and approvals, in accordance to the valid national / international standards |
| Welding inspection | TS00010F | Quality and tightness of the welding seams |
| Leakage test | TS00004F | Tightness test with helium |
| Functional test of sensor | TS00034F | Measurement and adjustment of operating frequency and phase |
| Calibration of sensor | TS00036F | Verification of frequency and phase of the sensor |
| Final check of instrument | TS00035F | Verification of switching function |
| Outgoing visual check | TS00006F | Visual inspection of completeness and correctness of the instrument and the markings |
| Logistical verification | TS00005F | Automatic verification in the delivery phase via barcode that the instrument correspond to the order |
| Resonant Frequency uncovered | | 1077.27 Hz |

Hereby we confirm that all measuring equipment used to assure the quality of the products has been calibrated and is traceable to national or international standards.

### Execution

Greenwood, 2019-05-14, 155435

This document was generated electronically and is valid without signature.

**Endress+Hauser SE+Co.**
2340 Endress Place
Greenwood. In. 46143-9772
USA
www.endress.com

# CERTIFICATE OF CALIBRATION and CONFORMANCE

**MSA North America**
**Cranberry Plant**
1000 Cranberry Woods Drive
Cranberry Township, PA 16066

724.776.8600

MANUFACTURING DATE August 08, 2018
CUSTOMER ORDER NUMBER: **PO0440370**
MSA ORDER NUMBER: **401276083**

| PART NUMBER | LINE ITEM NUMBER | QUANTITY SHIPPED | DESCRIPTION |
|---|---|---|---|
| A-TRIGARD | 10 | 6 | A-TRIGARD:-A-E-0-0-16-4-00-0-00-0-0-2-0 |

Serial Numbers: **H18-401276083-10-001, H18-401276083-10-002, H18-401276083-10-003, H18-401276083-10-004, H18-401276083-10-005, H18-401276083-10-006**

---

.
The instruments referenced above were calibrated for the detection of **0 – 50 PPM Hydrogen Sulfide**, with a span setting of **40 PPM H2S** (Cylinder Lot 160-401001873-1). The calibration and testing were performed using NST traceable equipment and were in accordance with our ISO 9001 certified quality system. As specified in the instrument instructions, a calibration check must be performed on the instrument following installation. Routine calibration checks must be performed to verify that the instrument is operating properly. Failure to perform a calibration check on a routine basis with specified gas calibration equipment may result in inaccurate readings.

## Conformance Statement

MSA certifies that the materials, components, and/or instruments delivered in this shipment conform to all applicable specifications. The items delivered have been processed through the appropriate approved document controlled procedures for Receiving, Manufacturing and Inspection. The materials, components, and/or instruments were inspected, tested, and calibrated, as applicable, per the associated drawings, standards requirements, and/or specifications, and were deemed acceptable by appropriate authorized personnel.

All applicable inspections, testing, and calibrations were performed using NIST traceable equipment, where available, in accordance with MSA's ISO 9001 Certified Quality System. Each material, component, and/or instrument must be installed, operated and maintained in strict accordance with its labels, cautions, warnings, instructions, and within the limitations stated in the supplied instruction manual. Routine calibration checks, equipment inspections, and applicable preventative maintenance measures must be performed to verify that the materials, components, and/or instruments are operating properly. Failure to perform these tasks on a routine basis, or suggested intervals, with specified equipment or methods, may result in inaccurate readings.

Process Certified By:

John F. Dannhardt

JOHN DANNHARDT
QUALITY ENGINEER

Calibrated By:

**JK**

**MSA Corporate Center**
1000 Cranberry Woods Drive
Cranberry Township, PA 16066
800.MSA.2222
www.MSAnet.com

# CERTIFICATE OF CALIBRATION and CONFORMANCE

**MSA North America**
**Cranberry Plant**
1000 Cranberry Woods Drive
Cranberry Township, PA 16066

724.776.8600

MANUFACTURING DATE August 08, 2018
CUSTOMER ORDER NUMBER: **PO0440370**
MSA ORDER NUMBER: **401276083**

| PART NUMBER | LINE ITEM NUMBER | QUANTITY SHIPPED | DESCRIPTION |
|---|---|---|---|
| A-TRIGARD | 20 | 1 | A-TRIGARD:-A-E-0-0-57-4-00-0-00-0-0-2-0 |

Serial Numbers: **H18-401276083-20-001**

---

.
The instruments referenced above were calibrated for the detection of **0 – 1000 PPM Carbon Monoxide**, with a span setting of **300 PPM CO** (Cylinder Lot 32-400636068-1). The calibration and testing were performed using NST traceable equipment and were in accordance with our ISO 9001 certified quality system. As specified in the instrument instructions, a calibration check must be performed on the instrument following installation. Routine calibration checks must be performed to verify that the instrument is operating properly. Failure to perform a calibration check on a routine basis with specified gas calibration equipment may result in inaccurate readings.

## Conformance Statement

MSA certifies that the materials, components, and/or instruments delivered in this shipment conform to all applicable specifications. The items delivered have been processed through the appropriate approved document controlled procedures for Receiving, Manufacturing and Inspection. The materials, components, and/or instruments were inspected, tested, and calibrated, as applicable, per the associated drawings, standards requirements, and/or specifications, and were deemed acceptable by appropriate authorized personnel.

All applicable inspections, testing, and calibrations were performed using NIST traceable equipment, where available, in accordance with MSA's ISO 9001 Certified Quality System. Each material, component, and/or instrument must be installed, operated and maintained in strict accordance with its labels, cautions, warnings, instructions, and within the limitations stated in the supplied instruction manual. Routine calibration checks, equipment inspections, and applicable preventative maintenance measures must be performed to verify that the materials, components, and/or instruments are operating properly. Failure to perform these tasks on a routine basis, or suggested intervals, with specified equipment or methods, may result in inaccurate readings.

Process Certified By:

John F. Dannhardt

JOHN DANNHARDT
QUALITY ENGINEER

Calibrated By:

**JK**

**MSA Corporate Center**
1000 Cranberry Woods Drive
Cranberry Township, PA 16066
800.MSA.2222
www.MSAnet.com

# APPENDIX H

# COMMISSIONING FORMS

| DIGITAL INPUTS | | | | | | | | | | | | | | |
|---|---|---|---|---|---|---|---|---|---|---|---|---|---|---|
| # | Signal Description | PLC Tag | Terminal Strip | PLC Termination | G/N | NC/CO | COMMENTS 1 | COMMENTS 2 | ALARM | PRIORITY | HH | H | L | LL | RESET REQ | ALARM MESSAGE |
| 1 | Wet Well Level Indication Fault Status | XA-01-100 | TS01 - 1,2 | Slot 01: IN0 | N | | | | ALARM | MEDIUM | | | | | NO | Wet Well Level Indication Fault Status |
| 2 | T-01-001 Wet Well Low Low Level Alarm | LALL-01-111 | TS01 - 3,4 | Slot 01: IN1 | G | NO | | | ALARM | HIGH | | | | | NO | T-01-001 Wet Well Low Low Level Alarm |
| 3 | T-01-001 Wet Well Low Level Alarm | LAL-01-112 | TS01 - 5,6 | Slot 01: IN2 | G | NO | | | ALARM | MEDIUM | | | | | NO | T-01-001 Wet Well Low Level Alarm |
| 4 | T-01-001 Wet Well High Level Alarm | LAH-01-113 | TS01 - 7,8 | Slot 01: IN3 | G | NC | | | ALARM | MEDIUM | | | | | NO | T-01-001 Wet Well High Level Alarm |
| 5 | T-01-001 Wet Well High High Level Alarm | LAHH-01-114 | TS01 - 9,10 | Slot 01: IN4 | G | NC | | | ALARM | HIGH | | | | | NO | T-01-001 Wet Well High High Level Alarm |
| 6 | P-01-110 Run Status | YI-01-110 | TS01 - 11,12 | Slot 01: IN5 | G | NO | | | - | - | | | | | | |
| 7 | P-01-110 Fault Status | XA-01-110 | TS01 - 13,14 | Slot 01: IN6 | G | NC | | | ALARM | MEDIUM | | | | | NO | P-01-110 Fault Status |
| 8 | P-01-110 Auto Status | HI-01-110 | TS01 - 15,16 | Slot 01: IN7 | G | NO | | | ALARM | MEDIUM | | | | | NO | P-01-110 Auto Status |
| 9 | P-01-110 Motor Fault | UA-01-110 | TS01 - 17,18 | Slot 01: IN8 | G | NO | Minicas is driving a relay, breaks the Run Signal and sends PLC Motor fault signal | | ALARM | MEDIUM | | | | | NO | P-01-110 Motor Fault |
| 10 | P-01-110 ESD Triggered | HA-01-110 | TS01 - 19,20 | Slot 01: IN9 | G | NO | | | ALARM | MEDIUM | | | | | NO | P-01-110 ESD Triggered |
| 11 | T-01-001 Oulet Flow Totalization Pulse | FQI-01-150 | TS01 - 21,22 | Slot 01: IN10 | G | NO | PULSE = 100L // 200ms | NEEDS TO BE SETUP | - | - | | | | | | |
| 12 | UPS Fault [FROM UPS] | XA-01-960 | TS01 - 23,24 | Slot 01: IN11 | G | NO | SIMULATED | | ALARM | MEDIUM | | | | | NO | UPS Fault [FROM UPS] |
| 13 | UPS Battery Low | EAL-01-960 | TS01 - 25,26 | Slot 01: IN12 | G | NO | | | ALARM | HIGH | | | | | NO | UPS Battery Low |
| 14 | UPS On Bypass ON UPS | ES-01-960A | TS01 - 27, 28 | Slot 01: IN13 | G | NC | | | ALARM | MEDIUM | | | | | N | UPS On Bypass ON UPS |
| 15 | CPL_900 UTILITY POWER LOSS - ON BATTERY | ES-01-960B | TS01 - 29, 30 | Slot 01: IN14 | G | NC | | | ALARM | HIGH | | | | | N | CPL_900 UTILITY POWER LOSS - ON BATTERY |
| 16 | UPS Bypass Switch In Bypass Mode [ALWAYS ON] | ES-01-962 | TS01 - 31, 32 | Slot 01: IN15 | G | NO | | | ALARM | MEDIUM | | | | | N | UPS Bypass Switch In Bypass Mode [ALWAYS ON] |
| 1 | P-01-120 Run Status | YI-01-120 | TS02 - 1,2 | Slot 02: IN0 | G | NO | | | - | - | | | | | | |
| 2 | P-01-120 Fault Status | XA-01-120 | TS02 - 3,4 | Slot 02: IN1 | G | NC | | | ALARM | MEDIUM | | | | | NO | P-01-120 Fault Status |
| 3 | P-01-120 Auto Status | HI-01-120 | TS02 - 5,6 | Slot 02: IN2 | G | NO | | | ALARM | MEDIUM | | | | | NO | P-01-120 Auto Status |
| 4 | P-01-120 Motor Fault | UA-01-120 | TS02 - 7,8 | Slot 02: IN3 | G | NO | Minicas is driving a relay, breaks the Run Signal and sends PLC Motor fault signal | | ALARM | MEDIUM | | | | | NO | P-01-120 Motor Fault |
| 5 | P-01-120 ESD Triggered | HA-01-120 | TS02 - 9,10 | Slot 02: IN4 | G | NO | | | ALARM | MEDIUM | | | | | NO | P-01-120 ESD Triggered |
| 6 | SCRN-01-210 Run Status | YI-01-210 | TS02 - 11,12 | Slot 02: IN5 | G | | | | - | - | | | | | | SCRN-01-210 Run Status |
| 7 | SCRN-01-210 Fault Status | XA-01-210 | TS02 - 13,14 | Slot 02: IN6 | G | | | | ALARM | MEDIUM | | | | | | SCRN-01-210 Fault Status |
| 8 | SCRN-01-210 Level High Alarm | LAH-01-210 | TS02 - 15,16 | Slot 02: IN7 | G | | | | ALARM | MEDIUM | | | | | | SCRN-01-210 Level High Alarm |
| 9 | SCRN-01-210 Power Loss/ESD Triggered | HA-01-210 | TS02 - 17,18 | Slot 02: IN8 | G | NO | | | ALARM | MEDIUM | | | | | | SCRN-01-210 Power Loss/ESD Triggered |
| 10 | Disposal Trailer Motor Valve Open Status FV-112 | ZSO-01-112 | TS02 - 19,20 | Slot 02: IN9 | G | NO | | | - | - | | | | | | Disposal Trailer Motor Valve Open Status FV-112 |
| 11 | Disposal Trailer Motor Valve Closed Status FV-112 | ZSC-01-112 | TS02 - 21,22 | Slot 02: IN10 | G | NC | | | - | - | | | | | | Disposal Trailer Motor Valve Closed Status FV-112 |
| 12 | PF-01-310 Incoming Knive Valve Open Status | ZSO-01-111 | TS02 - 23,24 | Slot 02: IN11 | G | | | | - | - | | | | | | PF-01-310 Incoming Knive Valve Open Status |
| 13 | PF-01-310 Incoming Knive Valve Closed Status | ZSC-01-111 | TS02 - 25,26 | Slot 02: IN12 | G | | | | - | - | | | | | | PF-01-310 Incoming Knive Valve Closed Status |
| 14 | PF-01-310 Run Status | YI-01-310 | TS02 - 27, 28 | Slot 02: IN13 | G | NO | | | - | - | | | | | | PF-01-310 Run Status |
| 15 | PF-01-310 Fault Status | XA-01-310 | TS02 - 29, 30 | Slot 02: IN14 | G | NO | | | ALARM | MEDIUM | | | | | | PF-01-310 Fault Status |
| 16 | Bypass Outflow Knife Valve Opened Status | ZSO-01-001 | TS02 - 31, 32 | Slot 02: IN15 | G | NO | | | - | - | | | | | | Primary Effluent Outflow Knife Valve |
| 17 | Bypass Outflow Knife Valve Closed Status | ZSC-01-001 | TS02 - 33,34 | Slot 02: IN16 | G | NC | | | - | - | | | | | | Primary Effluent Outflow Knife Valve |
| 18 | Headworks Lower Gas Detection 1 Fault Status | XA-01-901 | TS02 - 35,36 | Slot 02: IN17 | G | | | | ALARM | MEDIUM | | | | | NO | Headworks Lower Gas Detection 1 Fault Status |
| 19 | Headworks Lower Gas Detection 2 Fault Status | XA-01-902 | TS02 - 37,38 | Slot 02: IN18 | G | | | | ALARM | MEDIUM | | | | | NO | Headworks Lower Gas Detection 2 Fault Status |
| 20 | Headworks Upper Gas Detection 1 Fault Status | XA-01-903 | TS02 - 39,40 | Slot 02: IN19 | G | | | | ALARM | MEDIUM | | | | | NO | Headworks Upper Gas Detection 1 Fault Status |
| 21 | Headworks Upper Gas Detection 2 Fault Status | XA-01-904 | TS02 - 41,42 | Slot 02: IN20 | G | | | | ALARM | MEDIUM | | | | | NO | Headworks Upper Gas Detection 2 Fault Status |
| 22 | Disposal Trailer Motor Valve Open Status FV-01-114 | ZSO-01-114 | TS02 - 43,44 | Slot 02: IN21 | G | NO | | | - | - | | | | | | Disposal Trailer Motor Valve Open Status FV-01-114 |
| 23 | Disposal Trailer Motor Valve Closed Status FV-01-114 | ZSC-01-114 | TS02 - 45,46 | Slot 02: IN22 | G | NC | | | - | - | | | | | | Disposal Trailer Motor Valve Closed Status FV-01-114 |
| 24 | Disposal Trailer Motor Valve Switch Position HS-01-114 | HS-01-114 | TS02 - 47,48 | Slot 02: IN23 | G | NC | | | - | - | | | | | | Disposal Trailer Motor Valve Switch Position HS-01-114 |
| | SPARE | - | TS02 - 47,65 | Slot 02: IN24-IN32 | - | | | | - | - | | | | | | SPARE |
| 1 | P-01-130 Run Status | YI-01-130 | TS03 - 1,2 | Slot 03: IN0 | G | NO | | | - | - | | | | | | P-01-130 Run Status |
| 2 | P-01-130 Fault Status | XA-01-130 | TS03 - 3,4 | Slot 03: IN1 | G | NC | | | ALARM | MEDIUM | | | | | NO | P-01-130 Fault Status |
| 3 | P-01-130 Auto Status | HI-01-130 | TS03 - 5,6 | Slot 03: IN2 | G | NO | | | - | - | | | | | NO | P-01-130 Auto Status |
| 4 | P-01-130 Motor Fault | UA-01-130 | TS03 - 7,8 | Slot 03: IN3 | G | NC | Minicas is driving a relay, breaks the Run Signal and sends PLC Motor fault signal | | ALARM | MEDIUM | | | | | NO | P-01-130 Motor Fault |
| 5 | P-01-130 ESD Triggered | HA-01-130 | TS03 - 9,10 | Slot 03: IN4 | G | NO | | | ALARM | MEDIUM | | | | | NO | P-01-130 ESD Triggered |
| 6 | SCRN-01-220 Run Status | YI-01-220 | TS03 - 11,12 | Slot 03: IN5 | G | | | | - | - | | | | | | SCRN-01-220 Run Status |
| 7 | SCRN-01-220 Fault Status | XA-01-220 | TS03 - 13,14 | Slot 03: IN6 | G | | | | ALARM | MEDIUM | | | | | | SCRN-01-220 Fault Status |
| 8 | SCRN-01-220 Level High Alarm | LAH-01-220 | TS03 - 15,16 | Slot 03: IN7 | G | | | | ALARM | MEDIUM | | | | | | SCRN-01-220 Level High Alarm |
| 9 | SCRN-01-220 Power Loss/ESD Triggered | HA-01-220 | TS03 - 17,18 | Slot 03: IN8 | G | NO | | | ALARM | MEDIUM | | | | | | SCRN-01-220 Power Loss/ESD Triggered |
| 10 | PF-01-320 Incoming Knive Valve Open Status | ZSO-01-121 | TS03 - 19,20 | Slot 03: IN9 | G | NO | | | - | - | | | | | | PF-01-320 Incoming Knive Valve Open Status |
| 11 | PF-01-320 Incoming Knive Valve Closed Status | ZSC-01-121 | TS03 - 21,22 | Slot 03: IN10 | G | NC | | | - | - | | | | | | PF-01-320 Incoming Knive Valve Closed Status |
| 12 | PF-01-320 Run Status | YI-01-320 | TS03 - 23,24 | Slot 03: IN11 | G | NO | | TROJEN | - | - | | | | | | PF-01-320 Run Status |
| 13 | PF-01-320 Fault Status | XA-01-320 | TS03 - 25,26 | Slot 03: IN12 | G | NO | | TROJEN | ALARM | MEDIUM | | | | | | PF-01-320 Fault Status |
| 14 | PLC-900 DC Power Supply #1 - DC Voltage Fault | XA-02-970 | TS03 - 27,28 | Slot 03: IN13 | G | NC | | | ALARM | MEDIUM | | | | | NO | PLC-900 DC Power Supply #1 - DC Voltage Fault |
| 15 | PLC-900 DC Power Supply #2 - DC Voltage Fault | XA-02-971 | TS03 - 29,30 | Slot 03: IN14 | G | NC | | | ALARM | MEDIUM | | | | | NO | PLC-900 DC Power Supply #2 - DC Voltage Fault |
| 16 | PLC -901 Surge Protection Device - Surge Indication | XA-02-900 | TS03 - 31,32 | Slot 03: IN15 | N | | CONTACT CARD NOT INSTALLED | | ALARM | MEDIUM | | | | | | PLC -901 Surge Protection Device - Surge Indication |
| 17 | SPARE | | TS03 - 33,34 | Slot 03: IN16 | - | | DUPLICATE DELETED | UPS Bypass Switch In Bypass Mode [DELETED] | - | - | | | | | | UPS Bypass Switch In Bypass Mode [DELETED] |
| 18 | | | TS03 - 35,36 | Slot 03: IN17 | - | | Panel A Feeder Breaker Status Indication | EAL-02-810 | - | - | | | | | | Panel A Feeder Breaker Status Indication |

| I/O CHECK COMPLETION STATUS | | |
|---|---|---|
| DELAYED | 0 | |
| RFI | 0 | |
| G | 106 | |
| N | 2 | |
| Total [Without DELAYED & RFI] | 108 | 98.15% |
| Total [With DELAYED & RFI] | 108 | 100.00% |

| DIGITAL INPUTS | | | | | | | | | |
|---|---|---|---|---|---|---|---|---|---|
| # | Signal Description | PLC Tag | Terminal Strip | PLC Termination | G/N | NC/CO | COMMENTS 1 | COMMENTS 2 | COMMENTS 3 |
| 1 | Spare | | TS1 1,2 | Slot 01: IN0 | - | | Duplicate Deleted | Process Aeration Blower Incoming Pressure Alarm | PAL_02_130 |
| 2 | B02110 Run Status | YI_02_110 | TS1 3,4 | Slot 01: IN1 | G | NO | | | |
| 3 | B02110 Fault Status | XA_02_110 | TS1 5,6 | Slot 01: IN2 | G | NC | | | |
| 4 | B02110 Auto Status | HI_02_110 | TS1 7,8 | Slot 01: IN3 | G | NO | | | |
| 5 | B02110 Motor Fault Status | UA_02_110 | TS1 9,10 | Slot 01: IN4 | G | NC | WIRE IN PANEL BUT NO MOTOR FAULT IN VFD | B02110 Motor Fault | UA_02_110 |
| 6 | B02110 Auto Status | HA_02_110 | TS1 11,12 | Slot 01: IN5 | G | NC | NO ESD INSTALLED | B02110 ESD Triggered | HA_02_110 |
| 7 | Spare | | TS1 13,14 | Slot 01: IN6 | - | | F02115 Run Status | YI_02_115 | DELETED |
| 8 | Spare | | TS1 15,16 | Slot 01: IN7 | - | | F02115 Fault Status | XA_02_115 | DELETED |
| 9 | Spare | | TS1 17,18 | Slot 01: IN8 | - | | F02115 Auto Status | HI_02_115 | DELETED |
| 10 | Process Aeration Blower B02110 High Pressure Switch | PSH_02_118 | TS1 19,20 | Slot 01: IN9 | G | NC | NOT INTERLOCKED WITH VFD | | |
| 11 | Process Aeration Blower B02110 Low Pressure Switch | PAL_02_108 | TS1 21,22 | Slot 01: IN10 | G | NO | NOT INTERLOCKED WITH VFD | | |
| 12 | Process Aeration Blower B02110 High Temp Switch | TSH_02_180 | TS1 23,24 | Slot 01: IN11 | G | NC | NOT INTERLOCKED WITH VFD | | |
| 13 | Spare | | TS1 25,26 | Slot 01: IN12 | - | | VALVES DO NOT HAVE FAULT | Process Air MBBR 2 FV02150 Fault Status | XA_02_150 |
| 14 | Process Air MBBR 2 FV02150 Auto Status | HI_02_150 | TS1 27,28 | Slot 01: IN13 | G | NC | | | |
| 15 | Process Air MBBR 2 FQIT02152 Flow Totalization Pulse | FQI_02_152 | TS1 29,30 | Slot 01: IN14 | G | NO | 1M3 PER PULSE | | |
| 16 | MBBR 1 Inlet Knife Valve Open Status | ZSO_02_211 | TS1 31,32 | Slot 01: IN15 | G | NO | | | |
| 17 | MBBR 1 Inlet Knife Valve Closed Status | ZSC_02_211 | TS1 33,34 | Slot 01: IN16 | G | NC | | | |
| 18 | MBBR 2 Inlet Knife Valve Open Status | ZSO_02_221 | TS1 35,36 | Slot 01: IN17 | G | NO | | | |
| 19 | MBBR 2 Inlet Knife Valve Closed Status | ZSC_02_221 | TS1 37,38 | Slot 01: IN18 | G | NC | | | |
| 20 | MBBR 1 Cell 11 Gas Analyzer Fault Status | XA_02_211 | TS1 39,40 | Slot 01: IN19 | G | NO | | | |
| 21 | MBBR 1 Cell 11 High Level Alarm | LAH_02_213 | TS1 41,42 | Slot 01: IN20 | G | NC | | | |
| 22 | MBBR 1 Cell 12 Gas Analyzer Fault Status | XA_02_212 | TS1 43,44 | Slot 01: IN21 | G | NO | | | |
| 23 | MBBR 1 Cell 12 High Level Alarm | LAH_02_214 | TS1 45,46 | Slot 01: IN22 | G | NC | | | |
| 24 | MBBR 1 Cell 12 H2S Gas Detection Fault Status | XA_02_909 | TS1 47,48 | Slot 01: IN23 | G | NC | | | |
| 25 | MBBR H2S Gas Detection Fault Status | XA_02_907 | TS1 49,50 | Slot 01: IN24 | G | NC | | | |
| 26 | Spare | | TS1 51,52 | Slot 01: IN25 | - | | Violia Panel is 120VAC output will get through ethernet | DAF #1 Run Status | YI_02_310 |
| 27 | Spare | | TS1 53,54 | Slot 01: IN26 | - | | Violia Panel is 120VAC output will get through ethernet | DAF #1 Fault Status | XA_02_310 |
| 28 | P04770 Run Status | YI_04_770 | TS1 55,56 | Slot 01: IN27 | G | NO | | | |
| 29 | P04770 Fault Status | XA_04_770 | TS1 57,58 | Slot 01: IN28 | G | NC | | | |
| 30 | P04770 Auto Status | HI_04_770 | TS1 59,60 | Slot 01: IN29 | G | NO | | | |
| 31 | P04770 Motor Fault | UA_04_770 | TS1 61,62 | Slot 01: IN30 | G | NO | | | |
| 32 | P04770 ESD Triggered | HA_04_770 | TS1 63,64 | Slot 01: IN31 | G | NC | | | |
| 1 | B02120 Run Status | YI_02_120 | TS2 1,2 | Slot 02: IN0 | G | NO | | | |
| 2 | B02120 Fault Status | XA_02_120 | TS2 3,4 | Slot 02: IN1 | G | NC | | | |
| 3 | B02120 Auto Status | HI_02_120 | TS2 5,6 | Slot 02: IN2 | G | NO | | | |
| 4 | B02120 Motor Fault Status | UA_02_120 | TS2 7,8 | Slot 02: IN3 | G | NC | WIRE IN PANEL BUT NO MOTOR FAULT IN VFD | B02120 Motor Fault | UA_02_120 |
| 5 | B02120 Auto Status | HA_02_120 | TS2 9,10 | Slot 02: IN4 | G | NC | NO ESD INSTALLED | B02120 ESD Triggered | HA_A02_120 |
| 6 | Spare | | TS2 11,12 | Slot 02: IN5 | - | | F02125 Run Status | YI_02_125 | Deleted |
| 7 | Spare | | TS2 13,14 | Slot 02: IN6 | - | | F02125 Fault Status | XA_02_125 | Deleted |
| 8 | Spare | | TS2 15,16 | Slot 02: IN7 | - | | F02125 Auto Status | HI_02_125 | Deleted |
| 9 | Process Aeration Blower B02120 High Pressure Switch | PAH_02_128 | TS2 17,18 | Slot 02: IN8 | G | NC | NOT INTERLOCKED WITH VFD | | |
| 10 | Process Aeration Blower B02120 Low Pressure Switch | PAL_02_143 | TS2 19,20 | Slot 02: IN9 | G | NO | NOT INTERLOCKED WITH VFD | | |
| 11 | Process Aeration Blower B02120 High Temp Switch | TSH_02_185 | TS2 21,22 | Slot 02: IN10 | G | NC | NOT INTERLOCKED WITH VFD | | |
| 12 | | | TS2 23,24 | Slot 02: IN11 | - | | VALVES DO NOT HAVE FAULT | Process Air MBBR 1 FV02155 Fault Status | XA_02_155 |
| 13 | Process Air MBBR 1 FV02155 Auto Status | HI_02_155 | TS2 25,26 | Slot 02: IN12 | G | NO | | | |
| 14 | Process Air MBBR 1 Flow Totalization Pulse | FQI_02_156 | TS2 27,28 | Slot 02: IN13 | G | NO | 1M3 PER PULSE | | |
| 15 | T02220 Cell 21 Gas Analyzer Fault Status | XA_02_221 | TS2 29,30 | Slot 02: IN14 | G | NO | | | |
| 16 | T02220 Cell 21 High Level Switch | LAH_02_223 | TS2 31,32 | Slot 02: IN15 | G | NC | | | |
| 17 | T02220 Cell 22 Gas Analyzer Fault Status | XA_02_222 | TS2 33,34 | Slot 02: IN16 | G | NO | | | |
| 18 | T02220 Cell 22 High Level Switch | LAH_02_224 | TS2 35,36 | Slot 02: IN17 | G | NC | | | |
| 19 | DAF #2 H2S Gas Fault Status | XA_02_908 | TS2 37,38 | Slot 02: IN18 | G | NC | | | |
| 20 | Spare | | TS2 39,40 | Slot 02: IN19 | - | | DAF #2 Run Status | XA_02_320 | Violia Panel is 120VAC output will get through ethernet |
| 21 | Spare | | TS2 41,42 | Slot 02: IN20 | - | | DAF #2 Fault Status | YI_02_320 | Violia Panel is 120VAC output will get through ethernet |
| 22 | DAF #1 Inlet Valve Opened Status | ZSO_02_312 | TS2 43,44 | Slot 02: IN21 | G | NO | | | |
| 23 | DAF #1 Inlet Valve Closed Status | ZSC_02_312 | TS2 45,46 | Slot 02: IN22 | G | NO | | | |
| 24 | Spare | | TS2 47,48 | Slot 02: IN23 | - | | T02310 DAF #1 High Level Alarm | LAH_02_330 | Violia Panel is 120VAC output will get through ethernet |
| 25 | Spare | | TS2 49,50 | Slot 02: IN24 | - | | DAF #1 Thickened Water Low Level Alarm | LAL_02_333 | Deleted |
| 26 | Spare | | TS2 51,52 | Slot 02: IN25 | - | | DAF #1 Thickened Water High Level Alarm | LAH_02_332 | Violia Panel is 120VAC output will get through ethernet |
| 27 | Final Effluent Flow Totalization Pulse | FQI_02_328 | TS2 53,54 | Slot 02: IN26 | G | NO | 1 pulse = 100L | | |
| 28 | P04780 Run Status | YI_04_780 | TS2 55,56 | Slot 02: IN27 | G | NO | | | |
| 29 | P04780 Fault Status | XA_04_780 | TS2 57,58 | Slot 02: IN28 | G | NC | | | |
| 30 | P04780 Auto Status | HI_04_780 | TS2 59,60 | Slot 02: IN29 | G | NO | | | |
| 31 | P04780 Motor Fault | UA_04_780 | TS2 61,62 | Slot 02: IN30 | G | NO | | | |
| 32 | P04780 ESD Triggered | HA_04_780 | TS2 63,64 | Slot 02: IN31 | G | NC | | | |
| 1 | B02130 Run Status | YI_02_130 | TS3 1,2 | Slot 03: IN0 | G | NO | | | |
| 2 | B02130 Fault Status | XA_02_130 | TS3 3,4 | Slot 03: IN1 | G | NC | | | |
| 3 | B02130 Auto Status | HI_02_130 | TS3 5,6 | Slot 03: IN2 | G | NO | | | |
| 4 | B02130 Motor Fault Status | UA_02_130 | TS3 7,8 | Slot 03: IN3 | G | NC | WIRE IN PANEL BUT NO MOTOR FAULT IN VFD | B02130 Motor Fault | UA_02_130 |
| 5 | B02130 Auto Status | HA_02_130 | TS3 9,10 | Slot 03: IN4 | G | NC | NO ESD INSTALLED | B02130 ESD Triggered | HA_02_130 |
| 6 | Spare | | TS3 11,12 | Slot 03: IN5 | - | | F02135 Run Status | YI_02_135 | Deleted |
| 7 | Spare | | TS3 13,14 | Slot 03: IN6 | - | | F02135 Fault Status | XA_02_135 | Deleted |
| 8 | Spare | | TS3 15,16 | Slot 03: IN7 | - | | F02135 Auto Status | HI_02_135 | Deleted |
| 9 | Process Aeration Blower B02130 High Pressure Switch | PAH_02_138 | TS3 17,18 | Slot 03: IN8 | G | NC | NOT INTERLOCKED WITH VFD | | |
| 10 | Process Aeration Blower B02130 Low Pressure Switch | PAL_02_146 | TS3 19,20 | Slot 03: IN9 | G | NO | NOT INTERLOCKED WITH VFD | | |
| 11 | Process Aeration Blower B02130 High Temp Switch | TSH_02_190 | TS3 21,22 | Slot 03: IN10 | G | NC | NOT INTERLOCKED WITH VFD | | |
| 12 | Spare | | TS3 23,24 | Slot 03: IN11 | - | | VALVES DO NOT HAVE FAULT | Process Air TWAS FV02170 Fault Status | XA_02_170 |
| 13 | Process Air TWAS FV02170 Auto Status | HI_02_170 | TS3 25,26 | Slot 03: IN12 | G | NC | VALVES DO NOT HAVE AUTO - Engineer Required | | |
| 14 | Process Air MBBR #2 FQIT02172 Flow Totalization Pulse | FQI_02_172 | TS3 27,28 | Slot 03: IN13 | G | NO | 1M3 PER PULSE | | |
| 15 | DAF #2 Inlet Valve Opened Status | ZSO_02_332 | TS3 29,30 | Slot 03: IN14 | G | NO | | | |
| 16 | DAF #2 Inlet Valve Closed Status | ZSC_02_332 | TS3 31,32 | Slot 03: IN15 | G | NO | | | |
| 17 | Spare | | TS3 33,34 | Slot 03: IN16 | - | | T02310 DAF #2 High Level Alarm | LAH_03_342 | Violia Panel is 120VAC output will get through ethernet |
| 18 | Spare | | TS3 35,36 | Slot 03: IN17 | - | | DAF #2 Thickened Water Low Level Alarm | LAL_02_343 | Deleted |
| 19 | Spare | | TS3 37,38 | Slot 03: IN18 | - | | DAF #2 Thickened Water High Level Alarm | LAH_02_342 | Violia Panel is 120VAC output will get through ethernet |
| 20 | Spare | | TS3 39,40 | Slot 03: IN19 | - | | Violia Panel does not produce | PDS04700 LCP Run Status | YI_04_700 |
| 21 | PDS-04-700 LCP Fault Status | XA_04_700 | TS3 41,42 | Slot 03: IN20 | G | NC | | | |
| 22 | PDS-04-700 LCP Low Level Alarm | LAL_04_700 | TS3 43,44 | Slot 03: IN21 | G | NC | HIGH LEVEL WAS CHANGED TO LOW LEVEL | | |
| 23 | PDS-04-700 LCP Low Pressure Alarm | PAL_04_700 | TS3 45,46 | Slot 03: IN22 | G | NC | | | |
| 24 | PDS-04-700 LCP ESD Triggered | HA_04_700 | TS3 47,48 | Slot 03: IN23 | G | NO | | | |
| 25 | AIT-3910 H2S Gas Detector Fault Status | XA_03_910 | TS3 49,50 | Slot 03: IN24 | G | NO | | | |
| 26 | DAF #1 Polymer Flow Totalizer Pulse | FQI_04_798 | TS3 51,52 | Slot 03: IN25 | G | NO | 1 pulse = 1L / 0.001m3 | | |
| 27 | DAF #2 Polymer Flow Totalizer Pulse | FQI_04_799 | TS3 53,54 | Slot 03: IN26 | G | NO | 1 pulse = 1L / 0.001m3 | | |
| 28 | P-04-790 Run Status | YI_04_790 | TS3 55,56 | Slot 03: IN27 | G | NO | | | |
| 29 | P-04-790 Fault Status | XA_04_790 | TS3 57,58 | Slot 03: IN28 | G | NC | | | |
| 30 | P-04-790 Auto Status | HI_04_790 | TS3 59,60 | Slot 03: IN29 | G | NO | | | |
| 31 | P-04-790 Motor Fault | UA_04_790 | TS3 61,62 | Slot 03: IN30 | G | NO | | | |
| 32 | P-04-790 ESD Triggered | HA_04_790 | TS3 63,64 | Slot 03: IN31 | G | NC | | | |
| 1 | P-02-610 Run Status | YI_02_610 | TS4 1,2 | Slot 04: IN0 | G | NO | | | |
| 2 | P-02-610 Fault Status | XA_02_610 | TS4 3,4 | Slot 04: IN1 | G | NC | | | |
| 3 | P-02-610 Auto Status | HI_02_610 | TS4 5,6 | Slot 04: IN2 | G | NO | | | |
| 4 | P-02-610 Motor Fault | UA_02_610 | TS4 7,8 | Slot 04: IN3 | G | NO | | | |

| | | | | | | | | | |
|---|---|---|---|---|---|---|---|---|---|
| 5 | P-02-610 TWAS Pump #1 ESD Triggered | HA_02_610 | TS4 9,10 | Slot 04: IN4 | G | NC | | | |
| 6 | P-02-610 TWAS Pump #1 High Pressure Alarm | PAH_02_619 | TS4 11,12 | Slot 04: IN5 | G | NC | | | |
| 7 | T03630 TWAS Aerated Tank #1 Level Fault Status | XA_03_111 | TS4 13,14 | Slot 04: IN6 | G | NO | | | |
| 8 | T-03-630 TWAS Aerated Tank #1 High High Level | LAHH_03_112 | TS4 15,16 | Slot 04: IN7 | G | NO | | | |
| 9 | T-03-630 TWAS Aerated Tank #1 Low Low Level | LALL_03_113 | TS4 17,18 | Slot 04: IN8 | G | NO | | | |
| 10 | P-03-630 Run Status | YI_03_630 | TS4 19,20 | Slot 04: IN9 | G | NO | | | |
| 11 | P-03-630 Fault Status | XA_03_630 | TS4 21,22 | Slot 04: IN10 | G | NC | | | |
| 12 | P-03-630 Auto Status | HI_03_630 | TS4 23,24 | Slot 04: IN11 | G | NO | | | |
| 13 | P-03-630 Motor Fault | UA_03_630 | TS4 25,26 | Slot 04: IN12 | G | NO | | | |
| 14 | BFP-03-630 Feed Pump #1 ESD Triggered | HA_03_630 | TS4 27, 28 | Slot 04: IN13 | G | NC | | | |
| 15 | BFP-03-630 Feed Pump #1 High Pressure Alarm | PAH_03_669 | TS4 29, 30 | Slot 04: IN14 | G | NC | | | |
| 16 | BFP03650 Inlet Flow Totalization | FQI_03_695 | TS4 31, 32 | Slot 04: IN15 | G | NO | 1 pulse = 1L / 0.001m3 | | |
| 17 | BFP-03-650 Run Sludge Pump Cmd | YI_03_650 | TS4 33,34 | Slot 04: IN16 | G | NO | | | |
| 18 | BFP-03-650 Fault Status | XA_03_650 | TS4 35,36 | Slot 04: IN17 | G | NO | | | |
| 19 | BFP-03-650 ESD Triggered | HA_03_650 | TS4 37,38 | Slot 04: IN18 | G | NO | | | |
| 20 | P-04-970 Run Status | YI_04_970 | TS4 39,40 | Slot 04: IN19 | G | NO | | | |
| 21 | P-04-970 Fault Status | XA_04_970 | TS4 41,42 | Slot 04: IN20 | G | NC | | | |
| 22 | P-04-970 Auto Status | HI_04_970 | TS4 43,44 | Slot 04: IN21 | G | NO | | | |
| 23 | P-04-970 Motor Fault | UA_04_970 | TS4 45,46 | Slot 04: IN22 | G | NO | | | |
| 24 | P-04-970 ESD Triggered | HA_04_970 | TS4 47,48 | Slot 04: IN23 | G | NC | | | |
| 25 | P-04-970 High Pressure Alarm | PAH_04_987 | TS4 49,50 | Slot 04: IN24 | G | NC | | | |
| 26 | BFP Polymer FQIT04999 Flow Totalizer | FQI_04_999 | TS4 51,52 | Slot 04: IN25 | G | NO | 1 pulse = 1L / 0.001m3 | | |
| 27 | Incoming Potable Water Flow Totalization | FQI_04_300 | TS4 53,54 | Slot 04: IN26 | G | NO | 1 pulse = .1 m3 | Add AIT02801c2 because not on print | |
| 28 | AIT02905 H2S Gas Analyzer Fault Status | XA_02_905 | TS4 55,56 | Slot 04: IN27 | G | NC | | | |
| 29 | AIT03906 H2S Gas Analyzer Fault Status | XA_03_906 | TS4 57,58 | Slot 04: IN28 | G | NC | | | |
| 30 | AIT02801 Generator Room CO Indication | XA_02_801 | TS4 59,60 | Slot 04: IN29 | G | NC | Add AIT02801c2 because not on print | AIT03907 H2S Gas Analyzer Fault Status duplicate | XA_03_907 |
| 31 | Spare | | TS4 61,62 | Slot 04: IN30 | - | | Deleted | AIT03908 H2S Gas Analyzer Fault Status duplicate | XA_03_908 |
| 32 | Spare | | TS4 63,64 | Slot 04: IN31 | - | | Deleted | AIT03909 H2S Gas Analyzer Fault Status duplicate | XA_03_909 |
| 1 | P-02-620 Run Status | YI_02_620 | TS5 1,2 | Slot 05: IN0 | G | NO | | | |
| 2 | P-02-620 Fault Status | XA_02_620 | TS5 3,4 | Slot 05: IN1 | G | NC | | | |
| 3 | P-02-620 Auto Status | HI_02_620 | TS5 5,6 | Slot 05: IN2 | G | NO | | | |
| 4 | P-02-620 Motor Fault | UA_02_620 | TS5 7,8 | Slot 05: IN3 | G | NO | | | |
| 5 | P-02-620 TWAS Pump #2 ESD Triggered | HA_02_620 | TS5 9,10 | Slot 05: IN4 | G | NC | | | |
| 6 | P-02-620 TWAS Pump #2 High Pressure Alarm | PAH_02_639 | TS5 11,12 | Slot 05: IN5 | G | NC | | | |
| 7 | T03640 TWAS Aerated Tank #2 Level Fault Status | XA_03_121 | TS5 13,14 | Slot 05: IN6 | G | NO | | | |
| 8 | T-03-640 TWAS Aerated Tank #2 High High Level | LAHH_03_122 | TS5 15,16 | Slot 05: IN7 | G | NO | NOT CONFIRMED AT DEVICE | | |
| 9 | T-03-640 TWAS Aerated Tank #2 Low Low Level | LALL_03_123 | TS5 17,18 | Slot 05: IN8 | G | NO | NOT CONFIRMED AT DEVICE | | |
| 10 | P-03-640 Run Status | YI_03_640 | TS5 19,20 | Slot 05: IN9 | G | NO | | | |
| 11 | P-03-640 Fault Status | XA_03_640 | TS5 21,22 | Slot 05: IN10 | G | NC | | | |
| 12 | P-03-640 Auto Status | HI_03_640 | TS5 23,24 | Slot 05: IN11 | G | NO | | | |
| 13 | P-03-640 Motor Fault | UA_03_640 | TS5 25,26 | Slot 05: IN12 | G | NO | | | |
| 14 | BFP-03-640 Feed Pump #1 ESD Triggered | HA_03_640 | TS5 27, 28 | Slot 05: IN13 | G | NC | | | |
| 15 | BFP-03-640 Feed Pump #1 High Pressure Alarm | PAH_03_689 | TS5 29, 30 | Slot 05: IN14 | G | NC | | | |
| 16 | Spare | | TS5 31, 32 | Slot 05: IN15 | - | | Violia Panel does not produce | PDS04900 LCP Run Status | YI_04_900 |
| 17 | PDS-04-900 LCP Fault Status | XA_04_900 | TS5 33,34 | Slot 05: IN16 | G | NC | | | |
| 18 | PDS-04-900 LCP Low Level Alarm | LAL_04_900 | TS5 35,36 | Slot 05: IN17 | G | NC | | | |
| 19 | PDS-04-900 LCP ESD Triggered | HA_04_900 | TS5 37,38 | Slot 05: IN18 | G | NC | | | |
| 20 | P-04-980 Run Status | YI_04_980 | TS5 39,40 | Slot 05: IN19 | G | NO | | | |
| 21 | P-04-980 Fault Status | XA_04_980 | TS5 41,42 | Slot 05: IN20 | G | NC | | | |
| 22 | P-04-980 Auto Status | HI_04_980 | TS5 43,44 | Slot 05: IN21 | G | NO | | | |
| 23 | P-04-980 Motor Fault | UA_04_980 | TS5 45,46 | Slot 05: IN22 | G | NO | | | |
| 24 | P-04-980 ESD Triggered | HA_04_980 | TS5 47,48 | Slot 05: IN23 | G | NC | | | |
| 25 | P-04-980 High Pressure Alarm | PAH_04_990 | TS5 49,50 | Slot 05: IN24 | G | NC | | | |
| 26 | Generator Run Status | YI_02_800 | TS5 51,52 | Slot 05: IN25 | N | | No Genset Installed | | |
| 27 | Generator Fault Status | XA_02_800A | TS5 53,54 | Slot 05: IN26 | N | | No Genset Installed | | |
| 28 | Generator Auto Status | HI_02_800 | TS5 55,56 | Slot 05: IN27 | N | | No Genset Installed | | |
| 29 | Generator Battery Charger Fault | XA_02_800B | TS5 57,58 | Slot 05: IN28 | N | | No Genset Installed | | |
| 30 | Generator Battery Voltage Low | EAL_02_800 | TS5 59,60 | Slot 05: IN29 | N | | No Genset Installed | | |
| 31 | Generator Low Fuel Level | LAH_02_800 | TS5 61,62 | Slot 05: IN30 | N | | No Genset Installed | | |
| 32 | SPARE | | TS5 63,64 | Slot 05: IN31 | - | | Deleted | AIT03909 Gas Analyzer Fault Status | XA_03_909 |
| 1 | UPS (CPL901) Fault Status | XA_02_961 | TS6 1,2 | Slot 06: IN0 | G | NO | | | |
| 2 | UPS (CPL901) Battery Low | EAL_02_961 | TS6 3,4 | Slot 06: IN1 | G | NO | | | |
| 3 | UPS (CPL901) On Bypass | ES_02_961A | TS6 5,6 | Slot 06: IN2 | G | NO | | | |
| 4 | UPS (CPL901) On Utility | ES_02_961B | TS6 7,8 | Slot 06: IN3 | G | NO | | | |
| 5 | UPS (CPL901) On Battery | ES_02_961C | TS6 9,10 | Slot 06: IN4 | G | NO | | | |
| 6 | DC Power Supply #1 (CPL901) DC Voltage Fault Indication | XA_02_970 | TS6 11,12 | Slot 06: IN5 | G | NC | | | |
| 7 | DC Power Supply #2 (CPL901) DC Voltage Fault Indication | XA_02_971 | TS6 13,14 | Slot 06: IN6 | G | NC | | | |
| 8 | CPL907 Surge Protection Device Surge Indication | XA_02_900 | TS6 15,16 | Slot 06: IN7 | N | | Correct Part not installed | | |
| 9 | UPS Bypass Switch (CPL901) In Bypass Mode | ES_02_961 | TS6 17,18 | Slot 06: IN8 | G | NO | | | |
| 10 | | | TS6 19,20 | Slot 06: IN9 | - | | Deleted | | |
| 11 | Automatic Transfer Switch Utility Power Available | EY_02_802A | TS6 21,22 | Slot 06: IN10 | G | NO | | | |
| 12 | Automatic Transfer Switch Emergency Power Available | EY_02_802B | TS6 23,24 | Slot 06: IN11 | G | NO | | | |
| 13 | Automatic Transfer Switch On Utility Power Available | ES_02_802A | TS6 25,26 | Slot 06: IN12 | G | NO | | | |
| 14 | Automatic Transfer Switch On Emergency Power | ES_02_802B | TS6 27, 28 | Slot 06: IN13 | G | NO | | | |
| 15 | P-04-770 High Pressure Alarm | PAH_04_787 | TS6 29, 30 | Slot 06: IN14 | G | NC | | | |
| 16 | P-04-780 High Pressure Alarm | PAH_04_793 | TS6 31, 32 | Slot 06: IN15 | G | NC | | | |
| 17 | P-04-790 High Pressure Alarm | PAH_04_790 | TS6 33,34 | Slot 06: IN16 | G | NC | | | |
| 18 | Air Compressor C02401 Fault Status | XA_02_401 | TS6 35,36 | Slot 06: IN17 | G | NO | | | |
| 19 | Air Compressor C02402 Fault Status | XA_02_402 | TS6 37,38 | Slot 06: IN18 | G | NO | | | |
| 20 | Air Compressor C02401 Run Status | YI02401 | TS6 39,40 | Slot 06: IN19 | G | NO | | | |
| 21 | Air Compressor C02402 Run Status | YI02402 | TS6 41,42 | Slot 06: IN20 | G | NO | | | |
| 22 | SPARE | | TS6 43,44 | Slot 06: IN21 | - | | | | |
| 23 | SPARE | | TS6 45,46 | Slot 06: IN22 | - | | | | |
| 24 | SPARE | | TS6 47,48 | Slot 06: IN23 | - | | | | |
| 25 | SPARE | | TS6 49,50 | Slot 06: IN24 | - | | | | |
| 26 | SPARE | | TS6 51,52 | Slot 06: IN25 | - | | | | |
| 19 | SPARE | | TS6 53,54 | Slot 06: IN26 | - | | | | |
| 20 | SPARE | | TS6 55,56 | Slot 06: IN27 | - | | | | |
| 21 | SPARE | | TS6 57,58 | Slot 06: IN28 | - | | | | |
| 22 | SPARE | | TS6 59,60 | Slot 06: IN29 | - | | | | |
| 23 | SPARE | | TS6 61,62 | Slot 06: IN30 | - | | | | |
| 24 | SPARE | | TS6 63,64 | Slot 06: IN31 | - | | | | |
| | | | | | | | **RELAY OUTPUTS** | | |
| **#** | **Signal Description** | **PLC Tag** | **Terminal Strip** | **PLC Termination** | **G/N** | **NC/CO** | **COMMENTS 1** | **COMMENTS 2** | **COMMENTS 3** |
| 1 | B02110 Run Command | YC_02_110 | TS7 1,2,3 | Slot 07: DO0 | G | NO | | | |
| 2 | Sludge Pump Running Signal to BFP | | TS7 4,5,6 | Slot 07: DO1 | - | | Deleted | F02115 Run Command | YC_02_115 |
| 3 | T02210 Primary Effluent Outflow Knife Valve Close Command | ZCC_02_211 | TS7 7,8,9 | Slot 07: DO2 | G | NO | | | |
| 4 | BAD OUTPUT | | TS7 10,11,12 | Slot 07: DO3 | - | | Contractor Blew Output | | |
| 5 | T02310 Mixed Liqour BFV Open Command | ZCC_02_312 | TS7 13,14,15 | Slot 07: DO4 | G | NO | | | |
| 6 | T02310 Mixed Liqour BFV Open Command | ZCO_02_312 | TS7 16,17,18 | Slot 07: DO5 | G | NO | | | |
| 7 | P-04-770 Run Command | YC_04_770 | TS7 19,20,21 | Slot 07: DO6 | G | NO | **NO VFD** | | |
| 8 | P02610 Run Command | YC_02_610 | TS7 22,23,24 | Slot 07: DO7 | G | NO | | | |

| | | | | | | | | | |
|---|---|---|---|---|---|---|---|---|---|
| 9 | P03630 Run Command | YC_03_630 | TS7 25,26,27 | Slot 07: DO8 | G | NO | | | |
| 10 | P-04-970 Run Command | YC_04_970 | TS7 28,29,30 | Slot 07: DO9 | G | NO | NO VFD | | |
| 11 | T02310 Mixed Liqour BFV Open Command | ZCO_02_312 | TS7 31,32,33 | Slot 07: DO10 | G | NO | deleted | Process Aeration Return Solenoid Valve Open Command | ZCO_02_180 |
| 12 | Lower Secondary Treatment Alarm Horn #1 Gas Alarm | US_02_942 | TS7 34,35,36 | Slot 07: DO11 | G | NO | | | |
| 13 | Upper Secondary Treatment Alarm Horn #1 Gas Alarm | US_02_943 | TS7 37,38,39 | Slot 07: DO12 | G | NO | | | |
| 14 | Upper Secondary Treatment Alarm Horn #2 Gas Alarm | US_02_944 | TS7 40,41,42 | Slot 07: DO13 | G | NO | | | |
| 15 | SPARE | | TS7 43,44,45 | Slot 07: DO14 | - | | | | |
| 16 | SPARE | | TS7 46,47,48 | Slot 07: DO15 | - | | | | |
| 1 | B02120 Run Command | YC_02_120 | TS8 1,2,3 | Slot 08: DO0 | G | NO | | | |
| 2 | SPARE | | TS8 4,5,6 | Slot 08: DO1 | - | | Deleted | F02125 Run Command | YC_02_125 |
| 3 | T02220 Primary Effluent Outflow Knife Valve Close Command | ZCC_02_221 | TS8 7,8,9 | Slot 08: DO2 | G | NO | | | |
| 4 | BAD OUTPUT | | TS8 10,11,12 | Slot 08: DO3 | - | NO | Contractor Blew Output | | |
| 5 | T02320 Mixed Liqour BFV Close Command | ZCC_02_332 | TS8 13,14,15 | Slot 08: DO4 | G | NO | | | |
| 6 | T02320 Mixed Liqour BFV Open Command | ZCO_02_332 | TS8 16,17,18 | Slot 08: DO5 | G | NO | | | |
| 7 | P-04-780 Run Command | YC_04_780 | TS8 19,20,21 | Slot 08: DO6 | G | NO | NO VFD | | |
| 8 | P02620 Run Command | YC_02_620 | TS8 22,23,24 | Slot 08: DO7 | G | NO | | | |
| 9 | P03640 Run Command | YC_03_640 | TS8 25,26,27 | Slot 08: DO8 | G | NO | | | |
| 10 | P-04-980 Run Command | YC_04_980 | TS8 28,29,30 | Slot 08: DO9 | G | NO | NO VFD | | |
| 11 | BFP Polymer Dosing Solenoid Valve Open Command | ZCO_04_970 | TS8 31,32,33 | Slot 08: DO10 | G | NO | Spring Close | | |
| 12 | T02220 Primary Effluent Outflow Knife Valve Open Command | ZCO_02_221 | TS8 34,35,36 | Slot 08: DO11 | G | | Deleted | Primary Effluent Knife Valve Open Command | ZCO_02_221 |
| 13 | Lower Secondary Treatment Beacons H2S Alarm | US_02_922 | TS8 37,38,39 | Slot 08: DO12 | G | NO | | | |
| 14 | Upper Secondary Treatment Beacons H2S Alarm | US_02_923 | TS8 40,41,42 | Slot 08: DO13 | G | NO | | | |
| 15 | SPARE | | TS8 43,44,45 | Slot 08: DO14 | - | | | | |
| 16 | SPARE | | TS8 46,47,48 | Slot 08: DO15 | - | | | | |
| 1 | B02130 Run Command | YC_02_130 | TS9 1,2,3 | Slot 09: DO0 | G | NO | | | |
| 2 | SPARE | | TS9 4,5,6 | Slot 09: DO1 | - | | Deleted | F02135 Run Command | YC_02_135 |
| 3 | P-04-790 Run Command | YC_04_790 | TS9 7,8,9 | Slot 09: DO2 | G | NO | NO VFD | | |
| 4 | Alarm Dialer #1 | XY_02_990 | TS9 10,11,12 | Slot 09: DO3 | G | NO | | | |
| 5 | Alarm Dialer #2 | XY_02_991 | TS9 13,14,15 | Slot 09: DO4 | G | NO | | | |
| 6 | Alarm Dialer #3 | XY_02_992 | TS9 16,17,18 | Slot 09: DO5 | G | NO | | | |
| 7 | Alarm Dialer #4 | XY_02_993 | TS9 19,20,21 | Slot 09: DO6 | G | NO | | | |
| 8 | SPARE | | TS9 22,23,24 | Slot 09: DO7 | - | | | | |
| 8 | SPARE | | TS9 25,26,27 | Slot 09: DO8 | - | | | | |
| 8 | SPARE | | TS9 28,29,30 | Slot 09: DO9 | - | | | | |
| 8 | SPARE | | TS9 31,32,33 | Slot 09: DO10 | - | | | | |
| 8 | SPARE | | TS9 34,35,36 | Slot 09: DO11 | - | | | | |
| 8 | SPARE | | TS9 37,38,39 | Slot 09: DO12 | - | | | | |
| 8 | SPARE | | TS9 40,41,42 | Slot 09: DO13 | - | | | | |
| 8 | SPARE | | TS9 43,44,45 | Slot 09: DO14 | - | | | | |
| 8 | SPARE | | TS9 46,47,48 | Slot 09: DO15 | - | | | | |

**ANALOG INPUTS**

| # | Signal Description | PLC Tag | Terminal Strip | PLC Termination | G/N | RANGE | COMMENTS 1 | COMMENTS 2 | COMMENTS 3 |
|---|---|---|---|---|---|---|---|---|---|
| 1 | B02110 Speed Indication | SI_02_110 | TS10 1,2,3 | Slot 10: AI0 | G | 0-60 Hz | | | |
| 2 | FV02150 Position Indication | ZI_02_150 | TS10 4,5,6 | Slot 10: AI1 | G | 100% | | | |
| 3 | FV02155 Position Indication | ZI_02_155 | TS10 7,8,9 | Slot 10: AI2 | G | 100% | | | |
| 4 | FV02170 Position Indication | ZI_02_170 | TS10 10,11,12 | Slot 10: AI3 | G | 100% | | | |
| 5 | Process Aeration Blower Outlet Pressure Indication | PI_02_195 | TS10 13,14,15 | Slot 10: AI4 | G | 00 kPa0.72518914.5038 | need to confirm with air and mech gage | PASSIVE | |
| 6 | MBBR 1 T02210 Cell 11 DO Indication | AI_02_211 | TS10 16,17,18 | Slot 10: AI5 | G | 020 mg/L | | | |
| 7 | MBBR 1 T02210 Cell 12 DO Indication | AI_02_212 | TS10 19,20,21 | Slot 10: AI6 | G | 020 mg/L | | | |
| 8 | P-04-770 Speed Indication | SI_04_770 | TS10 22,23,24 | Slot 10: AI7 | G | 0-60 Hz | NO VFD | | |
| 9 | P02610 Speed Indication | SI_02_610 | TS10 25,26,27 | Slot 10: AI8 | G | 0-60 Hz | TWAS Pump 1 | | |
| 10 | P03630 Speed Indication | SI_03_630 | TS10 28,29,30 | Slot 10: AI9 | G | 0-60 Hz | | | |
| 11 | T03630 TWAS Tank #1 Level Indication | LI_03_111 | TS10 31,32,33 | Slot 10: AI10 | G | 0-4.235-.3m | | | |
| 12 | BFP03650 Inlet Flow Indication | FI_03_695 | TS10 34,35,36 | Slot 10: AI11 | G | 0-7200 L/hr | pulse 7.5 L // 100ms | | |
| 13 | BFP-04-900 Level indication | LI_04_900 | TS10 37,38,39 | Slot 10: AI12 | G | 0.05-4.13m | | | |
| 14 | P-04-970 Speed Indication | SI_04_970 | TS10 40,41,42 | Slot 10: AI13 | G | 0-60 Hz | NO VFD | | |
| 15 | DAF 2 Polymer Flow Indication | FI_04_799 | TS10 43,44,45 | Slot 10: AI14 | G | 0-150 L/hr | pulse 1L/ Pulse .001m3 // 100ms | | |
| 16 | BFP Polymer Outlet Flow Indication | FI_04_999 | TS10 46,47,48 | Slot 10: AI15 | G | 0-750 L/hr | pulse 1L/ Pulse .001m3 // 100ms | | |
| 1 | B02120 Speed Indication | SI_02_120 | TS11 1,2,3 | Slot 11: AI0 | G | 0-60 Hz | | | |
| 2 | Process Air MBBR 2 Flow Indication | FI_02_152 | TS11 4,5,6 | Slot 11: AI1 | G | 0-850 M3/HR | pulse 1m3 // 100ms | | |
| 3 | Process Air DAF 2 Flow Indication | FI_02_156 | TS11 7,8,9 | Slot 11: AI2 | G | 0-850 M3/HR | pulse 1m3 // 100ms | | |
| 4 | Process Air DAF 1 Flow Indication | FI_02_172 | TS11 10,11,12 | Slot 11: AI3 | G | 0-850 M3/HR | pulse 1m3 // 100ms | | |
| 5 | Effluent Final Flow Indication | FI_02_328 | TS11 13,14,15 | Slot 11: AI4 | G | 0-200 L/sec | pulse 100L // 100ms | | |
| 6 | MBBR 2 T02220 Cell 21 DO Indication | AI_02_221 | TS11 16,17,18 | Slot 11: AI5 | G | 0-20 mg/L | | | |
| 7 | MBBR 2 T02220 Cell 22 DO Indication | AI_02_222 | TS11 19,20,21 | Slot 11: AI6 | G | 0-20 mg/L | | | |
| 8 | P-04-780 Speed Indication | SI_04_780 | TS11 22,23,24 | Slot 11: AI7 | G | 0-60 Hz | NO VFD | | |
| 9 | P02620 Speed Indication | SI_02_620 | TS11 25,26,27 | Slot 11: AI8 | G | 0-60 Hz | TWAS Pump 2 | | |
| 10 | P03640 Speed Indication | SI_03_640 | TS11 28,29,30 | Slot 11: AI9 | G | 060 Hz | BFP Feed Press pump 2 | | |
| 11 | T03630 TWAS Aerated Tank #2 Level Indication | LI_03_121 | TS11 31,32,33 | Slot 11: AI10 | G | 0-4.315-.3m | | | |
| 12 | DAF Lower H2S Gas indication | AI_02_905 | TS11 34,35,36 | Slot 11: AI11 | G | 050 PPM | | | |
| 13 | BFP H2S Gas Indication | AI_03_906 | TS11 37,38,39 | Slot 11: AI12 | G | 050 PPM | | | |
| 14 | P-04-980 Speed Indication | SI_04_980 | TS11 40,41,42 | Slot 11: AI13 | G | 0-60 Hz | NO VFD | | |
| 15 | DAF 1 Polymer Flow Indication | FI_04_798 | TS11 43,44,45 | Slot 11: AI14 | G | 0150 L/hr | pulse 1L/ Pulse .001m3 // 100ms | | |
| 16 | PDS-04-700 Level Indication | LI_04_700 | TS11 46,47,48 | Slot 11: AI15 | G | 0.05-4.13m | | | |
| 1 | B02130 Speed Indication | SI_02_130 | TS12 1,2,3 | Slot 12: AI0 | G | 060 Hz | | | |
| 2 | MBBR 2 H2S Gas Indication | AI_02_907 | TS12 4,5,6 | Slot 12: AI1 | G | 050 PPM | | | |
| 3 | DAF 2 H2S Gas Indication | AI_02_908 | TS12 7,8,9 | Slot 12: AI2 | G | 050 PPM | | | |
| 4 | MBBR 1 H2S Gas Indication | AI_02_909 | TS12 10,11,12 | Slot 12: AI3 | G | 050 PPM | | | |
| 5 | BFP HS2 Gas Indication | AI_03_910 | TS12 13,14,15 | Slot 12: AI4 | G | 050 PPM | | | |
| 6 | Generator Room CO Indication | AI_02_801 | TS12 16,17,18 | Slot 12: AI5 | G | 02000 PPM | | | |
| 7 | FQI04300 Potable Water Flow Indication | FI_04_300 | TS12 19,20,21 | Slot 12: AI6 | G | 1250GPM // 078.8625L | pulse 10m3 // 100ms | | |
| 8 | P-04-790 Speed Indication | SI_04_790 | TS12 22,23,24 | Slot 12: AI7 | G | 0-60 Hz | NO VFD | | |
| 9 | PDTI_03_630 TWAS Pressure Differential | PDT_03_630 | TS12 25,26,27 | Slot 12: AI8 | G | 0-10 psi | | Pressure Indication PIT-03-630 | PI_03_630 |
| 10 | SPARE | | TS12 28,29,30 | Slot 12: AI9 | - | | Deleted | Pressure Indication PIT-03-640 | PI_03_640 |
| 11 | Temerapture Indicator TIT02953 Electrical Room | TI_02_953 | TS12 31,32,33 | Slot 12: AI10 | G | 5050 DegC | Added | PASSIVE | |
| 12 | Temerapture Indicator TIT02954 DAF Room | TI_02_954 | TS12 34,35,36 | Slot 12: AI11 | G | 5050 DegC | Added | PASSIVE | |
| 13 | Temerapture Indicator TIT02955 Belt Press Filter Door | TI_02_955 | TS12 37,38,39 | Slot 12: AI12 | G | 5050 DegC | Added | PASSIVE | |
| 14 | SPARE | | TS12 40,41,42 | Slot 12: AI13 | - | | | | |
| 15 | SPARE | | TS12 43,44,45 | Slot 12: AI14 | - | | | | |
| 16 | SPARE | | TS12 46,47,48 | Slot 12: AI15 | - | | | | |

**ANALOG OUTPUTS**

| # | Signal Description | PLC Tag | Terminal Strip | PLC Termination | G/N | RANGE | COMMENTS 1 | COMMENTS 2 | COMMENTS 3 |
|---|---|---|---|---|---|---|---|---|---|
| 1 | B02110 Speed Command | SC_02_110 | TS13 1,2 | Slot 13: AO0 | G | 60 | | | |
| 2 | B02120 Speed Command | SC_02_120 | TS13 3,4 | Slot 13: AO1 | G | 60 | | | |
| 3 | B02130 Speed Command | SC_02_130 | TS13 5,6 | Slot 13: AO2 | G | 60 | | | |
| 4 | FV02150 Position Command | ZC_02_150 | TS13 7,8 | Slot 13: AO3 | G | 100 | | | |
| 5 | FV02155 Position Command | ZC_02_155 | TS13 9,10 | Slot 13: AO4 | G | 100 | | | |
| 6 | FV02170 Position Command | ZC_02_170 | TS13 11,12 | Slot 13: AO5 | G | 100 | | | |
| 7 | P-04-770 Speed Command | SC_04_770 | TS13 13,14 | Slot 13: AO6 | G | 60 | NO VFD | | |
| 8 | P-04-780 Speed Command | SC_04_780 | TS13 15,16 | Slot 13: AO7 | G | 60 | NO VFD | | |
| 9 | P-04-790 Speed Command | SC_04_790 | TS14 1,2 | Slot 14: AO0 | G | 60 | NO VFD | | |
| 10 | P02610 Speed Command | SC_02_610 | TS14 3,4 | Slot 14: AO1 | G | 60 | | | |

| | | | | | | | | | | |
|---|---|---|---|---|---|---|---|---|---|---|
| 11 | P02620 Speed Command | SC_02_620 | TS14 5,6 | Slot 14: AO2 | G | 60 | | | |
| 12 | P03630 Speed Command | SC_03_630 | TS14 7,8 | Slot 14: AO3 | G | 60 | | | |
| 13 | P03640 Speed Command | SC_03_640 | TS14 9,10 | Slot 14: AO4 | G | 60 | | | |
| 14 | P-04-970 Speed Command | SC_04_970 | TS14 11,12 | Slot 14: AO5 | G | 60 | NO VFD | | |
| 15 | P-04-980 Speed Command | SC_04_980 | TS14 13,14 | Slot 14: AO6 | G | 60 | NO VFD | | |
| 16 | SPARE | | TS14 15,16 | Slot 14: AO7 | - | | | | |

**Custom Tags / Alarms**

| # | Signal Description | PLC Tag | Terminal Strip | PLC Termination | G/N | NC/CO | COMMENTS 1 | COMMENTS 2 | COMMENTS 3 |
|---|---|---|---|---|---|---|---|---|---|
| | DAF #1 Run Status | YI_02_310 | | | G | | | | |
| | DAF #1 Fault Status | XA_02_310 | | | G | | | | |
| | DAF #2 Run Status | YI_02_320 | | | G | | | | |
| | DAF #2 Fault Status | XA_02_320 | | | G | | | | |
| | T02310 DAF #1 High Level Alarm | LAH_02_330 | | | G | | | | |
| | DAF #1 Thickened Water High Level Alarm | LAH_02_332 | | | G | | | | |
| | T02320 DAF #2 High Level Alarm | LAH_03_342 | | | G | | | | |
| | DAF #2 Thickened Water High Level Alarm | LAH_02_342 | | | G | | | | |

## I/O CHECK COMPLETION STATUS

| | | |
|---|---|---|
| **DELAYED** | 0 | |
| **RFI** | 0 | |
| **G** | 234 | |
| **N** | 7 | |
| **Total [Without DELAYED & RFI]** | 241 | 97.10% |
| **Total [With DELAYED & RFI]** | 241 | 100.00% |