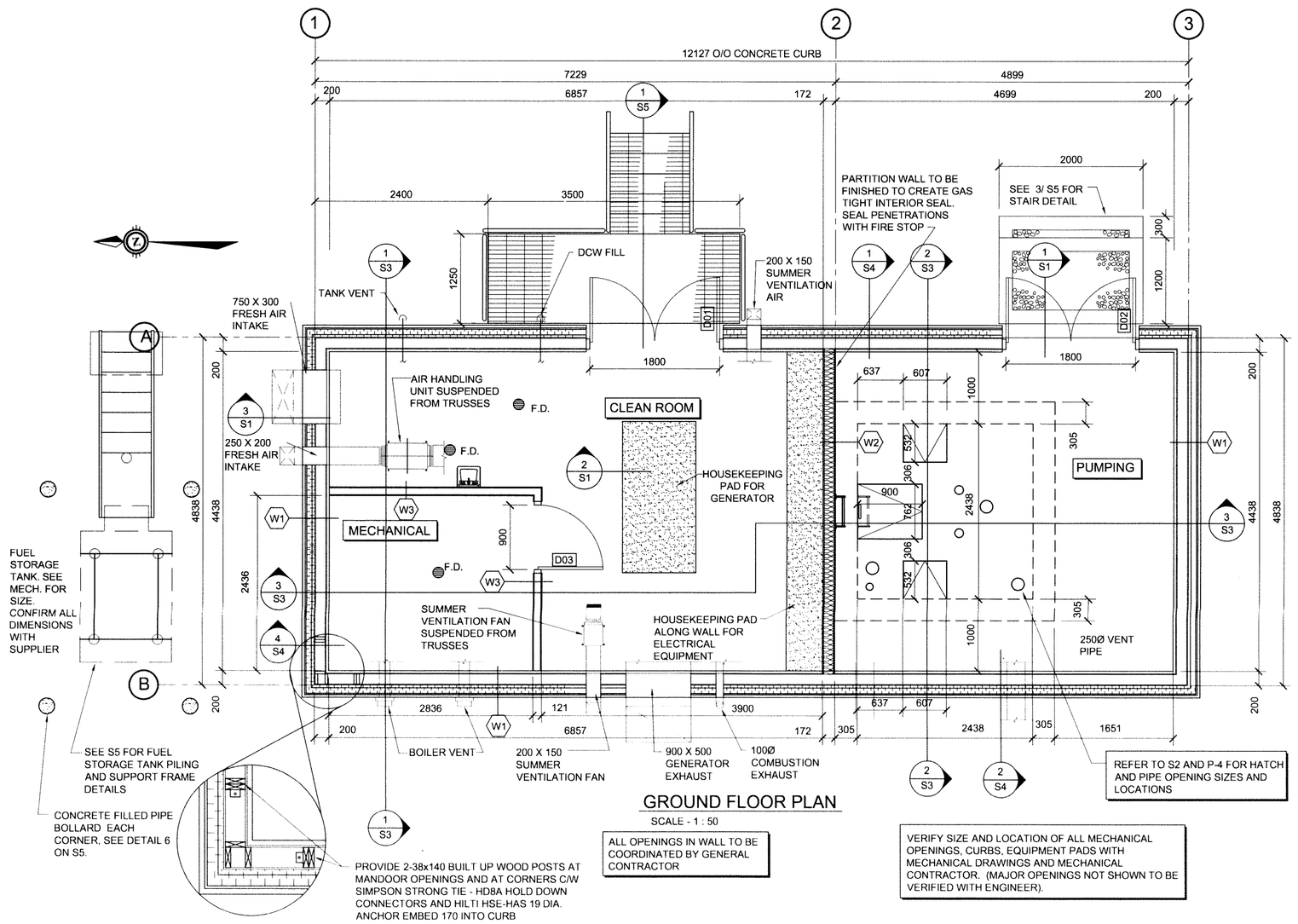

GROUND FLOOR PLAN

SCALE - 1 : 50

ALL OPENINGS IN WALL TO BE COORDINATED BY GENERAL CONTRACTOR

VERIFY SIZE AND LOCATION OF ALL MECHANICAL OPENINGS, CURBS, EQUIPMENT PADS WITH MECHANICAL DRAWINGS AND MECHANICAL CONTRACTOR. (MAJOR OPENINGS NOT SHOWN TO BE VERIFIED WITH ENGINEER).

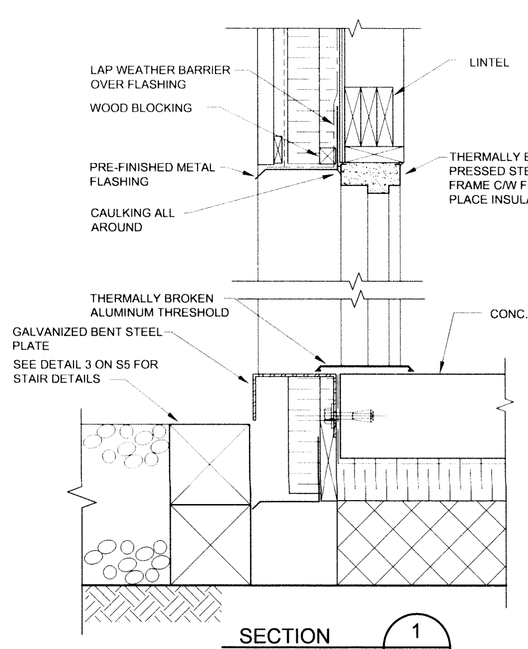

SECTION 1/S1

SCALE - 1 : 10

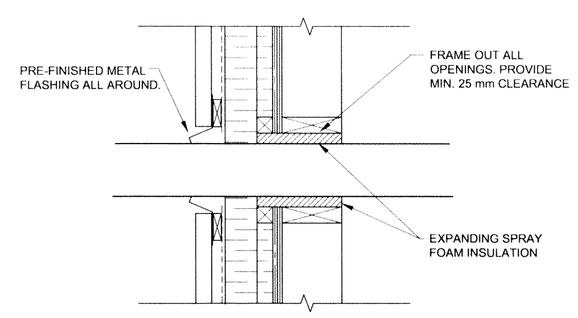

WALL PENETRATION SECTION 3/S1

SCALE - 1 : 10

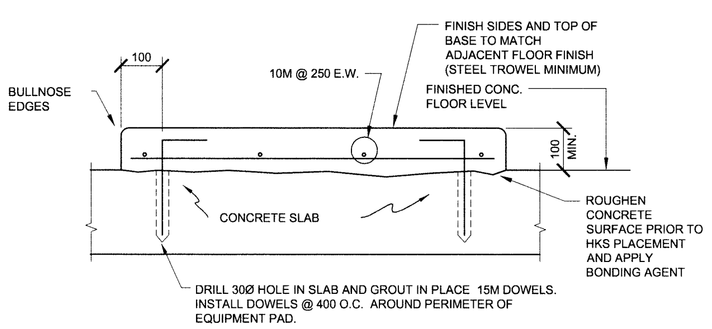

FOR EXACT LOCATIONS AND SIZE OF CONCRETE PAD REFER TO MECHANICAL AND ELECTRICAL EQUIPMENT SHOP DRAWINGS.

GROUT UNDER EQUIPMENT AS REQUIRED

HKS HOUSEKEEPING SLAB

TYPICAL HOUSEKEEPING SLAB (HKS)

REQUIRED UNDER ALL FLOOR MOUNTED EQUIPMENT OR PEDESTALS

SECTION 2/S1

SCALE - 1 : 10

WALL TYPES

W1

PRE-FINISHED METAL CLADDING
19x64 HORIZONTAL WOOD STRAPPING @ 610 O.C.
WEATHER BARRIER
75 mm RIGID INSULATION - RSI 2.8 (R16) ON VERTICAL Z-GIRTS @ 610 mm O.C.
38 x 38 HORZ. WOOD STRAPPING @ 610 O.C.
38 mm RIGID INSULATION
MEMBRANE VAPOUR BARRIER
12 mm OSB SHEATHING
38 x 140 STUDS @ 400 O.C.
9 mm OSB SHEATHING
PRE-FINISHED METAL LINER

W2

1 HOUR FIRE RATED WALL
(NBC - DESIGN W1a)

PREFINISHED METAL LINER
15.9 mm TYPE X GYPSUM BOARD
6 MIL POLY V.B. (CLEAN ROOM SIDE)
R20 BATT INSULATION
38 x 140 STUDS @ 400 O.C.
15.9 mm TYPE X GYPSUM BOARD
PREFINISHED METAL LINER

W3

1 HOUR FIRE RATED WALL
(NBC - DESIGN W1d)

PREFINISHED METAL LINER
15.9 mm TYPE X GYPSUM BOARD
38 x 89 STUDS @ 400 O.C.
15.9 mm TYPE X GYPSUM BOARD
PREFINISHED METAL LINER

DOOR TYPES

D01 & D02

TWO INSULATED METAL DOORS
PAINTED, 900 x 2150 x45
DOOR CLOSER
1-½ PR. HEAVY DUTY HINGES
ASTRAGAL
WEATHER STRIPPING
DOOR SWEEP
ALUMINUM THRESHOLD
LEVERED LOCKSET
PRESSED STEEL FRAME PAINTED
TYP. AT TWO LOCATIONS

D03

HOLLOW METAL DOOR
PAINTED, 900 x 2150 x45
DOOR CLOSER
1-½ PR. HEAVY DUTY HINGES
PASSAGE SET
¾ HOUR RATED PRESSED STEEL FRAME PAINTED

GENERAL NOTES

1. Check all dimensions on structural drawings with other drawings. Report any inconsistencies before proceeding with the work. DO NOT SCALE THESE DRAWINGS.
2. All work shall comply with current provisions of the National Building Code, the Workplace Safety and Insurance Board and best trade practices. Work shall comply with all local and provincial regulations and with applicable C.S.A. standards. In all cases, the latest editions of codes and standards shall apply.
3. Structural design complies with the minimum standards of Part 9 of the National Building Code 2005.
4. Before submitting tenders contractors shall carefully examine existing conditions to establish the extent of the work.
5. Locate all buried services prior to excavation. The contractor shall be responsible for all temporary bracing, shoring and dewatering necessary to undertake the work.
6. The contractor is responsible for removing excess materials and cleaning up on completion of the work.
7. The contractor shall verify dimensions before construction and report discrepancies before proceeding with the work.

FOUNDATIONS (PILES)

1. Pile installation to be monitored by a qualified Geotechnical Engineer or Technologist.
2. Pile holes should be installed when the active layer is frozen. This will allow clean, dry holes to be drilled.
3. The pile shall be vibrated to insure a continuous column sand slurry around the outside of the pile.
4. Maintain accurate records of slurry volumes and pile depths.
5. Once the pile has been installed, a wedge can be used to ensure plumbness and line.
6. Ensure that the pile and bracing portion within the active zone have a bond breaker system installed.
7. Freeze back around the piles may take 2 - 3 months. Install thermistors on piles at various depths along the pile surface to monitor freeze back. Do not apply structural loads until pile freezeback is complete.
8. Contractor to confirm with equipment suppliers, dimensions and all other critical details prior to construction. Report discrepancies and obtain approval prior to proceeding with construction.
9. Construction methods requiring temporary shoring, or bracing shall be sumitted to the Consultant for review. The contractor shall retain a Professional Engineer, registered in the Northwest Territories, Nunavut, to perform and take responsibilty for any shoring or other designs required to complete the construction.

MATERIALS SPECIFICATIONS

1. Pipe piles: Hollow structural steel sections, minimum yield strength of 350 MPa, size and wall thickness as indicated on the drawings. 141 mm diameter x 6.4 mm thickness, sandblasted.
2. Sand slurry: shall not contain particles greater than 5mm or have less than 10% fines passing No. 200 sieve size. The sand should have a salinity of less than 5 ppt.
3. Water for slurry : potable with a placement temperature less than 10° C.
4. Concrete - materials to CSA-A23.1-04. Compressive strength minimum 30 MPa. 6% +/- 1% entrained air for exterior concrete. Slump 70 +/- 20mm. Maximum aggregate size 20 mm. Type 10 cement.
5. Formwork - to CSA-A23.1-04. Use only new forming materials for architecturally exposed surfaces. Form release agent shall be nonstaining, compatible with finishes where applicable.
6. Rebar - deformed billet steel bars to CAN/CSA G30.18-M, Grade 400. Type W for welded rebar.
7. Mesh - welded wire fabric to CSA-G30.5-M.
8. Rolled structural steel shapes - General requirements to CAN/CSA-S16-01, rolled shapes to CSA-G40.21, 350W minimum. Channels, angles and plates 300W.
9. Hollow structural sections - to CAN/CSA-G40.20, 350W, Class H.
10. Bolts, nuts and washers - General requirements to CAN/CSA-S16-01, ASTM A325M. Hot dipped galvanized as required.
11. Welding : to CSA W59, E480XXCH or LH basic electrodes conforming to CSA-W48.3 Welding shall be performed only by companies certified by Canadian Welding Bureau as follows: Fusion Welding - certified to CSA W47.1; Resistance Welding - certified to CSA W55.3. Workmanship to best trade practices for cold weather installations.
12. Prime paint to Structural Steel - to CAN/CGSB-1.40-97, one shop coat, one touch up field coat.
13. Wood Framing Material - SPF Grade No. 1 or 2. All lumber in direct contact with concrete, soil or moisture to be presure treated.
14. Rough Carpentry - Timber Construction shall conform to Part 9 of NBC 2005 and CSA 086-01.
15. Nails and Staples - materials to CSA-BIII. Common and spiral ardox nails to be galvanized.
16. Prefinished Metal Roofing - Sheet steel to ASTM A653/A653M, commercial quality, galvanized, Z275 coating, designation, factory precoated with paint finish.

    Colour: White White QC8317
    Profile: Ideal Roofing Pocket Rib
    Class: FIS
    Thickness: 0.53 mm base metal thickness
17. Preformed Cladding/Siding - Sheet steel to ASTM A653/A653M, grade A, galvanized, Z275 coating designation, factory precoated with paint finish, 2 coat system dry paint film thickness of 0.025 mm +/- 0.005 mm both faces conforming to film test procedures described in CSSB1 Bulletin No. 5 and ASTM D1005, Stelco 5000 Series or equal.

    Colour: White White QC16076
    Profile: 36 mm deep x 190 mm flute spaces, preformed interlocking joints, acceptable material V/c West CL522R with rib profile or equal
    Thickness: 0.61 mm base metal thickness
    Fascia and Trims: same colour and thickness as cladding
18. Rigid Cellular Polystyrene: to CAN/ULC-S701, type 4, compressive strength at 5% deformation 275 kPa, thermal resistance of 0.87 RSI/25 mm, thicknesses as specified. Acceptable material Roofmate or Styrofoam SM.
19. Girts: "Z" profile, minimum 1.3 mm thick, height to suit insulation thickness, formed from galvanized sheet steel to ASTM A653, Grade A, with zinc coating designation Z275, with 50 mm wide bottom flange and 64 mm wide top flange. Terminations: perimeter framing of "L" or "C" profiles to match "Z" girts.
20. Fasteners for girts: epoxy coated 4mm dia. steel screws of sufficient length to penetrate through deck.
21. Fasteners for metal roofing: self-drilling cadmium plated steel purpose made, head colour same as exterior steel roofing, neoprene washer exposure.
22. Fasteners for metal cladding: to ASTM B18.6.4 cadmium plated steel purpose made, head colour same as exterior sheet, dished steel/neoprene.
23. Sealants: single component acrylic, colour to match roofing/ cladding.

REINFORCEMENT PLACEMENT

1. Minimum clear cover
   - For concrete placed against earth.....75 mm
   - For concrete placed in forms but in contact with earth or weather..... 50 mm
   - Interior slabs and walls.....25 mm u/n
   - Interior beams .....40 mm
   - At deck slab drains..... 45 mm
2. Laps

   - lap all bars 36 bar diameters or 450 mm minimum, whichever is greater, unless otherwise indicated.
3. Chairs for support of of slab reinforcing spaced at maximum of 1.0 m in either direction. Supply support bars, chairs and carriers as necessary.

DESIGN SERVICE LOADS

DEAD LOADS

ROOF (Self weight)	1.35 kPa
Superimposed Loads (Mech. Allowance)	0.5 kPa
FLOOR	4.8 kPa

LIVE LOADS

FLOOR	7.2 kPa
ROOF SNOW LOAD	2.52 kPa

WIND LOAD (Governs)
q(1:10) = 0.39 kPa
q(1:50) = 0.75 kPa
Cp Cg = 1.95 for walls
Ce = 0.9
Iw = 1.25

SEISMIC LOAD
Site Classification C
Sa (0.2) = 0.13
Sa (0.5) = 0.086
Sa (1.0) = 0.049
Sa (2.0) = 0.013
Fa = 1.3
Fv = 1.4
S (T = 0.2) = 0.13
S (T = 0.5) = 0.086
S (T = 1.0) = 0.049
S (T = 2.0) = 0.013
S (T > 4.0) = 0.006
Ro = 1.7
R_D = 3.0
I_E = 1.5 No Discontinuities

$$V = \frac{S(Ta)\, M_V\, I_E\, W}{(Rd\ Ro)}$$

$$V = \frac{(0.13)(1.0)(1.5)(168\ kN)}{(3.0)\ (1.7)}$$

= 6.43 kN

Roof & Wall Sheathing:
Douglas Fir Plywood Sheathing, use H-Clips as required

Plywood Nailing Requirements	
Wall Sheathing (Both Faces)	
@ Panel Edges	150 mm O.C.
@ Intermediate Framing	300 mm O.C.
Roof Sheathing	
@ Panel Edges	150 mm O.C.
@ Intermediate Framing	300 mm O.C.
76 mm (3") Long Common Nails.	

KEY PLAN

LEGEND

NOTES: GENERAL CONTRACTOR TO VERIFY ALL DIMENSIONS WITH FINAL ARCHITECTURAL AND MECHANICAL DRAWINGS. NOTIFY THE ENGINEERS OF ANY ERRORS AND / OR OMISSIONS PRIOR TO CONSTRUCTION FOR DIRECTION. DO NOT SCALE THIS DRAWING.

No.	DESCRIPTION	DATE	BY	APP'D
2	ISSUED FOR CONSTRUCTION	10/05/2010	M.N.	K.A.B.
1	ISSUED FOR TENDER	15/06/2009	M.N.	K.A.B.
0	90% SUBMISSION	23/04/2009	M.N.	K.A.B.

R E V I S I O N S

REGISTERED PROFESSIONAL ENGINEER K.A. BAKER LICENSED N.W.T.

PERMIT TO PRACTICE
TROW ASSOCIATES INC.
Signature Keith A Baker
Date May 10/2010
PERMIT NUMBER: P184
The Association of Professional Engineers, Geologists and Geophysicists of the NWT/NU

Trow Associates Inc.
154 Colonnade Road South
Ottawa, Ont. K2E 7J5
Tel:(613)225-9940
Fax:(613)225-7337

CLIENT
CITY OF IQALUIT

PROJECT
LIFT STATION NO. 2 MODIFICATIONS

TITLE
GROUND FLOOR PLAN, SECTIONS AND GENERAL NOTES

design by	K.A. BAKER	project no.	OTBS00019365A
drawn by	M. NUGENT	drawing no.	S1
checked by	K.A. BAKER		
date	03/03/2009		
scale	AS NOTED		