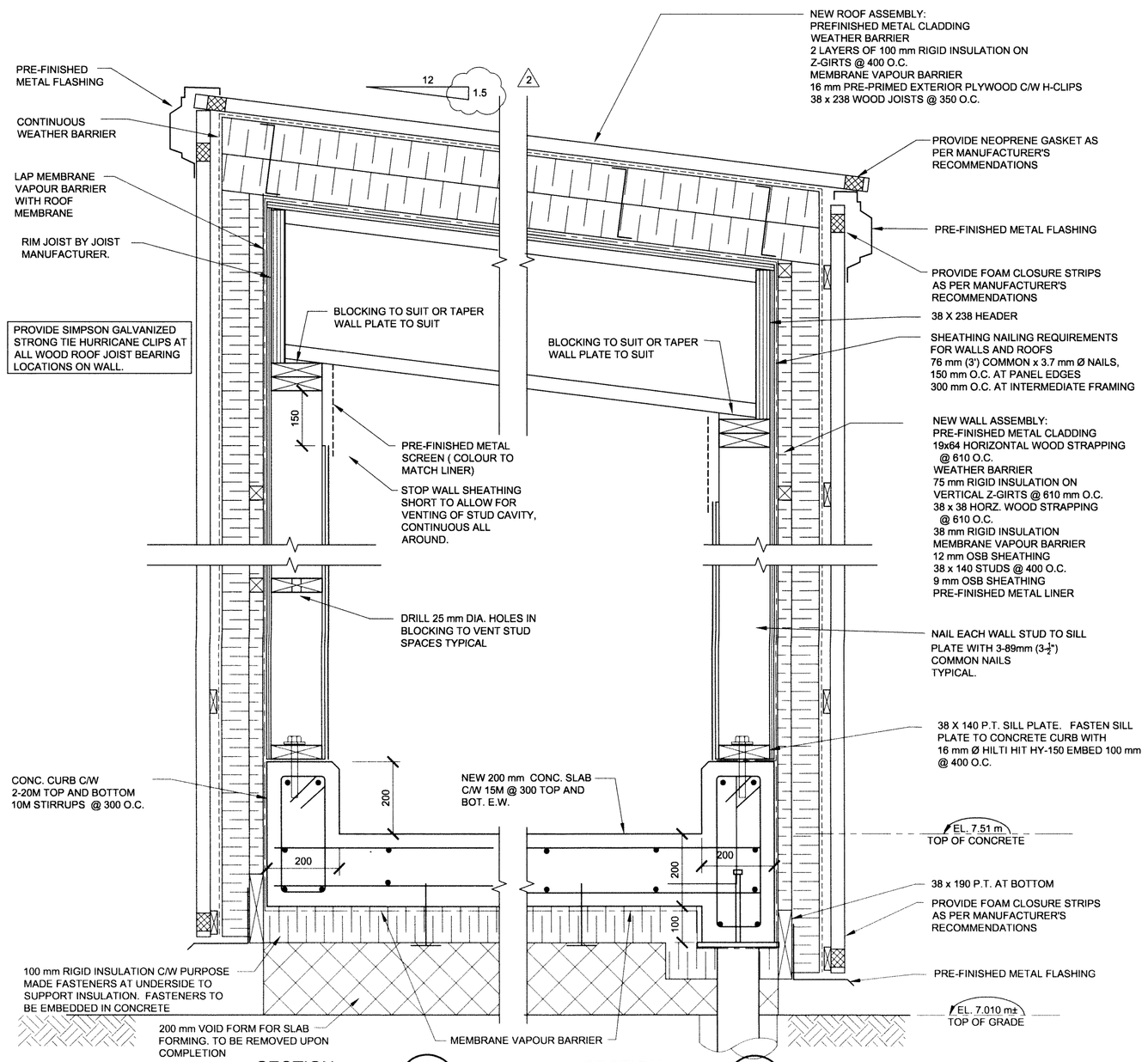

SECTION 1 — S1, S2, S3
SCALE - 1 : 10

SECTION 2 — S1, S2, S3
SCALE - 1 : 10

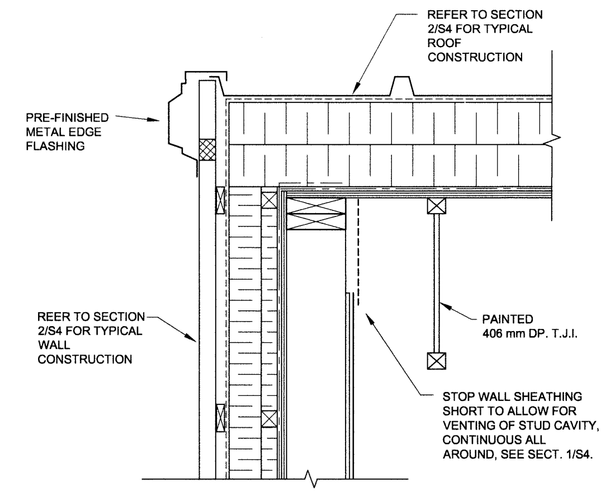

SECTION 3 — S2, S3
SCALE - 1 : 10

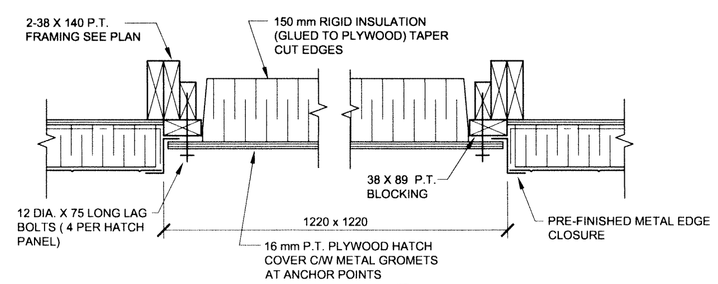

SECTION 8 — S2, S3
SCALE - 1 : 10

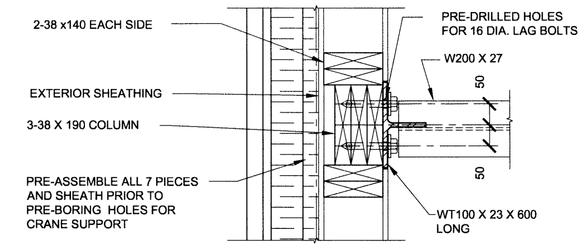

PLAN VIEW AT CRANE BEAM SUPPORT COLUMN

SCALE - 1 : 10

TOP OF CRANE BEAM TO BE FINALIZED ONCE CRANE SELECTION MADE AND CLEARANCE REQUIREMENTS OF CRANE MODEL COORDINATED.

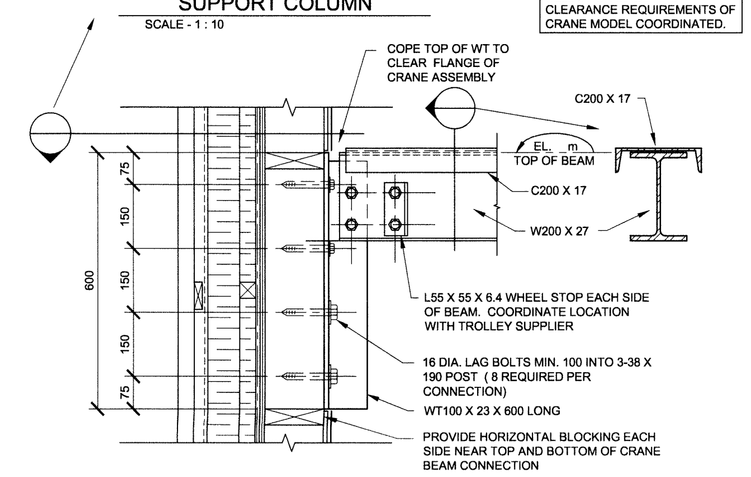

SECTION 7 — S2, S3
SCALE - 1 : 10

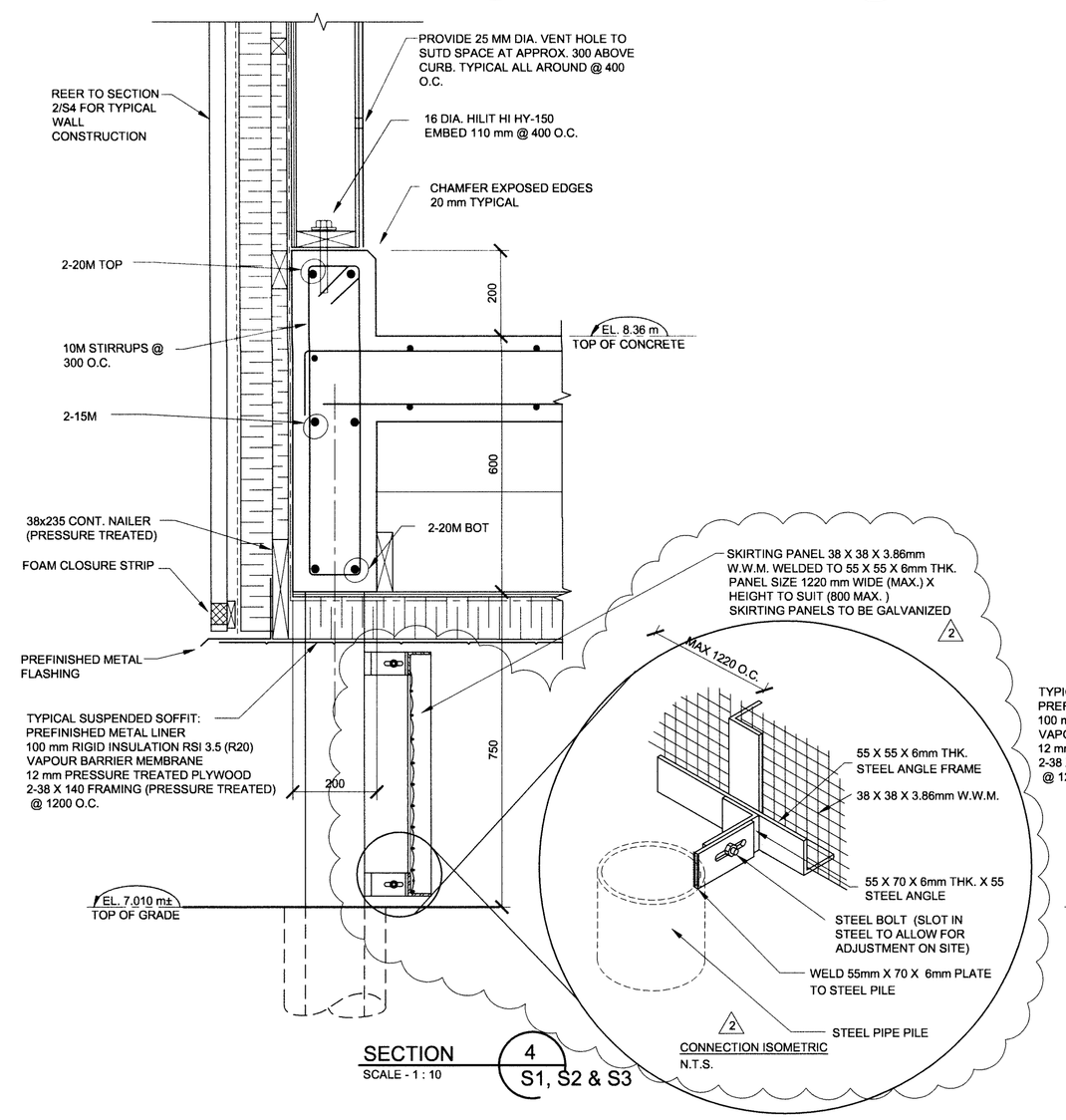

SECTION 4 — S1, S2 & S3
SCALE - 1 : 10

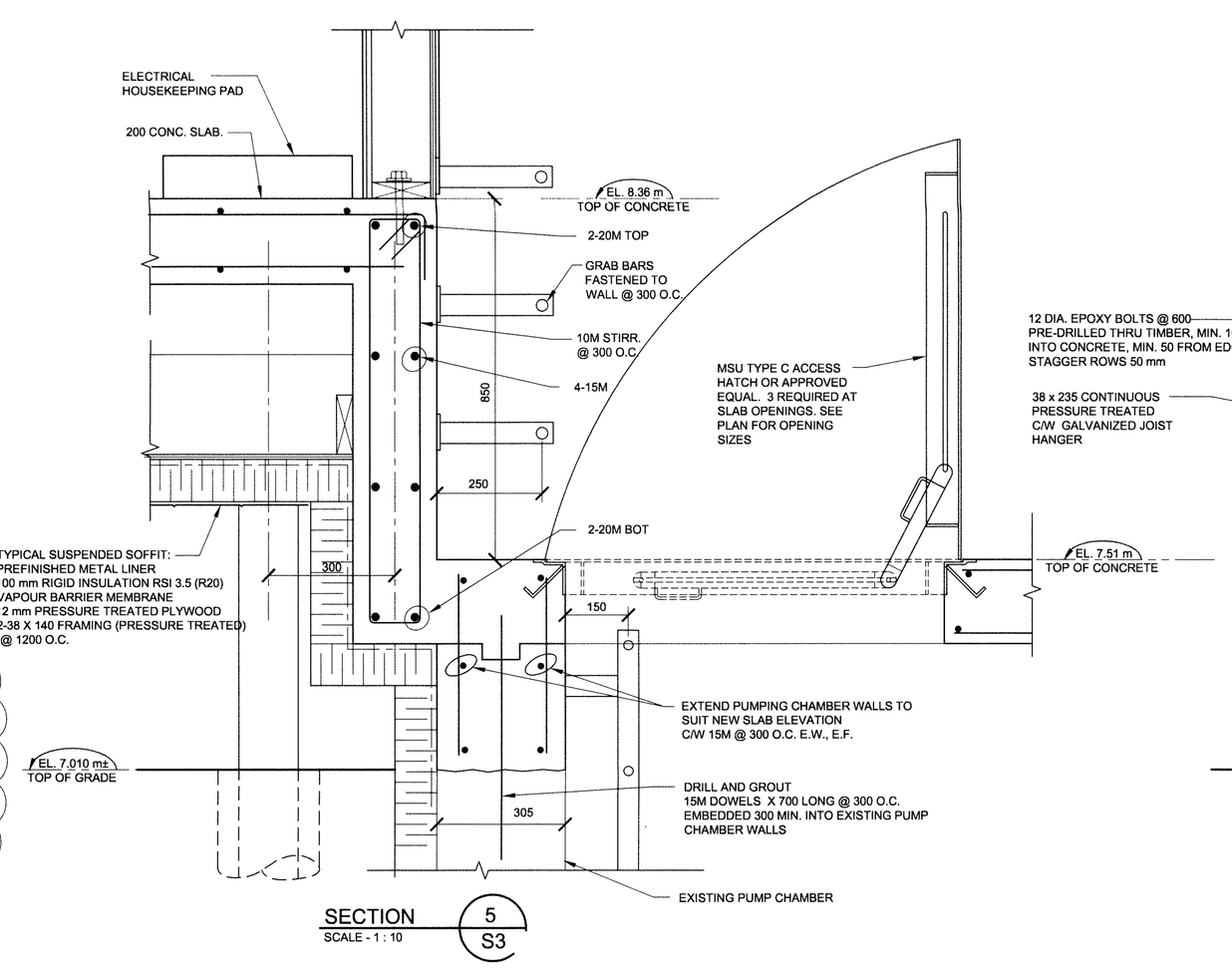

SECTION 5 — S3
SCALE - 1 : 10

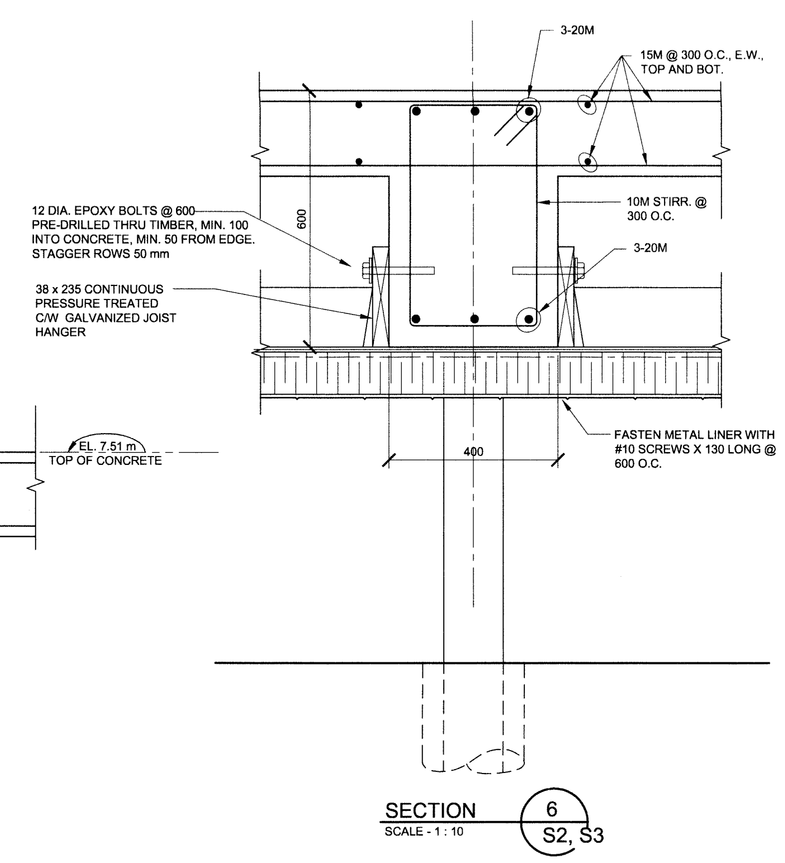

SECTION 6 — S2, S3
SCALE - 1 : 10

KEY PLAN

LEGEND

NOTES: GENERAL CONTRACTOR TO VERIFY ALL DIMENSIONS WITH FINAL ARCHITECTURAL AND MECHANICAL DRAWINGS. NOTIFY THE ENGINEERS OF ANY ERRORS AND / OR OMISSIONS PRIOR TO CONSTRUCTION FOR DIRECTION. DO NOT SCALE THIS DRAWING.

No.	DESCRIPTION	DATE	BY	APP'D
2	ISSUED FOR CONSTRUCTION	10/05/2010	M.N.	K.A.B.
1	ISSUED FOR TENDER	15/06/2009	M.N.	K.A.B.
0	90% SUBMISSION	23/04/2009	M.N.	K.A.B.

R E V I S I O N S

REGISTERED PROFESSIONAL ENGINEER — K.A. BAKER — LICENSED — N.W.T.

PERMIT TO PRACTICE
TROW ASSOCIATES INC.
Signature Kevin A. Baker
Date May 10/2010
PERMIT NUMBER: P184
The Association of Professional Engineers, Geologists and Geophysicists of the NWT/NU

Trow Associates Inc.
154 Colonnade Road South
Ottawa, Ont. K2E 7J5
Tel:(613)225-9940
Fax:(613)225-7337

CLIENT
CITY OF IQALUIT

PROJECT
LIFT STATION NO. 2 MODIFICATIONS

TITLE
SECTIONS

design by	K.A. BAKER	project no.	OTBS00019365A
drawn by	M. NUGENT	drawing no.	S4
checked by	K.A. BAKER		
date	03/03/2009		
scale	SECTIONS		