FOR HMI REQUIREMENTS REFER TO SPECIFICATIONS

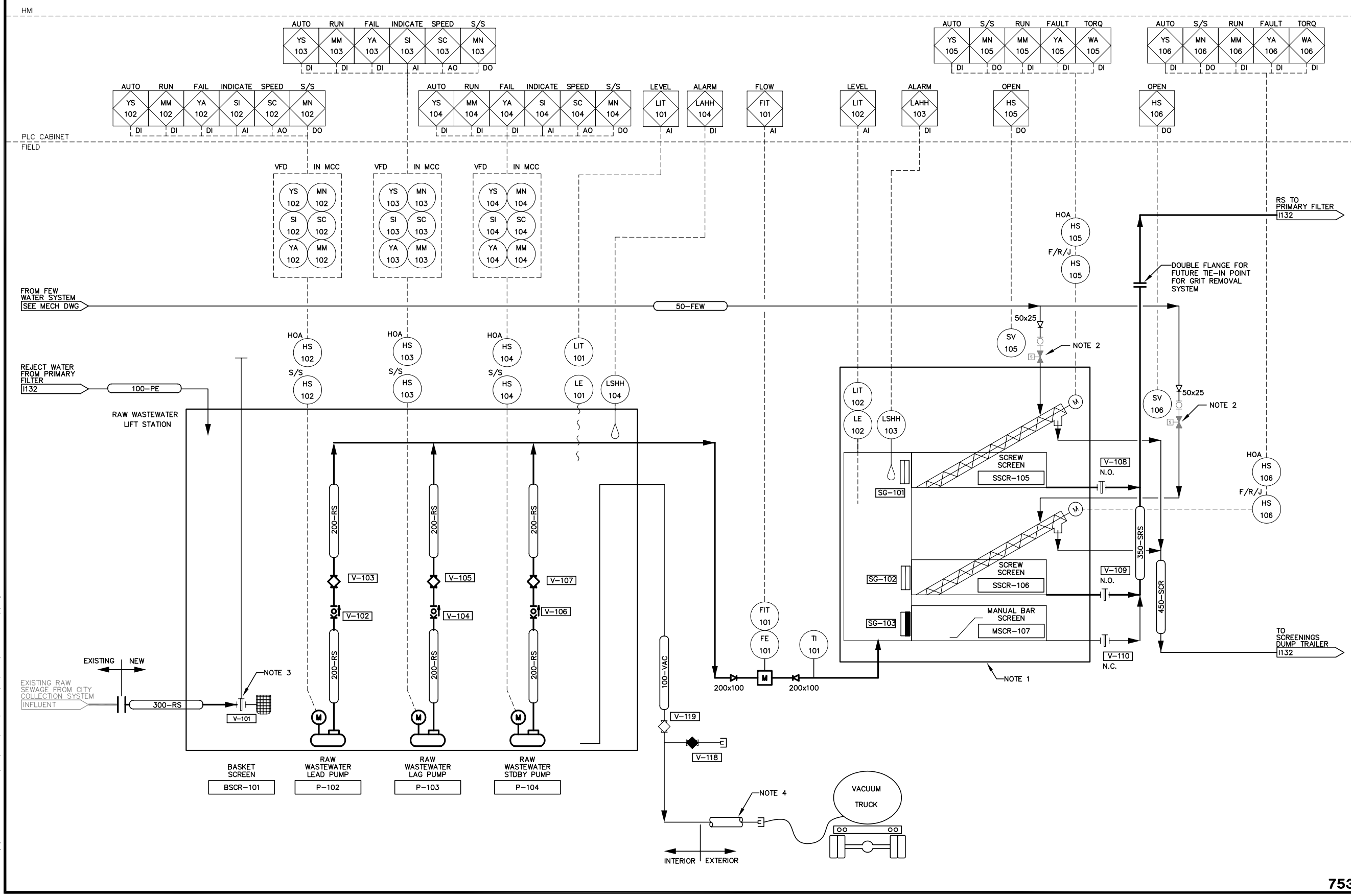

EarthTech
A Tyco International Ltd. Company
17203-103rd Avenue
EDMONTON, ALBERTA
T5S 1J4 CANADA
Tel. 780-486-6800
Fax. 780-486-2121
www.earthtech.ca

NOTES:

1. EXISTING SCREW SCREENS AND BYPASS CHANNEL ARE TO BE RELOCATED TO THE NEW HEADWORKS BUILDING.

2. EXISTING VALVES AND PIPING TO BE RELOCATED.

3. REPLACE EXISTING VALVE AND PROVIDE VALVE STEM EXTENSION AND MANUAL OPERATOR.

4. INSULATE AND HEAT TRACE EXTERNAL PIPE CONNECTION.

PERMIT TO PRACTICE
EARTH TECH (CANADA) INC.
Signature _____
Date _____
PERMIT NUMBER: P 005
The Association of Professional Engineers, Geologists and Geophysicists of the NWT/NU

Stamp

REGISTERED PROFESSIONAL ENGINEER
M.J. WHALLEY
LICENSEE
NWT NU

No.	Date	Description
0	2005 03/14	ISSUED FOR TENDER

REVISIONS

Iqaluit
CITY of IQALUIT, Nunavut

Design: SNS/TDC/MJW
Drawn: DKB
Approved:
Checked:

Project Title
CITY OF IQALUIT WASTEWATER TREATMENT PLANT PHASE 1

Drawing Title
PUMPING & PRELIMINARY SCREENING P&ID

Scale: N.T.S.
Project No.: 75360
Date: 08.03.05
Drawing No.: 75360-TBLOCK (D)
Revision: 0

LAST SAVED: 9/3/2005 8:37 AM L:\work\75000\75360\02c-CAD\GFI\REFS\75360-TBLOCK (D).dwg