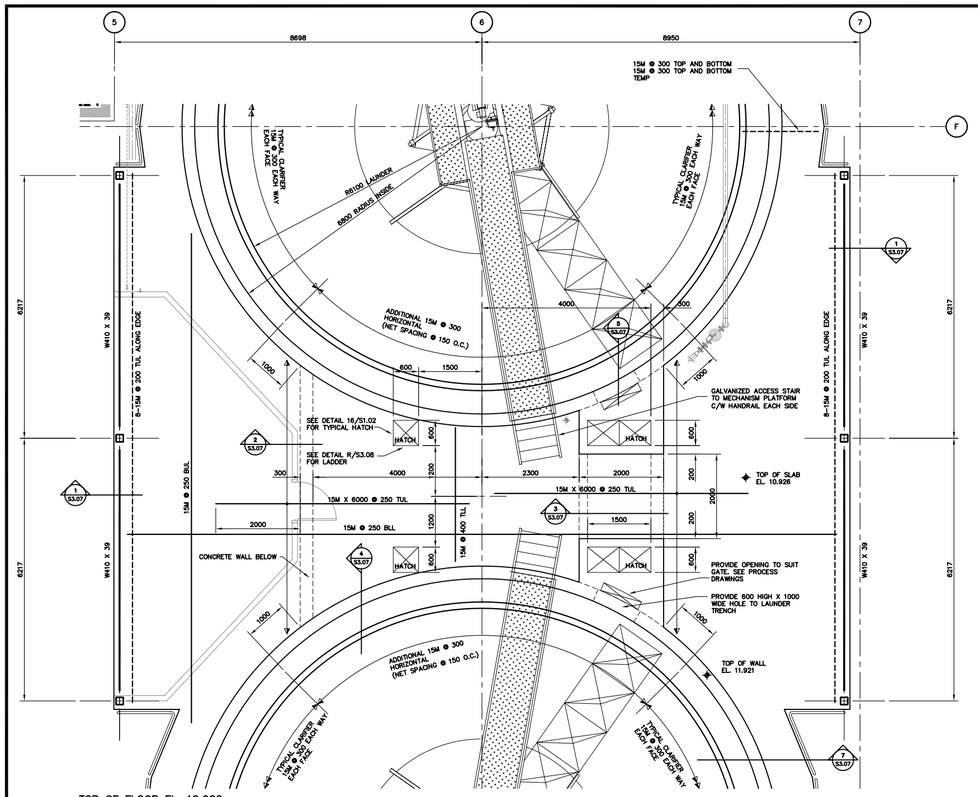


TOP OF FLOOR EL. 10.926
UPPER CLARIFIER PLAN
1:50

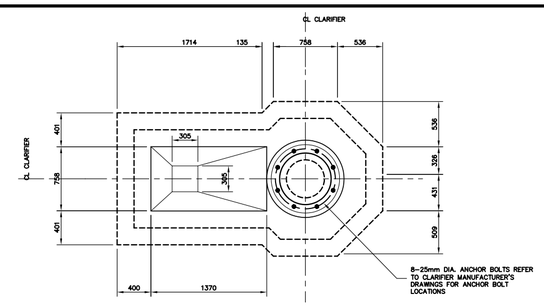


CENTER PEDESTAL
PLAN
1:25

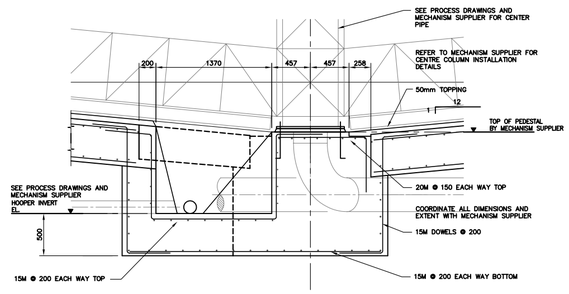


CENTER PEDESTAL
SECTION
1:25

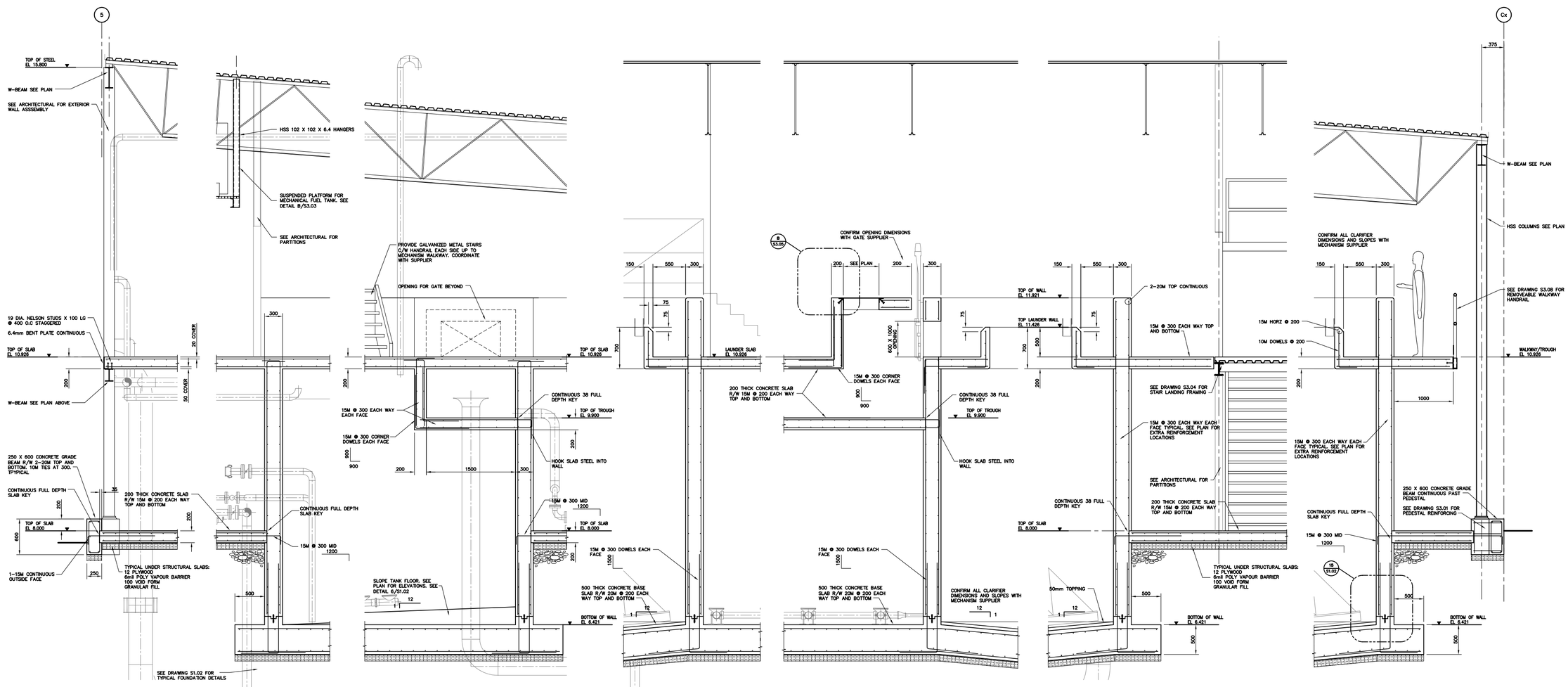


1 / S3.07 SECTION 1:25
2 / S3.07 SECTION 1:25
3 / S3.07 SECTION 1:25
4 / S3.07 SECTION 1:25
5 / S3.07 SECTION 1:25
6 / S3.07 SECTION 1:25
7 / S3.07 SECTION 1:25


EarthTech
A Tyco International Ltd. Company
17203-103rd Avenue
EDMONTON, ALBERTA
T5S 1J4 CANADA
Tel. 780-488-6800
Fax. 780-488-2121
www.earthtech.ca


**PRELIMINARY**
**Not For Construction**
OCT.15.2004

| No. | Date | Description |
|---|---|---|
| B | 2004 OCT.15 | ISSUED FOR 95% REVIEW |
| A | 2004 JULY 30 | ISSUED FOR 50% CLIENT REVIEW |

REVISIONS

Iqaluit
CITY of IQALUIT, Nunavut

Design: RJG
Drawn: NV
Approved
Chief
Director

Project Title
CITY OF IQALUIT WASTEWATER TREATMENT PLANT

Drawing Title
STRUCTURAL ENLARGED CLARIFIER FLOOR PLAN

Scale: AS NOTED
Project No.: 75360
Date

Drawing No.: S3-07
Revision: B